# ARCADIA HIGH SCHOOL
# LOCKER ROOM INTERIM HOUSING

180 CAMPUS DR., ARCADIA, CA, 91006

## ARCADIA UNIFIED SCHOOL DISTRICT

PROGRESS SET

ARCADIA
Unified School District
Imagine · Inquire · Inspire

VICINITY MAP

REGIONAL MAP

north


## tBP /Architecture

4611 Teller Avenue - Newport Beach - California - 92660
http://www.tbparchitecture.com
ph: 949.673.0300


tBP
Architecture
Planning
Interiors

A# 03 - 124890
DIVISION OF THE STATE ARCHITECT
355 S. GRAND AVE, SUITE 2100
LOS ANGELES, CA 90071
ph: 213.897.3995 fx: 213.897.3159/0726

agency

tBP
architecture
planning
interiors

LICENSED ARCHITECT
RICHARD L. GUERRA
STATE OF CALIFORNIA

tBP/Architecture
4611 Teller Avenue
Newport Beach, CA 92660
ph: 949.673.0300

architect

consultant

ARCADIA HIGH SCHOOL
LOCKER ROOM INTERIM HOUSING

ARCADIA UNIFIED SCHOOL DISTRICT
180 CAMPUS DRIVE
ARCADIA, CALIFORNIA 91006

owner

tBP project number : 21196.00

file name:

drawn by: checked by:

date: 11/18/2024

| Rev: | date: | description: |
|---|---|---|
| | | |
| | | |
| | | |
| | | |
| | | |
| | | |


THIS DRAWING AND THE DESIGNS, DEPICTIONS, IDEAS AND OTHER INFORMATION CONTAINED HEREIN CONSTITUTE UNPUBLISHED WORK OF tBP/ARCHITECTURE AND SHALL REMAIN THE PROPERTY OF tBP/ARCHITECTURE IN PERPETUITY. NO PART THEREOF SHALL BE REPRODUCED, DISCLOSED, DISTRIBUTED, SOLD, PUBLISHED OR OTHERWISE USED IN ANY WAY WITHOUT THE ADVANCED EXPRESS WRITTEN CONSENT OF tBP/ARCHITECTURE.


drawing title:
COVER SHEET

drawing no.:
T-1

# ABBREVIATIONS

| | |
|---|---|
| & | AND |
| ∡ | ANGLE |
| @ | AT |
| ℄ | CENTERLINE |
| Ø | DIAMETER OR ROUND |
| # | NUMBER |
| AB | ANCHOR BOLT |
| AC | ASPHALTIC CONCRETE |
| ACP | ACOUSTICAL PANEL |
| ACT | ACOUSTICAL TILE |
| ACOUS | ACOUSTICAL |
| AD | AREA DRAIN |
| ADH | ADHESIVE |
| ADJ | ADJACENT |
| AFF | ABOVE FINISH FLOOR |
| AFP | ACCORDIAN FOLDING PARTITION |
| AGGR | AGGREGATE |
| ALT | ALTERNATE |
| ALUM | ALUMINUM |
| AMP | AMPERE |
| ANOD | ANODIZED |
| APPROX | APPROXIMATELY |
| ARCH | ARCHITECT |
| ASB | ASBESTOS |
| ASSY | ASSEMBLY |
| BAT | BATTERY |
| BBD | BULLETIN BOARD |
| BD | BOARD |
| BLDG | BUILDING |
| BLKG | BLOCKING |
| BLO | BLOWER |
| BLR | BOILER |
| BLW | BELOW |
| BM | BEAM |
| BO | BOTTOM OF |
| BRKR | BREAKER |
| BTU | BRITISH THERMAL UNIT |
| BUR | BUILT UP ROOFING |
| CAB | CABINET |
| CARP | CARPET |
| CAT | CATALOG |
| CB | CATCH BASIN |
| CEM | CEMENT |
| CF | CURB FACE |
| CFM | CUBIC FEET PER MINUTE |
| CHBD | CHALKBOARD |
| CHEM | CHEMICAL |
| CHWR | CHILLED WATER RETURN |
| CHWS | CHILLED WATER SUPPLY |
| CI | CAST IRON |
| CIR | CIRCLE |
| CJ | CONTROL JOINT |
| CL | CENTERLINE |
| CLG | CEILING |
| CLO | CLOSET |
| CLRM | CLASSROOM |
| CMT | CERAMIC MOSAIC TILE |
| CMU | CONCRETE MASONRY UNIT |
| CND | CONDUIT |
| CO | CLEANOUT |
| COL | COLUMN |
| COMM | COMMUNICATION |
| COMP | COMPOSITION |
| CONC | CONCRETE |
| CONF | CONFERENCE |
| CONN | CONNECTION |
| CONT | CONTINUOUS |
| CONTR | CONTRACTOR |
| COORD | COORDINATE |
| CORR | CORRIDOR |
| COV | COVER |
| CP | CONTROL PANEL |
| CR | CONDENSATE RETURN |
| CSWK | CASEWORK |
| CT | CERAMIC TILE |
| CTSK | COUNTERSUNK |
| CTV | CABLE TELEVISION |
| CW | COLD WATER |
| DBL | DOUBLE |
| DEMO | DEMOLITION |
| DEPT | DEPARTMENT |
| DET | DETAIL |
| DF | DRINKING FOUNTAIN |
| DG | DECOMPOSED GRANITE |
| DIA | DIAMETER |
| DIM | DIMENSION |
| DISP. | DISPENSER |
| DIST. | DISTANCE |
| DIV. | DIVISION |
| D.L. | DEAD LOAD |
| DN. | DOWN |
| DS. | DOWN SPOUT |
| DWG. | DRAWING |

| | |
|---|---|
| (E) | EXISTING |
| EA. | EACH |
| E.J. | EXPANSION JOINT |
| ELEC. | ELECTRICAL |
| ELEV. | ELEVATION |
| EMER. | EMERGENCY |
| ENCL. | ENCLOSURE |
| ENG | ENGINEER |
| ENGY | ENERGY |
| ENTR | ENTRANCE |
| EP | EPOXY ENAMEL |
| EQ. | EQUAL |
| EQUIP. | EQUIPMENT |
| EST. | ESTIMATE |
| E.W.C. | ELECTRIC WATER COOLER |
| EWH | ELECTRIC WATER HEATER |
| EXH | EXHAUST |
| EXIST. | EXISTING |
| EXP. | EXPANSION |
| EXPSD. | EXPOSED |
| EXT. | EXTERIOR |
| F | FACTORY FINISH |
| F.A. | FIRE ALARM |
| FC | FOOTCANDLE |
| F.D. | FLOOR DRAIN |
| FDC | FIRE DEPARTMENT CONNECTION |
| FDN | FOUNDATION |
| F.E. | FIRE EXTINGUISHER |
| F.E.C. | FIRE EXTINGUISHER CABINET |
| F.F. | FINISH FLOOR |
| F.G. | FINISHED GRADE |
| F.H. | FIRE HYDRANT |
| FIN. | FINISH |
| F.L. | FLOW LINE |
| FLASH. | FLASHING |
| FLR. | FLOOR |
| FLUOR. | FLUORESCENT |
| F.O. | FACE OF |
| F.O.C. | FACE OF CONCRETE |
| F.O.F. | FACE OF FINISH |
| F.O.M. | FACE OF MASONRY |
| F.O.S. | FACE OF STUD |
| FPP | FOLDING PANEL PARTITION |
| FPW | FOLDING PANEL WOOD DOOR |
| F.R. | FIRE RETARDANT |
| F.R.A. | FIRE RATED ASSEMBLY |
| F.R.P. | FIBERGLASS REINFORCED PANEL |
| F.S. | FLOOR SINK |
| FT. | FOOT OR FEET |
| FTG. | FOOTING |
| FURR. | FURRING |
| FXTR | FIXTURE |
| G. | GAS |
| GA. | GAGE |
| GALV. | GALVANIZED |
| GB | GRAB BAR |
| G.I. | GALVANIZED IRON |
| GL. | GLASS |
| GLU.LAM. | GLUE LAMINATED |
| GND. | GROUND |
| GPM | GALLONS PER MINUTE |
| GR. | GRADE |
| GYP. | GYPSUM |
| H.B. | HOSE BIBB |
| HCN | HOLLOW CORE NATURAL FINISH |
| HCP | HOLLOW CORE PAINT FINISH |
| HDBD. | HARDBOARD |
| HDR | HEADER |
| HDW. | HARDWARE |
| HDWD. | HARDWOOD |
| HGT. | HEIGHT |
| H.M. | HOLLOW METAL |
| HORIZ. | HORIZONTAL |
| HP | HORSEPOWER |
| HR. | HOUR |
| HTG. | HEATING |
| HTWR | HOT WATER RETURN |
| HTWS | HOT WATER SUPPLY |
| HVAC | HEATING, VENTILATING, AIR CONDITIONING |
| HVY | HEAVY |
| HW | HOT WATER |
| I.D. | INSIDE DIAMETER |
| I.E. | INVERT ELEVATION |
| INSUL. | INSULATION |
| INT. | INTERIOR |
| INV. | INVERT |
| IW | IRRIGATION WATER |
| JAN. | JANITOR |
| JCT. | JUNCTION |
| JT. | JOINT |

| | |
|---|---|
| K | KIP (1000 LB) |
| KIT. | KITCHEN |
| KO | KNOCKOUT |
| KVA | KILOVOLT AMPERE |
| LAB. | LABORATORY |
| LAM. | LAMINATED |
| LAV. | LAVATORY |
| LB. | POUND |
| LDG | LANDING |
| LL | LIVE LOAD |
| LT | LIGHT |
| LTF | LINOLEUM TILE FLOORING |
| LTG | LIGHTING |
| LVL | LEVEL |
| LVR | LOUVER |
| MAINT | MAINTENANCE |
| MAN | MANUAL |
| MAS | MASONRY |
| MATL. | MATERIAL |
| MAX. | MAXIMUM |
| MCC | MOTOR CONTROL CENTER |
| MECH. | MECHANICAL |
| MED | MEDIUM |
| MEZZ | MEZZANINE |
| MFR. | MANUFACTURER |
| MH | MANHOLE |
| MIN. | MINIMUM |
| MIR | MIRROR |
| MISC. | MISCELLANEOUS |
| MKR | MARKER |
| MTL. | METAL |
| MTD. | MOUNTED |
| MUL. | MULLION |
| MVBL | MOVABLE |
| (N) | NEW |
| NAT. | NATURAL |
| NEG | NEGATIVE |
| N.I.C. | NOT IN CONTRACT |
| NO. | NUMBER |
| NOM. | NOMINAL |
| N.T.S. | NOT TO SCALE |
| O.A. | OVERALL |
| O.C. | ON CENTER |
| O.D. | OUTSIDE DIAMETER |
| O.F. | OVERFLOW DRAIN |
| OFCI | OWNER FURNISHED-CONTRACTOR INSTALLED |
| OFF | OFFICE |
| OFOI | OWNER FURNISHED-OWNER INSTALLED |
| OPNG. | OPENING |
| OPP. | OPPOSITE |
| OVHD | OVERHEAD |
| PART. | PARTITION |
| PB | PULL BOX |
| PBD | PARTICLEBOARD |
| PC | PORTLAND CEMENT |
| PD | PLANTER DRAIN |
| PERF | PERFORATED |
| PERP | PERPENDICULAR |
| PE | PAINT EGGSHELL |
| PF | PAINT FLAT |
| PG | PAINT GLOSS |
| P.H. | PANIC HARDWARE |
| PIV | POST INDICATOR VALVE |
| P.L. | PROPERTY LINE |
| PL. | PLATE |
| P.LAM. | PLASTIC LAMINATE |
| PLAS. | PLASTER |
| PLAT. | PLATFORM |
| PLBG | PLUMBING |
| PLF | POUNDS PER LINEAR FOOT |
| PLYWD. | PLYWOOD |
| PNL | PANEL |
| POS | POSITIVE |
| PR. | PAIR |
| PREFAB | PREFABRICATED |
| PREFIN | PREFINISHED |
| PRELIM | PRELIMINARY |
| PROJ | PROJECT |
| PSF | POUNDS PER SQUARE FOOT |
| PSG | PAINT SEMI-GLOSS |
| PSI | POUNDS PER SQUARE INCH |
| PVC | POLYVINYL CHLORIDE |
| Q.T. | QUARRY TILE |
| QTY | QUANTITY |

| | |
|---|---|
| R. | RISER |
| RAD. | RADIUS |
| R.D. | ROOF DRAIN |
| RDWD. | REDWOOD |
| REF. | REFERENCE |
| REFR. | REFRIGERATOR |
| REG. | REGISTER |
| REINF. | REINFORCING |
| REQD. | REQUIRED |
| RESIL. | RESILIENT |
| RET | RETURN |
| REV. | REVERSE |
| RFG | ROOFING |
| RM. | ROOM |
| R.O. | ROUGH OPENING |
| R.T.F. | RUBBER TILE FLOORING |
| S.B. | SPLASH BLOCK |
| S.C. | SOLID CORE |
| SCHED. | SCHEDULE |
| SCN | SOLID CORE NATURAL FINISH |
| SCP | SOLID CORE PAINT FINISH |
| SCPL | SOLID CORE P.LAM FINISH |
| S.D. | STORM DRAIN |
| SECT. | SECTION |
| SF | SQUARE FOOT |
| SHT. | SHEET |
| SIM. | SIMILAR |
| SLR | SEALER |
| SPEC. | SPECIFICATIONS |
| SPLY | SUPPLY |
| SQ. | SQUARE |
| S.SK. | SERVICE SINK |
| SST. | STAINLESS STEEL |
| ST | STREET |
| STAG | STAGGERED |
| STC | SOUND TRANSMISSION CLASS |
| STD. | STANDARD |
| STL. | STEEL |
| STN | STAIN FINISH |
| STOR | STORAGE |
| STRUCT. | STRUCTURAL |
| SURF | SURFACE |
| SUSP. | SUSPENDED |
| SV | SHEET VINYL |
| SWBD | SWITCHBOARD |
| SWGR | SWITCHGEAR |
| SWR | SEWER |
| SYM. | SYMBOL |
| SYS | SYSTEM |
| T. | TREAD |
| T. & B. | TOP AND BOTTOM |
| T. & G. | TONGUE AND GROOVE |
| T.C. | TOP OF CURB |
| TD | TRENCH DRAIN |
| TECH | TECHNICAL |
| TEL. | TELEPHONE |
| TEMP. | TEMPERATURE |
| T.G. | TOP OF GRATE |
| THK | THICK |
| THRES. | THRESHOLD |
| THRU | THROUGH |
| TKBD | TACKBOARD |
| T.O. | TOP OF |
| T.O.P. | TOP OF PARAPET |
| TOT | TOTAL |
| T.P. | TOP OF PAVING |
| TRNSF. | TRANSFORMER |
| TW | TOP OF WALL |
| TYP. | TYPICAL |
| UGND | UNDERGROUND |
| UNFIN. | UNFINISHED |
| U.N.O. | UNLESS NOTED OTHERWISE |
| U.O.S. | UNDERSIDE OF STRUCTURE |
| UR. | URINAL |
| UTIL | UTILITY |
| V | VOLT |
| VAC | VACUUM |
| VAV | VARIABLE AIR VOLUME |
| V.C.T. | VINYL COMPOSITION TILE |
| VERT. | VERTICAL |
| VEST. | VESTIBULE |
| VFWC | VINYL FABRIC WALL COVERING |
| W | WATT |
| W/ | WITH |
| W.C. | WATER CLOSET |
| WD. | WOOD |
| WDW. | WINDOW |
| WHSE | WAREHOUSE |
| WL | WIND LOAD |
| WLD | WELDED |
| WP | WORKING POINT |
| WPG | WATERPROOFING |
| WR | WATER RESISTANT |
| WSCT. | WAINSCOT |
| WT | WEIGHT |
| W.W.F. | WELDED WIRE FABRIC |
| XFMR | TRANSFORMER |

# REFERENCE SYMBOLS

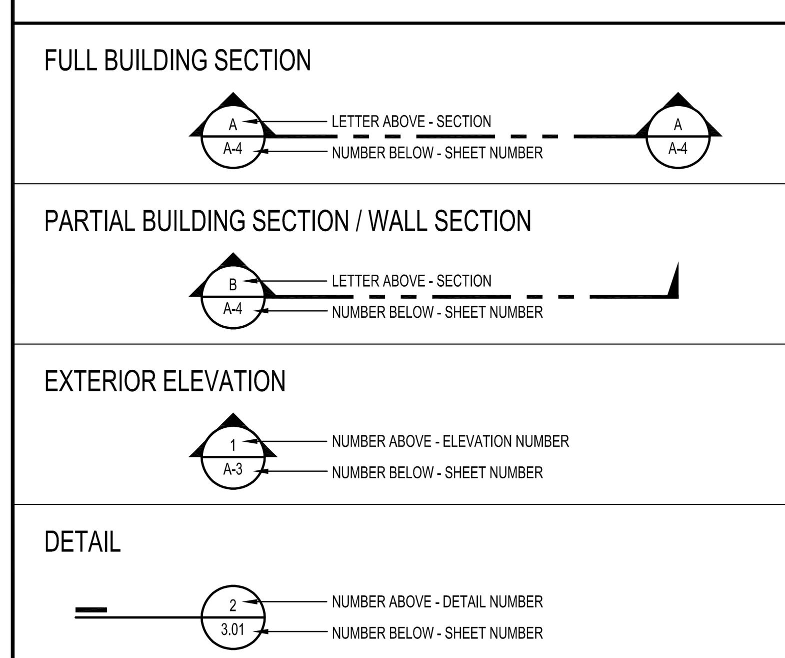


# MATERIAL SYMBOLS

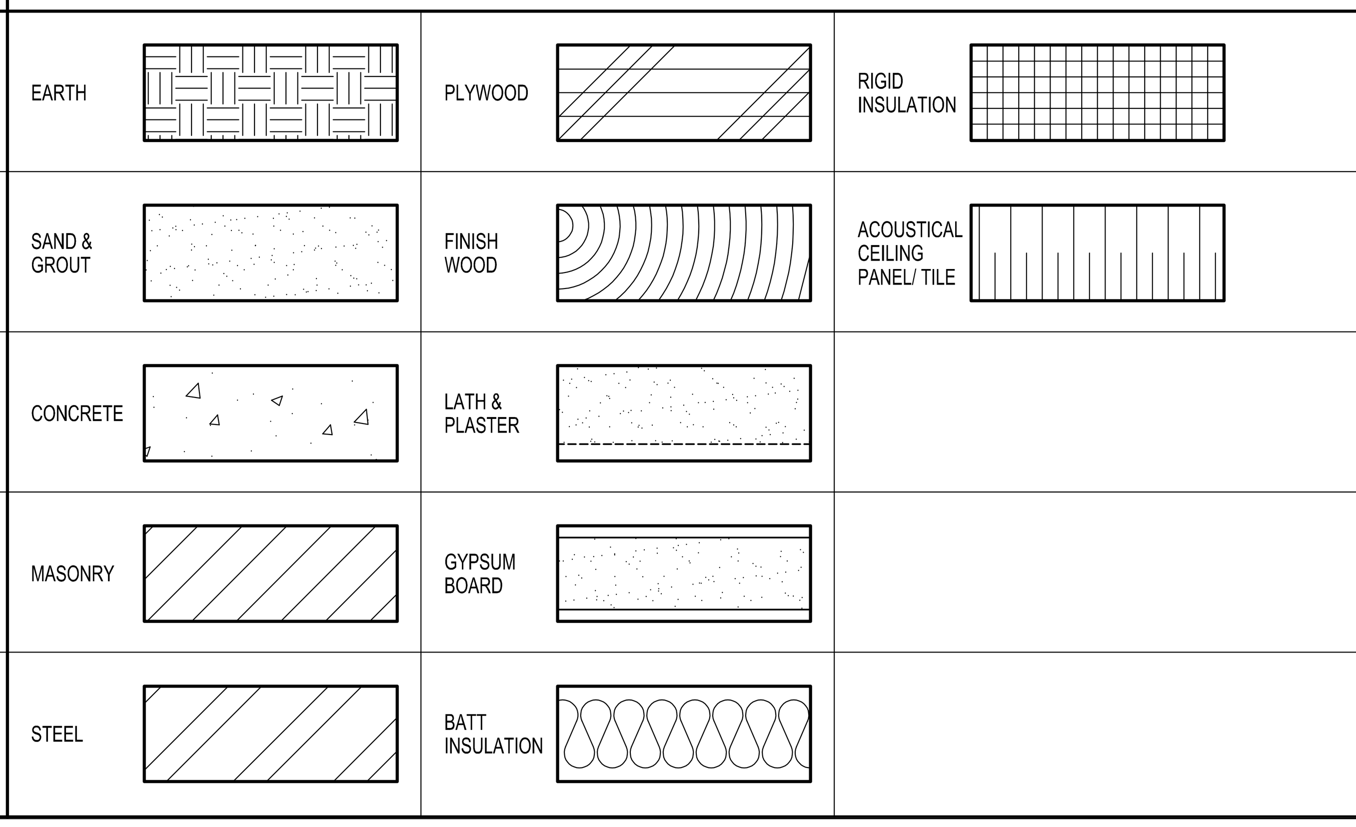


# SHEET INDEX

(TOTAL NO. OF DRAWINGS - 81)

## GENERAL
(NO. OF DRAWINGS - 4)

T-1 COVER SHEET
T-2 SHT. INDEX, GEN. NOTES, & CODE ANALYSIS
T-3 FIRE ACCESS SITE PLAN
T-4 CODE ANALYSIS

## CIVIL *
(NO. OF DRAWINGS - 3)

C1.00 SITE DEMOLITION PLAN
C2.00 GRADING PLAN PHASE 1
C2.01 GRADING PLAN PHASE 2

## ARCHITECTURAL
(NO. OF DRAWINGS - 4)

AS-1 OVERALL SITE PLAN
AS-2 ENLARGED SITE PLAN
AS-3 RAMP PLAN
2.01 SITE DETAILS

## ELECTRICAL *
(NO. OF DRAWINGS - 9)

E0-1 SYMBOL LIST, GENERAL NOTES AND DETAILS
E0-2 SINGLE LINE DIAGRAM AND DETAILS
E0-3 ELECTRICAL DETAILS
E-1.0 OVERALL SITE ELECTRICAL PLAN
E-1.1 ENLARGED SITE POWER PLAN
E-1.2 ENLARGED SITE TELECOM PLAN
E-2.0 FIRE ALARM SYSTEM INFORMATION
E-2.1 OVERALL SITE FIRE ALARM PLAN
E-2.2 ENLARGED FIRE ALARM PLAN

## PC RELOCATABLE CLASSROOM *
(NO. OF DRAWINGS - 52)

STOCKPILE A# 04-124098
S/N: 24-133-A/B, 24-134-A/B, 24-135-A/B, 24-138-A/B, 24-139-A/B, 24-140-A/B
A0.0 TITLE SHEET
A0.1 SPECIFICATIONS AND NOTES
A0.2 CONSTRUCTION MATERIALS AND SPECIFICATIONS
A0.3 FINISH SCHEDULE
A0.4 SIGNAGE SPECIFICATIONS AND DETAILS
A0.6 CAL GREEN REQUIREMENTS
A0.8a SAMPLE DSA 103 FORM WOOD FOUNDATION OR BUILDING STOCKPILE PROJECT
A0.9 CAL GREEN MANDATORY MEASURES
A0.10 CONSTRUCTION WASTE MANAGEMENT FORMS
A1.1 FLOOR PLAN 24' X 40'
A2.0a REFLECTED CEILING DETAILS
A2.0b REFLECTED CEILING DSA NOTES
A2.1 REFLECTED CEILING PLAN 24' X 40'
A3.5 ROOF DETAILS-TPO
A3.6 ROOF PLAN MONO & DUAL SLOPE-TPA
A4.1 INTERIOR ELEVATIONS 24' X 40'
A5.1-A EXTERIOR ELEVATIONS 24' X 20'-WOOD SIDING OPTION 'A' (RIGHT HAND)
A5.1-B EXTERIOR ELEVATIONS 24' X 20'-WOOD SIDING OPTION 'B' (LEFT HAND)
A8.0 ARCHITECTURAL DETAILS WOOD STUD OPTION
A8.1 ARCHITECTURAL DETAILS
A8.2 SHEET METAL AND FLASHING DETAILS
A13.0 ARCHITECTURAL BUILDING SECTIONS - MONO SLOPE

F1.1 WOOD FOUNDATION PLAN 24 X 40
F1.8 WOOD PAD FOUNDATION DETAILS

S0.0a STRUCTURAL NOTES AND SPECIFICATIONS
S0.0b STRUCTURAL NOTES AND SPECIFICATIONS
S0.1 STRUCTURAL BUILDING SECTIONS - PLYWOOD FLOOR
S0.3 TYPICAL STRUCTURAL DETAILS
S1.0 FLOOR FRAMING DETAILS - PLYWOOD & CONCRETE
S1.1 FLOOR FRAMING PLAN - PLYWOOD
S2.0 ROOF FRAMING DETAILS
S2.1 ROOF TRUSS AND DETAILS
S2.2 ROOF FRAMING PLAN - PLYWOOD SHEATHING DIAPHRAGM
S3.0 WALL FRAMING DETAILS - WOOD STUD
S3.2 WALL FRAMING ELEVATIONS
S4.0 ALLOWABLE BEAM AN DHEADER PENETRATION

M0.0 MECHANICAL SCHEDULES AND NOTES
M0.1 MECHANICAL DETAILS
M1.1 MECHANICAL PLAN WALL MOUNT 24' X 40'
M3.0 PC TITLE 24 REPORT WORST CASE SCENARIO (PERFORMANCE RUN)
M3.1 PC TITLE 24 REPORT WORST CASE SCENARIO (PERFORMANCE RUN)
M3.2 PC TITLE 24 REPORT WORST CASE SCENARIO (PERFORMANCE RUN)
M3.3 PC TITLE 24 REPORT WORST CASE SCENARIO (PERFORMANCE RUN)
M3.4 PC TITLE 24 REPORT PERFORMANCE RUN TABLES
M5.0 PC HVAC VARIATION CHART

E0.0 ELECTRICAL DETAILS
E1.0 ELECTRICAL PLAN 24' X 40' (WALL MOUNTED HVAC)
E4.0DL SKYLIT & SIDELIT DAYLIT ZONE FLOOR PLANS 24'-48' X 40'
E6.0 ELECTRICAL LIGHTING CONTROL & SEQUENCE OF OPERATION
E7.0 PC TITLE 24 REPORT WORST CASE SCENARIO CEC FORMS
E7.1 PC TITLE 24 REPORT WORST CASE SCENARIO CEC FORMS
E7.2 PC TITLE 24 REPORT WORST CASE SCENARIO CEC FORMS

## PC ACCESSIBLE RAMP *
(NO. OF DRAWINGS - 9)

DSA A#: 04-122029
R-1 COVER SHEET
R-2 DSA 103 TEST & SPECIAL INSPECTIONS SAMPLE
R-3 CONSTRUCTION SPECIFICATIONS & NOTES
R-4 STANDARD RAMP & LANDING (ATTACHED HANDRAIL TO BUILDING)
R-5 OFFSET RAMP & LANDING (FREE STANDING HANDRAILS)
R-6 COMMON LANDING & RAMP
R-7 STAIR & LANDING DETAILS
R-8 SWITCHBACK RAMP & LANDING
R-9 RAMP & LANDING DETAILS

# Statement of General Conformance

**(Application No.** 03-124890 **File No.** 19-H32 **)**

☒ The drawings or sheets listed on the cover or index sheet [marked by asterisk (*) ]
☐ This drawing, page of specifications/calculations

have been prepared by other design professionals or consultants who are licensed and/or authorized to prepare such drawings in this state. It has been examined by me for:

1) design intent and appears to meet the appropriate requirements of Title 24, California Code of Regulations and the project specifications prepared by me, and

2) coordination with my plans and specifications and is acceptable for incorporation into the construction of this project.

This Statement of General Conformance "shall not be construed as relieving me of my rights, duties, and responsibilities under Sections 17302 and 81138 of the Education Code and Sections 4-336, 4-341 and 4-344" of Title 24, Part 1. (Title 24, Part 1, Section 4-317 (b))

I find that: ☒ All drawings or sheets listed on the cover or index sheet
☐ This drawing or page

☒ is/are in general conformance with the project design, and
☒ has/have been coordinated with the project plans and specifications.

☐ is/are in general conformance with the project design intent, and
☐ has/have been coordinated with the project plans and specifications.

Signature: [signed] Date: 2.28.2025
Architect or Engineer designated to be in general responsible charge
Print Name: HUNG L. CHENG
License Number: C 34187 Expiration Date:

Signature: Date:
Architect or Engineer delegated responsibility for this portion of the work
Print Name:
License Number: Expiration Date:

# APPLICABLE CODES

APPLICABLE CODES AS OF JANUARY 1, 2024:

2022 CALIFORNIA ADMINISTRATIVE CODE (CAC), PART 1, TITLE 24 CCR*
2022 CALIFORNIA BUILDING CODE (CBC), PART 2, TITLE 24 CCR
2022 CALIFORNIA ELECTRICAL CODE (CEC), PART 3, TITLE 24 CCR
2022 CALIFORNIA MECHANICAL CODE (CMC), PART 4, TITLE 24 CCR
2022 CALIFORNIA PLUMBING CODE (CPC), PART 5, TITLE 24 CCR
2022 CALIFORNIA ENERGY CODE (CEC), PART 6, TITLE 24 CCR
2022 CALIFORNIA FIRE CODE (CFC), PART 9, TITLE 24 CCR
2022 CALIFORNIA EXISTING BUILDING CODE (CEBC), PART 10, TITLE 24 CCR
2022 CALIFORNIA GREEN BUILDING STANDARDS CODE (CALGREEN), PART 11, TITLE 24 CCR
2022 CALIFORNIA REFERENCED STANDARDS CODE, PART 12, TITLE 24 CCR
TITLE 19 CCR, PUBLIC SAFETY, STATE FIRE MARSHAL REGULATIONS
2016 ASME A17.1/CSA B44-16 SAFETY CODE FOR ELEVATORS AND ESCALATORS (PER 2022 CBC PART 2 CH 35)
*NOTE: CAL/OSHA ELEVATOR UNIT ENFORCES CCR TITLE 8 AND USES THE 2004 ASME A17.1 BY ADOPTION.*

PARTIAL LIST OF APPLICABLE STANDARDS

| | | |
|---|---|---|
| NFPA 13 (CA AMENDED) | STANDARD FOR THE INSTALLATION OF SPRINKLER SYSTEMS | 2022 EDITION |
| NFPA 14 | STANDARD FOR THE INSTALLATION OF STANDPIPE AND HOSE SYSTEMS (CA AMENDED) | 2019 EDITION |
| NFPA 17 | STANDARD FOR DRY CHEMICAL EXTINGUISHING SYSTEMS | 2021 EDITION |
| NFPA 17A | STANDARD FOR WET CHEMICAL EXTINGUISHING SYSTEMS | 2021 EDITION |
| NFPA 20 | STANDARD FOR INSTALLATION OF STATIONARY PUMPS FOR FIRE PROTECTION | 2019 EDITION |
| NFPA 22 | STANDARD FOR WATER TANKS FOR PRIVATE FIRE PROTECTION | 2023 EDITION |
| NFPA 24 | STANDARD FOR THE INSTALLATION OF PRIVATE FIRE SERVICE MAINS AND THEIR APPURTENANCES (CA AMENDED) | 2022 EDITION |
| NFPA 72 | NATIONAL FIRE ALARM AND SIGNALING CODE (CA AMENDED) | 2022 EDITION |
| NFPA 80 | STANDARD FOR FIRE DOOR AND OTHER OPENING PROTECTIVES | 2019 EDITION |
| NFPA 2001 | STANDARD ON CLEAN AGENT FIRE EXTINGUISHING SYSTEMS (CA AMENDED) | 2018 EDITION |
| UL 300 | STANDARD FOR FIRE TESTING OF FIRE EXTINGUISHING SYSTEMS FOR PROTECTION OF COMMERCIAL COOKING EQUIPMENT | 2005 (R2010) |
| UL 464 | AUDIBLE SIGNALING DEVICES FOR FIRE ALARM AND SIGNALING SYSTEMS, INCLUDING ACCESSORIES | 2003 EDITION |
| UL 521 | STANDARD FOR HEAT DETECTORS FOR FIRE PROTECTIVE SIGNALING SYSTEMS | 1999 EDITION |
| UL 1971 | STANDARD FOR SIGNALING DEVICES FOR THE HEARING IMPAIRED | 2018 EDITION |

*FOR A COMPLETE LIST OF APPLICABLE NFPA STANDARDS REFER TO 2022 CBC (SFM) CHAPTER 35 AND CALIFORNIA FIRE CODE (CFC) CHAPTER 80.*

*SEE CALIFORNIA BUILDING CODE, CHAPTER 35, FOR STATE OF CALIFORNIA AMENDMENTS TO THE NFPA STANDARDS.*

# SUMMARY OF WORK

THE PROJECT CONSISTS OF THE RELOCATION OF (6) RELOCATABLE BUILDINGS OF 960 SF EACH, AS COMPLETE BUILDINGS FROM STOCKPILE A#04-124098 S/N: 24-133-A/B, 24-134-A/B, 24-135-A/B, 24-138-A/B, 24-139-A/B, 24-140-A/B, CONSTRUCTION OF (6) RAMPS PER PC A# 04-122029 & ASSOCIATED SITE WORK

# PROJECT DIRECTORY


**OWNER**
ARCADIA UNIFIED SCHOOL DISTRICT
150 SOUTH 3RD AVENUE
ARCADIA, CA 91006
PHONE: (626) 821-8300

**CIVIL**
FPL AND ASSOCIATES
30 CORPORATE PARK, SUITE 401
IRVINE, CA 92606
PHONE: (949) 252-1688

**ARCHITECT**
tBP/ARCHITECTURE
4611 TELLER AVENUE
NEWPORT BEACH, CA 92660
PHONE : (949) 673-0300

**ELECTRICAL**
FBA ENGINEERING
150 PAULARINO AVENUE, SUITE A120
COSTA MESA, CA 92626
PHONE: (949) 852-9995


# GENERAL NOTES

ALL WORK TO CONFORM TO 2022 EDITION TITLE 24, CALIFORNIA CODE OF REGULATIONS (CCR)

FABRICATION AND INSTALLATION OF DEFERRED SUBMITTAL ITEMS SHALL NOT BE STARTED UNTIL CONTRACTOR'S DRAWINGS, SPECIFICATIONS, AND ENGINEERING CALCULATIONS FOR THE ACTUAL SYSTEMS TO BE INSTALLED HAVE BEEN ACCEPTED AND SIGNED BY THE ARCHITECT OR STRUCTURAL ENGINEER AND APPROVED BY DSA.

CHANGES TO THE APPROVED DRAWINGS AND SPECIFICATIONS SHALL BE MADE BY AN ADDENDUM OR A CONSTRUCTION CHANGED DOCUMENT (CCD) APPROVED BY THE DIVISION OF THE STATE ARCHITECT, AS REQUIRED BY SECTION 4-338, PART 1, TITLE 24, CCR.

A "DSA CERTIFIED" PROJECT INSPECTOR EMPLOYED BY THE DISTRICT (OWNER) AND APPROVED BY THE DSA SHALL PROVIDE CONTINUOUS INSPECTION OF THE WORK. THE DUTIES OF THE INSPECTOR ARE DEFINED IN SECTION 4-342, PART 1, TITLE 24, CCR.

A 'DSA CERTIFIED' INSPECTOR WITH CLASS (2) CERTIFICATION IS REQUIRED FOR THIS PROJECT

A DSA ACCEPTED TESTING LABORATORY DIRECTLY EMPLOYED BY THE SCHOOL BOARD SHALL CONDUCT ALL THE REQUIRED TESTS AND INSPECTIONS FOR THE PROJECT.

DRINKING WATER WELL SHALL COMPLY WITH ALL LOCAL HEALTH DEPARTMENT REQUIREMENTS.

GRADING PLANS, DRAINAGE IMPROVEMENTS, ROAD AND ACCESS REQUIREMENTS AND ENVIRONMENTAL HEALTH CONSIDERATIONS SHALL COMPLY WITH ALL LOCAL ORDINANCES.

COPY OF TITLE 24 PART 1 THROUGH 5 SHALL BE KEPT ON CONSTRUCTION SITE.

THE INTENT OF THESE DRAWINGS AND SPECIFICATIONS IS THAT THE WORK OF THE ALTERATION, REHABILITATION OR RECONSTRUCTION IS TO BE IN ACCORDANCE WITH TITLE 24, CCR. SHOULD ANY EXISTING CONDITIONS SUCH AS DETERIORATION OR NON-COMPLYING CONSTRUCTION BE DISCOVERED WHICH IS NOT COVERED BY THE CONTRACT DOCUMENTS WHEREIN THE FINISHED WORK WILL NOT COMPLY WITH TITLE 24, CCR, A CONSTRUCTION CHANGE DOCUMENT (CCD), OR A SEPARATE SET OF PLANS AND SPECIFICATIONS, DETAILING AND SPECIFYING THE REQUIRED WORK SHALL BE SUBMITTED TO AND APPROVED BY DSA BEFORE PROCEEDING WITH THE WORK. (SECTION 4-317(C), PART 1, TITLE 24, CCR)

WORK SHALL COMPLY WITH THE PROVISIONS OF CHAPTER 33 OF CBC & CFC, 2022 EDITION 'FIRE SAFETY DURING CONSTRUCTION AND DEMOLITION'.

ALL SADDLES, CLAMPS AND FITTINGS SHALL CONFORM TO THE GUIDELINES AS SPECIFIED IN APPENDICES "A, B, & C" RESPECTIVELY IN ASCE 19-16, "STRUCTURAL APPLICATIONS OF STEEL CABLES FOR BUILDINGS".

SUBSTITUTIONS AFFECTING ITEMS REGULATED BY THE DIVISION OF THE STATE ARCHITECT (DSA) REQUIRE DSA APPROVAL AS AN ADDENDUM OR A CONSTRUCTION CHANGE DOCUMENT (CCD). DSA APPROVAL SHALL BE OBTAINED PRIOR TO FABRICATION AND/OR INSTALLATION PER SECTION 4.338, PART 1, TITLE 24, CCR.

# DEFERRED SUBMITTALS

FABRICATION AND INSTALLATION OF DEFERRED SUBMITTAL ITEMS SHALL NOT BE STARTED UNTIL CONTRACTOR'S DRAWINGS, SPECIFICATIONS, AND ENGINEERING CALCULATIONS FOR THE ACTUAL SYSTEMS TO BE INSTALLED HAVE BEEN ACCEPTED AND SIGNED BY THE ARCHITECT OR STRUCTURAL ENGINEER AND APPROVED BY THE DSA. LIST DEFERRED SUBMITTAL ITEMS FOR THIS PROJECT:

- NONE

# DESIGN CRITERIA

BASIC DESIGN WIND SPEED: 95 VMPH

RISK CATEGORY II

SEISMIC DESIGN CRITERIA
$S_S$ = 2.2
$S_1$ = 0.74
$F_a$ = 1.2
$S_{MS}$ = 2.35
$S_{DS}$ = 1.56
SITE CLASS D DEFAULT

DESIGN ALLOWABLE SOIL BEARING PRESSURE: 1000 PSF


A# 03 - 124890
DIVISION OF THE STATE ARCHITECT
355 S. GRAND AVE, SUITE 2100
LOS ANGELES, CA 90071
ph: 213.897.3995 fx: 213.897.3159/0726
agency

tBP architecture planning interiors

LICENSED ARCHITECT
HUNG L. CHENG
NO. C34187
REN. 4-30-25
STATE OF CALIFORNIA

tBP/Architecture
4611 Teller Avenue
Newport Beach, CA 92660
ph: 949.673.0300
architect


consultant

ARCADIA HIGH SCHOOL
LOCKER ROOM INTERIM HOUSING

ARCADIA UNIFIED SCHOOL DISTRICT
180 CAMPUS DRIVE
ARCADIA, CALIFORNIA 91006

owner

tBP project number : 21196.00
file name:
drawn by: checked by:
date: 11/18/2024
Rev: date: description:


THIS DRAWING AND THE DESIGNS, DEPICTIONS, IDEAS AND OTHER INFORMATION CONTAINED HEREIN CONSTITUTE UNPUBLISHED WORK OF tBP/ARCHITECTURE AND SHALL REMAIN THE PROPERTY OF tBP/ARCHITECTURE IN PERPETUITY. NO PART THEREOF SHALL BE REPRODUCED, DISCLOSED, DISTRIBUTED, SOLD, PUBLISHED OR OTHERWISE USED IN ANY WAY WITHOUT THE ADVANCED EXPRESS WRITTEN CONSENT OF tBP/ARCHITECTURE.


drawing title:
SHT. INDEX, GEN. NOTES, & CODE ANALYSIS

drawing no.:
T-2

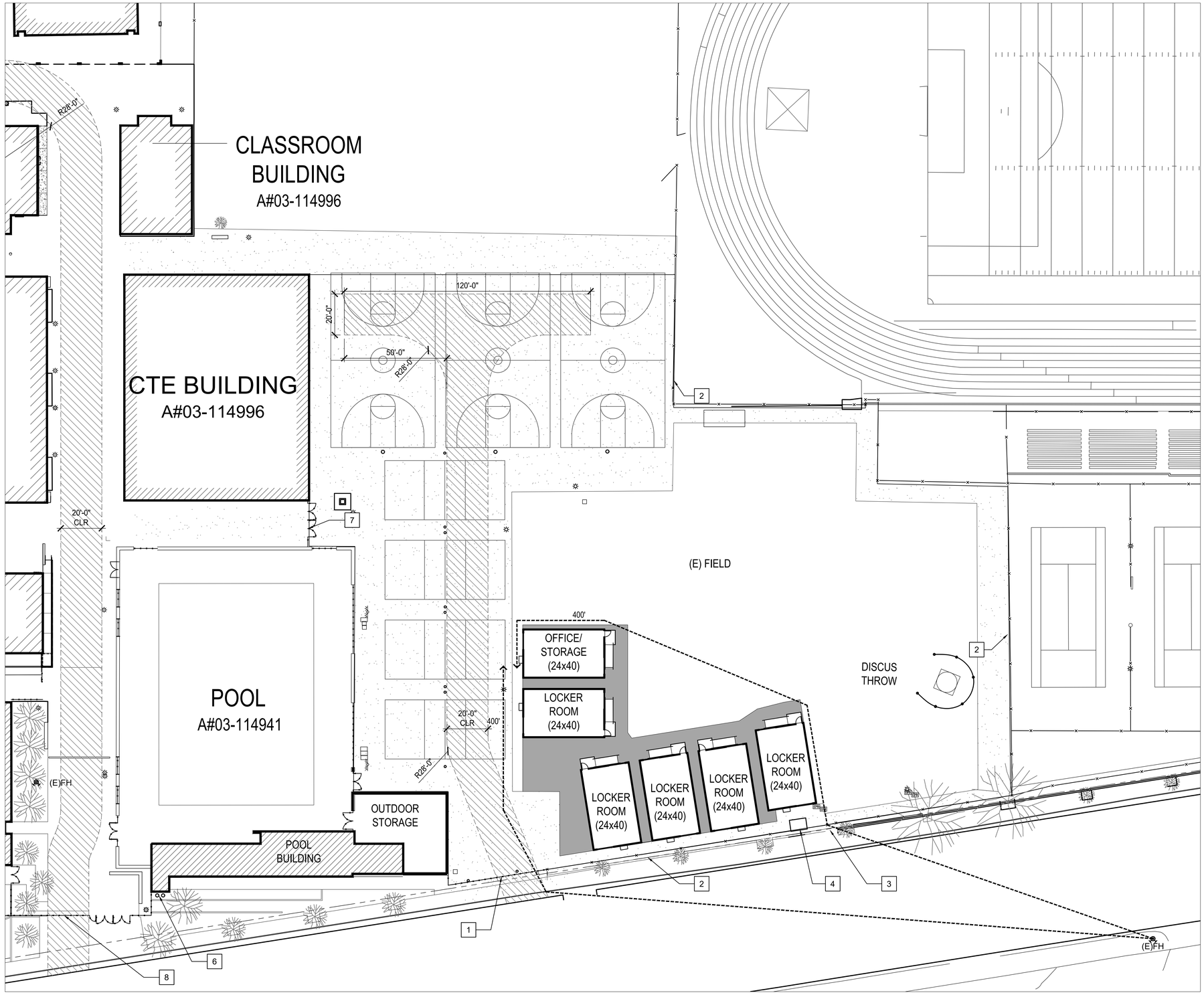


FIRE ACCESS SITE PLAN 1
SCALE: 1" = 20'-0"

## KEYPLAN

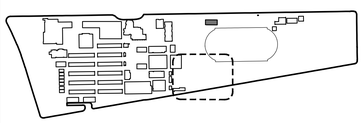

## FIRE DEPARTMENT NOTES

FIRE APPARATUS ACCESS ROADS AND WATER SUPPLY FOR FIRE PROTECTION SHALL BE INSTALLED AND MADE SERVICEABLE PRIOR TO AND DURING THE TIME OF CONSTRUCTION EXCEPT WHEN APPROVED ALTERNATE METHODS OF PROTECTION ARE PROVIDED.
(SEE CFC SECTION 501.4)
KNOX BOX - THE MOUNTING HEIGHT FOR THE KNOX BOX SHALL NOT EXCEED 6'-0" ABOVE THE GROUND LEVEL / FINISHED FLOOR. PROVIDE (3) SETS OF KEYS (WITH PERMANENT ENGRAVED IDENTIFICATION) FOR ALL EXTERIOR DOORS, GATES AND FIRE ALARM PANELS AND OTHERS AS DIRECTED BY THE FIRE INSPECTOR.

## LEGEND

- EXISTING FIRE DEPARTMENT VEHICULAR ACCESS LANE 20'-0" MINIMUM UNOBSTRUCTED WIDTH A#03-114941
- PROPERTY LINE
- (N) DECOMPOSED GRANITE
- (E) CONCRETE PAVING
- 150' — 150' MAX REACH FIRE HOSE 5'-0" MINIMUM CLEAR WIDTH
- (E) FH — EXISTING FIRE HYDRANT

## KEYNOTES

1. (E) 24' WIDE ROLLING STEEL GATE WITH KNOX BOX, A#03-114941
2. (E) CHAIN LINK FENCING
3. PROVIDE (N) KNOX BOX ON (E) CHAIN LINK GATE
4. (E) TICKET BOOTH
5. (E) STEEL FENCE & GATE , A#03-114941
6. (E) POST INDICATOR VALVE & FIRE DEPARTMENT CONNECTION, PER A#03-114941
7. (E) 16' PEDESTRIAN GATE, A#03-114941
8. (E) 24' WIDE ROLLING STEEL GATE WITH KNOX BOX, A#03-114941

## BUILDING INFORMATION

| | | ALLOWABLE | ACTUAL |
|---|---|---|---|
| OCCUPANCY GROUPS: | B, E, S (USE MOST RESTRICTIVE) | | |
| CONSTRUCTION TYPE: | TYPE V-B, NON-SPRINKLERED | | |
| TOTAL BUILDING AREA (PER TABLE 506.2): | | 9,500SF | 5,760 S.F |
| BUILDING HEIGHT (PER TABLE 504.3): | | 40'-0" | 12'-0" |
| STORIES ABOVE GRADE (PER TABLE 504.4): | | 1 | 1 |

## FIRE FLOW ANALYSIS

2022 CALIFORNIA FIRE CODE TABLE BB105.1 - MIN. REQUIRED FIRE FLOW AND FLOW DURATION FOR BUILDINGS

| PORTABLE BUILDINGS | FIRE AREA TYPE V-B | FIRE FLOW @ 20 PSI (GPM) | FLOW DURATION (HOURS) | REQUIRED FIRE FLOW @ 20 PSI |
|---|---|---|---|---|
| | 5,760 S.F. | >4,500 GPM | 2 HOUR | 2,000 GPM |

**DSA** **810**

### FIRE & LIFE SAFETY SITE CONDITIONS SUBMITTAL

Division of the State Architect (DSA) documents referenced within this publication are available on the DSA Forms or DSA Publications webpages.

To facilitate the Division of the State Architect's (DSA) fire and life safety plan review of project site conditions, DSA requires the design professional to provide the following information at time of project submittal for projects consisting of construction of a new campus, construction of new building(s), additions to existing buildings, and for site alternate design means for fire department emergency vehicle access, and fire suppression water supply.

Information associated with compliance items 1 through 3 below is to be provided for all project types indicated above. Information associated with items 4 through 7 is to be completed when an alternate means is utilized. Acknowledgement by the school district and signature from the Local Fire Authority (LFA) is only required when an alternate design means is being requested.

The Project Information and Fire & Life Safety Information sections are to be completed for all projects and imaged onto the fire access site plan. When an alternate design/means is proposed, all sections on pages 1 and 2 are to be completed and imaged on the fire access site plan.

For additional information refer to the instructions at the end of this form and DSA Policy *PL 09-01: Fire Flow for Buildings*.

| PROJECT INFORMATION |
|---|
| School District/Owner: |
| Project Name/School: |
| Project Address: |

| FIRE & LIFE SAFETY INFORMATION | | | | |
|---|---|---|---|---|
| 1. | Has a fire hydrant flow test been performed within the past 12 months? *(If yes, provide a copy of the test data.)* | Yes ☐ | | No ☐ |
| 2. | Was the fire hydrant water flow test performed as part of this LFA review? | Yes ☐ | | No ☐ |
| 3. | Is the project located within a designated fire hazard severity zone (FHSZ) as established by Cal-Fire? *(If yes, indicate FHSZ classification below.)* | Yes ☐ | | No ☐ |
| | Refer to the following website for FHSZ locations: http://egis.fire.ca.gov/FHSZ/ | Moderate ☐ | High ☐ | Very High ☐ |
| | Wildland Interface Area (WIFA) *(If any designations are checked, project design must meet the requirements of CBC Chapter 7A.)* | | | WIFA ☐ |



DSA 810
**FIRE & LIFE SAFETY SITE CONDITIONS SUBMITTAL**

| CONDITION MEANS AND METHODS RESOLUTION | | ALTERNATE ACCEPTED Yes | No | N/A | N/R |
|---|---|---|---|---|---|
| 4. | Emergency vehicle access roadways do not meet CFC requirements. | | | | |
| 4a. | **Acceptable Alternate:** Emergency vehicle and personnel access as proposed by the project architect is acceptable for providing fire suppression and protection of life and property. | | | | |
| 5. | **Fire Hydrants:** Number and spacing does not meet CFC requirements. | | | | |
| 5a. | **Acceptable Alternate:** Number of fire hydrants and spacing as proposed by the project architect is acceptable for fire suppression and protection of life and property. | | | | |
| 6. | **Fire Hydrants:** Water flow and pressure are less than CFC minimum. | | | | |
| 6a. | **Acceptable Alternate:** The available flow and pressure is acceptable for providing fire suppression and protection of life and property. | | | | |
| 7. | Location of fire department connection(s) serving fire sprinkler systems or standpipe systems does not meet CFC requirements. | | | | |
| 7a. | **Acceptable Alternate:** The location of fire department connection serving the fire sprinkler system and/or standpipe system is acceptable for providing fire suppression and protection of life and property. | | | | |

**School District Acceptance of Acceptable Design Alternates**

By signing this form, the school district acknowledges and accepts the proposed design as an alternative to California Building Code (CBC) and California Fire Code (CFC) minimum requirements, as indicated by one or more of the conditions indicated at items 4a, 5a, 6a or 7a, for providing fire and life safety protection of life and property.

Accepted by: _____ Title: _____

Signature: _____ Date: _____

| LOCAL FIRE AUTHORITY (LFA) INFORMATION | |
|---|---|
| LFA Agency Name: Arcadia Fire Department | |
| LFA Review Official: Mark Krikorian | |
| Title: Fire Marshal | Work Phone: 626-574-5106 |
| Work Email: mkrikorian@arcadiaca.gov | |

LFA Reviewer's Signature: _____ Date: 11/5/24



agency
A# 03 -
DIVISION OF THE STATE ARCHITECT
355 S. GRAND AVE, SUITE 2100
LOS ANGELES, CA 90071
ph: 213.897.3995 fx: 213.897.3159/0726

architecture
planning
interiors

LICENSED ARCHITECT
RICHARD L. LIBERA
No. C14167
Exp. 4-30-25
STATE OF CALIFORNIA

architect
IBP/Architecture
4611 Teller Avenue
Newport Beach, CA 92660
ph: 949.673.0300

consultant

# ARCADIA HIGH SCHOOL LOCKER ROOM INTERIM HOUSING

ARCADIA UNIFIED SCHOOL DISTRICT
180 CAMPUS DRIVE
ARCADIA, CALIFORNIA 91006

owner

IBP project number : 21196.00

file name:

drawn by: checked by:

date: 07/02/2024

| Rev: | date: | description: |
|---|---|---|
| | | |

THIS DRAWING AND THE DESIGNS, DEPICTIONS, IDEAS AND OTHER INFORMATION CONTAINED HEREIN CONSTITUTE UNPUBLISHED WORK OF IBP/ARCHITECTURE AND SHALL REMAIN THE PROPERTY OF IBP/ARCHITECTURE IN PERPETUITY. NO PART THEREOF SHALL BE REPRODUCED, DISCLOSED, DISTRIBUTED, SOLD, PUBLISHED OR OTHERWISE USED IN ANY WAY WITHOUT THE ADVANCED EXPRESS WRITTEN CONSENT OF IBP/ARCHITECTURE.

drawing title:
FIRE ACCESS SITE PLAN

drawing no.:
T-3

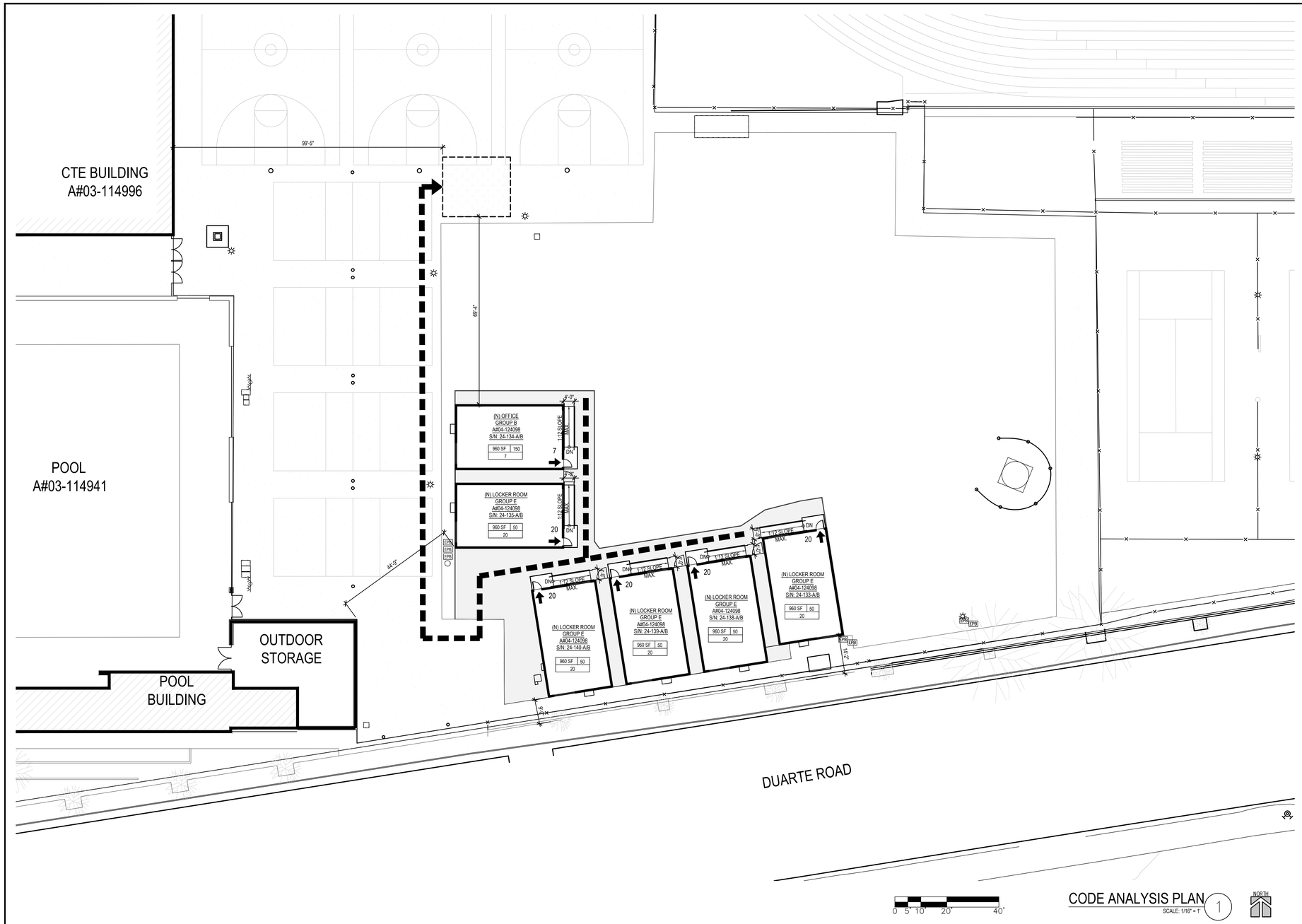


## CODE ANALYSIS PLAN 1

SCALE: 1/16" = 1'

## EXEMPTION FROM PV AND BATTERY STORAGE SYSTEMS

EACH 24'X40' MODULAR BUILDING IS A SEISMICALLY SEPARATED STRUCTURE AND IS BEING ANALYZED AS AN INDEPENDENT BUILDING.

THE REQUIRED PRESCRIPTIVE PV SYSTEM FOR A 24'X40' (960 SF) IN THE PROJECT CLIMATE ZONE (CZ 6) IS 1.6 kW. PER ENERGY CODE SECTION 140.10(a)M EXCEPTION 2: NO PV SYSTEM IS REQUIRED WHERE THE REQUIRED SYSTEM IS LESS THAN 4 kW.

PER 2022 ENERGY CODE SECTION 140.10(b), EXCEPTION 3: NO BATTERY STORAGE SYSTEM IS REQUIRED IN BUILDINGS WITH LESS THAN 5,000 SF.

FOR MORE INFORMATION SEE ENERGY CALCULATIONS ON MODULAR BUILDING SHEETS A-0.51N, A-0.52N, AND A-053.N.

## CODE ANALYSIS

OCCUPANCY GROUP: E, B (USE B, MOST RESTRICTIVE)
CONSTRUCTION TYPE: TYPE V-B, NON-SPRINKLERED

| ALLOWABLE HEIGHT PER TABLE 504.3 & 504.4 | ALLOWABLE | ACTUAL |
|---|---|---|
| NUMBER OF STORIES | 2 | 1 |
| BUILDING HEIGHT | 40'-0" | 12'-0" |

ALLOWABLE BUILDING AREA

| OCCUPANCY GROUP B | |
|---|---|
| BASIC ALLOWABLE AREA A(t) PER TABLE 506.2 | 9,500 S.F. |
| FRONTAGE INCREASE: | N/A |
| SPRINKLER INCREASE: | N/A |
| TOTAL ALLOWABLE AREA A(a) | 9,000 S.F. |
| ACTUAL BUILDING AREA | 5,760 S.F. |
| RATIO CALCULATION | 0.64 < 1 OK |

## LEGEND

SAFE DISPERSAL AREA
(107 PEOPLE X 5 S.F. PER PERSON = 535 S.F.)

EGRESS PATH

## CODE ANALYSIS LEGEND

960 SF 20
48

AREA
OCCUPANT LOAD FACTOR
OCCUPANT LOAD SYMBOL
NUMBER OF OCCUPANTS
48 NUMBER OF OCCUPANTS EXITING
ASSUMED LOT LINE


agency
A# 03 - 124890
DIVISION OF THE STATE ARCHITECT
355 S. GRAND AVE, SUITE 2100
LOS ANGELES, CA 90071
ph: 213.897.3995 fx: 213.897.3159/0726

architecture
planning
interiors

LICENSED ARCHITECT
RICHARD L. CURRIER
CA 17162
REN. 4-30-26
STATE OF CALIFORNIA

architect
tBP/Architecture
4611 Teller Avenue
Newport Beach, CA 92660
ph: 949.673.0300

consultant


# ARCADIA HIGH SCHOOL LOCKER ROOM INTERIM HOUSING

ARCADIA UNIFIED SCHOOL DISTRICT
180 CAMPUS DRIVE
ARCADIA, CALIFORNIA 91006

owner

tBP project number : 21196.00
file name:
drawn by: checked by:
date: 11/18/2024

| Rev: | date: | description: |
|---|---|---|
| | | |


THIS DRAWING AND THE DESIGNS, DEPICTIONS, IDEAS AND OTHER INFORMATION CONTAINED HEREIN CONSTITUTE UNPUBLISHED WORK OF tBP/ARCHITECTURE AND SHALL REMAIN THE PROPERTY OF tBP/ARCHITECTURE IN PERPETUITY. NO PART THEREOF SHALL BE REPRODUCED, DISCLOSED, DISTRIBUTED, SOLD, PUBLISHED OR OTHERWISE USED IN ANY WAY WITHOUT THE ADVANCED EXPRESS WRITTEN CONSENT OF tBP/ARCHITECTURE.


drawing title:

CODE ANALYSIS

drawing no.:

T-4

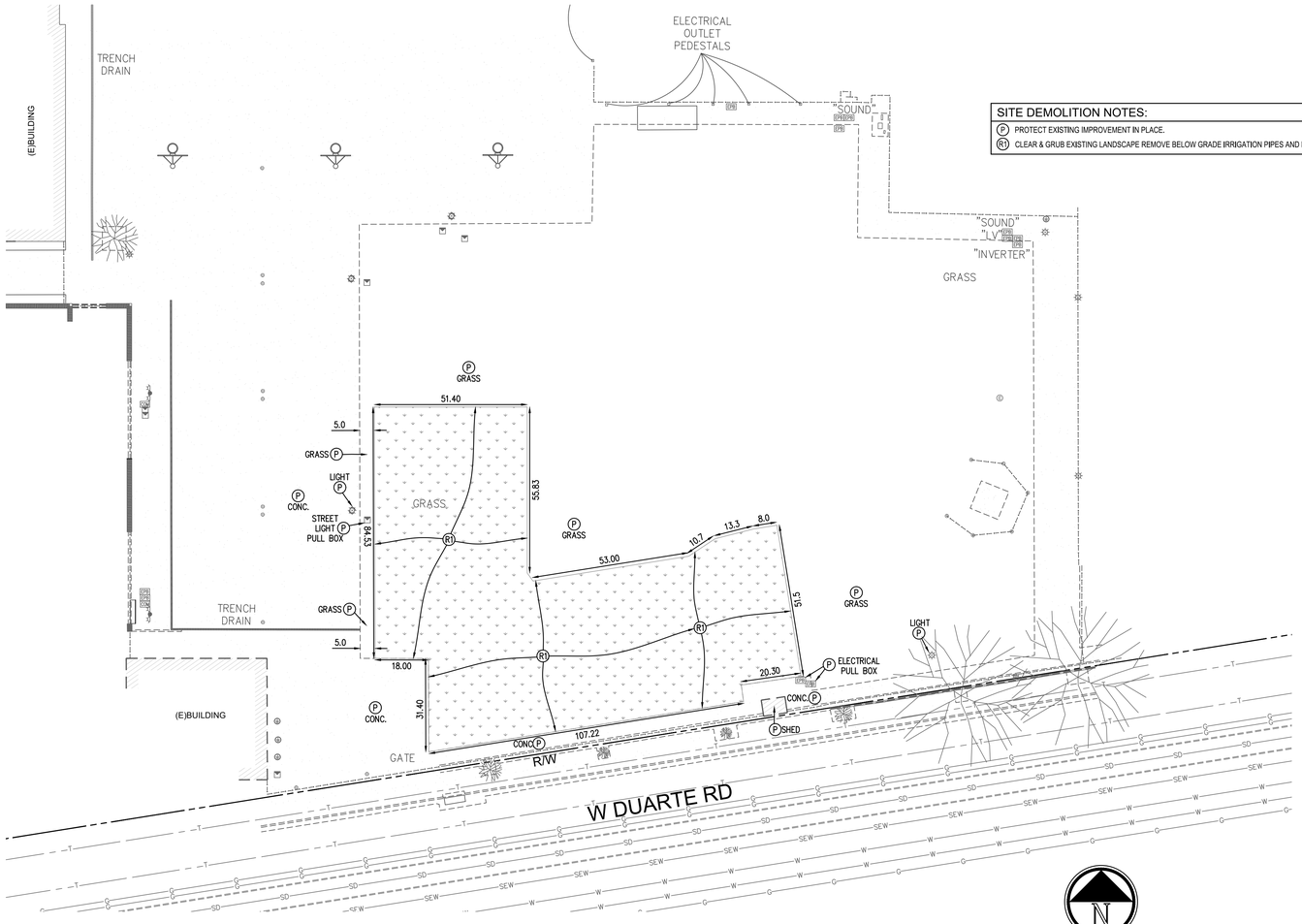


## SITE DEMOLITION NOTES:

(P) PROTECT EXISTING IMPROVEMENT IN PLACE.

(R1) CLEAR & GRUB EXISTING LANDSCAPE REMOVE BELOW GRADE IRRIGATION PIPES AND HEADS.

## LEGEND

| | | | |
|---|---|---|---|
| (S) | SEWER MANHOLE | | OVERHANG POST |
| (D) | STORM DRAIN MANHOLE | | SIGN POST |
| (T) | TELEPHONE MANHOLE | | MAIL BOX |
| | FIRE HYDRANT | | WIRE FENCE |
| (C) | SEWER CLEANOUT | | CHAIN LINK FENCE |
| | WATER VALVE | | BLOCK WALL |
| | GAS VALVE | | TREE |
| | WATER METER | | FLOW DIRECTION |
| | GAS METER | (ICV) | IRRIGATION VALVE |
| | WATER VAULT | T | TRASH ENCLOSURE |
| | GAS VAULT | | GRATE |
| | TELEPHONE VAULT | | SLOPE |
| | ELECTRIC VAULT | CF | CURB FACE |
| EPB | ELECTRIC PULLBOX | INV | INVERT |
| | GUY WIRE | | |
| | LIGHT | | |

## GENERAL DEMOLITION NOTES

1. ALL ITEMS, SHOWN ON THIS PLAN TO BE REMOVED, SHALL BE VERIFIED BY THE SCHOOL DISTRICT PRIOR TO DEMOLITION. THE CONTRACTOR SHALL MEET WITH THE SCHOOLS REPRESENTATIVE PRIOR TO CLEARING AND GRUBBING.
2. THE CONTRACTOR SHALL VERIFY THE LOCATION AND QUANTITY OF EXISTING SURFACE STRUCTURES AND SHALL BE SOLELY RESPONSIBLE FOR ANY UNIDENTIFIED UTILITIES, IMPROVEMENTS, TREES, ETC,. TO BE DEMOLISHED AND REMOVED WITHIN THE DEMOLITION LIMIT LINE, INCLUDING APPURTENANT FOUNDATIONS OR SUPPORTS.
3. REMOVAL OF LANDSCAPING SHALL INCLUDE ROOTS AND ORGANIC MATERIAL.
4. ALL CONCRETE & CMU BLOCK WALLS & PLANTERS SHOWN ON THIS PLAN TO BE REMOVED SHALL INCLUDE WALL FOOTINGS & FOUNDATIONS IN THEIR REMOVAL.
5. THE CONTRACTOR SHALL BE RESPONSIBLE FOR A SITE INSPECTION TO FIELD VERIFY AND FULLY ACKNOWLEDGE THE EXTENT OF THE DEMOLITION WORK. ALL ITEMS TO BE REMOVED SHALL BE MARKED BY THE CONTRACTOR PRIOR TO DEMOLITION.
6. DAMAGE TO ANY EXISTING UTILITIES AND SERVICES WHICH ARE TO REMAIN SHALL BE THE RESPONSIBILITY OF THE CONTRACTOR. CONTRACTOR SHALL REPAIR AND/OR REPLACE IN KIND.
7. TEMPORARY EROSION CONTROL MEASURES SHALL BE IMPLEMENTED TO PREVENT DEBRIS AND UNSUITABLE MATERIALS FROM ENTERING STORM DRAIN, SANITARY SEWERS AND STREETS.
8. DUST CONTROL SHALL BE IMPLEMENTED DURING DEMOLITION.
9. THE PROVISIONS OF CALIFORNIA FIRE CODE CHAPTER 14 AND CALIFORNIA BUILDING CODE CHAPTER 37 SHALL BE ENFORCED ON THIS PROJECT.
10. CONTRACTOR SHALL COMPLY WITH CALIFORNIA FIRE CODE CHAPTER 33 - FIRE SAFETY DURING CONSTRUCTION AND DEMOLITION.
11. THE CONTRACTOR SHALL DEMOLISH AND REMOVE ALL LANDSCAPING WATERING SYSTEMS WITHIN THE DEMOLITION LIMIT LINE UNLESS DESIGNATED TO REMAIN IN PLACE ON THE PLANS. WHERE THE DEMOLITION IMPACTS EXISTING LANDSCAPE TO REMAIN, MODIFY THE EXISTING IRRIGATION SYSTEM, INCLUDING ADDING IRRIGATION HEADS AS NECESSARY TO MAINTAIN COMPLETE AND FULL COVERAGE OF EXISTING PLANNING.
12. CONTRACTOR SHALL NOT DAMAGE ANY PUBLIC SIDEWALK DURING THE COURSE OF HIS WORK. THE USE OF SHORING ON SCHOOL PROPERTY WILL BE REQUIRED TO PROTECT THE PUBLIC SIDEWALK IF NECESSARY.
13. THE CONTRACTOR SHALL BACKFILL SOIL IN THE EXCAVATED TREE ROOT PITS AND THE TRENCHES FOR REMOVED EXISTING UNDERGROUND STRUCTURES, UTILITIES, AND IMPROVEMENTS.
14. THE CONTRACTOR SHALL NOT ABANDON-IN-PLACE ANY EXISTING UNDERGROUND STRUCTURE, UTILITY, OR IMPROVEMENT SO DESIGNATED FOR REMOVAL ON THE PROJECT PLANS UNLESS DIRECTED TO BY THE OWNER.
15. CONTRACTOR TO SAWCUT ALL EXISTING A.C. AND CONCRETE PAVEMENT AT DEMOLITION LIMIT LINE. CONTRACTOR SHALL REMOVE SIDEWALK, CURB & GUTTER TO THE NEAREST JOINT.
16. CONTRACTOR SHALL REPLACE ALL EXISTING IMPROVEMENTS OUTSIDE THE DEMOLITION LIMIT LINE THAT ARE DAMAGED DURING CONSTRUCTION TO MATCH EXISTING, INCLUDING PERMANENT TRENCH RESURFACING.
17. CONTRACTOR SHALL FIELD VERIFY THAT THE REMOVAL OF EXISTING UTILITIES WILL NOT IMPACT AREA OPERATIONS.
18. BEFORE EXCAVATING ANY TRENCH 5 FEET OR MORE IN DEPTH, THE CONTRACTOR SHALL SUBMIT A DETAILED PLAN TO THE SCHOOL SHOWING THE DESIGN OF SHORING, BRACING, SLOPING, OR OTHER PROVISIONS TO BE MADE FOR THE WORKERS' PROTECTION FROM THE HAZARD OF CAVING GROUND DURING THE EXCAVATION OF SUCH TRENCH. IF THE PLAN VARIES FROM THE SHORING SYSTEM STANDARDS, THE PLAN SHALL BE PREPARED BY A REGISTERED CIVIL ENGINEER. NO EXCAVATION SHALL START UNTIL THE SCHOOL HAS ACCEPTED THE PLAN AND THE CONTRACTOR HAS OBTAINED A PERMIT FROM THE STATE DIVISION OF INDUSTRIAL SAFETY.
19. CONTRACTOR IS RESPONSIBLE TO KEEP ALL UTILITES OPERATIONAL THAT SERVES FACILITIES OUTSIDE THE SCOPE OF THE DEMOLITION ZONE. CONTRACTOR IS ALSO RESPONSIBLE TO REROUTE UTILITIES IF NECESSARY TO COMPLETE DEMOLITION.
20. CONTRACTOR SHALL INSTALL A TEMPORARY MINIMUM 8' HIGH CHAIN LINK CONSTRUCTION FENCE, WITH GREEN SCREEN, AROUND PERIMETER OF DEMOLITION AREA.
21. ALL EXISTING DRAINAGE STRUCTURES ON SITE SHALL BE PROTECTED AND REMAIN FUNCTIONAL DURING DEMOLITION AND THROUGH THE CONSTRUCTION PERIOD. THE CONTRACTOR SHALL BE RESPONSIBLE FOR ANY DAMAGE TO THESE STRUCTURES, OR DAMAGE CAUSED TO ADJACENT PROPERTIES DUE TO THE OBSTRUCTION OF THESE STRUCTURES.

### HATCH LEGEND:

= EXISTING BUILDING TO REMAIN

= REMOVE EXISTING LANDSCAPE (R1)

### UNDERGROUND UTILITY LINETYPE LEGEND

| | |
|---|---|
| W | EXISTING DOMESTIC WATER |
| S | EXISTING SANITARY SEWER |
| G | EXISTING GAS |
| E | EXISTING ELECTRICAL/POWER |
| C | EXISTING COMMUNICATIONS |
| SD | EXISTING STORM DRAIN |
| FA | EXISTING FIRE ALARM |

NOTE TO CONTRACTOR: BEFORE DEMOLITION OCCURS, THE CONTRACTOR SHALL COMPLETE HIS OWN UNDERGROUND UTILITY MAPPING SURVEY OF THE PROJECT SITE TO DETERMINE WERE EXISTING UTILITIES ARE AND WHERE POSSIBLE UNDERGROUND CONFLICTS MAY OCCUR.

### EXISTING UNDERGROUND STRUCTURES

THE LOCATIONS OF THE EXISTING UNDERGROUND UTILITIES, AS SHOWN ON THIS PLAN, WERE OBTAINED FROM SOURCES OF VARYING RELIABILITY. NO REPRESENTATION IS MADE AS TO THE ACCURACY OR COMPLETENESS OF SAID UTILITY INFORMATION. THE CONTRACTOR IS CAUTIONED THAT ONLY ACTUAL EXCAVATION WILL REVEAL THE LOCATIONS OF SUCH UNDERGROUND UTILITIES. IT SHALL BE THE CONTRACTOR'S RESPONSIBILITY TO NOTIFY THE OWNERS OF THE UTILITIES OR STRUCTURES CONCERNED BEFORE STARTING WORK. CONTRACTOR SHALL VERIFY LOCATIONS OF EXISTING UTILITIES PRIOR TO ANY EXCAVATION OR IMPROVEMENT. THE CONTRACTOR SHALL TAKE PRECAUTIONARY MEASURES TO PROTECT THE UTILITY LINES SHOWN TO BE PROTECTED HEREON AND ANY OTHER LINES NOT OF RECORD OR NOT SHOWN HEREON.


A# 03 - 124890
DIVISION OF THE STATE ARCHITECT
355 S. GRAND AVE, SUITE 2100
LOS ANGELES, CA 90071
ph: 213.897.3995 fx: 213.897.3159/0726
agency

tBP architecture planning interiors
tBP/Architecture
4611 Teller Avenue
Newport Beach, CA 92660
ph: 949.673.0300
architect

REGISTERED PROFESSIONAL ENGINEER
RAYMOND C. FPL
No. C 34971
Exp. 09-30-25
CIVIL
STATE OF CALIFORNIA

FPL and Associates, Inc.
Traffic • Transportation Civil
30 Corporate Park, Suite 401
Irvine, CA 92606
Phone: 949-252-1688
consultant


# ARCADIA HIGH SCHOOL LOCKER ROOM INTERIM HOUSING

ARCADIA UNIFIED SCHOOL DISTRICT
180 CAMPUS DRIVE
ARCADIA, CALIFORNIA 91006

owner

tBP project number : 21196.00

file name:

drawn by: checked by:

date: 12/16/2024

| Rev: | date: | description: |
|---|---|---|


THIS DRAWING AND THE DESIGNS, DEPICTIONS, IDEAS AND OTHER INFORMATION CONTAINED HEREIN CONSTITUTE UNPUBLISHED WORK OF tBP/ARCHITECTURE AND SHALL REMAIN THE PROPERTY OF tBP/ARCHITECTURE IN PERPETUITY. NO PART THEREOF SHALL BE REPRODUCED, DISCLOSED, DISTRIBUTED, SOLD, PUBLISHED OR OTHERWISE USED IN ANY WAY WITHOUT THE ADVANCED EXPRESS WRITTEN CONSENT OF tBP/ARCHITECTURE.


drawing title:

## SITE DEMOLITION PLAN

drawing no.:

C1.00


Plot Date: 12/16/2024 5:11:46 PM Last Save By: ron.canedy Login: Madeline Chung S:\Jobs\2757 – TBP Architects\2757k24 – Arcadia HS Locker Interim Housing\Civil\Arcadia HS Locker Interim Housing C1.00 – Site Demolition Plan.dwg

HATCH LEGEND:

= EXISTING BUILDING TO REMAIN

= EXISTING CONCRETE

= PROPOSED DECOMPOSED GRANITE (1)

## EXISTING UNDERGROUND STRUCTURES

THE LOCATIONS OF THE EXISTING UNDERGROUND UTILITIES, AS SHOWN ON THIS PLAN, WERE OBTAINED FROM SOURCES OF VARYING RELIABILITY. NO REPRESENTATION IS MADE AS TO THE ACCURACY OR COMPLETENESS OF SAID UTILITY INFORMATION. THE CONTRACTOR IS CAUTIONED THAT ONLY ACTUAL EXCAVATION WILL REVEAL THE LOCATIONS OF SUCH UNDERGROUND UTILITIES. IT SHALL BE THE CONTRACTOR'S RESPONSIBILITY TO NOTIFY THE OWNERS OF THE UTILITIES OR STRUCTURES CONCERNED BEFORE STARTING WORK. CONTRACTOR SHALL VERIFY LOCATIONS OF EXISTING UTILITIES PRIOR TO ANY EXCAVATION OR IMPROVEMENT. THE CONTRACTOR SHALL TAKE PRECAUTIONARY MEASURES TO PROTECT THE UTILITY LINES SHOWN TO BE PROTECTED HEREON AND ANY OTHER LINES NOT OF RECORD OR NOT SHOWN HEREON.

## UNDERGROUND UTILITY LINETYPE LEGEND

| | |
|---|---|
| W | EXISTING DOMESTIC WATER |
| S | EXISTING SANITARY SEWER |
| G | EXISTING GAS |
| E | EXISTING ELECTRICAL/POWER |
| C | EXISTING COMMUNICATIONS |
| SD | EXISTING STORM DRAIN |
| FA | EXISTING FIRE ALARM |

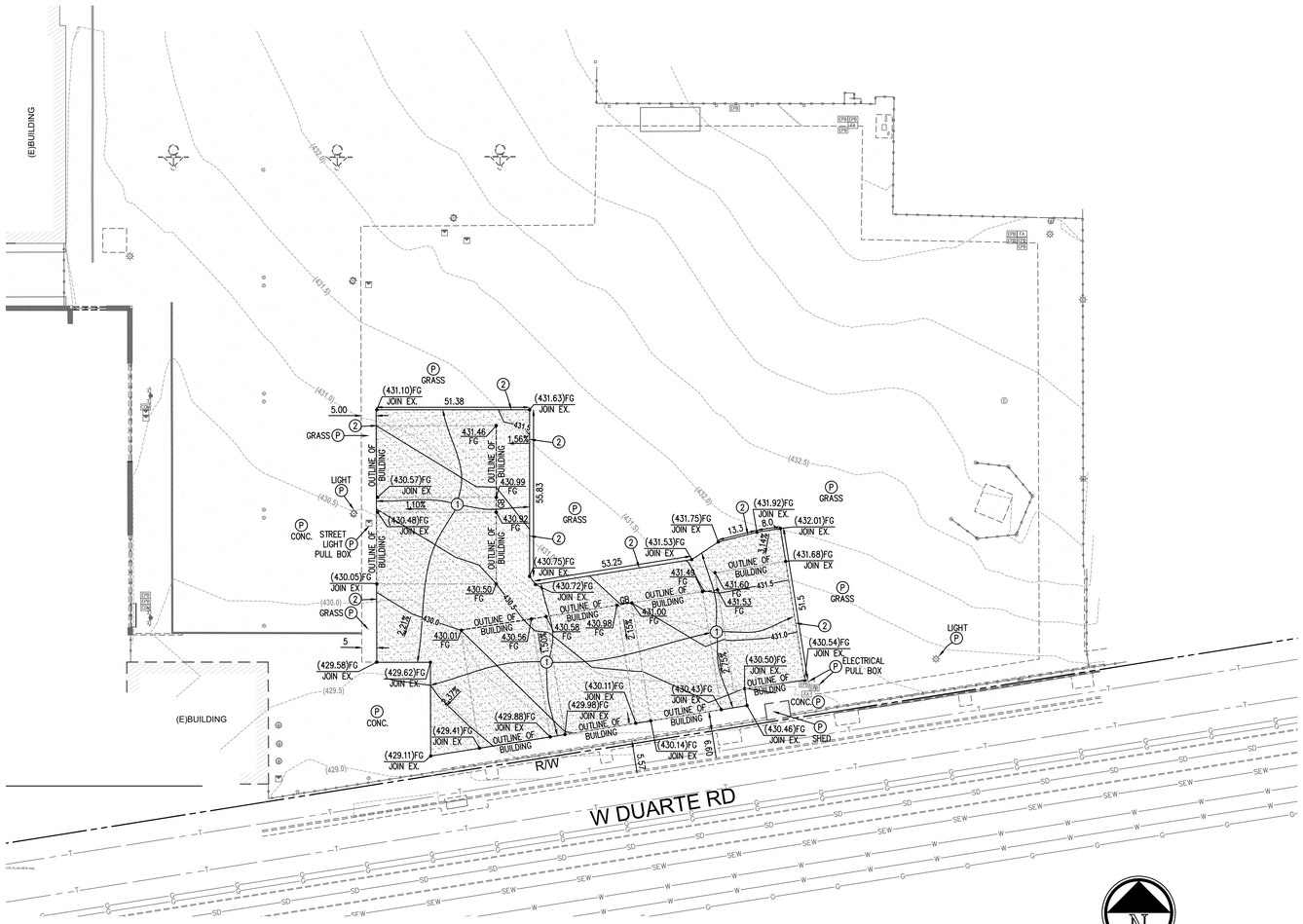


## PHASE 1 - DECOMPOSED GRANITE INSTALLATION

SCALE: 1" = 20'

STABLIZED DECOMPOSED GRANITE INSTALLATION

A. DECOMPOSED GRANITE SHALL BE 2 MIL TRACK FINE PRE-BLENDED WITH BINDER, AVAILABLE FROM WEST COAST SAND AND GRAVEL, GAIL MATERIALS, OR EQUAL.

B. ORGANIC BINDER: PROVIDE G3-PATHWAY STABILIZER BINDER PRE-BLENDED WITH DECOMPOSED GRANITE AT SUPPLY PLANT BY GAIL MATERIALS, OR APPROVED EQUAL.

POST-INSTALLATION STABILIZATION

A. POST-INSTALLATION STABILIZER: PROVIDE G3 - PATHWAY STABILIZER OR EQUAL; AN EXTRA STRENGTH LIQUID POLYMER STABILIZER AS ADDITIONAL STABILIZATION TO MINIMIZE THE EFFECT OF EROSION.

PREPARATION OF SUBGRADE

A. THE SUB-GRADE SHALL BE GRADED TO AN ELEVATION 6 INCHES LOWER THAN THE FINISH GRADES INDICATED ON THE DRAWINGS. AFTER THE PATHWAYS ARE GRADED TO THE REQUIRED ELEVATIONS, THEY SHALL BE COMPACTED AND/OR ROLLED. SUB-GRADE SHALL THEN BE DRAGGED OR FLOATED TO PROVIDE A UNIFORM SURFACE, FREE FROM ANY IRREGULARITIES.

INSTALLATION OF CRUSHED AGREGATE BASE

A. A 3-INCH LAYER OF CRUSHED AGGREGATE BASE MATERIAL SHALL BE INSTALLED. GRADE TO INDICATED LEVELS OR GRADES AND ROLL UNTIL THE SURFACE IS TRUE TO LINE AND REQUIRED SECTION.

INSTALLATION OF DECOMPOSED GRANITE

A. A FINISH LAYER OF DECOMPOSED GRANITE SHALL BE SPREAD OVER THE ENTIRE SURFACE TO FINISH GRADES. THE ENTIRE SURFACE SHALL THEN BE MOISTENED TO PROVIDE FULL DEPTH MOISTURE PENETRATION. WHILE THE DECOMPOSED GRANITE IS STILL THOROUGHLY MOIST, ROLL THE MATERIAL WITH SUITABLE COMPACTION EQUIPMENT TO PROVIDE AT LEAST 95 PERCENT RELATIVE COMPACTION. SURFACE SHALL BE FILLED AS REQUIRED AND AGAIN ROLLED TO PRODUCE A 3-INCH-THICK UNIFORM PLANE WITH PROPER DRAINAGE AND SLOPES. COMPACTION WITH A RAMMER JUMPING JACK OR VIBRATORY ROLLER IS NOT PERMITTED.

B. DECOMPOSED GRANITE SHALL BE INSTALLED AT A MAXIMUM OF 2-INCH COMPACTED LIFT AT A TIME. A 3-INCH-THICK DECOMPOSED GRANITE SURFACE REQUIRED TWO LIFTS TO COMPLETE THE INSTALLATION.

PRE-BLENDED ORGANIC LOCK AGGREGATE SURFACING

A. INSTALL ORGANIC LOCK™ AGGREGATE PAVING OR EQUAL TO A COMPACTED DEPTH OF 3 INCHES.

B. PREWETTED ORGANIC LOCK AGGREGATE PAVING SHALL BE INSTALLED IN TWO LIFTS FOR 3-INCH-THICK PEDESTRIAN USE. ESTIMATED COMPACTED MAX DENSITY IS +/- 129 LBS./CU. FT. THE MOISTURE PERCENTAGE IN THE PREWETTED ORGANIC LOCK AGGREGATE PAVING WILL BE DETERMINED BY GAIL MATERIALS (OR APPROVED SOILS LABORATORY) AND WILL DEPEND ON SELECTED AGGREGATE.

C. DEPENDING ON WEATHER CONDITIONS, THE TIME REQUIRED TO ALLOW THE MATERIAL TO SET-UP BEFORE IT CAN BE COMPACTED VARIES. ALLOW FOR 48 HOURS UNLESS APPROVED. THE TOP LAYER SHALL BE FIRM AND NOT STICKY. COMPACTION CAN BEGIN WHEN YOU CAN WALK ON THE MATERIAL WITHOUT SIGNIFICANTLY SINKING IN AND MATERIAL DOES NOT FEEL MUDDY. IF MATERIAL STICKS TO THE ROLLER DURING COMPACTION, ALLOW THE MATERIAL TO FURTHER DRY. DO NOT ALLOW THE MATERIAL TO COMPLETELY DRY OUT.

D. MAKE 4-6 PASSES USING A 1-10 TON DOUBLE OR SINGLE STATIC DRUM ROLLER, OR EQUIVALENT. DO NOT USE A VIBRATORY COMPACTOR OR VIBRATORY SETTING ON THE COMPACTOR. THE CONTRACTOR SHALL SELECT THE PROPER SIZE ROLLER FOR THE APPROPRIATE APPLICATION SUBJECT TO APPROVAL OF THE PROJECT INSPECTOR.

E. AFTER FINAL COMPACTION, THE SURFACE SHALL BE TRUE TO ELEVATION AND SHALL NOT VARY BY MORE THAN (1/4") TESTED WITH A STRAIGHT EDGE AT ANY LOCATION ON THE SURFACES. SURFACES SHALL BE INSTALLED WITH A CROSS SLOPE OF MINIMUM 1% TO MAXIMUM 1.8% AS SHOWN ON THE CIVIL DRAWINGS AT PER ADA STANDARDS FOR ACCESSIBILITY.

F. COMPACTION TESTING SHALL NOT BE CONDUCTED UNTIL THE ORGANIC LOCK AGGREGATE PAVING HAS BEEN ALLOWED TO THOROUGHLY DRY AND CURE.

INSTALLATION OF POST-INSTALLATION STABILIZER

A. STABILIZER APPLICATION: APPLY STABILIZER TO GRADED MATERIAL AT A RATE OF 20FT²/GALLON USING A STANDARD WATERING CAN WITH SHOWER HEAD OR A PRESSURIZED HAND-HELD OR BACKPACK SPRAYER. FOR LARGER APPLICATIONS, ELECTRIC, HIGH-CAPACITY SPRAYERS MAY BE USED. ALLOW 45-90 MINUTES FOR STABILIZER TO FULLY ABSORB INTO THE AGGREGATE. COOL, OVERCAST WEATHER AND/OR SHADING CAN INCREASE ABSORPTION TIME. IF AFTER 90 MINUTES THE SURFACE IS STILL SATURATED OR APPEARS MUDDY, WAIT AN ADDITIONAL 15-30 MINUTES TO ALLOW STABILIZER TO FULLY ABSORB BEFORE COMPACTION. PROPER COMPACTION MAY NOT BE ACHIEVED IF MATERIAL IS TOO SATURATED AND CAN CREATE AESTHETIC BLEMISHES. DO NOT ALLOW STABILIZER LIQUID TO COMPLETELY DRY BEFORE COMPACTING, AS THIS WILL ADVERSELY AFFECT THE OVERALL STRUCTURAL AND CROSS-LINKING STRENGTH.

B. COMPACT SURFACE: AFTER STABILIZER IS FULLY ABSORBED INTO MATERIAL, COMPACT SURFACE LAYER TO 95% OR GREATER COMPACTION USING A VIBRATORY PLATE COMPACTOR (TYPICALLY 3-4 LONGITUDINAL PASSES). USE A HAND TAMPER IN AREAS THAT CANNOT BE REACHED BY THE PLATE COMPACTOR. IF THE SURFACE LOOKS SMEARED OR STICKS TO THE BOTTOM OF THE COMPACTOR, WAIT AN ADDITIONAL 20-30 MINUTES BEFORE ATTEMPTING TO COMPACT. IF COSMETIC REPAIRS ARE REQUIRED, USE A HAND TAMP AND/OR COMMON MASONRY TROWEL TO MAKE ADJUSTMENTS AS NEEDED.

C. APPLY TOPCOAT: APPLY FIRST TOPCOAT 12-24 HOURS AFTER THE FIRST APPLICATION OR ONCE THE SURFACE HAS COMPLETELY DRIED AT A RATE OF 30FT²/GALLON. APPLY SECOND TOPCOAT 12-24 HOURS AFTER THE FIRST TOPCOAT APPLICATION AT A RATE OF 40FT²/GALLON. SURFACE IS COMPLETELY DRY AND READY TO USE WHEN IT IS HARD TO THE TOUCH. ALLOW ANOTHER 24-72 HOURS TO FULLY CURE.

D. INSTALLATION CONDITION:

1. INSTALLATION AND CURING PHASES REQUIRE AN AMBIENT AND SURFACE TEMPERATURE RANGE OF 55°-90° F. SHADED, LOW SUNLIGHT, OR COLDER AREAS WILL LENGTHEN CURE TIMES. CONVERSELY, DIRECT SUN, WARMER AREAS WILL SHORTEN CURE TIMES. AVOID TEMPERATURE AT OR BELOW FREEZING TEMPERATURES OR ABOVE 100° F.
2. DO NOT INSTALL STABILIZER 72 HOURS BEFORE OR AFTER RAINFALL. IN EXCESSIVELY WET CONDITIONS, ALLOW SURFACE MATERIALS AND PROJECT ARE TO DRY. ALWAYS CROWN OR SLOPE FINISHED GRADE TO ALLOW FOR SUFFICIENT DRAINAGE, RUNOFF, AND GROUND WATER LEVELS. WET CONDITIONS WILL AFFECT THE SURFACE MATERIAL RIGIDITY. DO NOT USE WEED FABRIC AS AN UNDERLAYMENT.

### PHASE 1 CONSTRUCTION NOTES

(P) PROTECT EXISTING IMPROVEMENT IN PLACE.
(1) CONSTRUCT STABILIZED DECOMPOSED GRANITE PER DETAIL 1 HEREON.
(2) CONSTRUCT REDWOOD HEADER PER DETAIL 2.

CONTRACTOR SHALL COMPLY WITH 2022 C.B.C. AND C.F.C. CHAPTER 33 - FIRE SAFETY DURING CONSTRUCTION AND DEMOLITION

GRADING PLANS, DRAINAGE IMPROVEMENTS, ROAD AND ACCESS REQUIREMENTS AND ENVIRONMENTAL HEALTH CONSIDERATIONS SHALL COMPLY WITH ALL LOCAL ORDINANCES.

EARTHWORK NOTICE TO CONTRACTOR: NO EARTHWORK ANALYSIS HAS BEEN COMPLETED WITH RESPECT TO VOLUMES OF SOILS TO BE EXCAVATED, PLACED, OR IMPORTED IN ORDER TO PROVIDE THE FINISHED GRADES SHOWN ON THE PLANS. THE CONTRACTOR IS SOLELY RESPONSIBLE FOR VERIFYING THE EARTHWORK QUANTITIES NECESSARY TO COMPLETE THE PROJECT.

CONSTRUCTION STORM WATER NOTE:
GRADING WORK ASSOCIATED WITH THIS PROJECT WILL DISTURB LESS THAN 1 ACRE OF SOIL AND THUS SHALL NOT BE SUBJECT TO COMPLY WITH NPDES STORM WATER CONSTRUCTION GENERAL PERMIT 2022-0057-DWQ (AS ADOPTED SEPTEMBER 8, 2022)

NOTE TO CONTRACTOR: BEFORE DEMOLITION OR TRENCHING OF ANY KIND OCCURS, THE CONTRACTOR SHALL COMPLETE HIS OWN UNDERGROUND UTILITY MAPPING SURVEY OF THE PROJECT SITE TO DETERMINE WERE EXISTING UTILITIES ARE AND WHERE POSSIBLE UNDERGROUND CONFLICTS MAY OCCUR. PROVIDE SURVEY TO OWNER PRIOR TO STARTING WORK.

### LEGEND

| | | | |
|---|---|---|---|
| (S) | SEWER MANHOLE | | OVERHANG POST |
| (D) | STORM DRAIN MANHOLE | | SIGN POST |
| (T) | TELEPHONE MANHOLE | | MAIL BOX |
| | FIRE HYDRANT | | WIRE FENCE |
| (C) | SEWER CLEANOUT | | CHAIN LINK FENCE |
| | WATER VALVE | | BLOCK WALL |
| | GAS VALVE | | TREE |
| | WATER METER | | FLOW DIRECTION |
| | GAS METER | (ICV) | IRRIGATION VALVE |
| (M) | WATER VAULT | T | TRASH ENCLOSURE |
| (G) | GAS VAULT | | GRATE |
| (T) | TELEPHONE VAULT | | SLOPE |
| (E) | ELECTRIC VAULT | CF | CURB FACE |
| EPB | ELECTRIC PULLBOX | INV | INVERT |
| | GUY WIRE | (430.0) | (E)CONTOUR ELEVATION |
| | LIGHT | 430.0 | PROPOSED ELEVATION |
| FS | FINISHED SURFACE | | |
| FF | FINISHED FLOOR | | |

### HORIZONTAL CONTROL

A CAD GEOMETRIC ELECTRONIC FILE SHALL BE MADE AVAILABLE TO THE CONTRACTOR UPON REQUEST FOR THE CONTRACTOR'S SURVEYOR TO LAYOUT THE CONSTRUCTION STAKING OF THE PROJECT. THE SURVEYOR OR CONTRACTOR WILL NEED TO SIGN A WAIVER FORM BEFORE RELEASE OF ANY CAD ELECTRONIC DRAWINGS.

### BENCHMARK:

COUNTY SURVEYOR BENCHMARK 1G4335

ELEVATION: 481.539 FEET QUAD YEAR 2013

"MON IN SE COR C. B.52.5FT N/O BCR @ NE COR BALDWIN AVE & DUARTE RD MKD (BM 20-5A 1966 RE5869)"

### BASIS OF BEARINGS:

THE BASIS OF BEARINGS FOR THIS PROJECT IS N 80°58'43" E ALONG THE CENTERLINE OF DUARTE ROAD AS SHOWN ON A MAP FILED IN RECORD OF SURVEY BOOK 260, PAGE 54, LOS ANGELES COUNTY.

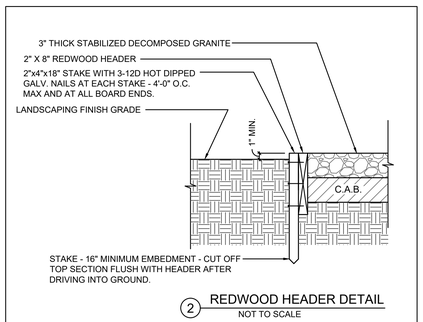


(2) REDWOOD HEADER DETAIL
NOT TO SCALE

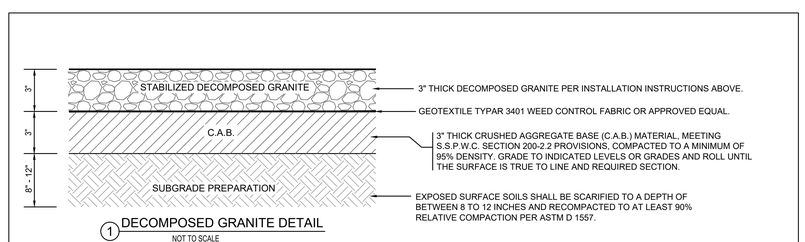


(1) DECOMPOSED GRANITE DETAIL
NOT TO SCALE


A# 03 - 124890
DIVISION OF THE STATE ARCHITECT
355 S. GRAND AVE, SUITE 2100
LOS ANGELES, CA 90071
ph: 213.897.3995 fx: 213.897.3159/0726
agency

tBP architecture planning interiors
tBP/Architecture
4611 Teller Avenue
Newport Beach, CA 92660
ph: 949.673.0300
architect

FPL and Associates, Inc.
Traffic • Transportation Civil
30 Corporate Park, Suite 401
Irvine, CA 92606
Phone: 949-252-1688
consultant


# ARCADIA HIGH SCHOOL LOCKER ROOM INTERIM HOUSING

ARCADIA UNIFIED SCHOOL DISTRICT
180 CAMPUS DRIVE
ARCADIA, CALIFORNIA 91006

owner

tBP project number : 21196.00
file name:
drawn by: checked by:
date: 12/16/2024

| Rev: | date: | description: |
|---|---|---|
| | | |


THIS DRAWING AND THE DESIGNS, DEPICTIONS, IDEAS AND OTHER INFORMATION CONTAINED HEREIN CONSTITUTE UNPUBLISHED WORK OF tBP/ARCHITECTURE AND SHALL REMAIN THE PROPERTY OF tBP/ARCHITECTURE IN PERPETUITY. NO PART THEREOF SHALL BE REPRODUCED, DISCLOSED, DISTRIBUTED, SOLD, PUBLISHED OR OTHERWISE USED IN ANY WAY WITHOUT THE ADVANCED EXPRESS WRITTEN CONSENT OF tBP/ARCHITECTURE.


drawing title:
GRADING PLAN
PHASE 1

drawing no.:
C2.00


Plot Date: 12/16/2024 5:12:29 PM Last Save By: ron.conedy Login: Madeline Chung S:\Jobs\2757 - TBP Architects\2757x24 - Arcadia HS Locker Interim Housing\Civil\Arcadia HS Locker Interim Housing C2.00 - Grading Plan.dwg

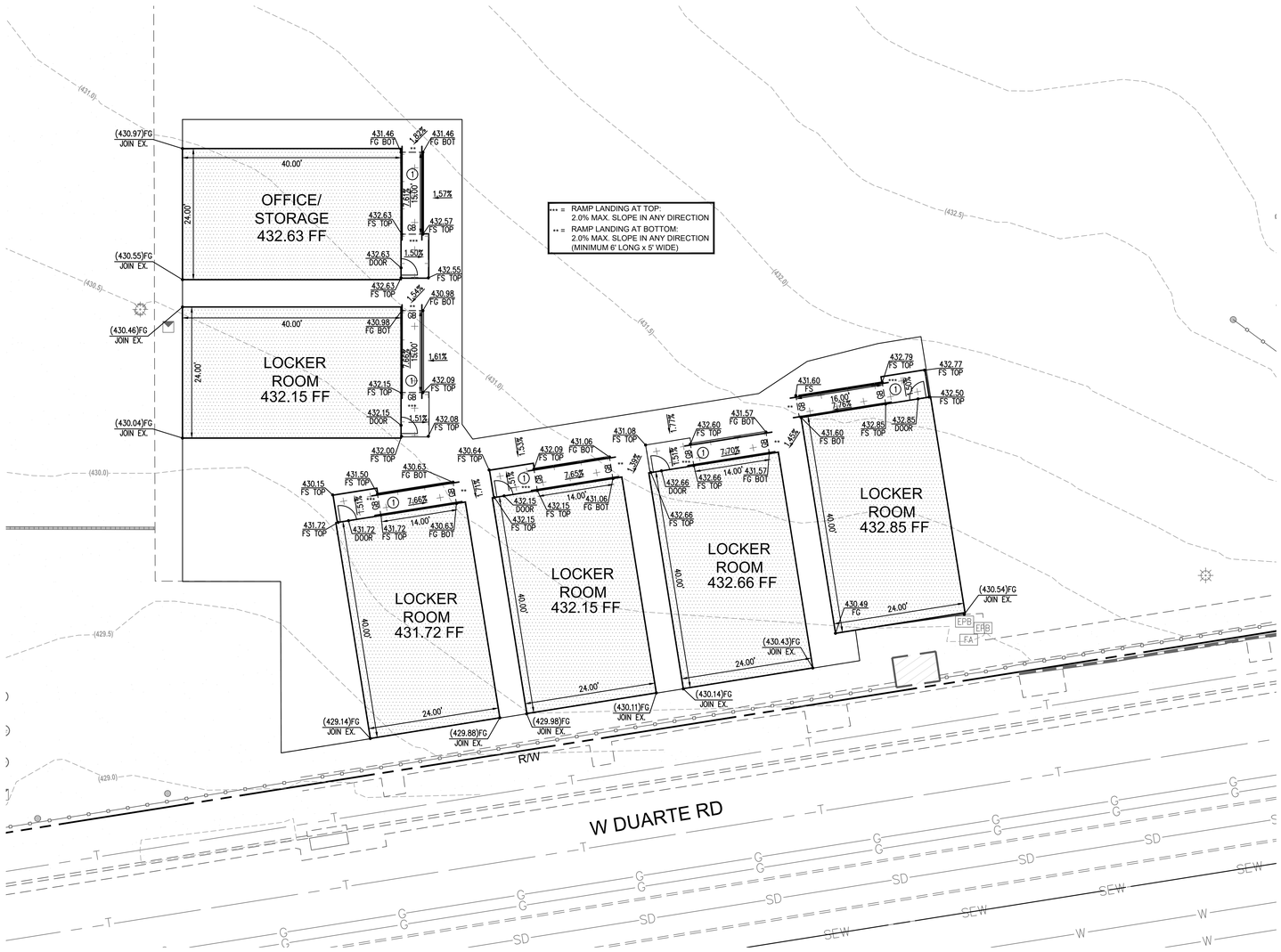


*** = RAMP LANDING AT TOP:
2.0% MAX. SLOPE IN ANY DIRECTION

** = RAMP LANDING AT BOTTOM:
2.0% MAX. SLOPE IN ANY DIRECTION
(MINIMUM 6' LONG x 5' WIDE)

# PHASE 2 - PORTABLE BUILDING INSTALLATION

N

10 5 0 10 20 30

SCALE: 1" = 10'

## LEGEND

| | | | |
|---|---|---|---|
| (S) | SEWER MANHOLE | | OVERHANG POST |
| (D) | STORM DRAIN MANHOLE | | SIGN POST |
| (T) | TELEPHONE MANHOLE | | MAIL BOX |
| | FIRE HYDRANT | | WIRE FENCE |
| (C) | SEWER CLEANOUT | | CHAIN LINK FENCE |
| | WATER VALVE | | BLOCK WALL |
| | GAS VALVE | | TREE |
| | WATER METER | | FLOW DIRECTION |
| | GAS METER | (IRV) | IRRIGATION VALVE |
| (W) | WATER VAULT | T | TRASH ENCLOSURE |
| (G) | GAS VAULT | | GRATE |
| (T) | TELEPHONE VAULT | | SLOPE |
| (E) | ELECTRIC VAULT | CF | CURB FACE |
| EPB | ELECTRIC PULLBOX | INV | INVERT |
| | GUY WIRE | | |
| | LIGHT | | |
| FS | FINISHED SURFACE | ---(430.0)--- | (E)CONTOUR ELEVATION |
| FF | FINISHED FLOOR | | |

## PHASE 2 CONSTRUCTION NOTES

(P) PROTECT EXISTING IMPROVEMENT IN PLACE.

(1) CONSTRUCT PORTABLE BUILDING LANDING AND RAMP PER GRADES HEREON OVER DECOMPOSED GRANITE INSTALLED IN PHASE 1.

CONTRACTOR SHALL COMPLY WITH 2022 C.B.C. AND C.F.C. CHAPTER 33 - FIRE SAFETY DURING CONSTRUCTION AND DEMOLITION

GRADING PLANS, DRAINAGE IMPROVEMENTS, ROAD AND ACCESS REQUIREMENTS AND ENVIRONMENTAL HEALTH CONSIDERATIONS SHALL COMPLY WITH ALL LOCAL ORDINANCES.

EARTHWORK NOTICE TO CONTRACTOR: NO EARTHWORK ANALYSIS HAS BEEN COMPLETED WITH RESPECT TO VOLUMES OF SOILS TO BE EXCAVATED, PLACED, OR IMPORTED IN ORDER TO PROVIDE THE FINISHED GRADES SHOWN ON THE PLANS. THE CONTRACTOR IS SOLELY RESPONSIBLE FOR VERIFYING THE EARTHWORK QUANTITIES NECESSARY TO COMPLETE THE PROJECT.

CONSTRUCTION STORM WATER NOTE:
GRADING WORK ASSOCIATED WITH THIS PROJECT WILL DISTURB LESS THAN 1 ACRE OF SOIL AND THUS SHALL NOT BE SUBJECT TO COMPLY WITH NPDES STORM WATER CONSTRUCTION GENERAL PERMIT 2022-0057-DWQ (AS ADOPTED SEPTEMBER 8, 2022)

NOTE TO CONTRACTOR: BEFORE DEMOLITION OR TRENCHING OF ANY KIND OCCURS, THE CONTRACTOR SHALL COMPLETE HIS OWN UNDERGROUND UTILITY MAPPING SURVEY OF THE PROJECT SITE TO DETERMINE WERE EXISTING UTILITIES ARE AND WHERE POSSIBLE UNDERGROUND CONFLICTS MAY OCCUR. PROVIDE SURVEY TO OWNER PRIOR TO STARTING WORK.

HATCH LEGEND:

= EXISTING BUILDING TO REMAIN

= EXISTING CONCRETE

= PROPOSED RAISED PLATFORM & RAMP INSTALLED OVER ASPHALT PAVEMENT (1) (TO BE INSTALLED IN PHASE 1).

## UNDERGROUND UTILITY LINETYPE LEGEND

| | |
|---|---|
| W | EXISTING DOMESTIC WATER |
| S | EXISTING SANITARY SEWER |
| G | EXISTING GAS |
| E | EXISTING ELECTRICAL/POWER |
| C | EXISTING COMMUNICATIONS |
| SD | EXISTING STORM DRAIN |
| FA | EXISTING FIRE ALARM |

## EXISTING UNDERGROUND STRUCTURES

THE LOCATIONS OF THE EXISTING UNDERGROUND UTILITIES, AS SHOWN ON THIS PLAN, WERE OBTAINED FROM SOURCES OF VARYING RELIABILITY. NO REPRESENTATION IS MADE AS TO THE ACCURACY OR COMPLETENESS OF SAID UTILITY INFORMATION. THE CONTRACTOR IS CAUTIONED THAT ONLY ACTUAL EXCAVATION WILL REVEAL THE LOCATIONS OF SUCH UNDERGROUND UTILITIES. IT SHALL BE THE CONTRACTOR'S RESPONSIBILITY TO NOTIFY THE OWNERS OF THE UTILITIES OR STRUCTURES CONCERNED BEFORE STARTING WORK. CONTRACTOR SHALL VERIFY LOCATIONS OF EXISTING UTILITIES PRIOR TO ANY EXCAVATION OR IMPROVEMENT. THE CONTRACTOR SHALL TAKE PRECAUTIONARY MEASURES TO PROTECT THE UTILITY LINES SHOWN TO BE PROTECTED HEREON.


A# 03 - 124890
DIVISION OF THE STATE ARCHITECT
355 S. GRAND AVE, SUITE 2100
LOS ANGELES, CA 90071
ph: 213.897.3995 fx: 213.897.3159/0726
agency

tBP
architecture
planning
interiors

tBP/Architecture
4611 Teller Avenue
Newport Beach, CA 92660
ph: 949.673.0300
architect

REGISTERED PROFESSIONAL ENGINEER
LAWRENCE F. FRANCIS
No. C 34971
Exp. 09-30-25
CIVIL
STATE OF CALIFORNIA

FPL FPL and Associates, Inc.
Traffic • Transportation Civil
30 Corporate Park, Suite 401
Irvine, CA 92606
Phone: 949-252-1688
consultant


ARCADIA HIGH SCHOOL
LOCKER ROOM INTERIM HOUSING

ARCADIA UNIFIED SCHOOL DISTRICT
180 CAMPUS DRIVE
ARCADIA, CALIFORNIA 91006

owner

tBP project number : 21196.00

file name:

drawn by: checked by:

date: 12/16/2024

| Rev: | date: | description: |
|---|---|---|
| | | |


THIS DRAWING AND THE DESIGNS, DEPICTIONS, IDEAS AND OTHER INFORMATION CONTAINED HEREIN CONSTITUTE UNPUBLISHED WORK OF tBP/ARCHITECTURE AND SHALL REMAIN THE PROPERTY OF tBP/ARCHITECTURE IN PERPETUITY. NO PART THEREOF SHALL BE REPRODUCED, DISCLOSED, DISTRIBUTED, SOLD, PUBLISHED OR OTHERWISE USED IN ANY WAY WITHOUT THE ADVANCED EXPRESS WRITTEN CONSENT OF tBP/ARCHITECTURE.


drawing title:
GRADING PLAN
PHASE 2

drawing no.:
C2.01


Plot Date: 12/16/2024 5:13:13 PM Last Save By: madeline.chung Login: Madeline Chung S:\Jobs\2757 - TBP Architects\2757k24 - Arcadia HS Locker Interim Housing\Civil\Arcadia HS Locker Interim Housing C2.01 - Grading Plan.dwg

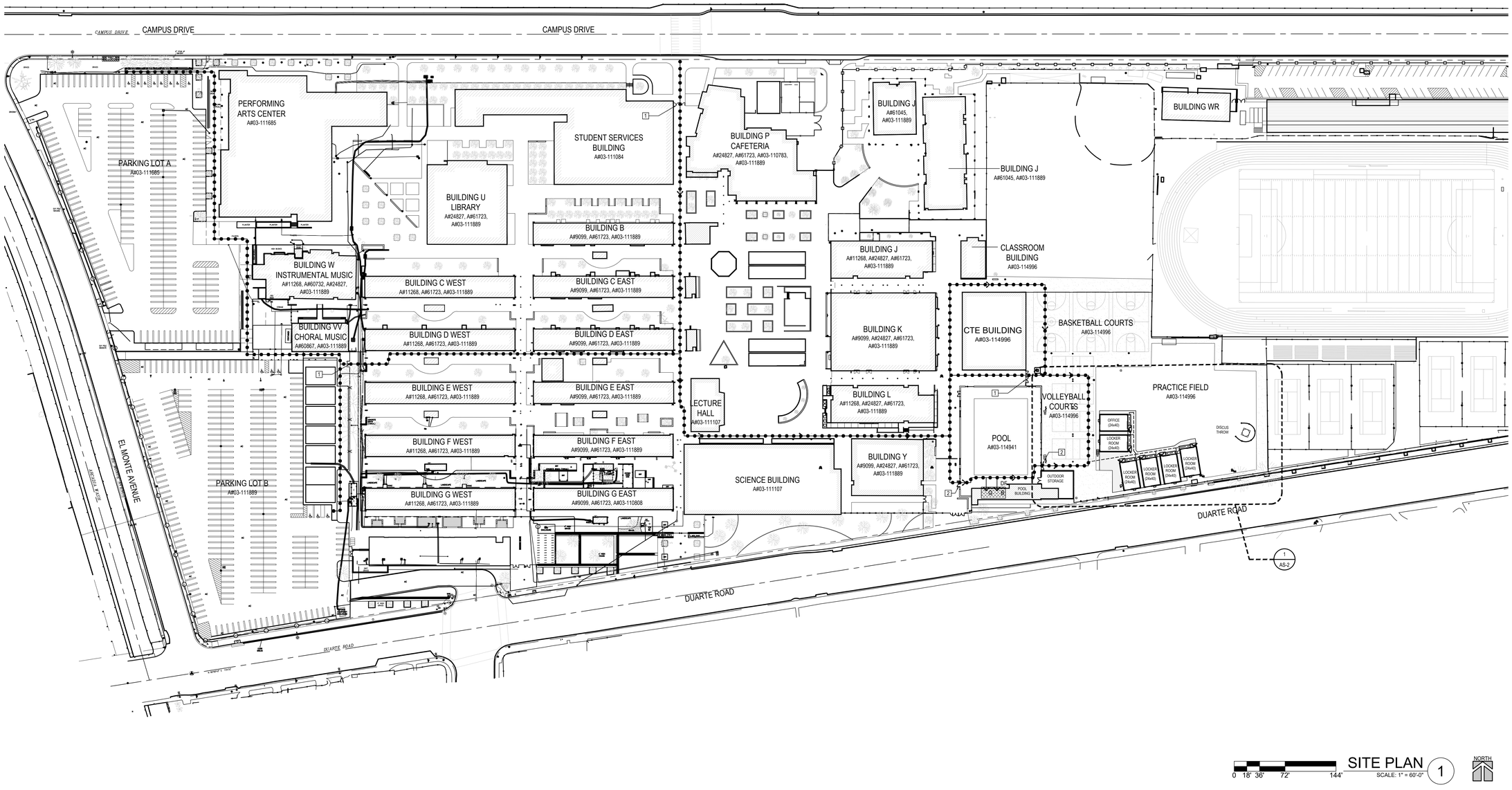


SITE PLAN 1

SCALE: 1" = 60'-0"

0 18' 36' 72' 144'

NORTH

## CERTIFICATION STATUS

| CERTIFICATION STATUS | | |
|---|---|---|
| APPLICATION NO. | CERTIFICATION STATUS | DATE |
| 03-116178 | #1 CERTIFICATION | 10/21/2003 |
| 03-115185 | #1 CERTIFICATION | 3/8/2016 |
| 03-114996 | #1 CERTIFICATION | 2/16/2016 |
| 03-114941 | #1 CERTIFICATION | 2/17/2016 |
| 03-112917 | #1 CERTIFICATION | 8/7/2013 |
| 03-112458 | #1 CERTIFICATION | 9/19/2014 |
| 03-111889 | #1 CERTIFICATION | 3/24/2016 |
| 03-111685 | #1 CERTIFICATION | 2/5/2015 |
| 03-111582 | #1 CERTIFICATION | 1/11/2011 |
| 03-111515 | #1 CERTIFICATION | 1/11/2011 |
| 03-111107 | #1 CERTIFICATION | 5/26/2022 |
| 03-111084 | #1 CERTIFICATION | 7/10/2013 |
| 03-110808 | #1 CERTIFICATION | 8/15/2012 |
| 03-110783 | #2 CERTIFICATION | 3/3/2011 |
| 03-108085 | #1 CERTIFICATION | 11/16/2005 |
| 03-102955 | #1 CERTIFICATION | 3/5/2013 |

## PARKING TABULATION

**PARKING LOT B**

*(299) TOTAL SPACES PROVIDED*
- *(7) TOTAL ACCESSIBLE SPACES PROVIDED*
- *(1) ACCESSIBLE VAN SPACES PROVIDED*

*CBC TABLE 11B-208.2*
- *301-400 TOTAL NUMBER OF PARKING SPACES PROVIDED*
- *(8) TOTAL ACCESSIBLE SPACES REQUIRED*
- *(2) ACCESSIBLE VAN SPACE REQUIRED*

*CGBSC TABLE 5.106.5.3.1 AND CBC TABLE 11B-228.3.2.1*
- *303 TOTAL NUMBER OF PARKING SPACES PROVIDED*
- *(61) TOTAL EV CAPABLE SPACES REQUIRED*

## SHEET NOTES

1. LOCATIONS OF ALL UTILITIES SHOWN ARE APPROXIMATE. CONTRACTOR SHALL EXERCISE EXTREME CAUTION IN EXCAVATING AND TRENCHING TO AVOID INTERCEPTING EXISTING PIPING OR CONDUITS. THE ARCHITECT IS NOT RESPONSIBLE FOR THE LOCATIONS OF UNDERGROUND UTILITIES OR STRUCTURES WHETHER OR NOT SHOWN OR DETAILED AND INSTALLED BY OTHER CONTRACTS. THE CONTRACTOR SHALL IMMEDIATELY NOTIFY THE OWNER SHOULD SUCH UNIDENTIFIED CONDITIONS BE DISCOVERED. THESE DRAWINGS AND SPECIFICATIONS DO NOT INCLUDE NECESSARY COMPONENTS FOR CONSTRUCTION SAFETY.
2. VERIFY ALL EXISTING & FINISH GRADES, DIMENSIONS AND SITE CONDITIONS BEFORE COMMENCING WORK AND REPORT ANY DISCREPANCIES TO THE ARCHITECT.
3. ALL GRADING WORK SHALL CONFORM TO APPLICABLE PROVISIONS OF THE CALIFORNIA BUILDING CODE, TITLE 24, AND LOCAL CODES OR ORDINANCES. IN THE EVENT OF CONFLICTING PROVISIONS, ALWAYS CONFORM TO THE STRICTER REQUIREMENTS.
4. DETERMINE NECESSARY SUBGRADE ELEVATIONS AND CONSTRUCT SMOOTH TRANSITIONS BETWEEN FINISHED GRADES. FINISHED GRADE ELEVATIONS ADJACENT TO BUILDING PERIMETERS TO BE 6" BELOW FINISHED FLOOR ELEVATIONS, U.N.O.

## PATH OF TRAVEL NOTE

DESIGN PROFESSIONAL IN GENERAL RESPONSIBLE CHARGE STATEMENT: THE POT IDENTIFIED IN THESE CONSTRUCTION DOCUMENTS IS COMPLIANT WITH THE CURRENT APPLICABLE CALIFORNIA BUILDING CODE ACCESSIBILITY PROVISIONS FOR THE PATH OF TRAVEL REQUIREMENTS FOR ALTERATIONS, ADDITIONS AND STRUCTURAL REPAIRS. AS PART OF THE DESIGN OF THIS PROJECT, THE POT WAS EXAMINED AND ANY ELEMENTS, COMPONENTS OR PORTIONS OF THE POT THAT WERE DETERMINED TO BE NONCOMPLIANT 1) HAVE BEEN IDENTIFIED AND 2) THE CORRECTIVE WORK NECESSARY TO BRING THEM INTO COMPLIANCE HAS BEEN INCLUDED WITHIN THE SCOPE OF THIS PROJECT'S WORK THROUGH DETAILS, DRAWINGS AND SPECIFICATIONS INCORPORATED INTO THESE CONSTRUCTION DOCUMENTS. ANY NONCOMPLIANT ELEMENTS, COMPONENTS OR PORTIONS OF THE POT THAT WILL NOT BE CORRECTED BY THIS PROJECT BASED ON VALUATION THRESHOLD LIMITATIONS OR A FINDING OF UNREASONABLE HARDSHIP ARE SO INDICATED IN THESE CONSTRUCTION DOCUMENTS. ARCHITECT HAS VERIFIED P.O.T. IS BARRIER FREE.

DURING CONSTRUCTION, IF POT ITEMS WITHIN THE SCOPE OF THE PROJECT REPRESENTED AS CODE COMPLIANT ARE FOUND TO BE NONCONFORMING BEYOND REASONABLE CONSTRUCTION TOLERANCES, THEY SHALL BE BROUGHT INTO COMPLIANCE WITH THE CBC AS PART OF THIS PROJECT BY MEANS OF A CONSTRUCTION CHANGE DOCUMENT.

PATH OF TRAVEL, TECHNICAL REQUIREMENTS FOR ACCESSIBLE ROUTE "ACCESSIBLE PATH OF TRAVEL AS INDICATED ON PLAN IS A BARRIER-FREE ACCESS ROUTE WITHOUT ABRUPT LEVEL CHANGES EXCEEDING 1/2" IF BEVELED AT 1:2 MAXIMUM SLOPE OR VERTICAL LEVEL CHANGES NOT EXCEEDING 1/4" MAXIMUM AND AT LEAST 48" IN WIDTH. SURFACE IS STABLE, FIRM, AND SLIP-RESISTANT. CROSS-SLOPE SHALL NOT BE STEEPER THAN 1:48 AND SLOPE IN THE DIRECTION OF TRAVEL SHALL NOT BE STEEPER THAN 1:20. ACCESSIBLE PATH OF TRAVEL SHALL BE MAINTAINED FREE OF OVERHANGING OBSTRUCTIONS TO 80" MINIMUM AND FREE OF OBJECTS PROTRUDING MORE THAN 4" FROM THE WALL, AVOVE 27" AND LESS THAN 80" AVOVE THE FLOOR. ARCHITECT SHALL VERIFY THAT THERE ARE NO BARRIERS IN THE PATH OF TRAVEL."

## LEGEND

| | |
|---|---|
| | PROPERTY LINE |
| | (E) PATH OF TRAVEL PER, A#03-114996 |
| | PATH OF TRAVEL |
| | EXISTING RESTROOMS, PER A#03-114941 |
| | NEW DECOMPOSED GRANITE |
| B | BOYS RESTROOM |
| G | GIRLS RESTROOMS |
| A | ALL-GENDER RESTROOMS |
| DF | DRINKING FOUNTAIN |
| | FIRE HYDRANT |

## KEYNOTES

1. (E) GATE WITH PANIC HARDWARE, PER A#03-111889
2. (E) GATE WITH PANIC HARDWARE, PER A#03-114941

## KEYPLAN

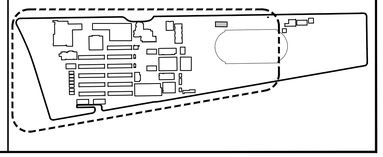

A# 03 - 124890
DIVISION OF THE STATE ARCHITECT
355 S. GRAND AVE, SUITE 2100
LOS ANGELES, CA 90071
ph: 213.897.3995 fx: 213.897.3159/0726
agency

tBP
architecture
planning
interiors

tBP/Architecture
4611 Teller Avenue
Newport Beach, CA 92660
ph: 949.673.0300
architect

consultant

# ARCADIA HIGH SCHOOL LOCKER ROOM INTERIM HOUSING

ARCADIA UNIFIED SCHOOL DISTRICT
180 CAMPUS DRIVE
ARCADIA, CALIFORNIA 91006

owner

tBP project number : 21196.00

file name:

drawn by: checked by:

date: 11/18/2024

| Rev: | date: | description: |
|---|---|---|
| | | |

THIS DRAWING AND THE DESIGNS, DEPICTIONS, IDEAS AND OTHER INFORMATION CONTAINED HEREIN CONSTITUTE UNPUBLISHED WORK OF tBP/ARCHITECTURE AND SHALL REMAIN THE PROPERTY OF tBP/ARCHITECTURE IN PERPETUITY. NO PART THEREOF SHALL BE REPRODUCED, DISCLOSED, DISTRIBUTED, SOLD, PUBLISHED OR OTHERWISE USED IN ANY WAY WITHOUT THE ADVANCED EXPRESS WRITTEN CONSENT OF tBP/ARCHITECTURE.

drawing title:

SITE PLAN

drawing no.:

AS-1

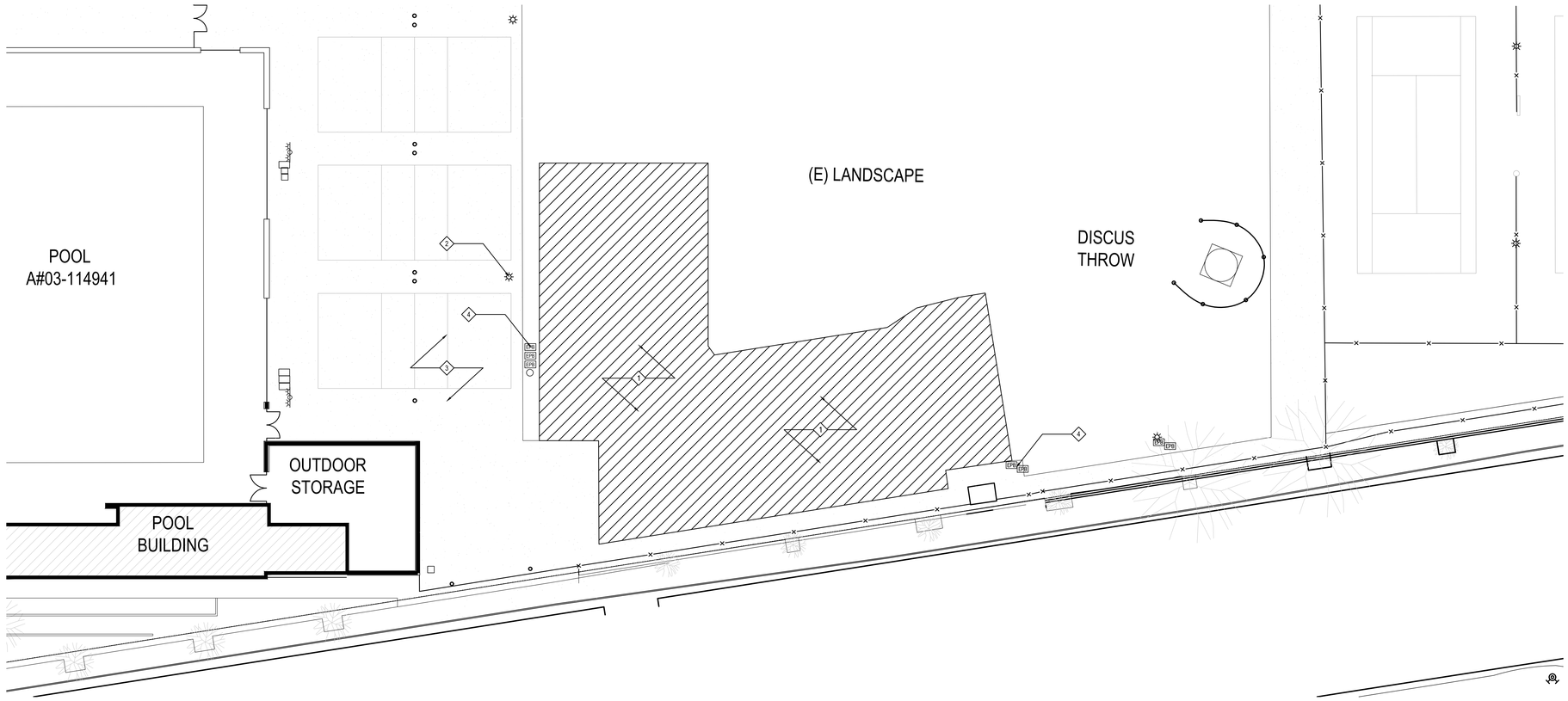


0 5' 10' 20' 40'

SITE DEMO PLAN (1)
SCALE: 1/16" = 1'-0"

NORTH

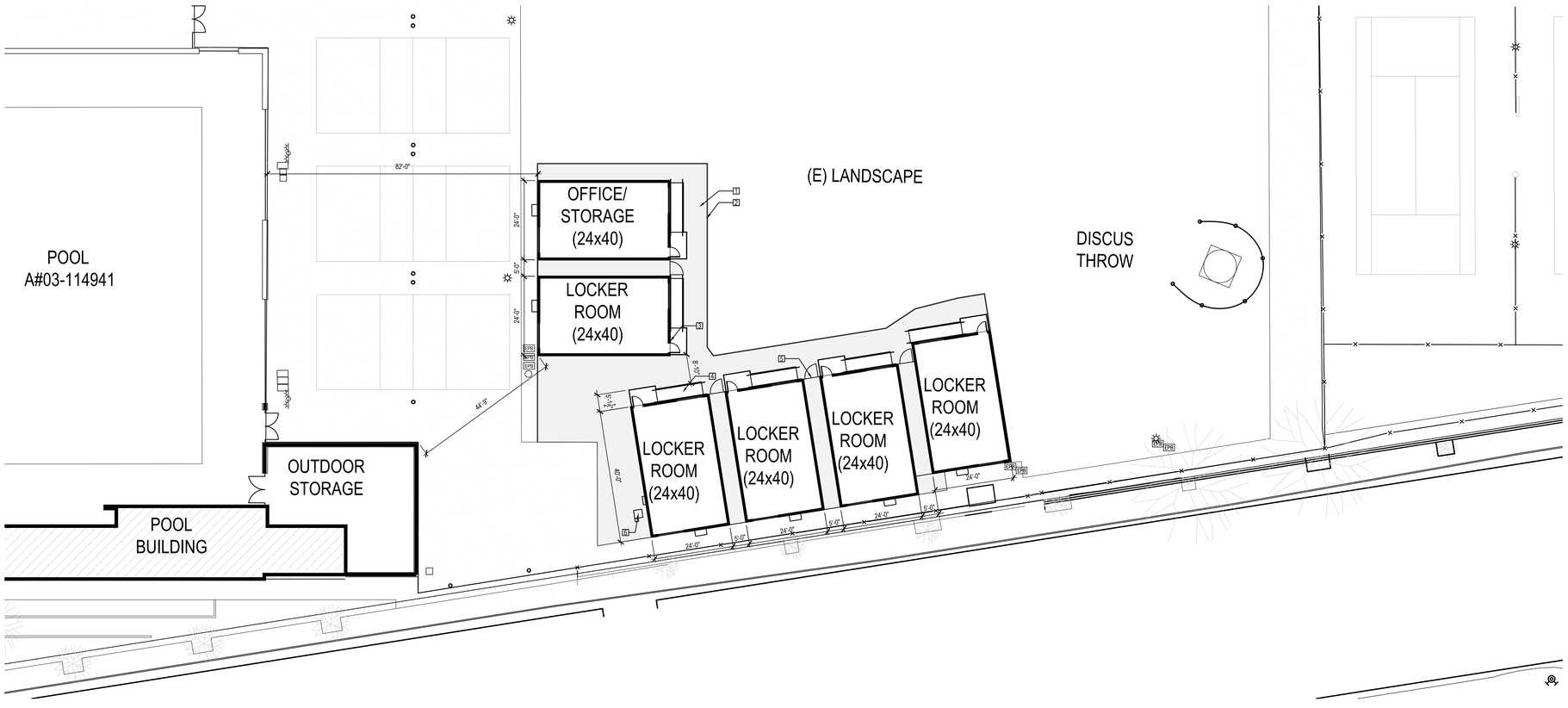


0 5' 10' 20' 40'

SITE PLAN (2)
SCALE: 1/16" = 1'-0"

NORTH

## GENERAL NOTES

1. LOCATIONS OF ALL UTILITIES SHOWN ARE APPROXIMATE. CONTRACTOR SHALL EXERCISE EXTREME CAUTION IN EXCAVATING AND TRENCHING TO AVOID INTERCEPTING EXISTING PIPING OR CONDUITS. THE ARCHITECT IS NOT RESPONSIBLE FOR THE LOCATION OF UNDERGROUND UTILITIES OR STRUCTURES WHETHER OR NOT SHOWN OR DETAILED AND INSTALLED BY OTHER CONTRACTS. THE CONTRACTOR SHALL IMMEDIATELY NOTIFY THE OWNER SHOULD SUCH UNIDENTIFIED CONDITIONS BE DISCOVERED. THESE DRAWING DO NOT INCLUDE NECESSARY COMPONENTS FOR CONSTRUCTION SAFETY.

2. VERIFY ALL EXISTING AND FINISH GRADES, DIMENSIONS AND SITE CONDITIONS BEFORE COMMENCING WORK AND REPORT ANY DISCREPANCIES TO THE ARCHITECT.

## DEMOLITION KEYNOTES

1. REMOVE PORTION (E) LANDSCAPE, SEE SHEET C1.00 FOR EXTENT OF REMOVAL
2. (E) LIGHTING FIXTURES TO REMAIN, PROTECT IN PLACE
3. (E) CONCRETE PAVING TO REMAIN, PROTECT IN PLACE
4. (E) PULL BOXES TO REMAIN, PROTECT IN PLACE

## NEW CONSTRUCTION KEYNOTES

1. (N) STABILIZED DECOMPOSED GRANITE, PER DETAIL 1/C2.00
2. (N) REDWOOD HEADER, PER DETAIL 2/C2.00
3. (N) BUILDING SIGN, SEE DETAIL 4/AS-3
4. (N) ALUMINUM MODULAR RAMP, PER PLAN 1/AS-3
5. (N) CHAINLINK FENCE, PER DETAIL 8/2.01, GATE PER DETAIL 16/2.01
6. (N) TRANSFORMER & DISTRIBUTION BOARD, SEE SHEET E-1.1


A# 03 - 124890
DIVISION OF THE STATE ARCHITECT
355 S. GRAND AVE, SUITE 2100
LOS ANGELES, CA 90071
ph: 213.897.3995 fx: 213.897.3159/0726
agency

tBP
architecture
planning
interiors

tBP/Architecture
4611 Teller Avenue
Newport Beach, CA 92660
ph: 949.673.0300
architect

consultant


# ARCADIA HIGH SCHOOL LOCKER ROOM INTERIM HOUSING

ARCADIA UNIFIED SCHOOL DISTRICT
180 CAMPUS DRIVE
ARCADIA, CALIFORNIA 91006

owner

tBP project number : 21196.00

file name:

drawn by: checked by:

date: 11/18/2024

| Rev: | date: | description: |
|---|---|---|
| | | |


THIS DRAWING AND THE DESIGNS, DEPICTIONS, IDEAS AND OTHER INFORMATION CONTAINED HEREIN CONSTITUTE UNPUBLISHED WORK OF tBP/ARCHITECTURE AND SHALL REMAIN THE PROPERTY OF tBP/ARCHITECTURE IN PERPETUITY. NO PART THEREOF SHALL BE REPRODUCED, DISCLOSED, DISTRIBUTED, SOLD, PUBLISHED OR OTHERWISE USED IN ANY WAY WITHOUT THE ADVANCED EXPRESS WRITTEN CONSENT OF tBP/ARCHITECTURE.


drawing title:
ENLARGED SITE PLAN

drawing no.:
AS-2

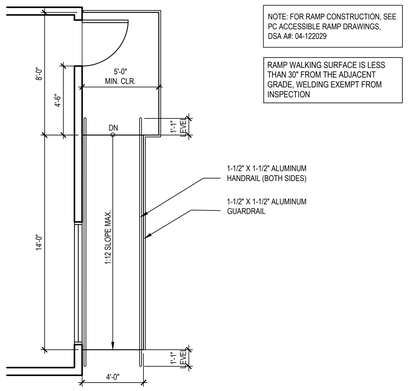


14' RAMP PLAN SCALE: 1/4" = 1'-0" 1

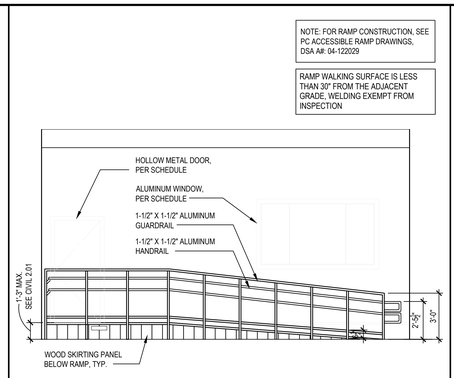


14' RAMP ELEVATION SCALE: 1/4" = 1'-0" 2

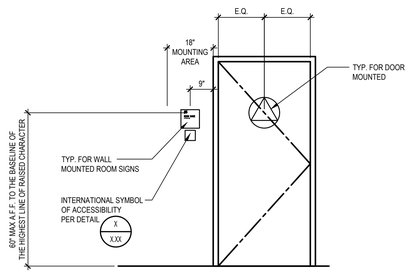


NOTES:

MOUNT SIGN ON THE WALL ADJACENT TO LATCH SIDE OF DOOR. WHERE THERE IS NO WALL SPACE ON LATCH SIDE OF DOOR, PLACE SIGNS ON NEAREST ADJACENT WALL, PREFERABLY ON THE RIGHT.

SIGNAGE LOCATION LEGEND SCALE: 1/2" = 1'-0" 3

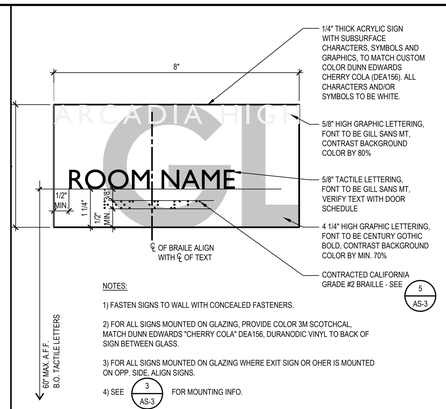


NOTES:

1) FASTEN SIGNS TO WALL WITH CONCEALED FASTENERS.

2) FOR ALL SIGNS MOUNTED ON GLAZING, PROVIDE COLOR 3M SCOTCHCAL, MATCH DUNN EDWARDS "CHERRY COLA" DEA156, DURANODIC VINYL TO BACK OF SIGN BETWEEN GLASS.

3) FOR ALL SIGNS MOUNTED ON GLAZING WHERE EXIT SIGN OR OHER IS MOUNTED ON OPP. SIDE, ALIGN SIGNS.

4) SEE 3/AS-3 FOR MOUNTING INFO.

ROOM NAME / NUMBER SIGN WITH INSERT SCALE: HALF 4

## TYPICAL SIGNAGE NOTES

1. TACTILE CHARACTER TYPE: TACTILE CHARACTERS ON SIGNS SHALL BE RAISED 1/32" MINIMUM AND SHALL BE SANS SERIF UPPERCASE CHARACTERS ACCOMPANIED BY CONTRACTED (GRADE 2) BRAILLE. CBC SECTION 11B-703.2, ITEM 1.
2. TACTILE CHARACTER SIZE: RAISED CHARACTERS SHALL BE A MINIMUM OF 5/8" AND A MAXIMUM OF 2" HIGH. CBC SECTION 11B-703.2, ITEM 5.
3. FINISH AND CONTRAST: CONTRAST BETWEEN CHARACTERS, SYMBOLS AND THEIR BACKGROUND MUST BE 70% MINIMUM AND HAVE A NON-GLARE FINISH. CBC SECTION 11B-703.5, ITEM 1
4. PROPORTIONS: RAISED CHARACTERS ON SIGNS SHALL BE SELECTED FROM FONTS WHERE THE WIDTH OF THE UPPERCASE LETTER "O" IS 60% MINIMUM AND 110% MAXIMUM OF THE HEIGHT OF THE UPPERCASE LETTER "I". STROKE THICKNESS OF THE UPPERCASE LETTER "I" SHALL BE 15% MAXIMUM OF THE HEIGHT OF THE CHARACTER. CBC SECTION 11B-703.2, ITEM 4.
5. BRAILLE: CONTRACTED (GRADE 2) BRAILLE SHALL BE USED WHEREVER BRAILLE IS REQUIRED IN OTHER PORTIONS OF THESE STANDARDS. DOTS SHALL BE 1/10" ON CENTERS IN EACH CELL WITH 2/10" SPACE BETWEEN CELLS, MEASURED FROM THE SECOND COLUMN OF DOTS IN THE FIRST CELL TO THE FIRST COLUMN OF DOTS IN THE SECOND CELL. DOTS SHALL BE RAISED A MINIMUM OF 1/40" ABOVE THE BACKGROUND. BRAILLE DOTS SHALL BE DOMED OR ROUNDED. CBC SECTION 11B-703.3, ITEM 1.

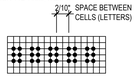


CALIFORNIA GRADE 2 BRAILLE SHALL BE USED WHEREVER BRAILLE IS REQUIRED. INDIVIDUAL BRAILLE DOTS SHALL EACH BE DISTINCT AND SEPARATE. EACH DOT SHALL BE ROUNDED OR DOMED IN LIEU OF SQUARE SIDED AND FLAT TOPPED.

6. MOUNTING HEIGHT AND LOCATION: SIGNS WITH RAISED CHARACTERS AND BRAILLE SHALL BE LOCATED 48" MINIMUM TO THE BASELINE OF THE LOWEST LINE OF BRAILLE AND 60" MAXIMUM TO THE BASELINE OF THE HIGHEST LINE OF RAISED CHARACTERS ABOVE THE FINISH FLOOR OR GROUND SURFACE. MOUNTING LOCATION SHALL BE DETERMINED SO THAT A PERSON MAY APPROACH WITHIN 3" OF SIGNAGE WITHOUT ENCOUNTERING PROTRUDING OBJECTS OR STANDING WITHIN THE SWING OF A DOOR. CBC SECTION 11B-703.4, ITEM 1.

SIGNAGE GENERAL NOTES SCALE: NONE 5


agency
A# 03 - 124890
DIVISION OF THE STATE ARCHITECT
355 S. GRAND AVE, SUITE 2100
LOS ANGELES, CA 90071
ph: 213.897.3995 fx: 213.897.3159/0726

architecture
planning
interiors

tBP/Architecture
4611 Teller Avenue
Newport Beach, CA 92660
ph: 949.673.0300
architect

consultant


ARCADIA HIGH SCHOOL
LOCKER ROOM INTERIM HOUSING

ARCADIA UNIFIED SCHOOL DISTRICT
180 CAMPUS DRIVE
ARCADIA, CALIFORNIA 91006

owner

tBP project number : 21196.00

file name:

drawn by: checked by:

date: 11/18/2024

| Rev: | date: | description: |
|---|---|---|
| | | |


THIS DRAWING AND THE DESIGNS, DEPICTIONS, IDEAS AND OTHER INFORMATION CONTAINED HEREIN CONSTITUTE UNPUBLISHED WORK OF tBP/ARCHITECTURE AND SHALL REMAIN THE PROPERTY OF tBP/ARCHITECTURE IN PERPETUITY. NO PART THEREOF SHALL BE REPRODUCED, DISCLOSED, DISTRIBUTED, SOLD, PUBLISHED OR OTHERWISE USED IN ANY WAY WITHOUT THE ADVANCED EXPRESS WRITTEN CONSENT OF tBP/ARCHITECTURE.


drawing title:

RAMP PLAN

drawing no.:

AS-3

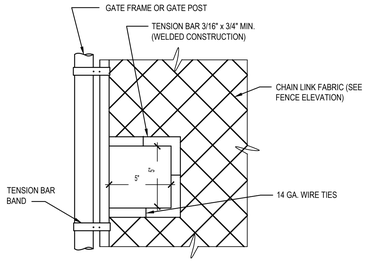


DETAIL OF CUTOUT FOR CHAIN AND LOCK

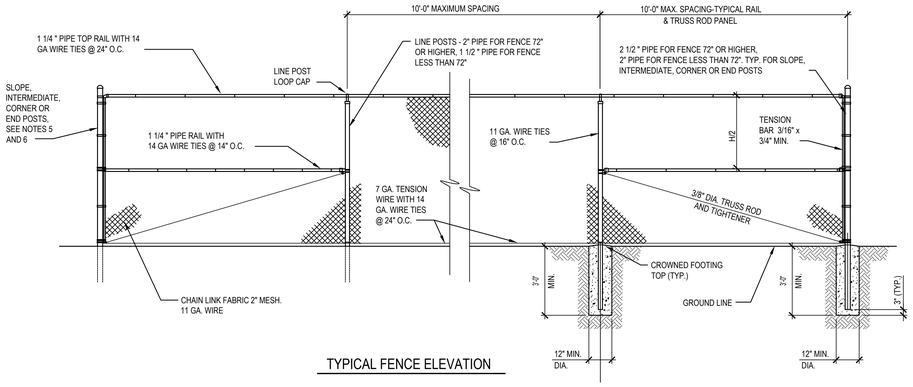


TYPICAL FENCE ELEVATION

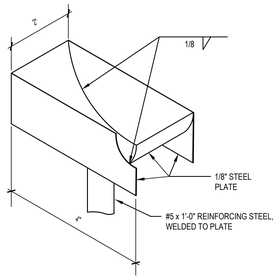


PLUNGER ROD CUP DETAIL

## NOTES

1. FABRIC SHALL HAVE KNUCKLED FINISH ON BOTH TOP AND BOTTOM EDGES.
2. ALL GATE HINGES SHALL BE HEAVY DUTY MALLEABLE IRON OR STEEL, INDUSTRIAL SERVICE TYPE AND NOT LESS THAN 3-INCHES IN WIDTH.
3. ALL TIES SHALL BE GALVANIZED STEEL.
4. TOP CAP SHALL BE SECURED TO POST USING 1/4-INCH RIVET.
5. CORNER OR SLOPE POSTS SHALL BE INSTALLED WHEN THE CHANGE IN DEFLECTION ANGLE IS 30 DEGREES OR MORE AT CORNER OR SLOPE POINTS. CONSTRUCT SLOPE POSTS AS THOUGH THEY WERE CORNER POSTS.
6. INTERMEDIATE POSTS SHALL BE PROVIDED WHEN THE DISTANCE BETWEEN CORNER OF SLOPE POSTS EXCEEDS 300 FEET. THEY SHALL BE CONSTRUCTED AS THOUGH THEY WERE CORNER OR SLOPE POSTS.
7. THREADS OF ALL 3/8-INCH ROUND TRUSS RODS SHALL BE PEENDED AFTER INSTALLATION.
8. WHEN TOP RAIL IS OMITTED BY PLAN, PROVIDE 7-GAGE TENSION WIRE WITH 11-GAGE FABRIC TIES OR HOG RINGS SPACED AT 24-INCH INTERVALS.
9. GATES SHALL BE PROVIDED WITH A COMBINATION SPRING LATCH AND PLUNGER ROD, APPROVED BY THE ENGINEER.
10. TENSION WIRE SHALL BE SECURELY FASTENED TO THE TERMINAL POSTS AND BE TAUT AND FREE OF SAG.
11. THE FABRIC SHALL BE PLACED ON THE OUTWARD FACING SIDE OF THE POSTS, STRETCHED TAUT, AND FASTENED SECURELY.

GATE EXEMPT FROM DSA STRUCTURAL REVIEW PER DSA IR-22 ITEM #12

GATE POST FOOTING SCHEDULE

| GATE WIDTH | | FOOTING MIN. DEPTH, D | |
|---|---|---|---|
| SINGLE GATE | DOUBLE GATE | H TO 6' | H 6' TO 8' |
| TO 8' | TO 16' | 3'-0" | 3'-0" |

GATE POST SCHEDULE

| FENCE HEIGHT (H) | GATE WIDTH | NOMINAL SIZE OF PIPE INCHES | ACTUAL O.D. INCHES | WEIGHT PER FOOT POUNDS |
|---|---|---|---|---|
| 6 FEET TO 8 FEET INCLUSIVE | SINGLE GATES 6 FEET OR LESS AND DOUBLE GATES 12 FEET OR LESS | 2 1/2 | 2.875 | 5.79 |
| 6 FEET TO 8 FEET INCLUSIVE | SINGLE GATES 6 TO 12 FEET AND DOUBLE GATES 12 TO 24 FEET | 3 1/2 | 4.00 | 9.11 |
| 6 FEET TO 8 FEET INCLUSIVE | SINGLE GATES 12 TO 18 FEET AND DOUBLE GATES 24 TO 36 FEET | 6 | 6.625 | 18.97 |

CHAIN LINK FENCE AND GATES

SCALE: 3/8" = 1'-0"

8

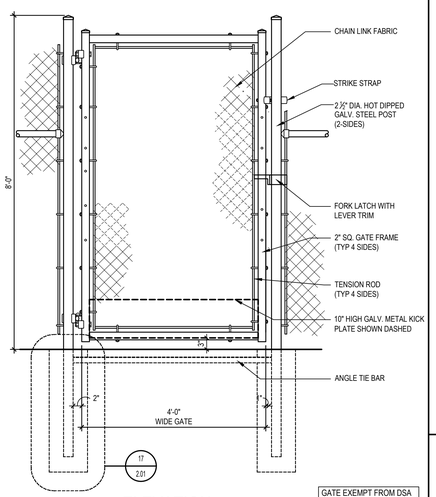


ELEVATION

GATE EXEMPT FROM DSA STRUCTURAL REVIEW PER DSA IR-22 ITEM #12

GATE W/ PANIC HARDWARE

SCALE: 3/4" = 1'-0"

16

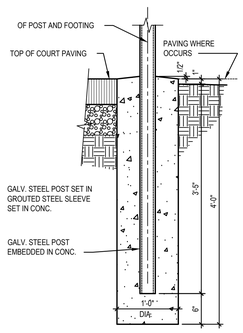


CHAIN LINK FENCE POST FOOTINGS

SCALE: 1" = 1'-0"

17

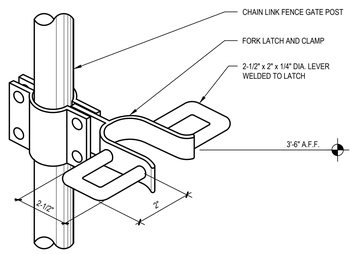


FORK LATCH WITH LEVER TRIM

SCALE: N.T.S.

18


A# 03 - 124890
DIVISION OF THE STATE ARCHITECT
355 S. GRAND AVE, SUITE 2100
LOS ANGELES, CA 90071
ph: 213.897.3995 fx: 213.897.3159/0726
agency

tBP architecture planning interiors
tBP/Architecture
4611 Teller Avenue
Newport Beach, CA 92660
ph: 949.673.0300
architect

consultant


ARCADIA HIGH SCHOOL
LOCKER ROOM INTERIM HOUSING

ARCADIA UNIFIED SCHOOL DISTRICT
180 CAMPUS DRIVE
ARCADIA, CALIFORNIA 91006

owner

tBP project number : 21196.00

file name:

drawn by: checked by:

date: 11/18/2024

| Rev: | date: | description: |
|---|---|---|
| | | |


THIS DRAWING AND THE DESIGNS, DEPICTIONS, IDEAS AND OTHER INFORMATION CONTAINED HEREIN CONSTITUTE UNPUBLISHED WORK OF tBP/ARCHITECTURE AND SHALL REMAIN THE PROPERTY OF tBP/ARCHITECTURE IN PERPETUITY. NO PART THEREOF SHALL BE REPRODUCED, DISCLOSED, DISTRIBUTED, SOLD, PUBLISHED OR OTHERWISE USED IN ANY WAY WITHOUT THE ADVANCED EXPRESS WRITTEN CONSENT OF tBP/ARCHITECTURE.


drawing title:

SITE DETAILS

drawing no.:

2.01

FBA Engineering / Plot Date: 2/25/2025 4:12 PM / Plotted by: Don Fleischman / Drawing Location: I:\212\328\E0-1 Symbol List, General Notes, Fixture Schedule and Details.dwg

## GENERAL NOTES

1. PORTIONS OF THESE PLANS HAVE BEEN DERIVED FROM INFORMATION TAKEN FROM ORIGINAL ELECTRICAL PLANS. THE INTENT OF THESE PLANS IS TO PROVIDE COMPLETE AND OPERABLE SYSTEMS.
2. IT IS THE CONTRACTOR'S RESPONSIBILITY TO VISIT THE SITE AND BECOME THOROUGHLY FAMILIAR WITH ALL THE FEATURES OF THE BUILDING AND SITE WHICH WAY AFFECT THE PROPER PERFORMANCE OF THIS WORK.
3. IT IS THE CONTRACTOR'S RESPONSIBILITY TO REFER TO THE DRAWINGS OF OTHER TRADES FOR ADDITIONAL DETAILS AND REQUIREMENTS WHICH AFFECT THE PROPER PERFORMANCE OF THIS WORK.
4. RACEWAY ROUTING, DIMENSIONS, AND EQUIPMENT LOCATIONS ARE APPROXIMATE. CONTRACTOR SHALL FIELD VERIFY ALL DIMENSIONS AND EXACT RACEWAY ROUTING TO CONFORM TO FIELD CONDITIONS.
5. ELECTRICAL DOWN TIME MUST BE APPROVED BY THE COLLEGE. CONTRACTOR SHALL MAKE PROVISIONS TO ACCOMPLISH THE WORK OF THIS CONTRACT WITHOUT UNDUE INTERFERENCE WITH COLLEGE OPERATIONS.
6. ALL EQUIPMENT DEVICES, CONDUIT FITTINGS, JUNCTION BOXES, AND CONSTRUCTION LOCATED OUTDOORS SHALL BE WEATHERPROOF.
7. ALL SIGNAL AND FIRE ALARM SYSTEMS TERMINATIONS MADE IN JUNCTION BOXES SHALL BE EXECUTED USING TERMINAL BLOCKS.
8. SIGNAL AND/OR FIRE ALARM SYSTEMS SPLICES ARE NOT PERMITTED IN UNDERGROUND PULLBOXES.
9. ALL ELECTRICAL EQUIPMENT INCLUDING PANELS, OUTLET BOXES, CONDUITS, ETC. SHALL BE ANCHORED TO BUILDING STRUCTURE. ANCHORING SHALL BE DESIGNED FOR 1.0 GRAVITY LATERAL ACCELERATION OF THE EQUIPMENT.
10. VERIFY THE EXACT LOCATION OF THE RELOCATABLE BUILDING PANELBOARD WITH THE BUILDING MANUFACTURER PRIOR TO ROUGH-IN.
11. WHERE POSSIBLE ALL RACEWAYS SHALL BE ROUTED CONCEALED IN WALLS AND/OR ABOVE ACCESSIBLE CEILING SPACE.
12. UNLESS SPECIFICALLY SHOWN ON THESE PLANS NO STRUCTURAL MEMBER SHALL BE CUT NEITHER DRILLED NOR NOTCHED WITHOUT PRIOR WRITTEN AUTHORIZATION FROM THE STRUCTURAL ENGINEER AND THE DIVISION OF THE STATE ARCHITECT.
13. PROVIDE OZ COMPANY TYPE "DX" EXPANSION/DEFLECTION FITTINGS WITH BONDING JUMPER ON ALL CONDUITS AT ALL BUILDING EXPANSION OR SEISMIC JOINT CROSSINGS.

## PERFORMANCE NOTES

1. VISIT THE SITE PRIOR TO BID AND INVESTIGATE THE EXISTING FIRE ALARM, TELEPHONE, INTRUSION DETECTION, EMS, CLOCK, INTERCOM/PA, TELEVISION AND DATA SYSTEMS EQUIPMENT ON CAMPUS. COORDINATE WITH THE EXISTING SYSTEMS MANUFACTURERS FOR ALL REQUIRED EQUIPMENT MODIFICATIONS, CONDUIT, WIRING AND UPGRADING REQUIRED TO EXTEND THE EXISTING SYSTEMS TO THE NEW MODULAR BUILDINGS. INCLUDE ALL COSTS IN BID. ALL NEW COMPONENTS SHALL BE COMPATIBLE WITH THE EXISTING SYSTEM.
2. PAINT ALL EXPOSED RACEWAYS TO MATCH SURROUNDING SURFACE COLOR.
3. PROVIDE GROUNDING SYSTEM PER DETAIL A/E0-2. WHERE METAL RAMPS OR RAILWAYS ARE USED PROVIDE 1#2 BONDING ELECTRODE FROM THE RAMPS AND RAILWAYS TO THE STRUCTURAL STEEL MEMBER OF THE BUILDING.
4. PROVIDE WEATHERPROOF SEALANT AROUND PRECAST CONCRETE PULL BOX COVERS AFTER WORK IS COMPLETED WITHIN BOX.
5. PROVIDE APPROVED WEATHERPROOF SEALANT AROUND ALL WALL PENETRATIONS. SEAL IN A MANNER ACCEPTABLE TO THE ARCHITECT.
6. PROVIDE CORE DRILLING OF ALL STRUCTURES AS REQUIRED FOR RACEWAY ROUTING AND DISCOVERED SITE CONDITIONS.
7. RECONNECT EXISTING CIRCUITS FOR EQUIPMENT THAT IS TO REMAIN IF DISRUPTED BY WORK PERFORMED UNDER THIS CONTRACT. MAINTAIN CONTINUITY OF ALL FEED THRU WIRING.
8. WHERE NEW CONDUCTOR(S)/CABLING IS SPECIFIED IN EXISTING CONDUITS CONTAINING EXISTING WIRING THE CONTRACTOR SHALL REMOVE ENOUGH OF THE EXISTING WIRING TO PULL IN NEW PLUS REPLACEMENT OF EXISTING REMOVED.
9. EXISTING TELEPHONE(S), SPEAKERS, DATA OUTLETS, AUDIO/VISUAL SYSTEMS AND CLOCKS IN MODULAR BUILDINGS SHALL REMAIN, PROTECT IN PLACE. PROVIDE NEW CONNECTIONS AS INDICATED ON DRAWINGS.

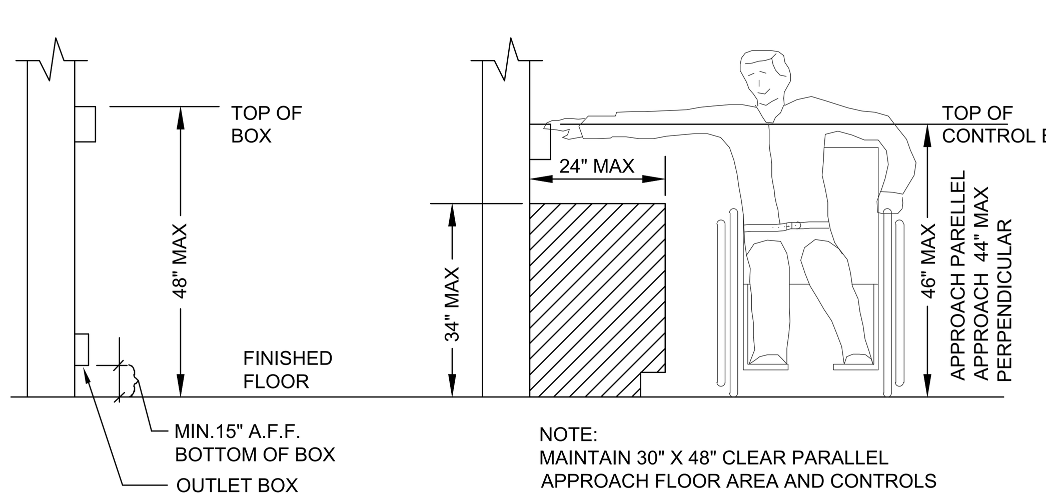


ELECTRICAL CONTROLS, SWITCHES AND RECEPTACLES USED BY OCCUPANT SHALL BE LOCATED NO MORE THAT 48" MEASURED FROM THE TOP OF THE DEVICES AND NO LESS THAN 15" MEASURED FROM THE BOTTOM OF THE DEVICES TO THE FINISH FLOOR OR PLATFORM.

MOUNTING HEIGHT OVER CONSTRUCTION | SCALE: N.T.S. | 1

## FIRE WATCH NOTES

**PURPOSE:** THIS INTERPRETATION OF REGULATIONS (IR) CLARIFIES CODE REQUIREMENTS BASED ON THE CALIFORNIA BUILDING CODE (CBC), CALIFORNIA FIRE CODE (CFC) AND CALIFORNIA CODE OF REGULATIONS (CCR) TITLE 19 AS RELATED TO NON-OPERABLE FIRE PROTECTION/LIFE SAFETY SYSTEMS REQUIRING A FIRE WATCH.

**BACKGROUND:** 2016 CFC SECTION 901.7 AND CCR TITLE 19 SECTION 1.14 REQUIRE FIRE DETECTION AND ALARM SYSTEMS, FIRE HYDRANT SYSTEMS, EXTINGUISHING SYSTEMS, MECHANICAL SMOKE EXHAUST SYSTEMS, AND SMOKE AND HEAT VENTS TO BE MAINTAINED IN AN OPERATIVE CONDITION AT ALL TIMES. CFC SECTION 901.7 DIRECTS THAT WHEN A FIRE PROTECTION SYSTEM IS OUT OF SERVICE, THE FIRE DEPARTMENT AND FIRE CODE OFFICIAL BE NOTIFIED IMMEDIATELY AND THE SCHOOL DISTRICT SHALL ESTABLISH A FIRE WATCH. FOR PURPOSES OF APPLICATION, THE DIVISION OF THE STATE ARCHITECT (DSA) IS THE FIRE CODE OFFICIAL.

SCOPE: DURING THE COURSE OF A CONSTRUCTION PROJECT UNDER THE JURISDICTION OF DSA, DSA IS THE FIRE CODE OFFICIAL. THE SCOPE OF THIS IR IS CONFINED TO THOSE SITUATIONS WHERE DSA HAS JURISDICTION. GENERAL: IT IS THE INTENT OF THE CFC THAT FIRE PROTECTION/LIFE SAFETY SYSTEMS IN SCHOOLS BE MAINTAINED AND FULLY OPERABLE AT ALL TIMES. IN THE EVENT THAT A PUBLIC SCHOOL (GRADES K-12 OR COMMUNITY COLLEGES) WITHIN THE JURISDICTION OF DSA HAS A FIRE PROTECTION/LIFE SAFETY SYSTEM THAT IS NOT OPERATING IN A DEPENDABLE MANNER, THAT CAMPUS, OR THE AFFECTED PORTION OF THE CAMPUS, SHALL BE PROVIDED A “FIRE WATCH.”

A FIRE WATCH IS INTENDED AS A TEMPORARY ALTERNATE TO A FIRE PROTECTION/LIFE SAFETY SYSTEM AND ALLOWS A BUILDING TO BE TEMPORARILY OCCUPIED WHILE THE FIRE PROTECTION SYSTEM IS OUT OF SERVICE. THE PURPOSE OF A FIRE WATCH IS TO PROTECT HUMAN LIFE AND PROPERTY AND TRANSMIT AN IMMEDIATE ALARM TO THE BUILDING OCCUPANTS AND FIRE DEPARTMENT. 2016 CFC, CHAPTER 9, SECTION 901.7, DIRECTS THAT WHERE UTILIZED, FIRE WATCHES SHALL BE PROVIDED WITH AT LEAST ONE APPROVED MEANS FOR NOTIFYING THE FIRE DEPARTMENT. THE SOLE DUTY OF THE FIRE WATCH SHALL BE DEDICATED TO PERFORMING CONSTANT PATROLS OF THE PROTECTED PREMISES AND KEEP WATCH FOR EVIDENCE OF FIRES SUCH AS SMOKE OR FLAMES.

1. **REQUIRED FIRE WATCH:** WHEN, AS PART OF AN ALTERATION OR MODERNIZATION PROJECT OR CONSTRUCTION OF A NEW BUILDING A FIRE PROTECTION/LIFE SAFETY SYSTEM IS PLACED OUT OF SERVICE AND AFFECTS ANY OCCUPIED PORTION OF AN EXISTING BUILDING UNDERGOING RENOVATION OR OCCUPIED BUILDINGS OR PORTIONS OF THE CAMPUS, THEN THE SCHOOL DISTRICT, DSA, AND THE ARCHITECT/ENGINEER IN GENERAL RESPONSIBLE CHARGE OF THE CONSTRUCTION PROJECT SHALL BE NOTIFIED IMMEDIATELY BY THE PROJECT INSPECTOR. IT WILL BE THE SCHOOL DISTRICT'S RESPONSIBILITY TO ESTABLISH, INSTRUCT AND MAINTAIN FIRE WATCH PERSONNEL IN/AT THE AFFECTED BUILDING(S). WHERE A FIRE ALARM SYSTEM IS OUT OF SERVICE, WARNING SIGNS SHALL BE POSTED AT ALL ENTRANCES TO ANY BUILDING TO INFORM THE OCCUPANTS (SEE PARAGRAPH 1.3).

MODERNIZATIONS OF EXISTING BUILDINGS OR CONSTRUCTION OF NEW BUILDINGS THAT ARE NOT OCCUPIED BY THE PUBLIC, STAFF OR STUDENTS DURING CONSTRUCTION, SHALL NOT REQUIRE A FIRE WATCH AS LONG AS THE CONSTRUCTION EFFORTS DO NOT AFFECT OTHER OCCUPIED AREAS OF THE BUILDING.

**1.1 FIRE WATCH PLAN:** THE SCHOOL DISTRICT SHALL DEVELOP A FIRE WATCH PLAN WITH THE APPLICABLE BUILDING(S) IDENTIFIED ON A SITE AND BUILDING PLAN, AND COORDINATE WITH THE LOCAL FIRE DEPARTMENT. WHEN REQUESTED, THE SCHOOL DISTRICT SHALL PROVIDE A COPY OF THE FIRE WATCH PLAN TO THE DSA FIELD ENGINEER FOR THE REGION IN WHICH THE CONSTRUCTION IS TAKING PLACE. A COPY OF THE FIRE WATCH PLAN SHALL BE MADE AVAILABLE TO THE LOCAL FIRE AUTHORITY UPON REQUEST.

**1.2 REQUIREMENTS OF A FIRE WATCH PLAN:**

- INCLUDE A PROCEDURE FOR NOTIFYING THE FIRE DEPARTMENT AND OTHER CONTACTS DEEMED NECESSARY BY THE SCHOOL DISTRICT FOR NOTIFICATION.
- INDICATE AREA(S) TO BE PATROLLED AND LOCATIONS OF PORTABLE FIRE EXTINGUISHERS, MEANS OF EGRESS AND AREAS OF SPECIAL HAZARDS. IF A KITCHEN HOOD EXTINGUISHING SYSTEM IS INCLUDED IN THE NON-OPERABLE ALARM SYSTEM, THE KITCHEN SHALL BE INCLUDED IN THE PATROL ROUTE DURING COOKING ACTIVITIES.
- THE METHOD OF SOUNDING AN ALARM SHALL BE DESCRIBED TO INITIATE THE EVACUATION OF BUILDING(S). THE MANNER OF ALARM SHALL BE CONVEYED TO STAFF AND STUDENTS.
- DETERMINE AT LEAST ONE MEANS OF DIRECT COMMUNICATION WITH THE LOCAL FIRE DEPARTMENT; A TELEPHONE/CELL PHONE IS ACCEPTABLE PROVIDED THAT A TEST RUN OF THE DESIGNATED ROUTES VERIFIES SIGNAL STRENGTH OF THE CELL PHONE AT ALL LOCATIONS.

**1.3 POSTING:** SIGNS SHALL STATE,

“WARNING, FIRE ALARM SYSTEM IS CURRENTLY INOPERABLE.

A FIRE WATCH IS BEING CONDUCTED.

FIRE WATCH PERSONNEL WILL NOTIFY YOU BY

(STATE MEANS OF NOTIFICATION.)

IN THE EVENT THAT BUILDING EVACUATION IS REQUIRED.”

**1.4 FIRE WATCH PERSONNEL:** THE SCHOOL DISTRICT SHALL DESIGNATE THE FIRE WATCH PERSONNEL WHO ARE FAMILIAR WITH AND ARE ABLE TO PERFORM THE DUTIES AS DESCRIBED IN THE FIRE WATCH PLAN. THE FIRE WATCH PERSONNEL SHALL NOT PERFORM FIREFIGHTING DUTIES BEYOND THE SCOPE OF AN ORDINARY CITIZEN. (USE OF PORTABLE FIRE EXTINGUISHERS IS PERMITTED, PROVIDED PROPER TRAINING IN THE USE OF FIRE EXTINGUISHERS HAS BEEN RECEIVED AND FIRE WATCH PERSONNEL FEEL CONFIDENT IN THEIR ABILITY TO SUPPRESS A FIRE.)

**1.5 THE FIRE WATCH PERSONNEL DUTIES:** DUTIES SHALL INCLUDE, BUT NOT BE LIMITED TO, THE FOLLOWING:

- FIRE WATCH PERSONNEL ARE TO BE THOROUGHLY FAMILIAR WITH FACILITIES AND AREAS THEY ARE PATROLLING. ROUTE SHALL BE A ROVING AND CONTINUOUS OBSERVATION OF THE ENTIRE FACILITY AT LEAST ONCE EACH HOUR. WHERE HAZARDOUS OPERATIONS (WELDING, USE OF OPEN FLAME) ARE OCCURRING, THE FREQUENCY SHALL BE EVERY THIRTY MINUTES.
- IDENTIFY ANY FIRE, LIFE OR PROPERTY HAZARDS TO APPROPRIATE CONTACT PER THE FIRE WATCH PLAN.

IF A FIRE IS DISCOVERED, THE FIRE WATCH SHALL IMMEDIATELY:

- NOTIFY THE FIRE DEPARTMENT.
- NOTIFY OCCUPANTS OF THE FACILITY OF THE NEED TO EVACUATE BY A PREDESCRIBED SIGNAL AS OUTLINED IN 1.2 ABOVE. IF THE HORNS OR PUBLIC ADDRESS FUNCTION OF THE ALARM SYSTEM ARE STILL FUNCTIONAL, USE THEM TO ASSIST WITH EVACUATION OF THE BUILDING.

- FOLLOW THE PROVISIONS OF THE FIRE WATCH PLAN.
- HAVE KNOWLEDGE OF THE LOCATION AND USE OF FIRE PROTECTION EQUIPMENT SUCH AS FIRE EXTINGUISHERS.
- BE FAMILIAR WITH AND MANUALLY ACTIVATE FIRE DOOR RELEASES AND/OR STAGE ROOF VENTS OR STAGE FIRE CURTAIN AS NECESSARY WHEN, IN THE JUDGMENT OF THE FIRE WATCH PERSONNEL, THOSE PORTIONS OF THE BUILDING ARE AFFECTED.
- UPDATE THE FIRE WATCH LOG AT THE CONCLUSION OF EACH FIRE WATCH ROUTE.

**1.6 FIRE WATCH LOG:** A FIRE WATCH LOG SHOULD BE MAINTAINED AT THE FACILITY AND AVAILABLE TO THE LOCAL FIRE DEPARTMENT AND DSA FIELD STAFF AT ALL TIMES DURING THE FIRE WATCH. THE SCHOOL DISTRICT SHALL DETERMINE THE SPECIFIC HOURS THE FIRE WATCH WILL BE ON DUTY. AT A MINIMUM, THE FIRE WATCH SHALL BE ON DUTY DURING ALL PERIODS WHEN THE BUILDING(S) IS/ARE OCCUPIED.

THE LOG SHALL CONTAIN A DIRECTORY OF CONTACT NAMES, TELEPHONE NUMBERS AND OTHER INFORMATION NECESSARY FOR MAKING EMERGENCY CALLS.

THE LOG SHALL INDICATE THE FOLLOWING:

- ADDRESS OF THE FACILITY.
- NAME OF THE PERSON CONDUCTING THE FIRE WATCH.
- TIMES THAT THE PATROL HAS COMPLETED EACH TOUR OF THE FACILITY.
- RECORD OF COMMUNICATION(S) TO THE FIRE DEPARTMENT.

2. **TERMINATION OF FIRE WATCH:** WHERE THE FIRE WATCH IS REQUIRED DUE TO A FIRE ALARM SYSTEM INSTALLATION OR MODIFICATION, THE COMPLETED OR REPAIRED FIRE ALARM SYSTEM SHALL BE TESTED PER NATIONAL FIRE PROTECTION (NFPA) STANDARD 72 AND THE SYSTEM MANUFACTURER'S INSTALLATION REQUIREMENTS. TESTING AND INSPECTION OF THE SYSTEM SHALL BE DOCUMENTED UTILIZING THE NFPA 72 TESTING AND INSPECTION FORM. THE PROJECT INSPECTOR SHALL SUBMIT TO THE SCHOOL DISTRICT, A/E IN GENERAL RESPONSIBLE CHARGE, THE LOCAL FIRE AUTHORITY AND DSA, AS APPLICABLE, COPIES OF THE NFPA 72 “RECORD OF COMPLETION.”

- IT IS THE SCHOOL DISTRICT'S RESPONSIBILITY TO CANCEL THE FIRE WATCH ONCE THE FIRE PROTECTION SYSTEM HAS BEEN DEEMED OPERABLE AS COMMUNICATED BY THE PROJECT INSPECTOR.
- ONCE THE FIRE WATCH HAS BEEN CANCELLED, THE PROJECT INSPECTOR SHALL:
  - NOTIFY THE LOCAL FIRE DEPARTMENT.
  - NOTIFY DSA FIELD ENGINEER.
  - VERIFY REMOVAL OF SIGNS.

## SYMBOL LIST

(ALL SYMBOLS NOT NECESSARILY USED ON THESE DRAWINGS)
ALL SYMBOL DESCRIPTIONS ARE SUBJECT TO MODIFICATION AS NOTED ON THE DRAWINGS.
VERIFY EXACT LOCATIONS AND HEIGHTS OF OUTLETS WITH ARCHITECTURAL INTERIOR ELEVATIONS PRIOR TO ROUGH-IN.

| Symbol | Description |
|---|---|
| Ⓙ• | JUNCTION BOX, FLUSH WALL MOUNTED, +18". |
| Ⓙ | JUNCTION BOX CONCEALED ABOVE ACCESSIBLE CEILING AREA OR MOUNTED ON ROOF. |
| ↘Ⓙ | INDICATES CONNECTION TO EQUIPMENT AS REQUIRED, TYPICAL. |
| A / E-1 | PANELBOARD, ADJACENT LINE INDICATES PANEL FRONT. ADJACENT BALLOON INDICATES PANEL DESIGNATION "A", SEE DRAWING E-1 FOR PANEL SCHEDULE. |
| | TERMINAL CABINET. ADJACENT LINE INDICATES CABINET FRONT. |
| | EQUIPMENT CABINET. ADJACENT LINE INDICATES CABINET FRONT. |
| •○ | LIGHTING FIXTURE, SURFACE OR FLUSH MOUNTED AS INDICATED ON FIXTURE SCHEDULE, ON WALL MOUNTED OUTLET BOX, +90". STEM INDICATES WALL MOUNTED OUTLET BOX, TYPICAL. |
| ● ■ | OUTLET ON EMERGENCY LIGHTING CIRCUIT. |
| S 2, P a, b | SINGLE POLE TOGGLE SWITCH, ON FLUSH WALL MOUNTED OUTLET BOX, +45". INSTALL MULTIPLE SWITCHES UNDER COMMON COVER PLATE. SUBSCRIPT OR SUPERSCRIPT AT SWITCH SYMBOL INDICATES THE FOLLOWING:<br>2 - DOUBLE POLE 4 - FOUR WAY M - MANUAL MOTOR STARTERS<br>3 - THREE WAY P - PILOT LIGHT K - KEY OPERATED<br>R - SPDT MOMENTARY CONTACT RELAY SWITCH V - VAPOR PROOF<br>a,b,c,d, ETC. - MULTIPLE SWITCHES WITH IDENTIFICATION OF OUTLET CONTROLLED. |
| 2 / 100 | FIXTURE SCHEDULE DESIGNATION: "2" INDICATES FIXTURE TYPE, "100" INDICATES FIXTURE TOTAL WATTAGE. |
| C / E-2 | DETAIL CALLOUT, "C" INDICATES DETAIL, "E-2" INDICATES DRAWING WHERE DETAIL OCCURS. |
| ① → | PLAN NOTE CALLOUT. REFER TO CORRESPONDING NOTE ON DRAWING WHERE CALLOUT OCCURS. |
| ——— | CONDUIT, INSTALLED CONCEALED IN WALL OR IN CEILING SPACE.<br>1/2" C - 2 #12, 1#12(GRD) — 3/4" C - 6 #12, 1#12(GRD)<br>1/2" C - 3 #12, 1#12(GRD) — 1" C - 7 #12, 1#12(GRD)<br>3/4" C - 4 #12, 1#12(GRD) — 1" C - 8 #12, 1#12(GRD)<br>3/4" C - 5 #12, 1#12(GRD) — 1 1/4" C - 9 #12, 1#12(GRD) |
| — — — | CONDUIT, INSTALLED CONCEALED IN OR UNDER FLOOR OR BELOW GRADE, 3/4"C. MINIMUM. |
| - - - - - - - | CONDUIT, INSTALLED EXPOSED. |
| B-5, 7, 9 | HOMERUN TO PANEL "B" FOR CIRCUITS 5, 7, 9 WITH COMMON NEUTRAL |
| — — —\| | UNDERGROUND CONDUIT STUBOUT, STUB 5'-0" FROM BUILDING OR WALKWAY, CAP, MARK AND RECORD. |
| \|———\| | INDICATES CONDUIT SLEEVE(S) THROUGH WALL ABOVE THE CEILING. NUMBER AND SIZE OF CONDUITS AS NOTED. |
| — — E — — | EXISTING CONDUIT. |
| —— F —— | FIRE ALARM SYSTEM - 3/4"C. WITH FIRE ALARM SYSTEM CONDUCTORS AS SPECIFIED. |
| —— P —— | PUBLIC ADDRESS SYSTEM - 3/4"C., WITH CONDUCTORS AS SPECIFIED.<br>P2 - 3/4"C WITH CONDUCTORS AS SPECIFIED. |
| —— TV —— | TELEVISION SYSTEM - 1"C. WITH CONDUCTORS AS SPECIFIED. |
| —— ID —— | INTRUSION DETECTION SYSTEM - 3/4"C. WITH CONDUCTORS AS SPECIFIED. |
| WP S | WEATHERPROOF PUBLIC ADDRESS/CLASS PASSING SPEAKER, HOUSING & GRILLE, FLUSH WALL MOUNTED, +90". |
| —— D1 —— | COMPUTER/DATA PROCESSING SYSTEM - 3/4"C., WITH ONE(1) CAT6 CABLE AS SPECIFIED.<br>D2 - 1"C., WITH TWO(2) CAT6E CABLES AS SPECIFIED.<br>D3 - 1 1/4"C., WITH THREE(3) CAT6E CABLES AS SPECIFIED.<br>D4 - 1 1/4"C., WITH FOUR(4) CAT6E CABLES AS SPECIFIED. |
| C/S | COMBINATION SINGLE WIRE CLOCK/SPEAKER SURFACE MOUNTED WITH DATA JACK AND CAT 6 CABLE BACK TO IDP. |
| ▷• | TELECOMMUNICATIONS OUTLET ON FLUSH WALL MOUNTED OUTLET BOX +18" WITH WALL MOUNTED DEVICE. PROVIDE 1"C. WITH CONDUCTORS AS SPECIFIED STUB INTO ACCESSIBLE CEILING SPACE. |
| ⊝ | INTRUSION DETECTION MOTION SENSOR ON FLUSH CEILING MOUNTED OUTLET BOX. |
| 1D ◇• | COMPUTER/DATA OUTLET WITH SINGLE DATA OUTLET CONNECTOR, ON FLUSH IN WALL OUTLET BOX, +18". PROVIDE OUTLET BOX, DATA JACKS, FACE PLATE, ETC. AND 1" CONDUIT TO THE ACCESSIBLE CEILING SPACE UNLESS NOTED OTHERWISE. PROVIDE CAT 6 DATA NETWORK CABLE AS SPECIFIED FROM THE OUTLET TO THE RESPECTIVE MDF/IDF. |
| 2D ◇• | COMPUTER/DATA OUTLET WITH TWO (2) DATA OUTLET CONNECTORS, ON FLUSH IN WALL OUTLET BOX, +18". PROVIDE OUTLET BOX, DATA JACKS, FACE PLATE, ETC. AND 1" CONDUIT TO THE ACCESSIBLE CEILING SPACE UNLESS NOTED OTHERWISE. PROVIDE TWO (2) CAT 6 DATA NETWORK CABLES AS SPECIFIED FROM THE OUTLET TO THE RESPECTIVE MDF/IDF. |
| •TV | TELEVISION OUTLET ON FLUSH WALL MOUNTED OUTLET BOX, +18" WITH A DUPLEX UNIVERSAL OUTLET CONNECTOR AND A RG-6 COAXIAL CABLE HOMERUN TO NEAREST MASTER TV SIGNAL CONTROL PANEL OR TERMINAL CABINET WITH 3/4"C. STUB IN CEILING SPACE. |
| ⊖• | DUPLEX CONVENIENCE RECEPTACLE VERTICAL ON FLUSH WALL MOUNTED OUTLET BOX, +18". INDICATES WALL MOUNTED OUTLET BOX, TYPICAL. |
| ⊖⊖• | DOUBLE DUPLEX (FOUR-PLEX) CONVENIENCE RECEPTACLE ON ONE FLUSH WALL MOUNTED OUTLET BOX |
| ⌒ | CIRCUIT BREAKER STATIONARY (NON-DRAWOUT) SECONDARY VOLTAGE. |
| ○ | DENOTES CONDUIT(S) RISING UP. |
| \|\|—• | MODULAR BUILDING GROUND ROD. SEE DETAIL A/E0-2. |

## EQUIPMENT ANCHORAGE NOTES

**MEP COMPONENT ANCHORAGE NOTE**

ALL MECHANICAL, PLUMBING, AND ELECTRICAL COMPONENTS SHALL BE ANCHORED AND INSTALLED PER THE DETAILS ON THE DSA-APPROVED CONSTRUCTION DOCUMENTS. THE FOLLOWING COMPONENTS SHALL BE ANCHORED OR BRACED TO MEET THE FORCE AND DISPLACEMENT REQUIREMENTS PRESCRIBED IN THE 2022 CBC SECTIONS 1617A.1.18 THROUGH 1617A.1.26 AND ASCE 7-16 CHAPTER 13, 26 AND 30.

1. ALL PERMANENT EQUIPMENT AND COMPONENTS.
2. TEMPORARY, MOVABLE OR MOBILE EQUIPMENT THAT IS PERMANENTLY ATTACHED (E.G. HARD WIRED) TO THE BUILDING UTILITY SERVICES SUCH AS ELECTRICITY, GAS OR WATER. "PERMANENTLY ATTACHED" SHALL INCLUDE ALL ELECTRICAL CONNECTIONS EXCEPT PLUGS FOR 110/220 VOLT RECEPTACLES HAVING A FLEXIBLE CABLE.
3. TEMPORARY, MOVABLE OR MOBILE EQUIPMENT WHICH IS HEAVIER THAN 400 POUNDS OR HAS A CENTER OF MASS LOCATED 4 FEET OR MORE ABOVE THE ADJACENT FLOOR OR ROOF LEVEL THAT DIRECTLY SUPPORT THE COMPONENT ARE REQUIRED TO BE RESTRAINED IN A MANNER APPROVED BY DSA.

THE FOLLOWING MECHANICAL AND ELECTRICAL COMPONENTS SHALL BE POSITIVELY ATTACHED TO THE STRUCTURE BUT NEED NOT DEMONSTRATE DESIGN COMPLIANCE WITH REFERENCES NOTED ABOVE. THESE COMPONENTS SHALL HAVE FLEXIBLE CONNECTIONS PROVIDED BETWEEN THE COMPONENT AND ASSOCIATED DUCTWORK, PIPING, AND CONDUIT. FLEXIBLE CONNECTIONS MUST ALLOW MOVEMENT IN BOTH TRANSVERSE AND LONGITUDINAL DIRECTIONS:

A. COMPONENTS WEIGHING LESS THAN 400 POUNDS AND HAVE A CENTER OF MASS LOCATED 4 FEET OR LESS ABOVE THE ADJACENT FLOOR OR ROOF LEVEL THAT DIRECTLY SUPPORT THE COMPONENT.
B. COMPONENTS WEIGHING LESS THAN 20 POUNDS, OR IN THE CASE OF DISTRIBUTED SYSTEMS, LESS THAN 5 POUNDS PER FOOT, WHICH ARE SUSPENDED FROM A ROOF OR FLOOR OR HUNG FROM A WALL.

THE ANCHORAGE OF ALL MECHANICAL, ELECTRICAL AND PLUMBING COMPONENTS SHALL BE SUBJECT TO THE APPROVAL OF THE DESIGN PROFESSIONAL IN GENERAL RESPONSIBLE CHARGE OR STRUCTURAL ENGINEER DELEGATED RESPONSIBILITY AND ACCEPTANCE BY DSA. THE PROJECT INSPECTOR WILL VERIFY THAT ALL COMPONENTS AND EQUIPMENT HAVE BEEN ANCHORED IN ACCORDANCE WITH ABOVE REQUIREMENTS.

**PIPING, DUCTWORK, AND ELECTRICAL DISTRIBUTION SYSTEM BRACING NOTE**

PIPING, DUCTWORK, AND ELECTRICAL DISTRIBUTION SYSTEMS SHALL BE BRACED TO COMPLY WITH THE FORCES AND DISPLACEMENTS PRESCRIBED IN ASCE 7-16 SECTION 13.3 AS DEFINED IN ASCE 7-16 SECTIONS 13.6.5, 13.6.6, 13.6.7, 13.6.8; AND 2022 CBC, SECTIONS 1617A.1.24, 1617A.1.25 AND 1617A.1.26.

THE METHOD OF SHOWING BRACING AND ATTACHMENTS TO THE STRUCTURE FOR THE IDENTIFIED DISTRIBUTION SYSTEM ARE AS NOTED BELOW. WHEN BRACING AND ATTACHMENTS ARE BASED ON A PREAPPROVAL INSTALLATION GUIDE (E.G., HCAi OPM FOR 2013 OR LATER), COPIES OF THE BRACING SYSTEM INSTALLATION GUIDE OR MANUAL SHALL BE AVAILABLE ON THE JOBSITE PRIOR TO THE START OF AND DURING THE HANGING AND BRACING OF THE DISTRIBUTION SYSTEMS. THE STRUCTURAL ENGINEER OF RECORD SHALL VERIFY THE ADEQUACY OF THE STRUCTUR TO SUPPORT THE HANGER AND BRACE LOADS.

MECHANICAL PIPING (MP), MECHANICAL DUCTS (MD), PLUMBING PIPING (PP), ELECTRICAL DISTRIBUTION SYSTEMS (E):

MP ☐ MD ☐ PP ☐ E ☒ OPTION 1: DETAILED ON THE APPROVED DRAWINGS WITH PROJECT SPECIFIC NOTES AND DETAILS.

MP ☐ MD ☐ PP ☐ E ☐ OPTION 2: SHALL COMPLY WITH HCAi PREAPPROVAL (OPM#) #____________.

## ABBREVIATIONS

| | |
|---|---|
| A.F.F. | ABOVE FINISH FLOOR |
| A.F.G. | ABOVE FINISH GRADE |
| AWG | AMERICAN WIRE GAUGE |
| AMP, A | AMPERE |
| AF/AT | AMP FRAME, AMP TRIP |
| AS/AF | AMP SWITCH, AMP FUSE |
| AV | AUDIO VISUAL |
| CIRC., CKT. | CIRCUIT |
| CB | CIRCUIT BREAKER |
| C | CONDUIT |
| C.O. | CONDUIT ONLY |
| CONN | CONNECTED |
| DIA | DIAMETER |
| EMCS | ENERGY MANAGEMENT CONTROL SYSTEM |
| EMT | ELECTRICAL METALLIC TUBING |
| EWC | ELECTRIC WATER COOLER |
| E-O-L | END-OF-LINE CIRCUIT TERMINATOR |
| EF | EXHAUST FAN |
| ER | EXISTING EQUIPMENT TO BE REMOVED |
| E | EXISTING EQUIPMENT |
| FT. OR ' | FEET |
| FA | FIRE ALARM |
| FLA | FULL LOAD AMPS |
| GFI | GROUND FAULT INTERRUPTER |
| GRD | GROUND |
| HVAC | HEATING, VENTILATING AND AIR CONDITIONING |
| H.,W.,D.,L. | HEIGHT, WIDTH, DEPTH, LENGTH |
| HP | HORSEPOWER |
| IDF | INTERMEDIATE DISTRIBUTION FRAME |
| IN. OR " | INCHES |
| IG | ISOLATED GROUND |
| J-BOX | JUNCTION BOX |
| KVA | KILOVOLT AMPERES |
| KW | KILOWATT |
| LCL | LONG CONTINUOUS LOAD |
| L.O. | LUGS ONLY |
| LTG, LTS | LIGHTING |
| MCB | MAIN CIRCUIT BREAKER |
| MDF | MAIN DISTRIBUTION FRAME |
| MH | METAL HALIDE |
| MCC | MOTOR CONTROL CENTER |
| MCM | THOUSAND CIRCULAR MILS |
| MCP | MOTOR CIRCUIT PROTECTOR |
| MLO | MAIN LUGS ONLY |
| MTD | MOUNTED |
| NEC | NATIONAL ELECTRICAL CODE |
| NC | NORMALLY CLOSED |
| NO | NORMALLY OPENED |
| NIC | NOT IN CONTRACT |
| NO. OR # | NUMBER |
| PRIMARY | OVER 600 VOLTS |
| PH. OR | PHASE |
| PROVIDE | FURNISH, INSTALL AND CONNECT |
| PA | PUBLIC ADDRESS |
| REC, RECEPT | RECEPTACLE |
| REF | REFRIGERATOR |
| RGS | RIGID GALVANIZED STEEL |
| RL | RELOCATED EXISTING EQUIPMENT |
| SECONDARY | 600 VOLTS AND LESS |
| O | INDICATES DEVICE ON SURFACE WALL MOUNTED OUTLET BOX. |
| TV | TELEVISION |
| TYP | TYPICAL |
| U.N.O. | UNLESS NOTED OTHERWISE |
| V | VOLTS |
| VA | VOLT AMPERES |
| WP | WEATHERPROOF |
| W | WIRE |
| DFCI | DISTRICT FURNISHED CONTRACTOR INSTALLED |
| DFDI | DISTRICT FURNISHED DISTRICT INSTALLED |
| BLDG. | BUILDING |
| IWB | INTERACTIVE WHITE BOARD |
| AVC | AUDIO/VIDEO CABINET |
| 1P | SINGLE POLE |
| 2P | DOUBLE POLE |
| 3P | TRIPLE POLE |

## SHEET INDEX


| | |
|---|---|
| E0-1 | SYMBOL LIST, NOTES AND DETAILS |
| E0-2 | SINGLE LINE DIAGRAM AND DETAILS |
| E0-3 | ELECTRICAL DETAILS |
| E1-0 | OVERALL SITE ELECTRICAL PLAN |
| E1-1 | ENLARGED SITE POWER PLAN |
| E1-2 | ENLARGED SITE TELECOM PLAN |
| E2-0 | FIRE ALARM SYSTEM INFORMATION |
| E2-1 | OVERALL SITE FIRE ALARM PLAN |
| E2-2 | ENLARGED FIRE ALARM PLAN |


## DSA INSPECTOR NOTES

THE DSA INSPECTOR SHALL VERIFY SOURCE OF POWER AND GROUNDING.


A# 03 - 124890
DIVISION OF THE STATE ARCHITECT
355 S. GRAND AVE, SUITE 2100
LOS ANGELES, CA 90071
ph: 213.897.3995 fx: 213.897.3159/0726
agency

tBP architecture planning interiors
tBP/Architecture
4611 Teller Avenue
Newport Beach, CA 92660
ph: 949.673.0300
architect

FBA Engineering
Consulting Electrical Engineers
150 Paularino Avenue Suite A120
Costa Mesa, CA 92626
949.852.9995 • 949.852.1657 (fax)
fbaengr.com
FBA Job Number: 212.328

REGISTERED PROFESSIONAL ENGINEER STEPHEN R. ZAJICEK No. E 10372 Exp. 09-30-26 ELECTRICAL STATE OF CALIFORNIA
2/25/2025
consultant


ARCADIA HIGH SCHOOL
LOCKER ROOM INTERIM HOUSING

ARCADIA UNIFIED SCHOOL DISTRICT
180 CAMPUS DRIVE
ARCADIA, CALIFORNIA 91006
owner

tBP project number : 21196.00
file name:
drawn by: checked by:
date: 11/18/2024
Rev: date: description:


THIS DRAWING AND THE DESIGNS, DEPICTIONS, IDEAS AND OTHER INFORMATION CONTAINED HEREIN CONSTITUTE UNPUBLISHED WORK OF tBP/ARCHITECTURE AND SHALL REMAIN THE PROPERTY OF tBP/ARCHITECTURE IN PERPETUITY. NO PART THEREOF SHALL BE REPRODUCED, DISCLOSED, DISTRIBUTED, SOLD, PUBLISHED OR OTHERWISE USED IN ANY WAY WITHOUT THE ADVANCED EXPRESS WRITTEN CONSENT OF tBP/ARCHITECTURE.


drawing title:
SYMBOL LIST, GENERAL NOTES AND DETAILS

drawing no.:
E0-1

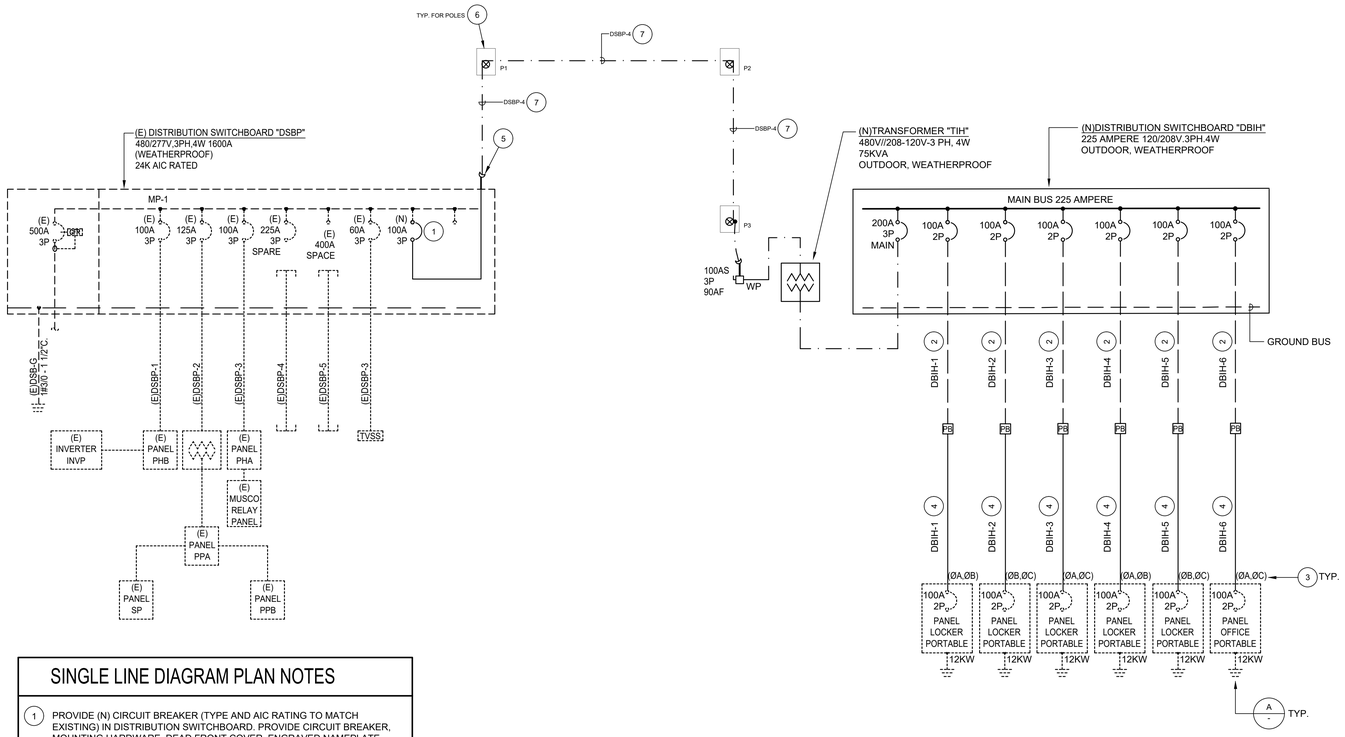


## SINGLE LINE DIAGRAM PLAN NOTES

1. PROVIDE (N) CIRCUIT BREAKER (TYPE AND AIC RATING TO MATCH EXISTING) IN DISTRIBUTION SWITCHBOARD. PROVIDE CIRCUIT BREAKER, MOUNTING HARDWARE, DEAD FRONT COVER, ENGRAVED NAMEPLATE, ETC. FOR A COMPLETE INSTALLATION.
2. PROVIDE 3#1 & 1#8 GRD. - 1 1/2"C. UNDERGROUND CONDUIT FROM DISTRIBUTION SWITCHBOARD TO PULL BOX MOUNTED ON FIRST BUILDING.
3. CONNECT TO PHASE BUSSING AS INDICATED SO LOADS ARE BALANCED ACROSS ALL THREE PHASES.
4. PROVIDE 3#1 & 1#8 GRD. - 1 1/2"C. SURFACE MOUNT CONDUIT ON BUILDING .
5. PROVIDE 3" WEATHERPROOF WEATHERHEAD. SEE DETAIL F ON SHEET E0-3 FOR ADDITIONAL INFORMATION.
6. TEMPORARY POWER POLE. INSTALL PER DETAILS ON SHEET E0-3.
7. PROVIDE OVERHEAD TRIPLEX ALUMINUM CABLE WITH INSULATION AND NEURAL MESSENGER CABLE, 3#2/0 PHASE CONDUCTORS AND 1#2/0 NEUTRAL CONDUCTOR. GENERAL CABLE TROPHON OR APPROVED EQUAL.

SINGLE LINE DIAGRAM GENERAL NOTE:

ALL DASHED LINE WORK (- - - - - -) INDICATES EXISTING ELECTRICAL EQUIPMENT, FEEDERS, DEVICES, ETC. TO REMAIN. ALL SOLID LINE WORK (——) INDICATES ELECTRICAL EQUIPMENT, FEEDERS, DEVICES, ETC. TO BE PROVIDE IN THIS SCOPE OF WORK.

DETAIL NOTES:

1. IN THE PRECAST CONCRETE PULL BOXES FURNISH AND INSTALL CABLE RACKS ON WALLS INDICATED. EACH RACK SHALL BE EQUIPPED WITH THREE PORCELAIN CABLE HOLDERS ON A. VERTICAL STEEL MOUNTING BAR. BOLT HOLES SHALL BE PRE-CAST PULL BOXES JENSEN PRECAST OR EQUAL WITH STAINLESS STEEL FLAT HEAD SCREWS AND SELF CLEANING HOLES. LOOP ALL CABLES AROUND THE LONGEST LENGTH IN THE PULL BOX.
2. PROVIDE NON SLIP COATING ON COVER.
3. ALL METAL PARTS SHALL BE HOT-DIPPED GALVANIZED AFTER FABRICATION.
4. "BROOKS" YARD BOX OR EQUAL WITH 9 1/2" X 16" I.D. CONCRETE BOX (NO 3 BODY) WITH 3-TL CAST IRON COVER. UTILITY NAME (ELECTRICAL, SIGNAL, FIRE ALARM, ETC.) EMBOSSED 1/16"ABOVE SURFACE, 1" HIGH UPPERCASE.

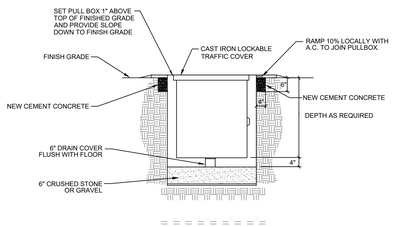


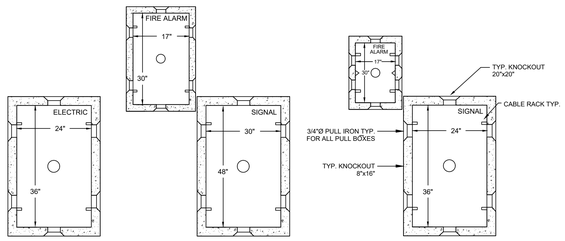


PULLBOX GROUP TYPE "A" PULLBOX GROUP TYPE "B" TYPICAL LAYOUT

## PRECAST CONCRETE PULLBOX DETAIL

SCALE: NTS | B

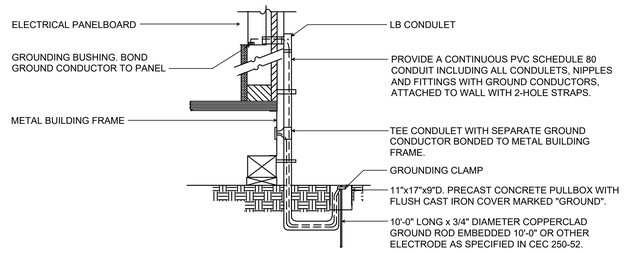


NOTES:

1. SIZE OF CONDUCTORS SHALL COMPLY WITH CEC. TABLE 250-66.
2. BOND SEPARATE CONDUCTORS FROM GROUND ROD TO ELECTRICAL PANEL, AND TO METAL BUILDING FRAME (CEC. 250-104). PROVIDE BONDING CONDUCTOR BETWEEN THE BUILDING FRAME AND THE STEEL RAMPS. IN ADDITION TO THE DETAIL SHOWN ABOVE, BOND THE ELECTRICAL CONDUCTOR GROUND TO METAL WATER PIPE EMBEDDED AT LEAST 10 FEET INTO THE SOIL IF AVAILABLE (CEC. 250-90 THROUGH 250-106).
3. ALL MODULES OF METAL FRAME BUILDINGS AND RAMPS SHALL BE ELECTRICALLY BONDED TOGETHER (BOLTING ONLY IS NOT ACCEPTABLE BONDING).
4. CHECK RESISTANCE TO GROUND. IF RESISTANCE EXCEEDS 25 OHMS, INSTALL ADDITIONAL GROUND RODS WITH CONDUCTORS AS SHOWN, SEPARATED AT LEAST 6'-0" UNTIL RESISTANCE IS REDUCED TO 25 OHMS OR LESS. (CEC. 250-56).
5. SEE SPECIFICATIONS FOR TESTING OF GROUNDING REQUIRED.
6. STEEL RAMPS AND OTHER METAL COMPONENTS ATTACHED TO PORTABLE BUILDING(S) SHALL BE BONDED TO THE BUILDING FRAME.
7. ALL ELECTRICAL WORK TO MEET THE REQUIREMENTS OF THE STATE ELECTRICAL CODES. PART 3 OF TITLE 24, CAC, WHICH REQUIRES PROPER GROUNDING OF ALL ELECTRICAL CIRCUITS, EQUIPMENT, ETC. FOR PUBLIC SCHOOL BUILDING(S),REGARDLESS OF THE TYPE OF CONSTRUCTION.
8. METAL MODULAR BUILDINGS. WHEN METAL BUILDINGS ARE MADE OF COMPONENTS, EACH BUILDING COMPONENT,INCLUDING STEEL RAMPS, MUST BE ELECTRICALLY BONDED TOGETHER IN A MANNER ACCEPTABLE TO OSA/SSS. PAINT ON THE SURFACE WILL INHIBIT PASSAGE OF ELECTRICAL CURRENT; THEREFORE, BOLTED CONNECTIONS OF COMPONENT PARTS ARE NOT AN ACCEPTABLE ELECTRICAL BOND.
9. METAL MODULAR BUILDINGS. IN METAL FRAME MODULAR BUILDINGS, THE ELECTRICAL SYSTEM MUST BE GROUNDED AS REQUIRED IN TITLE 24, CAC.
10. GROUNDING. THE ELECTRICAL CIRCUITS ARE USUALLY PROPERLY GROUNDED, HOWEVER, IT IS ALSO NECESSARY TO INDEPENDENTLY GROUND THE STEEL FRAMES. THIS IS PARTICULARLY IMPORTANT WHEN THE BUILDING IS SUPPORTED ON A FOUNDATION MADE OF WOOD.

ALL BUILDING COMPONENTS MUST BE ELECTRICALLY BONDED TOGETHER AND MUST BE INDEPENDENTLY GROUNDED. ALL GROUNDING SYSTEMS ARE TO BE TESTED WITH A MEGGER UNIT OR IN AN OTHERWISE ACCEPTABLE MANNER. REFER TO SECTIONS 250-90 THROUGH 250-106. CALIFORNIA ELECTRICAL CODE, FOR SPECIFIC GROUNDING REQUIREMENTS. TESTING SHALL BE WITNESSED BY PROJECT INSPECTOR. SUBMIT A COPY OF THE REPORT TO THE ARCHITECT.

## MODULAR BUILDING GROUND DETAIL

SCALE: NTS | A


A# 03 - 124890
DIVISION OF THE STATE ARCHITECT
355 S. GRAND AVE, SUITE 2100
LOS ANGELES, CA 90071
ph: 213.897.3995 fx: 213.897.3159/0726
agency

tBP
architecture
planning
interiors

tBP/Architecture
4611 Teller Avenue
Newport Beach, CA 92660
ph: 949.673.0300
architect

FBA Engineering
Consulting Electrical Engineers
150 Paularino Avenue Suite A120
Costa Mesa, CA 92626
949.852.9995 ♥ 949.852.1657 (fax)
fbaengr.com
FBA Job Number: 212.328


REGISTERED PROFESSIONAL ENGINEER STEPHEN R. ZACTICK No. E 10372 Exp. 09-30-25 ELECTRICAL STATE OF CALIFORNIA
2/25/2025
consultant

# ARCADIA HIGH SCHOOL LOCKER ROOM INTERIM HOUSING

ARCADIA UNIFIED SCHOOL DISTRICT
180 CAMPUS DRIVE
ARCADIA, CALIFORNIA 91006

owner

tBP project number : 21196.00
file name:
drawn by: checked by:
date: 11/18/2024

| Rev: | date: | description: |
|---|---|---|


THIS DRAWING AND THE DESIGNS, DEPICTIONS, IDEAS AND OTHER INFORMATION CONTAINED HEREIN CONSTITUTE UNPUBLISHED WORK OF tBP/ARCHITECTURE AND SHALL REMAIN THE PROPERTY OF tBP/ARCHITECTURE IN PERPETUITY. NO PART THEREOF SHALL BE REPRODUCED, DISCLOSED, DISTRIBUTED, SOLD, PUBLISHED OR OTHERWISE USED IN ANY WAY WITHOUT THE ADVANCED EXPRESS WRITTEN CONSENT OF tBP/ARCHITECTURE.


drawing title:
SINGLE LINE DIAGRAM AND DETAILS

drawing no.:
E0-2


FBA Engineering / Plot Date: 2/25/2025 4:12 PM / Plotted by: Don Fleischman / Drawing Location: I:\212\328\E0-2 Single Line Diagram.dwg

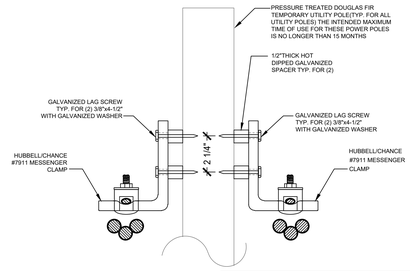


POWER POLES LESS THAN 35 FEET ABOVE GRADE ARE NOT CONSIDERED TO BE PART OF THE SCHOOL BUILDING BUT MAY BE INCLUDED IN THE PLANS AND SPECIFICATIONS, PER CALIFORNIA ADMINISTRATION CODE CAC 4-314 DEFINITIONS: SCHOOL BUILDINGS (PAGE 35); THEREFORE POWER POLES AND FOOTINGS LESS THAN 35 FEET ARE NOT PART OF DSA REVIEW. TYPICAL FOR DETAILS E, F, G, H, I, J, AND K.

## TYP POWER CABLES ATTACHMENT — SCALE: NTS — H

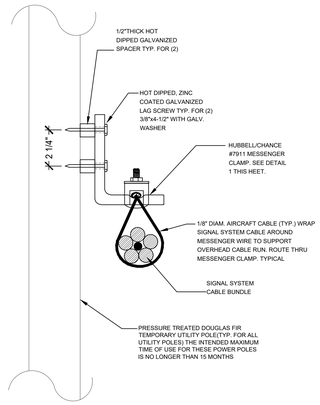


POWER POLES LESS THAN 35 FEET ABOVE GRADE ARE NOT CONSIDERED TO BE PART OF THE SCHOOL BUILDING BUT MAY BE INCLUDED IN THE PLANS AND SPECIFICATIONS, PER CALIFORNIA ADMINISTRATION CODE CAC 4-314 DEFINITIONS: SCHOOL BUILDINGS (PAGE 35); THEREFORE POWER POLES AND FOOTINGS LESS THAN 35 FEET ARE NOT PART OF DSA REVIEW. TYPICAL FOR DETAILS E, F, G, H, I, J, AND K.

## TYPICAL SIGNAL SYSTEM CABLE ATTACHMENT — SCALE: NTS — K

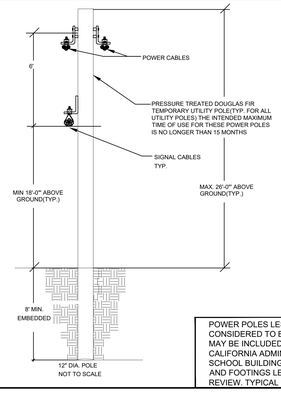


POWER POLES LESS THAN 35 FEET ABOVE GRADE ARE NOT CONSIDERED TO BE PART OF THE SCHOOL BUILDING BUT MAY BE INCLUDED IN THE PLANS AND SPECIFICATIONS, PER CALIFORNIA ADMINISTRATION CODE CAC 4-314 DEFINITIONS: SCHOOL BUILDINGS (PAGE 35); THEREFORE POWER POLES AND FOOTINGS LESS THAN 35 FEET ARE NOT PART OF DSA REVIEW. TYPICAL FOR DETAILS E, F, G, H, I, J, AND K.

## TYPICAL CABLE INSTALLATION — SCALE: NTS — G

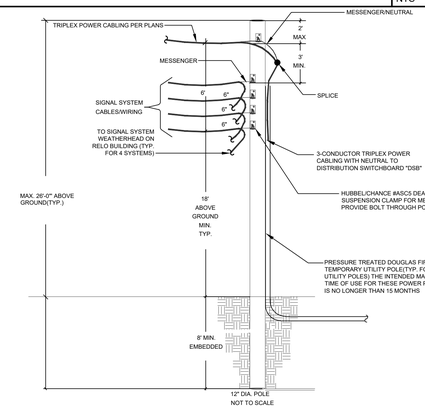


POWER POLES LESS THAN 35 FEET ABOVE GRADE ARE NOT CONSIDERED TO BE PART OF THE SCHOOL BUILDING BUT MAY BE INCLUDED IN THE PLANS AND SPECIFICATIONS, PER CALIFORNIA ADMINISTRATION CODE CAC 4-314 DEFINITIONS: SCHOOL BUILDINGS (PAGE 35); THEREFORE POWER POLES AND FOOTINGS LESS THAN 35 FEET ARE NOT PART OF DSA REVIEW. TYPICAL FOR DETAILS E, F, G, H, I, J, AND K.

## POWER AND SIGNAL CONNECTION — SCALE: NTS — F

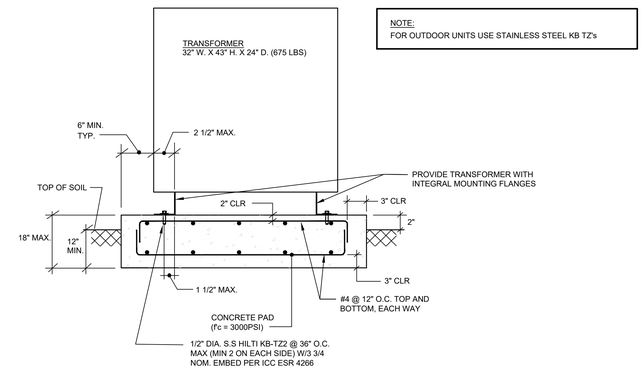


NOTE:
FOR OUTDOOR UNITS USE STAINLESS STEEL KB TZ's

## TRANSFORMER MOUNTING DETAIL — SCALE: N.T.S — D

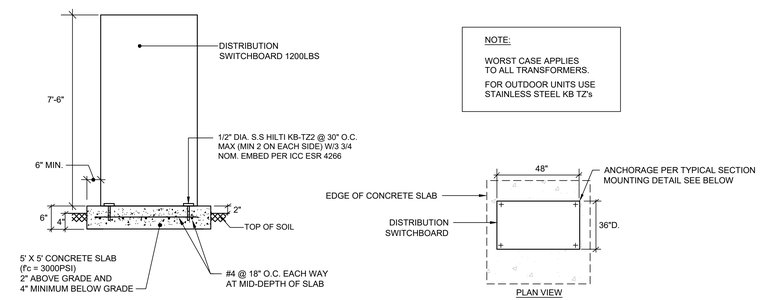


NOTE:
WORST CASE APPLIES TO ALL TRANSFORMERS.
FOR OUTDOOR UNITS USE STAINLESS STEEL KB TZ's

## DISTRIBUTION BOARD ANCHORAGE DETAIL — SCALE: NTS — C

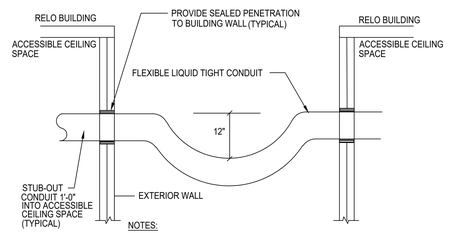


NOTES:
TO BE USED WHEN CONNECTING TWO BUILDINGS FOR NO MORE THAN 6' SEPARATION.
SIZE OF CONDUIT AS REQUIRED.
FOR DISTANCES IN EXCESS OF 6' PROVIDE UNDERGROUND INSTALLATION.

## CONDUIT SLEEVE SEISMIC DETAIL — SCALE: NTS — B

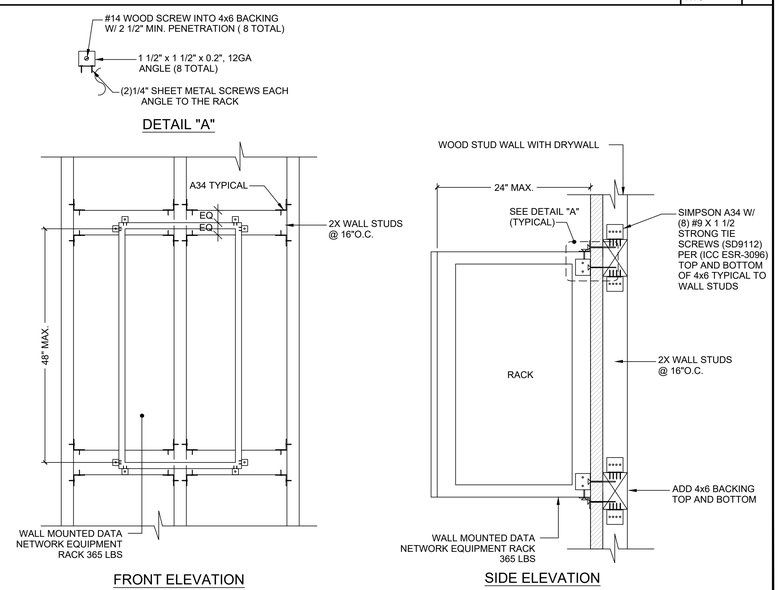


## TYPICAL WALL MOUNTED DATA EQUIPMENT RACK — SCALE: NTS — A

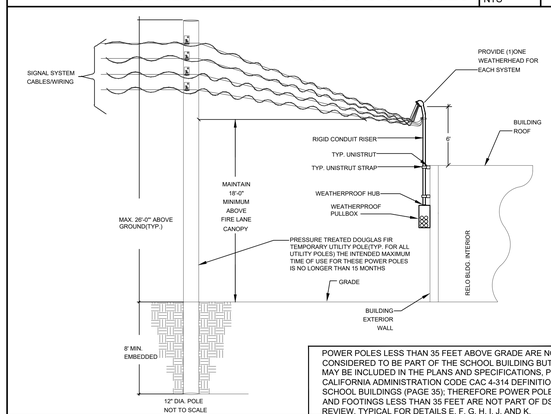


POWER POLES LESS THAN 35 FEET ABOVE GRADE ARE NOT CONSIDERED TO BE PART OF THE SCHOOL BUILDING BUT MAY BE INCLUDED IN THE PLANS AND SPECIFICATIONS, PER CALIFORNIA ADMINISTRATION CODE CAC 4-314 DEFINITIONS: SCHOOL BUILDINGS (PAGE 35); THEREFORE POWER POLES AND FOOTINGS LESS THAN 35 FEET ARE NOT PART OF DSA REVIEW. TYPICAL FOR DETAILS E, F, G, H, I, J, AND K.

## SIGNAL EXTENSION FROM POLE TO RELO. BLDG. — SCALE: NTS — I

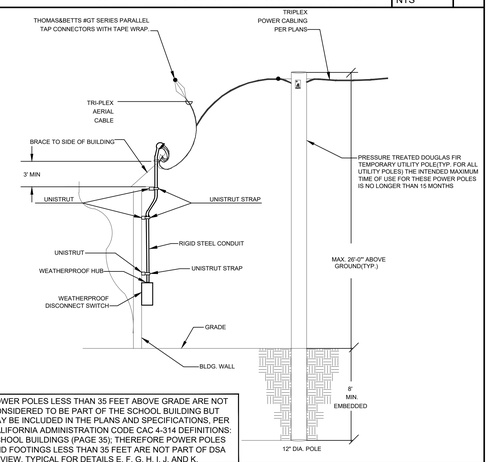


POWER POLES LESS THAN 35 FEET ABOVE GRADE ARE NOT CONSIDERED TO BE PART OF THE SCHOOL BUILDING BUT MAY BE INCLUDED IN THE PLANS AND SPECIFICATIONS, PER CALIFORNIA ADMINISTRATION CODE CAC 4-314 DEFINITIONS: SCHOOL BUILDINGS (PAGE 35); THEREFORE POWER POLES AND FOOTINGS LESS THAN 35 FEET ARE NOT PART OF DSA REVIEW. TYPICAL FOR DETAILS E, F, G, H, I, J, AND K.

## POWER EXTENSION FROM BUILDING TO POLE — SCALE: NTS — E


A# 03 - 124890
DIVISION OF THE STATE ARCHITECT
355 S. GRAND AVE, SUITE 2100
LOS ANGELES, CA 90071
ph: 213.897.3995 fx: 213.897.3159/0726
agency

tBP
architecture planning interiors
tBP/Architecture
4611 Teller Avenue
Newport Beach, CA 92660
ph: 949.673.0300
architect

FBA Engineering
Consulting Electrical Engineers
150 Paularino Avenue Suite A120
Costa Mesa, CA 92626
949.852.9995 ♦ 949.852.1657 (fax)
fbaengr.com
FBA Job Number: 212.328
REGISTERED PROFESSIONAL ENGINEER STEPHEN R. ZAUTCK No. E 10372 Exp. 09-30-25 ELECTRICAL STATE OF CALIFORNIA
2/25/2025
consultant


# ARCADIA HIGH SCHOOL LOCKER ROOM INTERIM HOUSING

ARCADIA UNIFIED SCHOOL DISTRICT
180 CAMPUS DRIVE
ARCADIA, CALIFORNIA 91006

owner

tBP project number : 21196.00
file name:
drawn by: checked by:
date: 11/18/2024

| Rev: | date: | description: |
|---|---|---|


THIS DRAWING AND THE DESIGNS, DEPICTIONS, IDEAS AND OTHER INFORMATION CONTAINED HEREIN CONSTITUTE UNPUBLISHED WORK OF tBPARCHITECTURE AND SHALL REMAIN THE PROPERTY OF tBPARCHITECTURE IN PERPETUITY. NO PART THEREOF SHALL BE REPRODUCED, DISCLOSED, DISTRIBUTED, SOLD, PUBLISHED OR OTHERWISE USED IN ANY WAY WITHOUT THE ADVANCED EXPRESS WRITTEN CONSENT OF tBPARCHITECTURE.


drawing title:
ELECTRICAL DETAILS

drawing no.:
E0-3


FBA Engineering / Plot Date: 2/25/2025 4:12 PM / Plotted by: Don Fleischman / Drawing Location: I:\212\328\E0-3 Details.dwg

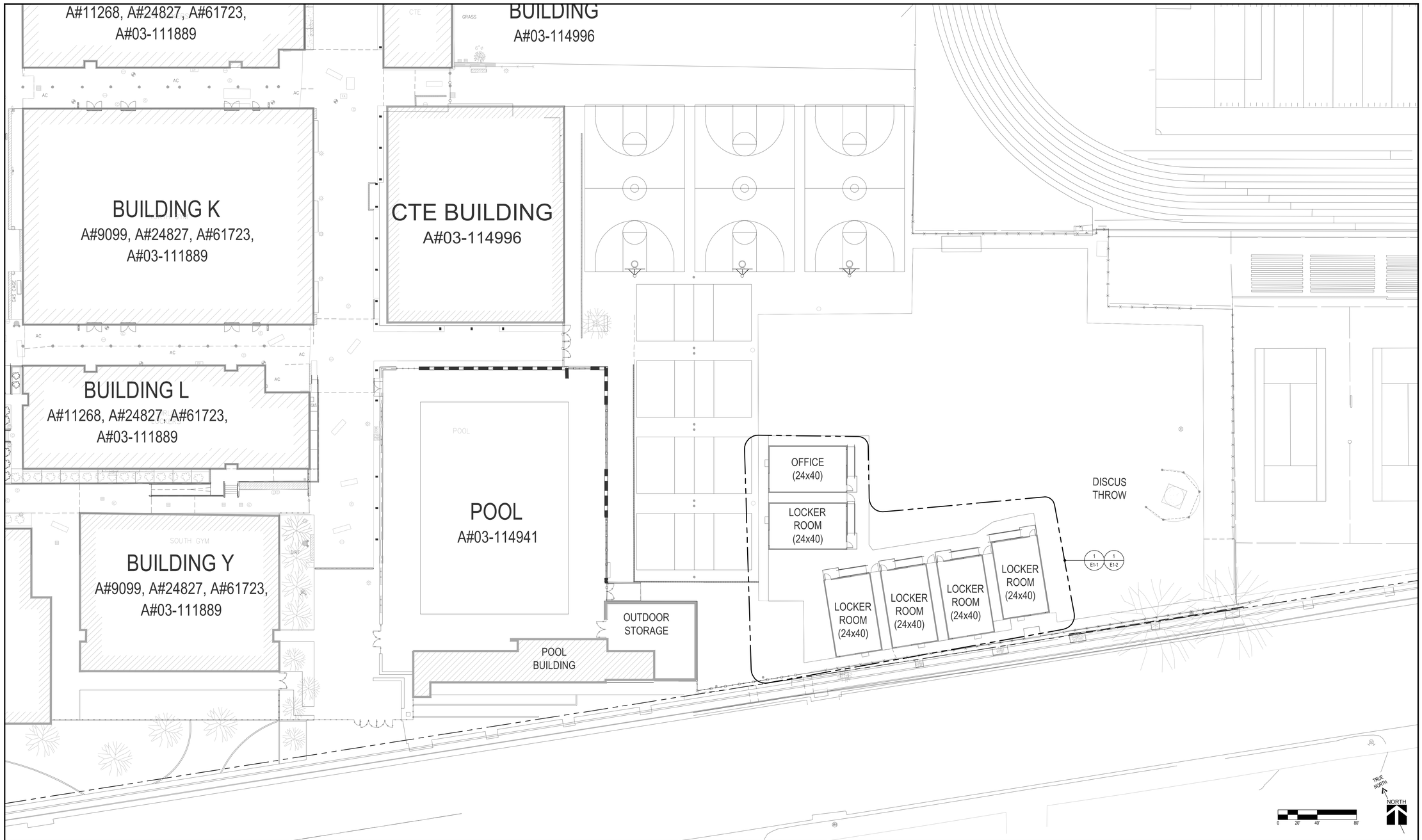


ELECTRICAL SITE PLAN 1
SCALE: 1"=20'-0"

A# 03 - 124890
DIVISION OF THE STATE ARCHITECT
355 S. GRAND AVE, SUITE 2100
LOS ANGELES, CA 90071
ph: 213.897.3995 fx: 213.897.3159/0726
agency

tBP
architecture
planning
interiors

tBP/Architecture
4611 Teller Avenue
Newport Beach, CA 92660
ph: 949.673.0300
architect

**FBA** Engineering
Consulting Electrical Engineers
150 Paularino Avenue Suite A120
Costa Mesa, CA 92626
949.852.9995 ♥ 949.852.1657 (fax)
fbaengr.com
FBA Job Number: 212.328

REGISTERED PROFESSIONAL ENGINEER
STEPHEN R. ZAJTCHUK
No. E 10372
Exp. 09-30-25
ELECTRICAL
STATE OF CALIFORNIA
2/25/2025
consultant

# ARCADIA HIGH SCHOOL LOCKER ROOM INTERIM HOUSING

ARCADIA UNIFIED SCHOOL DISTRICT
180 CAMPUS DRIVE
ARCADIA, CALIFORNIA 91006

owner

tBP project number : 21196.00
file name:
drawn by: checked by:
date: 11/18/2024

| Rev: | date: | description: |
|---|---|---|
| | | |
| | | |
| | | |
| | | |
| | | |
| | | |

THIS DRAWING AND THE DESIGNS, DEPICTIONS, IDEAS AND OTHER INFORMATION CONTAINED HEREIN CONSTITUTE UNPUBLISHED WORK OF tBP/ARCHITECTURE AND SHALL REMAIN THE PROPERTY OF tBP/ARCHITECTURE IN PERPETUITY. NO PART THEREOF SHALL BE REPRODUCED, DISCLOSED, DISTRIBUTED, SOLD, PUBLISHED OR OTHERWISE USED IN ANY WAY WITHOUT THE ADVANCED EXPRESS WRITTEN CONSENT OF tBP/ARCHITECTURE.

drawing title:
OVERALL SITE
ELECTRICAL PLAN

drawing no.:
E-1.0

FBA Engineering / Plot Date: 2/25/2025 4:12 PM / Plotted by: Don Fleischman / Drawing Location: I:\212\328\E1-0_Overall Site Electrical Plan.dwg

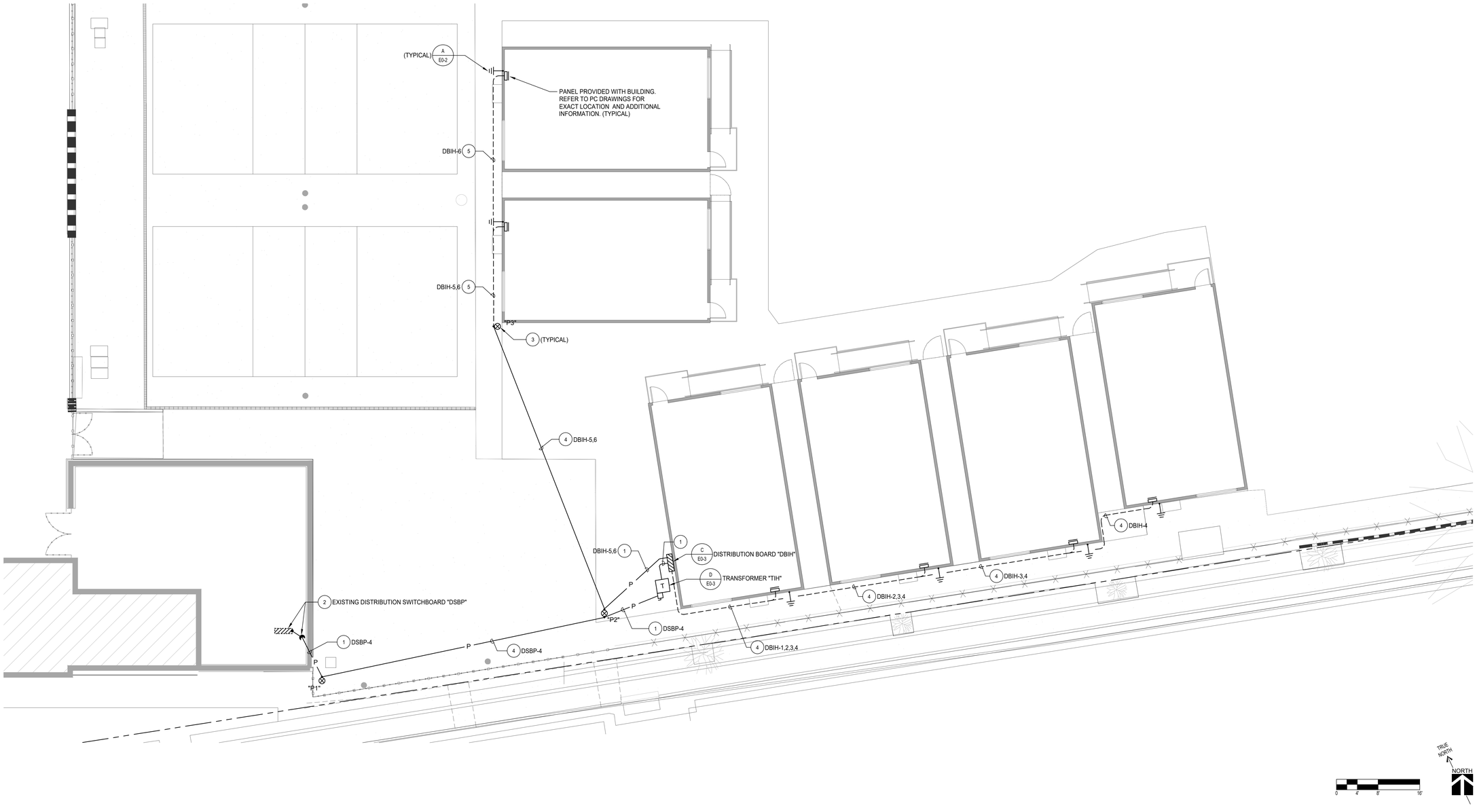


## ELECTRICAL SITE PLAN 1

SCALE: 1/8"=1'-0"

## PLAN NOTES

1. REFER TO SINGLE LINE DIAGRAM FOR FEEDER REQUIREMENTS.
2. PROVIDE 4" DIA. WEATHER HEAD FOR ROUTING POWER CONDUCTORS. SEE DETAILS ON SHEET E0-3 FOR ADDITIONAL INFORMATION.
3. TEMPORARY NEW 12" DIAMETER POWER POLE BY DOUGLAS FIR SEE SHEET E0-3 FOR ADDITIONAL INFORMATION.
4. RUN FEEDER OVERHEAD ON POLES. SEE SINGLE LINE DIAGRAM FOR POWER FEEDER INFORMATION.
5. ROUTE FEEDER(S) ON EXTERIOR OF BUILDING.

## SITE PERFORMANCE NOTES

1. ELECTRICAL CONTRACTOR SHALL EXERCISE EXTREME CAUTION IN EXCAVATING AND TRENCHING ON THIS SITE TO AVOID EXISTING DUCTS, PIPING OR CONDUITS, ETC., AND TO PREVENT HAZARD TO PERSONNEL AND/OR DAMAGE TO EXISTING UNDERGROUND UTILITIES OR STRUCTURES WHETHER OR NOT SHOWN OR DETAILED AND INSTALLED BY THIS OR ANY OTHER CONTRACTS. THE CONTRACTOR SHALL IMMEDIATELY NOTIFY THE DISTRICT SHOULD SUCH UNIDENTIFIED CONDITIONS BE DISCOVERED. THESE DRAWINGS AND SPECIFICATIONS DO NOT INCLUDE NECESSARY COMPONENTS FOR CONSTRUCTION SAFETY.
2. REFER TO CIVIL ENGINEER'S GRADING PLANS FOR NEW GRADES. AT ALL EXISTING TO REMAIN PULLBOXES/VAULTS, ADJUST HEIGHT OF PULLBOX/VAULT COVER TO BE FLUSH WITH NEW GRADE OR FINISHED SURFACE. PROVIDE ADDITIONAL NECKING TO COMPLY WITH THIS PROVISION.
3. ALL NEW AND EXISTING PULLBOX/VAULT COVERS INDICATED ON THESE PLANS, SHALL HAVE A NON-SLIP COATING, JENSEN "TRAX PLATE" OR EQUIVALENT.
4. ALL NEW ELECTRICAL/COMMUNICATIONS DUCT BANKS SHALL BE INSTALLED 24" MIN. BELOW FINISH GRADE. SEE DETAILS D & E ON E-0.2.
5. ALL NEW AND EXISTING CONDUIT CABLING AND CONDUCTOR RUNS ARE SHOWN DIAGRAMMATICALLY. CONTRACTOR SHALL FIELD VERIFY THE EXISTING CONDITIONS AND PROVIDE ALL CABLING/CONDUCTORS OF SUFFICIENT LENGTH FOR COMPLETE END TO END CONNECTIONS.


A# 03 - 124890
DIVISION OF THE STATE ARCHITECT
355 S. GRAND AVE, SUITE 2100
LOS ANGELES, CA 90071
ph: 213.897.3995 fx: 213.897.3159/0726
agency

tBP
architecture
planning
interiors

tBP/Architecture
4611 Teller Avenue
Newport Beach, CA 92660
ph: 949.673.0300
architect

FBA Engineering
Consulting Electrical Engineers
150 Paularino Avenue Suite A120
Costa Mesa, CA 92626
949.852.9995 ♥ 949.852.1657 (fax)
fbaeng/.com
FBA Job Number: 212.328
REGISTERED PROFESSIONAL ENGINEER
STEPHEN R. ZAJTCHUK
No. E 10372
Exp. 09-30-25
ELECTRICAL
STATE OF CALIFORNIA
2/25/2025
consultant


# ARCADIA HIGH SCHOOL LOCKER ROOM INTERIM HOUSING

ARCADIA UNIFIED SCHOOL DISTRICT
180 CAMPUS DRIVE
ARCADIA, CALIFORNIA 91006

owner

tBP project number : 21196.00

file name:

drawn by: checked by:

date: 11/18/2024

| Rev: | date: | description: |
|---|---|---|
| | | |


THIS DRAWING AND THE DESIGNS, DEPICTIONS, IDEAS AND OTHER INFORMATION CONTAINED HEREIN CONSTITUTE UNPUBLISHED WORK OF tBP/ARCHITECTURE AND SHALL REMAIN THE PROPERTY OF tBP/ARCHITECTURE IN PERPETUITY. NO PART THEREOF SHALL BE REPRODUCED, DISCLOSED, DISTRIBUTED, SOLD, PUBLISHED OR OTHERWISE USED IN ANY WAY WITHOUT THE ADVANCED EXPRESS WRITTEN CONSENT OF tBP/ARCHITECTURE.


drawing title:

ENLARGED SITE POWER PLAN

drawing no.:

E-1.1


FBA Engineering / Plot Date: 2/25/2025 4:13 PM / Plotted by: Don Fleischman / Drawing Location: I:\212\328\E1-1_Enlarged Site Power Plan.dwg

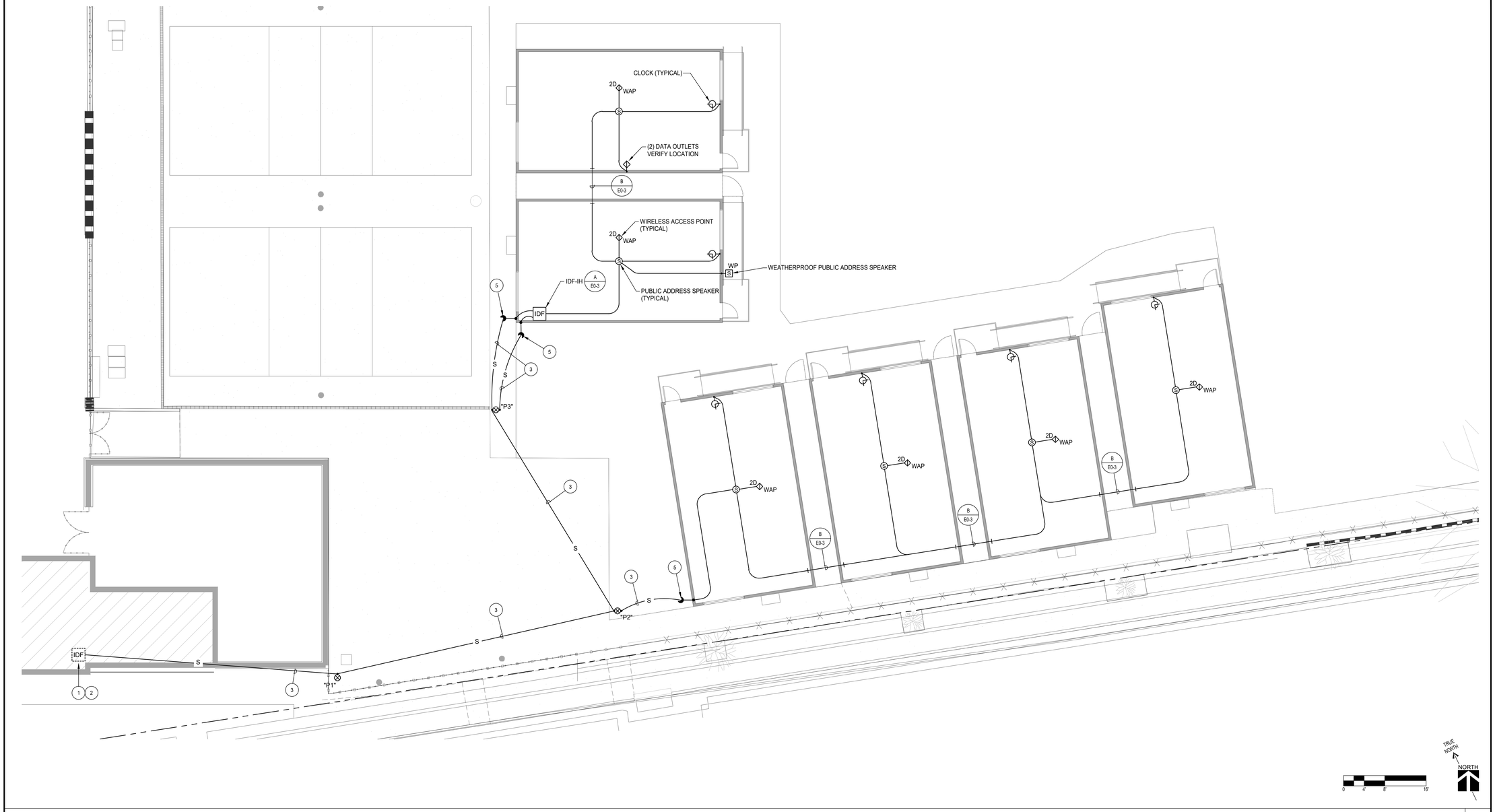


ENLARGED SITE TELECOM PLAN 1
SCALE: 1/8"=1'-0"

## SITE PERFORMANCE NOTES

1. ELECTRICAL CONTRACTOR SHALL EXERCISE EXTREME CAUTION IN EXCAVATING AND TRENCHING ON THIS SITE TO AVOID EXISTING DUCTS, PIPING OR CONDUITS, ETC., AND TO PREVENT HAZARD TO PERSONNEL AND/OR DAMAGE TO EXISTING UNDERGROUND UTILITIES OR STRUCTUREs WHETHER OR NOT SHOWN OR DETAILED AND INSTALLED BY THIS OR ANY OTHER CONTRACTS. THE CONTRACTOR SHALL IMMEDIATELY NOTIFY THE DISTRICT SHOULD SUCH UNIDENTIFIED CONDITIONS BE DISCOVERED. THESE DRAWINGS AND SPECIFICATIONS DO NOT INCLUDE NECESSARY COMPONENTS FOR CONSTRUCTION SAFETY.
2. REFER TO CIVIL ENGINEER'S GRADING PLANS FOR NEW GRADES. AT ALL EXISTING TO REMAIN PULLBOXES/VAULTS, ADJUST HEIGHT OF PULLBOX/VAULT COVER TO BE FLUSH WITH NEW GRADE OR FINISHED SURFACE. PROVIDE ADDITIONAL NECKING TO COMPLY WITH THIS PROVISION.
3. ALL NEW AND EXISTING PULLBOX/VAULT COVERS INDICATED ON THESE PLANS, SHALL HAVE A NON-SLIP COATING, JENSEN "TRAX PLATE" OR EQUIVALENT.
4. ALL NEW ELECTRICAL/COMMUNICATIONS DUCT BANKS SHALL BE INSTALLED 24" MIN. BELOW FINISH GRADE. SEE DETAILS D & E ON E-0.2.
5. ALL NEW AND EXISTING CONDUIT CABLING AND CONDUCTOR RUNS ARE SHOWN DIAGRAMMATICALLY. CONTRACTOR SHALL FIELD VERIFY THE EXISTING CONDITIONS AND PROVIDE ALL CABLING/CONDUCTORS OF SUFFICIENT LENGTH FOR COMPLETE END TO END CONNECTIONS.

## PLAN NOTES

1. MODIFY THE EXISTING IDF TO ACCOMMODATE THE NEW CONSTRUCTION.
2. MODIFY THE EXISTING TELECOMMUNICATIONS RACK TO ACCOMMODATE THE NEW CONSTRUCTION. PROVIDE ALL COMPONENTS AND PROGRAMMING FOR A COMPLETE INSTALLATION.
3. PROVIDE OUTDOOR AERIAL RATED CABLES FOR THE FOLLOWING SYSTEMS:
   - FIBER OPTIC
   - INTERCOM/PAGING/PUBLIC ADDRESS/CLOCK
   - TELEPHONE
4. PROVIDE AND INSTALL NEW WALL MOUNTED WEATHERPROOF SIGNAL SYSTEMS PULLBOX WITH SCREW COVER. COVER TO READ "SIGNAL SYSTEMS". CONDUIT EXPOSED ON THE EXTERIOR OF BUILDING STUBBED INTO EXISTING CEILING SPACE, SEAL ALL WALL PENETRATIONS. PAINT TO MATCH SURROUNDING SURFACES.
5. PROVIDE FOUR (4) 2" DIA. WEATHER HEADS FOR SIGNAL SYSTEMS CABLES. EXTEND SIGNAL SYSTEM CONDUCTORS FROM POLE TO WEATHER HEAD. SEE POLE DETAILS ON SHEET E0-3 FOR ADDITIONAL INFORMATION.

## LEGEND

| | |
|---|---|
| (N) | NEW |
| (E) | EXISTING |
| IDF | INTERMEDIATE DISTRIBUTION FRAME |


A# 03 - 124890
DIVISION OF THE STATE ARCHITECT
355 S. GRAND AVE, SUITE 2100
LOS ANGELES, CA 90071
ph: 213.897.3995 fx: 213.897.3159/0726
agency

tBP
architecture
planning
interiors

tBP/Architecture
4611 Teller Avenue
Newport Beach, CA 92660
ph: 949.673.0300
architect

FBA Engineering
Consulting Electrical Engineers
150 Paularino Avenue Suite A120
Costa Mesa, CA 92626
949.852.9995 • 949.852.1657 (fax)
fbaengr.com
FBA Job Number: 212.328


REGISTERED PROFESSIONAL ENGINEER
STEPHEN R. ZAJTCHUK
No. E 10372
Exp. 09-30-25
ELECTRICAL
STATE OF CALIFORNIA
2/25/2025
consultant

# ARCADIA HIGH SCHOOL LOCKER ROOM INTERIM HOUSING

ARCADIA UNIFIED SCHOOL DISTRICT
180 CAMPUS DRIVE
ARCADIA, CALIFORNIA 91006

owner

tBP project number : 21196.00
file name:
drawn by: checked by:
date: 11/18/2024

| Rev: | date: | description: |
|---|---|---|
| | | |
| | | |
| | | |
| | | |
| | | |
| | | |


THIS DRAWING AND THE DESIGNS, DEPICTIONS, IDEAS AND OTHER INFORMATION CONTAINED HEREIN CONSTITUTE UNPUBLISHED WORK OF tBP/ARCHITECTURE AND SHALL REMAIN THE PROPERTY OF tBP/ARCHITECTURE IN PERPETUITY. NO PART THEREOF SHALL BE REPRODUCED, DISCLOSED, DISTRIBUTED, SOLD, PUBLISHED OR OTHERWISE USED IN ANY WAY WITHOUT THE ADVANCED EXPRESS WRITTEN CONSENT OF tBP/ARCHITECTURE.


drawing title:
ENLARGED SITE TELECOM PLAN

drawing no.:
E-1.2


FBA Engineering / Plot Date: 2/25/2025 4:13 PM / Plotted by: Don Fleischman / Drawing Location: I:\212\328\E1-2_Enlarged Site Telecomm Plan.dwg

# FIRE ALARM SYSTEM EQUIPMENT SCHEDULE

EDWARDS EST3

| QTY | SYMBOL | DESCRIPTION | MANUFACTURER MODEL NO.# | MNT. HEIGHT REQ. | BACKBOX REQ. | CSFM NO.# | NOTES |
|---|---|---|---|---|---|---|---|
| EX | | EXISTING FIRE ALARM CONTROL PANEL A# 03-114941 | EDWARDS EST3 SERIES | - | - | - | |
| 1 | | 10AMP NAC EXPANDER PANEL "RPS_" | EDWARDS BPS10A | +66" A.F.F. TO TOP OF BACKBOX | BACKBOX INCL. | 7300-1657-0229 | |
| 1 | CM | ADDRESSABLE CONTROL MODULE | EDWARDS SIGA-CC1S | FIELD VERIFY LOC. | 4S DEEP BOX W/EXT. RING | 7300-1657:0121 | |
| 6 | P | FA ADDRESSABLE MANUAL PULL STATION-SINGLE ACTION | EDWARDS SIGA-270 | +48" A.F.F. TO TOP OF BOX | 4S BOX W/ 1 GANG RING | 7150-1657:0129 | |
| 1 | | FA ADDRESSABLE PHOTOELECTRIC SMOKE DETECTOR | EDWARDS SIGA-PD | FLUSH ON CEILING | 4S BOX W/3-0 GANG RING | 7272-1657:0330 | |
| 2 | WP | FA EXTERIOR WALL HORN (WEATHERRPOOF) | EDWARDS WG4RF-H | WALL MNT. +90" A.F.G. TO TOP OF BOX | WP BACKBOX | 7135-1657:0522 | |
| 8 | #cd | FA CEILING HORN/STROBE (#cd DENOTES CANDELA RATING) | GENESIS EGCAVRF | FLUSH ON CEILING | 4S BOX WITH 4S EXT. RING | 7125-1657:0510 | |
| | | | | | | | |

# FIRE ALARM SYSTEM SEQUENCE OF OPERTATIONS

| | SYSTEM OUTPUTS \ SYSTEM INPUTS | MANUAL PULL STATION | AREA SMOKE DETECTOR | FIRE ALARM 120VAC POWER FAILURE | FIRE ALARM SYSTEM LOW BATTERY | OPEN CIRCUIT | GROUND FAULT | NAC CIRCUIT SHORT | NOTES |
|---|---|---|---|---|---|---|---|---|---|
| A | ANNUNCIATE ALARM CONDITION AT MAIN FIRE ALARM PANEL AND REMOTE ANNUNCIATOR | X | X | | | | | | |
| B | ANNUNCIATE SUPERVISORY CONDITION AT FIRE ALARM CONTROL PANEL AND REMOTE ANNUNCIATOR | | | | | | | | |
| C | ANNUNCIATE AND SOUND FACP BUZZER ON TROUBLE CONDITION AT FIRE ALARM CONTROL PANEL | WIRING FAULT | WIRING FAULT | X | X | X | X | X | [1] |
| D | ACTIVATE ALL NOTIFICATION AUDIBLE/VISUALS THROUGHOUT THE FACILITY/CAMPUS ON ALARM | X | X | | | | | | |
| E | TRANSMIT ALARM, TROUBLE OR SUPERVISORY SIGNALS TO 24HR CENTRAL MONITORING STATION | X | X | X | X | X | X | X | |

NOTES:

[1] INDICATE TROUBLE ON WIRING FAULT OR DEVICE AS REQUIRED.

*** FIRE ALARM SYSTEM SHALL TRANSMIT THE ALARM, SUPERVISORY AND TROUBLE SIGNALS THROUGH THE TELEPHONE LINES TO AN APPROVED MONITOR COMPANY IN ACCORDANCE WITH NFPA 72. THE MONITOR COMPANY SHALL BE LISTED AS EITHER UUFX (CENTRAL STATION) OR UUJS (REMOTE & PROPRIETARY) BY THE UNDERWRITERS LABORATORY INC. ***

# CONDUIT SLEEVE SEISMIC DETAIL

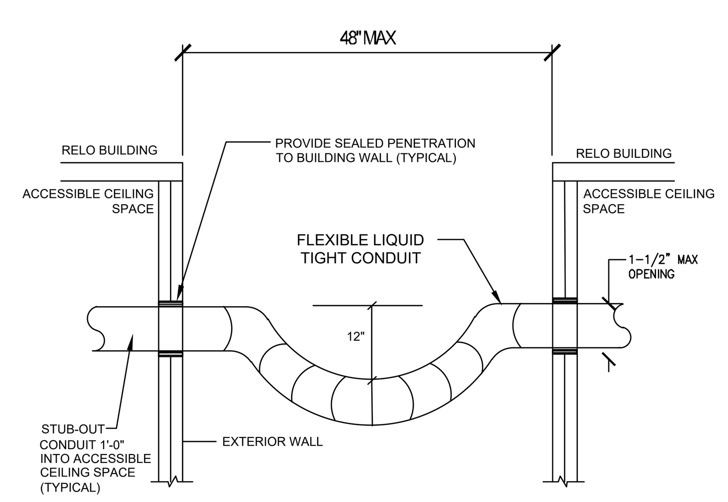


# MANUAL PULL STATION DETAIL

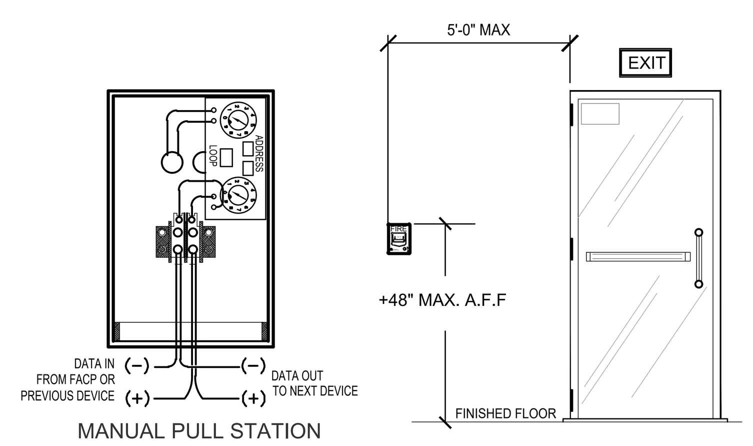


MANUAL PULL STATION

# SMOKE DETECTOR DETAIL

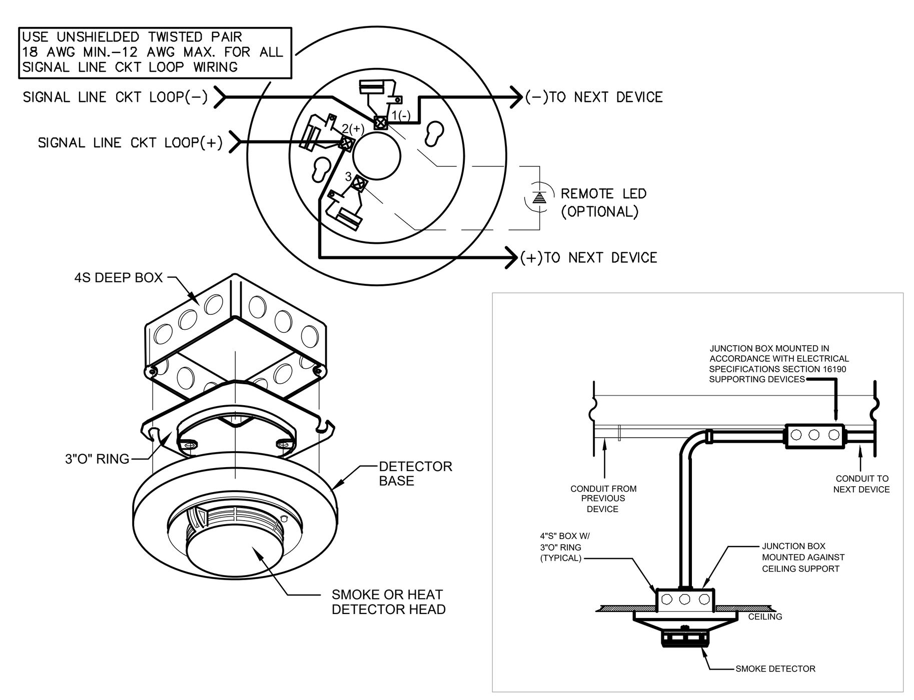


# HORNSTROBE DETAIL

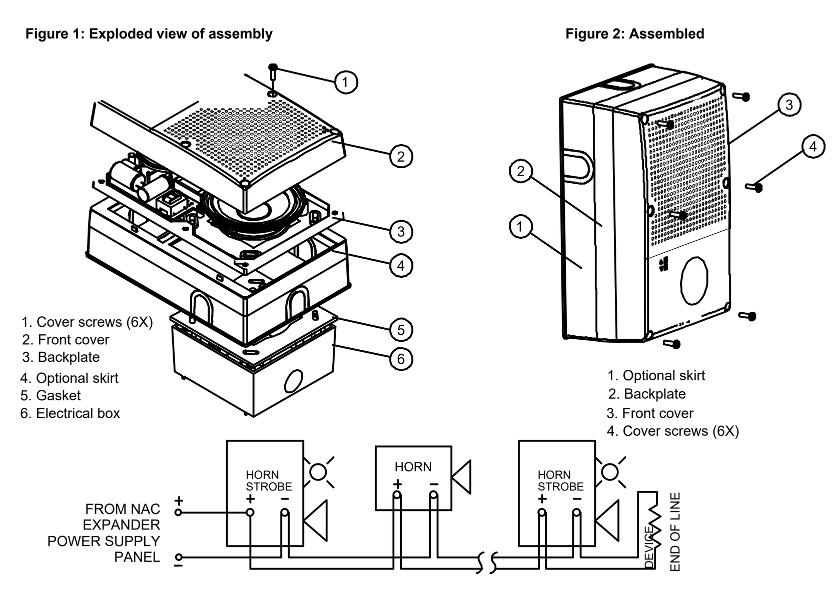


# FIRE ALARM SYSTEM CALCULATIONS

EXISTING FIRE ALARM BATTERY BACK-UP CALCULATION-(EST3-A# 03-114941)

| QTY | DEVICE | STAND-BY | ALARM |
|---|---|---|---|
| | EXISTING FACP PANEL CURRENT LOAD = A# 03114941 | 0.2950 | 2.1910 |
| | SUB-TOTAL-A | 0.2950 | 2.1910 |
| 1 | NEW SMOKE DETECTOR | 0.0003 | 0.0020 |
| 6 | NEW PULL STATION | 0.0018 | 0.0120 |
| 1 | NEW CONTROL MODULE | 0.0004 | 0.0065 |
| | SUB-TOTAL-B | 0.0025 | 0.0205 |
| | SUB-TOTAL-A | 0.2950 | 2.1910 |
| | + | + | + |
| | SUB-TOTAL-B | 0.0025 | 0.0205 |
| | TOTAL LOAD = | 0.2975 | 2.2115 |

TOTAL STAND-BY LOAD X 24 HOURS = 0.297 X 24 = 7.139 A-HR
TOTAL ALARM CURRENT X 5 MINUTES = 2.212 X 0.083 = 0.184 A-HR
TOTAL ADDITIONAL MINIMUM AMP HOURS OF BATTERIES = 7.323 A-HR
25% ADDITIONAL LOAD TO MINIMUM AMP HOURS OF BATTERIES = 8.788 A-HR

NOTES:
1. BATTERY CALCULATION IS BASED ON 24 HOURS OF STAND BY AND 5 MINS OF ALARM TIME
2. PROVIDE MINIMUM OF 18 A-HOURS ADDITIONAL STANDBY BATTERY POWER.

NOTIFIER PSE-6 NAC EXPANDER PANEL "RPS"

| NAC PANEL RPS | NAC CKT | LOCATION | STAND BY CURRENT (AMPS) | ALARM CURRENT (AMPS) | VDROP% |
|---|---|---|---|---|---|
| PSE-6 MAIN CIRCUIT BRD-WITH 4.7k EOL | | | 0.1390 | 0.1570 | |
| EOLR-1 POWER SUPV. RELAY | | | 0.0200 | 0.0200 | |
| NAC / OUTPUT #1 - | AV1 | INTERIM HOUSING | 0.0000 | 0.3780 | 1.07 |
| NAC / OUTPUT #2 - | AV2 | INTERIM HOUSING | 0.0000 | 0.9160 | 3.71 |
| | | TOTAL CURRENT DRAW= | 0.1590 | 1.4710 | |

TOTAL STAND-BY CURRENT X 24 HOURS 0.1590 X 24 = 3.816 A-HR
TOTAL ALARM CURRENT X 5 MINUTES 1.4710 X 0.083 = 0.122 A-HR
BATTERY CHARGING MAX-33ah
TOTAL MINIMUM AMP HOURS OF BATTERIES = 3.938 A-HR
ADDITIONAL 25% DERATING SAFETY FACTOR = 4.9226 A-HR
MINIMUM SIZE BATTERY REQUIRED = 10.0 A-HR

NOTES:
1. BATTERY CALCULATION BASED ON 24 HOURS OF STAND BY AND 5 MINS. OF ALARM TIME
2. PROVIDE MINIMUM OF (2) 12VOLT-10 AH BATTERIES FOR SECONDARY BACKUP POWER.

# DSA FIRE WATCH NOTES

**PURPOSE:** THIS INTERPRETATION OF REGULATIONS (IR) CLARIFIES CODE REQUIREMENTS BASED ON THE CALIFORNIA BUILDING CODE (CBC), CALIFORNIA FIRE CODE (CFC) AND CALIFORNIA CODE OF REGULATIONS (CCR) TITLE 19 AS RELATED TO NON-OPERABLE FIRE PROTECTION/LIFE SAFETY SYSTEMS REQUIRING A FIRE WATCH.

**BACKGROUND:** 2022 CFC SECTION 901.7 AND CCR TITLE 19 SECTION 1.14 REQUIRE FIRE DETECTION AND ALARM SYSTEMS, FIRE HYDRANT SYSTEMS, EXTINGUISHING SYSTEMS, MECHANICAL SMOKE EXHAUST SYSTEMS, AND SMOKE AND HEAT VENTS TO BE MAINTAINED IN AN OPERATIVE CONDITION AT ALL TIMES. CFC SECTION 901.7 DIRECTS THAT WHEN A FIRE PROTECTION SYSTEM IS OUT OF SERVICE, THE FIRE DEPARTMENT AND FIRE CODE OFFICIAL BE NOTIFIED IMMEDIATELY AND THE SCHOOL DISTRICT SHALL ESTABLISH A FIRE WATCH. FOR PURPOSES OF APPLICATION, THE DIVISION OF THE STATE ARCHITECT (DSA) IS THE FIRE CODE OFFICIAL.

**SCOPE:** DURING THE COURSE OF A CONSTRUCTION PROJECT UNDER THE JURISDICTION OF DSA, DSA IS THE FIRE CODE OFFICIAL. THE SCOPE OF THIS IR IS CONFINED TO THOSE SITUATIONS WHERE DSA HAS JURISDICTION. GENERAL: IT IS THE INTENT OF THE CFC THAT FIRE PROTECTION/LIFE SAFETY SYSTEMS IN SCHOOLS BE MAINTAINED AND FULLY OPERABLE AT ALL TIMES. IN THE EVENT THAT A PUBLIC SCHOOL (GRADES K-12 OR COMMUNITY COLLEGES) WITHIN THE JURISDICTION OF DSA HAS A FIRE PROTECTION/LIFE SAFETY SYSTEM THAT IS NOT OPERATING IN A DEPENDABLE MANNER, THAT CAMPUS, OR THE AFFECTED PORTION OF THE CAMPUS, SHALL BE PROVIDED A "FIRE WATCH."

A FIRE WATCH IS INTENDED AS A TEMPORARY ALTERNATE TO A FIRE PROTECTION/LIFE SAFETY SYSTEM AND ALLOWS A BUILDING TO BE TEMPORARILY OCCUPIED WHILE THE FIRE PROTECTION SYSTEM IS OUT OF SERVICE. THE PURPOSE OF A FIRE WATCH IS TO PROTECT HUMAN LIFE AND PROPERTY AND TRANSMIT AN IMMEDIATE ALARM TO THE BUILDING OCCUPANTS AND FIRE DEPARTMENT. 2019 CFC, CHAPTER 9, SECTION 901.7, DIRECTS THAT WHERE UTILIZED, FIRE WATCHES SHALL BE PROVIDED WITH AT LEAST ONE APPROVED MEANS FOR NOTIFYING THE FIRE DEPARTMENT. THE SOLE DUTY OF THE FIRE WATCH SHALL BE DEDICATED TO PERFORMING CONSTANT PATROLS OF THE PROTECTED PREMISES AND KEEP WATCH FOR EVIDENCE OF FIRES SUCH AS SMOKE OR FLAMES.

1. **REQUIRED FIRE WATCH:** WHEN, AS PART OF AN ALTERATION OR MODERNIZATION PROJECT OR CONSTRUCTION OF A NEW BUILDING A FIRE PROTECTION/LIFE SAFETY SYSTEM IS PLACED OUT OF SERVICE AND AFFECTS ANY OCCUPIED PORTION OF AN EXISTING BUILDING UNDERGOING RENOVATION OR OCCUPIED BUILDINGS OR PORTIONS OF THE CAMPUS, THEN THE SCHOOL DISTRICT, DSA, AND THE ARCHITECT/ENGINEER IN GENERAL RESPONSIBLE CHARGE OF THE CONSTRUCTION PROJECT SHALL BE NOTIFIED IMMEDIATELY BY THE PROJECT INSPECTOR. IT WILL BE THE SCHOOL DISTRICT'S RESPONSIBILITY TO ESTABLISH, INSTRUCT AND MAINTAIN FIRE WATCH PERSONNEL IN/AT THE AFFECTED BUILDING(S). WHERE A FIRE ALARM SYSTEM IS OUT OF SERVICE, WARNING SIGNS SHALL BE POSTED AT ALL ENTRANCES TO ANY BUILDING TO INFORM THE OCCUPANTS (SEE PARAGRAPH 1.3).

MODERNIZATIONS OF EXISTING BUILDINGS OR CONSTRUCTION OF NEW BUILDINGS THAT ARE NOT OCCUPIED BY THE PUBLIC, STAFF OR STUDENTS DURING CONSTRUCTION, SHALL NOT REQUIRE A FIRE WATCH AS LONG AS THE CONSTRUCTION EFFORTS DO NOT AFFECT OTHER OCCUPIED AREAS OF THE BUILDING.

**1.1 FIRE WATCH PLAN:** THE SCHOOL DISTRICT SHALL DEVELOP A FIRE WATCH PLAN WITH THE APPLICABLE BUILDING(S) IDENTIFIED ON A SITE AND BUILDING PLAN, AND COORDINATE WITH THE LOCAL FIRE DEPARTMENT. WHEN REQUESTED, THE SCHOOL DISTRICT SHALL PROVIDE A COPY OF THE FIRE WATCH PLAN TO THE DSA FIELD ENGINEER FOR THE REGION IN WHICH THE CONSTRUCTION IS TAKING PLACE. A COPY OF THE FIRE WATCH PLAN SHALL BE MADE AVAILABLE TO THE LOCAL FIRE AUTHORITY UPON REQUEST.

**1.2 REQUIREMENTS OF A FIRE WATCH PLAN:**

- INCLUDE A PROCEDURE FOR NOTIFYING THE FIRE DEPARTMENT AND OTHER CONTACTS DEEMED NECESSARY BY THE SCHOOL DISTRICT FOR NOTIFICATION.
- INDICATE AREA(S) TO BE PATROLLED AND LOCATIONS OF PORTABLE FIRE EXTINGUISHERS, MEANS OF EGRESS AND AREAS OF SPECIAL HAZARDS. IF A KITCHEN HOOD EXTINGUISHING SYSTEM IS INCLUDED IN THE NON-OPERABLE ALARM SYSTEM, THE KITCHEN SHALL BE INCLUDED IN THE PATROL ROUTE DURING COOKING ACTIVITIES.
- THE METHOD OF SOUNDING AN ALARM SHALL BE DESCRIBED TO INITIATE THE EVACUATION OF BUILDING(S). THE MANNER OF ALARM SHALL BE CONVEYED TO STAFF AND STUDENTS.
- DETERMINE AT LEAST ONE MEANS OF DIRECT COMMUNICATION WITH THE LOCAL FIRE DEPARTMENT; A TELEPHONE/CELL PHONE IS ACCEPTABLE PROVIDED THAT A TEST RUN OF THE DESIGNATED ROUTES VERIFIES SIGNAL STRENGTH OF THE CELL PHONE AT ALL LOCATIONS.

**1.3 POSTING:** SIGNS SHALL STATE,

"WARNING, FIRE ALARM SYSTEM IS CURRENTLY INOPERABLE.
A FIRE WATCH IS BEING CONDUCTED.
FIRE WATCH PERSONNEL WILL NOTIFY YOU BY
(STATE MEANS OF NOTIFICATION.)
IN THE EVENT THAT BUILDING EVACUATION IS REQUIRED."

**1.4 FIRE WATCH PERSONNEL:** THE SCHOOL DISTRICT SHALL DESIGNATE THE FIRE WATCH PERSONNEL WHO ARE FAMILIAR WITH AND ARE ABLE TO PERFORM THE DUTIES AS DESCRIBED IN THE FIRE WATCH PLAN. THE FIRE WATCH PERSONNEL SHALL NOT PERFORM FIREFIGHTING DUTIES BEYOND THE SCOPE OF AN ORDINARY CITIZEN. (USE OF PORTABLE FIRE EXTINGUISHERS IS PERMITTED, PROVIDED PROPER TRAINING IN THE USE OF FIRE EXTINGUISHERS HAS BEEN RECEIVED AND FIRE WATCH PERSONNEL FEEL CONFIDENT IN THEIR ABILITY TO SUPPRESS A FIRE.)

**1.5 THE FIRE WATCH PERSONNEL DUTIES:** DUTIES SHALL INCLUDE, BUT NOT BE LIMITED TO, THE FOLLOWING:

- FIRE WATCH PERSONNEL ARE TO BE THOROUGHLY FAMILIAR WITH FACILITIES AND AREAS THEY ARE PATROLLING. ROUTE SHALL BE A ROVING AND CONTINUOUS OBSERVATION OF THE ENTIRE FACILITY AT LEAST ONCE EACH HOUR. WHERE HAZARDOUS OPERATIONS (WELDING, USE OF OPEN FLAME) ARE OCCURRING, THE FREQUENCY SHALL BE EVERY THIRTY MINUTES.
- IDENTIFY ANY FIRE, LIFE OR PROPERTY HAZARDS TO APPROPRIATE CONTACT PER THE FIRE WATCH PLAN.

IF A FIRE IS DISCOVERED, THE FIRE WATCH SHALL IMMEDIATELY:

- NOTIFY THE FIRE DEPARTMENT.
- NOTIFY OCCUPANTS OF THE FACILITY OF THE NEED TO EVACUATE BY A PREDESCRIBED SIGNAL AS OUTLINED IN 1.2 ABOVE. IF THE HORNS OR PUBLIC ADDRESS FUNCTION OF THE ALARM SYSTEM ARE STILL FUNCTIONAL, USE THEM TO ASSIST WITH EVACUATION OF THE BUILDING.

- FOLLOW THE PROVISIONS OF THE FIRE WATCH PLAN.
- HAVE KNOWLEDGE OF THE LOCATION AND USE OF FIRE PROTECTION EQUIPMENT SUCH AS FIRE EXTINGUISHERS.
- BE FAMILIAR WITH AND MANUALLY ACTIVATE FIRE DOOR RELEASES AND/OR STAGE ROOF VENTS OR STAGE FIRE CURTAIN AS NECESSARY WHEN, IN THE JUDGMENT OF THE FIRE WATCH PERSONNEL, THOSE PORTIONS OF THE BUILDING ARE AFFECTED.
- UPDATE THE FIRE WATCH LOG AT THE CONCLUSION OF EACH FIRE WATCH ROUTE.

**1.6 FIRE WATCH LOG:** A FIRE WATCH LOG SHOULD BE MAINTAINED AT THE FACILITY AND AVAILABLE TO THE LOCAL FIRE DEPARTMENT AND DSA FIELD STAFF AT ALL TIMES DURING THE FIRE WATCH. THE SCHOOL DISTRICT SHALL DETERMINE THE SPECIFIC HOURS THE FIRE WATCH WILL BE ON DUTY. AT A MINIMUM, THE FIRE WATCH SHALL BE ON DUTY DURING ALL PERIODS WHEN THE BUILDING(S) IS/ARE OCCUPIED.

THE LOG SHALL CONTAIN A DIRECTORY OF CONTACT NAMES, TELEPHONE NUMBERS AND OTHER INFORMATION NECESSARY FOR MAKING EMERGENCY CALLS.

THE LOG SHALL INDICATE THE FOLLOWING:

- ADDRESS OF THE FACILITY.
- NAME OF THE PERSON CONDUCTING THE FIRE WATCH.
- TIMES THAT THE PATROL HAS COMPLETED EACH TOUR OF THE FACILITY.
- RECORD OF COMMUNICATION(S) TO THE FIRE DEPARTMENT.

2. **TERMINATION OF FIRE WATCH:** WHERE THE FIRE WATCH IS REQUIRED DUE TO A FIRE ALARM SYSTEM INSTALLATION OR MODIFICATION, THE COMPLETED OR REPAIRED FIRE ALARM SYSTEM SHALL BE TESTED PER NATIONAL FIRE PROTECTION (NFPA) STANDARD 72 AND THE SYSTEM MANUFACTURER'S INSTALLATION REQUIREMENTS. TESTING AND INSPECTION OF THE SYSTEM SHALL BE DOCUMENTED UTILIZING THE NFPA 72 TESTING AND INSPECTION FORM. THE PROJECT INSPECTOR SHALL SUBMIT TO THE SCHOOL DISTRICT, A/E IN GENERAL RESPONSIBLE CHARGE, THE LOCAL FIRE AUTHORITY AND DSA, AS APPLICABLE, COPIES OF THE NFPA 72 "RECORD OF COMPLETION."

- IT IS THE SCHOOL DISTRICT'S RESPONSIBILITY TO CANCEL THE FIRE WATCH ONCE THE FIRE PROTECTION SYSTEM HAS BEEN DEEMED OPERABLE AS COMMUNICATED BY THE PROJECT INSPECTOR.
- ONCE THE FIRE WATCH HAS BEEN CANCELED, THE PROJECT INSPECTOR SHALL:
  - NOTIFY THE LOCAL FIRE DEPARTMENT.
  - NOTIFY DSA FIELD ENGINEER.
  - VERIFY REMOVAL OF SIGNS.

# CABLE/WIRE SCHEDULE-WIRE FILL CHART

## CABLE / WIRE SCHEDULE

| TAG | CIRCUIT | CONDUCTORS | TYPE | MIN. SIZE CONDUIT |
|---|---|---|---|---|
| AV | AUDIBLE-VISUAL | 2 #12AWG (SOLID) | THHN | 3/4"C. |
| Z | SLC LOOP | 2 #16AWG TWISTED | FPLR | 3/4"C. |

ALL FIRE ALARM SYSTEM CABLING-WIRE-CONDUCTORS SHALL BE INSTALLED IN RED CONDUIT. MINIMUM SIZE CONDUITS SHALL BE 3/4".

OVERHEAD

| TAG | CIRCUIT | CONDUCTORS | TYPE | MIN. SIZE CONDUIT |
|---|---|---|---|---|
| AVU | AUDIBLE-VISUAL | 2 #12AWG (SOLID) | THWN | 1-1/4"C |
| ZU | SLC LOOP | 2 #16AWG TWISTED | AQUASEAL | 1-1/4"C |

ALL UNDERGROUND CABLING / WIRE SHALL BE TYPE THWN OR AQUASEAL TYPE APPROVED FOR WET LOCATIONS. MINIMUM SIZE FOR UNDERGROUND CONDUITS SHALL BE 1-1/4"

1. FIRE ALARM CONDUCTORS USED IN WET OR UNDERGROUND LOCATIONS SHALL COMPLY WITH ONE OF THE FOLLOWING:

a) Be moisture-impervious metal-sheathed
b) Be types MTW, RHW, RHW-2, TW, THW, THW-2, THHW, THHW-2, THWN, THWN-2, XHHW, XHHWW-2, ZW
c) Be of a type listed for use in wet locations.

## WIRE-FILL CHART

Dimensions of Insulated Conductors and fixture wires

| Conductor Size AWG | 12 AWG THHN/THWN | 14 AWG THHN/THWN | 16 AWG TFN/TFFN | 18 AWG TFN/TFFN |
|---|---|---|---|---|
| Area (in²) | .0133 | .0097 | .0072 | .0055 |

Total Areas of Electrical Metallic Tubing

| | 1/2" Conduit | 3/4" Conduit | 1" Conduit | 1-1/4" Conduit | 1-1/2" Conduit | 2" Conduit |
|---|---|---|---|---|---|---|
| Total Area | .304 in² | .533 in² | .864 in² | 1.496 in² | 2.036 in² | 3.356 in² |
| 40% Fill | .122 in² | .213 in² | .346 in² | .598 in² | .814 in² | 1.342 in² |

| Conductor Size AWG | 1/2" Conduit | 3/4" Conduit | 1" Conduit | 1-1/4" Conduit | 1-1/2" Conduit | 2" Conduit |
|---|---|---|---|---|---|---|
| 18 | 22 | 38 | 62 | 108 | 148 | 244 |
| 16 | 16 | 29 | 48 | 83 | 113 | 186 |
| 14 | 12 | 22 | 35 | 61 | 84 | 138 |
| 12 | 9 | 16 | 26 | 45 | 61 | 101 |

Maximum Number of Conductors in Trade Sizes of Conduit or Tubing (Based on 40% Conduit Fill)

# NAC CIRCUIT VOLTAGE DROP CALCULATIONS

| VOLTAGE DROP CALCULATION | CIRCUIT LOCATION | INTERIM HOUSING | | INTERIM HOUSING | | |
|---|---|---|---|---|---|---|
| | | CIRCUIT | PANEL | CIRCUIT | PANEL | |
| | | AV1 | RPS | AV2 | RPS | |
| | | QTY | CURR. | QTY | CURR. | |
| Ceiling Horn/Strobes | Draw (Amps) | | | | | QTY |
| 75cd - 44X44 | 0.189 | 2 | 0.378 | 4 | 0.756 | 6 |
| Exterior Horn | 0.080 | | 0.000 | 2 | 0.160 | 2 |
| CIRCUIT CURREN DRAW (AMPS) | | 0.378 | AMPS | 0.916 | AMPS | |
| MAX. WIRE LENGTH | | 175 | FT. | 250 | FT. | |
| % VOLTAGE DROP | | 1.07 | % | 3.71 | % | |
| WIRE SIZE (CIRC. MILLS) | # AWG | 12 | 6530 | 12 | 6530 | |

# APPLICABLE CODES-STANDARDS

FIRE ALARM COMPLETE PLAN SUBMITTAL

FIRE ALARM SUBMITTAL IS A COMPLETE PLAN SUBMITTAL IN ACCORDANCE WITH CFC-901.1 AND 907.1.1.

1.0 PROJECT INFORMATION

A. OCCUPANCY GROUP:
REFER TO ARCHITECTURAL DRAWINGS.

B. CONSTRUCTION TYPE:
REFER TO ARCHITECTURAL DRAWINGS.

C. UPON COMPLETION OF SYSTEM INSTALLATION, THE SYSTEM SHALL BE TESTED IN THE PRESENCE OF AND IN A MANNER ACCEPTABLE TO THE ENFORCING AGENCY.

D. THE FIRE ALARM SYSTEM DESIGN FOR THIS PROJECT IS MANUAL SYSTEM WITH MASS NOTIFICATION. (NON-VOICE FOR INTERIM HOUSING PROJECT)

2.0 APPLICABLE CODES AND STANDARDS

2022 California Administrative Code (CAC), P[art 1, Title 24 CCR
2022 California Building Code (CBC), Part 2, Title 24 CCR
2022 California Electrical Code (CEC), Part 3, Title 24 CCR
2022 California Mechanical Code (CMC), Part 4, Title 24 CCR
2022 California Plumbing Code (CPC), Part 5, Title 24 CCR
2022 California Energy Code, Part 6, Title 24 CCR
2022 California Fire Code (CFC), Part 9, Title 24 CCR
2022 California Existing Building Code (CEBC), Part 10, Title 24 CCR
2022 California Green Building Standards Code (CalGreen), Part 11, title 24 CCR
2022 California Referenced Standards Code, Part 12, title 24 CCR Title 19 CCR, Public Safety, State Fire Marshal Regulations Applicable Standards

For a list of applicable standards, including California Amendments to the NFPA Standards, refer to 2022-CBC Chapter 35 and C2022-FC Chapter 80.

B. PARTIAL LIST OF APPLICABLE STANDARDS

NFPA 72 NATIONAL FIRE ALARM AND SIGNALING CODE (CA AMENDED) 2022 EDITION

3.0 PROJECT NOTES:

1.0 FIRE ALARM CONTRACTOR AWARDED THE PROJECT SHALL PROVIDE AND SUBMIT TO THE EOR, DISTRICT REPRESENTATIVE/OWNER THE EXISTING FIRE ALARM SYSTEM PROGRAM PRINTOUT (HARDCOPY) PRIOR TO INSTALLATION.

2.0 UPON RECEIPT OF THE CERTIFICATE OF COMPLIANCE, THE INSTALLER SHALL SUPPLY THE OWNER/DISTRICT REPRESENTATIVE, WITH WRITTEN OPERATING, TESTING AND MAINTENANCE INSTRUCTIONS, POINT-TO-POINT AS -BUILT RECORD DRAWINGS/[PLANS, FIRE ALARM SYSTEM PROGRAM PRINTOUT (HARDCOPY) AND EQUIPMENT SPECIFICATIONS.

4.0 IF APPLICABLE TO THE PROJECT, THE EXISTING FIRE ALARM SYSTEM SHALL REMAIN OPERATIONAL DURING THE BUILDING MODERNIZATION CONSTRUCTION UNTIL THE NEW FIRE ALARM SYSTEM IS INSTALLED, COMMISSIONED AND FULLY OPERATIONAL. UPON COMPLETE FINAL TEST AND APPROVAL OF THE NEW SYSTEM, THE EXISTING FIRE ALARM SYSTEM AND ALL ASSOCIATED EXISTING SUB PANELS, ANNUNCIATORS, DEVICES, CONDUITS, CABLING SHALL BE DISCONNECTED, REMOVED AS REQUIRED PER THE PROJECT SCOPE AND/OR PROJECT SPECIFICATIONS.

# DSA ADDITIONAL NOTES

1. APPLICABLE STANDARD NFPA STANDARD 72 (2022) AS AMENDED IN CBC CHAPTER 35.
2. INSTALLATION OF THE SYSTEMS SHALL NOT BE STARTED UNTIL DETAILED DESIGN DOCUMENTS AND SPECIFICATIONS, INCLUDING STATE FIRE MARSHAL LISTING NUMBERS FOR EACH COMPONENT OF THE SYSTEM HAS BEEN APPROVED BY DSA.
3. UPON COMPLETION OF THE INSTALLATION OF THE SYSTEMS, A SATISFACTORY TEST OF THE ENTIRE SYSTEM SHALL BE MADE IN THE PRESENCE OF A DSA PROJECT INSPECTOR (PJ).
4. A STAMPED SET OF APPROVED FIRE ALARM DESIGN DOCUMENTS SHALL BE ON THE JOB SITE AND USED FOR INSTALLATION.
5. ANY DISCREPANCIES BETWEEN THE DRAWINGS AND THE CODE OR RECOGNIZED STANDARDS SHALL BE BROUGHT TO THE ATTENTION OF DSA AND THE ARCHITECT/ENGINEER OF THE PROJECT.
6. DSA, ARCHITECT, ENGINEER AND OWNER SHALL BE NOTIFIED A MINIMUM OF 48 HOURS PRIOR TO THE FINAL INSPECTION AND/OR TESTING.
7. WALL MOUNTED AUDIBLE NOTIFICATION DEVICES SHALL HAVE THEIR TOPS MOUNTED AT +90" MINIMUM AND 100" MAXIMUM ABOVE FINISHED FLOOR OR GROUND AND NO CLOSER THEN 6" TO A HORIZONTAL STRUCTURE.
8. AUDIBLE DEVICES SHALL BE SYNCHRONIZED TEMPORAL CODE 3 PATTERN.
9. THE CONTRACTOR SHALL ADJUST/INSTALL ALL DEVICES TO MAXIMIZE PERFORMANCE AND TO MINIMIZE FALSE ALARMS.
10. ALL FIRE ALARM CIRCUITS, WIRING-CABLES SHALL BE FPL (FIRE POWER LIMITED) OR FPLP (FIRE POWER LIMITED PLENUM) AS REQUIRED FOR APPLICATION. ALL CABLE AND WIRING FOR THE FIRE ALARM SYSTEM SHALL BE INSTALLED IN RED CONDUIT. (REFER TO FIRE ALARM CABLE SCHEDULE FOR ADDITIONAL INFORMATION.
11. PER THE CEC, ALL WIRING IS TO BE PULLED THROUGH EACH JUNCTION BOX AND CONNECTED DIRECTLY TO EACH FIRE DEVICE. DO NOT SPLICE THE WIRE. THERE MUST BE AT LEAST 6" OF LEAD WIRE FROM THE BOX TO THE DEVICE. ALL BOXES TO BE SIZED PER CEC.
12. SMOKE DETECTORS SHALL NOT BE ANY CLOSER THAN 1' FOOT FROM FIRE SPRINKLERS OR 3'FEET FROM ANY SUPPLY DIFFUSER. IN THE AREA OF CONSTRUCTION OR WHERE POSSIBLE DAMAGE/CONTAMINATION COULD OCCUR ON NEWLY INSTALLED FIRE ALARM DEVICES, DEVICES SHALL BE COVERED UNTIL THAT AREA IS READY TO BE TURNED OVER TO THE OWNER.
13. FIRE ALARM REMOTE PANELS, SUB-PANELS AND EQUIPMENT,DEVICES SHALL BE MOUNTED AND SECURED TO SURFACES PER MANUFACTURERS SPECIFICATIONS. NO SINGLE BACKBOX OR DEVICE SHALL EXCEED THE WEIGHT OF 20LBS WITHOUT SPECIAL MOUNTING DETAILS.
14. A DEDICATED BRANCH CIRCUIT SHALL BE PROVIDED FOR FIRE ALARM CONTROL AND SUB PANELS PANELS. THIS CIRCUIT SHALL BE ENERGIZED FROM THE COMMON USE AREA PANEL AND SHALL HAVE NO OTHER OUTLETS. THE BREAKER SHALL HAVE A "RED" LOCKING DEVICE TO BLOCK THE HANDLE IN THE "ON" POSITION AND BE LABELED AS FOLLOWS.
   A. "FIRE ALARM" FOR FIRE ALARM SYSTEMS.
   B. "EMERGENCY COMMUNICATIONS" FOR EMERGENCY COMMUNICATIONS SYSTEMS OR
   C. "FIRE ALARM/ECS" FOR COMBINATION FIRE ALARM AND COMMUNICATIONS SYSTEMS.
15. THE INSTALLING CONTRACTOR SHALL PROVIDE A COMPLETED RECORD OF COMPLETION PER THE CURRENT NFPA 72 EDITION (2022), FIGURE 7.8.2(A) THROUGH (I) AS APPLICABLE.

# CENTRAL STATION INFORMATION

CENTRAL STATION MONITORING INFORMATION

MONITORING COMPANY - SSD ALARM
ADDRESS - 1740 LEMON ST. ANAEIM, CA
PHONE # - 800-888-0444
ALARM AGENT# - 98829

-


A# 03 - 124890
DIVISION OF THE STATE ARCHITECT
355 S. GRAND AVE, SUITE 2100
LOS ANGELES, CA 90071
ph: 213.897.3995 fx: 213.897.3159/0726
agency

tBP architecture planning interiors
tBP/Architecture
4611 Teller Avenue
Newport Beach, CA 92660
ph: 949.673.0300
architect

FBA Engineering
Consulting Electrical Engineers
150 Paularino Avenue Suite A120
Costa Mesa, CA 92626
949.852.9995 • 949.852.1657 (fax)
fbaengr.com
FBA Job Number: 212.328

REGISTERED PROFESSIONAL ENGINEER STEPHEN R. ZAJICEK No. E 10372 Exp. 09-30-26 ELECTRICAL STATE OF CALIFORNIA
2/25/2025
consultant


ARCADIA HIGH SCHOOL
LOCKER ROOM INTERIM HOUSING

ARCADIA UNIFIED SCHOOL DISTRICT
180 CAMPUS DRIVE
ARCADIA, CALIFORNIA 91006
owner

tBP project number : 21196.00
file name:
drawn by: checked by:
date: 11/18/2024
Rev: date: description:


THIS DRAWING AND THE DESIGNS, DEPICTIONS, IDEAS AND OTHER INFORMATION CONTAINED HEREIN CONSTITUTE UNPUBLISHED WORK OF tBP/ARCHITECTURE AND SHALL REMAIN THE PROPERTY OF tBP/ARCHITECTURE IN PERPETUITY. NO PART THEREOF SHALL BE REPRODUCED, DISCLOSED, DISTRIBUTED, SOLD, PUBLISHED OR OTHERWISE USED IN ANY WAY WITHOUT THE ADVANCED EXPRESS WRITTEN CONSENT OF tBP/ARCHITECTURE.


drawing title:
FIRE ALARM SYSTEM INFORMATION

drawing no.:
E2-0


FBA Engineering / Plot Date: 2/25/2025 4:13 PM / Plotted by: Don Fleischman / Drawing Location: I:\212\328\E2-0 _Fire Alarm System Information.dwg

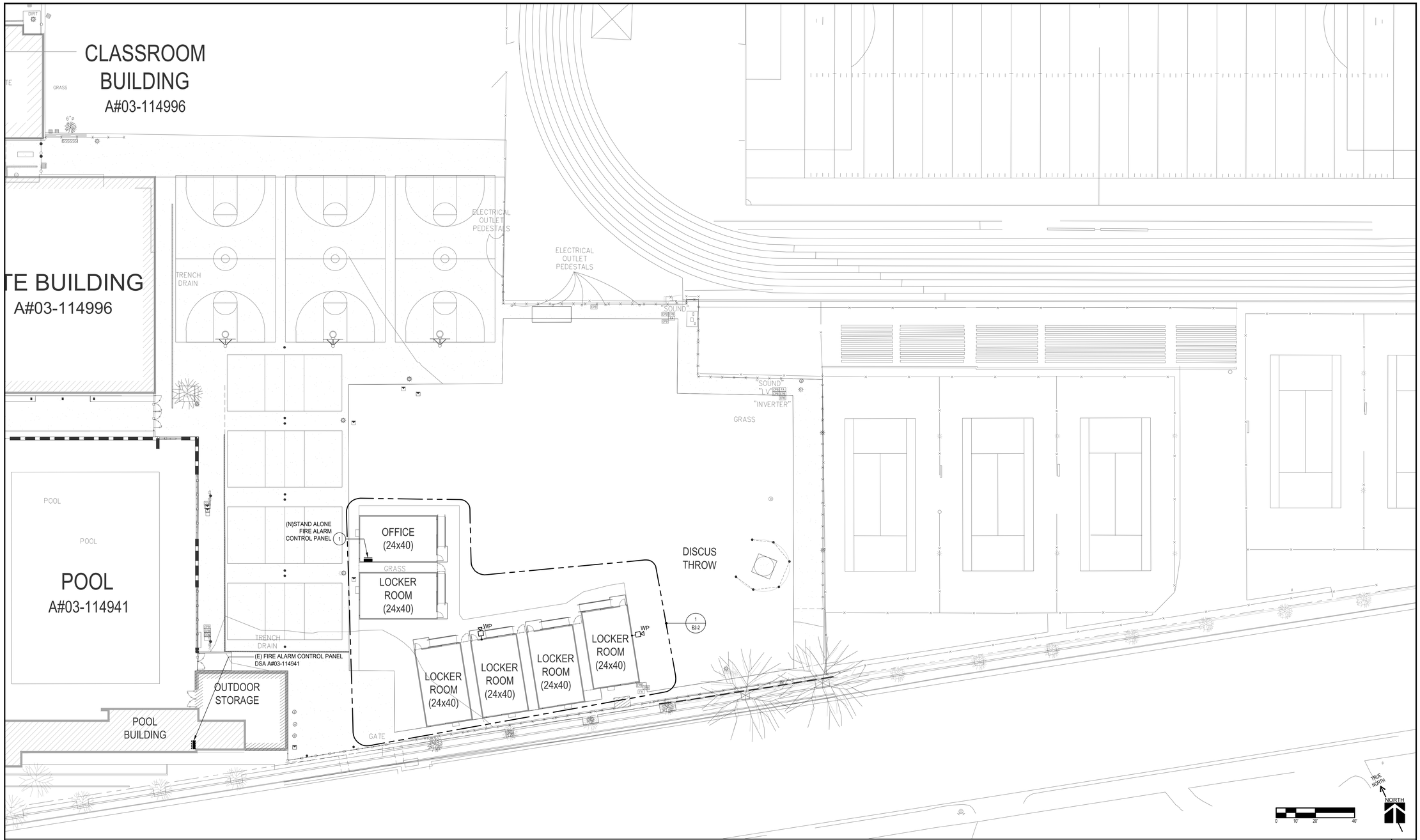


OVERALL SITE FIRE ALARM PLAN 1

SCALE: 1"=20'-0"

## KEY NOTES

1. PROVIDE FIRE ALARM CONTROL PANEL FOR FIRE ALARM SYSTEM.

## LEGEND

- FIRE ALARM MANUAL PULL STATION +48"
- FIRE ALARM EXTERIOR HORN +90"
- FIRE ALARM CEILING MOUNTED HORNSTROBE
- FIRE ALARM CONTROL PANEL

| | |
|---|---|
| (N) | NEW |
| PB | PULLBOX - 17" x 30" x 36" |
| WP | WEATHERPROOF |

A# 03 - 124890
DIVISION OF THE STATE ARCHITECT
355 S. GRAND AVE, SUITE 2100
LOS ANGELES, CA 90071
ph: 213.897.3995 fx: 213.897.3159/0726

agency

tBP
architecture
planning
interiors

tBP/Architecture
4611 Teller Avenue
Newport Beach, CA 92660
ph: 949.673.0300

architect

**FBA** Engineering
Consulting Electrical Engineers
150 Paularino Avenue Suite A120
Costa Mesa, CA 92626
949.852.9995 ♥ 949.852.1657 (fax)
fbaengr.com
FBA Job Number: 212.328

REGISTERED PROFESSIONAL ENGINEER
STEPHEN R. ZAJTCHUK
No. E 10372
Exp. 09-30-25
ELECTRICAL
STATE OF CALIFORNIA
2/25/2025

consultant

# ARCADIA HIGH SCHOOL LOCKER ROOM INTERIM HOUSING

ARCADIA UNIFIED SCHOOL DISTRICT
180 CAMPUS DRIVE
ARCADIA, CALIFORNIA 91006

owner

tBP project number : 21196.00

file name:

drawn by: checked by:

date: 11/18/2024

| Rev: | date: | description: |
|---|---|---|
| | | |
| | | |
| | | |
| | | |
| | | |
| | | |

THIS DRAWING AND THE DESIGNS, DEPICTIONS, IDEAS AND OTHER INFORMATION CONTAINED HEREIN CONSTITUTE UNPUBLISHED WORK OF tBP/ARCHITECTURE AND SHALL REMAIN THE PROPERTY OF tBP/ARCHITECTURE IN PERPETUITY. NO PART THEREOF SHALL BE REPRODUCED, DISCLOSED, DISTRIBUTED, SOLD, PUBLISHED OR OTHERWISE USED IN ANY WAY WITHOUT THE ADVANCED EXPRESS WRITTEN CONSENT OF tBP/ARCHITECTURE.

drawing title:
OVERALL SITE FIRE ALARM PLAN

drawing no.:
E2-1

FBA Engineering / Plot Date: 2/25/2025 4:13 PM / Plotted by: Don Fleischman / Drawing Location: I:\212\328\E2-1_Overall Site Fire Alarm Plan.dwg

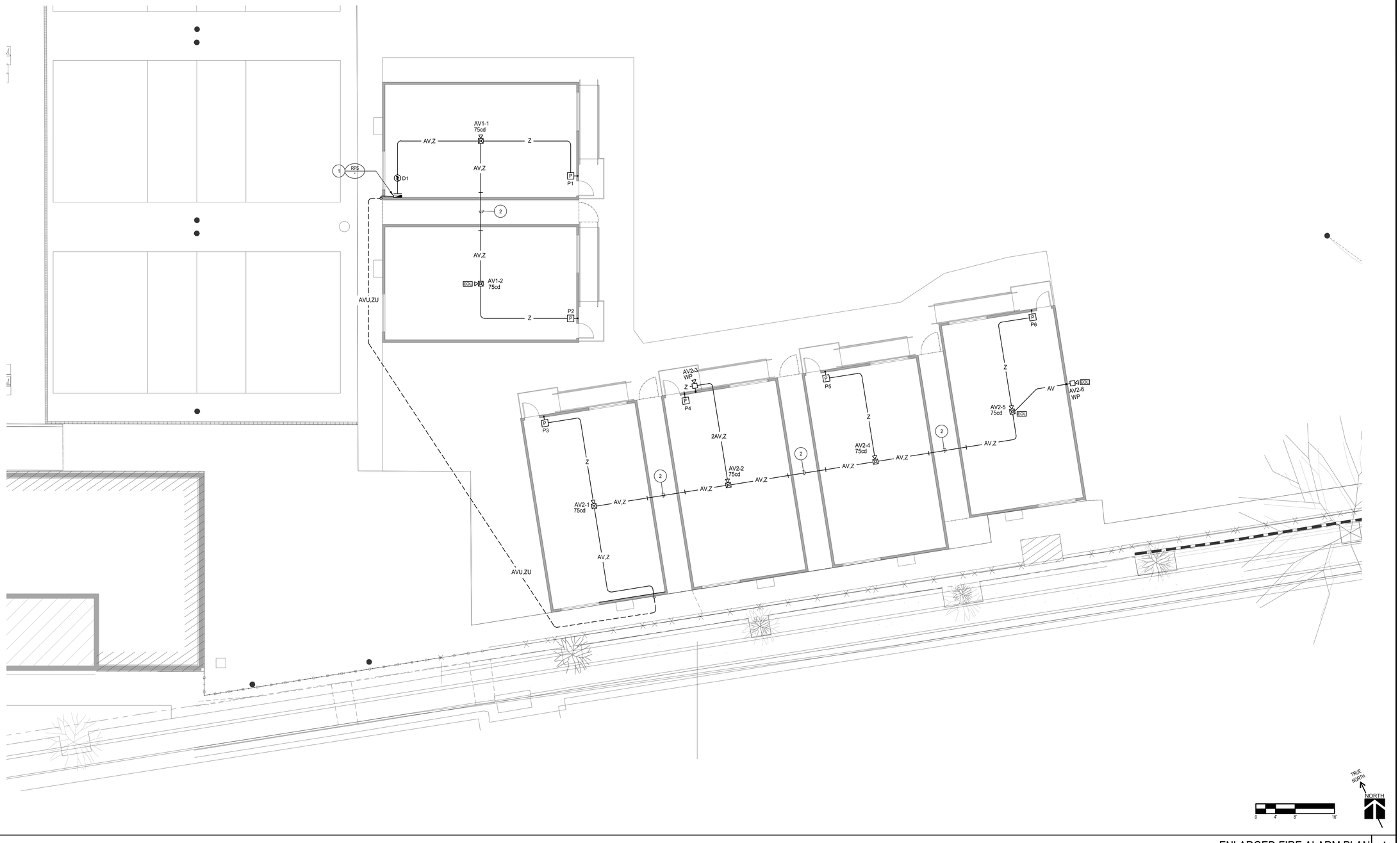


ENLARGED FIRE ALARM PLAN 1

1/8"=1'-0"

## FIRE ALARM RISER DIAGRAM

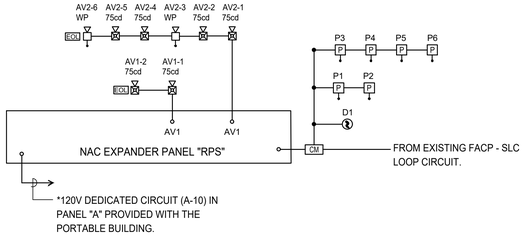


* 120VAC POWER FOR PANELS SHALL HAVE THE FOLLOWING:

1. 120VAC SHALL BE A DEDICATED CIRCUIT
2. MECHANICALLY PROTECTED WITH LOCK-OUT TYPE DEVICE.
3. IDENTIFIED AS "FIRE ALARM CIRCUIT" MARKED IN RED.
4. ACCESSIBLE ONLY TO AUTHORIZED PERSONNEL.
5. LOCATION OF CIRCUIT BREAKER PERMANENTLY IDENTIFIED AT FIRE ALARM CONTROL UNIT.

## KEY NOTES

1. PROVIDE AND INSTALL NEW FIRE ALARM NAC EXPANDER PANEL. CONNECT TO EXISTING CAMPUS FIRE ALARM SYSTEM LOCATED IN POOL HOUSE DATA ROOM. EXISTING FIRE ALARM PANEL PER DSA A#03-114941. ROUTE CABLE ON TEMPORARY POWER POLES, REFER TO DETAILS E THROUGH K ON E3-3 FOR ADDITIONAL INFORMATION.

## LEGEND

### FIRE ALARM RACEWAY SCHEDULE

| IN CONDUIT WIRETAG | CONDUCTORS | SIZE |
|---|---|---|
| Z | 2#16TP (SLC LOOP) | 3/4"C. |
| AV | 2#12THHN (HORNSTROBE) | 3/4"C. |

NOTE: ALL UNDERGROUND CABLING / WIRE SHALL BE TYPE THWN OR APPROVED FOR WET LOCATION

- FIRE ALARM MANUAL PULL STATION +48"
- FIRE ALARM EXTERIOR HORN +90"
- FIRE ALARM CEILING MOUNTED HORNSTROBE
- FIRE ALARM NAC EXPANDER PANEL.

(N) NEW

PB PULLBOX - 17" x 30" x 36"

WP WEATHERPROOF


A# 03 - 124890
DIVISION OF THE STATE ARCHITECT
355 S. GRAND AVE, SUITE 2100
LOS ANGELES, CA 90071
ph: 213.897.3995 fx: 213.897.3159/0726
agency

tBP
architecture
planning
interiors

tBP/Architecture
4611 Teller Avenue
Newport Beach, CA 92660
ph: 949.673.0300
architect

FBA Engineering
Consulting Electrical Engineers
150 Paularino Avenue Suite A120
Costa Mesa, CA 92626
949.852.9995 ♥ 949.852.1657 (fax)
fbaengr.com
FBA Job Number: 212.328
REGISTERED PROFESSIONAL ENGINEER
STEPHEN R. ZAJTCHUK
No. E 10372
Exp. 09-30-25
ELECTRICAL
STATE OF CALIFORNIA
2/25/2025
consultant


# ARCADIA HIGH SCHOOL LOCKER ROOM INTERIM HOUSING

ARCADIA UNIFIED SCHOOL DISTRICT
180 CAMPUS DRIVE
ARCADIA, CALIFORNIA 91006

owner

tBP project number : 21196.00

file name:

drawn by: checked by:

date: 11/18/2024

| Rev: | date: | description: |
|---|---|---|
| | | |


THIS DRAWING AND THE DESIGNS, DEPICTIONS, IDEAS AND OTHER INFORMATION CONTAINED HEREIN CONSTITUTE UNPUBLISHED WORK OF tBP/ARCHITECTURE AND SHALL REMAIN THE PROPERTY OF tBP/ARCHITECTURE IN PERPETUITY. NO PART THEREOF SHALL BE REPRODUCED, DISCLOSED, DISTRIBUTED, SOLD, PUBLISHED OR OTHERWISE USED IN ANY WAY WITHOUT THE ADVANCED EXPRESS WRITTEN CONSENT OF tBP/ARCHITECTURE.


drawing title:

ENLARGED FIRE ALARM PLAN

drawing no.:

E2-2


FBA Engineering / Plot Date: 2/25/2025 4:13 PM / Plotted by: Don Fleischman / Drawing Location: I:\212\328\E2-2_Enlarged Fire Alarm Plan.dwg

## SCOPE OF WORK

1. THE MANUFACTURER (OR PORTABLE/MODULAR PROVIDER) SHALL PROVIDE ALL LABOR AND MATERIALS PER PLAN UNLESS STATED OTHERWISE IN WRITTEN EXECUTED CONTRACT BETWEEN THE DISTRICT (OR OWNER). REFER TO THE GENERAL SPECIFICATIONS ON SHEET A0.1
2. CHANGES TO PLAN OR SCOPE OF WORK - NO ADDITIONAL WORK OR RE-WORK SHALL BE COMMENCED BY THE MANUFACTURER UNLESS STATED OTHERWISE IN WRITTEN EXECUTED CONTRACT BETWEEN THE DISTRICT (OR OWNER). HERE-SAY, TEXT MESSAGES, EMAILS AND SOCIAL MEDIA ARE NOT CONSIDERED WORK AUTHORIZATION. REFER TO THE GENERAL SPECIFICATION SHEET ON SHEET A0.1 FOR ADDITIONAL INFORMATION
3. THE DESIGN AND SCOPE OF WORK OF THE INCOMING SITE INSTRASTRUCTURE TO THE PORTABLE/MODULAR BUILDING SUCH AS POWER, WASTE, WATER, COMMUNICATION, AND FIRE ALARM ARE BY DISTRICT (OWNER). REFER TO THE GENERAL SPECIFICATION SHEET ON SHEET A0.1 FOR ADDITIONAL INFORMATION REGARDING WORK NOT INCLUDED

## OPERATIONS & MAINTENANCE

BUILDING MANUFACTURER SHALL LEAVE FOR THE BUILDING OWNER AT OCCUPANCY OPERATING INFORMATION FOR ALL APPLICABLE MECHANICAL AND ELECTRICAL FEATURES, MATERIALS, COMPONENTS AND DEVICES INSTALLED IN THE BUILDING RELATED TO EFFICIENT ENERGY USE. IN ADDITION, THE BUILDING MANUFACTURER SHALL LEAVE MAINTENANCE INFORMATION FOR ALL FEATURES, MATERIALS, COMPONENTS, AND MANUFACTURED DEVICES THAT REQUIRE ROUTINE MAINTENANCE FOR EFFICIENT OPERATION OF MECHANICAL EQUIPMENT AND LIGHTING SYSTEM

## NOTES

A DSA CERTIFIED PROJECT INSPECTOR EMPLOYED BY THE DISTRICT (OWNER), AND APPROVED BY THE THE DIVISION OF THE STATE ARCHITECT SHALL PROVIDE CONTINUOUS INSPECTION OF THE WORK. THE DUTIES OF THE INSPECTOR ARE DEFINED IN SECTION 4-333 AND 4-342, PART 1, TITLE 24, CCR. CLASS R.B.I.P. FOR IN-PLANT INSPECTIONS.

SITE SPECIFIC:
COMPLY WITH CFC CHAPTERS 5 & 7, CBC CHAPTERS 3, 5, 7,11B & 14

NOTE: "THIS PC IS NOT APPROVED FOR CHAPTER 7A WILDLAND URBAN AREAS". THIS REVIEW IS PART OF THE SITE SPECIFIC PROJECT. THE APPROVAL OF THE PC DOES NOT INCLUDE THE SITE.

## CAL GREEN NOTES

THIS PC WILL NOT BE PLACED IN ANY OF THE FOLLOWING LOCATIONS:

1. WITHIN THE 65 CNEL NOISE CONTOUR OF AN AIRPORT
2. WITHIN THE 65 CNEL OR LDN NOISE CONTOUR OF A FREEWAY, EXPRESSWAY, RAILROAD OR INDUSTRIAL SOURCE GUIDE WAY
3. WHERE EXPOSED TO NOISE LEVEL OF 65 DB LEQ-1-HR DURING ANY HOUR OF OPERATIONS

## BUILDING CODES AND STANDARDS

2022 CALIFORNIA ADMINISTRATIVE CODE (CAC), PART 1, TITLE 24, CCR
2022 CALIFORNIA BUILDING CODE (CBC) VOLUMES 1 & 2, PART 2, TITLE 24, CCR
2022 CALIFORNIA ELECTRICAL CODE (CEC), PART 3, TITLE 24, CCR
2022 CALIFORNIA MECHANICAL CODE (CMC), PART 4, TITLE 24, CCR
2022 CALIFORNIA PLUMBING CODE (CPC), PART 5, TITLE 24, CCR)
2022 CALIFORNIA ENERGY CODE (CEC), PART 6, TITLE 24, CCR
2022 CALIFORNIA FIRE CODE (CFC), PART 9, TITLE 24, CCR
2022 CALIFORNIA EXISTING BUILDING STANDARDS CODE (CEBC), PART 10, TITLE 24
2022 CALIFORNIA GREEN BUILDING STANDARD CODE (CALGREEN), PART 11, TITLE 24 CCR
2022 CALIFORNIA REFERENCED STANDARDS CODE, PART 12, TITLE 24, CCR
TITLE 19 CCR, PUBLIC SAFETY, STATE FIRE MARSHALL REGULATIONS

## APPLICABLE STANDARDS

FOR A LIST OF APPLICABLE STANDARDS, INCLUDING CALIFORNIA AMENDMENTS TO THE NFPA STANDARDS, REFER TO 2022 CBC CHAPTER 35 AND CFC CHAPTER 80.

## FIRE LIFE SAFETY

ALLOWABLE USES: THIS PC (OR BLDG) IS NOT APPROVED FOR 'A' OCCUPANCY

AUTOMATIC FIRE SPRINKLER SYSTEM: [X] NOT REQUIRED / REQUIRED [ ]

(WHEN APPLICABLE) AUTOMATIC FIRE SPRINKLER SYSTEMS ARE PERMITTED TO BE HYDRAULICALLY CALCULATED, PER NFPA 13, TO MEET THE WATER SUPPLY AVAILABLE AT EACH SITE. PLANS FOR SUCH SYSTEMS MAY BE SUBMITTED AS A PLAN REVIEW SUBMITTAL, AND MAY NOT BE REVIEWED UTILIZING THE "OVER THE COUNTER" PROCESS. A COMPLETE AUTOMATIC FIRE SPRINKLER SYSTEM SUBMITTAL PACKAGE MUST BE PROVIDED AT THE TIME OF THE PLAN REVIEW SUBMITTAL.

THE ARCHITECT OF RECORD (DESIGNER) OR THE DIVISION OF THE STATE ARCHITECT WILL DETERMINE THE USE OF A FIRE SUPPRESSION SYSTEM UNLESS REQUIRED OTHERWISE BY THE TYPE OF CONSTRUCTION LISTED ON THE BUILDING DATA.

~~ALL GROUP 'B' OCCUPANCY ARE NOT REQUIRED TO BE FIRE SPRINKLED UNO REQUIRED BY SITE ANALYSIS~~ ALL GROUP 'E' OCCUPANCY BUILDING GREATER THAN 12,000 SF SHALL BE FIRE SPRINKLED PER CBC SECTION 903.2.3(1)

EXTERIOR PROJECTIONS ARE TO BE FIRE PROTECTED UNLESS PROJECTIONS COMPLY WITH CBC SECTION 705.2

MIN SETBACK FROM ASSUMED LOT LINE = 10'-0". LESS THAN 10'-0" SEE CBC TABLE 705.5

EXTERIOR WALL OPENINGS TO COMPLY WITH TABLE 705.8

## CONCRETE FOUNDATION

THE CONCRETE BELOW GRADE FOUNDATION (AMM) OPTION IN THIS PC USES A DSA-APPROVED ALTERNATE MEANS OF COMPLIANCE FOR FOUNDATION DURABILITY REQUIREMENTS OF CBC SECTIONS 1402.2 AND 1403.2 FOR PROVIDING A WEATHER-RESISTANT EXTERIOR WALL ENVELOPE AND CONTINUOUS WATER-RESISTANT BARRIER ON WALLS DOWN TO THE FOUNDATION, AND CBC SECTION 2304.12.1.2 FOR PROTECTION AGAINST DECAY AND TERMITES.

(NOT PART OF THIS APPLICATION)

## ENERGY

1. THIS PC IS APPROVED FOR THE 2022 CALIFORNIA ENERGY CODE IN ALL CALIFORNIA CLIMATE ZONES USING EXTERIOR WOOD STUD FRAMING FOR WALL MOUNT SINGLE ZONE PACKAGED UNIT AND ROOFTOP PACKAGED UNITS ONLY
2. THIS PC IS NOT APPROVED FOR THE 2022 CALIFORNIA ENERGY CODE IN CLIMATE 1-16 USING METAL STUD FRAMING
3. ACCEPTANCE TEST SHALL BE COMPLETED ON NEWLY INSTALLED OR REPLACEMENT OF LIGHTING CONTROLS, MECHANICAL SYSTEMS, FENESTRATION, AND PROCESS EQUIPMENT BEFORE PROJECT COMPLETION PER THE CALIFORNIA ENERGY CODE SECTION 10-103. ACCEPTANCE TEST MUST BE PERFORMED BY A CERTIFIED ACCEPTANCE TEST TECHNICIAN (ATT). THE ACCEPTANCE TESTING PROCEDURES MUST BE REPEATED, AND DEFICIENCIES CORRECTED UNTIL THE INSTALLATION OF THE SPECIFIED SYSTEMS CONFORMS AND PASS THE REQUIRED ACCEPTANCE CRITERIA. COMPLETED NRCA FORMS SHALL BE SUBMITTED TO THE PROJECT INSPECTOR AND DISTRICT

SERIAL NUMBERS:

24-131-A/B OPTION 'B' (LEFT HANDED)
24-132-A/B OPTION 'B' (LEFT HANDED)
24-133-A/B OPTION 'B' (LEFT HANDED)
24-134-A/B OPTION 'B' (LEFT HANDED)
24-135-A/B OPTION 'B' (LEFT HANDED)
24-136-A/B OPTION 'A' (LEFT HANDED)
24-137-A/B OPTION 'A' (LEFT HANDED)
24-138-A/B OPTION 'A' (LEFT HANDED)
24-139-A/B OPTION 'A' (LEFT HANDED)
24-140-A/B OPTION 'A' (LEFT HANDED)


KSC COMPANY
15345 FAIRFIELD RD, SUITE 160, CHINO HILLS, CA 91709
OFFICE: (909) 740-3120, FAX: (909) 726-9470
WEBSITE: WWW.SKCCOMPANY.COM
MANUFACTURER #MF1279666 DEALER # DL1279666
GC LIC # 992118 SBE CERTIFIED


FOUNDATION (NOT PART OF THIS STOCKPILE) RELOCATING THIS STOCKPILE TO A SPECIFIC SITE WILL REQUIRE FOUNDATION PLANS AND DETAILS TO BE REVIEWED AND APPROVED UNDER A SEPARATE DSA APPLICATION. FOUNDATION SHALL BE PER CURRENT CODE EDITION EITHER PC OR SITE SPECIFIC. PCs #04-122454 OR #04-122167 MAYBE UTILIZED

# 2022 CBC
# MANUFACTURED RELOCATABLE & MODULAR CLASSROOM BUILDINGS
# RISK CATEGORY II
# PC 04-122454
# 24'X40' THRU 120'X40'

## DRAWING SYMBOLS & LEGEND

* 2"x4" WOOD STUD
* 2"x6" WOOD STUD
* 2"x8" WOOD STUD
1 HR RATED (DARK LINE THROUGH SYMBOL)
STC 40 REQUIRED WHEN USED FOR INTERIOR WALLS SEPARATING TENANTS OR PUBLIC SPACES. SEE INTERIOR WALL SCHEDULE ON SHEET A0.2
INDICATES DOOR TYPE
INDICATES WINDOW TYPE
KEY NOTE SYMBOL
INDICATES INTERIOR ELEVATION ORIENTATION
INDICATES DETAIL #
INDICATES SHEET #
INDICATES DETAIL #
INDICATES SHEET #
INDICATES EXTERIOR ELEVATION #
INDICATES SHEET #
5'-0" CLEAR FLOOR SPACE FOR WHEELCHAIR ACCESSIBLE MANEUVERING WITH 12" MIN. ENCROACHMENT
48"x30" CLEAR FLOOR SPACE FOR WHEELCHAIR ACCESS TO FIXTURE
INDICATES ROOM NAME
INDICATES ROOM NUMBER
60"x60" CLEAR FLOOR SPACE FOR WHEELCHAIR ENTRY ACCESS.
WHEELCHAIR ACCESSIBLE CLEAR FLOOR SPACE AT ACCESSIBLE WATER CLOSET
60"x59" AT FLOOR MOUNTED WATER CLOSET
60"x56" AT WALL MOUNTED WATER CLOSET
GRID LINE NUMBER OR LETTER
INDICATES CUT SECTION DETAIL#
INDICATES SHEET #

## SHEET INDEX


| SHEET NO. | ARCHITECTURAL |
|---|---|
| A0.0 | TITLE SHEET |
| A0.1 | SPECIFICATIONS AND NOTES |
| A0.2 | CONSTRUCTION MATERIALS AND SPECIFICATIONS |
| A0.3 | FINISH SCHEDULE |
| A0.4 | SIGNAGE SPECIFICATIONS AND DETAILS |
| ~~A0.5~~ | ~~EXPANDABLE FLOOR PLANS 60'x40'-120'x40'~~ |
| A0.6 | CAL GREEN REQUIREMENTS |
| ~~A0.7~~ | ~~STC CONSTRUCTION DETAILS (INTERIOR WALLS)~~ |
| A0.8a | SAMPLE DSA 103 FORM WOOD FOUNDATION OR BUILDING STOCKPILE PROJECT |
| ~~A0.8b~~ | ~~SAMPLE DSA 103 FORM CONCRETE FOUNDATION WITH NO GEO-TECH REPORT~~ |
| ~~A0.8c~~ | ~~SAMPLE DSA 103 FORM CONCRETE FOUNDATION WITH GEO-TECH REPORT~~ |
| A0.9 | CAL GREEN MANDATORY MEASURES |
| A0.10 | CONSTRUCTION WASTE MANAGEMENT FORMS |
| A1.1 | FLOOR PLAN 24'x40' |
| ~~A1.2~~ | ~~FLOOR PLAN 36'x40'~~ |
| ~~A1.3~~ | ~~FLOOR PLAN 48'x40'~~ |
| A2.0a | REFLECTED CEILING DETAILS |
| A2.0b | REFLECTED CEILING DSA NOTES |
| A2.1 | REFLECTED CEILING PLAN 24'x40' |
| ~~A2.2~~ | ~~REFLECTED CEILING PLAN 36'x40'~~ |
| ~~A2.3~~ | ~~REFLECTED CEILING PLAN 48'x40'~~ |
| A3.5 | ROOF DETAILS-TPO |
| A3.6 | ROOF PLAN MONO & DUAL SLOPE-TPO |
| ~~A3.7SR~~ | ~~SOLAR READY ROOF PLANS 24'x40', 36'x40' & 48'x40'~~ |
| ~~A3.8SR~~ | ~~SOLAR READY ROOF PLANS 60'x40', 72'x40' & 84'x40'~~ |
| ~~A3.9SR~~ | ~~SOLAR READY ROOF PLANS 96'x40', 108'x40' & 120'x40'~~ |
| A4.1 | INTERIOR ELEVATIONS 24'x40' |
| ~~A4.2~~ | ~~INTERIOR ELEVATIONS 36'x40'~~ |
| ~~A4.3~~ | ~~INTERIOR ELEVATIONS 48'x40'~~ |
| A5.1-A | EXTERIOR ELEVATIONS 24'x40'-WOOD SIDING OPTION 'A' (RIGHT HAND) |
| A5.1-B | EXTERIOR ELEVATIONS 24'x40'-WOOD SIDING OPTION 'B' (LEFT HAND) |
| ~~A5.2~~ | ~~EXTERIOR ELEVATIONS 36'x40'-WOOD SIDING~~ |
| ~~A5.3~~ | ~~EXTERIOR ELEVATIONS 48'x40'-WOOD SIDING~~ |
| ~~A5.4-A~~ | ~~EXTERIOR ELEVATIONS 24'x40'-STUCCO OPTION OPTION 'A' (RIGHT HAND)~~ |
| ~~A5.4-B~~ | ~~EXTERIOR ELEVATIONS 24'x40'-STUCCO OPTION OPTION 'B' (LEFT HAND)~~ |
| ~~A5.5~~ | ~~EXTERIOR ELEVATIONS 36'x40'-STUCCO OPTION~~ |
| ~~A5.6~~ | ~~EXTERIOR ELEVATIONS 48'x40' STUCCO OPTION~~ |
| A8.0 | ARCHITECTURAL DETAILS WOOD STUD OPTION |
| A8.1 | ARCHITECTURAL DETAILS |
| A8.2 | SHEET METAL AND FLASHING DETAILS |
| ~~A9.0~~ | ~~FIRE RATED ASSEMBLIES~~ |
| ~~A9.1~~ | ~~FIRE RATED DETAILS~~ |
| ~~A10.0~~ | ~~RESTROOM ACCESSORIES SCHEDULE & DETAILS~~ |
| ~~A10.1~~ | ~~RESTROOM ACCESSIBILITY DETAILS~~ |
| ~~A11.0~~ | ~~SOLATUBE OPTION AT TPO ROOF~~ |
| ~~A12.0~~ | ~~24'X40' OFFICE, JANITOR, AND DRINKING FOUNTAIN OPTIONAL PLAN~~ |
| ~~A12.0A~~ | ~~24'X40' OPTIONAL RESTROOM & ACCESSORY PLAN - ADULT AGES 13+~~ |
| ~~A12.0B~~ | ~~24'X40' OPTIONAL RESTROOM & ACCESSORY PLAN - COMBINED AGES 5-12~~ |
| ~~A12.0C~~ | ~~24'X40' OPTIONAL RESTROOM & ACCESSORY PLAN - COMBINED AGES 3-8~~ |
| ~~A12.1~~ | ~~36'X40' OFFICE, JANITOR, AND DRINKING FOUNTAIN OPTIONAL PLAN~~ |
| ~~A12.1A~~ | ~~36'X40' OPTIONAL RESTROOM & ACCESSORY PLAN - ADULT AGES 13+~~ |
| ~~A12.1B~~ | ~~36'X40' OPTIONAL RESTROOM & ACCESSORY PLAN - COMBINED AGES 5-12~~ |
| ~~A12.1C~~ | ~~36'X40' OPTIONAL RESTROOM & ACCESSORY PLAN - COMBINED AGES 3-8~~ |
| ~~A12.2~~ | ~~48'X40' OFFICE, JANITOR, AND DRINKING FOUNTAIN OPTIONAL PLAN~~ |
| ~~A12.2A~~ | ~~48'X40' OPTIONAL RESTROOM & ACCESSORY PLAN - ADULT AGES 13+~~ |
| ~~A12.2B~~ | ~~48'X40' OPTIONAL RESTROOM & ACCESSORY PLAN - COMBINED AGES 5-12~~ |
| ~~A12.2C~~ | ~~48'X40' OPTIONAL RESTROOM & ACCESSORY PLAN - COMBINED AGES 3-8~~ |
| A13.0 | ARCHITECTURAL BUILDING SECTIONS - MONO SLOPE |
| ~~A14.0~~ | ~~ARCHITECTURAL BUILDING SECTIONS - DUAL SLOPE~~ |
| ~~A20.0~~ | ~~DETERIORATION PROTECTION FOR BELOW GRADE CONDITION (WOOD SIDING)~~ |
| ~~A20.1~~ | ~~DETERIORATION PROTECTION FOR BELOW GRADE CONDITION (STUCCO SIDING)~~ |
| | FOUNDATION |
| F1.1 | WOOD PAD FOUNDATION PLAN-PLYWOOD FLOOR-24X40 |
| ~~F1.2~~ | ~~WOOD PAD FOUNDATION PLAN-PLYWOOD FLOOR-36X40~~ |
| ~~F1.3~~ | ~~WOOD PAD FOUNDATION PLAN-PLYWOOD FLOOR-48X40~~ |
| F1.8 | WOOD PAD FOUNDATION DETAILS |
| ~~F2.0~~ | ~~ABOVE GRADE CONCRETE FOUNDATION DETAILS~~ |
| ~~F2.1~~ | ~~ABOVE GRADE CONCRETE FOUNDATION PLAN~~ |
| ~~F3.0~~ | ~~FLUSH TO GRADE CONCRETE FOUNDATION DETAILS~~ |
| ~~F3.1~~ | ~~FLUSH TO GRADE CONCRETE FOUNDATION PLAN~~ |
| ~~F4.0~~ | ~~GENERAL CONCRETE DETAILS~~ |

| SHEET NO. | STRUCTURAL |
|---|---|
| S0.0a | STRUCTURAL NOTES AND SPECIFICATIONS |
| S0.0b | STRUCTURAL NOTES AND SPECIFICATIONS |
| S0.1 | STRUCTURAL BUILDING SECTIONS - PLYWOOD FLOOR |
| ~~S0.2~~ | ~~STRUCTURAL BUILDING SECTIONS - CONCRETE FLOOR~~ |
| S0.3 | TYPICAL STRUCTURAL DETAILS |
| S1.0 | FLOOR FRAMING DETAILS - PLYWOOD & CONCRETE |
| S1.1 | FLOOR FRAMING PLAN - PLYWOOD |
| ~~S1.2~~ | ~~FLOOR FRAMING PLAN - CONCRETE~~ |
| S2.0 | ROOF FRAMING DETAILS |
| S2.1 | ROOF TRUSS AND DETAILS |
| S2.2 | ROOF FRAMING PLAN - PLYWOOD SHEATHING DIAPHRAGM |
| S3.0 | WALL FRAMING DETAILS - WOOD STUD |
| S3.2 | WALL FRAMING ELEVATIONS |
| S4.0 | ALLOWABLE BEAM AND HEADER PENETRATION |
| | MECHANICAL |
| M0.0 | MECHANICAL SCHEDULES AND NOTES |
| M0.1 | MECHANICAL DETAILS |
| M1.1 | MECHANICAL PLAN WALL MOUNT 24'x40' |
| ~~M1.2~~ | ~~MECHANICAL PLAN WALL MOUNT 36'x40'~~ |
| ~~M1.3~~ | ~~MECHANICAL PLAN WALL MOUNT 48'x40'~~ |
| ~~M2.1~~ | ~~MECHANICAL PLAN ROOF MOUNT 24'x40'~~ |
| ~~M2.2~~ | ~~MECHANICAL ROOF PLAN 24'x40'~~ |
| ~~M2.3~~ | ~~MECHANICAL PLAN ROOF MOUNT 36'x40'~~ |
| ~~M2.4~~ | ~~MECHANICAL ROOF PLAN 36'x40'~~ |
| ~~M2.5~~ | ~~MECHANICAL PLAN ROOF MOUNT 48'x40'~~ |
| ~~M2.6~~ | ~~MECHANICAL ROOF PLAN 48'x40'~~ |
| M3.0 | PC TITLE 24 REPORT WORST CASE SCENARIO (PERFORMANCE RUN) |
| M3.1 | PC TITLE 24 REPORT WORST CASE SCENARIO (PERFORMANCE RUN) |
| M3.2 | PC TITLE 24 REPORT WORST CASE SCENARIO (PERFORMANCE RUN) |
| M3.3 | PC TITLE 24 REPORT WORST CASE SCENARIO (PERFORMANCE RUN) |
| M3.4 | PC TITLE 24 REPORT PERFORMANCE RUN TABLES |
| M5.0 | PC HVAC VARIATION CHART |
| | ELECTRICAL |
| E0.0 | ELECTRICAL DETAILS |
| E1.0 | ELECTRICAL PLAN 24'x40' (WALL MOUNTED HVAC) |
| ~~E1.0SR~~ | ~~ELECTRICAL PLAN 24'x40' (WALL MOUNTED HVAC) SOLAR READY~~ |
| ~~E1.1~~ | ~~ELECTRICAL PLAN 24'x40' (ROOF MOUNTED HVAC)~~ |
| ~~E1.1SR~~ | ~~ELECTRICAL PLAN 24'x40' (ROOF MOUNTED HVAC) SOLAR READY~~ |
| ~~E2.0~~ | ~~ELECTRICAL PLAN 36'x40' (WALL MOUNTED HVAC)~~ |
| ~~E2.0SR~~ | ~~ELECTRICAL PLAN 36'x40' (WALL MOUNTED HVAC) SOLAR READY~~ |
| ~~E2.1~~ | ~~ELECTRICAL PLAN 36'x40' (ROOF MOUNTED HVAC)~~ |
| ~~E2.1SR~~ | ~~ELECTRICAL PLAN 36'x40' (ROOF MOUNTED HVAC) SOLAR READY~~ |
| ~~E3.0~~ | ~~ELECTRICAL PLAN 48'x40' (WALL MOUNTED HVAC)~~ |
| ~~E3.0SR~~ | ~~ELECTRICAL PLAN 48'x40' (WALL MOUNTED HVAC) SOLAR READY~~ |
| ~~E3.1~~ | ~~ELECTRICAL PLAN 48'x40' (ROOF MOUNTED HVAC)~~ |
| ~~E3.1SR~~ | ~~ELECTRICAL PLAN 48'x40' (ROOF MOUNTED HVAC) SOLAR READY~~ |
| E4.0DL | SKYLIT & SIDELIT DAYLIT ZONE FLOOR PLANS 24'-48'x40' |
| ~~E4.1DL~~ | ~~SKYLIT & SIDELIT DAYLIT ZONE FLOOR PLANS 60'-120'x40'~~ |
| ~~E5.0~~ | ~~SOLATUBE WIRING AND DAYLIGHT HARVESTING~~ |
| E6.0 | ELECTRICAL LIGHTING CONTROL & SEQUENCE OF OPERATION |
| E7.0 | PC TITLE 24 REPORT WORST CASE SCENARIO CEC FORMS |
| E7.1 | PC TITLE 24 REPORT WORST CASE SCENARIO CEC FORMS |
| E7.2 | PC TITLE 24 REPORT WORST CASE SCENARIO CEC FORMS |
| ~~E8.0~~ | ~~PC PHOTOVOLTAIC AND BATTERY STORAGE CAPACITY TABLES~~ |
| | PLUMBING |
| ~~P0.0~~ | ~~PLUMBING SCHEDULE AND DETAILS~~ |
| ~~P1.0~~ | ~~PLUMBING PLAN 24'X40' JANITOR, AND DRINKING FOUNTAIN OPTION~~ |
| ~~P1.0A~~ | ~~PLUMBING PLAN 24'X40' "A", "A-1", & "A-1.1" ADULT AGES 13+~~ |
| ~~P1.0B~~ | ~~PLUMBING PLAN 24'X40' "B", & "B-1" COMBINED AGES 5-12~~ |
| ~~P1.0C~~ | ~~PLUMBING PLAN 24'X40' "C" & "C-1" COMBINED AGES 3-8~~ |
| ~~P2.0~~ | ~~PLUMBING PLAN 36'X40' JANITOR, AND DRINKING FOUNTAIN OPTION~~ |
| ~~P2.0A~~ | ~~PLUMBING PLAN 36'X40' "A", "A-1", & "A-1.1" ADULT AGES 13+~~ |
| ~~P2.0B~~ | ~~PLUMBING PLAN 36'X40' "B" & "B-1" COMBINED AGES 5-12~~ |
| ~~P2.0C~~ | ~~PLUMBING PLAN 36'X40' "C" & "C-1" COMBINED AGES 3-8~~ |
| ~~P3.0~~ | ~~PLUMBING PLAN 48'X40' JANITOR, AND DRINKING FOUNTAIN OPTION~~ |
| ~~P3.0A~~ | ~~PLUMBING PLAN 48'X40' "A", "A-1", & "A-1.1" ADULT AGES 13+~~ |
| ~~P3.0B~~ | ~~PLUMBING PLAN 48'X40' "B" & "B-1" COMBINED AGES 5-12~~ |
| ~~P3.0C~~ | ~~PLUMBING PLAN 48'X40' "C" & "C-1" COMBINED AGES 3-8~~ |
| ~~P6.0~~ | ~~PC TITLE 24 REPORT WORST CASE SCENARIO PLUMBING FORMS~~ |


RAMP, LANDING AND STAIR (NOT PART OF THIS PC)
TOTAL SHEET COUNT: ~~136~~ 50

## DESIGN PARAMETERS

FLOOR LIVE LOAD: ~~50 PSF,~~ 50+15 PSF, ~~100 PSF & 125 PSF~~

ROOF LIVE LOAD: 20 PSF
GROUND SNOW LOAD MAXIMUM: 31 PSF FULLY EXPOSED, 28 PARTIALLY EXPOSED, 26 PSF SHELTERED

ROOF SNOW LOAD: 20 PSF MAX (ASCE 7-16 SEC 7.4)
Ce=0.9 FULLY EXPOSED, 1.0 PARTIALLY EXPOSED, 1.1 SHELTERED
I=1.0, Ct=1.0
FOR SNOW DRIFT, THE SITE APPLICATION DSA REVIEWER SHALL VERIFY THAT THE STRUCTURE IS TO BE LOCATED AT LEAST 20 FT FROM ANY ADJACENT STRUCTURE UNLESS A DRIFT ANALYS IS PROVIDED (NOT ACCEPTED AT AN OTC REVIEW)

FLOOD HAZARD AREA: NO

WIND DESIGN: (ASCE 7-16)
Kzt=1.0
WIND SPEED=110 MPH, RISK CATEGORY = II, EXPOSURE='C'
INTERNAL PRESSURE COEFFICIENT = ±0.18
COMPONENTS & CLADDING DESIGN BY PC ENGINEER OF RECORD

DESIGN ROOF DEAD LOAD: 15 PSF (BEAMS AND TRUSSES) INCLUDES 3.0 PSF FOR ROOF MOUNTED SOLAR PANELS

DESIGN FLOOR DEAD LOAD:
PLYWOOD FLOOR - 8 PSF (+15 W/ PARTITIONS),
~~CONCRETE DECK - 31 PSF (+15 W/ PARTITIONS)~~

EARTHQUAKE DESIGN DATA:
1. I=1.0, RISK CATEGORY=II
2. $S_S$=2.38 (MAX MAPPED VALUE)
   $S_1$=1.389 (MAX MAPPED VALUE)
3. SITE CLASS=C AND D-DEFAULT
   Fa=1.2 & Fv=1.4
4. $S_{DS}$=1.6, $S_{D1}$=1.574
   $S_{DS}$ (BUILDING = 0.7 X $S_{DS}$) = 1.6, $S_{DS}$ (COMPONENTS) = 2.29
5. SEISMIC DESIGN CATEGORY=E
6. LIGHT MODULAR STEEL MOMENT FRAME PER CBC SECTION 2212A
7. DESIGN BASE SHEAR=16113# (FOR 24' X 40' BUILDING), 22415# (FOR 36' X 40' BUILDING), AND 28716# (FOR 48' X 40' BUILDING)
8. $C_S$=0.381
9. R=3.5
10. EQUIVALENT LATERAL FORCE PROCEDURE
11. NO VERTICAL OR HORIZONTAL IRREGULARITIES
12. GROUND MOTION HAZARD ANALYSIS IS NOT REQUIRED PER ASCE 7-16, 11.4.8
    EXCEPTION #2. VALUE OF Cs HAS BEEN DETERMINED BY EQN. 12.8-2 FOR A VALUE OF T<1.5 Ts
13. RHO = 1.0

GEOHAZARD REPORTS: THE DESIGN ARCHITECT IN GENERAL RESPONSIBLE CHARGE MUST DETERMINE IF A GEOHAZARD REPORT IS REQUIRED PER DSA IR A-4. IF REQUIRED, THE AOR SHALL VERIFY THAT THE GEOHAZARD REPORT IDENTIFIES NO SITE RELATED GEOLOGIC HAZARDS WHICH WOULD PRECLUDE THE USE OF THE PROPOSED PC DESIGN AT THE SITE, INCLUDING BUT NOT LIMITED TO LIQUEFACTION POTENTIAL, LANDSLIDE, FLOODING, EARTHQUAKE FAULT, ETC.

NOTES:
1. SITE CLASS A, B, C, AND D TO BE SUBSTANTIATED BY GEOTECHNICAL REPORT, SITE CLASS D- DEFAULT TO BE USED IN ABSENCE OF GEOTECHNICAL REPORT.
2. UNLESS A SITE SPECIFIC GROUND MOTION HAZARD ANALYSIS IS PERFORMED, THE Sm, VALUE INCREASED BY 50% SHALL BE LESS THAN THE DESIGN CRITERIA STATED HEREIN.

## SEISMIC DESIGN FOR SITE SPECIFIC PROJECTS

SELECT ONE

[X] DESIGN BASED ON SITE CLASS D DEFAULT
NO GEOTECHNICAL INVESTIGATION REQUIRED
Ss = 2.2 Fa = 1.2

[ ] DESIGN BASED ON SITE CLASS DETERMINED PER CHAPTER 20 OF ASCE 7-16
NO GEOTECHNICAL INVESTIGATION REQUIRED
SITE CLASS: [ ] C [ ] D [ ] E (NOT PART OF THIS APPLICATION)
Ss = ________ Fa = ________ PER ASCE 7-16 SUPPL 3 TABLE 11.4-1

[ ] DESIGN BASED ON SITE CLASS GROUND MOTION HAZARD ANALYSIS PER CHAPTER 21 OF ASCE 7-16
SHORT-PERIOD DESIGN SPECTRAL RESPONSE PARAMETER, $S_{DS}$, SHALL BE AS SPECIFIED IN GEOTECHNICAL INVESTIGATION
CGS APPROVAL REQUIRED
NOT ELIGIBLE FOR OTC REVIEW (NOT PART OF THIS APPLICATION)
SITE CLASS: [ ] C [ ] D [ ] E
Ss = ________ Fa = ________

$S_{DS}$ = 2/3 Fa Ss= ________ ≤ 1.904
(NOT PART OF THIS APPLICATION)
Cs = 0.381 USED IN DESIGN
SEISMIC DESIGN CATEGORY: [X] D [ ] E
ASCE 7-16 12.8.1.3 HAS NOT BEEN USED IN CALCULATION OF Sds

## BUILDING DATA

TYPE OF CONSTRUCTION: V-B
OCCUPANCY: E NO. OF STORIES: 1
ALLOWABLE AREA: 9,500 SF
MODULES: 12'x40'

BUILDING AREAS:
[X] 24'x40'=960 SF
~~[ ] 36'x40'=1,440 SF~~
~~[ ] 48'x40'=1,920 SF~~
~~[ ] 60'x40'=2,400 SF~~
~~[ ] 72'x40'=2,880 SF~~
~~[ ] 84'x40'=3,360 SF~~
~~[ ] 96'x40'=3,840 SF~~
~~[ ] 108'X40'=4,320 SF~~ **
~~[ ] 120'X40'=4,800 SF~~ **
** GREATER THAN 4000 SQFT REQ. GEOHARZARD REPORT

## STRUCTURAL DATA

STRUCTURAL DESIGN: ORDINARY MOMENT FRAME WITH CLEAR SPAN TRUSS

FOUNDATION:
[X] WOOD PAD < 2160 SF: 50, 50+15, 100 & 125 PSF (CONDITIONAL)
[ ] ABOVE GRADE CONCRETE: 50, 50+15, 100 & 125 PSF
[ ] FLUSH TO GRADE CONCRETE < 2160 SF: 50, 50+15, 100 & 125 PSF (CONDITIONAL)
[ ] FLUSH TO GRADE CONCRETE > 2160 SF: 50, 50+15, 100 & 125 PSF

SEISMIC SEPARATION: 4 1/2" MIN FROM OTHER EXISTING OR FUTURE BUILDINGS MEASURED FROM ITS FARTHEST PROJECTION

THIS PC (OR BLDG) IS DESIGNED STRUCTURALLY TO SUPPORT THE WEIGHT OF A FIRE SPRINKLER SYSTEM

ALLOWABLE SOIL BEARING: WOOD FOUNDATION: SEE SHEET S0.0a
CONCRETE FOUNDATION: SEE SHEET S0.0a
(NOT PART OF THIS APPLICATION)

## MIN SET BACK FROM SLOPE

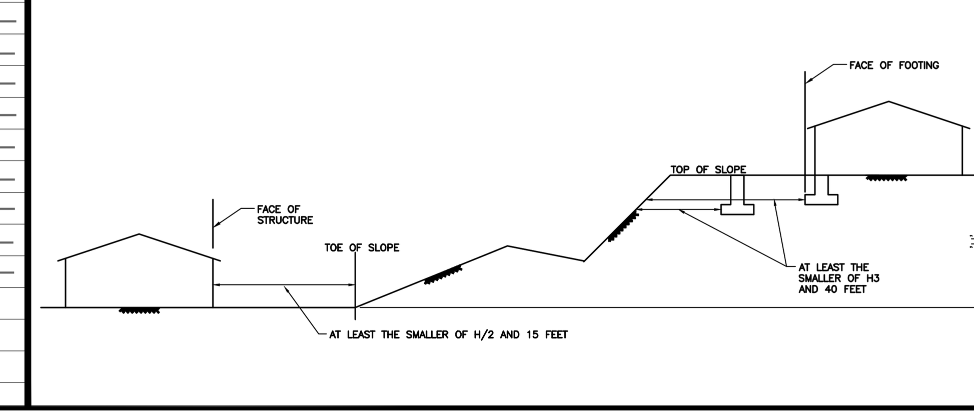


STATE AGENCY APPROVAL

IDENTIFICATION STAMP
DIV. OF THE STATE ARCHITECT
APP. 04-124098 INC:
REVIEWED FOR
SS ☑ FLS ☑ ACS ☑
DATE: 11/14/24


KSC COMPANY
15345 FAIRFIELD RANCH ROAD, SUITE #160, CHINO, CA 91709
OFFICE: (909) 740-3120, FAX: (909) 726-9470
WEBSITE: WWW.SKCCOMPANY.COM
MANUFACTURER #MF1279666 DEALER # DL1279666
GC LIC # 992118 SBE CERTIFIED



ALL DESIGNS INDICATED ON THESE PLANS/DRAWINGS ARE PROPERTY OF SKC, INC AND ARE FOR THE USE BY SKC IN THE SPECIFIED JOB ONLY. THEY SHALL NOT BE USED AND/OR DUPLICATED OR TRANSMITTED IN ANY FORM, FOR ANY PURPOSE WITHOUT THE PRIOR WRITTEN CONSENT OF SKC, INC. ANY UNAUTHORIZED USE OF THESE PLANS SHALL SUBJECT THE OWNER OF SAID PROPERTY TO LIQUIDATED DAMAGES OF $75,000.00. THESE PLANS ARE PROTECTED UNDER THE PROVISIONS OF THE 1976 COPYRIGHT ACT COPYRIGHT SKC, © ALL RIGHTS RESERVED.


DISTRICT/CUSTOMER NAME: NEXTMOD

SCHOOL/SITE NAME: STOCKPILE

SHEET TITLE: TITLE SHEET

PRE-CHECK (PC) DOCUMENT
CODE: 2022 CBC
A SEPARATE PROJECT APPLICATION FOR CONSTRUCTION IS REQUIRED

APPROVED
DIV. OF THE STATE ARCHITECT
APP: 04-122454 PC
REVIEWED FOR
SS ☑ FLS ☑ ACS ☑ CG ☑
DATE: 11/14/2023

PROFESSIONAL OF RECORD ON PC


ORION Structural Engineering, Inc.
11305 RANCHO BERNARDO RD SUITE 121
SAN DIEGO CA. 92127
PHONE (858) 679-1974
REGISTERED PROFESSIONAL ENGINEER RYAN J. OVER No. S 4437 EXP. 12/31/24 STRUCTURAL STATE OF CALIFORNIA

FIRM: Orion Structural Engineering, Inc.
ADDRESS: 11305 Rancho Bernardo Road Ste 121
CITY: San Diego, CA
PHONE: 858-679-1974


PROJECT SPECIFIC PROFESSIONAL OF RECORD

FIRM:
ADDRESS:
CITY:
PHONE:

REVISIONS

| | |
|---|---|
| 1 | - |
| 2 | - |
| 3 | - |
| 4 | - |
| 5 | - |

| | |
|---|---|
| PROJECT NO.: | 00-0000 |
| DRAFTER: | 00 |
| SCALE: | AS NOTED |
| DATE: | 00-00-00 |

SHEET NUMBER
# A0.0

10/31/2023 11:41:28 AM

## GENERAL SPECIFICATIONS

A. THE REQUIREMENTS OF THE GENERAL CONDITIONS APPLY TO THE SEVERAL TRADE SECTIONS WITH THE SAME FORCE AS THOUGH FULLY REPEATED IN EACH SECTION.
B. NAME BRANDS ARE INDICATED TO ESTABLISH A STANDARD OF QUALITY. ITEMS OF EQUAL OR BETTER QUALITY MAY BE SUBSTITUTED FOR THE LISTED BRAND NAMED PRODUCTS.
C. ALL WORK SHALL CONFORM TO 2022 TITLE 24, CALIFORNIA CODE OF REGULATIONS (CCR).
D. CHANGES TO THE APPROVED DRAWINGS AND SPECIFICATIONS SHALL BE MADE BY AN ADDENDUM OR A CONSTRUCTION CHANGE DOCUMENT (CCD) APPROVED BY THE DIVISIONS OF THE STATE ARCHITECT, AS REQUIRED BY SECTION 4-33B, PART 1, TITLE 24, CCR
E. A "DSA CERTIFIED" PROJECT INSPECTOR EMPLOYED BY THE DISTRICT (OWNER) AND APPROVED BY THE DSA SHALL PROVIDE CONTINUOUS INSPECTION OF THE WORK. THE DUTIES OF THE INSPECTOR ARE DEFINED IN SECTION 4-342, PART 1, TITLE 24, CCR.
F. A DSA ACCEPTED TESTING LABORATORY DIRECTLY EMPLOYED BY THE DISTRICT (OWNER) SHALL CONDUCT ALL THE REQUIRED TEST AND INSPECTIONS FOR THE PROJECT.
G. THE INTENT OF THESE DRAWINGS AND SPECIFICATIONS IS THAT THE WORK OF THE ALTERATION, REHABILITATION OR RECONSTRUCTION IS TO BE IN ACCORDANCE WITH TITLE 24, CCR. SHOULD ANY EXISTING CONDITIONS SUCH AS DETERIORATION OR NON-COMPLYING CONSTRUCTION BE DISCOVERED WHICH IS NOT COVERED BY THE CONTRACT DOCUMENTS WHEREIN THE FINISHED WORK WILL NOT COMPLY WITH TITLE 24, CCR, A CONSTRUCTION CHANGE DOCUMENT (CCD), OR A SEPARATE SET OF PLANS AND SPECIFICATIONS DETAILING AND SPECIFYING THE REQUIRED WORK SHALL BE SUBMITTED TO AND APPROVED BY DSA BEFORE PROCEEDING WITH THE WORK. (SECTION 4-317(C), PART 1, TITLE 24, CCR)
H. "FIRE SAFETY DURING DEMOLITION AND CONSTRUCTION SHALL COMPLY WITH CBC CHAPTER 33 AND CFC CHAPTER 33."

1. MATERIALS AND WORKMANSHIP:
A. ALL WORK SHALL BE SKILLED AND QUALIFIED FOR THE WORK WHICH THEY PERFORM. ALL MATERIALS USED, UNLESS OTHERWISE SPECIFIED, SHALL BE NEW AND OF THE TYPES AND GRADES SPECIFIED.
B. WORKMANSHIP SHALL BE EQUAL OR BETTER IN QUALITY TO THAT REQUIRED BY THE CONSTRUCTION TRADES FOR A FINISHED PRODUCT.
C. THE CONTRACTOR SHALL CERTIFY THAT NO ASBESTOS CONTAINING BUILDING MATERIALS WHICH EXCEED STATE AND FEDERAL MANDATED SAFE ASBESTOS LEVELS HAVE BEEN USED IN THE CONSTRUCTION OF RELOCATABLE FACILITIES.
D. TESTING: TESTS OF MATERIALS SHALL BE BY A PERSON OR TESTING LABORATORY SELECTED BY THE OWNER WITH THE APPROVAL OF DSA AND ARCHITECT. THE OWNER SHALL BE RESPONSIBLE FOR THE COST OF ALL REQUIRED TESTING AND INSPECTIONS, EXCEPT FOR THE RETESTING REQUIRED BY THE FAILURE OF ANY MATERIAL TO PASS.
E. ERECTION AT THE SITE: THE BUILDING SHALL BE TRANSPORTED, ERECTED AND SET ON FOUNDATION AS REQUIRED BY A LICENSED TRANSPORT. ALL REQUIRED FINISH WORK SHALL BE COMPLETED BY SKILLED LABOR OF THE MANUFACTURER/CONTRACTOR, BUT WILL NOT INCLUDE UTILITIES SERVICE CONNECTION.
F. SITE WORK: THE SCHOOL DISTRICT SHALL PROVIDE ACCESS TO THE SITE FOR THE INSTALLATION OF THE BUILDING. REMOVAL OF TREES, SHRUBS, FENCING, SPRINKLERS, ETC. NECESSARY FOR THE MOVE-IN OF BUILDINGS SHALL BE THE RESPONSIBILITY OF THE SCHOOL DISTRICT. THE OWNER, UNLESS OTHERWISE SHOWN ON THE APPROVED PLANS, WILL PROVIDE SITE(S) SATISFACTORY TO THE ARCHITECT OR ENGINEER FOR THE INSTALLATION OF THE RELOCATABLE BUILDING(S) THAT ARE LEVEL AND HAVE STABLE SOIL CONDITIONS WITH ADEQUATE SITE DRAINAGE, EXCEPT IF DESIGNATED IN THE CONTRACT DOCUMENTS AS THE RESPONSIBILITY OF THE MANUFACTURER/CONTRACTOR. IF ADDITIONAL GRADING AND/OR LEVELING IS NECESSARY FOR PROPER INSTALLATION OF MODULAR UNITS, THE ADDITIONAL CHARGE WILL BE THE RESPONSIBILITY OF THE OWNER.
G. UTILITIES: THE OWNER WILL BE RESPONSIBLE FOR ANY AND ALL UTILITY, FIRE ALARM OR SPECIAL ELECTRICAL SIGNAL SYSTEM CONNECTIONS EXCEPT IF DESIGNATED IN THE CONTRACT DOCUMENTS AS THE RESPONSIBILITY OF THE MANUFACTURER/CONTRACTOR.

2. SCOPE OF WORK:
A. THE WORK CONSISTS OF MANUFACTURING OFF-SITE IN A PLANT, AND INSTALLING ON-SITE, MODULAR RELOCATABLE BUILDING AS DEFINED HEREIN AND SHOWN AND DETAILED ON DRAWINGS.
B. CONTRACTOR SHALL PROVIDE ALL LABOR, MATERIALS AND SERVICES TO PREPARE THE BUILDING ELEMENTS, TRANSPORT THEM FROM THE PLANT TO THE SITE AND TO COMPLETE THE ASSEMBLY AT THE SITE.
C. THE CONDITION OF THE SITE SHALL BE THE RESPONSIBILITY OF THE SCHOOL DISTRICT.
D. THE CONTRACTOR SHALL BE RESPONSIBLE FOR THE SAFETY OF THE BUILDING DURING CONSTRUCTION AND SHALL PROVIDE ADEQUATE SHORING AND BRACING DURING CONSTRUCTION. CONTRACTOR SHALL COMPLY WITH APPLICABLE SAFETY REGULATIONS

ASSEMBLY
A. IN A LOCATION AS DETERMINED BY THE SCHOOL DISTRICT, THE CONTRACTOR SHALL PLACE CONCRETE LEVELING STRIPS OR OTHER SUITABLE SUPPORTS AS DETAILED ON THE DRAWINGS.
B. THE ELEMENTS SHALL BE BROUGHT TO THE SITE ON WHEEL ASSEMBLY AND TRANSFERRED TO THE PREPARED SITE. GREAT CARE SHALL BE TAKEN TO AVOID DAMAGE TO THE ELEMENTS BY RACKING OR BUMPING.
C. CONNECTION OF THE ELEMENTS TOGETHER SHALL BE DONE ACCORDING TO INSTRUCTIONS ON THE DRAWINGS. FLASHING, TRIM AND OTHER LOOSE ITEMS SHALL BE INSTALLED PER DETAILS ON THE DRAWINGS.

INSPECTION
ALL REQUIREMENTS OF TITLE 19 AND 24 OF THE STATE OF CALIFORNIA CODE OF REGULATIONS (CCR) RELATING TO INSPECTIONS AND VERIFIED REPORTS SHALL BE COMPLIED WITH AND SHALL INCLUDE:
A. GENERAL RESPONSIBLE IN CHARGE OF FIELD ADMINISTRATION IS BY THE ARCHITECT OF RECORD.
B. INSPECTION OF IN-PLANT WORK DURING THE COURSE OF CONSTRUCTION BY AN INSPECTOR APPROVED BY THE DIVISION OF THE STATE ARCHITECT AND THE DISTRICT'S ARCHITECT OR OWNER. THE INSPECTOR SHALL BE RESPONSIBLE TO INSPECT THE GENERAL CONSTRUCTION, WELDING, FIRE PROOFING, MECHANICAL AND ELECTRICAL WORK. COST OF THESE INSPECTIONS SHALL BE BY THE SCHOOL DISTRICT OR OWNER.
C. ON SITE INSPECTION OF THE BUILDING SHALL BE PERFORMED BY AN INSPECTOR APPROVED BY THE DIVISION OF THE STATE ARCHITECT AND RETAINED BY THE SCHOOL DISTRICT OR OWNER.
D. OTHER SPECIAL TESTS OR INSPECTIONS, SUCH AS CONCRETE AND CONCRETE REINFORCEMENT PLACEMENT, MAY BE REQUIRED BY THE DIVISION OF THE STATE ARCHITECT.

3. WORK NOT INCLUDED:
A. ALL ON-SITE OR OFF-SITE UTILITIES AND THE CONNECTION OF THEM TO THE BUILDING UNLESS INDICATED ON THE DRAWINGS.
B. ALL LEVELING, GRADING OR OTHER SITE PREPARATION EXCEPT CONCRETE OR WOOD LEVELING STRIPS, WHERE REQUIRED, UNLESS OTHERWISE INDICATED ON THE DRAWINGS.
C. FIRE ALARM COMPONENTS ONLY, PROGRAM BELL, CLOCK, PUBLIC ADDRESS SYSTEM, INTERCOM SYSTEM, TV SYSTEM UNLESS OTHERWISE INDICATED ON THE DRAWINGS.

## GENERAL DESIGN REQUIREMENTS:

THE CONTRACTOR SHALL COORDINATE THE WORK OF ALL TRADES AND SHALL CHECK ALL DIMENSIONS. ANY DISCREPANCIES SHALL BE CALLED TO THE ATTENTION OF THE OWNER AND BE RESOLVED BEFORE PROCEEDING WITH THE WORK.

REFER TO ARCHITECTURAL DRAWINGS FOR DIMENSIONS AND OTHER INFORMATION NOT SPECIFICALLY SHOWN ON STRUCTURAL DRAWINGS.

DIMENSIONS AND ELEVATIONS SHOWN ARE APPROXIMATE AND ARE PROVIDED AS AN AID IN INTERPRETING THE DRAWINGS ONLY. DIMENSIONS AND ELEVATIONS MUST BE VERIFIED WITH ARCHITECTURAL DRAWINGS. IN THE EVENT OF CONFLICT, DIMENSIONS AND ELEVATIONS SHOWN ON ARCHITECTURAL DRAWINGS SHALL GOVERN. DRAWING SCALES GIVEN ARE APPROXIMATE - DO NOT SCALE PLANS OR DETAILS.

WHERE THESE GENERAL NOTES AND TYPICAL DETAILS ARE IN CONFLICT WITH THE SPECIFICATIONS, THESE GENERAL NOTES AND TYPICAL DETAILS SHALL GOVERN.

TYPICAL DETAILS SHALL APPLY UNLESS SHOWN OTHERWISE ON THE DRAWINGS.

DETAILS NOT SPECIFICALLY SHOWN SHALL BE SIMILAR TO DETAILS FOR SIMILAR CONSTRUCTION SHOWN ON THESE DRAWINGS.

NO STRUCTURAL MEMBERS SHALL BE CUT, NOTCHED OR OTHERWISE PENETRATED UNLESS SPECIFICALLY APPROVED BY THE STRUCTURAL ENGINEER IN ADVANCE OR SHOWN ON THESE DRAWINGS.

EACH MODULE SHALL BE PERMANENTLY IDENTIFIED WITH (2) METAL IDENTIFICATION TAGS 3"x1 1/2" MINIMUM SIZE. MECHANICALLY FASTEN ONE TAG VISIBLE FROM THE EXTERIOR AND THE OTHER TO THE INTERIOR FRAME ABOVE THE CEILING AT THE END OF THE MODULE. THE TAG SHALL HAVE THE FOLLOWING INFORMATION:

A. DSA APPLICATION NUMBER
B. BASIC WIND SPEED, EXPOSURE.
C. DESIGN ROOF LIVE LOAD
D. DESIGN FLOOR LIVE LOAD
E. BUILDER'S NAME
F. PLANT INSPECTOR/ID MARK
G. SERIAL NUMBER

STRUCTURAL FRAME - REFER TO STRUCTURAL DATA ON SHEET A0.0 FOR STRUCTURAL DESIGN TYPE. THE DESIGN STRUCTURE SHALL WITHSTAND VERTICAL AND HORIZONTAL LOADS AND COMPLY WITH REQUIREMENTS OF THE DIVISION OF THE STATE ARCHITECT. THE NECESSARY PROVISIONS ARE INCORPORATED IN THE STRUCTURE TO PERMIT THE RELOCATION OF THE STRUCTURAL FRAME IN SECTIONS NOT EXCEEDING 12 FEET IN WIDTH.

EACH MODULE SHALL BE CAPABLE OF RESISTING ALL VERTICAL AND LATERAL LOADS DURING TRANSPORTATION AND RELOCATION. (NORMAL INDUSTRY PRACTICE FOR BRACING MODULES DURING TRANSPORTATION IS ACCEPTABLE). WHEN MODULES ARE ASSEMBLED, JOINTS SHALL BE SEALED WITH REMOVABLE CLOSING STRIPS OR OTHER METHOD TO PRESENT A FINISHED APPEARANCE AND BE PERMANENTLY WATERPROOF.

EACH MODULE SHALL BE SUFFICIENTLY RIGID TO BE JACKED UP AT THE FRONT AND BACK CORNERS FOR RELOCATION WITHOUT DAMAGE OR THE MODULE SHALL HAVE LIFT LUGS AT FRONT AND BACK LOCATED AS REQUIRED SO THAT THE MODULE MAY BE JACKED UP FOR RELOCATION IN ONE PIECE WITHOUT ADDITIONAL SUPPORTS OF ANY TYPE. EVIDENCE OF EXCESSIVE BOWING DURING THE INSTALLATION OF THE MODULES WHICH, IN THE OPINION OF THE AGENCY ARCHITECT OR STRUCTURAL ENGINEER, CAUSES EXCESSIVE WORKING AT ANY JOINT OR COMPROMISES THE STRUCTURAL INTEGRITY OF THE MODULE, SHALL BE SUFFICIENT REASON FOR REJECTION OF THE MODULE.

PROVIDE OPENINGS, CURBS, FRAMING AND/OR SUPPORTS FOR ITEMS INDICATED ON ARCHITECTURAL, MECHANICAL, ELECTRICAL OR OTHER DRAWINGS INCLUDED IN CONSTRUCTION DOCUMENTS.

FRAMING - ROOF, WALLS AND FLOOR: FRAMING MEMBERS SHALL BE OF THE GRADE AND SIZE CALLED FOR ON THE STRUCTURAL PLANS.

ROOF OVERHANG - ALL OVERHANGS SHALL PRESENT A PLEASING AND FINISHED APPEARANCE. SOFFIT MATERIAL, WHEN USED, SHALL BE 3/8" MIN EXTERIOR SIDING. PLYWOOD SOFFIT MATERIAL SHALL BE APPLIED WITH EXPOSED GRAIN RUNNING PARALLEL TO THE LENGTH OF THE BUILDING. SOFFIT SHALL BE NEATLY AND CLOSELY FITTED AND TRIMMED TO COVER GAPS. ALL ENCLOSED SOFFIT AREAS SHALL BE VENTILATED PER THE CBC

FLOOR - THE FLOOR SHALL BE STEEL FRAMED WITH A DESIGN LIVE LOAD OF 50 LBS PER SQUARE FOOT UNLESS OTHERWISE NOTED ON THE DRAWINGS. THIS DOES NOT APPLY TO A SLAB ON GRADE CONDITION.

FIRE EXTINGUISHER - UL 2A:10BC, PRESSURE TYPE, +48" TO EXTINGUISHER HANDLE. +48" TO FIRE EXTINGUISHER HANDLE WHEN PROVIDED.

BUILDING INSULATION - SHALL COMPLY WITH CALIFORNIA QUALITY STANDARDS FOR INSULATING MATERIAL. FLAME SPREAD - MAX 25, SMOKE DEVELOP - MAX 450

BUILDING VENTILATION - PER SECTION 1202.4.1.1 OPENINGS FOR UNDER-FLOOR VENTILATION SHALL NOT BE LESS THAN 1 SQUARE FOOT (0.67m²) FOR EACH 150 SF OF CRAWL SPACE. THEY SHALL BE COVERED WITH CORROSION-RESISTANT WIRE MESH WITH MESH OPENINGS NOT LESS THAN 1/4 INCH (6.4 mm) NOR MORE THAN 1/2 INCH IN ANY DIRECTION.

WHEN MODULE IS RELOCATED - DO NOT REINSTALL NAILS OR SCREWS IN EXISTING HOLES.

## ELECTRICAL

1. SCOPE OF WORK:
CONTRACTOR SHALL PROVIDE ALL LABOR, MATERIALS AND SERVICES FOR ELECTRICAL INSTALLATION COMPLETE WITH ASSOCIATED EQUIPMENT AND FIXTURES IN OPERATING CONDITION READY FOR USE. THE WORK INCLUDES: LIGHT AND POWER SYSTEMS, LIGHTING FIXTURES COMPLETE WITH LAMPS, CONNECTIONS AND DISCONNECTS TO A/C EQUIPMENT.

2. MATERIALS:
ALL NEW COMPLYING WITH REQUIREMENTS OF CBC AND CEC
A. ELECTRIC METALLIC TUBING: COUPLINGS AND FLEX CONDUIT GALVANIZED OR SHERARDIZED.
B. PANEL BOARDS: FLUSH MOUNTED WITH HINGED DOORS AND INDEXED CARD HOLDERS.
C. CONDUCTORS: COPPER, INSULATED FOR 600 VOLTS, TYPE THHN FOR SIZES #12 TO #6, TYPE THW FOR LARGER SIZES. MINIMUM SIZE- #12.
D. RECEPTACLE: GENERAL ELECTRIC 5242-2 OR EQUAL, +15" AFF MIN TO BTM OF BOX.
E. CLOCK RECEPTACLE: EAGLE OR EQUAL.
F. SWITCHES: GENERAL ELECTRIC 5901-2 OR EQUAL, +48" AFF MAX TO TOP OF BOX.
G. 2'x4' LED DROP IN LIGHT FIXTURE ,55 WATTS, WEIGHT 27 LBS, UNO ON SHEET E0.0
H. ALL ELECTRICAL WIRING 110V AND GREATER SHALL BE IN CONDUIT SYSTEMS AND SHALL MEET OR EXCEED THE REQUIREMENTS OF CEC MINIMUM SIZE CONDUIT IS 1/2" MIN
I. ACCEPTABLE CONDUIT: RIGID ELECTRICAL METALLIC TUBING (EMT); GALVANIZED THIN WALL FLEXIBLE (INTERIOR); GALVANIZED STEEL FLEXIBLE (EXTERIOR); GALVANIZED STEEL WITH FACTORY APPLIED PVC
J. ALL CONDUITS SHALL BE CONTINUOUS FROM OUTLET TO OUTLET AND SHALL BE SECURED IN CONFORMANCE WITH CEC FIELD BENDS SHALL BE AVOIDED WHEREVER POSSIBLE. WHERE BENDS MUST BE MADE, USE AN APPROPRIATE "HICKEY" OR BENDING MACHINE. REAM AND DEBUR ALL CONDUIT PRIOR TO INSTALLATION AND TERMINATE IN APPROPRIATE BUSHINGS OR CONNECTORS, JACKET. WIRING SHALL BE #12 MIN COPPER TYPE TW, THW, THWN AS APPLICABLE. CONDUIT FILL SHALL NOT EXCEED REQUIREMENTS OF CEC A SEPARATE GROUNDING CONDUCTOR SHALL BE PULLED THROUGHOUT THE ENTIRE SYSTEM. CARE SHALL BE TAKEN TO AVOID DAMAGE TO WIRE OR INSULATION DURING PULLING. POWDERED SOAPSTONE OR A PULLING COMPOUND SUCH AS "YELLOW 77" LUBRICANT MAY BE USED IF NECESSARY.

3. WORKMANSHIP
MATERIAL AND EQUIPMENT INSTALLED IN A SECURE, NEAT, WORKMANLIKE MANNER IN ACCORDANCE WITH CODE REQUIREMENTS, PANEL BOARD CARDS FILLED OUT. CONDUIT AND CABLE INSTALLED IN WALL AND CEILING SPACES. WORK PIERCING WATERPROOFED AREAS FLASHED AND SEALED TO A WATERTIGHT CONDITION.

## GROUNDING OF BUILDING COMPONENTS

1. THE OWNER, UNLESS OTHERWISE NOTED IN THE CONTRACT DOCUMENTS, SHALL BE THE RESPONSIBLE FOR PROVIDING THE NECESSARY GROUNDING OF THE BUILDING ELECTRICAL SYSTEM PER CEC TABLE 250 AND DSA IR E-1.
2. THE PROJECT INSPECTOR SHALL WITNESS AND VERIFY THE GROUNDING TESTS.

## PAINTING

1. SCOPE OF WORK
CONTRACTOR SHALL PROVIDE ALL LABOR, MATERIALS AND SERVICES TO PAINT BUILDINGS. ALL EXPOSED SURFACES OF BUILDING AND RAMP SHALL BE PAINTED EXCEPT ALUMINUM WINDOW FRAMES AND THRESHOLDS, CFC CHAPTER 15, REFERENCE SHEET A0.6 FOR VOC LIMITS

2. MATERIALS
A. EXTERIOR WOOD- VISTA BRAND 4100 PRIMER, 6000 FINISH (0R EQUAL)
B. INTERIOR TRIM- VISTA BRAND 7000 FINISH (OR EQUAL)
C. METAL- VISTA BRAND 7000 FINISH (OR EQUAL)

3. WORKMANSHIP
A. EXTERIOR- WOOD SIDING, TRIM AND SKIRTING- APPLY TWO COATS OF EXTERIOR FLAT ACRYLIC PAINT SPRAYED ON.
B. INTERIOR TRIM- TRIM NOT PRE COATED SHALL BE PAINTED WITH TWO COATS OF SEMI GLOSS LATEX OVER PRIMER.
C. METAL- ALL METAL SURFACES SHALL BE PAINTED WITH TWO COATS OF ALKYD FINISH COAT OVER SHOP COAT.
D. RAMP- ONE COAT OF NONSKID SURFACING.

## MECHANICAL SECTION

1. SCOPE OF WORK:
CONTRACTOR SHALL PROVIDE ALL LABOR, MATERIALS AND SERVICES TO INSTALL THE AIR CONDITION SYSTEM AS SHOWN ON THE DRAWINGS INCLUDING A/C UNITS AND ACCESSORIES, REMOTE THERMOSTAT, GRILLS AND POWER WIRING COMPLETE TO LOAD CENTER. CONTRACTOR SHALL INSTRUCT OWNER'S OPERATORS ON OPERATION AND MAINTENANCE OF A/C SYSTEM.

2. WORKMANSHIP:
UNITS SHALL BE INSTALLED COMPLETE AND OPERATING WITH ALL ACCESSORIES IN ACCORDANCE WITH THE MANUFACTURERS INSTRUCTIONS.

3. EQUIPMENT: SEE A/C INFORMATION SCHEDULE FOR SIZE AND TYPE
A. FACTORY MADE AIR DUCTS. FACTORY MADE AIR DUCTS SHALL BE APPROVED FOR THE USE INTENDED OR SHALL CONFORM TO THE REQUIREMENTS OF CMC. EACH PORTION OF A FACTORY MADE AIR DUCT SYSTEM SHALL BE IDENTIFIED BY THE MANUFACTURER WITH A LABEL OR OTHER SUITABLE IDENTIFICATION INDICATING COMPLIANCE WITH CMC AND SHALL BE INSTALLED IN ACCORDANCE WITH THE TERMS OF THEIR LISTING.
B. INSULATION APPLIED TO THE EXTERIOR SURFACE OF DUCTS LOCATED IN BUILDINGS SHALL HAVE A FLAME SPREAD OF NOT MORE THAN 25 AND A SMOKE DENSITY OF NOT MORE THAN 50 WHEN TESTED AS A COMPOSITE INSTALLATION INCLUDING INSULATION, FACING MATERIALS, TAPES AND ADHESIVES AS NORMALLY APPLIED, SECTION 720, 2022 CBC
C. MATERIAL EXPOSED WITHIN DUCTS OR PLENUMS SHALL HAVE A FLAME SPREAD RATING OF NOT MORE THAN 25 AND A SMOKE DEVELOPMENT RATING OF NOT MORE THAN 50.
D. AIR FILTERS. AIR FILTERS SHALL COMPLY WITH THE STANDARD FILTER UNITS & TEST PERFORMANCE THAT IS REFERENCED IN CHAPTER 17, AS CLASS I OR II, CMC
E. PIPE AND TUBING. INSULATION AND COVERING ON PIPE AND TUBING SHALL HAVE A FLAME SPREAD-RATING NOT TO EXCEED 25 AND A SMOKE DENSITY NOT TO EXCEED 450 WHEN TESTED IN ACCORDANCE WITH CBC SECTION 720.7

## CARPENTRY

1. SCOPE OF WORK
CONTRACTOR SHALL PROVIDE ALL LABOR, MATERIALS AND SERVICES TO INSTALL CARPENTRY

2. MATERIALS
LUMBER GRADE MARKED IN ACCORDANCE WITH "STANDARD GRADING AND DRESSING RULES NO. 17" OF WEST COAST LUMBER INSPECTION BUREAU OR "WESTERN LUMBING FOR GRADING RULES 2015 EDITION" OF WESTERN WOOD PRODUCTS ASSOCIATION. PLYWOOD GRADE MARKED IN ACCORDANCE WITH "PRODUCT STANDARD PS 1-09 FOR STRUCTURAL PLYWOOD" OF AMERICAN PLYWOOD ASSOCIATION, COMPLYING WITH CURRENT CBC REFERENCE STANDARDS
A. HEADERS: HEM FIR STUD GRADE OR BETTER
B. PLATES: HEM FIR STUD GRADE OR BETTER.
C. BLOCKING: HEM FIR STUD GRADE OR BETTER
D. TREATED LUMBER: SILLS AND LUMBER IN CONTACT WITH CONCRETE, MASONRY, ASPHALT OR EARTH-HEMLOCK FIR PRESSURE TREATED WITH PRESERVATIVE AS SPECIFIED IN 2303.1.9 OF CBC AWPA STANDARD U1 AND M4; 2X GRADE MEMBERS CUT ENDS DIPPED IN PRESERVATIVE (CUPONAL).
E. PLYWOOD ROOF DECKING: APA RATED, 7/16" MIN. C-D EXPOSURE 1, 24/16 SPAN RATING, PS 1-09
F. PLYWOOD FLOOR DECKING: 1 1/8" A.P.A. RATED STURD-1-FLOOR OR EQUAL. PS 1-09 T&G EDGES, 48" SPAN RATING
G. EXTERIOR SIDING/SHEATHING: APA TYPE 303, EXTERIOR, MDO 8" OC, SIDING. SHEATHING 1/2" CDX.
H. STUDS AND POSTS: HEM FIR STUD GRADE
I. FASTENERS: ALL NAILS SHALL BE CORROSION RESISTANT PER CBC SECTION 2304.10.1.1 & 2304.10.5
J. BUILDING TRIM: 1x RESAWN SELECT HF OR MASONITE
K. DOOR/WINDOW TRIM: 1x4 RESAWN HF

3. WORKMANSHIP
A. FRAMING: SECURELY NAILED, BRIDGED AND BLOCKED TO FORM RIGID STRUCTURE. WORK CUT, FITTED AND ASSEMBLED LEVEL, PLUMB AND TRUE TO LINE. TRIM IN AS LONG LENGTHS AS POSSIBLE WITH ALL STANDING TRIM IN ONE PIECE. TRIM SEALED AT ALL EDGES.
B. NAILING: IN ACCORDANCE WITH CBC TABLE 2304.10.1. NAILS SHALL BE CORROSION RESISTANT BOX NAILS PER 2304.10.1.1 AND 2304.10.5.
C. EXTERIOR WALLS: FACTORY FABRICATED. CAULKING PROVIDED BETWEEN PERIMETER OF WALLS AND STRUCTURAL MEMBERS PROVIDING WEATHERPROOF AND WATERTIGHT SEAL. NECESSARY CLOSURES, SEALS, FLASHING PLACED AT TOP AND BASE SUPPORT OF PANELS AND AROUND OPENINGS
D. MACHINE APPLIED NAILING: SHALL HAVE PRIOR DEMONSTRATION AND APPROVAL BY DSA FIELD INSPECTOR AND THE ARCHITECT. THE APPROVAL IS SUBJECT TO CONTINUES SATISFACTORY PERFORMANCE. PLYWOOD SHALL HAVE A MINIMUM THICKNESS OF 3/8". IF NAIL HEADS PENETRATE THE OUTER PLY MORE THAN WOULD BE NORMAL FOR A HAND HAMMER OR IF MINIMUM ALLOWABLE EDGE DISTANCES ARE NOT MAINTAINED, THE PERFORMANCE WILL BE DEEMED UNSATISFACTORY
E. TRIM SEALED AT ALL EDGES. SEALANT PAINTED TO MATCH TRIM OR SIDING
F. RETIGHTEN ALL BOLTS BEFORE CLOSING IN
G. THE DESIGN MOISTURE CONTENT OF LUMBER IS 19% OR LESS BEFORE FABRICATION, OTHER REVISION THRU CHANGE ORDER WILL BE REQUIRED

## SEALANT & WEATHER RESISTANT

1. SCOPE OF WORK:
CONTRACTOR SHALL PROVIDE ALL LABOR, MATERIALS AND SERVICES TO SEAL THE BUILDINGS.

2. MATERIALS:
A. "VULKEM" SEALANT, POLYURETHANE, MANUFACTURED BY MAMECO INTERNATIONAL OR APPROVED EQUAL, TO BE USED AT ALL STANDING SEAM ROOFING DETAILS.
SEALANT APPLIED TO DRY CLEAN SURFACES, WHEREVER INDICATED ON DETAILS AND AS NEEDED TO MAKE BUILDING WATERTIGHT, IN ACCORDANCE WITH MANUFACTURERS SPECIFICATIONS, REFER TO SHEET A0.6 FOR VOC LIMITS

MOISTURE BARRIER:
ALL WEATHER-EXPOSED SURFACES SHALL HAVE A WEATHER-RESISTIVE BARRIER TO PROTECT THE INTERIOR WALL COVERING. SUCH BARRIER SHALL BE EQUAL TO THAT PROVIDED FOR IN THE CBC 1404.2 & 2510.6. BARRIER SHALL BE FREE FROM HOLES AND BREAKS OTHER THAN THOSE CREATED BY FASTENERS AND CONSTRUCTION SYSTEM DUE TO ATTACHING OF THE BUILDING PAPER.

ZBAR:
ALL HORIZONTAL JOINTS IN SIDING SHALL BE PROTECTED BY GALVANIZED "Z BAR- 3/4 x 5/8 x 3/4" FLASHING.
FLASHING NEED NOT BE USED WHERE SKIRTING MEETS THE UNDERSIDE OF AN EXPOSED METAL FRAME AND THE SKIRTING IS RECESSED SUFFICIENTLY TO PROTECT THE TOP EDGE OF PLYWOOD. APPLY SEALANT TO SEAM FOR WEATHER-RESISTANCE.

## SHEET METAL

1. SCOPE OF WORK:
CONTRACTOR SHALL PROVIDE ALL MATERIALS, LABOR AND SERVICES TO INSTALL INDICATED SHEET METAL.

2. MATERIALS:
A. SHEET METAL- STEEL SHEETS HOT DIP GALVANIZED WITH 1.25 OZ PER SQUARE FOOT ZINC COATING CONFORMING TO ASTM A123. MINIMUM 26 GA
B. SOLDER- OF STANDARD BRAND, GRADE A OF EQUAL PARTS LEAD AND TIN ASTM B32.
C. FLUX- ZINC SATURATED MURATIC ACID.

3. WORKMANSHIP:
SHEET METAL ACCURATELY FORMED TO DIMENSIONS AND SHAPES DETAILED WITH TRUE STRAIGHT LINES, CORNERS AND ANGLES. FLASHING INSTALLED IN LONGEST LENGTHS POSSIBLE. EXTERIOR WORK FORMED, FABRICATED AND INSTALLED SO THAT IT ADEQUATELY PROVIDES FOR EXPANSION AND CONTRACTION IN THE COMPLETED WORK AND FINISHES WATER AND WEATHER TIGHT.

## STRUCTURAL AND MISC STEEL

1. SCOPE OF WORK:
CONTRACTOR SHALL PROVIDE ALL MATERIALS, LABOR AND AS SPECIFIED AND INDICATED ON THE DRAWINGS, AND SERVICES REQUIRED FOR STRUCTURAL AND MISCELLANEOUS STEEL

2. MATERIALS:
REFER TO SHEET S0.0 FOR STRUCTURAL STEEL AND COLD FORMED STRUCTURAL STEEL INFORMATION

3. WORKMANSHIP
A. NAILS, BOLTS, SCREWS, NUTS, ETC. EXTERIOR WORK SHALL BE CADMIUM PLATED OR GALVANIZED.
B. HANDRAILS FOR STAIRS AND RAMPS: SEE RAMP OR STAIR SHEETS
C. SHOP PAINT:
1. EXPOSED STEEL COATED WITH ONE COAT SHOP COAT
2. NON-EXPOSED STEEL COATED WITH ONE COAT SHOP COAT
3. ALL SURFACES THOROUGHLY CLEANED BY EFFECTIVE MEANS PRIOR TO APPLICATION OF SHOPS COAT
D. TESTS: PROVIDE MILL CERTIFICATES OR TEST ALL MEMBERS. WELDS SHALL BE INSPECTED AND/OR TESTED PER SECTION 1705A.2.5
E. PERFORM SPECIAL INSPECTION FOR INTUMESCENT FIRE RETARDANT COATINGS PER SECTION 1705A.14

## ACOUSTICAL CONTROL

REFER TO SHEET A0.6 FOR ACOUSTICAL CONTROL INFORMATION

## ABBREVIATIONS

AC: Air Conditioning, Alternating Current
ADA: Americans with Disabilities Act of 1992
AFF: Above Finished Floor
AFG: Above Finish Grade
AIA: American Institute of Architects
ALT: Alternate
AMP: Ampere
APPROX: Approximate
ARCH: Architect, Architectural
ASCE: American Society of Civil Engineers
ASME: American Society of Mechanical Engineers
ASTM: American Society for Testing and Materials

BLDG: Building
BLK: Block
BLKG: Blocking
BOT: Bottom
BTU: British Thermal Units
BTUH: British Thermal Units per Hour

C/C: Center to Center
CI: Cast Iron
CIR: Circle, Circular, Circuit
CJ: Control Joint
CL: Centerline
CLR: Clear
CO: Cleanout
CONC: Concrete
CONN: Connection
CONST: Construction
CONT: Continuous

DF: Douglas Fir
DIA: Diameter
DIM: Dimension
DISP: Dispenser
DL: Dead Load
DWG: Drawing

(E): Existing
EA: Each
ELEC: Electrical
ELEV: Elevation
EN: End Nail
EPDM: Ethylene Propylene Diene Monomer
EQ: Equal
EXT: Exterior

FE: Fire Extinguisher
FF: Finished Floor
FG: Finished Grade
FLR: Floor
FOF: Face of Finish
FT: Foot
FTG: Footing

GA: Gauge
GAL: Gallon
GALV: Galvanized
GFCI: Ground Fault Circuit Interrupted
GFI: Ground Fault Interrupted
GI: Galvanized Iron
GND: Ground

HDR: Header
HF: Hem Fir
HR: Hour
HT: Height
HVAC: Heating, Ventilating & Air Conditioning

ID: Inside Diameter
IN: Inch
INFO: Information
INT: Interior

J-BOX: Junction Box
JT: Joint

KW: Kilowatt

LB: Pound (weight)
LL: Live Load

MAX: Maximum
MECH: Mechanical
MFG: Manufacturer
MIN: Minimum
MISC: Miscellaneous
MT: Mount, Mounted

(N): New
NEC: National Electrical Code
NTS: Not To Scale

O/O: Outside to Outside
OC: On Center
OD: Outside Diameter
OPP: Opposite

PC: Pre-Checked
PH: Phase
PSF: Pounds per square foot
PSI: Pounds per square inch
PT: Pressure Treaded
PVC: Polyvinyl Chloride

QTY: Quantity

RCP: Reflected Ceiling Plan
REBAR: Reinforcing Bar
RECEPT: Receptacle
REF: Refrigerator
REQ: Required
REV: Revise
RF: Roof
RH: Right Hand
RO: Rough Opening

SF: Square Foot
SIM: Similar
SPEC: Specification
SS: Stainless Steel
STD: Standard
STRUCT: Structural

T&G: Tongue & Groove
TEMP: Temporary
THRU: Through
TN: Toe Nail
TPO: Thermo Plastic Olefin
TSTAT: Thermostat
TYP: Typical

UL: Underwriters' Laboratories
UNO: Unless Noted Otherwise

V: Volt
VTR: Vent Through Roof

WD: Wood
WP: Waterproof, Weatherproof
WT: Weight

STATE AGENCY APPROVAL

IDENTIFICATION STAMP
DIV. OF THE STATE ARCHITECT
APP. 04-124098 INC:
REVIEWED FOR
SS ☑ FLS ☑ ACS ☑
DATE: 11/14/24

KSC COMPANY
15345 FAIRFIELD RANCH ROAD, SUITE #160, CHINO, CA 91709
OFFICE: (909) 740-3120, FAX: (909) 726-9470
WEBSITE: WWW.SKCCOMPANY.COM
MANUFACTURER #MF1279666 DEALER # DL1279666
GC LIC # 992118 SBE CERTIFIED

ALL DESIGNS INDICATED ON THESE PLANS/DRAWINGS ARE PROPERTY OF SKC, INC AND ARE FOR THE USE BY SKC IN THE SPECIFIED JOB ONLY. THEY SHALL NOT BE USED AND/OR DUPLICATED OR TRANSMITTED IN ANY FORM, FOR ANY PURPOSE WITHOUT THE PRIOR WRITTEN CONSENT OF SKC, INC. ANY UNAUTHORIZED USE OF THESE PLANS SHALL SUBJECT THE OWNER OF SAID PROPERTY TO LIQUIDATED DAMAGES OF $75,000.00. THESE PLANS ARE PROTECTED UNDER THE PROVISIONS OF THE 1976 COPYRIGHT ACT COPYRIGHT SKC, © ALL RIGHTS RESERVED.

DISTRICT/CUSTOMER NAME: NEXTMOD

SCHOOL/SITE NAME: STOCKPILE

SHEET TITLE:

SPECIFICATIONS AND NOTES

PRE-CHECK (PC) DOCUMENT
CODE: 2022 CBC
A SEPARATE PROJECT APPLICATION FOR CONSTRUCTION IS REQUIRED

APPROVED
DIV. OF THE STATE ARCHITECT
APP: 04-122454 PC
REVIEWED FOR
SS ☑ FLS ☑ ACS ☑ CG ☑
DATE: 11/14/2023

PROFESSIONAL OF RECORD ON PC
ORION Structural Engineering, Inc.
11305 RANCHO BERNARDO RD SUITE 121
SAN DIEGO CA. 92127
PHONE (858) 679-1974

REGISTERED PROFESSIONAL ENGINEER
RYAN J. OVER
No. S 4437
EXP. 12/31/24
STRUCTURAL
STATE OF CALIFORNIA

FIRM: Orion Structural Engineering, Inc.
ADDRESS: 11305 Rancho Bernardo Road Ste 121
CITY: San Diego, CA
PHONE: 858-679-1974

PROJECT SPECIFIC PROFESSIONAL OF RECORD

FIRM:
ADDRESS:
CITY:
PHONE:

REVISIONS

| | |
|---|---|
| 1 | - |
| 2 | - |
| 3 | - |
| 4 | - |
| 5 | - |

| | |
|---|---|
| PROJECT NO.: | 00-0000 |
| DRAFTER: | 00 |
| SCALE: | AS NOTED |
| DATE: | 00-00-00 |

SHEET NUMBER

# A0.1

10/31/2023 11:41:42 AM

## ROOFING:

FIRESTONE ULTRAPLY TPO:
PER CBC SECTION 1505 CLASS 'A' BASE SHEET FINISHED GRADE.
FIRESTONE ULTRAPLY TPO MEMBRANE ROOFING SYSTEM (THERMOPLASTIC POLYFIN BASED MEMBRANE) ADHESIVELY OR MECHANICALLY ATTACHED OVER INSULATED, COMBUSTIBLE OR NON-COMBUSTIBLE DECKS. CLASS 'A'. THE TPO MEMBRANES ARE PRODUCED WITH A POLYESTER WEFT INSERTED REINFORCEMENT. SYNTHETIC RUBBER SINGLE-PLY SHEETS HAVING A MIN NOMINAL THICKNESS OF 45 MILS (1.1 MM). INSTALL PER MANUFACTURER INSTALLATION INSTRUCTIONS.

STEVENS EP TPO:
PER CBC SECTION 1505 CLASS 'A' BASE SHEET FINISHED GRADE. STEVENS EP TPO MEMBRANE ROOFING SYSTEM (SCRIM REINFORCED ETHYLENE-PROPYLENE BASED MEMBRANE) ADHESIVELY OR MECHANICALLY ATTACHED OVER INSULATED, COMBUSTIBLE OR NON-COMBUSTIBLE DECKS. CLASS 'A'. THE TPO MEMBRANES ARE SCRIM REINFORCED SYNTHETIC RUBBER SINGLE-PLY SHEETS HAVING A MIN NOMINAL THICKNESS OF 45 MILS (1.1 MM). INSTALL PER MANUFACTURER INSTALLATION INSTRUCTIONS.

1/4" DENS-DECK ROOF BOARD:
USED AS A UNDERLAYMENT FOR THE TPO MEMBRANE ROOFING SYSTEM. FLAME SPREAD: 0, SMOKE DEVELOPED: 0 PER, ASTM E-84. INSTALL PER ROOFING MANUFACTURER INSTALLATION INSTRUCTIONS.

## EXTERIOR:

PLYWOOD SIDING:
DURATEMP GROOVED 8" OC APA PRODUCT REPORT #PR-C302 OR
LP SMARTSIDE PRECISION PANE; SIDING GROOVED 8" OC ICC REPORT #ESR-1301

PAPER (WATER-RESISTIVE BARRIER) PER SECTION 1404.2 & 2510.6: A MINIMUM OF TWO LAYER OF NO.15 ASPHALT FELT, COMPLYING WITH ASTM D 226 FOR TYPE 1 FELT OR OTHER APPROVED MATERIAL, SHALL BE ATTACHED TO STUDS OR SHEATHING, WITH FLASHING AS DESCRIBED IN SECTION 1405.3, IN SUCH A MANNER AS TO PROVIDE A CONTINUOUS WATER-RESISTIVE BARRIER BEHIND THE EXTERIOR WALL VENEER.

LATH/FURRING AND PLASTER (STUCCO):
CBC SECTION 2507 & 2510:

PAPER (WATER-RESISTIVE BARRIER) PER SECTION 1404.2 & 2510.6: A MINIMUM OF TWO LAYER OF NO.15 ASPHALT FELT, COMPLYING WITH ASTM D 226 FOR TYPE 1 FELT OR OTHER APPROVED MATERIAL, SHALL BE ATTACHED TO STUDS OR SHEATHING, WITH FLASHING AS DESCRIBED IN SECTION 1405.3, IN SUCH A MANNER AS TO PROVIDE A CONTINUOUS WATER-RESISTIVE BARRIER BEHIND THE EXTERIOR WALL VENEER.

SELF-FURRING LATH (VERTICAL APPLICATION): USE SELF-FURRING LATH CONFORMING TO 1/4" OFFSET REQUIREMENTS OF ASTM C 933 SECTION 5.12. INSTALL SELF-FURRING LATH PER DSA IR 25-4 AND ASTM C 1063.

RIB LATH (HORIZONTAL APPLICATION): USE 3/8" RIB LATH PER ASTM C 847. PROVIDE MIN. 1/2" SIDE LAP WITH WIRE TIES AT 6" O.C. PROVIDE 1" END LAPS OVER SUPPORTS WITH MAJOR RIBS NESTED.

CEMENT: INSTALL AND COMPLY WITH SECTIONS 2510, 2512, AND ASTM C 926.

WINDOWS:
HORIZONTAL SLIDING, 50% VENTING, ANODIZED ALUMINUM FRAME. PERFORMANCE RATED PER AAMA GS101-88 FOR COMMERCIAL USE AND MEDIUM EXPOSURE, NAIL-ON FIN FASTENED DIRECTLY TO FRAMING AND BEHIND SIDING MATERIAL, REMOVABLE SCREEN AT VENT SASHES. LAMINATED OR TEMPERED GLAZING TO BE NOTED ON FLOOR PLAN. DUAL GLAZED WINDOWS TO HAVE MINIMUM 1/4" AIR SPACE AND 1/8" GLASS (SEE WINDOW SCHEDULE FOR SIZES)

## INTERIOR:

INTERIOR WALL COVERINGS:
APPLIED OVER MINIMUM 1/2" GYPSUM BOARD, OR MINIMUM 3/8" ORIENTED STRAND BOARD. EXPOSED SURFACES FIRE RATED PER ASTM E-84, FLAME SPREAD MAXIMUM 200, SMOKE DEVELOPED MAXIMUM 450. (PROVIDE FIRE BLOCKING WHEN 3/8" OSB IS USED AS BACKING MATERIAL)

VINYL TACKBOARD:
VINYL WALL COVERING TO BE CLASS III DOMTAR GYPSUM OR EQUAL, LAMINATED ONTO 1/2" INDUSTRIAL INSULATION BOARD, 4'-0"x9'-0", LONG EDGES BEVELED. FLAME SPREAD = 65 SMOKE DENSITY = 175

FRP:
FIBERGLASS REINFORCED PLASTIC PANELS, 4'-0"x8'-0", WITH COLOR MATCHED PVC MOLDINGS OVER 1/2 GYPSUM. FLAME SPREAD = 25 AND SMOKE DEVELOPMENT = 450, CLASS A PER ASTM E-84

MARKER BOARDS:
1/2" PARTICLE BOARD SUBSTRATE, FULL WIDTH MAP RAIL W/ CORK INSERT AND SIX MAP HOOKS, EXTRUDED ALUMINUM MOLDING WITH FLAG HOLDER. CHALK TRAY MAY NOT PROJECT MORE THAN 4".

## CEILING:

SUSPENDED T-BAR SYSTEM:
PERFORMANCE RATED ASTM C-635 HEAVY DUTY FLAME SPREAD MAX 0-25, SMOKE DEVELOP MAX 450.

ACOUSTIC LAY-IN CEILING PANELS:
LIGHT REFLECTIVE LR-1, FIRE RATED CLASS-A PER ASTM E-84. VINYL FACED FIBERGLASS, 5/8" THICK, ARMSTRONG OR EQUIV. CLASS A: FLAME SPREAD 25 (UL LABELED) PER ASTM E-1264. SMOKE DEVELOP MAX 450

## FLOORING:

CARPET:
PROVIDE GLUE-DOWN OR FIRM CUSHION, PAD OR BACKING OR NO CUSHION PAD; AND HAVE A LEVEL LOOP, TEXTURED LOOP, LEVEL-CUT PILE OR LEVEL-CUT/UNCUT PILE TEXTURE. THE MAXIMUM PILE HEIGHT SHALL BE 1/2" PER SECTION 11B-302.2. EXPOSED EDGES OR CARPET SHALL BE FASTENED TO FLOOR SURFACES AND HAVE TRIM ALONG THE ENTIRE LENGTH OF THE EXPOSED EDGE. CARPET EDGE TRIM SHALL COMPLY WITH SECTION 11B-303. MINIMUM CRITICAL RADIANT FLUX SHALL NOTEXCEED 0.45 WATTS PER SQUARE CENTIMETER.

SEE CARPET CONT ON THIS SHEET FOR CALGREEN REQUIREMENTS

VINYL SHEET FLOORING:
MINIMUM WEAR LAYER .050" THICK, PERFORMANCE RATED PER ASTM F1303-90 TYPE-II, GRADE-1, CLASS-A, AND ASTM F970 125 PSI, FIRE RATED PER ASTM E648 FLAMMABILITY CLASS-I, AND ASTM E662 SMOKE DENSITY MAX 450. MIN COEFFICIENT OF FRICTION TO BE 0.6 PER ASTM D-2047 & CBC SECTION 11B-302

VINYL COMPOSITION TILE:
12" SQUARE, MINIMUM 1/8" THICK, PERFORMANCE RATED PER ASTM F1066, COMP-1, CLASS-2, AND ASTM F970 75 PSI, FIRE RATED PER ASTM E648 FLAMMABILITY CLASS-1, AND ASTM E662 SMOKE DENSITY MAX 450. MIN COEFFICIENT OF FRICTION TO BE 0.6 PER ASTM D2047

TOP SET BASE:
BURKE MOLDED RUBBER 1/8" THICK, 4" HEIGHT, COVE STYLE #502-P, OR EQ

CERAMIC TILE FLOORING:
CERAMIC TILE FLOORING SHALL HAVE A COEFFICIENT OF FRICTION OF AT LEAST 0.6 PER ASTM C-1028.

QUARRY TILE FLOORING:
QUARRY TILE FLOORING SHALL HAVE A COEFFICIENT OF FRICTION OF AT LEAST 0.6 PER ASTM C-1028

RESILIENT FLOORING:
RESILIENT FLOORING DEMONSTRATING A COEFFICIENT OF FRICTION OF AT LEAST 0.6 PER ASTM D2047 WILL BE ACCEPTED AS MEETING THE INTENT OF SLIP RESISTANCE. CBC 124B.1/ADA STANDARDS 4.5.1. AT LEAST 80% OF THE FLOOR AREA RECEIVING RESILIENT FLOORING AND SHOWN THAT AT LEAST ONE OF THE FOUR TESTING OR PRODUCTS MEET THE REQUIREMENTS SHOWN ON SECTION 5.504.4.6

## DOORS:

FINISH HARDWARE:
HAND-ACTIVATED DOOR OPENING HARDWARE, HANDLES, PULLS, LATCHES, LOCKS, AND OTHER OPERATING DEVICES ON ACCESSIBLE DOORS SHALL BE OPERABLE WITH ONE HAND AND SHALL NOT REQUIRE TIGHT GRASPING, PINCHING, OR TWISTING OF THE WRIST. THE FORCE REQUIRED TO ACTIVATE OPERABLE PARTS SHALL BE 5 POUNDS (22.2n) MAXIMUM AND DOES NOT REQUIRE MORE THAN 5 POUNDS MAXIMUM FORCE TO OPERATE SECTION 11B-309.4.

HARDWARE:
MOUNTING HEIGHT OF LATCHING HARDWARE SHALL BE 34" TO 44" AFF PER CBC SECTION 11B.-404.2.7. 11B-404.2.9 DOOR AND GATE OPENING FORCE. THE FORCE FOR PUSHING OR PULLING OPEN A DOOR OR GATE SHALL BE AS FOLLOWS:

1. INTERIOR HINGED DOORS AND GATES: 5 POUNDS (22.2 N) MAXIMUM
2. SLIDING OR FOLDING DOORS: 5 POUNDS (22.2 N) MAXIMUM
3. REQUIRED FIRE DOORS: THE MINIMUM OPENING FORCE ALLOWABLE BY THE APPROPRIATE ADMINISTRATIVE AUTHORITY NOT TO EXCEED 15 POUNDS (66.7 N)
4. EXTERIOR HINGED DOORS: 5 POUNDS (22.2 N) MAXIMUM

DOOR CLOSERS AND GATE CLOSERS:
DOOR CLOSERS AND GATE CLOSERS SHALL BE ADJUSTED SO THAT FROM AN OPEN POSITION OF 90 DEGREES, THE TIME REQUIRED TO MOVE THE DOOR TO A POSITION OF 12 DEGREES FROM THE LATCH IS 5 SECONDS MINIMUM PER CBC SECTION 11B-404.2.8.1

THRESHOLD:
THRESHOLD SHALL COMPLY WITH CBC SECTIONS 11B-404.2.5 AND 1010.1.7

FLOOR STOPS:
FLOOR STOPS SHALL NOT BE LOCATED IN THE PATH OF TRAVEL AND 4" MAXIMUM FROM WALLS. POLICY 99-08.

EXIT DEVICES:
PANIC HARDWARE SHALL COMPLY WITH CBC STANDARDS AND SHALL BE MOUNTED 36" TO 44" ABOVE FINISHED FLOOR SURFACE. THE UNLATCHING FORCE SHALL NOT EXCEED 5# APPLIED IN THE DIRECTION OF TRAVEL. PANIC HARDWARE SHALL COMPLY WITH CBC SECTION 1010.1.10. PANIC HARDWARE IS REQUIRED TO BE INSTALLED WHEN THE CONFIGURATION OF ANY ROOM PROVIDES AN OCCUPANT LOAD OF 50 OR GREATER, CBC 1010.1.10.

HARDWARE MUST ALSO COMPLY WITH SFM STANDARD 12-10-3, SECTION 12-10-302:
1. CROSS BAR FOR EXIT DEVICES SHALL EXTEND ACROSS NOT LESS THAN HALF OF THE DOOR OR GATE WIDTH.
2. ENDS OF CROSS BARS HALL BE CURVED, GUARDED OR OTHERWISE DESIGNED TO PREVENT CATCHING ON CLOTHING DURING EGRESS

HOLLOW METAL DOORS AND FRAMES:
DOORS-TYPE L FULL FLUSH INSULATED, MANUFACTURED BY 'STEELCRAFT' OR APPROVED EQUAL (UNO)FRAMES-16 GA COLD ROLLED 2" FACES (UNO)
SEE SHEET A0.3 FOR DOOR AND FRAME INFORMATION. CONTRACTOR SHALL PROVIDE ALL LABOR, MATERIALS & SERVICES TO INSTALL HOLLOW METAL DOORS AND FRAMES (UNO)

## GENERAL FINISHES:

FINISHES:
ALL FINISHES SHALL COMPLY WITH CBC CHAPTERS 7 & 8, CFC AND TITLE 19 CCR.

## FIRE PROTECTION:

FIRE EXTINGUISHER CABINETS:
FIRE EXTINGUISHER CABINETS MUST COMPLY WITH CBC SECTIONS 906, 3309 AND TITLE 19

## CASEWORK:

HANDLES:
PROVIDE U SHAPED WIRE PULLS OR EQUALLY ACCESSIBLE PULL HARDWARE AT ALL ACCESSIBLE CASEWORK PER 11B-404.2.7

## CARPET CONT:

5.504.4.4 CARPET SYSTEMS. ALL CARPET INSTALLED IN THE BUILDING SHALL MEET AT LEAST ON OF THE FOLLOWING TESTING AND PRODUCT REQUIREMENTS:

1. CARPET AND RUG INSTITUTE GREEN LABEL PLUS PROGRAM;
2. COMPLIANT WITH THE VOC-EMISSION LIMITS AND TESTING REQUIREMENTS SPECIFIED IN THE CALIFORNIA DEPARTMENT OF PUBLIC HEALTH SAFETY STANDARD METHOD FOR THE TEST AND EVALUATION OF VOLATILE ORGANIC CHEMICAL EMISSION FROM INDOOR SOURCES USING ENVIRONMENTAL CHAMBERS, VERSION 1.1, FEBRUARY 2010 (ALSO KNOWN AS CDPH STANDARD METHOD V1.1 OR SPECIFICATION 01350);
3. NSF/ANSI 140 AT THE GOLD LEVEL OR HIGHER;
4. SCIENTIFIC CERTIFICATIONS SYSTEMS SUSTAINABLE CHOICE OR;
5. COMPLIANT WITH THE COLLABORATIVE FOR HIGH PERFORMANCE SCHOOLS CALIFORNIA (CA-CHPS) CRITERIA INTERPRETATION FOR EQ 7.0 AND EQ 7.1 (FORMERLY EQ 2.2) DATED JULY 2012 AND LISTED IN THE CHPS HIGH PERFORMANCE PRODUCT DATABASE

## THERMAL:

INSULATION:
INSULATION MATERIALS, INCLUDING FACINGS, SUCH AS VAPOR RETARDERS AND VAPOR-PERMEABLE MEMBRANES INSTALLED WITHIN FLOOR-CEILING ASSEMBLIES, ROOF-CEILING ASSEMBLIES, CRAWL SPACES AND ATTICS SHALL HAVE A FLAME SPREAD INDEX NOT TO EXCEED 25 WITH AN ACCOMPANYING SMOKE-DEVELOPED INDEX NOT TO EXCEED 450 WHERE TESTED IN ACCORDANCE WITH ASTM E84 OR UL 723

## OPTION LIST - KEYNOTES

| | | | |
|---|---|---|---|
| GENERAL | [X] | ALL CASES | A0.0, A0.1, A0.2, A0.3, A0.4, A0.6, A0.7, A0.9 & A0.10 |
| DSA 103 SAMPLES | [ ] | SAMPLE DSA 103 WOOD FOUNDATION OR BUILDING STOCKPILE PROJECTS | A0.8a |
| | [ ] | SAMPLE DSA 103 CONC FOUNDATION WITH NO GEO-TECH REPORT | A0.8b |
| | [ ] | SAMPLE DSA 103 CONC FOUNDATION WITH GEO-TECH REPORT | A0.8c |
| FLOOR PLANS OPTIONS LARGER THAN 48'X60' | [ ] | EXPANDABLE FLOOR PLANS 60'X40' - 120'X40' | A0.5 |
| | [ ] | DAYLIT ZONE FLOOR PLANS 60'-120'x40' | E4.1DL |
| INTERIOR WALL OPTION | [ ] | STC CONSTRUCTION DETAILS (INTERIOR WALLS) | A0.7 |
| FLOOR PLANS | [X] | FLOOR PLAN 24'x40' | A1.1 |
| | [ ] | FLOOR PLAN 36'x40' | A1.2 |
| | [ ] | FLOOR PLAN 48'x40' | A1.3 |
| REFLECTED CEILING PLANS | [X] | REFLECTED CEILING DETAILS & DSA NOTES - ALL CASES | A2.0a & A2.0b |
| | [X] | REFLECTED CEILING PLAN 24'x40' | A2.1 |
| | [ ] | REFLECTED CEILING PLAN 36'x40' | A2.2 |
| | [ ] | REFLECTED CEILING PLAN 48'x40' | A2.3 |
| ROOF PLANS - TPO | [X] | ROOF DETAILS - TPO | A3.5 |
| | [X] | ROOF PLAN MONO & DUAL SLOPE - TPO | A3.6 |
| SOLAR READY ROOF OPTION | [X] | SOLAR READY ROOF PLANS 24'x40', 36'x40' & 48'x40' | A3.7SR |
| | [ ] | SOLAR READY ROOF PLANS 60'x40', 72'x40', & 84'x40' | A3.8SR |
| | [ ] | SOLAR READY ROOF PLANS 96'X40'. 108'X40' & 120'X40' | A3.9SR |
| | [X] | ELECTRICAL PLAN 24'x40' (WALL MOUNTED HVAC) SOLAR READY | E1.0SR |
| | [ ] | ELECTRICAL PLAN 24'x40' (ROOF MOUNTED HVAC) SOLAR READY | E1.1SR |
| | [ ] | ELECTRICAL PLAN 36'x40' (WALL MOUNTED HVAC) SOLAR READY | E2.0SR |
| | [ ] | ELECTRICAL PLAN 36'x40' (ROOF MOUNTED HVAC) SOLAR READY | E2.1SR |
| | [ ] | ELECTRICAL PLAN 48'x40' (WALL MOUNTED HVAC) SOLAR READY | E3.0SR |
| | [ ] | ELECTRICAL PLAN 48'x40' (ROOF MOUNTED HVAC) SOLAR READY | E3.1SR |
| INTERIOR ELEVATIONS | [X] | INTERIOR ELEVATIONS 24'x40' | A4.1 |
| | [ ] | INTERIOR ELEVATIONS 36'x40' | A4.2 |
| | [ ] | INTERIOR ELEVATIONS 48'x40' | A4.3 |
| EXTERIOR ELEVATIONS WOOD SIDING | [ ] | EXTERIOR ELEVATIONS 24'X40'-WOOD SIDING OPTION 'A' (RIGHT HAND) | A5.1-A |
| | [ ] | EXTERIOR ELEVATIONS 24'X40'-WOOD SIDING OPTION 'B' (~~RIGHT~~ LEFT HAND) | A5.1-B |
| | [ ] | EXTERIOR ELEVATIONS 36'x40'-WOOD SIDING | A5.2 |
| | [ ] | EXTERIOR ELEVATIONS 48'x40'-WOOD SIDING | A5.3 |
| EXTERIOR ELEVATIONS STUCCO SIDING | [ ] | EXTERIOR ELEVATIONS 24'X40'-STUCCO OPTION 'A' (RIGHT HAND) | A5.4-A |
| | [ ] | EXTERIOR ELEVATIONS 24'X40'-STUCCO OPTION 'B' (RIGHT HAND) | A5.4-B |
| | [ ] | EXTERIOR ELEVATIONS 36'x40'-STUCCO OPTION | A5.5 |
| | [ ] | EXTERIOR ELEVATIONS 48'x40'-STUCCO OPTION | A5.6 |
| WOOD STUD OPTION | [X] | ARCHITECTURAL DETAILS WOOD STUD OPTION | A8.0 |
| | [X] | WALL FRAMING DETAILS-WOOD STUD | S3.0 |
| ARCHITECTURAL DETAILS | [X] | ALL CASES | A8.1, A8.2 & A13.0 OR A14.0 |
| FIRE RATING OPTION | [ ] | FIRE RATED ASSEMBLIES | A9.0 |
| | [ ] | FIRE RATED DETAILS | A9.1 |
| SOLATUBE OPTION | [ ] | SOLATUBE OPTION AT TPO ROOF | A11.0 |
| | [ ] | SOLATUBE WIRING AND DAYLIGHT HARVESTING | E5.0 |
| RESTROOM OPTIONS | [ ] | RESTROOM ACCESSORIES SCHEDULE & DETAILS | A10.0 |
| | [ ] | RESTROOM ACCESSIBILITY DETAILS | A10.1 |
| | [ ] | 24'X40' OFFICE, JANITOR, AND DRINKING FOUNTAIN OPTIONAL PLAN | A12.0 |
| | [ ] | 24'x40' RESTROOM OPTION & ACCESSORY PLAN - ADULT AGES 13+ | A12.0A |
| | [ ] | 24'x40' RESTROOM OPTION & ACCESSORY PLAN - COMBINED AGES 5-12 | A12.0B |
| | [ ] | 24'x40' RESTROOM OPTION & ACCESSORY PLAN - COMBINED AGES 3-8 | A12.0C |
| | [ ] | 36'X40' OFFICE, JANITOR, AND DRINKING FOUNTAIN OPTIONAL PLAN | A12.1 |
| | [ ] | 36'x40' RESTROOM OPTION & ACCESSORY PLAN - ADULT AGES 13+ | A12.1A |
| | [ ] | 36'x40' RESTROOM OPTION & ACCESSORY PLAN - COMBINED AGES 5-12 | A12.1B |
| | [ ] | 36'x40' RESTROOM OPTION & ACCESSORY PLAN - COMBINED AGES 3-8 | A12.1C |
| | [ ] | 48'X40' OFFICE, JANITOR, AND DRINKING FOUNTAIN OPTIONAL PLAN | A12.2 |
| | [ ] | 48'x40' RESTROOM OPTION & ACCESSORY PLAN - ADULT AGES 13+ | A12.2A |
| | [ ] | 48'x40' RESTROOM OPTION & ACCESSORY PLAN - COMBINED AGES 5-12 | A12.2B |
| | [ ] | 48'x40' RESTROOM OPTION & ACCESSORY PLAN - COMBINED AGES 3-8 | A12.2C |
| | [ ] | PLUMBING SCHEDULE AND DETAILS | P0.0 & P6.0 |
| | [ ] | PLUMBING PLAN 24'x40' | P1.0 |
| | [ ] | PLUMBING PLAN 24'x40'- ADULT AGES 13+ | P1.0A |
| | [ ] | PLUMBING PLAN 24'x40' - COMBINED AGES 5-12 | P1.0B |
| | [ ] | PLUMBING PLAN 24'x40' - COMBINED AGES 3-8 | P1.0C |
| | [ ] | PLUMBING PLAN 36'x40' | P2.0 |
| | [ ] | PLUMBING PLAN 36'x40'- ADULT AGES 13+ | P2.0A |
| | [ ] | PLUMBING PLAN 36'x40' - COMBINED AGES 5-12 | P2.0B |
| | [ ] | PLUMBING PLAN 36'x40' - COMBINED AGES 3-8 | P2.0C |
| | [ ] | PLUMBING PLAN 48'x40' | P3.0 |
| | [ ] | PLUMBING PLAN 48'x40'- ADULT AGES 13+ | P3.0A |
| | [ ] | PLUMBING PLAN 48'x40' - COMBINED AGES 5-12 | P3.0B |
| | [ ] | PLUMBING PLAN 48'x40' - COMBINED AGES 3-8 | P3.0C |
| FOUNDATION OPTION WOOD PAD | [ ] | WOOD PAD FOUNDATION PLAN-PLYWOOD FLOOR-24'x40' | F1.1 |
| | [ ] | WOOD PAD FOUNDATION PLAN-PLYWOOD FLOOR-36'x40' | F1.2 |
| | [ ] | WOOD PAD FOUNDATION DETAILS | F1.8 |
| FOUNDATION OPTION CONCRETE | [ ] | ABOVE GRADE CONCRETE FOUNDATION DETAILS | F2.0 |
| | [ ] | ABOVE GRADE CONCRETE FOUNDATION PLAN | F2.1 |
| | [ ] | FLUSH TO GRADE CONCRETE FOUNDATION DETAILS | F3.0 |
| | [ ] | FLUSH TO GRADE CONCRETE FOUNDATION PLAN | F3.1 |
| | [ ] | GENERAL DETAILS | F4.0 |
| OVER 2160 SF BELOW GRADE REQUIREMENTS | [ ] | DETERIORATION PROTECTION FOR BELOW GRADE CONDITION (WOOD SIDING) | A20.0 |
| | [ ] | DETERIORATION PROTECTION FOR BELOW GRADE CONDITION (STUCCO SIDING) | A20.1 |
| STRUCTURAL | [X] | ALL CASES | S0.0a, S0.0b, S0.3, S1.0, S2.0, S3.2 & S4.0 |
| PLYWOOD FLOOR OPTION | [X] | STRUCTURAL BUILDING SECTIONS PLYWOOD FLOOR MONO SLOPE | S0.1a |
| | [ ] | STRUCTURAL BUILDING SECTIONS PLYWOOD FLOOR DUAL SLOPE | S0.1b |
| | [X] | FLOOR FRAMING PLAN-PLYWOOD | S1.1 |
| CONCRETE FLOOR OPTION | [X] | STRUCTURAL BUILDING SECTIONS CONCRETE FLOOR MONO SLOPE | S0.2a |
| | [ ] | STRUCTURAL BUILDING SECTIONS CONCRETE FLOOR DUAL SLOPE | S0.2b |
| | [ ] | FLOOR FRAMING PLAN-CONCRETE | S1.2 |
| ROOF TRUSS OPTION | [ ] | ROOF TRUSS AND DETAILS | S2.1 |
| MECHANICAL | [X] | ALL CASES | M0.0, M0.1, M3.0,M3.1, M3.2, M3.3, M3.4 & M5.0 |
| MECHANICAL PLANS WALL MOUNT OPTION | [X] | MECHANICAL PLAN WALL MOUNT 24'x40' | M1.1 |
| | [ ] | MECHANICAL PLAN WALL MOUNT 36'x40' | M1.2 |
| | [ ] | MECHANICAL PLAN WALL MOUNT 48'x40' | M1.3 |
| MECHANICAL PLANS ROOF MOUNT OPTION | [ ] | MECHANICAL PLAN ROOF MOUNT 24'x40' | M2.1 |
| | [ ] | MECHANICAL ROOF PLAN 24'x40' | M2.2 |
| | [ ] | MECHANICAL PLAN ROOF MOUNT 36'x40' | M2.3 |
| | [ ] | MECHANICAL ROOF PLAN 36'x40' | M2.4 |
| | [ ] | MECHANICAL PLAN ROOF MOUNT 48'x40' | M2.5 |
| | [ ] | MECHANICAL ROOF PLAN 48'x40' | M2.6 |
| ELECTRICAL | [X] | ALL CASES | E0.0, E6.0, E7.0, E7.1, E7.2 & E8.0 |
| ELECTRICAL PLANS WALL MOUNT OPTION | [X] | ELECTRICAL PLAN 24'x40' (WALL MOUNTED HVAC) | E1.0 & E4.0DL |
| | [ ] | ELECTRICAL PLAN 36'x40' (WALL MOUNTED HVAC) | E2.0 & E4.0DL |
| | [ ] | ELECTRICAL PLAN 48'x40' (WALL MOUNTED HVAC) | E3.0 & E4.0DL |
| ELECTRICAL PLANS ROOF MOUNT OPTION | [ ] | ELECTRICAL PLAN 24'x40' (ROOF MOUNTED HVAC) | E1.1 & E4.0DL |
| | [ ] | ELECTRICAL PLAN 36'x40' (ROOF MOUNTED HVAC) | E2.1 & E4.0DL |
| | [ ] | ELECTRICAL PLAN 48'x40' (ROOF MOUNTED HVAC) | E3.1 & E4.0DL |

### FLOOR FRAMING: (CHECK ONE)

FLOOR LIVE LOAD: SEE COVER SHEET
FLOOR BEAM SIZE: SEE STRUCTURAL
JOIST TYPE: SEE STRUCTURAL SHEETS
JOIST SPACING: SEE STRUCTURAL SHEETS
* INSULATION: R-19 UNFACED FIBERGLASS BATT
BOTTOM ENCLOSURE: CANVEX CW-600 OR MIN 6 MIL HEAVY DUTY PLASTIC
FLOOR DECK: PLYWOOD DECKING [X] LIGHTWEIGHT CONCRETE [ ]
REFERENCE: FLOOR FRAMING SHEETS
MISC: PLYWOOD FLOOR OR CONCRETE FLOORS SHALL HAVE MIN R-19 UNFACED FIBERGLASS BATT UNO PROJECT SPECIFIC ENERGY REPORT

### ROOF FRAMING: (CHECK ONE)

ROOF LIVE LOAD: SEE COVER SHEET
ROOF SLOPE: DUAL SLOPE [ ] MONO SLOPE [X]
JOIST SIZE & GRADE: SEE STRUCTURAL SHEETS
* INSULATION: R-38 UNFACED AT ATTIC SIDE + 3" RIGID INSULATION AT EXT SIDE
FINISH ROOFING: 45 MIL TPO W/ 1/4" DENSDECK [ ] 60 MIL TPO W/ 1/4" DENSDECK [X]
80 MIL TPO W/ 1/4" DENSDECK [ ]
ROOF SHEATHING: MIN 7/16" CDX PLYWOOD
FRONT OVERHANG: NO [ ] YES [X]
REAR OVERHANG: NO [ ] YES [X]
OVERHANG MEMBER: ANGLE [ ] C-CHANNEL [X]
SOFFITS: OPEN SOFFITS [ ] CLOSED SOFFITS [X]
DRAINAGE SYSTEM: 26 GA GUTTERS & DOWNSPOUTS
REFERENCE: ROOF FRAMING SHEETS
NOTE: SOFFIT FINISH TO MATCH WALL FINISH

### EXTERIOR WALLS WOOD STUD OPTION:

WIND LOAD: SEE COVER SHEET
STUD SIZE: 2"x6" UNO BY WALL LEGEND ON COVER SHEET/FLR PLAN
SPACING: SEE CHART ON WALL FRAMING ELEVATIONS
GRADE: SEE CHART ON WALL FRAMING ELEVATIONS
INSULATION: R-21 UNFACED FIBERGLASS BATT
FIRE RESISTIVE CONSTRUCTION: NO [X] YES [ ] (SEE FIRE RATED DETAIL SHEETS)
REFERENCE: WALL FRAMING ELEVATIONS
MISC: ALL EXTERIOR WALLS SHALL HAVE MIN R-21 UNFACED FIBERGLASS BATT UNO ON PROJECT SPECIFIC ENERGY REPORT

### NON-BEARING INTERIOR WALLS: (CHECK ONE)

STUD SIZE 2"x4" UNO BY WALL LEGEND ON COVER SHEET/FLR PLAN
SPACING: 16" OC
GRADE: HEMLOCK FIR MIN
PARTITION HEIGHT: TO RAFTERS [X] BELOW RAFTERS [ ]
INSULATION: R-13 UNFACED [X] R-19 UNFACED [ ]
FIRE RESISTIVE CONSTRUCTION: NO [X] YES [ ] (SEE FIRE RATED DETAIL SHEETS)
REFERENCE: WALL FRAMING DETAILS
NOTES: INTERIOR WALLS SEPARATING TENANT SPACE OR PUBLIC AREAS REQUIRE A SOUND OF STC 40 PER ENERGY CODE SECTION 5.507.4.3.
SEE DETAILS #A,B/A0.7

### PLUMBING: (CHECK ONE)

ABS SCHEDULE 40 WASTE [ ] PVC SCHEDULE 40 DWV PIPE [ ]
CAST IRON WASTE [ ]
REFERENCE: PLUMBING SHEETS
NOTES: ALL PLUMBING WASTE VENTS SHALL BE 10'-0" MINIMUM AWAY FROM ANY FRESH INTAKE EQUIPMENT

### SITE CONDITIONS: (CHECK ONE) (NOT PART OF THIS APPLICATION)

FOUNDATION TYPE: WOOD PAD (CONDITIONAL UP TO 48'x40') [ ] CONCRETE ABOVE GRADE [ ]
CONC BELOW GRADE (CONDITIONAL UP TO 48'X40') [ ]
CONC BELOW GRADE (60' THRU 120'X60') SEE NOTE BELOW [ ]

*THIS PC (OR BLDG) DESIGN USES AN ALTERNATE MEANS OF COMPLIANCE FOR FOUNDATION DURABILITY REQUIREMENTS PER CBC SECTIONS 1402.2 AND 1403.2 FOR PROVIDING A WEATHER-RESISTANT EXTERIOR WALL ENVELOPE AND CONTINUOUS WATER-RESISTIVE BARRIER ON WALLS DOWN TOP TOP OF FOUNDATION WALL, AND CBC SECTION 2304.12.1.2 FOR PROTECTION AGAINST DECAY AND TERMITES ALONG ADJACENT EXTERIOR GRADE, AS WELL AS PROTECTION AGAINST STEEL DETERIORATION PER CBC 2203A. THIS ONLY APPLIES TO BELOW-GRADE FOUNDATIONS 2160 SF AND OVER. REFER TO SHEET A20.0 & A20.1 FOR DETAILS*

REFERENCE: FOUNDATION SHEETS
RAMP & LANDING: NO [ ] YES [ ] (SEE RAMP/LANDING PC PLAN)
RAMP & LANDING SURFACE FINISH: SEE RAMP AND LANDING SHEETS

### AC UNIT TYPE: (CHECK ONE)

WALL MOUNT [X] ROOF MOUNT [ ]
ROOF MOUNT CONDENSATE LINE: COPPER [ ] PVC [ ]
NOTES: INSULATE CONDENSATE LINES PER CMC 1106.9

### EXTERIOR WALL FINISH: (CHECK ONE)

5/8" (19/32) SIDING (GROOVED AT 8" OC). IF BLDG IS OVER 2160 SF SEE SHEET A20.0 [X]
STUCCO ON-SITE. IF BLDG IS OVER 2160 SF SEE SHEET A20.1 [ ]
REFERENCE: ARCHITECTURAL DETAIL SHEETS
NOTES: SEE NOTE ON COVER SHEET REGARDING FOUNDATION DURABILITY FOR BUILDINGS 2160 SF AND OVER

* = COORDINATE WITH SHEET M5.0 FOR WORST CASE SCENARIO CHART WHEN WORST CASE MATERIALS ARE USED OR PROJECT SPECIFIC ENERGY REPORT ON SHEETS M3.0, M3.1, M3.2 AND M3.3

STATE AGENCY APPROVAL

IDENTIFICATION STAMP
DIV. OF THE STATE ARCHITECT
APP. 04-124098 INC:
REVIEWED FOR
SS ☑ FLS ☑ ACS ☑
DATE: 11/14/24

SKC COMPANY
15345 FAIRFIELD RANCH ROAD, SUITE #160, CHINO, CA 91709
OFFICE: (909) 740-3120, FAX: (909) 726-9470
WEBSITE: WWW.SKCCOMPANY.COM
MANUFACTURER #MF1279666 DEALER # DL1279666
GC LIC # 992118 SBE CERTIFIED

ALL DESIGNS INDICATED ON THESE PLANS/DRAWINGS ARE PROPERTY OF SKC, INC AND ARE FOR THE USE BY SKC IN THE SPECIFIED JOB ONLY. THEY SHALL NOT BE USED AND/OR DUPLICATED OR TRANSMITTED IN ANY FORM, FOR ANY PURPOSE WITHOUT THE PRIOR WRITTEN CONSENT OF SKC, INC. ANY UNAUTHORIZED USE OF THESE PLANS SHALL SUBJECT THE OWNER OF SAID PROPERTY TO LIQUIDATED DAMAGES OF $75,000.00. THESE PLANS ARE PROTECTED UNDER THE PROVISIONS OF THE 1976 COPYRIGHT ACT COPYRIGHT SKC, © ALL RIGHTS RESERVED.

DISTRICT/CUSTOMER NAME: NEXTMOD

SCHOOL/SITE NAME: STOCKPILE

SHEET TITLE:
CONSTRUCTION MATERIALS AND SPECIFICATIONS

PRE-CHECK (PC) DOCUMENT
CODE: 2022 CBC
A SEPARATE PROJECT APPLICATION FOR CONSTRUCTION IS REQUIRED

APPROVED
DIV. OF THE STATE ARCHITECT
APP: 04-122454 PC
REVIEWED FOR
SS ☑ FLS ☑ ACS ☑ CG ☑
DATE: 11/14/2023

PROFESSIONAL OF RECORD ON PC

ORION
Structural Engineering, Inc.
11305 RANCHO BERNARDO RD SUITE 121
SAN DIEGO CA. 92127
PHONE (858) 679-1974

REGISTERED PROFESSIONAL ENGINEER RYAN J. OVER No. S 4437 EXP. 12/31/24 STRUCTURAL STATE OF CALIFORNIA

FIRM: Orion Structural Engineering, Inc.
ADDRESS: 11305 Rancho Bernardo Road Ste 121
CITY: San Diego, CA
PHONE: 858-679-1974

PROJECT SPECIFIC PROFESSIONAL OF RECORD

FIRM:
ADDRESS:
CITY:
PHONE:

REVISIONS

1 -
2 -
3 -
4 -
5 -

| | |
|---|---|
| PROJECT NO.: | 00-0000 |
| DRAFTER: | 00 |
| SCALE: | AS NOTED |
| DATE: | 00-00-00 |

SHEET NUMBER

# A0.2

10/31/2023 11:41:57 AM

## HARDWARE GROUP (EXT ENTRY) 1

| QTY. | ITEM | DESCRIPTION |
|---|---|---|
| 1 | LOCK SET | 'SCHLAGE': ND75PD RHODES LEVER 626 |
| 1 | KEYING | SCHLAGE "C" KEYWAY |
| 3 | HINGES | 'HAGER': BB1191 4.5"x4.5" NRP US32D |
| 1 | CLOSER | 'NORTON': 8301 SLIM COVER (5 LB OPERATING PUSH/PULL PRESSURE) |
| 1 | THRESHOLD | 'HAGER': 413S MIL 36" |
| 1 | DOOR BOTTOM | 'HAGER': 783S MIL 36" |
| 1 | WEATHER-STRIP | 'HAGER': 891S MIL 36"x84" |
| 1 | KICK PLATE | 'HAGER': 190S 10"x34" US32D |
| 1 | DOOR STOP | 'HAGER': 243F FLOOR STOP US26D (LOCATED 4" FROM WALL) |

## HARDWARE GROUP (EXT PANIC) 2

NOT USED

| QTY. | ITEM | DESCRIPTION |
|---|---|---|
| 1 | LOCK SET * | 'VON DUPRIN': PUSH BAR AX-PA-CD-99-X-L-X-X-626 EXIT DEVICE |
| 1 | EXTERIOR TRIM | 'VON DUPRIN': LEVER HANDLE 996L TRIM |
| 1 | KEYING | SCHLAGE "C" KEYWAY |
| 3 | HINGES | 'HAGER': BB1191 4.5"x4.5" NRP US32D |
| 1 | CLOSER | 'NORTON': 8301 SLIM COVER (5 LB OPERATING PUSH/PULL PRESSURE) |
| 1 | THRESHOLD | 'HAGER': 413S MIL 36" |
| 1 | DOOR BOTTOM | 'HAGER': 783S MIL 36" |
| 1 | WEATHER-STRIP | 'HAGER': 891S MIL 36"x84" |
| 1 | KICK PLATE | 'HAGER': 190S 10"x34" US32D |
| 1 | DOOR STOP | 'HAGER': 243F FLOOR STOP US26D (LOCATED 4" FROM WALL) |

## HARDWARE GROUP (INT PRIVACY) 3

NOT USED

| QTY. | ITEM | DESCRIPTION |
|---|---|---|
| 1 | LOCK SET | 'SCHLAGE': ND40S RHODES LEVER 626 |
| 3 | HINGES | 'HAGER': RC1749 4"x4" US26D |

## HARDWARE GROUP (INT OFFICE) 4

NOT USED

| QTY. | ITEM | DESCRIPTION |
|---|---|---|
| 1 | LOCK SET | 'SCHLAGE': ND53PD RHODES LEVER 626 |
| 1 | KEYING | SCHLAGE "C" KEYWAY |
| 3 | HINGES | 'HAGER': RC1749 4"x4" US26D |

## HARDWARE GROUP (INT PASSAGE) 5

NOT USED

| QTY. | ITEM | DESCRIPTION |
|---|---|---|
| 1 | LOCK SET | 'SCHALGE': ND10S RHODES LEVER 626 |
| 3 | HINGES | 'HAGER': RC1749 4"x4" US26D |

## HARDWARE GROUP (INT STORAGE) 6

NOT USED

| QTY. | ITEM | DESCRIPTION |
|---|---|---|
| 1 | LOCK SET | 'SCHLAGE': ND80PD RHODES LEVER 626 |
| 1 | KEYING | SCHLAGE "C" KEYWAY |
| 3 | HINGES | 'HAGER': RC1749 4"x4" US26D |

## DOOR SCHEDULE

| # | DOOR TYPE | DOOR WIDTH | DOOR HEIGHT | HARDWARE GROUP | DOOR MATERIAL | DOOR GAUGE | DOOR FRAME | FRAME GAUGE | GLAZING | FIRE RATING | SECURITY HARDWARE | DOOR TYPE | REMARKS |
|---|---|---|---|---|---|---|---|---|---|---|---|---|---|
| 100 | A | 3'-0" | 7'-0" | 1 | STL | 18 | KD | 16 | - | - | YES | MANUFACTURED | - |
| ~~200A~~ | ~~A~~ | ~~3'-0"~~ | ~~7'-0"~~ | ~~2~~ | ~~STL~~ | ~~18~~ | ~~KD~~ | ~~16~~ | - | - | ~~YES~~ | ~~MANUFACTURED~~ | - |
| ~~200B~~ | ~~A~~ | ~~3'-0"~~ | ~~7'-0"~~ | ~~2~~ | ~~STL~~ | ~~18~~ | ~~KD~~ | ~~16~~ | - | - | ~~YES~~ | ~~MANUFACTURED~~ | - |
| ~~300~~ | ~~A~~ | ~~3'-0"~~ | ~~7'-0"~~ | ~~2~~ | ~~STL~~ | ~~18~~ | ~~KD~~ | ~~16~~ | - | - | ~~YES~~ | ~~MANUFACTURED~~ | - |
| ~~300A~~ | ~~A~~ | ~~3'-0"~~ | ~~7'-0"~~ | ~~5~~ | ~~SCL~~ | - | ~~TM~~ | - | - | - | ~~NO~~ | ~~MANUFACTURED~~ | - |
| ~~301~~ | ~~A~~ | ~~3'-0"~~ | ~~7'-0"~~ | ~~2~~ | ~~STL~~ | ~~18~~ | ~~KD~~ | ~~16~~ | - | - | ~~YES~~ | ~~MANUFACTURED~~ | - |
| | | | | | | | | | | | | | |
| | | | | | | | | | | | | | |
| OPTIONAL DOOR SCHEDULE | | | | | | | | | NOTE: REFER TO OPTION PLANS A12.0, A12.0A, A12.0B, A12.0C, A12.1, A12.1A, A12.1B, A12.1C, A12.2, A12.2A, A12.2B, & A12.2C FOR LOCATION OF DOORS | | | | |
| 101 | A | 3'-0" | 7'-0" | 3 | SCL | - | TM | - | - | - | NO | MANUFACTURED | - |
| 102 | A | 3'-0" | 7'-0" | 4 | SCL | - | TM | - | - | - | NO | MANUFACTURED | - |
| 103 | A | 3'-0" | 7'-0" | 5 | SCL | - | TM | - | - | - | NO | MANUFACTURED | - |
| 104 | A | 3'-0" | 7'-0" | 6 | SCL | - | TM | - | - | - | NO | MANUFACTURED | - |
| 105 | C | 3'-0" | 7'-0" | 5 | SCL | - | TM | - | - | - | NO | MANUFACTURED | |
| 400 | A OR B | 3'-0" | 7'-0" | 3 | STL | 18 | WF | 16 | - | - | YES | MANUFACTURED | - |
| 500 | D | (2) 3'-0" | 7'-0" | 2 | STL | 18 | WF | 16 | - | - | YES | MANUFACTURED | DOUBLE DOOR |
| 600 | E | 3'-0" | 7'-0" | 1 | STL | 18 | WF | 16 | YES | - | YES | MANUFACTURED | SEE GLAZING SIZE BELOW |

NOTES:
1. ALL EXIT DOORS SHALL BE OPENABLE FROM THE INSIDE WITHOUT THE USE OF SPECIAL TOOLS, KNOWLEDGE OR EFFORT

### DOOR MATERIAL LEGEND
STL: STEEL DOOR-HOLLOW CORE
SCW: SOLID CORE WOOD
SCL: SOLID CORE WOOD LEGACY
HCW: HOLLOW CORE WOOD
SF: STORE FRONT

### DOOR FRAME LEGEND
WF: WELDED FRAMING-HOLLOW METAL
TM: TIMELY METAL
KD: KNOCK DOWN-HOLLOW METAL
SF: STORE FRONT

### * PANIC HARDWARE NOTE
CYLINDER DOGGING REQUIRED AT K-12 SCHOOLS ONLY. HEX KEY DOGGING ONLY PERMITTED AT COMMUNITY COLLEGES

NOTE:
2022 CBC 1010.2.8 -1010.2.8 LOCKING ARRANGEMENTS IN EDUCATIONAL OCCUPANCIES IN GROUP E OCCUPANCIES, GROUP B EDUCATIONAL OCCUPANCIES AND GROUP I-4 OCCUPANCIES, EGRESS DOORS FROM CLASSROOMS, OFFICES AND OTHER OCCUPIED ROOMS WITH LOCKING ARRANGEMENTS DESIGNED TO KEEP INTRUDERS FROM ENTERING THE ROOM SHALL COMPLY WITH ALL OF THE FOLLOWING CONDITIONS:

1. THE DOOR SHALL BE CAPABLE OF BEING UNLOCKED FROM OUTSIDE THE ROOM WITH A KEY OR OTHER APPROVED MEANS.
2. THE DOOR SHALL BE OPENABLE FROM WITHIN THE ROOM IN ACCORDANCE WITH SECTION 1010.2.
3. MODIFICATIONS SHALL NOT BE MADE TO LISTED PANIC HARDWARE, FIRE DOOR HARDWARE OR DOOR CLOSERS.
4. MODIFICATIONS TO FIRE DOOR ASSEMBLIES SHALL BE IN ACCORDANCE WITH NFPA 80.

REMOTE LOCKING OR UNLOCKING OF DOORS FROM AN APPROVED LOCATION SHALL BE PERMITTED IN ADDITION TO THE UNLOCKING OPERATION IN ITEM 1.

### EXT METAL DOOR NOTES:
1. NON INSULATED SORS AHALL HAVEA U FACTOR NOT TO EXCEED 0.70 MAX
2. INSULATED DOOR SHALL HAVE A U-FACTOR NOT TO EXCEED 0.50 MAX

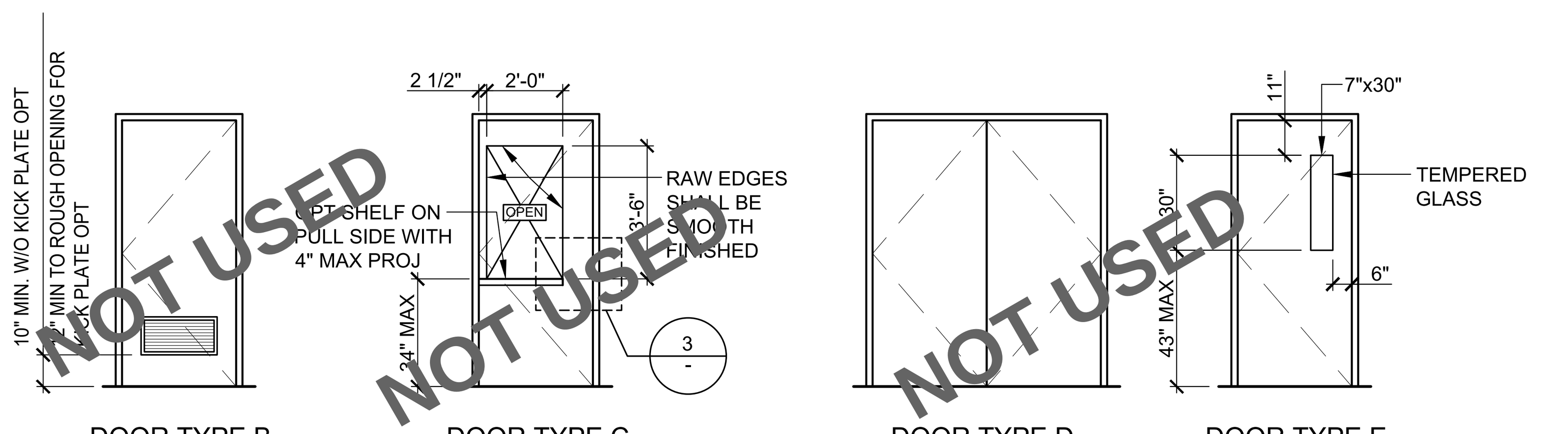


DOOR TYPE B — DOOR TYPE C — DOOR TYPE D — DOOR TYPE E

### OPTIONAL DOOR TYPES

### EXT METAL DOOR NOTES:
1. ~~NON-INSULATED DOORS SHALL HAVE A U-FACTOR NOT TO EXCEED 0.70 MAX~~
2. ~~INSULATED DOORS SHALL HAVE A U-FACTOR NOT TO EXCEED 0.50 MAX~~

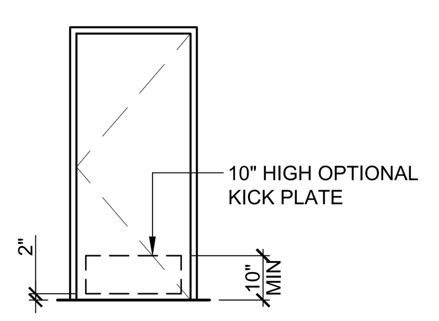


DOOR TYPE A

### STANDARD DOOR TYPE

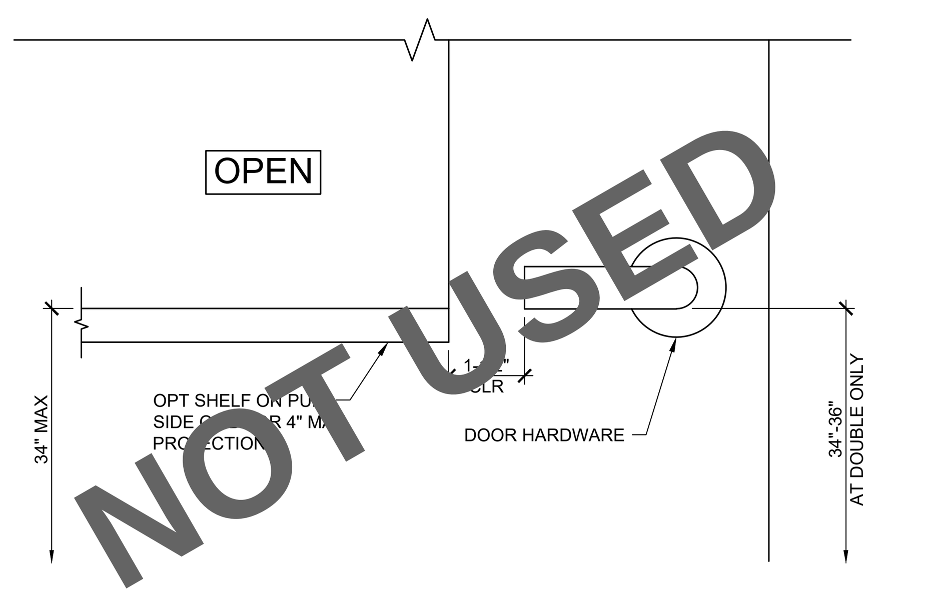


### DOOR VISION OPENING (W/ OPT SHELF)
SCALE: 3" = 1'-0"

3

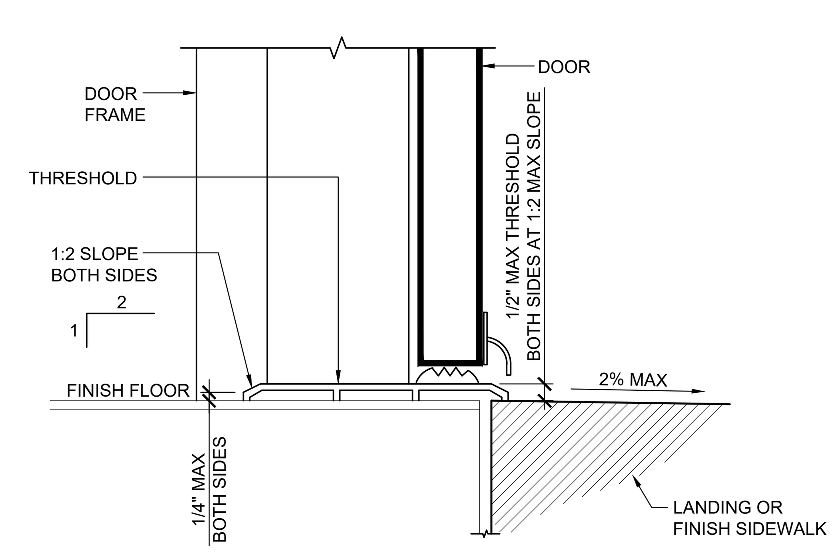


### ACCESSIBLE THRESHOLD
SCALE: 3" = 1'-0"

1

## ROOM FINISH SCHEDULE

| ROOM NUMBER | ROOM NAME | FLOOR FINISH | BASE | WALLS ELEV. 1 | WALLS ELEV. 2 | WALLS ELEV. 3 | WALLS ELEV. 4 | CEILING FINISH | HEIGHT CEILING | REMARKS |
|---|---|---|---|---|---|---|---|---|---|---|
| 100 | CLASSROOM | CPT | 4TB | VT | VT | VT | VT | AT | 8'-6" | 5'X5' VCT/FLAT SV AT ENTRY |
| ~~200~~ | ~~CLASSROOM~~ | ~~CPT~~ | ~~4TB~~ | ~~VT~~ | ~~VT~~ | ~~VT~~ | ~~VT~~ | ~~AT~~ | ~~8'-6"~~ | ~~5'X5' VCT/FLAT SV AT ENTRY~~ |
| ~~300~~ | ~~CLASSROOM~~ | ~~CPT~~ | ~~4TB~~ | ~~VT~~ | ~~VT~~ | ~~VT~~ | ~~VT~~ | ~~AT~~ | ~~8'-6"~~ | ~~5'X5' VCT/FLAT SV AT ENTRY~~ |
| ~~301~~ | ~~CLASSROOM~~ | ~~CPT~~ | ~~4TB~~ | ~~VT~~ | ~~VT~~ | ~~VT~~ | ~~VT~~ | ~~AT~~ | ~~8'-6"~~ | ~~5'X5' VCT/FLAT SV AT ENTRY~~ |
| | | | | | | | | | | |
| | | | | | | | | | | |
| | | | | | | | | | | |
| | | | | | | | | | | |
| OPTIONAL ROOM FINISH SCHEDULES | | | | | | | | | | |
| 102, 202 304, 305 | OFFICE | CPT | 4TB | VT | VT | VT | VT | AT | 8'-6" | - |
| ~~101~~ | ~~RR/JANITOR~~ | ~~SV~~ | ~~6SC~~ | ~~FRP~~ | ~~FRP~~ | ~~FRP~~ | ~~FRP~~ | ~~AT~~ | ~~8'-0"~~ | ~~WASHABLE CEILING TILES~~ |
| ~~201~~ | ~~RR/JANITOR~~ | ~~SV~~ | ~~6SC~~ | ~~FRP~~ | ~~FRP~~ | ~~FRP~~ | ~~FRP~~ | ~~AT~~ | ~~8'-0"~~ | ~~WASHABLE CEILING TILES~~ |
| ~~302~~ | ~~RR/JANITOR~~ | ~~SV~~ | ~~6SC~~ | ~~FRP~~ | ~~FRP~~ | ~~FRP~~ | ~~FRP~~ | ~~AT~~ | ~~8'-0"~~ | ~~WASHABLE CEILING TILES~~ |
| ~~303~~ | ~~RR/JANITOR~~ | ~~SV~~ | ~~6SC~~ | ~~FRP~~ | ~~FRP~~ | ~~FRP~~ | ~~FRP~~ | ~~AT~~ | ~~8'-0"~~ | ~~WASHABLE CEILING TILES~~ |

NOTES:
1. FINISHES BY OWNER SHALL COMPLY WITH SPECIFICATION ON SHEET A0.2
2. ALL FINISHES SHALL COMPLY WITH CBC, CFC & TITLE 19

### FLOOR FINISH LEGEND
CPT: CARPET FLOORING
SV: SHEET VINYL FLOORING
VCT: VINYL COMPOSITION TILE
4TB: 4" TOP SET BASE
6TB: 6" TOP SET BASE
6SC: 6" SELF COVE BASE
BO: BY OWNER

### WALL FINISH LEGEND: (CHECK BOX WHERE APPLICABLE)
VT: 1/2" VINYL TACK BOARD OVER:
1/2" GYP BOARD [X]
~~OPTIONAL 5/8" GYP BOARD [ ]~~
~~NOTE: USE TYPE 'X' GYP BOARD WHERE CALL FOR. USE MOISTURE RESISTANT GYP BOARD BEHIND CLASSROOM SINKS~~

NOT USED

FRP: 1/8" FIBERBOARD REINFORCED PANELS OVER:
1/2" MOISTURE RESISTANT GYP BOARD [ ]
OPTIONAL 5/8" MOISTURE RESISTANT GYP BOARD [ ]

PGYP: 1/2" GYP BOARD TAPE/TEXTURED/PAINTED [ ]
OPTIONAL 5/8" GYP BOARD TAPE/TEXTURED/PAINTED [ ]
NOTE: USE TYPE 'X' GYP BOARD WHERE CALL FOR. USE MOISTURE RESISTANT GYP BOARD BEHIND CLASSROOM SINKS AND/OR WET AREAS

### CEILING FINISH LEGEND: (CHECK BOX WHERE APPLICABLE)
AT: ACOUSTICAL TILE IN HEAVY DUTY T-BAR GRID

~~HL: 1/2" GYP BOARD TAPE/TEXTURED/PAINTED [ ]~~
~~5/8" GYP BOARD TAPE/TEXTURED/PAINTED [ ]~~

FIRE CLASSIFICATION FOR CEILING:

SUSPENDED T-BAR SYSTEM:
PERFORMANCE RATED ASTM C-635 HEAVY DUTY FLAME SPREAD MAX 0-25, SMOKE DEVELOP MAX 450.

ACOUSTIC LAY-IN CEILING PANELS:
LIGHT REFLECTIVE LR-1, FIRE RATED CLASS-A PER ASTM E-84. VINYL FACED FIBERGLASS, 5/8" THICK, ARMSTRONG OR EQUIV. CLASS A: FLAME SPREAD 25 (UL LABELED) PER ASTM E-1264. SMOKE DEVELOP MAX 450

### WINDOW FRAME LEGEND
AL: ALUMINUM
HM: HOLLOW METAL
V: VINYL

### WINDOW FINISHES
CA: CLEAR ANODIZED
BA: BRONZE ANODIZED
PNT: PAINTED
MF: MANUFACTURER FINISH

### GLAZING TYPES
1: 46% TEMPERED GRAYLITE
2: 14% TEMPERED GRAYLITE
3: CLEAR TEMPERED
4: DUAL PANE
5: SINGLE PANE

### GLAZING NOTE
1. GLAZING U-FACTOR SHALL NOT EXCEED 0.79 MAX
2. SHGC SHALL BE 0.59 MAX
3. VISIBLE TRANSMITTANCE SHALL NOT EXCEED 0.67 MAX

### STC RATING EXTERIOR WINDOWS
[ ] MIN STC 40 RATING

## WINDOW SCHEDULE

| * | WINDOW WIDTH | WINDOW HEIGHT | WINDOW FRAME | WINDOW FINISH | WINDOW GLAZING | FIRE RATING | WINDOW TYPE | REMARKS |
|---|---|---|---|---|---|---|---|---|
| A | 8'-0" | 4'-0" | AL | CA | 1&4 | - | MANUFACTURED | SCREENED |
| | | | | | | | | |
| | | | | | | | | |
| | | | | | | | | |
| | | | | | | | | |
| | | | | | | | | |
| OPTIONAL WINDOWS | | | | | | | | |
| ~~B~~ | ~~6'-0"~~ | ~~4'-0"~~ | ~~AL~~ | ~~CA~~ | ~~1&4~~ | - | ~~MANUFACTURED~~ | ~~SCREENED~~ |
| ~~C~~ | ~~4'-0"~~ | ~~4'-0"~~ | ~~AL~~ | ~~CA~~ | ~~1&4~~ | - | ~~MANUFACTURED~~ | ~~SCREENED~~ |
| ~~D~~ | ~~8'-0"~~ | ~~2'-0"~~ | ~~AL~~ | ~~CA~~ | ~~1&4~~ | - | ~~MANUFACTURED~~ | ~~SCREENED~~ |

NOTE:
1. OPERATION OF WINDOW AND HARDWARE SHALL NOT REQUIRE MORE THAN 5 LBS MAX FORCE
2. ALL GLAZE SHALL BE LABELED PER CBC CHAPTER 24 FOR IDENTIFICATION OF GLASS AND SAFETY GLAZING
3. WHEN FIRE RATING FOR OPENINGS ARE APPLICABLE, THEY SHALL COMPLY WITH CBC SECTION 716
4. TEMPORARY NFRC LABELS STAY ON THE FENESTRATION PRODUCTS UNTIL THE INSPECTOR HAS VERIFIED THAT THE INSTALLED U-FACTOR, SHGC, AND VT MATCH THE WINDOW SCHEDULE

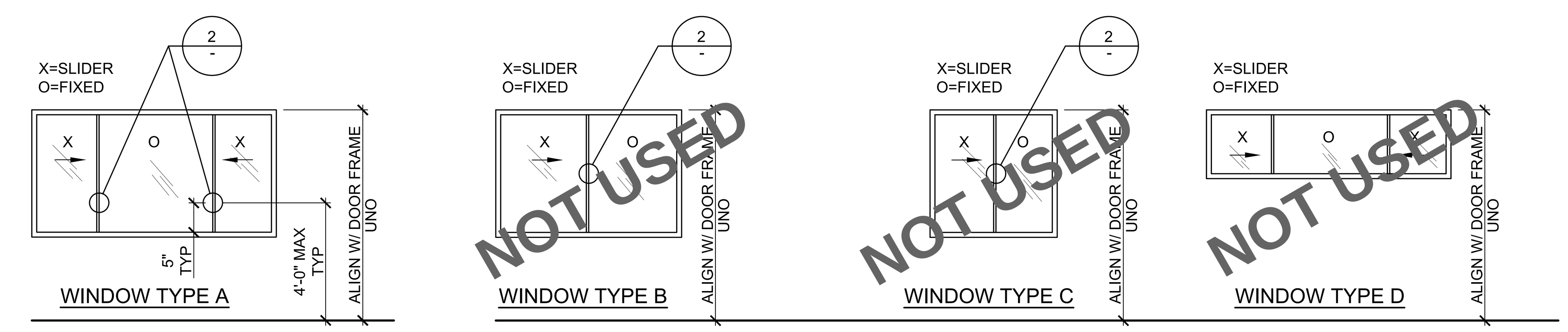


WINDOW TYPE A — WINDOW TYPE B — WINDOW TYPE C — WINDOW TYPE D

### STANDARD WINDOW TYPE

### OPTIONAL WINDOW TYPE

## OPTIONAL SOLATUBE CEILING LENS SCHEDULE

NOT USED

| LENS PREFIX | LENS WIDTH | LENS LENGTH | LENS STYLE | LENS GLAZING | LENS TYPE | REMARKS |
|---|---|---|---|---|---|---|
| L2 | 23.8" | 23.8" | PRISMATIC | 1 | MANUFACTURED | SEE SHEET A11.0 |
| L5 | 23.8" | 23.8" | WIDE | 2 | MANUFACTURED | SEE SHEET A11.0 |
| L6 | 23.8" | 23.8" | SUPER[illegible]DE | | MANUFACTURED | SEE SHEET A11.0 |
| L7 | 23.8" | 23.8" | NARR[illegible]W | 2 | MANUFACTURED | SEE SHEET A11.0 |
| | | | | | | |
| | | | | | | |

### GLAZING NOTE
1. VISIBLE TRANSMITTANCE SHALL BE GREATER THAN 90% AT 0.1 INCH THICK
2. VISIBLE TRANSMITTANCE SHALL BE GREATER THAN 90% AT 0.022 INCH THICK

NOTE:
WHERE CABINETS OR OTHER OBSTRUCTIONS ARE PLACED BELOW WINDOW, THE MAX HEIGHT SHALL BE +44" MAX

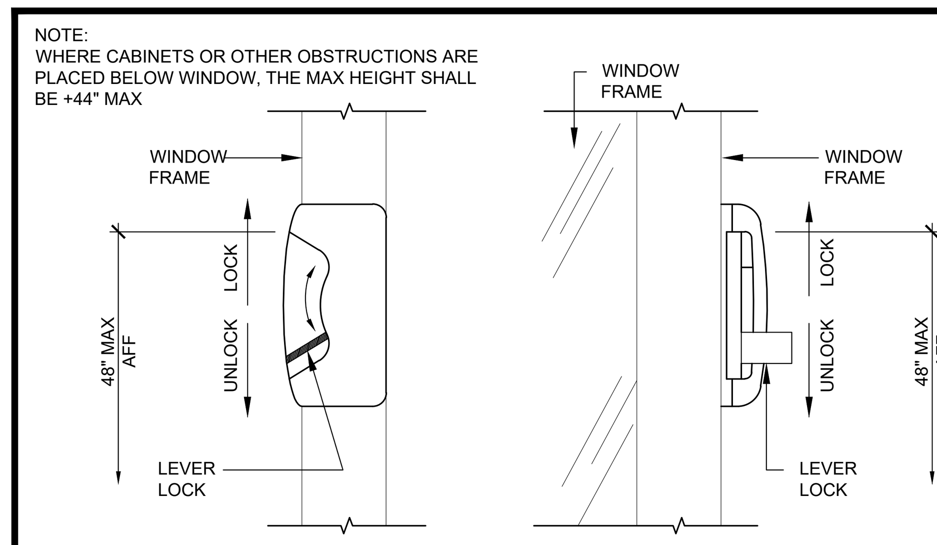


(SIDE VIEW) (FRONT VIEW)

### WINDOW HANDLE
SCALE: 6" = 1'-0"

2

STATE AGENCY APPROVAL

IDENTIFICATION STAMP
DIV. OF THE STATE ARCHITECT
APP. 04-124098 INC:
REVIEWED FOR
SS [✓] FLS [✓] ACS [✓]
DATE: 11/14/24


SKC COMPANY
15345 FAIRFIELD RANCH ROAD, SUITE #160, CHINO, CA 91709
OFFICE: (909) 740-3120, FAX: (909) 726-9470
WEBSITE: WWW.SKCCOMPANY.COM
MANUFACTURER #MF1279666 DEALER # DL1279666
GC LIC # 992118 SBE CERTIFIED



ALL DESIGNS INDICATED ON THESE PLANS/DRAWINGS ARE PROPERTY OF SKC, INC AND ARE FOR THE USE BY SKC IN THE SPECIFIED JOB ONLY. THEY SHALL NOT BE USED AND/OR DUPLICATED OR TRANSMITTED IN ANY FORM, FOR ANY PURPOSE WITHOUT THE PRIOR WRITTEN CONSENT OF SKC, INC. ANY UNAUTHORIZED USE OF THESE PLANS SHALL SUBJECT THE OWNER OF SAID PROPERTY TO LIQUIDATED DAMAGES OF $75,000.00. THESE PLANS ARE PROTECTED UNDER THE PROVISIONS OF THE 1976 COPYRIGHT ACT COPYRIGHT SKC, © ALL RIGHTS RESERVED.


DISTRICT/CUSTOMER NAME: NEXTMOD

SCHOOL/SITE NAME: STOCKPILE

SHEET TITLE:

FINISH SCHEDULES

PRE-CHECK (PC) DOCUMENT
CODE: 2022 CBC
A SEPARATE PROJECT APPLICATION FOR CONSTRUCTION IS REQUIRED

APPROVED
DIV. OF THE STATE ARCHITECT
APP: 04-122454 PC
REVIEWED FOR
SS [✓] FLS [✓] ACS [✓] CG [✓]
DATE: 11/14/2023

PROFESSIONAL OF RECORD ON PC


ORION
Structural Engineering, Inc.
11305 RANCHO BERNARDO RD SUITE 121
SAN DIEGO CA. 92127
PHONE (858) 679-1974

REGISTERED PROFESSIONAL ENGINEER
RYAN J. OVER
No. S 4437
EXP. 12/31/24
STRUCTURAL
STATE OF CALIFORNIA

FIRM: Orion Structural Engineering, Inc.
ADDRESS: 11305 Rancho Bernardo Road Ste 121
CITY: San Diego, CA
PHONE: 858-679-1974


PROJECT SPECIFIC PROFESSIONAL OF RECORD

FIRM:
ADDRESS:
CITY:
PHONE:

REVISIONS

| | |
|---|---|
| 1 | - |
| 2 | - |
| 3 | - |
| 4 | - |
| 5 | - |

| | |
|---|---|
| PROJECT NO.: | 00-0000 |
| DRAFTER: | 00 |
| SCALE: | AS NOTED |
| DATE: | 00-00-00 |

SHEET NUMBER

# A0.3

10/31/2023 11:42:11 AM

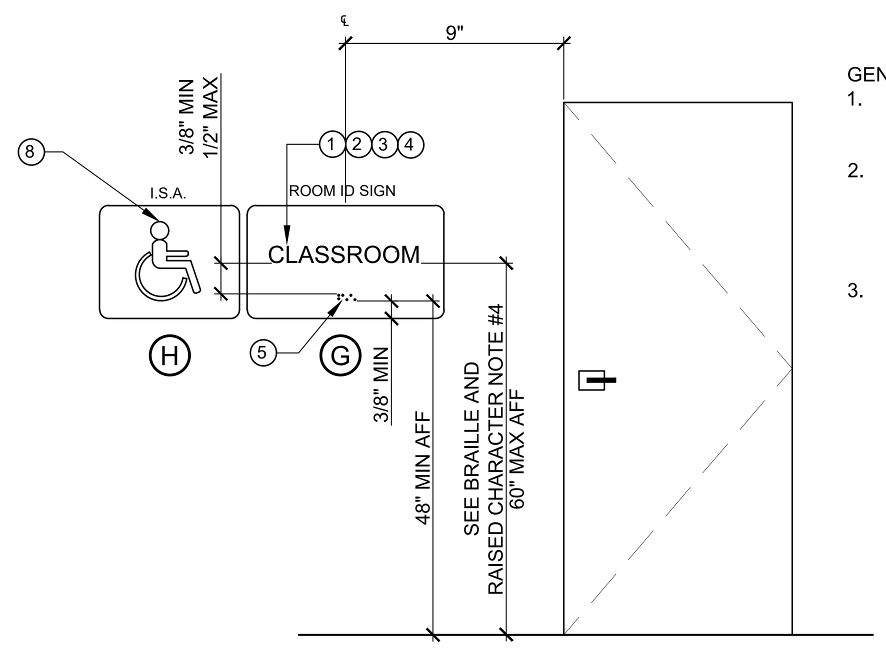


GENERAL NOTES:
1. EXIT SIGNAGE PER CBC SECTION 11B-703.2 & 11B-703.3
2. CLASSROOM SIGNAGE IS FURNISHED AND INSTALLED BY DISTRICT ON-SITE UNO. ARCHITECT TO SPECIFY DESIGN AND SIZE
3. EXIT TACTILE SIGN BY MANUFACTURER UNO

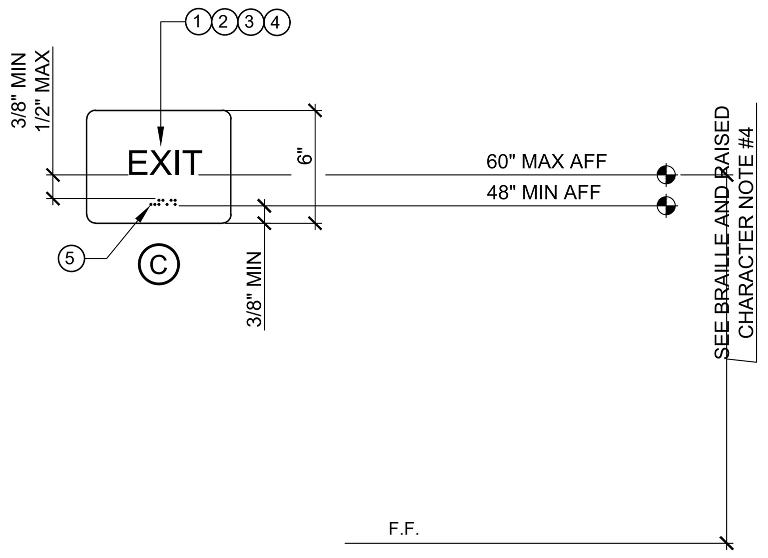


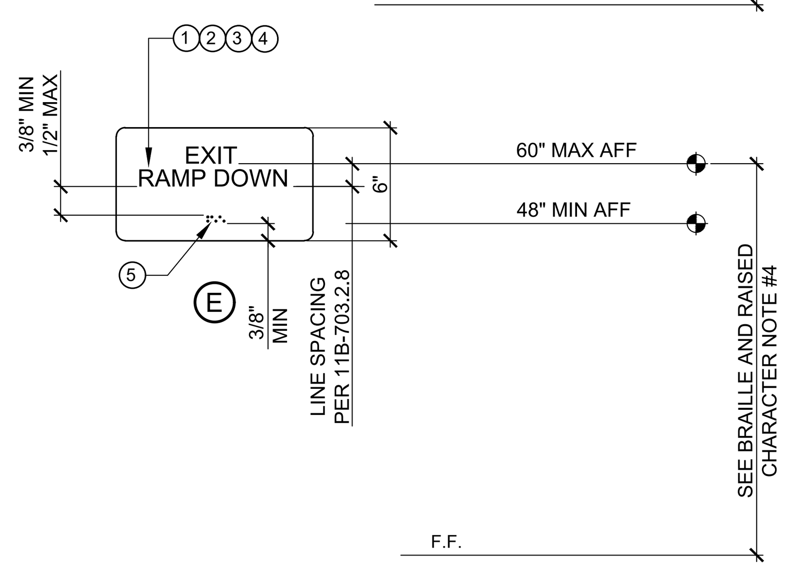


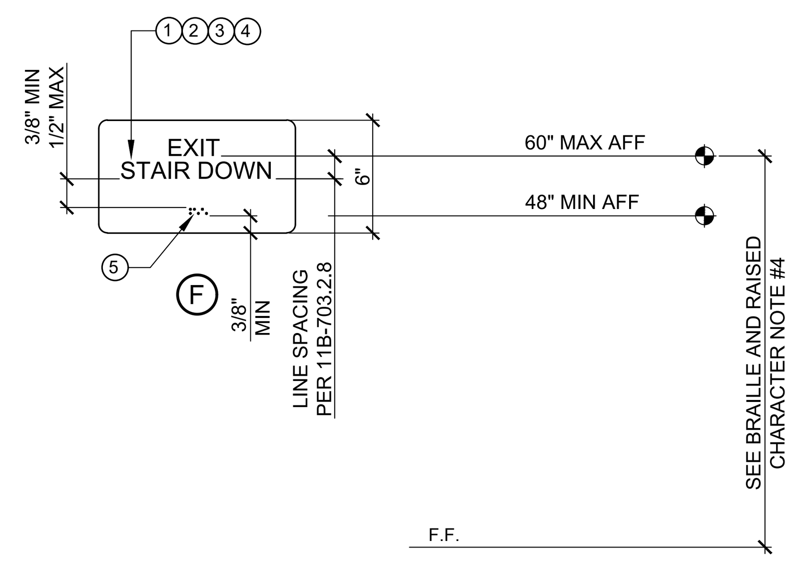


TABLE 11B-703.5.5 VISUAL CHARACTER HEIGHT

| HEIGHT TO FINISH FLOOR OR GROUND FROM BASELINE OF CHARACTER | HORIZONTAL VIEWING DISTANCE | MINIMUM CHARACTER HEIGHT |
|---|---|---|
| 40 inches (1016 mm) to less than or equal to 70 inches (1778 mm) | less than 72 inches (1829 mm) | 5/8 inch (15.9 mm) |
| | 72 inches (1829 mm) and greater | 5/8 inch (15.9 mm), plus 1/8 inch (3.2 mm) per foot (305 mm) of viewing distance above 72 inches (1829 mm) |
| Greater than 70 inches (1778 mm) to less than or equal to 120 inches (3048 mm) | less than 180 inches (4572 mm) | 2 inches (51 mm) |
| | 180 inches (4572 mm) and greater | 2 inches (51 mm) , plus 1/8 inch (3.2 mm) per foot (305 mm) of viewing distance above 180 inches (4572 mm) |
| Greater than 120 inches (3048 mm) | less than 21 feet (6401 mm) | 3 inches (76 mm) |
| | 21 feet (6401 mm) and greater | 3 inches (76 mm) , plus 1/8 inch (3.2 mm) per foot (305 mm) of viewing distance above 21 feet (6401 mm) |

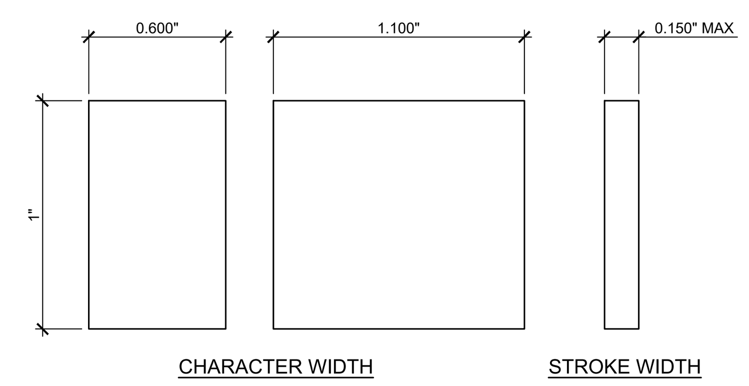


TACTILE CHARACTER PROPORTIONS COMPLIANCE

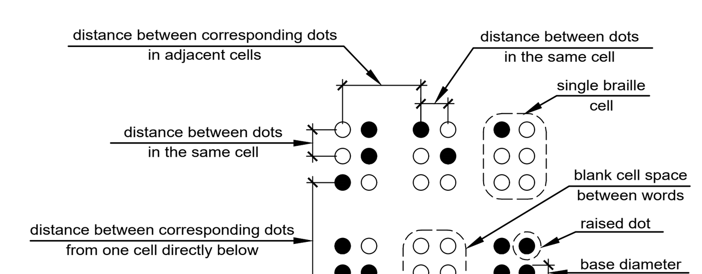


FIGURE 11B-703.3.1
BRAILLE MEASUREMENT

TABLE 11B-703.3.1 BRAILLE DIMENSIONS

| MEASUREMENT RANGE | MINIMUM IN INCHES MAXIMUM IN INCHES |
|---|---|
| DOT BASE DIAMETER | 0.059 (1.5 MM) TO 0.063 (1.6 MM) |
| DISTANCE BETWEEN TWO DOTS IN THE SAME CELL[1] | 0.100 (2.5 MM) |
| DISTANCE BETWEEN CORRESPONDING DOTS IN THE SAME CELL[1] | 0.300 (7.6 MM) |
| DOT HEIGHTS | 0.025 (0.6 MM) TO 0.037 (0.9 MM) |
| DISTANCE BETWEEN CORRESPONDING DOTS FROM ONE CELL DIRECTLY BELOW[1] | 0.395 (10 MM) TO 0.400 (10.2 MM) |
| 1. MEASURED CENTER TO CENTER | |

## BRAILLE AND RAISED CHARACTERS

(1) RAISED CHARACTERS: CBC SECTION 11B-703.2, RAISED CHARACTERS SHALL COMPLY WITH SECTION 11B-703.2 AND SHALL BE DUPLICATED IN BRAILLE COMPLYING WITH SECTION 11B-703.3. RAISED CHARACTERS SHALL BE INSTALLED IN ACCORDANCE WITH SECTION 11B-703.4

CHARACTER DEPTH: CBC SECTION 11B-703.2.1, RAISED CHARACTERS SHALL BE 1/32" MINIMUM ABOVE THEIR BACKGROUND

CHARACTER CASE: CBC SECTION 11B-703.2.2, CHARACTERS SHALL BE UPPERCASE

CHARACTER STYLE: CBC SECTION 11B-703.2.3, CHARACTER SHALL BE SANS SERIF. CHARACTERS SHALL NOT BE ITALIC, OBLIQUE, SCRIPT, HIGHLY DECORATIVE, OR OF OTHER UNUSUAL FORMS

(2) RAISED CHARACTER HEIGHT: CBC SECTION 11B-703.2.5, CHARACTER HEIGHT MEASURED VERTICALLY FROM THE BASELINE OF THE CHARACTER SHALL BE 5/8" MINIMUM AND 2" MAXIMUM BASED ON THE HEIGHT OF THE UPPERCASE LETTER "I"

(3) FINISH AND CONTRAST: CBC SECTION 11B-703.5.1, CHARACTERS AND THEIR BACKGROUND SHALL HAVE A NON-GLARE FINISH. CHARACTERS SHALL CONTRAST WITH THEIR BACKGROUND WITH EITHER LIGHT CHARACTERS ON A DARK BACKGROUND OR DARK CHARACTERS ON A LIGHT BACKGROUND

(4) RAISED CHARACTER PROPORTIONS: CBC SECTION 11B-703.2.4, CHARACTERS SHALL BE SELECTED FROM FONTS WHERE THE WIDTH OF THE UPPERCASE LETTER "O" IS 60 PERCENT MINIMUM AND 110 PERCENT MAXIMUM OF THE HEIGHT OF THE UPPERCASE LETTER LETTER "I". STROKE THICKNESS OF THE UPPERCASE LETTER "I" SHALL BE 15 PERCENT MAXIMUM OF THE HEIGHT OF THE CHARACTER

MOUNTING HEIGHT: CBC SECTION 11B-703.4.1, TACTILE CHARACTERS ON SIGNS SHALL BE LOCATED 48" MINIMUM ABOVE THE FINISH FLOOR OR GROUND SURFACE, MEASURED FROM THE BASELINE OF THE LOWEST BRAILLE CELLS AND 60" MAXIMUM ABOVE THE FINISH FLOOR OR GROUND SURFACE, MEASURED FROM THE BASELINE OF THE HIGHEST LINE OF RAISED CHARACTERS

RAISED CHARACTER SPACING: CBC SECTION 11B-703.2.7. CHARACTER SPACING SHALL BE MEASURED BETWEEN THE TWO CLOSEST POINTS OF ADJACENT RAISED CHARACTERS WITHIN A MESSAGE, EXCLUDING WORD SPACES. WHERE CHARACTERS HAVE RECTANGULAR CROSS SECTIONS, SPACING BETWEEN INDIVIDUAL RAISED CHARACTERS SHALL BE $\frac{1}{8}$ INCH (3.2 MM) MINIMUM AND CROSS SECTIONS, SPACING BETWEEN INDIVIDUAL RAISED CHARACTERS SHALL BE $\frac{1}{16}$ INCH (1.6 MM) MINIMUM AND 4 TIMES THE RAISED CHARACTER STROKE WIDTH MAXIMUM AT THE BASE OF THE CROSS SECTIONS, AND $\frac{1}{8}$ INCH (3.2 MM) MINIMUM AND 4 TIMES THE RAISED CHARACTER STROKE WIDTH MAXIMUM AT THE TOP OF THE CROSS SECTIONS. CHARACTERS SHALL BE SEPARATED FROM RAISED BORDERS AND DECORATIVE ELEMENTS $\frac{3}{8}$ INCH (9.5 MM) MINIMUM

RAISED LINE SPACING: CBC SECTIONS 11B-703.2.8. SPACING BETWEEN THE BASELINE OF SEPARATE LINES OF RAISED CHARACTERS WITHIN A MESSAGE SHALL BE 135 PERCENT MINIMUM AND 170 PERCENT MAXIMUM OF THE RAISED CHARACTER HEIGHT

(5) BRAILLE: CBC SECTION 11B-703.3, BRAILLE SHALL BE CONTRACTED (GRADE 2) AND SHALL COMPLY WITH SECTIONS 11B-703.3 AND 11B-703.4

BRAILLE DIMENSIONS AND CAPITALIZATION: CBC SECTION 11B-703.3.1, BRAILLE DOTS SHALL HAVE A DOMED OR ROUNDED SHAPE AND SHALL COMPLY WITH TABLE 11B-703.3.1. THE INDICATION OF AN UPPERCASE LETTER OR LETTERS SHALL ONLY BE USED BEFORE THE FIRST WORD OF SENTENCES, PROPER NOUNS AND NAMES, INDIVIDUAL LETTERS OF THE ALPHABET, INITIALS, AND ACRONYMS

BRAILLE POSITION: CBC SECTION 11B-703.3.2, BRAILLE SHALL BE POSITIONED BELOW THE CORRESPONDING TEXT IN A HORIZONTAL FORMAT, FLUSH LEFT OR CENTERED. IF TEXT IS MULTI-LINED, BRAILLE SHALL BE PLACED BELOW THE ENTIRE TEXT. BRAILLE SHALL BE SEPARATED 3/8" MINIMUM AND 1/2" MAXIMUM FROM ANY OTHER TACTILE CHARACTERS AND 3/8" MINIMUM FROM RAISED BORDERS AND DECORATIVE ELEMENTS

## PICTOGRAMS AND SYMBOLS (WALL ROOM I.D. SIGN)

(7) PICTOGRAM FIELD: CBC SECTION 11B-703.6.1, PICTOGRAMS SHALL HAVE A FIELD HEIGHT OF 6 INCHES MINIMUM. CHARACTERS AND BRAILLE SHALL NOT BE LOCATED IN THE PICTOGRAM FIELD

FINISH AND CONTRAST: CBC SECTION 11B-703.6.2, PICTOGRAMS AND THEIR FIELD SHALL HAVE A NON-GLARE FINISH. PICTOGRAMS SHALL CONTRAST WITH THEIR FIELD WITH EITHER A LIGHT PICTOGRAM ON A DARK FIELD OR A DARK PICTOGRAM ON A LIGHT FIELD

TEXT DESCRIPTION: CBC SECTION 11B-703.6.3, PICTOGRAMS SHALL HAVE TEXT DESCRIPTORS LOCATED DIRECTLY BELOW THE PICTOGRAM FIELD. TEXT DESCRIPTION SHALL COMPLY WITH SECTION 11B-703.2, 11B-703.3, AND 11B-703.4

(8) INTERNATIONAL SYMBOL OF ACCESSIBILITY: CBC SECTION 11B-703.7.2.1, THE INTERNATIONAL SYMBOL OF ACCESSIBILITY SHALL COMPLY WITH FIGURE 11B-703.7.2.1. THE SYMBOL SHALL CONSIST OF A WHITE FIGURE ON A BLUE BACKGROUND. THE BLUE SHALL BE COLOR NO. 15090 FEDERAL STANDARD 595C

FINISH AND CONTRAST: SYMBOLS OF ACCESSIBILITY AND THEIR BACKGROUND SHALL HAVE A NON-GLARE FINISH. SYMBOLS OR ACCESSIBILITY SHALL CONTRAST WITH THEIR BACKGROUND WITH EITHER A LIGHT SYMBOL ON A DARK BACKGROUND OR A DARK SYMBOL ON A LIGHT BACKGROUND

## VISUAL CHARACTERS

(9) CHARACTER PROPORTIONS: CBC SECTION 11B-703.5.4, CHARACTERS SHALL BE SELECTED FROM FONTS WHERE THE WIDTH OF THE UPPERCASE LETTER "O" IS 60 PERCENT MINIMUM AND 110 PERCENT MAXIMUM OF THE HEIGHT OF THE UPPERCASE LETTER LETTER "I".

(10) HEIGHT FROM FINISH FLOOR OR GROUND: CBC SECTION 11B-703.5.6, VISUAL CHARACTERS SHALL BE 40 INCHES ABOVE THE FINISH FLOOR OR GROUND

(11) NOT USED

(12) 11B-703.5 REQUIREMENTS FOR VISUAL CHARACTERS

CBC SECTION 11B-703.5.2. VISUAL CHARACTERS SHALL BE UPPERCASE OR LOWERCASE OR A COMBINATION OF BOTH.

CBC SECTION 11B-703.5.3. VISUAL CHARACTERS SHALL NOT BE ITALIC, OBLIQUE, SCRIPT, HIGHLY DECORATIVE, OR OF OTHER UNUSUAL FORMS.

CBC SECTION 11B-703.5.4. PROPORTIONS FOR VISUAL CHARACTERS SHALL BE SELECTED FROM FONTS WHERE THE WIDTH OF THE UPPERCASE LETTER "O" IS 60 % MINIMUM AND 110 % MAXIMUM OF THE HEIGHT OF THE UPPERCASE LETTER "I".

CBC TABLE 11B-703.5.5. MINIMUM CHARACTER HEIGHT SHALL COMPLY WITH TABLE 11B-703.5.5. VIEWING DISTANCE SHALL BE MEASURED AS THE HORIZONTAL DISTANCE BETWEEN THE CHARACTER AND AN OBSTRUCTION PREVENTING FURTHER APPROACH TOWARDS THE SIGN. CHARACTER HEIGHT SHALL BE BASED ON THE UPPERCASE LETTER "I".

CBC SECTION 11B-703.5.6. VISUAL CHARACTERS SHALL BE 40" MINIMUM ABOVE FINISH FLOOR OR GROUND.

CBC SECTION 11B-703.5.7. STROKE THICKNESS SHALL BE 10% MINIMUM AND 20% MAXIMUM OF THE HEIGHT OF THE CHARACTER.

CBC SECTION 11B-703.5.8. CHARACTER SPACING BETWEEN INDIVIDUAL ADJACENT CHARACTERS SHALL BE 10% MIN. AND 35% MAX. OF CHARACTER HEIGHT.

CBC SECTION 11B-703.5.9. LINE SPACING BETWEEN THE BASELINES OF SEPARATE LINES OF CHARACTERS WITHIN A MESSAGE SHALL BE 135% MIN. AND 170% MAX. OF THE CHARACTER HEIGHT.

TYPICAL SIGNAGE 1

GENERAL NOTES:
1. REST ROOM SIGNAGE PER CBC SECTION 11B-703.6 REST ROOM WALL AND DOOR SIGNAGE BY MANUFACTURER UNO
2. I.S.A. SIGN BY MANUFACTURER UNO. I.S.A. COLOR AND PROPORTIONS SHALL MATCH CBC FIGURE 11B-703.2.1 TYP WHENEVER USED

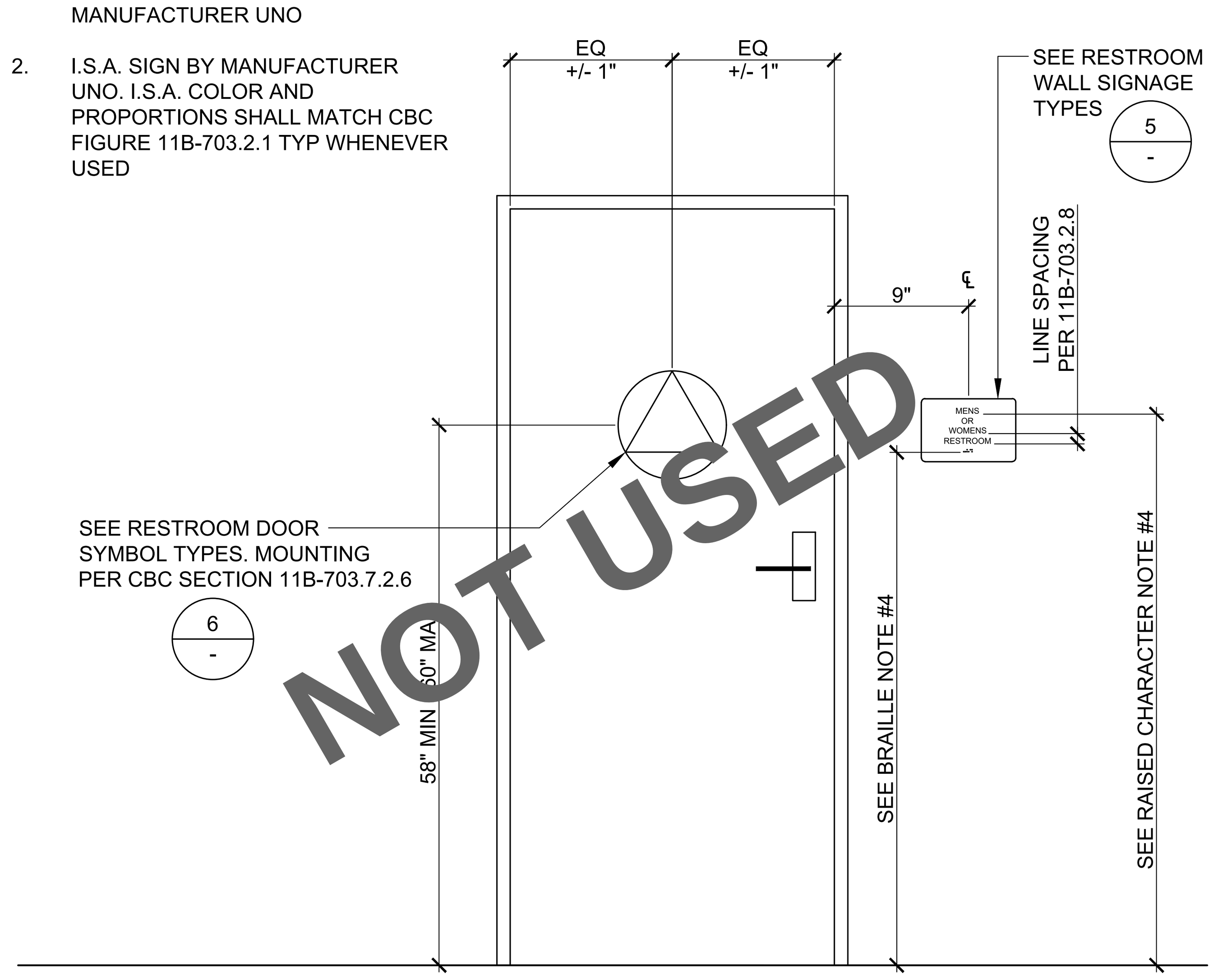


RESTROOM SIGNAGE DETAILS 7
SCALE: 1/4" = 1'-0"

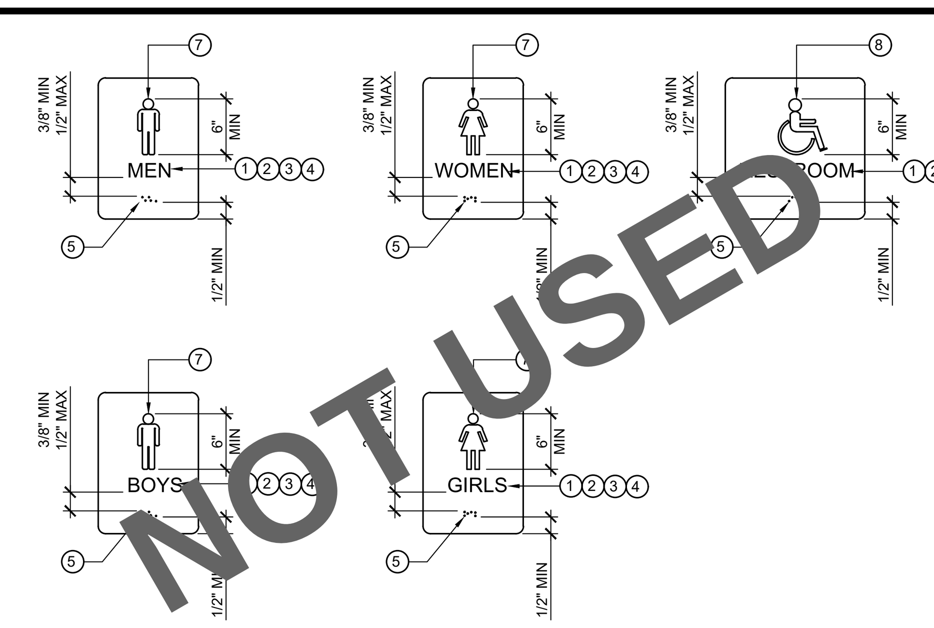


RESTROOM WALL SIGNAGE 5
SCALE: 1" = 1'-0"

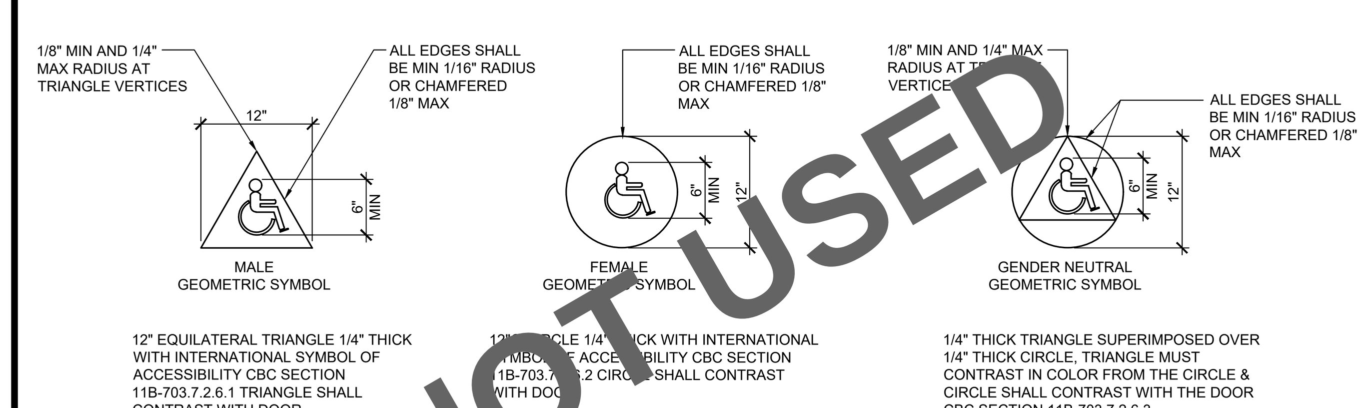


RESTROOM DOOR SYMBOLS 6
SCALE: 1" = 1'-0"

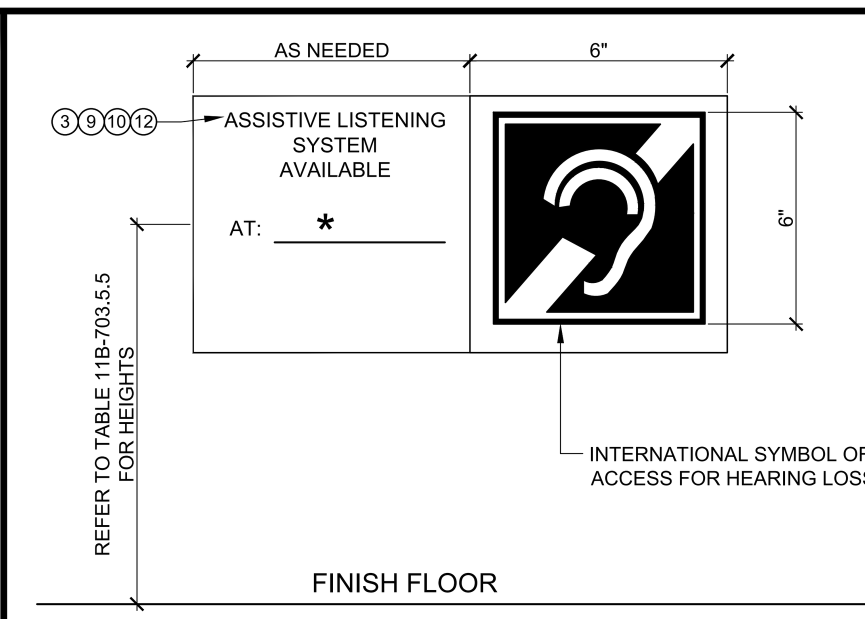


NOTES:
1. SIGN MATERIAL TO BE 1/8" THICK ES PLASTIC. MOUNT WITH VANDAL RESISTANT FASTENERS
2. CBC SECTION 11B-703.7.2.4, ASSISTIVE LISTENING SYSTEMS SHALL BE IDENTIFIED BY THE INTERNATIONAL SYMBOL OF ACCESS FOR HEARING LOSS COMPLYING WITH FIGURE 11B-703.7.2.4
3. PROVIDE ONE SIGN WHERE INDICATED ON PLANS
4. SIGN SHALL BE DISPLAYED EITHER AS A NEGATIVE OR POSITIVE IMAGE WITHIN A SQUARE THAT IS A MINIMUM OF 6 INCHES ON EACH SIDE. THE SYMBOL MAY BE SHOWN IN BLACK AND WHITE OR IN COLOR. WHEN COLOR IS USED, IT SHALL BE FEDERAL BLUE (COLOR NO. 15090 FEDERAL STANDARD 595C) ON WHITE OR WHITE ON FEDERAL BLUE. THERE SHALL BE AT LEAST A 70 PERCENT COLOR CONTRAST BETWEEN THE BACKGROUND OF THE SIGN FROM THE SURFACE THAT IT IS MOUNTED ON
5. SIGN PROVIDED BY DISTRICT UNO

* SITE SPECIFIC INFORMATION PROVIDED BY ARCHITECT (TO BE INCLUDED AS PERMANENT PART OF SIGN)

ASSISTIVE LISTENING SIGN 4
SCALE: NTS

BUILDING ID TAG 2
SCALE: NTS

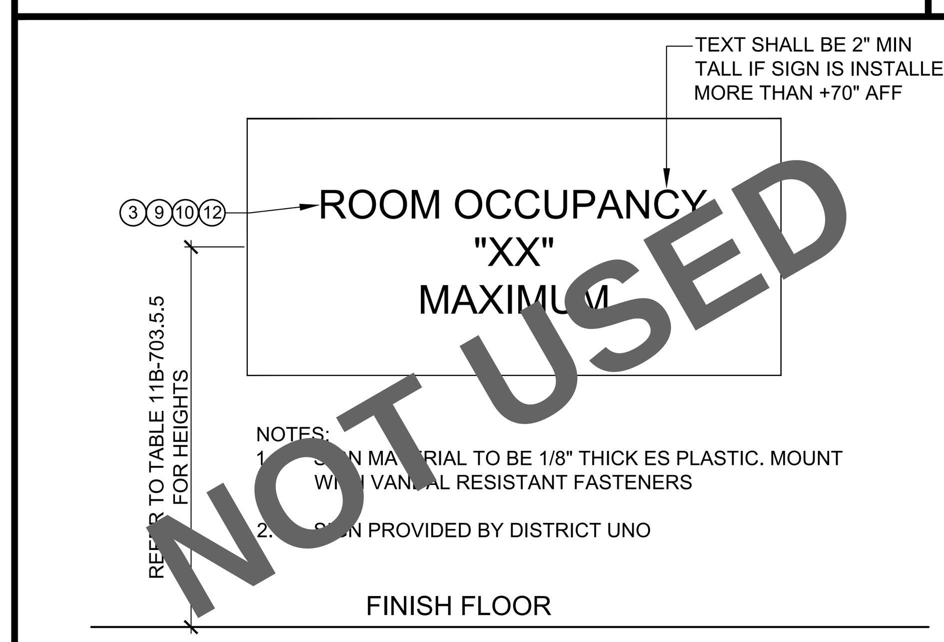


OCCUPANCY SIGN 3
SCALE: NTS

STATE AGENCY APPROVAL

IDENTIFICATION STAMP
DIV. OF THE STATE ARCHITECT
APP. 04-124098 INC:
REVIEWED FOR
SS ☑ FLS ☑ ACS ☑
DATE: 11/14/24

SKC COMPANY
15345 FAIRFIELD RANCH ROAD, SUITE #160, CHINO, CA 91709
OFFICE: (909) 740-3120, FAX: (909) 726-9470
WEBSITE: WWW.SKCCOMPANY.COM
MANUFACTURER #MF1279666 DEALER # DL1279666
GC LIC # 992118 SBE CERTIFIED

ALL DESIGNS INDICATED ON THESE PLANS/DRAWINGS ARE PROPERTY OF SKC, INC AND ARE FOR THE USE BY SKC IN THE SPECIFIED JOB ONLY. THEY SHALL NOT BE USED AND/OR DUPLICATED OR TRANSMITTED IN ANY FORM, FOR ANY PURPOSE WITHOUT THE PRIOR WRITTEN CONSENT OF SKC, INC. ANY UNAUTHORIZED USE OF THESE PLANS SHALL SUBJECT THE OWNER OF SAID PROPERTY TO LIQUIDATED DAMAGES OF $75,000.00. THESE PLANS ARE PROTECTED UNDER THE PROVISIONS OF THE 1976 COPYRIGHT ACT COPYRIGHT SKC, © ALL RIGHTS RESERVED.

DISTRICT/CUSTOMER NAME: NEXTMOD

SCHOOL/SITE NAME: STOCKPILE

SHEET TITLE:

SIGNAGE SPECIFICATIONS AND ACCESSIBILITY

PRE-CHECK (PC) DOCUMENT
CODE: 2022 CBC
A SEPARATE PROJECT APPLICATION FOR CONSTRUCTION IS REQUIRED

APPROVED
DIV. OF THE STATE ARCHITECT
APP: 04-122454 PC
REVIEWED FOR
SS ☑ FLS ☑ ACS ☑ CG ☑
DATE: 11/14/2023

PROFESSIONAL OF RECORD ON PC

ORION
Structural Engineering, Inc.
11305 RANCHO BERNARDO RD SUITE 121
SAN DIEGO CA. 92127
PHONE (858) 679-1974

FIRM: Orion Structural Engineering, Inc.
ADDRESS: 11305 Rancho Bernardo Road Ste 121
CITY: San Diego, CA
PHONE: 858-679-1974

PROJECT SPECIFIC PROFESSIONAL OF RECORD

FIRM:
ADDRESS:
CITY:
PHONE:

REVIEWS

| REVISIONS |
|---|
| 1 - |
| 2 - |
| 3 - |
| 4 - |
| 5 - |

| | |
|---|---|
| PROJECT NO.: | 00-0000 |
| DRAFTER: | 00 |
| SCALE: | AS NOTED |
| DATE: | 00-00-00 |

SHEET NUMBER

# A0.4

10/31/2023 11:42:28 AM

## ARCHITECTURAL COATINGS VOC LIMITS

| COATING CATEGORY | CURRENT VOC LIMIT | CAL GREEN CODE REFERENCE |
|---|---|---|
| FLAT COATINGS | 50 | TABLE 5.504.4.3 |
| NONFLAT COATINGS | 100 | TABLE 5.504.4.3 |
| NONFLAT HIGH GLOSS COATINGS | 150 | TABLE 5.504.4.3 |
| SPECIALTY COATINGS | | |
| ALUMINUM ROOF COATINGS | 400 | TABLE 5.504.4.3 |
| BASEMENT SPECIALTY COATINGS | 400 | TABLE 5.504.4.3 |
| BITUMINOUS ROOF COATINGS | 50 | TABLE 5.504.4.3 |
| BITUMINOUS ROOF PRIMERS | 350 | TABLE 5.504.4.3 |
| BOND BREAKERS | 350 | TABLE 5.504.4.3 |
| CONCRETE CURING COMPOUNDS | 350 | TABLE 5.504.4.3 |
| CONCRETE/MASONRY SEALERS | 100 | TABLE 5.504.4.3 |
| DRIVEWAY SEALERS | 50 | TABLE 5.504.4.3 |
| DRY FOG COATINGS | 150 | TABLE 5.504.4.3 |
| FAUX FINISHING COATINGS | 350 | TABLE 5.504.4.3 |
| FIRE RESISTIVE COATINGS | 350 | TABLE 5.504.4.3 |
| FLOOR COATINGS | 100 | TABLE 5.504.4.3 |
| FORM RELEASE COMPOUNDS | 250 | TABLE 5.504.4.3 |
| GRAPHIC ARTS COATINGS (SIGN PAINTS) | 500 | TABLE 5.504.4.3 |
| HIGH TEMPERATURE COATINGS | 420 | TABLE 5.504.4.3 |
| INDUSTRIAL MAINTENANCE COATING | 250 | TABLE 5.504.4.3 |
| LOW SOLIDS COATINGS | 120 | TABLE 5.504.4.3 |
| MAGSENITE CEMENT COATINGS | 450 | TABLE 5.504.4.3 |
| MASTIC TEXTURE COATINGS | 100 | TABLE 5.504.4.3 |
| METALLIC PIGMENTED COATINGS | 500 | TABLE 5.504.4.3 |
| MULTICOLOR COATINGS | 250 | TABLE 5.504.4.3 |
| PRETREATMENT WASH PRIMERS | 420 | TABLE 5.504.4.3 |
| PRIMERS, SEALERS AND UNDERCOATS | 100 | TABLE 5.504.4.3 |
| REACTIVE PENETRATING SEALERS | 350 | TABLE 5.504.4.3 |
| RECYCLED COATINGS | 250 | TABLE 5.504.4.3 |
| ROOF COATINGS | 50 | TABLE 5.504.4.3 |
| RUST PREVENTATIVE COATINGS | 250 | TABLE 5.504.4.3 |
| SHELLACS<br>CLEAR<br>OPAQUE | <br>730<br>550 | TABLE 5.504.4.3 |
| SPECIALTY PRIMERS, SEALERS AND UNDERCOATS | 100 | TABLE 5.504.4.3 |
| STAINS | 250 | TABLE 5.504.4.3 |
| STONE CONSOLIDANTS | 450 | TABLE 5.504.4.3 |
| SWIMMING POOL COATINGS | 340 | TABLE 5.504.4.3 |
| TRAFFIC MARKING COATINGS | 100 | TABLE 5.504.4.3 |
| TUB AND TILE REFINISH COATINGS | 420 | TABLE 5.504.4.3 |
| WATERPROOFING MEMBRANE | 250 | TABLE 5.504.4.3 |
| WOOD COATINGS | 275 | TABLE 5.504.4.3 |
| WOOD PRESERVATIVES | 350 | TABLE 5.504.4.3 |
| ZINC RICH PRIMERS | 340 | TABLE 5.504.4.3 |

## ADHESIVES VOC LIMITS

| ADHESIVES (ARCHITECTURAL APPLICATIONS) | CURRENT VOC LIMIT | CAL GREEN CODE REFERENCE |
|---|---|---|
| INDOOR CARPET ADHESIVES | 50 | TABLE 5.504.4.1 |
| CARPET PAD ADHESIVES | 50 | TABLE 5.504.4.1 |
| OUTDOOR CARPET ADHESIVES | 150 | TABLE 5.504.4.1 |
| WOOD FLOORING ADHESIVES | 100 | TABLE 5.504.4.1 |
| RUBBER FLOORING ADHESIVES | 60 | TABLE 5.504.4.1 |
| SUBFLOOR FLOOR ADHESIVES | 50 | TABLE 5.504.4.1 |
| CERAMIC TILE ADHESIVES | 65 | TABLE 5.504.4.1 |
| VCT AND ASPHALT TILE ADHESIVES | 50 | TABLE 5.504.4.1 |
| DRYWALL AND PANEL ADHESIVES | 50 | TABLE 5.504.4.1 |
| COVE BASE ADHESIVES | 50 | TABLE 5.504.4.1 |
| STRUCTURAL GLAZING ADHESIVES | 100 | TABLE 5.504.4.1 |
| SINGLE PLY ROOF MEMBRANE ADHESIVES | 250 | TABLE 5.504.4.1 |
| OTHER ADHESIVES NOT SPECIFICALLY LISTED | 50 | TABLE 5.504.4.1 |
| SPECIALTY APPLICATIONS | | |
| PVC WELDING | 510 | TABLE 5.504.4.1 |
| CPVC WELDING | 490 | TABLE 5.504.4.1 |
| ABS WELDING | 325 | TABLE 5.504.4.1 |
| PLASTIC CEMENT WELDING | 250 | TABLE 5.504.4.1 |
| ADHESIVE PRIMER FOR PLASTIC | 550 | TABLE 5.504.4.1 |
| CONTACT ADHESIVE | 80 | TABLE 5.504.4.1 |
| SPECIAL PURPOSE CONTACT ADHESIVE | 250 | TABLE 5.504.4.1 |
| STRUCTURAL WOOD MEMBER ADHESIVE | 140 | TABLE 5.504.4.1 |
| TOP AND TRIM ADHESIVE | 250 | TABLE 5.504.4.1 |
| | | |
| SUBSTRATE SPECIFIC APPLICATIONS | | |
| METAL TO METAL | 30 | TABLE 5.504.4.1 |
| PLASTIC FOAMS | 50 | TABLE 5.504.4.1 |
| POROUS MATERIALS (EXCEPT WOOD) | 50 | TABLE 5.504.4.1 |
| WOOD | 30 | TABLE 5.504.4.1 |
| FIBERGLASS | 80 | TABLE 5.504.4.1 |

## SEALANT VOC LIMITS

| SEALANTS | CURRENT VOC LIMIT | CAL GREEN CODE REFERENCE |
|---|---|---|
| ARCHITECTURAL | 250 | TABLE 5.504.4.2 |
| MARINE DECK | 760 | TABLE 5.504.4.2 |
| NONMEMBRANE ROOF | 300 | TABLE 5.504.4.2 |
| ROADWAY | 250 | TABLE 5.504.4.2 |
| SINGLE PLY ROOF MEMBRANE | 450 | TABLE 5.504.4.2 |
| OTHER | 420 | TABLE 5.504.4.2 |
| SEALANT PRIMERS | | |
| ARCHITECTURAL<br>NONPOROUS<br>POROUS | <br>250<br>775 | TABLE 5.504.4.2 |
| MODIFIED BITUMINOUS | 500 | TABLE 5.504.4.2 |
| MARINE DECK | 760 | TABLE 5.504.4.2 |
| OTHER | 750 | TABLE 5.504.4.2 |

## FORMALDEHYDE VOC LIMITS

| PRODUCTS | CURRENT LIMITS | CAL GREEN CODE REFERENCE |
|---|---|---|
| HARDWOOD PLYWOOD VENEER CORE | 0.05 | TABLE 5.504.4.5 |
| HARDWOOD PLYWOOD COMPOSITE CORE | 0.05 | TABLE 5.504.4.5 |
| PARTICLEBOARD | 0.09 | TABLE 5.504.4.5 |
| MEDIUM DENSITY FIBERBOARD | 0.11 | TABLE 5.504.4.5 |
| THIN MEDIUM DENSITY FIBERBOARD | 0.13 | TABLE 5.504.4.5 |

## LOUDNESS COMPARISON CHART

| COMMON OUTDOOR ACTIVITIES | NOISE LEVEL | COMMON INDOOR ACTIVITIES |
|---|---|---|
| JET FLY OVER AT 1,000 FT | 110 | ROCK BAND |
| CAS LAWN MOWER AT 3 FT | 100 | |
| | 90 | FOOD BLENDER AT 3 FT |
| | | |
| DIESEL TRUCK AT 50 FT AT 50 MPH | 80 | GARBAGE DISPOSAL AT 3 FT |
| NOISY URBAN AREA, DAYTIME | | |
| | | |
| GAS LAWN MOWER AT 100 FT | 70 | VACUUM CLEANER AT 10 FT |
| COMMERCIAL AREA | | NORMAL SPEECH AT 3 FT |
| | | |
| HEAVY TRAFFIC AT 300 FT | 60 | LARGE BUSINESS OFFICE |
| QUIET URBAN, DAYTIME | 50 | DISHWASHER NEXT ROOM |
| QUIET URBAN, NIGHT TIME | 40 | THEATRE |
| QUIET SUBURBAN, NIGHT TIME | | LARGE CONFERENCE ROOM BACKGROUND |
| QUIET RURAL, NIGHT TIME | 30 | LIBRARY |
| | | BEDROOM AT NIGHT |
| | | CONCERT HALL, BACKGROUND |
| | 20 | BROADCAST / RECORDING STUDIO |
| | 10 | |
| LOWEST THRESHOLD OF HUMAN HEARING | 0 | LOWEST THRESHOLD OF HUMAN HEARING |

## GENERAL NOTES

1. ALL MECHANICAL EQUIPMENT WHICH REQUIRES A FILTER SHALL NOT BE OPERATED WITHOUT A FILTER IN PLACE
2. ALL FILTERS SHALL HAVE MERV 13 AND MIN 2" THICK
3. PER SECTION 5.404.3 COVERING OF DUCT OPENINGS AND PROTECTION OF MECHANICAL EQUIPMENT DURING CONSTRUCTION SHALL BE PERFORMED AT THE END OF EACH WORK DAY AND DURING SHIPMENT OF RELOCATABLE BUILDING. ALL EXPOSED DUCTWORK AND EQUIPMENT SHALL BE COVERED
4. WHEN REQUIRED, EXTERIOR WINDOWS SHALL COMPLY WITH SECTION 5.404.4.1 FOR EXTERIOR NOISE TRANSMISSION. MIN STC 40 RATING. SEE SHEET A0.3 FOR REFERENCE.
5. PER SECTION 5.504.4.6 FOR 80% OF FLOOR AREA RECEIVING RESILIENT FLOORING, INSTALLED RESILIENT FLOORING SHALL MEET AT LEAST ONE OF THE FOLLOWING CONDITIONS:
   1. CERTIFIED UNDER THE RESILIENT FLOOR COVERING INSTITUTE (RFCI) FLOORSCORE PROGRAM.
   2. COMPLIANT WITH THE VOC-EMISSION LIMITS AND TESTING REQUIREMENTS SPECIFIED IN THE CALIFORNIA DEPARTMENT OF PUBLIC HEALTH'S 2010 STANDARD METHOD FOR THE TESTING AND EVALUATION CHAMBERS, VERSION 1.1, FEBRUARY 2010.
   3. COMPLIANT WITH THE COLLABORATIVE FOR HIGH PERFORMANCE SCHOOLS CALIFORNIA (CA-CHPS) CRITERIA INTERPRETATAION FOR EQ 7.0 AND EQ 7.1 (FORMERLY EQ 2.2) DATED JULY 2012 AND LISTED IN THE CHPS HIGH PERFORMANCE PRODUCT DATABASE.
   4. PRODUCTS CERTIFIED UNDER UL GREENGUARD GOLD (FORMERLY THE GREENGUARD CHILDREN'S AND SCHOOLS PROGRAM)
6. PER SECTION 5.504.4.4.6.1 DOCUMENTATION SHALL BE PROVIDED VERIFYING THAT THE RESILIENT FLOORING MATERIALS MEET THE POLLUTANT EMISSION LIMITS

## ACOUSTICAL CONTROL

WHEN THE PC (OR BLDG) IS SITE ADAPTED, THE BUILDING AND SITE FEATURES NEED TO COMPLY WITH THE CALGREEN CODE SECTION 5.507.4 FOR THE SPECIFIC SITE LOCATION, AND WHEN THE NEW PC (OR BLDG) IS PLACED ADJACENT TO ANOTHER EXISTING PC BUILDING (WITH ZERO SEPARATION), THE ADJOINING WALL SECTION FOR INTERIOR SOUND TRANSMISSION MUST MEET THE MINIMUM REQUIREMENT OF A STC RATING OF 40 PER SECTION 5.507.4.3

STATE AGENCY APPROVAL

IDENTIFICATION STAMP
DIV. OF THE STATE ARCHITECT
APP. 04-124098 INC:
REVIEWED FOR
SS ☑ FLS ☑ ACS ☑
DATE: 11/14/24


SKC COMPANY
15345 FAIRFIELD RANCH ROAD, SUITE #160, CHINO, CA 91709
OFFICE: (909) 740-3120, FAX: (909) 726-9470
WEBSITE: WWW.SKCCOMPANY.COM
MANUFACTURER #MF1279666 DEALER # DL1279666
GC LIC # 992118 SBE CERTIFIED



ALL DESIGNS INDICATED ON THESE PLANS/DRAWINGS ARE PROPERTY OF SKC, INC AND ARE FOR THE USE BY SKC IN THE SPECIFIED JOB ONLY. THEY SHALL NOT BE USED AND/OR DUPLICATED OR TRANSMITTED IN ANY FORM, FOR ANY PURPOSE WITHOUT THE PRIOR WRITTEN CONSENT OF SKC, INC. ANY UNAUTHORIZED USE OF THESE PLANS SHALL SUBJECT THE OWNER OF SAID PROPERTY TO LIQUIDATED DAMAGES OF $75,000.00. THESE PLANS ARE PROTECTED UNDER THE PROVISIONS OF THE 1976 COPYRIGHT ACT COPYRIGHT SKC, © ALL RIGHTS RESERVED.


DISTRICT/CUSTOMER NAME:
NEXTMOD

SCHOOL/SITE NAME:
STOCKPILE

SHEET TITLE:

CALGREEN REQUIREMENTS

PRE-CHECK (PC) DOCUMENT
CODE: 2022 CBC
A SEPARATE PROJECT APPLICATION FOR CONSTRUCTION IS REQUIRED

APPROVED
DIV. OF THE STATE ARCHITECT
APP: 04-122454 PC
REVIEWED FOR
SS ☑ FLS ☑ ACS ☑ CG ☑
DATE: 11/14/2023

PROFESSIONAL OF RECORD ON PC


ORION
Structural Engineering, Inc.
11305 RANCHO BERNARDO RD
SUITE 121
SAN DIEGO CA, 92127
PHONE: (858) 679-1974


REGISTERED PROFESSIONAL ENGINEER
RYAN J. DUBE
C 61537
EXP. 12/31/24
STRUCTURAL
STATE OF CALIFORNIA


FIRM: Orion Structural Engineering, Inc.
ADDRESS: 11305 Rancho Bernardo Road Ste 121
CITY: San Diego, CA
PHONE: 858-679-1974


PROJECT SPECIFIC PROFESSIONAL OF RECORD

FIRM:
ADDRESS:
CITY:
PHONE:

REVISIONS

1 -
2 -
3 -
4 -
5 -

| | |
|---|---|
| PROJECT NO.: | 00-0000 |
| DRAFTER: | 00 |
| SCALE: | AS NOTED |
| DATE: | 00-00-00 |

SHEET NUMBER

A0.6

10/31/2023 11:42:56 AM

## DSA 103-22: LISTING OF STRUCTURAL TESTS & SPECIAL INSPECTIONS, 2022 CBC

| Application Number: | School Name: | School District: |
|---|---|---|
| 04-122454 | 24 thru 120x40 | SKC Compnay |
| DSA File Number: | Increment Number: | Date Created: |
| PC-116 | | 2023-10-10 16:39:15 |

2022 CBC

IMPORTANT: This form is only a summary list of structural tests and some of the special inspections required for the project. Generally, the structural tests and special inspections noted on this form are those that will be performed by the Geotechnical Engineer of Record, Laboratory of Record, or Special Inspector. The actual complete test and inspection program must be performed as detailed on the DSA approved documents. The appendix at the bottom of this form identifies work NOT subject to DSA requirements for special inspection or structural testing. The project inspector is responsible for providing inspection of all facets of construction, including but not limited to, special inspections not listed on this form such as structural wood framing, high-load wood diaphragms, cold-formed steel framing, anchorage of non-structural components, etc., per Title 24, Part 2, Chapter 17A (2022 CBC).

**NOTE: Undefined section and table references found in this document are from the CBC, or California Building Code.

KEY TO COLUMNS

| 1. TYPE | 2. PERFORMED BY |
|---|---|
| Continuous – Indicates that a continuous special inspection is required | GE (Geotechnical Engineer) – Indicates that the special inspection shall be performed by a registered geotechnical engineer or his or her authorized representative. |
| Periodic – Indicates that a periodic special inspection is required | LOR (Laboratory of Record) – Indicates that the test or special inspection shall be performed by a testing laboratory accepted in the DSA Laboratory Evaluation and Acceptance (LEA) Program. See CAC Section 4-335. |
| Test – Indicates that a test is required | PI (Project Inspector) – Indicates that the special inspection may be performed by a project inspector when specifically approved by DSA. |
| | SI (Special Inspection) – Indicates that the special inspection shall be performed by an appropriately qualified/approved special inspector. |



## DSA 103-22: LISTING OF STRUCTURAL TESTS & SPECIAL INSPECTIONS (STEEL AND ALUMNINUM), 2022 CBC

1705A.2.1, Table 1705A.2.1; AISC 303-16, AISC 341-16, AISC 358-16, AISC 360-16; AISI S100-20; RCSC 2014; AWS D1.1, AWS D1.2, AWS D1.3, AWS D1.4, AWS D1.8

| Application Number: | School Name: | School District: |
|---|---|---|
| 04-122454 | 24 thru 120x40 | SKC Compnay |
| DSA File Number: | Increment Number: | Date Created: |
| PC-116 | | 2023-10-10 16:39:15 |

S/A1. STRUCTURAL STEEL, COLD-FORMED STEEL AND ALUMINUM USED FOR STRUCTURAL PURPOSES

| | Test or Special Inspection | Type | Performed By | Code References and Notes |
|---|---|---|---|---|
| ☑ | a. Verify identification of all materials and:<br>• Mill certificates indicate material properties that comply with requirements.<br>• Material sizes, types and grades comply with requirements. | Periodic | * | Table 1705A.2.1 Item 3a–3c. 2202A.1; AISI S100-20 Section A3.1 & A3.2, AISI S240-20 Section A3 & A5, AISI S220-20 Sections A4 & A6. * By special inspector or qualified technician when performed off-site. |
| ☑ | b. Test unidentified materials | Test | LOR | 2202A.1. |
| ☑ | c. Examine seam welds of HSS shapes | Periodic | SI | DSA IR 17-3. |
| ☑ | d. Verify and document steel fabrication per DSA-approved construction documents. | Periodic | SI | Not applicable to cold-formed steel light-frame construction, except for trusses (1705A.2.4). |
| ☐ | e. Buckling restrained braces. | Test | LOR | Testing and special inspections in accordance with IR 22-4. |

S/A2. HIGH-STRENGTH BOLTS:

| | Test or Special Inspection | Type | Performed By | Code References and Notes |
|---|---|---|---|---|
| ☐ | a. Verify identification markings and manufacturer's certificates of compliance conform to ASTM standards specified in the DSA-approved documents. | Periodic | SI | Table 1705A.2.1 Items 1a & 1b, 2202A.1; AISC 360-16 Section A3.3, J3.1, and N3.2; RCSC 2014 Section 1.5 & 2.1; DSA IR 17-8 & DSA IR 17-9. |
| ☐ | b. Test high-strength bolts, nuts and washers. | Test | LOR | Table 1705A.2.1 Item 1c, 2213A.1; RCSC 2014 Section 7.2; DSA IR 17-8. |
| ☐ | c. Bearing-type ("snug tight") connections. | Periodic | SI | Table 1705A.2.1 Item 2a, 1705A.2.6, 2204A.2; AISC 360-16 J3.1, J3.2, M2.5 & N5.6; RCSC 2014 Section 9.1; DSA IR 17-9. |
| ☐ | d. Pretensioned and slip-critical connections. | * | SI | Table 1705A.2.1 Items 2b & 2c, 1705A.2.6, 2204A.2; AISC 360-16 J3.1, J3.2, M2.5 & N5.6; RCSC 2014 Sections 9.2 & 9.3; DSA IR 17-9. *"Continuous" or "Periodic" depends on the tightening method used. |



## DSA 103-22: LISTING OF STRUCTURAL TESTS & SPECIAL INSPECTIONS (STEEL AND ALUMNINUM), 2022 CBC

1705A.2.1, Table 1705A.2.1; AISC 303-16, AISC 341-16, AISC 358-16, AISC 360-16; AISI S100-20; RCSC 2014; AWS D1.1, AWS D1.2, AWS D1.3, AWS D1.4, AWS D1.8

| Application Number: | School Name: | School District: |
|---|---|---|
| 04-122454 | 24 thru 120x40 | SKC Compnay |
| DSA File Number: | Increment Number: | Date Created: |
| PC-116 | | 2023-10-10 16:39:15 |

S/A3. WELDING:

| | Test or Special Inspection | Type | Performed By | Code References and Notes |
|---|---|---|---|---|
| ☑ | a. Verify weld filler material identification markings per AWS designation listed on the DSA-approved documents and the WPS. | Periodic | SI | 1705A.2.5, Table 1705A.2.1 Items 4 & 5; AWS D1.1 and AWS D1.8 for structural steel; AWS D1.2 for Aluminum; AWS D1.3 for cold-formed steel; AWS D1.4 for reinforcing steel; DSA IR 17-3. |
| ☑ | b. Verify weld filler material manufacturer's certificate of compliance. | Periodic | SI | DSA IR 17-3. |
| ☑ | c. Verify WPS, welder qualifications and equipment. | Periodic | SI | DSA IR 17-3. |

S/A4. SHOP WELDING (IN ADDITION TO SECTION S/A3):

| | Test or Special Inspection | Type | Performed By | Code References and Notes |
|---|---|---|---|---|
| ☑ | a. Inspect groove welds, multi-pass fillet welds, single pass fillet welds > 5/16", plug and slot welds. | Continuous | SI | Table 1705A.2.1 Items 5a.1–4; AISC 360-16 (and AISC 341-16 as applicable); DSA IR 17-3. |
| ☑ | b. Inspect single-pass fillet welds ≤ 5/16", floor and roof deck welds. | Periodic | SI | 1705A.2.2, Table 1705A.2.1 Items 5a.5 & 5a.6; AISC 360-16 (and AISC 341-16 as applicable); DSA IR 17-3. |
| ☐ | c. Inspect welding of stairs and railing systems. | Periodic | SI | 1705A.2.1; AISC 360-16 (and AISC 341-16 as applicable); AWS D1.1 & D1.3; DSA IR 17-3. |
| ☐ | d. Verification of reinforcing steel weldability other than ASTM A706. | Periodic | SI | 1705A.3.1; AWS D1.4; DSA IR 17-3. Verify carbon equivalent reported on mill certificates. |
| ☐ | e. Inspect welding of reinforcing steel. | Continuous | SI | Table 1705A.2.1 Item 5b, 1705A.3.1, Table 1705A.3 Item 2, 1903A.8; AWS D1.4; DSA IR 17-3. |



## DSA 103-22: LISTING OF STRUCTURAL TESTS & SPECIAL INSPECTIONS (STEEL AND ALUMNINUM), 2022 CBC

1705A.2.1, Table 1705A.2.1; AISC 303-16, AISC 341-16, AISC 358-16, AISC 360-16; AISI S100-20; RCSC 2014; AWS D1.1, AWS D1.2, AWS D1.3, AWS D1.4, AWS D1.8

| Application Number: | School Name: | School District: |
|---|---|---|
| 04-122454 | 24 thru 120x40 | SKC Compnay |
| DSA File Number: | Increment Number: | Date Created: |
| PC-116 | | 2023-10-10 16:39:15 |

| | Test or Special Inspection | Type | Performed By | Code References and Notes |
|---|---|---|---|---|
| | S/A5. FIELD WELDING (IN ADDITION TO SECTION S/A3): | | | |
| | Test or Special Inspection | Type | Performed By | Code References and Notes |
| ☐ | a. Inspect groove welds, multi-pass fillet welds, single pass fillet welds > 5/16", plug and slot welds. | Continuous | SI | Table 1705A.2.1 Items 5a.1–4; AISC 360-16 (AISC 341-16 as applicable); DSA IR 17-3. |
| ☐ | b. Inspect single-pass fillet welds ≤ 5/16". | Periodic | SI | Table 1705A.2.1 Item 5a.5; AISC 360-16 (AISC 341-16 as applicable); DSA IR 17-3. |
| ☐ | c. Inspect end-welded studs (ASTM A-108) installation (including bend test). | Periodic | SI | 2213A.2; AISC 360-16 (AISC 341-16 as applicable); AWS D1.1; DSA IR 17-3. |
| ☐ | d. Inspect floor and roof deck welds. | Periodic | SI | 1705A.2.2, Table 1705A.2.1 Item 5a.6; AISC 360-16 (AISC 341-16 as applicable); AWS D1.3; DSA IR 17-3. |
| ☐ | e. Inspect welding of structural cold-formed steel. | Periodic | SI* | 1705A.2.5; AWS D1.3; DSA IR 17-3. The quality control provisions of AISI S240-20 Chapter D shall also apply. * May be performed by the project inspector when specifically approved by DSA. |
| ☐ | f. Inspect welding of stairs and railing systems. | Periodic | SI* | 1705A.2.1; AISC 360-16 (AISC 341-16 as applicable); AWS D1.1 & D1.3; DSA IR 17-3. * May be performed by the project inspector when specifically approved by DSA. |
| ☐ | g. Verification of reinforcing steel weldability. | Periodic | SI | 1705A.3.1; AWS D1.4; DSA IR 17-3. Verify carbon equivalent reported on mill certificates. |
| ☐ | h. Inspect welding of reinforcing steel. | Continuous | SI | Table 1705A.2.1 Item 5b, 1705A.3.1, Table 1705A.3 Item 2, 1903A.8; AWS D1.4; DSA IR 17-3. |



## DSA 103-22: LISTING OF STRUCTURAL TESTS & SPECIAL INSPECTIONS (STEEL AND ALUMNINUM), 2022 CBC

1705A.2.1, Table 1705A.2.1; AISC 303-16, AISC 341-16, AISC 358-16, AISC 360-16; AISI S100-20; RCSC 2014; AWS D1.1, AWS D1.2, AWS D1.3, AWS D1.4, AWS D1.8

| Application Number: | School Name: | School District: |
|---|---|---|
| 04-122454 | 24 thru 120x40 | SKC Compnay |
| DSA File Number: | Increment Number: | Date Created: |
| PC-116 | | 2023-10-10 16:39:15 |

| | Test or Special Inspection | Type | Performed By | Code References and Notes |
|---|---|---|---|---|
| | S/A6. NONDESTRUCTIVE TESTING: | | | |
| | Test or Special Inspection | Type | Performed By | Code References and Notes |
| ☑ | a. Ultrasonic | Test | LOR | 1705A.2.1, 1705A.2.5; AISC 341-16 J6.2, AISC 360-16 N5.5; AWS D1.1, AWS D1.8; DSA IR 17-2. |
| ☑ | b. Magnetic Particle | Test | LOR | 1705A.2.1, 1705A.2.5; AISC 341-16 J6.2, AISC 360-16 N5.5; AWS D1.1, AWS D1.8; DSA IR 17-2. |
| ☐ | c. | Test | LOR | |

S/A7. STEEL JOISTS AND TRUSSES:

| | Test or Special Inspection | Type | Performed By | Code References and Notes |
|---|---|---|---|---|
| ☐ | a. Verify size, type and grade for all chord and web members as well as connectors and weld filler material; verify joist profile, dimensions and camber (if applicable); verify all weld locations, lengths and profiles; mark or tag each joist. | Continuous | SI | 1705A.2.3, Table 1705A.2.3; AWS D1.1; DSA IR 22-3 for steel joists only. 1705A.2.4; AWS D1.3 for cold-formed steel trusses. |



## DSA 103-22: LISTING OF STRUCTURAL TESTS & SPECIAL INSPECTIONS (STEEL AND ALUMNINUM), 2022 CBC

1705A.2.1, Table 1705A.2.1; AISC 303-16, AISC 341-16, AISC 358-16, AISC 360-16; AISI S100-20; RCSC 2014; AWS D1.1, AWS D1.2, AWS D1.3, AWS D1.4, AWS D1.8

| Application Number: | School Name: | School District: |
|---|---|---|
| 04-122454 | 24 thru 120x40 | SKC Compnay |
| DSA File Number: | Increment Number: | Date Created: |
| PC-116 | | 2023-10-10 16:39:15 |

| | Test or Special Inspection | Type | Performed By | Code References and Notes |
|---|---|---|---|---|
| | S/A8. SPRAYED FIRE-RESISTANT MATERIALS: | | | |
| | Test or Special Inspection | Type | Performed By | Code References and Notes |
| ☐ | a. Examine structural steel surface conditions, inspect application, take samples, measure thickness and verify compliance of all aspects of application with DSA-approved documents. | Periodic | SI | 1705A.15, 1705A.1, 1705A.2, 1705A.3, 1705A.4. |
| ☐ | b. Test density. | Test | LOR | 1705A.15.1, 1705A.15.5, ASTM E736 |
| ☐ | c. Bond strength adhesion/cohesion. | Test | LOR | 1705A.15.1, 1705A.15.4, ASTM E605 |

S/A9. ANCHOR BOLTS AND ANCHOR RODS:

| | Test or Special Inspection | Type | Performed By | Code References and Notes |
|---|---|---|---|---|
| ☑ | a. Anchor Bolts and Anchor Rods | Test | LOR | Sample and test anchor bolts and anchor rods not readily identifiable per procedures noted in DSA IR 17-11. |
| ☐ | b. Threaded rod not used for foundation anchorage. | Test | LOR | Sample and test threaded rods not readily identifiable per procedures noted in DSA IR 17-11. |

S/A10. STORAGE RACK SYSTEMS:

| | Test or Special Inspection | Type | Performed By | Code References and Notes |
|---|---|---|---|---|
| ☐ | a. Materials used, to verify compliance with one or more of the material test reports in accordance with the approved construction documents. | Periodic | SI | Table 1705A.13.7 |
| ☐ | b. Fabricated storage rack elements. | Periodic | SI | 1704A.2.5; Table 1705A.13.7 |



## DSA 103-22: LISTING OF STRUCTURAL TESTS & SPECIAL INSPECTIONS (STEEL AND ALUMNINUM), 2022 CBC

1705A.2.1, Table 1705A.2.1; AISC 303-16, AISC 341-16, AISC 358-16, AISC 360-16; AISI S100-20; RCSC 2014; AWS D1.1, AWS D1.2, AWS D1.3, AWS D1.4, AWS D1.8

| Application Number: | School Name: | School District: |
|---|---|---|
| 04-122454 | 24 thru 120x40 | SKC Compnay |
| DSA File Number: | Increment Number: | Date Created: |
| PC-116 | | 2023-10-10 16:39:15 |

| | Test or Special Inspection | Type | Performed By | Code References and Notes |
|---|---|---|---|---|
| ☐ | c. Storage rack anchorage installation. | Periodic | SI | ANSI/MH16.1 Section 7.3.2; Table 1705A.13.7 |
| ☐ | d. Completed storage rack system to indicate compliance with the approved construction documents. | Periodic | SI* | Table 1705A.13.7; * May be preformed by the project inspector when specifically approved by DSA. |

S/A11. Other Steel

| | Test or Special Inspection | Type | Performed By | Code References and Notes |
|---|---|---|---|---|
| ☐ | a. | | | |



## Appendix: Work Exempt from DSA Requirements for Structural Tests / Special Inspections

| Application Number: | School Name: | School District: |
|---|---|---|
| 04-122454 | 24 thru 120x40 | SKC Compnay |
| DSA File Number: | Increment Number: | Date Created: |
| PC-116 | | 2023-10-10 16:39:15 |

Exempt items given in DSA IR A-22 or the 2019 CBC (including DSA amendments) and those items identified below with a check mark by the design professional are NOT subject to DSA requirements for the structural tests / special inspections noted. Items marked as exempt shall be identified on the approved construction documents. The project inspector shall verify all construction complies with the approved construction documents.

| | SOILS: |
|---|---|
| ☐ | 1. Deep foundations acting as a cantilever footing with a design based on minimum allowable pressures per CBC Table 1806A.2 and without a geotechnical report for the following cases: A) free standing sign or scoreboard, B) cell or antenna towers and poles less than 35'-0" tall (e.g., lighting poles, flag poles, poles supporting open mesh fences, etc.), C) single-story structure with dead load less than 5 psf (e.g., open fabric shade structure), or D) covered walkway structure with an apex height less than 10'-0" above adjacent grade. |
| ☐ | 2. Shallow foundations, etc. are exempt from special inspections and testing by a Geotechnical Engineer for the following cases: A) buildings without a geotechnical report and meeting the exception item #1 criteria in CBC Section 1803A.2 supported by native soil (any excavation depth) or fill soil (not exceeding 12" depth per CBC Section 1804A.6), B) soil scarification/recompaction not exceeding 12" depth, C) native or fill soil supporting exterior non-structural flatwork (e.g., sidewalks, site concrete ramps, site stairs, parking lots, driveways, etc.), D) unpaved landscaping and playground areas, or E) utility trench backfill. |

| | CONCRETE/MASONRY: |
|---|---|
| ☐ | 1. Post-installed anchors for the following: A) exempt non-structural components (e.g., mechanical, electrical, plumbing equipment - see item 7 for "Welding" in the Appendix below) given in CBC Section 1617A.1.18 (which replaces ASCE 7-16, Section 13.1.4) or B) interior nonstructural wall partitions meeting criteria listed in exempt item 3 for "Welding" in the Appendix below |
| ☐ | 2. Concrete batch plant inspection is not required for items given in CBC Section 1705A.3.3.2 subject to the requirements and limitations in that section. |
| ☐ | 3. Non-bearing non-shear masonry walls may be exempt from certain DSA masonry testing and special inspection items as allowed per DSA IR 21-1. Refer to construction documents for specific exemptions accordingly for each applicable wall condition. |
| ☐ | 4. Epoxy shear dowels in site flatwork and/or other non-structural concrete. |



## Appendix: Work Exempt from DSA Requirements for Structural Tests / Special Inspections

| Application Number: | School Name: | School District: |
|---|---|---|
| 04-122454 | 24 thru 120x40 | SKC Compnay |
| DSA File Number: | Increment Number: | Date Created: |
| PC-116 | | 2023-10-10 16:39:15 |

| | CONCRETE/MASONRY: |
|---|---|
| ☐ | 5. Testing of reinforcing bars is not required for items given in CBC Section 1910A.2 subject to the requirements and limitations in that section. |

| | WELDING: |
|---|---|
| ☐ | 1. Solid-clad and open-mesh fences, gates with maximum leaf span of 10', and gates with a maximum rolling section of 10' all having an apex height less than 8'-0" above lowest adjacent grade. When located above circulation or occupied space below, these gates/fences are not located within 1.5x gate/fence height (max 8'-0") to the edge of floor or roof. |
| ☐ | 2. Handrails, guardrails, and modular or relocatable ramps associated with walking surfaces less than 30" above adjacent grade (excluding post base connections per the 'Exception' language in Section 1705A.2.1); fillet welds shall not be ground flush. |
| ☐ | 3. Non-structural interior cold-formed steel framing spanning less than 15'-0", such as in interior partitions, interior soffits, etc. supporting only self weight and light-weight finishes or adhered tile, masonry, stone, or terra cotta veneer no more than 5/8" thickness and apex less than 20'-0" in height and not over an exit way. Maximum tributary load to a member shall not exceed the equivalent of that occurring from a 10'x10' opening in a 15' tall wall for a header or king stud. |
| ☐ | 4. Manufactured support frames and curbs using hot rolled or cold-formed steel (i.e., light gauge) for mechanical, electrical, or plumbing equipment weighing less than 2000# (equipment only) (connections of such frames to superstructure elements using welding will require special inspection as noted in selected item(s) for Sections S/A3, S/A4 and/or S/A5 of listing above). |
| ☐ | 5. Manufactured components (e.g., Tolco, B-Line, Afcon, etc.) for mechanical, electrical, or plumbing hanger support and bracing (connections of such components to superstructure elements using welding will require special inspection as noted in selected item(s) for Sections S/A3, S/A4 and/or S/A5 of listing above). |
| ☐ | 6. TV Brackets, projector mounts with a valid listing (see DSA IR A-5) and recreational equipment (e.g., playground structures, basketball backstops, etc.) (connections of such elements to superstructure elements using welding will require special inspection as noted in selected item(s) for sections S/A3, S/A4 and/or S/A5 located in the Steel/Aluminum category of listing above). |
| ☐ | 7. Any support for exempt non-structural components given in CBC Section 1617A.1.18 (which replaces ASCE 7-16, Section 13.1.4) meeting the following: A) when supported on a floor/roof, <400# and resulting composite center of mass (including component's center of mass) ≤4' above supporting floor/roof, B) when hung from a wall or roof/floor, <20# for discrete units or <5 plf for distributed systems. |



## DSA 103-22: LISTING OF STRUCTURAL TESTS & SPECIAL INSPECTIONS(SIGNATURE), 2022 CBC

| Application Number: | School Name: | School District: |
|---|---|---|
| 04-122454 | 24 thru 120x40 | SKC Compnay |
| DSA File Number: | Increment Number: | Date Created: |
| PC-116 | | 2023-10-10 16:39:15 |

Name of Architect or Engineer in general responsible charge:

Name of Structural Engineer (When structural design has been delegated):

Signature of Architect or Structural Engineer: Date:

Note: To facilitate DSA electronic mark-ups and identification stamp application, DSA recommends against using secured electronic or digital signatures.

DSA STAMP



## DSA 103-22: LIST OF REQUIRED VERIFIED REPORTS, CBC 2022

| Application Number: | School Name: | School District: |
|---|---|---|
| 04-122454 | 24 thru 120x40 | SKC Compnay |
| DSA File Number: | Increment Number: | Date Created: |
| PC-116 | | 2023-10-10 16:39:15 |

1. Structural Testing and Inspection: Laboratory Verified Report Form DSA 291
2. Shop Welding Inspection: Laboratory Verified Report Form DSA 291, or, for independently contracting SI, Special Inspection Verified Report Form DSA 292



THE SAMPLE DSA 103 FORMS SHOWN ON THIS SHEET ARE FOR ILLUSTRATION PURPOSES ONLY. A SEPARATE DSA 103 FORM IS TO BE COMPLETED FOR EACH PROJECT SPECIFIC APPLICATION THAT THIS PC IS BEING INCORPORATED INTO. THE DSA 103 FORM IS TO BE COMPLETED BY THE ARCHITECT OF RECORD FOR THE OVERALL SCOPE OF WORK ON THE PROJECT SPECIFIC APPLICATION. MODULAR BUILDING MANUFACTURER (OR DESIGN BUILD CONTRACTOR) IS ONLY RESPONSIBLE FOR COMPLETING DSA103 FORM ON STOCKPILE PROJECTS. THE SAMPLE DSA 103 FORM SHALL BE CROSSED OUT ON THIS DRAWING.

## NOTES:

IF DETAIL #10/F1.8 IS APPLICABLE: INCLUDE SECTION S/A9 ON DSA 103-22 FORM SHOWN ABOVE

STATE AGENCY APPROVAL

IDENTIFICATION STAMP
DIV. OF THE STATE ARCHITECT
APP. 04-124098 INC:
REVIEWED FOR
SS ☑ FLS ☑ ACS ☑
DATE: 11/14/24

KSC COMPANY

15345 FAIRFIELD RANCH ROAD, SUITE #160, CHINO, CA 91709
OFFICE: (909) 740-3120, FAX: (909) 726-9470
WEBSITE: WWW.SKCCOMPANY.COM
MANUFACTURER #MF1279666 DEALER # DL1279666
GC LIC # 992118 SBE CERTIFIED

ALL DESIGNS INDICATED ON THESE PLANS/DRAWINGS ARE PROPERTY OF SKC, INC AND ARE FOR THE USE BY SKC IN THE SPECIFIED JOB ONLY. THEY SHALL NOT BE USED AND/OR DUPLICATED OR TRANSMITTED IN ANY FORM, FOR ANY PURPOSE WITHOUT THE PRIOR WRITTEN CONSENT OF SKC, INC. ANY UNAUTHORIZED USE OF THESE PLANS SHALL SUBJECT THE OWNER OF SAID PROPERTY TO LIQUIDATED DAMAGES OF $75,000.00. THESE PLANS ARE PROTECTED UNDER THE PROVISIONS OF THE 1976 COPYRIGHT ACT COPYRIGHT SKC, © ALL RIGHTS RESERVED.

DISTRICT/CUSTOMER NAME: NEXTMOD

SCHOOL/SITE NAME: STOCKPILE

SHEET TITLE:

SAMPLE DSA 103 WOOD FOUNDATION OR BUILDING STOCKPILE PROJECTS

PRE-CHECK (PC) DOCUMENT
CODE: 2022 CBC
A SEPARATE PROJECT APPLICATION FOR CONSTRUCTION IS REQUIRED

APPROVED
DIV. OF THE STATE ARCHITECT
APP: 04-122454 PC
REVIEWED FOR
SS ☑ FLS ☑ ACS ☑ CG ☑
DATE: 11/14/2023

PROFESSIONAL OF RECORD ON PC

ORION
Structural Engineering, Inc.
11305 RANCHO BERNARDO RD
SUITE 121
SAN DIEGO CA. 92127
PHONE (858) 679-1974

REGISTERED PROFESSIONAL ENGINEER
RYAN J. OVER
No. S 4437
EXP. 12/31/24
STRUCTURAL
STATE OF CALIFORNIA

| | |
|---|---|
| FIRM: | Orion Structural Engineering, Inc. |
| ADDRESS: | 11305 Rancho Bernardo Road Ste 121 |
| CITY: | San Diego, CA |
| PHONE: | 858-679-1974 |

PROJECT SPECIFIC PROFESSIONAL OF RECORD

FIRM:
ADDRESS:
CITY:
PHONE:

REVISIONS

1 -
2 -
3 -
4 -
5 -

| | |
|---|---|
| PROJECT NO.: | 00-0000 |
| DRAFTER: | 00 |
| SCALE: | AS NOTED |
| DATE: | 00-00-00 |

SHEET NUMBER

# A0.8a

10/31/2023 11:44:13 AM

## Attachment 1

## 2019 CALIFORNIA GREEN BUILDING STANDARDS CODE

Division of the State Architect – Structural Safety (DSA-SS)
(CCR, Title 24, Part 11)

### CHAPTER 3 – GREEN BUILDING

### SECTION 301 – GENERAL

**301.4 Mandatory measures for public schools and community colleges. [DSA-SS]** New building construction and site work on a new or existing site shall comply with Section 301.4.

**301.4.1** Building and site construction on a new site shall comply with Chapter 5 as adopted by DSA-SS.

**301.4.2** Work on an existing site shall comply with Section 301.4.2.

**301.4.2.1** Newly constructed site work shall comply with Chapter 5 as adopted by DSA-SS.

**301.4.2.2** Newly constructed buildings shall comply with Chapter 5 as adopted by DSA-SS and Section 301.4.3.

**301.4.2.3** Additions to existing buildings shall comply with Section 301.4.3.

**301.4.2.4** Rehabilitated landscape areas shall comply with Sections 5.304.6 and 5.106.12.

**301.4.3 Minimum rehabilitated landscape area requirement.** A minimum rehabilitated landscape area equal to 75 percent of the footprint area of the building shall comply with Section 5.304.6 and Section 106.12. New buildings or additions to existing buildings less than 1,600 square feet shall not be required to comply with Section 301.4.3.

### CHAPTER 5 – NONRESIDENTIAL MANDATORY MEASURES

### DIVISION 5.1 – PLANNING AND DESIGN

**SECTION 5.106 – SITE DEVELOPMENT**

**5.106.4.2 Bicycle parking. [DSA-SS]** For public schools and community colleges, comply with Sections 5.106.4.2.1 and 5.106.4.2.2.

☐ **5.106.4.2.1 Student bicycle parking.** Provide permanently anchored bicycle racks conveniently accessed with a minimum of four two-bike capacity racks per new building.

☐ **5.106.4.2.2 Staff bicycle parking.** Provide permanent secure bicycle parking conveniently accessed with a minimum of two staff bicycle parking spaces per new building. Acceptable parking facilities shall be convenient from the street or staff parking area and shall meet one of the following:

1. Covered, lockable enclosures with permanently anchored racks for bicycles;
2. Lockable bicycle rooms with permanently anchored racks; or
3. Lockable, permanently anchored bicycle lockers.

☐ **5.106.5.3 Electric vehicle (EV) charging. [N]** Construction shall comply with Section 5.106.5.3.1 or Section 5.106.5.3.2 to facilitate future installation of electric vehicle supply equipment (EVSE). When EVSE(s) is/are installed, it shall be in accordance with the

*California Building Code*, the *California Electrical Code* and as follows:





☐ **5.106.5.3.1 Single charging space requirements. [N]** When only a single charging space is required per Table 5.106.5.3.3, a raceway is required to be installed at the time of construction and shall be installed in accordance with the *California Electrical Code.* Construction plans and specifications shall include, but are not limited to, the following:

1. The type and location of the EVSE.
2. A listed raceway capable of accommodating a 208/240-volt dedicated branch circuit.
3. The raceway shall not be less than trade size 1 inch.
4. The raceway shall originate at a service panel or a subpanel serving the area, and shall terminate in close proximity to the proposed location of the charging equipment and into a listed suitable cabinet, box, enclosure or equivalent.
5. The service panel or subpanel shall have sufficient capacity to accommodate a minimum 40-amprere dedicated branch circuit for the future installation of the EVSE.

☐ **5.106.5.3.2 Multiple charging space requirements. [N]** When multiple charging spaces are required per Table 5.106.5.3.3 raceway(s) is/are required to be installed at the time of construction and shall be installed in accordance with the *California Electrical Code.* Construction plans and specifications shall include, but are not limited to, the following:

1. The type and location of the EVSE.
2. The raceway(s) shall originate at a service panel or a subpanel(s) serving the area, and shall terminate in close proximity to the proposed location of the charging equipment and into listed suitable cabinet(s), box(es), enclosure(s) or equivalent.
3. Plan design shall be based upon 40-amprere minimum branch circuits.
4. Electrical calculations shall substantiate the design of the electrical system, to include the rating of equipment and any on-site distribution transformers and have sufficient capacity to simultaneously charge all required EVs at its full rated amperage.
5. The service panel or subpanel(s) shall have sufficient capacity to accommodate the required number of dedicated branch circuit(s) for the future installation of the EVSE.

**EV charging space calculation. [N]** Table 5.106.5.3.3 shall be used to determine if single or multiple charging space requirements apply for the future installation of EVSE.

**Exceptions:** On a case-by-case basis where the local enforcing agency has determined EV charging and infrastructure is not feasible based upon one or more of the following conditions:

1. Where there is insufficient electrical supply.
2. Where there is evidence suitable to the local enforcing agency substantiating that additional local utility infrastructure design requirements, directly related to the implementation of Section 5.106.5.3, may adversely impact the construction cost of the project.





**TABLE 5.106.5.3.3**

| TOTAL NUMBER OF ACTUAL PARKING SPACES | NUMBER OF REQUIRED EV CHARGING SPACES |
|---|---|
| 0 – 9 | 0 |
| 10 – 25 | 1 |
| 26 – 50 | 2 |
| 51 – 75 | 4 |
| 76 – 100 | 5 |
| 101 – 150 | 7 |
| 151 – 200 | 10 |
| 201 and over | 6 percent of total [1] |

1. Calculation for spaces shall be rounded up to the nearest whole number.

☐ **5.106.5.3.4 [N] Identification.** The service panel or subpanel(s) circuit directory shall identify the reserved overcurrent protective device space(s) for future EV charging as "EV CAPABLE". The raceway termination location shall be permanently and visibly marked as "EV CAPABLE."

☐ **5.106.5.3.5 [N] Future charging spaces.** Future charging spaces qualify as designated parking as described in Section 5.106.5.2 Designated parking for clean air vehicles.

☒ **5.106.8 Light pollution reduction. [N]** Outdoor lighting systems shall be designed and installed to comply with the following:

1. The minimum requirements in the *California Energy Code* for Lighting Zones 0 to 4 as defined in Chapter 10, Section 10-114 of the *California Administrative Code,* and
2. Backlight, (B) ratings as defined in Illuminating Engineering Society of North America (IESNA) TM-15-11*(shown in TABLE A-1 in Chapter 8),* and
3. Uplight and Glare ratings as defined in *California Energy Code* (shown in TABLES 130.2-A and 130.2-B in Chapter 8) and
4. Allowable Backlight, Uplight, and Glare (BUG) ratings not exceeding those shown in Table 5.106.8 [N], or Comply with a local ordinance lawfully enacted pursuant to Section 101.7, whichever is more stringent.

**Exceptions: [N]**

1. Luminaires that qualify as exceptions in Section 140.7 of the *California Energy Code.*
2. Emergency lighting.
3. Building facade meeting the requirements in Table 140.7-B of the *California Energy Code*, Part 6.
4. Custom lighting features as allowed by the local enforcing agency, as permitted by Section 101.8 Alternate materials, designs and methods of construction.





**Notes:**

1. **[N]** See also *California Building Code,* Chapter 12, Section 1205.7 for college campus lighting requirements for parking facilities and walkways.
2. Refer to Chapter 8 (Compliance Forms, Worksheets and Reference Material) for Illuminating Engineering Society Technical Memorandum TM-15-11 Table A-1, *California Energy Code* Tables 130.2-A and 130.2-B.
3. Refer to the California Energy Code for requirements for additions and alterations.

**TABLE 5.106.8 [N]**

**MAXIMUM ALLOWABLE BACKLIGHT, UPLIGHT, AND GLARE (BUG) RATINGS**
(See CALGreen for TABLE)

☐ **5.106.10 Grading and paving.** Construction plans shall indicate how site grading or a drainage system will manage all surface water flows to keep water from entering buildings. Examples of methods to manage surface water include, but are not limited to, the following:

1. Swales.
2. Water collection and disposal systems.
3. French drains.
4. Water retention gardens.
5. Other water measures which keep surface water away from buildings and aid in groundwater recharge.

**Exception:** Additions and alterations not altering the drainage path.

☐ **5.106.12 Shade trees. [DSA-SS]** Shade trees shall be planted to comply with Sections 5.106.12.1, 5.106.12.2, and 5.106.12.3. Percentages shown shall be measured at noon on the summer solstice. Landscape irrigation necessary to establish and maintain tree health shall comply with Section 5.304.6.

☐ **5.106.12.1 Surface parking areas.** Shade tree plantings, minimum #10 container size or equal, shall be installed to provide shade over 50% of the parking area within 15 years.

**Exception:** The surface parking area covered by solar photovoltaic shade structures, or shade structures with roofing materials that comply with Table A5.106.11.2.2 in Appendix A5, are not included in the total area calculation.

☐ **5.106.12.2 Landscape areas.** Shade trees plantings, minimum #10 container size or equal, shall be installed to provide shade over 20% of the landscape area within 15 years

**Exception:** Playfields for organized sport activity are not included in the total area calculation.

☐ **5.106.12.3 Hardscape areas.** Shade trees plantings, minimum #10 container size or equal, shall be installed to provide shade over 20% of the hardscape area within 15 years.

**Exception:** Walks, hardscape areas covered by solar photovoltaic shade structures, and hardscape areas covered by shade structures with roofing materials that comply with Table A5.106.11.2.2 in Appendix A5, are not included in the total area calculation.

### DIVISION 5.2 – ENERGY EFFICIENCY

**SECTION 5.201 – GENERAL**

☒ **5.201.1 California Energy Code.** For the purposes of mandatory energy efficiency standards in this code, the California Energy Commission will continue to adopt mandatory standards.





### DIVISION 5.3 – WATER EFFICIENCY AND CONSERVATION

**SECTION 5.303 – INDOOR WATER USE**

**5.303.3 Water conserving plumbing fixtures and fittings.** Plumbing fixtures (water closets and urinals) and fittings (faucets and showerheads) shall comply with the following:

☒ **5.303.3.1 Water closets.** The effective flush volume of all water closets shall not exceed 1.28 gallons per flush. Tank-type water closets shall be certified to the performance criteria of the U.S. EPA WaterSense Specifications for Tank-Type Toilets.

**Note:** The effective flush volume of dual flush toilets is defined as the composite, average flush volume of two reduced flushes and one full flush.

**5.303.3.2 Urinals**.

☒ **5.303.3.2.1 Wall mounted urinals**. The effective flush volume of wall mounted urinals shall not exceed 0.125 gallons per flush.

☐ **5.303.3.2.2 Floor mounted urinals**. The effective flush volume of floor mounted or other urinals shall not exceed 0.5 gallons per flush.

**5.303.3.3 Showerheads**

☐ **5.303.3.3.1 Single showerhead.** Showerheads shall have a maximum flow rate of not more than 1.8 gallons per minute at 80 psi. Showerheads shall be certified to the performance criteria of the U.S. EPA WaterSense Specifications for showerheads.

☐ **5.303.3.3.2 Multiple showerheads serving one shower**. When a shower is served by more than one showerhead, the combined flow rate of all showerheads and/or other shower outlets controlled by a single valve shall not exceed 1.8 gallons per minute at 80 psi, or the showerhead shall be designed to allow only one shower outlet to be in operation at one time.

**Note:** A hand-held shower shall be considered a showerhead.

**5.303.3.4 Faucets and fountains.**

☐ **5.303.3.4.1 Non-residential lavatory faucets.** Non-residential lavatory faucets shall have a maximum flow rate of not more than 0.5 gallons per minute at 60 psi.

☐ **5.303.3.4.2 Kitchen faucets.** Kitchen faucets shall have a maximum flow rate of not more than 1.8 gallons per minute at 60 psi. Kitchen faucets may temporarily increase the flow above the maximum rate, but not to exceed 2.2 gallons per minute at 60 psi, and must default to a maximum flow rate of 1.8 gallons per minute at 60 psi.

**5.303.3.4.3 Wash fountains.** Wash fountains shall have a maximum flow rate of not more than 1.8 gallons per minute/20 [rim space (inches) at 60 psi].

☐ **5.303.3.4.4 Metering faucets.** Metering faucets shall not deliver more than 0.20 gallons per cycle.

☐ **5.303.3.4.5 Metering faucets for wash fountains.** Metering faucets for wash fountains shall have a maximum flow rate of not more than 0.20 gallons per cycle/20 [rim space (inches) at 60 psi].

**Note:** Where complying faucets are unavailable, aerators or other means may be used to achieve reduction.

☒ **5.303.6 Standards for plumbing fixtures and fittings.** Plumbing fixtures and fittings shall be installed in accordance with the *California Plumbing Code*, and shall meet the applicable standards referenced in Table 1701.1 of the *California Plumbing Code* and in Chapter 6 of this code**.**





**SECTION 5.304 – OUTDOOR WATER USE**

**5.304.6 Outdoor potable water use in landscape areas.** For public schools and community colleges, landscape projects as described in Sections 5.304.6.1 and 5.304.6.2 shall comply with the California Department of Water Resources Model Water Efficient Landscape Ordinance (MWELO) commencing with Section 490 of Chapter 2.7, Division 2, Title 23, *California Code of Regulations*, except that the Evapotranspiration Adjustment Factor (ETAF) shall be 0.65 with an additional water allowance for special landscape areas (SLA) of 0.35.

**Exception:** Any project with an aggregate landscape area of 2,500 square feet or less may comply with the prescriptive measures contained in Appendix D of the MWELO.

☐ **5.304.6.1 Newly constructed landscapes.** New construction projects with an aggregate landscape area equal to or greater than 500 square feet.

☐ **5.304.6.2 Rehabilitated landscapes.** Rehabilitated landscape projects with an aggregate landscape area equal to or greater than 1,200 square feet.

### DIVISION 5.4 – MATERIAL CONSERVATION AND RESOURCE EFFICIENCY

**SECTION 5.407 – WATER RESISTANCE AND MOISTURE MANAGEMENT**

☐ **5.407.1 Weather protection.** Provide a weather-resistant exterior wall and foundation envelope as required by *California Building Code,* Section 1402.2 (Weather Protection), manufacturer's installation instructions, or local ordinance, whichever is more stringent.

**5.407.2 Moisture control.** Employ moisture control measures by the following methods:

☐ **5.407.2.1 Sprinklers.** Design and maintain landscape irrigation systems to prevent spray on structures.

**5.407.2.2 Entries and openings.** Design exterior entries and/or openings subject to foot traffic or wind-driven rain to prevent water intrusion into buildings as follows:

☒ **5.407.2.2.1 Exterior door protection.** Primary exterior entries shall be covered to prevent water intrusion by using nonabsorbent floor and wall finishes within at least 2 feet around and perpendicular to such openings plus at least one of the following:

1. An installed awning at least 4 feet in depth.
2. The door is protected by a roof overhang at least 4 feet in depth.
3. The door is recessed at least 4 feet.
4. Other methods which provide equivalent protection.

☒ **5.407.2.2.2 Flashing.** Installed flashings integrated with a drainage plane.

**SECTION 5.408 – CONSTRUCTION WASTE REDUCTION, DISPOSAL AND RECYCLING**

**5.408.1 Construction waste management.** Recycle and/or salvage for reuse a minimum of 65 percent of the nonhazardous construction and demolition waste in accordance with Section 5.408.1.1, 5.408.1.2 or 5.408.1.3; or meet a local construction and demolition waste management ordinance, whichever is more stringent.

☒ **5.408.1.1 Construction waste management plan.** Where a local jurisdiction does not have a construction and demolition waste management ordinance that is more stringent, submit a construction waste management plan that:

1. Identifies the construction and demolition waste materials to be diverted from disposal by efficient usage, recycling, reuse on the project or salvage for future use or sale.





2. Determines if construction and demolition waste materials will be sorted on-site (source-separated) or bulk mixed (single stream).
3. Identifies diversion facilities where construction and demolition waste material collected will be taken.
4. Specifies that the amount of construction and demolition waste materials diverted shall be calculated by weight or volume, but not by both.

☐ **5.408.1.2 Waste management company.** Utilize a waste management company that can provide verifiable documentation that the percentage of construction and demolition waste material diverted from the landfill complies with this section.

**Note:** The owner or contractor shall make the determination if the construction and demolition waste material will be diverted by a waste management company.

**Exceptions to Sections 5.408.1.1 and 5.408.1.2:**

1. Excavated soil and land-clearing debris.
2. Alternate waste reduction methods developed by working with local agencies if diversion or recycle facilities capable of compliance with this item do not exist.
3. Demolition waste meeting local ordinance or calculated in consideration of local recycling facilities and markets.

☐ **5.408.1.3 Waste stream reduction alternative.** The combined weight of new construction disposal that does not exceed two pounds per square foot of building area may be deemed to meet the 65 percent minimum requirement as approved by the enforcing agency.

☐ **5.408.1.4 Documentation.** Documentation shall be provided to the enforcing agency which demonstrates compliance with Section 5.408.1.1 through 5.408.1.3. The waste management plan shall be updated as necessary and shall be accessible during construction for examination by the enforcing agency.

**Notes:**

1. Sample forms found in "A Guide to the California Green Building Standards Code (Nonresidential)" located at www.bsc.ca.gov/Home/CALGreen.aspx may be used to assist in documenting compliance with the waste management plan.
2. Mixed construction and demolition debris (C&D) processors can be located at the California Department of Resources Recycling and Recovery (CalRecycle).

**SECTION 5.410 – BUILDING MAINTENANCE AND OPERATION**

☐ **5.410.1 Recycling by occupants.** Provide readily accessible areas that serve the entire building and are identified for the depositing, storage and collection of non-hazardous materials for recycling, including (at a minimum) paper, corrugated cardboard, glass, plastics, organic waste, and metals or meet a lawfully enacted local recycling ordinance, if more restrictive.

**Exception:** Rural jurisdictions that meet and apply for the exemption of Public Resources Code 42649.82 (a)(2)(A) et seq. will also be exempt from the organics waste portion of this section.

☐ **5.410.1.2 Sample ordinance.** Space allocation for recycling areas shall comply with Chapter 18, Part 3, Division 30 of the *Public Resources Code.* Chapter 18 is known as the California Solid Waste Reuse and Recycling Access Act of 1991 (Act).

**Note:** A sample ordinance for use by local agencies may be found in Appendix A of the document at the CalRecycle's website.

### DIVISION 5.5 ENVIRONMENTAL QUALITY





**SECTION 5.504.1 – POLLUTANT CONTROL**

☒ **5.504.3 Covering of duct openings and protection of mechanical equipment during construction.** At the time of rough installation and during storage on the construction site until final startup of the heating, cooling and ventilating equipment, all duct and other related air distribution component openings shall be covered with tape, plastic, sheet metal or other methods acceptable to the enforcing agency to reduce the amount of dust, water and debris which may enter the system.

**5.504.4 Finish material pollutant control.** Finish materials shall comply with Sections 5.504.4.1 through 5.504.4.6.

☒ **5.504.4.1 Adhesives, sealants, and caulks.** Adhesives, sealants, and caulks used on the project shall meet the requirements of the following standards:

1. Adhesives, adhesive bonding primers, adhesive primers, sealants, sealant primers, and caulks shall comply with local or regional air pollution control or air quality management district rules where applicable, or SCAQMD Rule 1168 VOC limits, as shown in Tables 5.504.4.1 and 5.504.4.2. Such products also shall comply with the Rule 1168 prohibition on the use of certain toxic compounds (chloroform, ethylene dichloride, methylene chloride, perchloroethylene, and trichloroethylene), except for aerosol products as specified in subsection 2, below.
2. Aerosol adhesives, and smaller unit sizes of adhesives, and sealant or caulking compounds (in units of product, less packaging, which do not weigh more than one pound and do not consist of more than 16 fluid ounces) shall comply with statewide VOC standards and other requirements, including prohibitions on use of certain toxic compounds, of *California Code of Regulations*, Title 17, commencing with Section 94507.

**TABLE 5.504.4.1 – ADHESIVE VOC LIMIT**
(See CALGreen for TABLE)

**TABLE 5.504.4.2 – SEALANT VOC LIMIT**
(See CALGreen for TABLE)

☒ **5.504.4.3 Paints and coatings.** Architectural paints and coatings shall comply with VOC limits in Table 1 of the ARB Architectural Coatings Suggested Control Measure, as shown in Table 5.504.4.3, unless more stringent local limits apply. The VOC content limit for coatings that do not meet the definitions for the specialty coatings categories listed in Table 5.504.4.3, shall be determined by classifying the coating as a Flat, Nonflat, or Nonflat-High Gloss coating, based on its gloss, as defined in Subsections 4.21, 4.36 and 4.37 of the 2007 California Air Resources Board, Suggested Control Measure, and the corresponding Flat, Nonflat or Nonflat-High Gloss VOC limit in Table 5.504.4.3 shall apply.

**TABLE 5.504.4.3 – VOC CONTENT LIMITS FOR ARCHITECTURAL COATINGS**
(See CALGreen for TABLE)

☒ **5.504.4.3.1 Aerosol paints and coatings.** Aerosol paints and coatings shall meet the PWMIR Limits for ROC in Section 94522(a)(3) and other requirements, including prohibitions on use of certain toxic compounds and ozone depleting substances, in Sections 94522(c)(2) and (d)(2) of *California Code of Regulations*, Title 17, commencing with Section 94520; and in areas under the jurisdiction of the Bay Area Air Quality Management District additionally comply with the percent VOC by weight of product limits of Regulation 8 Rule 49.

**5.504.4.3.2 Verification.** Verification of compliance with this section shall be provided at the request of the enforcing agency. Documentation may include, but is not limited to, the following:

1. Manufacturer's product specification.





2. Field verification of on-site product containers.

☒ **5.504.4.4 Carpet systems.** All carpet installed in the building interior shall meet at least one of the following testing and product requirements:

1. Carpet and Rug Institute's Green Label Plus Program;
2. Compliant with the VOC-emission limits and testing requirements specified in the California Department of Public Health Standard Method for the Testing and Evaluation of Volatile Organic Chemical Emissions from Indoor Sources Using Environmental Chambers, Version1.1, February 2010 (also known as CDPH Standard Method V1.1 or *Specification 01350*);
3. NSF/ANSI 140 at the Gold level or higher;
4. Scientific Certifications Systems Sustainable Choice; or
5. Compliant with the Collaborative for High Performance Schools California (CA-CHPS) Criteria 2014 and listed in the CHPS High Performance Product Database.

☒ **5.504.4.4.1 Carpet cushion.** All carpet cushion installed in the building interior shall meet the requirements of the Carpet and Rug Institute's Green Label program**.**

☒ **5.504.4.4.2 Carpet adhesive.** All carpet adhesive shall meet the requirements of Table 5.504.4.1.

☐ **5.504.4.5 Composite wood products.** Hardwood plywood, particleboard, and medium density fiberboard composite wood products used on the interior or exterior of the building shall meet the requirements for formaldehyde as specified in ARB's Air Toxics Control Measure (ATCM) for Composite Wood (17 CCR 93120 et seq.). Those materials not exempted by the ATCM must meet the specified emission limits as shown in Table 5.504.4.5.

**TABLE 5.504.4.5 – FORMALDEHYDE LIMITS**
(See CALGreen for TABLE)

☒ **5.504.4.6 Resilient flooring systems.** For 80 percent of floor area receiving resilient flooring, installed resilient flooring shall meet at least one of the following:

1. Certified under the Resilient Floor Covering Institute (RFCI) FloorScore program;
2. Compliant with the VOC-emission limits and testing requirements specified in the California Department of Public Health's 2010 Standard Method for the Testing and Evaluation Chambers, Version 1.1, February 2010;
3. Compliant with the Collaborative for High Performance Schools California (CA-CHPS) Criteria 2014 and listed in the CHPS High Performance Product Database; or
4. Products certified under the UL GREENGUARD Gold (formerly the Greenguard Children & Schools program).

☒ **5.504.5.3 Filters.** In mechanically ventilated buildings, provide regularly occupied areas of the building with air filtration media for outside and return air prior to occupancy that provides at least a Minimum Efficiency Reporting Value (MERV) of 13. MERV 13 filters shall be installed prior to occupancy and recommendations for maintenance with filters of the same value shall be included in the operation and maintenance manual.

**Exception:** Existing mechanical equipment.

**5.504.5.3.1 Labeling.** Installed filters shall be clearly labeled by the manufacturer indicating the MERV rating.





**SECTION 5.505 – INDOOR MOISTURE CONTROL**

☒ **5.505.1 Indoor moisture control.** Buildings shall meet or exceed the provisions of *California Building Code*, CCR, Title 24, Part 2, Sections 1202 (Ventilation) and Chapter 14 (Exterior Walls). For additional measures see Section 5.407.2 of this code.

**SECTION 5.506 – INDOOR AIR QUALITY**

☒ **5.506.1 Outside air delivery.** For mechanically or naturally ventilated spaces in buildings, meet the minimum requirements of Section 120.1 (Requirements for Ventilation) of the *California Energy Code*, or the applicable local code, whichever is more stringent, and Division 1, Chapter 4 of CCR, Title 8.

**SECTION 5.507 – ENVIRONMENTAL COMFORT**

☐ **5.507.4 Acoustical control.** Employ building assemblies and components with Sound Transmission Class (STC) values determined in accordance with ASTM E 90 and ASTM E 413 or Outdoor–Indoor Sound Transmission Class (OITC) determined in accordance with ASTM E 1332, using either the prescriptive or performance method in Section 5.507.4.1 or 5.507.4.2.

**Exception:** Buildings with few or no occupants or where occupants are not likely to be affected by exterior noise, as determined by the enforcement authority, such as factories, stadiums, storage, enclosed parking structures and utility buildings.

**Exception: [DSA-SS]** For public schools and community colleges, the requirement of this section and all subsections apply only to new construction.

☐ **5.507.4.1 Exteriors noise transmission, prescriptive method.** Wall and roof-ceiling assemblies exposed to the noise source making up the building or addition envelope or altered envelope shall meet a composite STC rating of at least 50 or a composite OITC rating of no less than 40, with exterior windows of a minimum STC of 40 or OITC of 30 in the following locations:

1. Within the 65 CNEL noise contour of an airport.

**Exceptions:**

1. $L_{dn}$ or CNEL for military airports shall be determined by the facility Air Installation Compatible Land Use Zone (AICUZ) plan.
2. $L_{dn}$ or CNEL for other airports and heliports for which a land use plan has not been developed shall be determined by the local general plan noise element.

2. Within the 65 CNEL or $L_{dn}$ noise contour of a freeway or expressway, railroad, industrial source or fixed-guideway source as determined by the Noise Element of the General Plan.

☐ **5.507.4.1.1 Noise exposure where noise contours are not readily available.** Buildings exposed to a noise level of 65 $dBL_{eq}$-1-hr during any hour of operation shall have building, addition or alteration exterior wall and roof-ceiling assemblies exposed to the noise source meeting a composite STC rating of at least 45 (or OITC 35), with exterior windows of a minimum STC of 40 (or OITC 30).

☐ **5.507.4.2 Performance method.** For buildings located as defined in Section 5.507.4.1 or 5.507.4.1.1, wall and roof-ceiling assemblies exposed to the noise source making up the building or addition envelope or altered envelope shall be constructed to provide an interior noise environment attributable to exterior sources that does not exceed an hourly equivalent noise level ($L_{eq}$-1Hr) of 50 dBA in occupied areas during any hour of operation.

☐ **5.507.4.2.1 Site features.** Exterior features such as sound wall or earth berms may be utilized as appropriate to the building, addition or alteration project to mitigate sound migration to the interior.





☐ **5.507.4.2.2. Documentation of compliance.** An acoustical analysis documenting complying interior sound levels shall be prepared by personnel approved by the architect or engineer of record.

☒ **5.507.4.3 Interior sound transmission.** Wall and floor-ceiling assemblies separating tenant spaces and tenant spaces and public places shall have an STC of at least 40.

**Note:** Examples of assemblies and their various STC rating may be found at the California Office of Noise Control: www. https://www.tsib.org/files/STC_IIC_Ratings.pdf

**SECTION 5.508 – OUTDOOR AIR QUALITY**

**5.508.1 Ozone depletion and greenhouse gas reductions.** Installations of HVAC, refrigeration and fire suppression equipment shall comply with Sections 5.508.1.1 and 5.508.1.2.

☐ **5.508.1.1 Chlorofluorocarbons (CFCs).** Install HVAC, refrigeration and fire suppression equipment that do not contain CFCs.

A DSA Project Submittal Guideline is a compilation of recommendations based on code, referenced standards, DSA bulletin/policy/procedure/interpretation documents, and DSA practices. These guidelines are intended to give the design profession helpful information and insight into DSA's project application, submittal, and review processes. Guidelines are provided by DSA in support of DSA's goals of providing stakeholders information they need to facilitate working smoothly with DSA, and to help standardize practices among the four DSA Regional Offices.

Compliance with a Guideline does not assure that a project is complete or that it adheres to the requirements of the California Building Standards Code (Title 24 of the California Code of Regulations) or all DSA requirements. Additional information may be required, depending on project complexity or site conditions. For complete submittal requirements see forms *DSA 1: Application for Approval of Plans and Specifications* and *DSA 3: Project Submittal Checklist.*



STATE AGENCY APPROVAL

IDENTIFICATION STAMP
DIV. OF THE STATE ARCHITECT
APP. 04-124098 INC:
REVIEWED FOR
SS ☑ FLS ☑ ACS ☑
DATE: 11/14/24

15345 FAIRFIELD RANCH ROAD, SUITE #160, CHINO, CA 91709
OFFICE: (909) 740-3120, FAX: (909) 726-9470
WEBSITE: WWW.SKCCOMPANY.COM
MANUFACTURER #MF1279666 DEALER # DL1279666
GC LIC # 992118 SBE CERTIFIED

ALL DESIGNS INDICATED ON THESE PLANS/DRAWINGS ARE PROPERTY OF SKC, INC AND ARE FOR THE USE BY SKC IN THE SPECIFIED JOB ONLY. THEY SHALL NOT BE USED AND/OR DUPLICATED OR TRANSMITTED IN ANY FORM, FOR ANY PURPOSE WITHOUT THE PRIOR WRITTEN CONSENT OF SKC, INC. ANY UNAUTHORIZED USE OF THESE PLANS SHALL SUBJECT THE OWNER OF SAID PROPERTY TO LIQUIDATED DAMAGES OF $75,000.00. THESE PLANS ARE PROTECTED UNDER THE PROVISIONS OF THE 1976 COPYRIGHT ACT COPYRIGHT SKC, © ALL RIGHTS RESERVED.

DISTRICT/CUSTOMER NAME: NEXTMOD

SCHOOL/SITE NAME: STOCKPILE

SHEET TITLE:

CAL GREEN
MANDATORY MEASURES

PRE-CHECK (PC) DOCUMENT
CODE: 2022 CBC
A SEPARATE PROJECT APPLICATION FOR
CONSTRUCTION IS REQUIRED

APPROVED
DIV. OF THE STATE ARCHITECT
APP: 04-122454 PC
REVIEWED FOR
SS ☑ FLS ☑ ACS ☑ CG ☑
DATE: 11/14/2023

PROFESSIONAL OF RECORD ON PC

ORION
Structural Engineering, Inc.
11305 RANCHO BERNARDO RD
SUITE 121
SAN DIEGO CA. 92127
PHONE (858) 679-1974

REGISTERED PROFESSIONAL ENGINEER
RYAN J. OVER
No. S 4437
EXP. 12/31/24
STRUCTURAL
STATE OF CALIFORNIA

FIRM: Orion Structural Engineering, Inc.
ADDRESS: 11305 Rancho Bernardo Road Ste 121
CITY: San Diego, CA
PHONE: 858-679-1974

PROJECT SPECIFIC PROFESSIONAL OF RECORD

FIRM:
ADDRESS:
CITY:
PHONE:

REVISIONS

1 -
2 -
3 -
4 -
5 -

| | |
|---|---|
| PROJECT NO.: | 00-0000 |
| DRAFTER: | 00 |
| SCALE: | AS NOTED |
| DATE: | 00-00-00 |

SHEET NUMBER

**A0.9**

10/31/2023 11:46:22 AM

## Construction Waste Management (CWM) Plan

Note: This sample form may be used to assist in documenting compliance with the waste management plan.

Project Name: _____
Job #: _____
Project Manager: _____
Waste Hauling Company: _____
Contact Name: _____

All Subcontractors shall comply with the project's Construction Waste Management Plan.
All Subcontractor foremen shall sign the CWM Plan Acknowledgment Sheet.

Subcontractors who fail to comply with the Waste Management Plan will be subject to backcharges or withholding of payment, as deemed appropriate. For instance, Subcontractors who contaminate debris boxes that have been designated for a single material type will be subject to backcharge or withheld payment, as deemed appropriate.

1. The project's overall rate of waste diversion will be 65 %.
2. This project shall generate the least amount of waste possible by planning and ordering carefully, following all proper storage and handling procedures to reduce broken and damaged materials and reusing materials whenever possible. The majority of the waste that is generated on this jobsite will be diverted from the landfill and recycled for other use.
3. Spreadsheet 1, enclosed, identifies the waste materials that will be generated on this project, the diversion strategy for each waste type and the anticipated diversion rate.
4. Waste prevention and recycling activities will be discussed at the beginning of weekly subcontractor meetings. As each new subcontractor comes on-site, the WMP Coordinator will present him/her with a copy of the CWM Plan and provide a tour of the jobsite to identify materials to be salvaged and the procedures for handling jobsite debris. All Subcontractor foremen will acknowledge in writing that they have read and will abide by the CWM Plan. Subcontractor Acknowledgment Sheet enclosed. The CWM Plan will be posted at the jobsite trailer.
5. Salvage: Excess materials that cannot be used in the project, nor returned to the vendor, will be offered to site workers, the owner, or donated to charity if feasible.
6. [HAULING COMPANY] will provide a commingled drop box at the jobsite for most of the construction waste. These commingled drop boxes will be taken to [Sorting Facility Name and Location]. The average diversion rate for commingled waste will be ____%. As site conditions permit, additional drop boxes will be used for particular phases of construction (e.g., concrete and wood waste) to ensure the highest waste diversion rate possible.
7. In the event that the waste diversion rate achievable via the strategy described in (6) above, is projected to be lower than what is required, then a strategy of source-separated waste diversion and/or waste stream reduction will be implemented. Source separated waste refers to jobsite waste that is not commingled but is instead allocated to a debris box designated for a single material type, such as clean wood or metal.

   **Notes:**
   1. Waste stream reduction refers to efforts taken by the builder to reduce the amount of waste generated by the project to below four (4) pounds per square foot of building area.
   2. When using waste stream reduction measures, the gross weight of the product is subtracted from a base weight of four (4) pounds per square foot of building area. This reduction is considered additional diversion and can be used in the waste reduction percentage calculations.
8. [HAULING COMPANY] will track and calculate the quantity (in tons) of all waste leaving the project and calculate the waste diversion rate for the project. [HAULING COMPANY] will provide Project Manager with an updated monthly report on gross weight hauled and the waste diversion rate being achieved on the project. [HAULING COMPANY's] monthly report will track separately the gross weights and diversion rates for commingled debris and for each source-separated waste stream leaving the project. In the event that [HAULING COMPANY] does not service any or all of the debris boxes on the project, the [HAULING COMPANY] will work with the responsible parties to track the material type and weight (in tons) in such debris boxes in order to determine waste diversion rates for these materials.
9. In the event that Subcontractors furnish their own debris boxes as part of their scope of work, such Subcontractors shall not be excluded from complying with the CWM Plan and will provide [HAULING COMPANY] weight and waste diversion data for their debris boxes.
10. In the event that site use constraints (such as limited space) restrict the number of debris boxes that can be used for collection of designated waste the project Superintendent will, as deemed appropriate, allocate specific areas onsite where individual material types are to be consolidated. These collection points are not to be contaminated with non-designated waste types.
11. Debris from jobsite office and meeting rooms will be collected by [DISPOSAL SERVICE COMPANY]. [DISPOSAL SERVICE COMPANY] will, at a minimum, recycle office paper, plastic, metal and cardboard.





## Construction Waste Management (CWM) Worksheet

Note: This sample form may be used to assist in documenting compliance with the waste management plan.

**Project Name:** _____

**Job Number:** _____

**Project Manager:** _____

**Waste Hauling Company:** _____

**Construction Waste Management (CWM) Plan**

| WASTE MATERIAL TYPE | DIVERSION METHOD: COMMINGLED AND SORTED OFF SITE | DIVERSION METHOD: SOURCE SEPARATED ON SITE | PROJECTED DIVERSION RATE |
|---|---|---|---|
| Asphalt | | | |
| Concrete | | | |
| Shotcrete | | | |
| Metals | | | |
| Wood | | | |
| Rigid insulation | | | |
| Fiberglass insulation | | | |
| Acoustic ceiling tile | | | |
| Gypsum drywall | | | |
| Carpet/carpet pad | | | |
| Plastic pipe | | | |
| Plastic buckets | | | |
| Plastic | | | |
| Hardiplank siding and boards | | | |
| Glass | | | |
| Cardboard | | | |
| Pallets | | | |
| Job office trash, paper, glass & plastic bottles, cans, plastic | | | |
| Alkaline and rechargeable batteries, toner cartridges, and electronic devices | | | |
| Other: | | | |
| Other: | | | |
| Other: | | | |
| Other: | | | |





## Construction Waste Management (CWM) Acknowledgment

Note: This sample form may be used to assist in documenting compliance with the waste management plan.

**Project Name:** _____

**Job Number:** _____

**Project Manager:** _____

**Waste Hauling Company:** _____

**CWM Plan Acknowledgment**

**The Foreman for each new Subcontractor that comes on site is to receive a copy of the Construction Waste Management Plan and complete this Acknowledgment Form.**

I have read the Waste Management Plan for the project; I understand the goals of this plan and agree to follow the procedures described in this plan.

| DATE | SUBCONTRACTOR COMPANY NAME | FOREMAN NAME | SIGNATURE |
|---|---|---|---|
| | | | |
| | | | |
| | | | |
| | | | |
| | | | |
| | | | |
| | | | |
| | | | |
| | | | |
| | | | |
| | | | |
| | | | |
| | | | |
| | | | |
| | | | |
| | | | |



STATE AGENCY APPROVAL

IDENTIFICATION STAMP
DIV. OF THE STATE ARCHITECT
APP. 04-124098 INC:
REVIEWED FOR
SS ☑ FLS ☑ ACS ☑
DATE: 11/14/24

SKC COMPANY
15345 FAIRFIELD RANCH ROAD, SUITE #160, CHINO, CA 91709
OFFICE: (909) 740-3120, FAX: (909) 726-9470
WEBSITE: WWW.SKCCOMPANY.COM
MANUFACTURER #MF1279666 DEALER # DL1279666
GC LIC # 992118 SBE CERTIFIED

ALL DESIGNS INDICATED ON THESE PLANS/DRAWINGS ARE PROPERTY OF SKC, INC AND ARE FOR THE USE BY SKC IN THE SPECIFIED JOB ONLY. THEY SHALL NOT BE USED AND/OR DUPLICATED OR TRANSMITTED IN ANY FORM, FOR ANY PURPOSE WITHOUT THE PRIOR WRITTEN CONSENT OF SKC, INC. ANY UNAUTHORIZED USE OF THESE PLANS SHALL SUBJECT THE OWNER OF SAID PROPERTY TO LIQUIDATED DAMAGES OF $75,000.00. THESE PLANS ARE PROTECTED UNDER THE PROVISIONS OF THE 1976 COPYRIGHT ACT COPYRIGHT SKC, © ALL RIGHTS RESERVED.

DISTRICT/CUSTOMER NAME:
NEXTMOD

SCHOOL/SITE NAME:
STOCKPILE

SHEET TITLE:

CONSTRUCTION WASTE MANAGEMENT FORMS

PRE-CHECK (PC) DOCUMENT
CODE: 2022 CBC
A SEPARATE PROJECT APPLICATION FOR CONSTRUCTION IS REQUIRED

APPROVED
DIV. OF THE STATE ARCHITECT
APP: 04-122454 PC
REVIEWED FOR
SS ☑ FLS ☑ ACS ☑ CG ☑
DATE: 11/14/2023

PROFESSIONAL OF RECORD ON PC

ORION
Structural Engineering, Inc.
11305 RANCHO BERNARDO RD
SUITE 121
SAN DIEGO CA 92127
PHONE (858) 679-1974

REGISTERED PROFESSIONAL ENGINEER
RYAN J. DUFF
No. 87437
EXP. 12/31/24
STRUCTURAL
STATE OF CALIFORNIA

FIRM: Orion Structural Engineering, Inc.
ADDRESS: 11305 Rancho Bernardo Road Ste 121
CITY: San Diego, CA
PHONE: 858-679-1974

PROJECT SPECIFIC PROFESSIONAL OF RECORD

FIRM:
ADDRESS:
CITY:
PHONE:

REVISIONS
1 -
2 -
3 -
4 -
5 -

| | |
|---|---|
| PROJECT NO.: | 00-0000 |
| DRAFTER: | 00 |
| SCALE: | AS NOTED |
| DATE: | 00-00-00 |

SHEET NUMBER
A0.10

10/31/2023 11:46:49 AM

REAR

WALL NOTE:
SEE SHEET A0.0 FOR WALL LEGEND

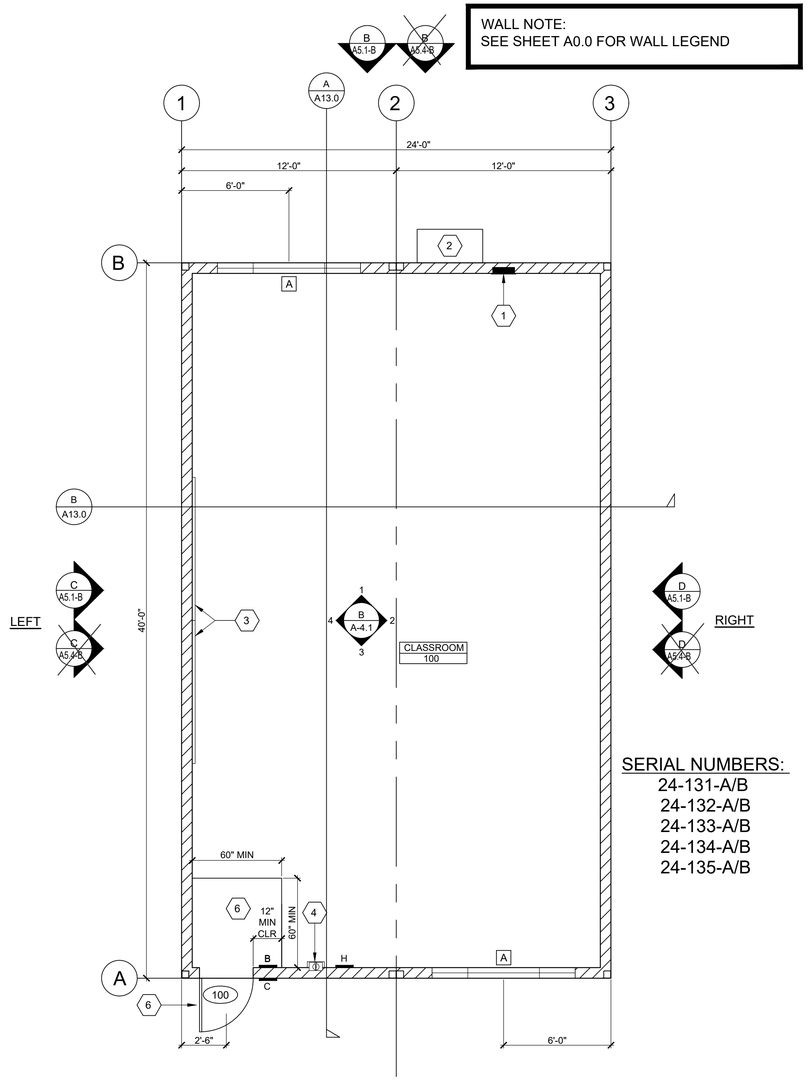


SERIAL NUMBERS:
24-131-A/B
24-132-A/B
24-133-A/B
24-134-A/B
24-135-A/B

MIRROR MIRROR

FRONT

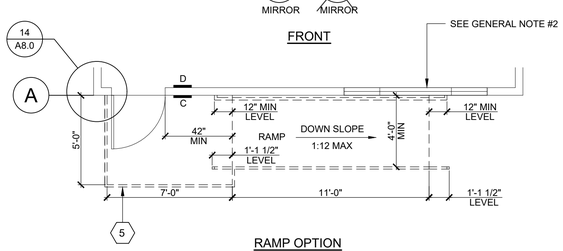


RAMP OPTION

OPTION B (LEFT HAND)

FLOOR PLAN 24'x40'

SCALE: 1/4" = 1'-0"

B

REAR

WALL NOTE:
SEE SHEET A0.0 FOR WALL LEGEND

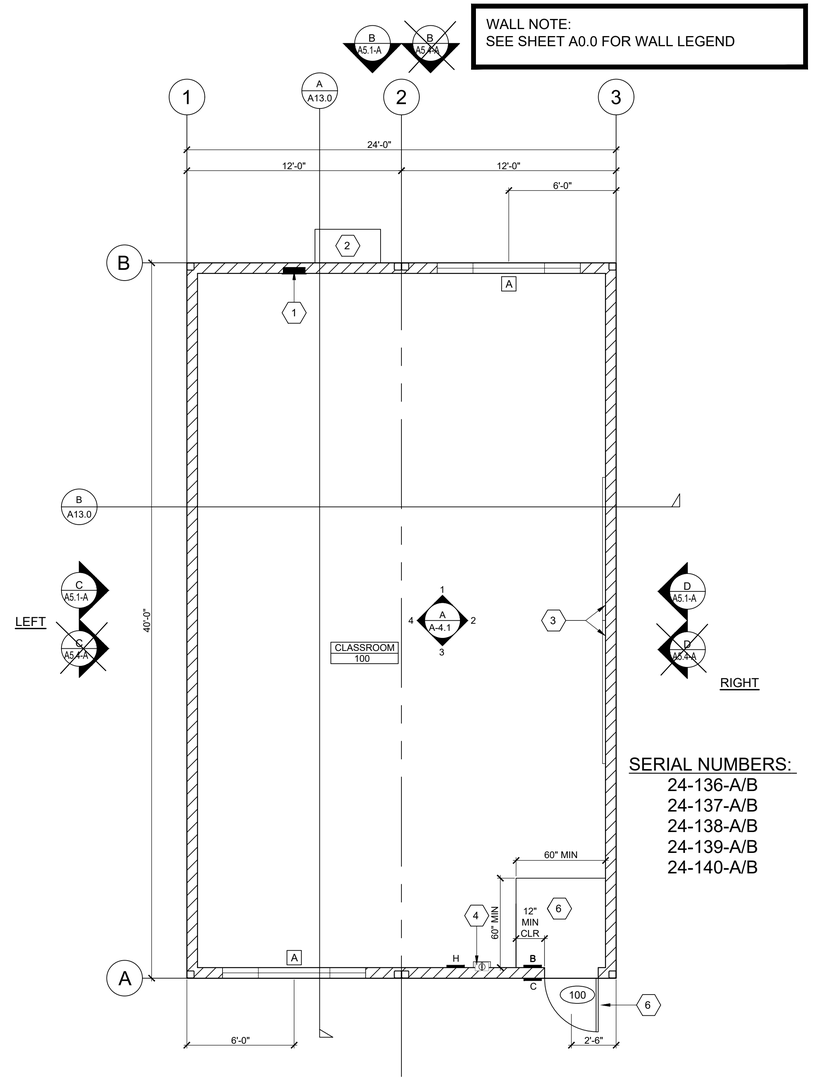


SERIAL NUMBERS:
24-136-A/B
24-137-A/B
24-138-A/B
24-139-A/B
24-140-A/B

FRONT

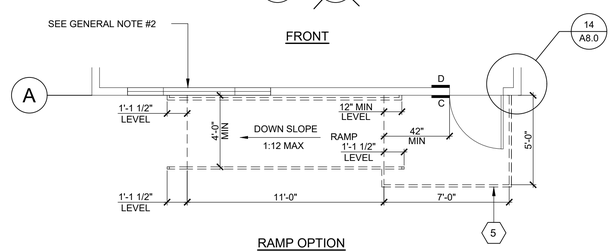


RAMP OPTION

OPTION A (RIGHT HAND)

FLOOR PLAN 24'x40'

SCALE: 1/4" = 1'-0"

A

## KEY NOTES

1. ELECTRICAL PANEL (SEE #10/A8.1 AND ELECTRICAL SHEETS)
2. HEAT PUMP UNIT (SEE MECHANICAL SHEETS)
3. 8'x4' MARKER BOARDS +30" AFF
4. FIRE EXTINGUISHER-5 LB DRY CHEMICAL W/ 2-A:20-B:C UL RATING +48" AFF TO TOP OF HANDLE IN SEMI-RECESSED CABINET WITH 4" MAX PROJECTION, TYP. SEE #4/A8.1 FOR BLOCK-OUT
5. RAMP AND LANDING ARE NOT PART OF THIS PC APPLICATION. RAMP AND LANDING PLAN (OR PC) MUST MEET MINIMUM DIMENSIONS SET FORTH ON ILLUSTRATION BELOW
6. PRIMARY ENTRANCES SHALL REQUIRE A MIN 48" OVERHANG OR AWNING OR RECESSED AREA OR OTHER APPROPRIATE METHOD INCLUDING A 60" X 60" MIN FLOOR AREA USING VCT OR SHEET VINYL WHEN USING CARPET FLOORING PER CALGREEN SECTION 5.407.2.2.1

## SIGNAGE LEGEND

A. = ID SIGN - #1G/A0.4
B. = EXIT TACTILE SIGN - #1C/A0.4
C. = ID SIGN WITH ISA IDENTIFICATION - #1H,G/A0.4
D. = EXIT RAMP DOWN SIGN - #1E/A0.4
~~E. = RESTROOM DOOR SIGN - #1B/A0.4~~
~~F. = RESTROOM WALL SIGN - #1A/A0.4~~
H. = ASSITIVE LISTENING SYSTEM SIGNAGE - #4/A0.4

## OCCUPANT LOAD FORMULA

| | |
|---|---|
| BUILDING SQUARE FOOTAGE: | 960 SQ FT |
| OCCUPANT NET PER TABLE 1004.1.1: | 20 |
| MAXIMUM OCCUPANTS: | 48 |

## GENERAL NOTES

1. SIGNAGE REQUIRED PER APPLICABLE CODES LISTED ON COVER SHEET PROVIDED AND INSTALLED BY DISTRICT ON SITE, SEE ACCESS SHEET
2. WHEN USING A RAMP OPTION AS SHOWN NEXT TO AN ADJACENT WINDOW, IT MUST COMPLY WITH THE ILLUSTRATION ON 20/A8.0. THE FOLLOWING TWO OPTIONS CAN BE CONSIDERED:
   OPTION #1: USE A RAMP CONFIGURATION THAT IS AWAY FROM THE BUILDING
   OPTION #2: THE WINDOW SILL HEIGHT NEEDS TO BE ELEVATED OR LOCATED IN A MANNER TO ACCOMMODATE THE CODE COMPLIANCE ILLUSTRATION MENTIONED ON 20/A8.0. EXAMPLE USE AN 8X3 WINDOW AND SMALLER IN LIEU OF 8X4 WINDOW OR REMOVE THE WINDOW TRIM/MOULDING
3. WHEN RAMPS AND LANDINGS ARE USED, DOWNSPOUT DRAINAGE MUST DIVERT AWAY FROM CLEAR LANDING SPACE OR RAMP
4. ASSISTIVE LISTENING SYSTEM REQUIRED. SUPPLIED AND INSTALLED BY DISTRICT. NOT PART OF THIS PC.

STATE AGENCY APPROVAL

IDENTIFICATION STAMP
DIV. OF THE STATE ARCHITECT
APP. 04-124098 INC:
REVIEWED FOR
SS ☑ FLS ☑ ACS ☑
DATE: 11/14/24


SKC COMPANY
15345 FAIRFIELD RANCH ROAD, SUITE #160, CHINO, CA 91709
OFFICE: (909) 740-3120, FAX: (909) 726-9470
WEBSITE: WWW.SKCCOMPANY.COM
MANUFACTURER #MF1279666 DEALER # DL1279666
GC LIC # 992118 SBE CERTIFIED



ALL DESIGNS INDICATED ON THESE PLANS/DRAWINGS ARE PROPERTY OF SKC, INC AND ARE FOR THE USE BY SKC IN THE SPECIFIED JOB ONLY. THEY SHALL NOT BE USED AND/OR DUPLICATED OR TRANSMITTED IN ANY FORM, FOR ANY PURPOSE WITHOUT THE PRIOR WRITTEN CONSENT OF SKC, INC. ANY UNAUTHORIZED USE OF THESE PLANS SHALL SUBJECT THE OWNER OF SAID PROPERTY TO LIQUIDATED DAMAGES OF $75,000.00. THESE PLANS ARE PROTECTED UNDER THE PROVISIONS OF THE 1976 COPYRIGHT ACT COPYRIGHT SKC, © ALL RIGHTS RESERVED.


DISTRICT/CUSTOMER NAME:
NEXTMOD

SCHOOL/SITE NAME:
STOCKPILE

SHEET TITLE:

FLOOR PLAN
24'X40'

PRE-CHECK (PC) DOCUMENT
CODE: 2022 CBC
A SEPARATE PROJECT APPLICATION FOR CONSTRUCTION IS REQUIRED

APPROVED
DIV. OF THE STATE ARCHITECT
APP: 04-122454 PC
REVIEWED FOR
SS ☑ FLS ☑ ACS ☑ CG ☑
DATE: 11/14/2023

PROFESSIONAL OF RECORD ON PC


ORION
Structural Engineering, Inc.
11305 RANCHO BERNARDO RD
SUITE 121
SAN DIEGO CA, 92127
PHONE: (858) 679-1974
RYAN J. OWEN
S5183
EXP. 12/31/24
STRUCTURAL
STATE OF CALIFORNIA

FIRM: Orion Structural Engineering, Inc.
ADDRESS: 11305 Rancho Bernardo Road Ste 121
CITY: San Diego, CA
PHONE: 858-679-1974


PROJECT SPECIFIC PROFESSIONAL OF RECORD

FIRM:
ADDRESS:
CITY:
PHONE:

REVISIONS

1 -
2 -
3 -
4 -
5 -

| | |
|---|---|
| PROJECT NO.: | 00-0000 |
| DRAFTER: | 00 |
| SCALE: | AS NOTED |
| DATE: | 00-00-00 |

SHEET NUMBER

A1.1

10/31/2023 11:47:08 AM

NOTE:
THIS DETAIL IS FOR THE RESTROOM OPTION ONLY

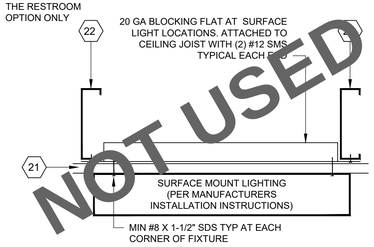


NOT USED

## SURFACE MOUNT LIGHT-STEEL STUD

SCALE: NTS

16

NOTE:
THIS DETAIL IS FOR THE RESTROOM OPTION ONLY

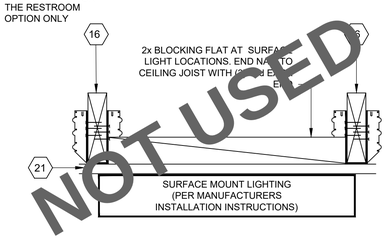


NOT USED

## SURFACE MOUNT LIGHT-WOOD STUD

SCALE: NTS

11

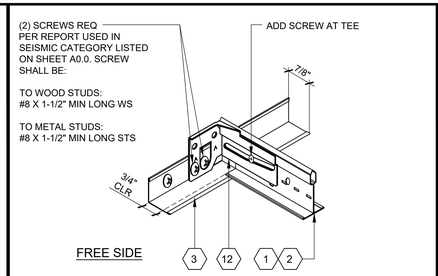


## ARMSTRONG WALL ATTACHMENT SEISMIC CLIP

SCALE: NTS

6

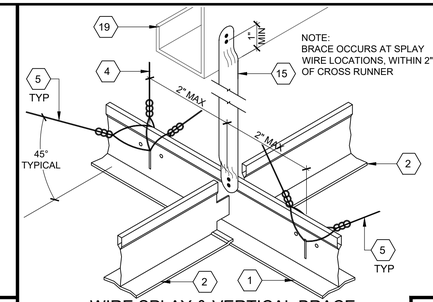


NOTE:
BRACE OCCURS AT SPLAY WIRE LOCATIONS, WITHIN 2" OF CROSS RUNNER

## WIRE SPLAY & VERTICAL BRACE

SCALE: NTS

1

NOTE:
THIS DETAIL IS FOR THE RESTROOM OPTION ONLY

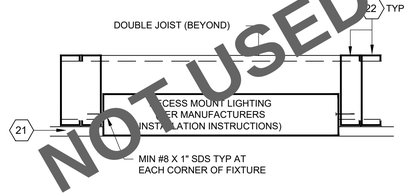


NOT USED

## RECESSED MOUNT LIGHT-STEEL STUD

SCALE: NTS

17

NOTE:
THIS DETAIL IS FOR THE RESTROOM OPTION ONLY

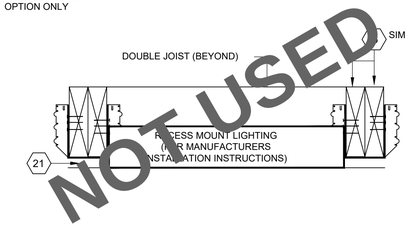


NOT USED

## RECESSED MOUNT LIGHT-WOOD STUD

SCALE: NTS

12

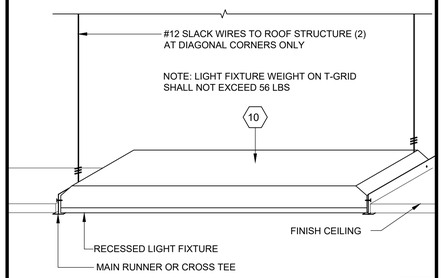


## T-GRID LIGHT FIXTURE DETAIL

SCALE: NTS

7

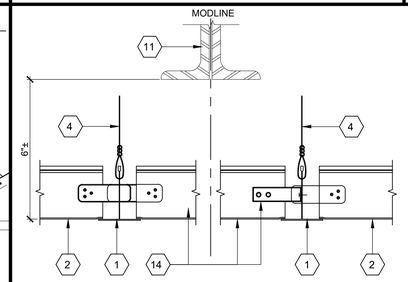


## CEILING GRID AT MODLINE

SCALE: NTS

2

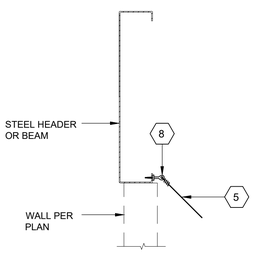


## ALTERNATE SPLAY WIRE ATTACHMENT

SCALE: NTS

18

NOTE:
THIS DETAIL IS FOR THE RESTROOM OPTION ONLY

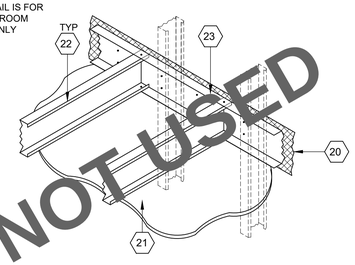


NOT USED

## GYPSUM CEILING-STEEL STUD

SCALE: NTS

13

NOTE:
THIS DETAIL IS FOR THE RESTROOM OPTION ONLY

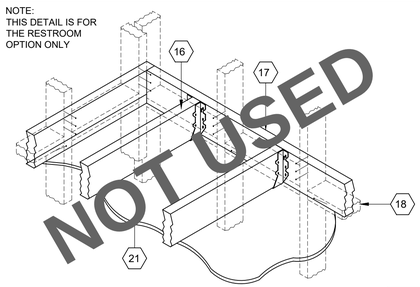


NOT USED

## GYPSUM CEILING-WOOD STUD

SCALE: NTS

8

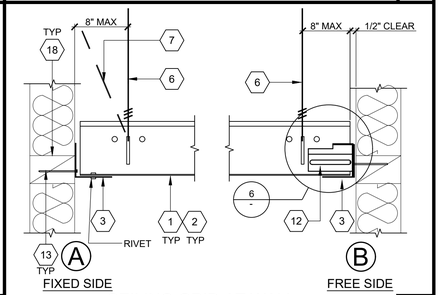


## CEILING GRID AT WALL

SCALE: NTS

3

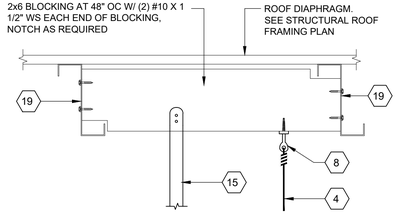


## ALT ATTACHMENTS

SCALE: NTS

19

NOTE:
THIS DETAIL IS FOR THE RESTROOM OPTION ONLY

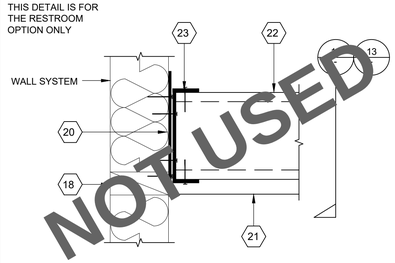


NOT USED

## GYPSUM CEILING-STEEL STUD & JOIST

SCALE: NTS

14

NOTE:
THIS DETAIL IS FOR THE RESTROOM OPTION ONLY

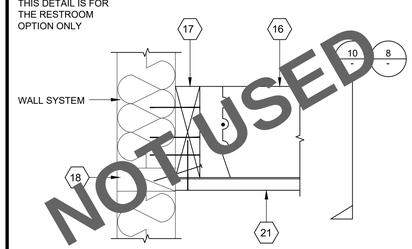


NOT USED

## GYPSUM CEILING-WOOD STUD & JOIST

SCALE: NTS

9

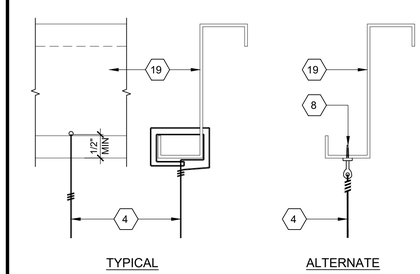


## HANGER WIRE ATTACHMENT

SCALE: NTS

4

NOTE:
THE FIXED SIDE SHALL BE SCREWED INTO WALL POSITIVELY

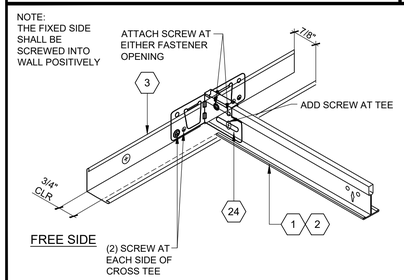


## USG WALL ATTACHMENT SEISMIC CLIP

SCALE: NTS

20

NOTE:
THIS DETAIL IS FOR THE RESTROOM OPTION ONLY

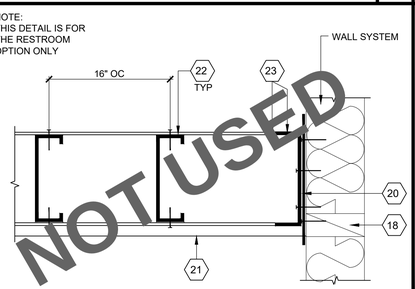


NOT USED

## GYPSUM CEILING SECTION-STEEL STUD

SCALE: NTS

15

NOTE:
THIS DETAIL IS FOR THE RESTROOM OPTION ONLY

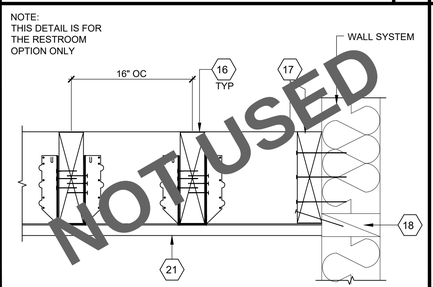


NOT USED

## GYPSUM CEILING SECTION-WOOD STUD

SCALE: NTS

10

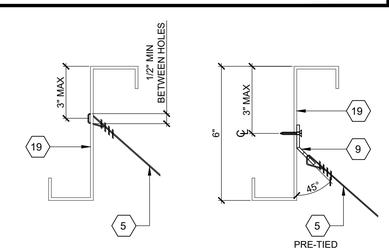


## SPLAY WIRE ATTACHMENT

SCALE: NTS

5

## KEY NOTES

1. MAIN RUNNER: 'ARMSTRONG' 7301 PRELUDE XL SERIES, HEAVY DUTY SPACE AT 4'-0" OC (UNO) WITH HANGER WIRES SPACED AT 4'-0" OC MAX (ICC REPORT #ESR-1308). ALT: 'DONN DXL-26 SIMPLICITEE XL SERIES, HEAVY DUTY (ICC REPORT #ESR-1222)
2. CROSS TEE: 'ARMSTRONG' PRELUDE XL SERIES #7340 AT 48" OR #7328 24" (ICC REPORT #ESR-1308). ALT: 'DONN DXL-216 SIMPLICITEE XL SERIES (ICC REPORT #ESR-1222)
3. WALL ANGLE: 'ARMSTRONG' 7800 WALL MOLDING. ALT: 'DONN' M20 WALL ANGLE. SECURE WALL ANGLE TO WALL WITH MIN #8 X 1-1/2" FH SDS AT 16" OC MAX TO STUD OR BLOCKING
4. TYPICAL HANGER WIRE: 12 GA STEEL WIRE ATTACHED TO STRUCTURE ABOVE AND TO GRID WITH (3) TIGHT TURNS WITHIN 1-1/2" SADDLE TIE (SEE DETAIL 4)
5. TYPICAL SPLAY WIRE: 12 GA STEEL WIRE ATTACHED TO STRUCTURE ABOVE AND TO GRID WITH (4) TIGHT TURNS WITHIN 1-1/2" (SEE DETAIL 1 & 5)
6. AT THE END OF RUNNERS, A HANGER WIRE SHALL BE ATTACHED WITHIN 8" OF ANY WALL OR SOFFIT OR 1/4 OF THE LENGTH OF THE END RUNNER, WHICHEVER IS LEAST, FOR THE PERIMETER OF THE CEILING
7. ALTERNATE HANGER WIRE: HANGER WIRE TO 3"x1/4" EYED SCREW AT TOP PLATE WITH (4) TIGHT TURNS WITHIN 1-1/2" (SEE GENERAL NOTE #1)
8. EYE SCREW 1/4"Ø x 2" LONG ZINC PLATED SELF-TAPPING, SELF DRILLING EYE LAG SCREW ATTACHED TO BEAM LIP
9. 1" X 1" X 2" LONG, 12 GA ANGLE BENT AT A 45° WITH 12 GA WIRE (4 TIGHT TURNS) ATTACH BENT ANGLE TO MEMBER WITH #10 STS
10. LIGHT FIXTURE ATTACHED TO GRID WITH (4) #8 SMS (2) AT EACH END OF FIXTURE AND (2) 12 GA SLACK SAFETY WIRES ATTACHED TO THE FIXTURE AT DIAGONAL CORNERS AND THE ROOF STRUCTURE ABOVE
11. ROOF TRUSS
12. 'ARMSTRONG' BERC-2 CLIP: BEAM ENDING RETAINING CLIP JOINS MAIN BEAM OR CROSS TEE TO WALL MOLDING AND WEB OF GRID (ICC REPORT #ESR-1308)
13. AT FREE SIDE, USE 6d NAIL @ 16" OC INTO WOOD BLOCK/STUD OR #8x2" SMS INTO METAL STUD BLOCK. AT FIXED SIDE, USE MIN #10 X 2" WS AT 16" OC INTO WOOD BLOCK/STUD OR MIN #10 X 2" SMS INTO METAL STUD BLOCK
14. CLOSE OFF CROSS TEE: INSERT ONE END OF CROSS TEE INTO MAIN RUNNER WITH BAYONET CUT OPPOSITE END TO FIT (IF LESS THAN 24") INSERT CROSS TEE ADAPTER CLIP AND SECURE TO CROSS TEE WITH (2) #8 TEK SCREWS AT EACH END
15. VERTICAL BRACE: 1/2" STEEL EMT AT SPLAY WIRE LOCATIONS (MAX LENGTH OF 3'-0") DRILL 1/8" HOLE THRU CONDUIT AT TOP & BOTTOM. ATTACH CONDUIT TO JOIST ABOVE OR TO BLOCKING WITH (2) #12 SCREWS @ TOP & BOTTOM (SEE DETAIL 1)
16. 2x4 HF #2 MIN CEILING JOIST AT 16" OC ATTACH TO LEDGER WITH 'SIMPSON' U-24 JOIST HANGER AT EACH END OF SINGLE JOIST USE 'SIMPSON' U24-2 AT DOUBLE JOIST
17. 2x4 HF #2 MIN CONTINUOUS LEDGER ATTACH TO STUDS WITH (3) 16d NAILS @ 16" OC & (2) 16d NAILS EACH BLOCK
18. FIRE BLOCKING BETWEEN STUDS (BLOCKING SIZE TO MATCH STUD SIZE AND TYPE) AT CEILING HEIGHT
19. ROOF JOIST (SEE ROOF FRAMING SHEET)
20. 6" X 20 GA STRAP ATTACHED TO STUDS WITH (2) #10 STSMS PER STUD
21. GYP BOARD CEILING (SEE FINISH SCHEDULE) USE DRYWALL NAILS FOR WOOD STUDS OR # 8 STS FOR METAL STUDS SPACING TO BE 6" OC MAX EDGES AND 12" OC MAX FIELD
22. C-3 1/2" X 18 GA CEILING JOIST AT 16" OC. ATTACH TRACK TO JOIST WITH #8 STS AT EACH FLANGE OF TRACK
23. C-3 1/2" X 18 GA CONT TRACK. ATTACH TRACK TO WALL STUDS WITH (2) #10 STS AT EACH WALL STUD SPACING
24. ALT: 'DONN' ACM7 WALL ATTACHMENT CLIP (ICC REPORT #ESR-1222)

### ICC REPORT #ESR-1308

A SINGLE 1/8" DIAMETER (3.175 MM) STEEL POP RIVET COMPLYING WITH INDUSTRIAL FASTENER INSITUTE STANDARD IFI-114 MAY BE USED IN LIEU OF BERC-2 AND AL BERC-2 PERIMETER CLIPS TO SECURE THE MAIN RUNNERS AND CROSS RUNNERS TO THE WALL MOLDING ON TWO ADJACENT WALL (ATTACHED WALLS). THE CENTER OF THE RIVET MUST BE 0.25" (6.35 MM) FROM THE EDGE OF THE WALL ANGLE

## GENERAL NOTES

1. IF WALL IS LESS THAN 10 FT TALL & INSTALLED WITH UNFACED FIBER GLASS INSULATION, FIRE BLOCKING IS NOT REQUIRED. REFER TO CBC SECTIONS 718.2.1.2, 718.2.2, AND 718.2.6 (2)

STATE AGENCY APPROVAL

IDENTIFICATION STAMP
DIV. OF THE STATE ARCHITECT
APP. 04-124098 INC:
REVIEWED FOR
SS ☑ FLS ☑ ACS ☑
DATE: 11/14/24


SKC COMPANY
15345 FAIRFIELD RANCH ROAD, SUITE #160, CHINO, CA 91709
OFFICE: (909) 740-3120, FAX: (909) 726-9470
WEBSITE: WWW.SKCCOMPANY.COM
MANUFACTURER #MF1276666 DEALER # DL1279666
GC LIC # 992118 SBE CERTIFIED



ALL DESIGNS INDICATED ON THESE PLANS/DRAWINGS ARE PROPERTY OF SKC, INC AND ARE FOR THE USE BY SKC IN THE SPECIFIED JOB ONLY. THEY SHALL NOT BE USED AND/OR DUPLICATED OR TRANSMITTED IN ANY FORM, FOR ANY PURPOSE WITHOUT THE PRIOR WRITTEN CONSENT OF SKC, INC. ANY UNAUTHORIZED USE OF THESE PLANS SHALL SUBJECT THE OWNER OF SAID PROPERTY TO LIQUIDATED DAMAGES OF $75,000.00. THESE PLANS ARE PROTECTED UNDER THE PROVISIONS OF THE 1976 COPYRIGHT ACT COPYRIGHT SKC, © ALL RIGHTS RESERVED.


DISTRICT/CUSTOMER NAME:
NEXTMOD

SCHOOL/SITE NAME:
STOCKPILE

SHEET TITLE:

# REFLECTED CEILING DETAILS

PRE-CHECK (PC) DOCUMENT
CODE: 2022 CBC
A SEPARATE PROJECT APPLICATION FOR CONSTRUCTION IS REQUIRED

APPROVED
DIV. OF THE STATE ARCHITECT
APP: 04-122454 PC
REVIEWED FOR
SS ☑ FLS ☑ ACS ☑ CG ☑
DATE: 11/14/2023

PROFESSIONAL OF RECORD ON PC


ORION
Structural Engineering, Inc.
11305 RANCHO BERNARDO RD
SUITE 121
SAN DIEGO CA, 92127
PHONE (858) 679-1974
REGISTERED PROFESSIONAL ENGINEER
STRUCTURAL
STATE OF CALIFORNIA
FIRM: Orion Structural Engineering, Inc.
ADDRESS: 11305 Rancho Bernardo Road Ste 121
CITY: San Diego, CA
PHONE: 858-679-1974


PROJECT SPECIFIC PROFESSIONAL OF RECORD

FIRM:
ADDRESS:
CITY:
PHONE:

REVISIONS

1 -
2 -
3 -
4 -
5 -

| | |
|---|---|
| PROJECT NO.: | 00-0000 |
| DRAFTER: | 00 |
| SCALE: | AS NOTED |
| DATE: | 00-00-00 |

SHEET NUMBER

# A2.0a

10/31/2023 11:47:51 AM

**1. CEILING SYSTEM GENERAL NOTES**

1.01 Ceiling system components shall comply with ASTM C635 and Section 5.1 of ASTM E580.

1.02 The ceiling grid system must be rated heavy duty as defined by ASTM C635.

1.03 Ceiling systems. The following ceiling system(s) is/are part of the scope of this project:

Manufacturer: ARMSTRONG ***[RDP to specify]***

Product Name: ***[RDP to specify]***

Evaluation Report Type and Number: ICC REPORT ESR-1308 ***[RDP to specify]***

Main Runner Part, Model, or Catalog Number: 7301 ***[RDP to specify]***

Cross Runner Part, Model, Catalog Number: XL 7340 ***[RDP to specify]***

1.04 Seismic Wall Clip:

Manufacturer's Model: BERC-2 ***[RDP to specify if used]***

1.05 Ceiling panels shall not support any luminaires, air terminals or devices.

1.06 For ceiling installations utilizing acoustical tile panels of mineral or glass fiber, it is not mandatory to provide ¾" clearance between the acoustical tile panels and the wall on the sides of the ceiling which are free to slip. For all other ceiling panel types, provide ¾" clearance between the ceiling panel and the wall on the sides of the ceiling free to slip. Clearance between ceiling grid runners/members and walls shall comply with the details on these drawings regardless of ceiling tile material.

**2. MATERIALS**

2.01 Ceiling wire shall be Class 1 zinc coated (galvanized) carbon steel conforming to ASTM A641. Wire shall be #12 gauge (0.106" diameter) with soft temper and minimum ultimate tensile strength = 70 ksi.

2.02 Galvanized sheet steel (including that used for metal stud and track compression struts/post) shall conform to ASTM A653, or other equivalent sheet steel listed in Section A3.1 of the North American Specification for the Design of Cold-Formed Steel Structural Members, (AISI S100). Material 43 mil (18 gauge) and lighter shall have minimum yield strength of 33 ksi. Material 54 mil (16 gauge) and heavier shall have a minimum yield strength of 50 ksi. ←

2.03 Electrical metallic tube (EMT) shall be ANSI C80.3/UL 797 carbon steel with G90 galvanizing. EMT shall have minimum yield strength ($F_Y$) of 30 ksi and minimum ultimate strength ($F_U$) of 48 ksi.

**3. ATTACHMENT OF HANGER AND BRACING WIRES**

3.01 Separate all ceiling hanger and bracing wires at least 6 inches from all unbraced ducts, pipes, conduit, etc.

3.02 Hanger and bracing wires shall not attach to or bend around obstructions including but not limited to piping, ductwork, conduit and equipment.

| Detail Title: | REV: 09/21/2015<br>REV: 03/2022 | Detail No. |
|---|---|---|
| CEILING NOTES | | 1.00 |





3.03 Hanger wires that are more than one (horizontal) in six (vertical) out of plumb shall have counter-sloping wires.

3.04 Slack safety wires shall be considered hanger wires for installation and testing requirements.

3.05 Hanger and bracing wire anchorage to the structure shall be installed in such a manner that the direction of the anchorage aligns closely with the direction of the wire (e.g., bracing wire ceiling clips must be bent as shown in the details and rotated as required to align closely with the direction of the wire, screw eyes in wood must be installed so they align closely with the direction of the wire, etc.).

**4. FASTENERS AND WELDING**

4.01 Sheet metal screws shall comply with ASTM C1513 and ASME B18.6.3. Penetration of screws through joined material shall not be less than three exposed threads.

~~4.02 Expansion anchors shall be: ***[RDP to indicate manufacturer, product, evaluation report number and test load for each size specified per CBC 1910A.5.4.]***~~

~~4.03 Power-Actuated Fasteners shall be: ***[RDP to indicate manufacturer, product, evaluation report number.]***~~

4.04 If not otherwise specified in the evaluation report, power-actuated fasteners installed in steel shall be installed so the entire pointed end of the fastener is driven through the steel member

4.05 Power-actuated fasteners in concrete or masonry are not permitted for bracing wires.

4.06 Concrete reinforcement and prestressing tendons shall be located by non-destructive means prior to installing post-installed anchors.

4.07 Welding shall be in accordance with AWS D1.3 using E60XX series electrodes.

**5. TESTING**

5.01 All field testing must be performed in the presence of the project inspector.

5.02 Post-installed anchors in concrete used to support hanger wires shall be tested at a frequency of 10 percent. Power-actuated fasteners in concrete shall be field tested for 200 pounds in tension. All other post-installed anchors in concrete shall be tested in accordance with CBC Section 1910A.5.

5.03 Post-installed anchors in concrete used to attach bracing wires shall be tested at a frequency of 50 percent in accordance with CBC Section 1910A.5.

**6. LUMINAIRES**

6.01 All luminaires shall be positively attached to the ceiling suspension systems by mechanical means to resist a horizontal force equal to the weight of the luminaire. A minimum of two screws or approved fasteners are required at each luminaire, per ASTM E580 Section 5.3.1.

6.02 Surface-mounted luminaires shall be attached to the main runner with at least two positive clamping devices. The clamping device shall completely surround the supporting

| Detail Title: | REV: 09/21/2015<br>REV: 03/2022 | Detail No. |
|---|---|---|
| CEILING NOTES | | 1.00 |





ceiling runner and be made of steel with a minimum thickness of #14 gauge. Rotational spring catches do not comply. A #12 gauge slack safety wire shall be connected from each clamping device to the structure above. Provide additional supports when a luminaire is 8 feet or longer or exceeds 56 pounds. Maximum spacing between supports shall not exceed 8 feet.

6.03 Luminaires weighing less than or equal to 10 pounds may be supported directly on the ceiling runners, shall have a minimum of one #12 gauge slack safety wire connected from the fixture housing to the structure above.

6.04 Luminaires weighing greater than 10 pounds but less than or equal to 56 pounds may be supported directly on the ceiling runners, but they shall have a minimum of two #12 gauge slack safety wires connected from the fixture housing at diagonal corners to the structure above.

**Exception:** All luminaires greater than two by four feet weighing less than 56 pounds shall have a #12 gauge slack safety wire at each corner.

6.05 All luminaires weighing greater than 56 pounds shall be independently supported by not less than four taut #12 gauge hanger wires (one at each corner) attached from the fixture housing to the structure above or other approved hangers. The four taut #12 gauge wires or other approved hangers, including their attachment to the structure above, shall be capable of supporting four times the weight of the fixture.

**7. SERVICES WITHIN THE CEILING**

7.01 All flexible sprinkler hose fitting mounting brackets, ceiling-mounted air terminals or other services shall be positively attached to the ceiling suspension systems by mechanical means. Screws or approved fasteners are required. A minimum of two attachments are required at each component.

7.02 Ceiling-mounted air terminals or other services weighing less than or equal to 20 pounds shall have one #12 gauge slack safety wire attached from the terminal or service to the structure above.

7.03 Flexible sprinkler hose fittings, ceiling-mounted air terminals or other services weighing more than 20 pounds but less than or equal to 56 pounds shall have two #12 gauge slack safety wires (at diagonal corners) connected from the terminal or service to the structure above.

7.04 Flexible sprinkler hose fittings, ceiling-mounted air terminals or other services weighing more than 56 pounds shall be supported directly from the structure above by not less than four taut #12 gauge hanger wires attached from the terminal or service to the structure above or other approved hangers.

**8. OTHER DEVICES WITHIN THE CEILING**

8.01 All lightweight miscellaneous devices, such as strobe lights, occupancy sensors, speakers, exit signs, etc., shall be attached to the ceiling grid. In addition, devices weighing more than 10 pounds shall have a #12 gauge slack safety wire anchored to the structure above. Devices weighing more than 20 pounds shall be supported independently from the structure above.

| Detail Title: | REV: 09/21/2015<br>REV: 03/2022 | Detail No. |
|---|---|---|
| CEILING NOTES | | 1.00 |





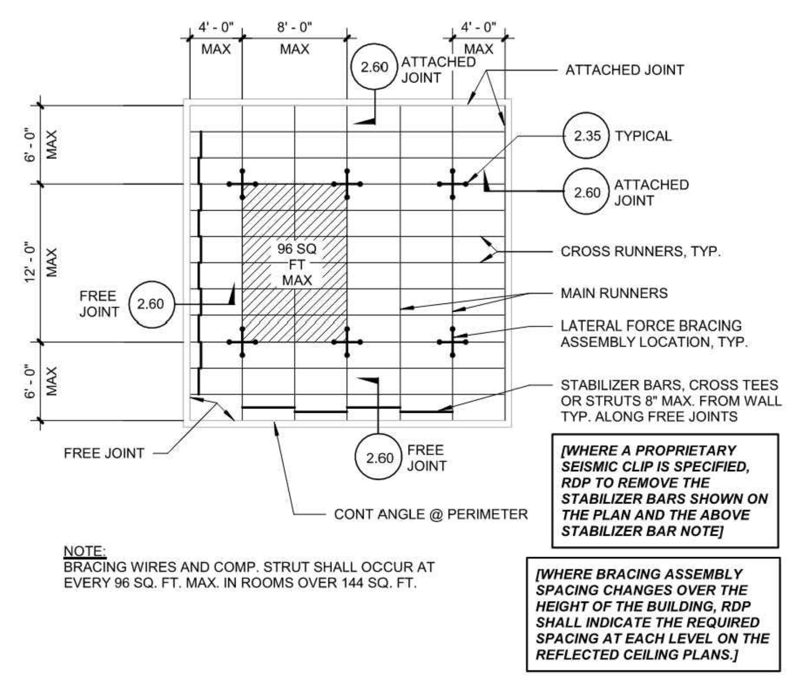


| Detail Title : | REV: 09/21/2015<br>REV: 03/2022 | Detail No. |
|---|---|---|
| TYP. CEILING PLAN FOR 8'-0"x12'-0" BRACE ASSEMBLY SPACING | | 2.11 |



STATE AGENCY APPROVAL

IDENTIFICATION STAMP
DIV. OF THE STATE ARCHITECT
APP. 04-124098 INC:
REVIEWED FOR
SS ☑ FLS ☑ ACS ☑
DATE: 11/14/24

SKC COMPANY
15345 FAIRFIELD RANCH ROAD, SUITE #160, CHINO, CA 91709
OFFICE: (909) 740-3120, FAX: (909) 726-9470
WEBSITE: WWW.SKCCOMPANY.COM
MANUFACTURER #MF1279666 DEALER # DL1279666
GC LIC # 992118 SBE CERTIFIED

ALL DESIGNS INDICATED ON THESE PLANS/DRAWINGS ARE PROPERTY OF SKC, INC AND ARE FOR THE USE BY SKC IN THE SPECIFIED JOB ONLY. THEY SHALL NOT BE USED AND/OR DUPLICATED OR TRANSMITTED IN ANY FORM, FOR ANY PURPOSE WITHOUT THE PRIOR WRITTEN CONSENT OF SKC, INC. ANY UNAUTHORIZED USE OF THESE PLANS SHALL SUBJECT THE OWNER OF SAID PROPERTY TO LIQUIDATED DAMAGES OF $75,000.00. THESE PLANS ARE PROTECTED UNDER THE PROVISIONS OF THE 1976 COPYRIGHT ACT COPYRIGHT SKC, © ALL RIGHTS RESERVED.

DISTRICT/CUSTOMER NAME: NEXTMOD

SCHOOL/SITE NAME: STOCKPILE

SHEET TITLE:

REFLECTED CEILING
DSA NOTES

PRE-CHECK (PC) DOCUMENT
CODE: 2022 CBC
A SEPARATE PROJECT APPLICATION FOR CONSTRUCTION IS REQUIRED

APPROVED
DIV. OF THE STATE ARCHITECT
APP: 04-122454 PC
REVIEWED FOR
SS ☑ FLS ☑ ACS ☑ CG ☑
DATE: 11/14/2023

PROFESSIONAL OF RECORD ON PC

ORION
Structural Engineering, Inc.
11305 RANCHO BERNARDO RD
SUITE 121
SAN DIEGO CA. 92127
PHONE (858) 679-1974

REGISTERED PROFESSIONAL ENGINEER
RYAN J. OVER
No. S 4437
EXP. 12/31/24
STRUCTURAL
STATE OF CALIFORNIA

FIRM: Orion Structural Engineering, Inc.
ADDRESS: 11305 Rancho Bernardo Road Ste 121
CITY: San Diego, CA
PHONE: 858-679-1974

PROJECT SPECIFIC PROFESSIONAL OF RECORD

FIRM:
ADDRESS:
CITY:
PHONE:

REVISIONS

1 -
2 -
3 -
4 -
5 -

| | |
|---|---|
| PROJECT NO.: | 00-0000 |
| DRAFTER: | 00 |
| SCALE: | AS NOTED |
| DATE: | 00-00-00 |

SHEET NUMBER

# A2.0b

10/31/2023 11:48:07 AM

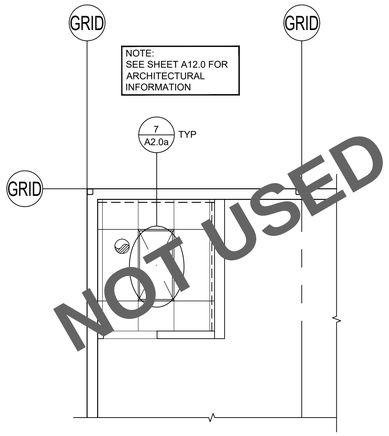


REFLECTED CEILING PLAN FOR OPT RR/JANITOR RM/OFFICE **A**

SCALE: 1/4" = 1'-0"

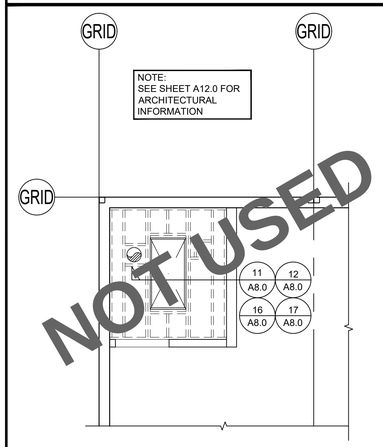


REFLECTED CEILING PLAN FOR OPT RR/JANITOR RM/OFFICE **B**

SCALE: 1/4" = 1'-0"

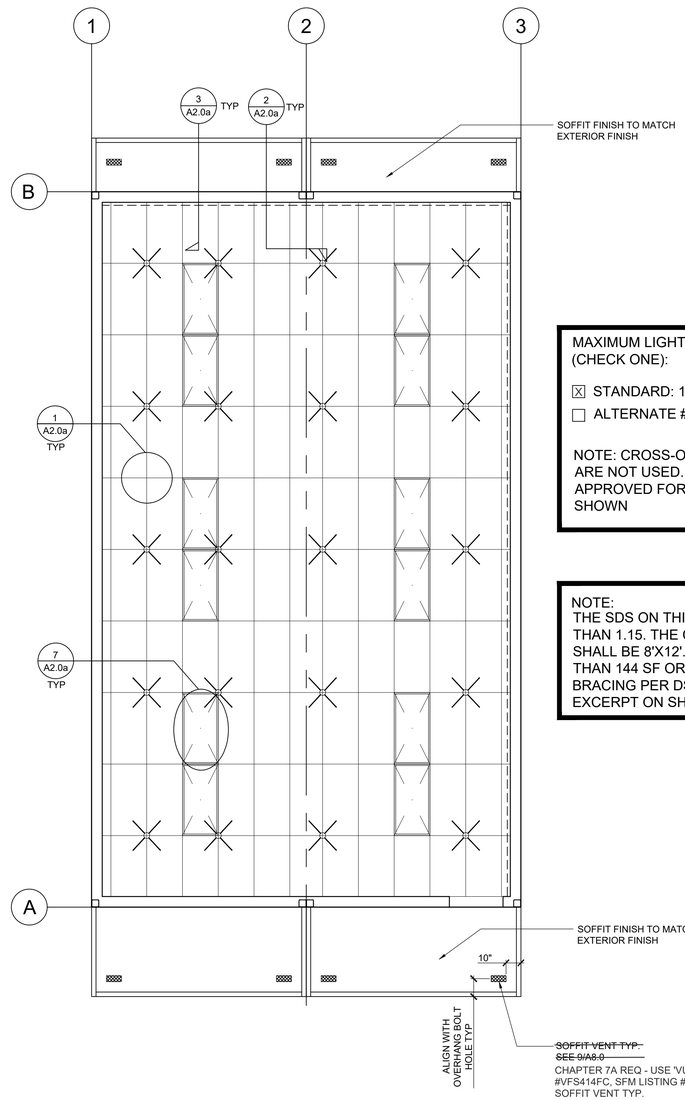


REFLECTED CEILING PLAN

SCALE: 1/4" = 1'-0"

MAXIMUM LIGHTS FOR 960 SF CLASSROOM (CHECK ONE):

☒ STANDARD: 12 LIGHTS AS SHOWN

☐ ALTERNATE #1: 10 LIGHTS

NOTE: CROSS-OUT/'X' OUT LIGHTS THAT ARE NOT USED. THE 24X40 CLASSROOM IS APPROVED FOR A MAXIMUM 12 LIGHTS AS SHOWN

NOTE:
THE SDS ON THIS PC APPLICATION IS MORE THAN 1.15. THE CEILING BRACING SPACING SHALL BE 8'X12'. CEILINGS WITH LESS THAN 144 SF OR LESS DO NOT REQUIRE BRACING PER DSA IR 25-2 SECTION 2.2. SEE EXCERPT ON SHEET A2.0b

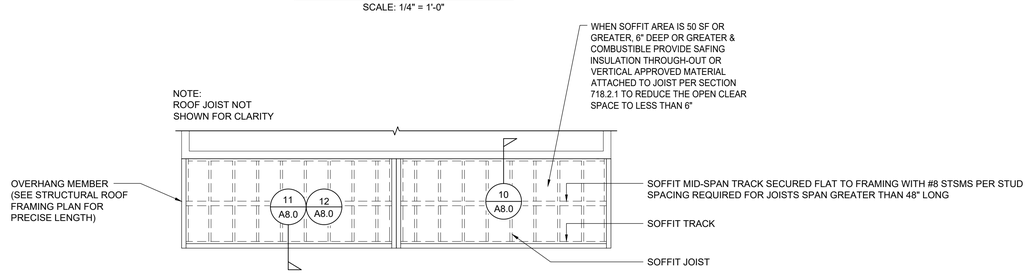


OPTIONAL ENCLOSED SOFFIT OVERHANG FRAMING

SCALE: 1/4" = 1'-0"

## LEGEND

OR — SUPPLY AIR DIFFUSERS NOT SHOWN FOR CLARITY (SEE MECHANICAL PLAN)

2'x4' FLUORESCENT DROP-IN FIXTURE (SEE ELECTRICAL PLAN)

4-WAY SPLAY WIRE SYSTEM

~~OR OR EXHAUST FAN (SEE ELECTRICAL PLAN)~~

48" / 24" — T-GRID CEILING

INDICATES FREE SIDE. ALL OTHER SIDES SHALL BE FIXED (SEE SHEET 3/A2.0 OR 20/A2.0)

INDICATES MAIN RUNNER LOCATIONS

LOCATION OF SOFFIT VENT FOR WOOD SIDING APPLICATION SHOWN WHEN ENCLOSED
~~SOFFIT OPTION USED. STUCCO APPLICATION NOT SHOWN FOR CLARITY. SEE #9/A8.0 OR #9/A8.3~~
CHAPTER 7A REQ - USE 'VULCAN VENT'
#VFS414FC, SFM LISTING #: 8165-2192.0502. SIM #9/A8.0

## SECTION 2.2 OF DSA IR 25-2

A. SHALL COMPLY WITH ASTM C636 AND SECTION 5.2 OF ASTM E580

B. #12 GAUGE HANGER WIRES MAY BE USED FOR UP TO AND INCLUDING A 4 FOOT BY 4 FOOT GRID SPACING AND SHALL BE ATTACHED TO MAIN RUNNERS. SPLICES IN HANGER WIRES SHALL DEVELOP 50 PERCENT OF THE WIRE ALLOWABLE LOAD

C. PROVIDE #12 GAUGE HANGER WIRES AT THE ENDS OF ALL MAIN AND CROSS RUNNERS WITHIN 8" OF THE SUPPORT OR WITHIN ONE-FOURTH (1/4) OF THE LENGTH OF THE END TEE, WHICHEVER IS LEAST, FOR THE PERIMETER OF THE CEILING AREA. PERIMETER WIRES ARE NOT REQUIRED WHEN THE LENGTH OF THE END TEE IS EIGHT (8) INCHES OR LESS

D. CEILING GRID MEMBERS SHALL BE ATTACHED TO TWO (2) ADJACENT WALLS PER ASTM E580, SECTION 5.2.3. CEILING GRID MEMBERS SHALL BE AT LEAST 3/4 INCH CLEAR OF OTHER WALLS. IF WALLS RUN DIAGONALLY TO CEILING GRID SYSTEM RUNNERS, ONE END OF MAIN AND CROSS RUNNERS SHOULD BE FREE, AND A MINIMUM OF 3/4 INCH CLEAR OF WALL

E. THE WIDTH OF THE PERIMETER SUPPORTING CLOSURE ANGLE SHALL BE NOT LESS THAN TWO (2) INCHES. USE OF ANGLES WITH SMALLER WIDTHS IN CONJUNCTION WITH PROPRIETY PERIMETER CLIPS MAY BE ACCEPTABLE IN ACCORDANCE WITH SECTION 5 OF THIS IR

F. AT THE PERIMETER OF THE CEILING AREA, WHERE MAIN OR CROSS RUNNERS ARE NOT CONNECTED TO THE ADJACENT WALL, PROVIDE INTERCONNECTION BETWEEN THE RUNNERS AT THE FREE END TO PREVENT LATERAL SPREADING. A METAL STABILIZER OR A #16 GAUGE WIRE WITH A POSITIVE MECHANICAL CONNECTION TO THE RUNNER MAY BE USED AND PLACED WITHIN EIGHT (8) INCHES OF THE WALL. WHERE THE PERPENDICULAR DISTANCE FROM THE WALL TO THE FIRST PARALLEL RUNNER IS EIGHT (8) INCHES OR LESS, THE STABILIZER OR #16 GAUGE IS NOT REQUIRED

## GENERAL NOTES

1. INSTALL HORIZONTAL FIRE BLOCKING MATERIAL AT 10'-0" MAX OC PER SECTION 718.2.2 FIRE BLOCKING MATERIALS PER SECTION 718.2.1

PROJECT SPECIFIC (CHECK ONE):

☒ STANDARD DESIGN AS SHOWN

☐ SOLATUBE OPTION. REFERENCE SHEET A11.0

FOR NOTES SEE SHEET A2.0b

STATE AGENCY APPROVAL

IDENTIFICATION STAMP
DIV. OF THE STATE ARCHITECT
APP. 04-124098 INC:
REVIEWED FOR
SS ☑ FLS ☑ ACS ☑
DATE: 11/14/24


SKC COMPANY
15345 FAIRFIELD RANCH ROAD, SUITE #160, CHINO, CA 91709
OFFICE: (909) 740-3120, FAX: (909) 726-9470
WEBSITE: WWW.SKCCOMPANY.COM
MANUFACTURER #MF1279666 DEALER # DL1279666
GC LIC # 992118 SBE CERTIFIED



ALL DESIGNS INDICATED ON THESE PLANS/DRAWINGS ARE PROPERTY OF SKC, INC AND ARE FOR THE USE BY SKC IN THE SPECIFIED JOB ONLY. THEY SHALL NOT BE USED AND/OR DUPLICATED OR TRANSMITTED IN ANY FORM, FOR ANY PURPOSE WITHOUT THE PRIOR WRITTEN CONSENT OF SKC, INC. ANY UNAUTHORIZED USE OF THESE PLANS SHALL SUBJECT THE OWNER OF SAID PROPERTY TO LIQUIDATED DAMAGES OF $75,000.00. THESE PLANS ARE PROTECTED UNDER THE PROVISIONS OF THE 1976 COPYRIGHT ACT COPYRIGHT SKC, © ALL RIGHTS RESERVED.


DISTRICT/CUSTOMER NAME:
NEXTMOD

SCHOOL/SITE NAME:
STOCKPILE

SHEET TITLE:

REFLECTED CEILING PLAN
24'x40'

PRE-CHECK (PC) DOCUMENT
CODE: 2022 CBC
A SEPARATE PROJECT APPLICATION FOR CONSTRUCTION IS REQUIRED

APPROVED
DIV. OF THE STATE ARCHITECT
APP: 04-122454 PC
REVIEWED FOR
SS ☑ FLS ☑ ACS ☑ CG ☑
DATE: 11/14/2023

PROFESSIONAL OF RECORD ON PC


ORION
Structural Engineering, Inc.
11305 RANCHO BERNARDO RD
SUITE 121
SAN DIEGO CA 92127
PHONE (858) 679-1974


REGISTERED PROFESSIONAL ENGINEER
NAM Z. ORION
No. 5327
EXP. 12/31/24
STRUCTURAL
STATE OF CALIFORNIA


FIRM: Orion Structural Engineering, Inc.
ADDRESS: 11305 Rancho Bernardo Road Ste 121
CITY: San Diego, CA
PHONE: 858-679-1974


PROJECT SPECIFIC PROFESSIONAL OF RECORD

FIRM:
ADDRESS:
CITY:
PHONE:

REVISIONS

1 -
2 -
3 -
4 -
5 -

| | |
|---|---|
| PROJECT NO.: | 00-0000 |
| DRAFTER: | 00 |
| SCALE: | AS NOTED |
| DATE: | 00-00-00 |

SHEET NUMBER

**A2.1**

10/31/2023 11:48:23 AM

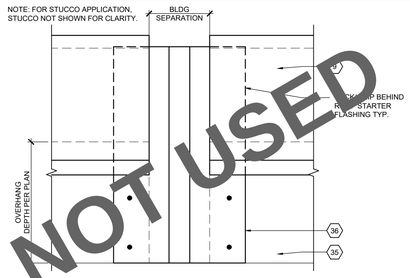


FRONT FASCIA AT NON GUTTER

SCALE: 6" = 1'-0"

15

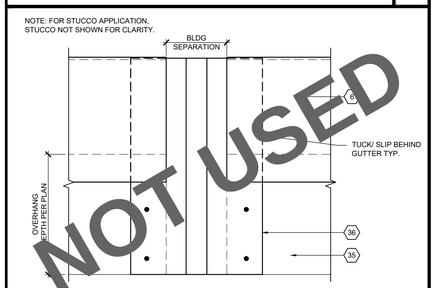


FRONT FASCIA AT GUTTER

SCALE: 6" = 1'-0"

16

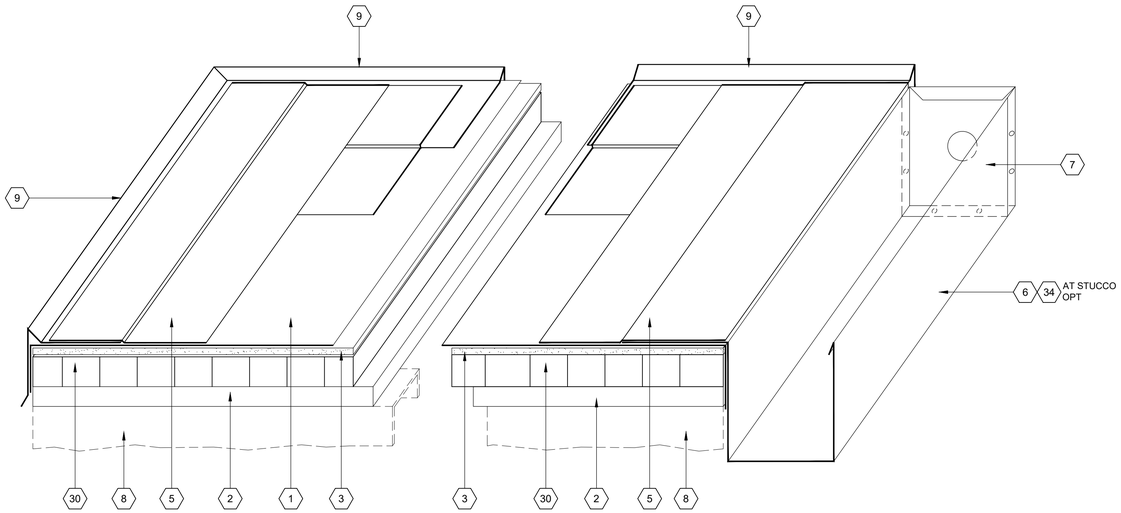


TPO ROOF

1

## KEY NOTES

1. TPO MEMBRANE ROOFING SYSTEM FULLY ADHERED TO DENS-DECK
2. PLYWOOD FOR ROOF DIAPHRAGM (SEE STRUCTURAL ROOF FRAMING PLANS)
3. 1/4" PRIMED DENS-DECK UNDERLAYMENT FIRESTONE ALL PURPOSE FASTENERS, 1-1/4" MIN WITH ULTRAPLY TPO, 3" INSULATION PLATE (W56RAC4190)
4. 26 GA SEISMIC FLASHING PER #4/A8.2. ATTACH WITH MIN #8 X 1-1/2" EXT WS AT 24" OC
5. 6" TPO SEAM TAPE HEAT WELDED OVER FLASHING EDGE AND TPO MEMBRANE
6. 26 GA GUTTER PER #13/A8.2. ATTACH WITH MIN #8 X 1-1/2" EXT WS @ 24" OC
7. 26 GA END FLASHING PER #9/A8.2 ATTACH WITH MIN #8 SDS @ 24" OC
8. ROOF BEAM/TRUSS (SEE STRUCTURAL ROOF FRAMING PLANS)
9. 26 GA STARTER FLASHING PER #10/A8.2. ATTACH WITH MIN #8 X 1-1/2" SDS @ 24" OC
10. 12" TPO SEAM TAPE HEAT WELDED TO TPO
11. TPO BONDING ADHESIVE
12. 1X STUCCO STOP ATTACHED WITH MIN #8 SDS AT 36" OC (PRE-DRILL AS NECESSARY)
13. 18 GA MIN X 3" MIN WIDE ANGLE (VERIFY WIDTH DIMENSION WITH HVAC UNIT). SEE DETAIL #C/M0.0 FOR LOCATION
14. ROOF UP TO CURB WITH MEMBRANE SAME AS ROOFING FINISH
15. ROOF MOUNT HVAC UNIT
16. PREFABRICATED METAL CURB
17. MIN R-8 RIGID INSULATION (1-1/2" MIN THICK) FILLER AROUND CURB SECURED WITH MIN #8 X 1-3/4" FH SDS WITH MIN 1-3/4" DIAMETER WASHER AT 12" OC STAGGERED (MIN 3 FASTENERS PER SIDE)
18. DOUBLE ROOF JOIST
19. (6) #12x2" HEX HEAD SDS AT EACH SIDE OF CURB THROUGH ROOF DECK
20. CANT STRIP
21. CURB CAP. SEE SHEET A11.0, DETAIL A.
22. 2X6 CURB. USE (4) #10 X 1 1/2" WOOD SCREWS EACH SIDE OF CURB THROUGH ROOF DECK.
23. SOLATUBE EXTENSION TUBE. SEE SHEET A11.0 DETAIL A
24. 2X RIM JOIST.
25. TAPERED 2X AT 16" O.C.
26. FILLER STRIP.
27. #8 WS @ 12" O.C.
28. 1/2" CDX PLYWOOD
29. FILL CONCEALED SPACE WITH INSULATION PER NFPA 13.8.15.1.2.7
30. H-SHIELD 3" RIGID INSULATION BY HUNTER PANELS OR APPROVED EQUAL. FOR MECHANCALLY FASTEN, BUTT EDGES, STAGGER JOINTS OF ADJACENT PANELS AND SECURE WITH 4-1/2" HUNTER PANELS SIP WD SCREW. SEE DETAIL #6 FOR PATTERN. FOR FULLY ADHERED APPLICATION, EACH PANEL MUST BE SECURED TO ROOF DECK. MAXIMUM 4' X 4' PANELS OF H-SHIELD WITH A FULL MOPPING OF HOT STEEP ASPHALT, INSULATION ADHESIVE OR COLD APPLIED MASTIC. BUTT EDGES AND STAGGER JOINTS OF ADJACENT PANELS
31. DOUBLE 2X STACKED AROUND ROOF PERIMETER. SECURE BOTTOM 2X TO ROOF STRUCTURE WITH MIN #12 X 3" FH SDS AT 24" OC. ATTACHED TOP 2X WITH 10D BOX NAILS AT 16" OC
32. GASKET AROUND ROOF CURB. SEE #E/M0.1 FOR REFERENCE
33. 26 GA STARTER FLASHING PER #15/A8.2. ATTACH WITH MIN #8 X 1-1/2" SDS @ 24" OC
34. 26 GA GUTTER PER #12/A8.2. ATTACH WITH MIN #8 X 1-1/2" EXT WS @ 24" OC
35. BUILDING OVERHANG
36. OVERHANG SEISMIC FLASHING. FLASHING PER #3/A8.2. ATTACH WITH MIN #10 X 1-1/2"FH SDS AT 12" O.C.

## GENERAL NOTES

1. SEE SHEET METAL AND FLASHING DETAILS SHEET A8.2 FOR MORE INFORMATION

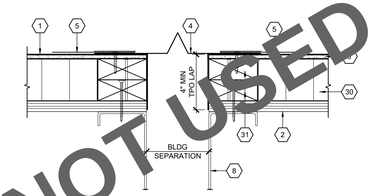


ROOF SEPARATION

SCALE: 3" = 1'-0"

5

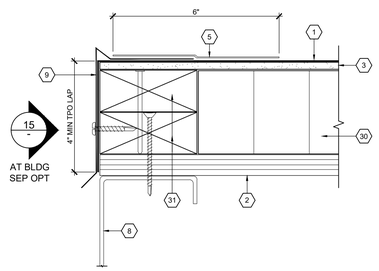


ROOF FLASHING

SCALE: 6" = 1'-0"

4

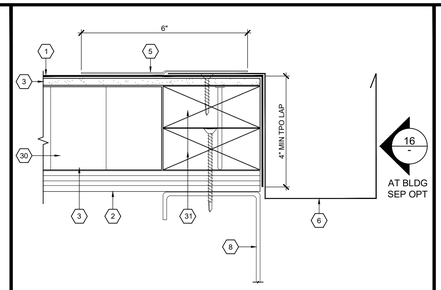


ROOF GUTTER

SCALE: 6" = 1'-0"

3

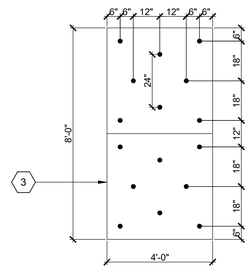


DENS-DECK UNDERLAY ATTACHMENT

SCALE: NTS

2

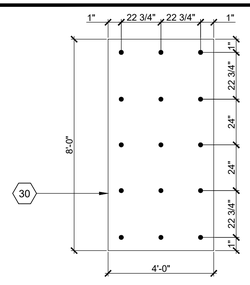


RIGID INSULATION NAILING PATTERN

SCALE: NTS

9

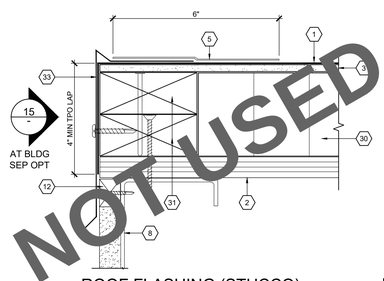


ROOF FLASHING (STUCCO)

SCALE: 6" = 1'-0"

8

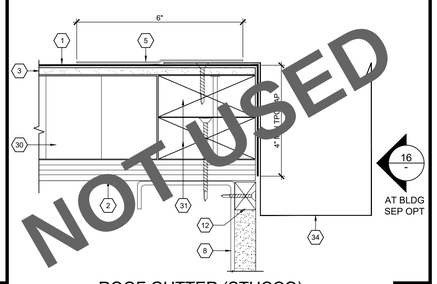


ROOF GUTTER (STUCCO)

SCALE: 6" = 1'-0"

7

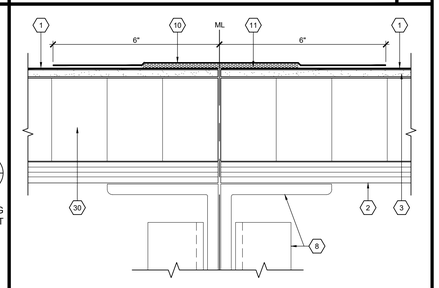


ROOF MODLINE

SCALE: 6" = 1'-0"

6

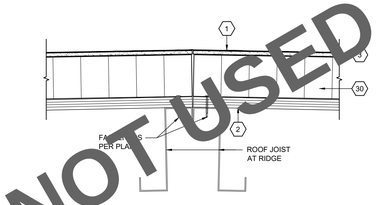


ROOF RIDGE

SCALE: 3" = 1'-0"

13

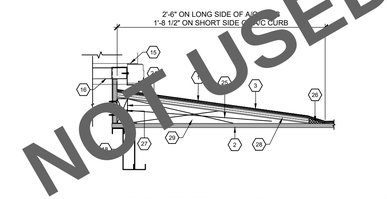


CRICKET FRAMING

SCALE: 1-1/2" = 1'-0"

12

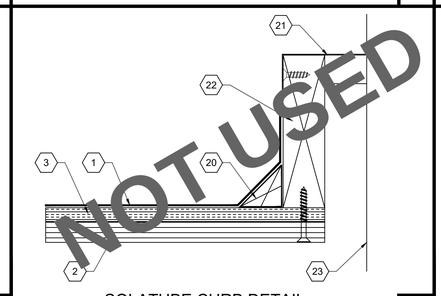


SOLATUBE CURB DETAIL

SCALE: 6" = 1'-0"

11

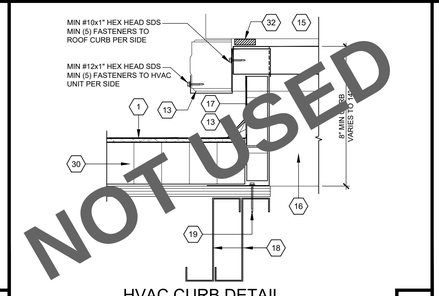


HVAC CURB DETAIL

SCALE: 3" = 1'-0"

10

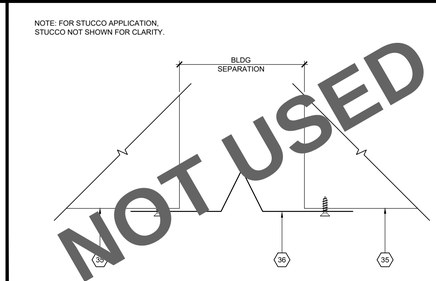


SEPERATION AT BOTTOM OVERHANG

SCALE: 6" = 1'-0"

14

STATE AGENCY APPROVAL

IDENTIFICATION STAMP
DIV. OF THE STATE ARCHITECT
APP. 04-124098 INC:
REVIEWED FOR
SS ☑ FLS ☑ ACS ☑
DATE: 11/14/24

KSC COMPANY

15345 FAIRFIELD RANCH ROAD, SUITE #160, CHINO, CA 91709
OFFICE: (909) 740-3120, FAX: (909) 726-9470
WEBSITE: WWW.SKCCOMPANY.COM
MANUFACTURER #MF1279666 DEALER # DL1279666
GC LIC # 992118 SBE CERTIFIED

ALL DESIGNS INDICATED ON THESE PLANS/DRAWINGS ARE PROPERTY OF SKC, INC AND ARE FOR THE USE BY SKC IN THE SPECIFIED JOB ONLY. THEY SHALL NOT BE USED AND/OR DUPLICATED OR TRANSMITTED IN ANY FORM, FOR ANY PURPOSE WITHOUT THE PRIOR WRITTEN CONSENT OF SKC, INC. ANY UNAUTHORIZED USE OF THESE PLANS SHALL SUBJECT THE OWNER OF SAID PROPERTY TO LIQUIDATED DAMAGES OF $75,000.00. THESE PLANS ARE PROTECTED UNDER THE PROVISIONS OF THE 1976 COPYRIGHT ACT COPYRIGHT SKC, © ALL RIGHTS RESERVED.

DISTRICT/CUSTOMER NAME:
NEXTMOD

SCHOOL/SITE NAME:
STOCKPILE

SHEET TITLE:

ROOF DETAILS
TPO

PRE-CHECK (PC) DOCUMENT
CODE: 2022 CBC
A SEPARATE PROJECT APPLICATION FOR CONSTRUCTION IS REQUIRED

APPROVED
DIV. OF THE STATE ARCHITECT
APP: 04-122454 PC
REVIEWED FOR
SS ☑ FLS ☑ ACS ☑ CG ☑
DATE: 11/14/2023

PROFESSIONAL OF RECORD ON PC

ORION
Structural Engineering, Inc.
11305 RANCHO BERNARDO RD
SUITE 121
SAN DIEGO CA 92127
PHONE (858) 679-1974

REGISTERED PROFESSIONAL ENGINEER
RYAN J. OLSEN
No. 3437
EXP. 12/31/24
STRUCTURAL
STATE OF CALIFORNIA

FIRM: Orion Structural Engineering, Inc.
ADDRESS: 11305 Rancho Bernardo Road Ste 121
CITY: San Diego, CA
PHONE: 858-679-1974

PROJECT SPECIFIC PROFESSIONAL OF RECORD

FIRM:
ADDRESS:
CITY:
PHONE:

REVISIONS

1 -
2 -
3 -
4 -
5 -

| | |
|---|---|
| PROJECT NO.: | 00-0000 |
| DRAFTER: | 00 |
| SCALE: | AS NOTED |
| DATE: | 00-00-00 |

SHEET NUMBER

A3.5

10/31/2023 11:49:17 AM

REAR

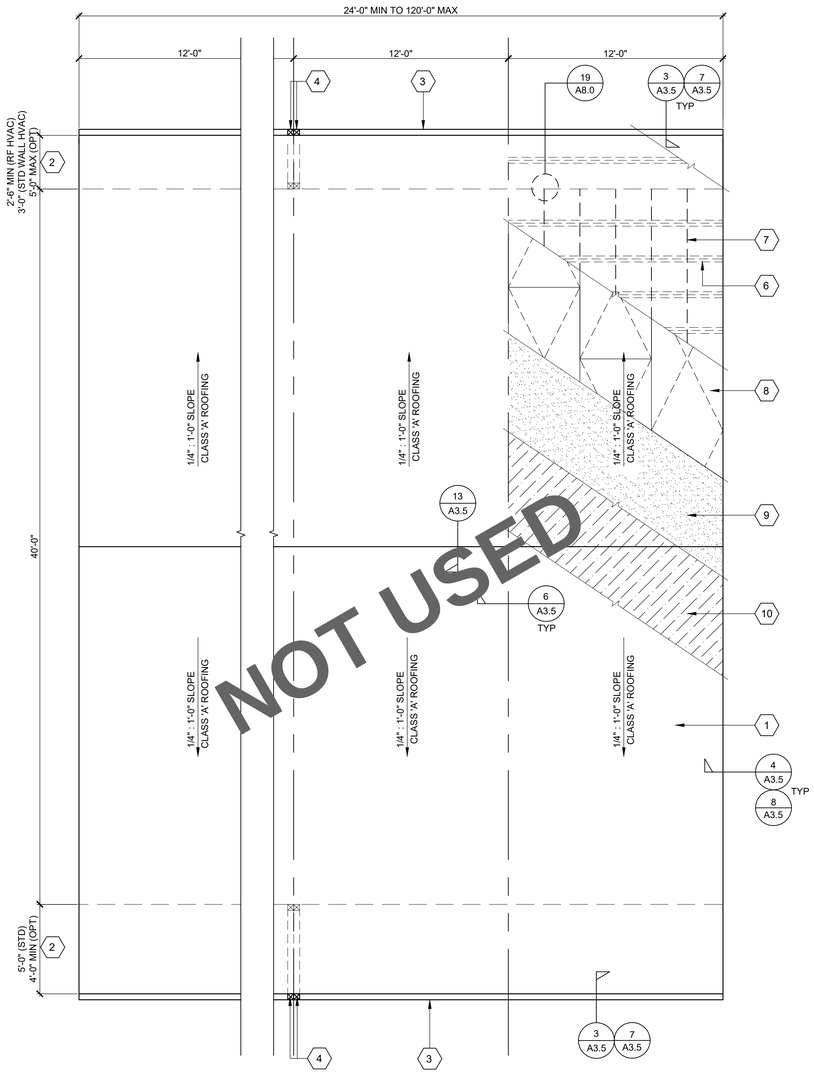


FRONT

## ROOF PLAN (TPO)-DUAL SLOPE

SCALE: 1/4" = 1'-0"

REAR

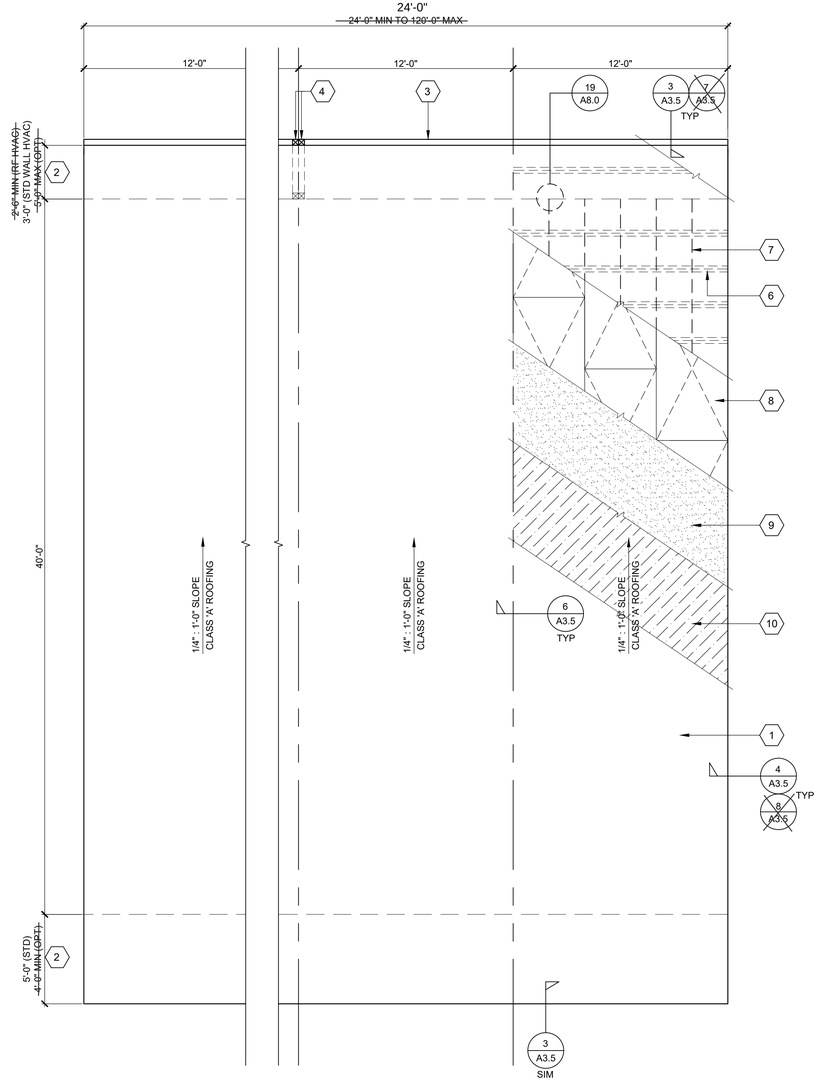


FRONT

## ROOF PLAN (TPO)-MONO SLOPE

SCALE: 1/4" = 1'-0"

## KEY NOTES

1. TPO MEMBRANE ROOFING SYSTEM OVER 3" RIGID INSULATION SEE DETAIL #1 SHEET A3.5 FOR INSTALLATION
2. OVERHANG MEMBER (SEE STRUCTURAL ROOF FRAMING PLAN FOR PRECISE LENGTH). PRIMARY BLDG ENTRANCES SHALL REQUIRE A 48" MIN DOOR PROTECTION. SEE FLOOR PLAN
3. GUTTER (SEE ROOF DETAILS SHEET FOR MORE INFORMATION)
4. DOWNSPOUT SEE DETAIL #17/A8.0 FOR MORE INFORMATION SEE EXTERIOR SHEET FOR EXACT LOCATION. FOR BUILDINGS GREATER THAN 60'-0", SEE SHEET A0.5
5. ~~RIDGE LINE~~
6. JOIST (SEE STRUCTURAL ROOF FRAMING PLANS)
7. 16 GA WIRE ATTACHED TO ROOF JOISTS FOR INSULATION SUPPORT AT 24" OC MAX
8. PLYWOOD FOR ROOF DIAPHRAGM (SEE STRUCTURAL ROOF FRAMING PLANS)
9. DENS-DECK UNDERLAYMENT OVER PLYWOOD. SEE DETAIL #2 SHEET A3.5 FOR INSTALLATION
10. 3" RIGID INSULATION OVER DENSDECK. SEE DETAIL #9/A3.5 FOR INSTALLATION

## GENERAL NOTES

1. BUILDING HOUSING GROUP 'E' OCCUPANCIES SHALL HAVE ROOF COVERINGS AS SPECIFIED IN TABLE 1505.1 CBC, CLASS 'B' MIN, PER CBC 1505.1.2
2. SEE MECHANICAL PLAN FOR ROOF TOP AC UNIT LOCATIONS. REFER TO #15/A8.0 FOR MOUNTING DETAIL
3. SEE SHEET METAL AND FLASHING DETAILS SHEET A8.2 FOR MORE INFORMATION
4. PROVIDE DRAFTSTOPS AT ATTIC SPACES EXCEEDING 3,000 SF PER SECTION 718.4.3 (APPLIES TO BUILDINGS EQUIPPED WITH AN OPEN-WEB TRUSS SYSTEM ONLY). SEE #16/A8.1

STATE AGENCY APPROVAL

IDENTIFICATION STAMP
DIV. OF THE STATE ARCHITECT
APP. 04-124098 INC:
REVIEWED FOR
SS ☑ FLS ☑ ACS ☑
DATE: 11/14/24


SKC COMPANY
15345 FAIRFIELD RANCH ROAD, SUITE #160, CHINO, CA 91709
OFFICE: (909) 740-3120, FAX: (909) 726-9470
WEBSITE: WWW.SKCCOMPANY.COM
MANUFACTURER #MF1275666 DEALER # DL1279666
GC LIC # 992118 SBE CERTIFIED



ALL DESIGNS INDICATED ON THESE PLANS/DRAWINGS ARE PROPERTY OF SKC, INC AND ARE FOR THE USE BY SKC IN THE SPECIFIED JOB ONLY. THEY SHALL NOT BE USED AND/OR DUPLICATED OR TRANSMITTED IN ANY FORM, FOR ANY PURPOSE WITHOUT THE PRIOR WRITTEN CONSENT OF SKC, INC. ANY UNAUTHORIZED USE OF THESE PLANS SHALL SUBJECT THE OWNER OF SAID PROPERTY TO LIQUIDATED DAMAGES OF $75,000.00. THESE PLANS ARE PROTECTED UNDER THE PROVISIONS OF THE 1976 COPYRIGHT ACT COPYRIGHT SKC, © ALL RIGHTS RESERVED.


DISTRICT/CUSTOMER NAME:
NEXTMOD

SCHOOL/SITE NAME:
STOCKPILE

SHEET TITLE:

ROOF PLAN
MONO & DUAL SLOPE
TPO

PRE-CHECK (PC) DOCUMENT
CODE: 2022 CBC
A SEPARATE PROJECT APPLICATION FOR CONSTRUCTION IS REQUIRED

APPROVED
DIV. OF THE STATE ARCHITECT
APP: 04-122454 PC
REVIEWED FOR
SS ☑ FLS ☑ ACS ☑ CG ☑
DATE: 11/14/2023

PROFESSIONAL OF RECORD ON PC


ORION
Structural Engineering, Inc.
11305 RANCHO BERNARDO RD
SUITE 121
SAN DIEGO CA 92127
PHONE: (858) 679-1974


REGISTERED PROFESSIONAL ENGINEER
RYAN J. OLSEN
No. 34537
EXP. 12/31/24
STRUCTURAL
STATE OF CALIFORNIA

FIRM: Orion Structural Engineering, Inc.
ADDRESS: 11305 Rancho Bernardo Road Ste 121
CITY: San Diego, CA
PHONE: 858-679-1974

PROJECT SPECIFIC PROFESSIONAL OF RECORD

FIRM:
ADDRESS:
CITY:
PHONE:

REVISIONS

1 -
2 -
3 -
4 -
5 -

| | |
|---|---|
| PROJECT NO.: | 00-0000 |
| DRAFTER: | 00 |
| SCALE: | AS NOTED |
| DATE: | 00-00-00 |

SHEET NUMBER

A3.6

10/31/2023 11:49:29 AM

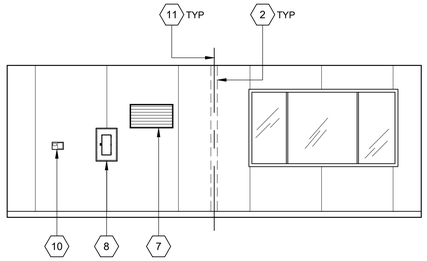


ELEVATION 1

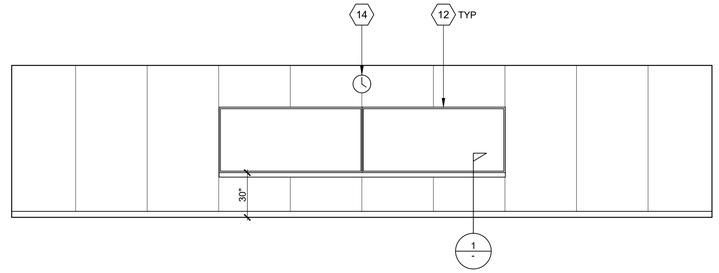


ELEVATION 2

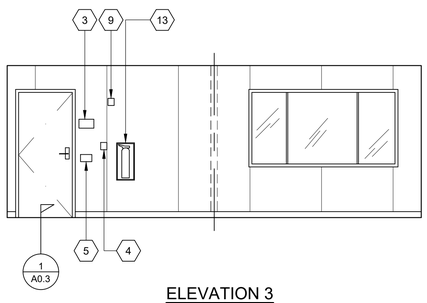


ELEVATION 3

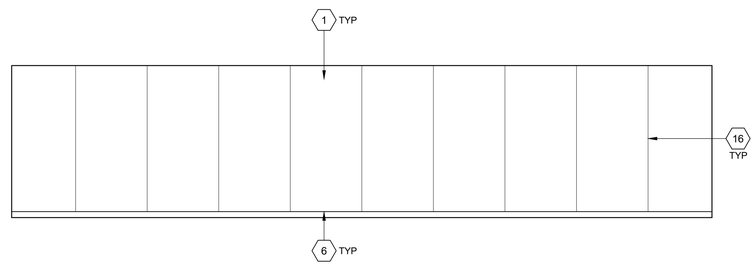


ELEVATION 4

## INTERIOR ELEVATIONS
## OPTION A (RIGHT HAND)

SCALE: 1/4" = 1'-0"

A

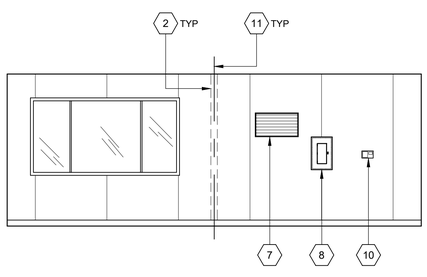


ELEVATION 1

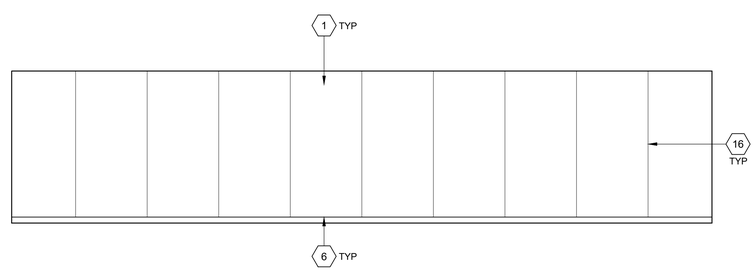


ELEVATION 2

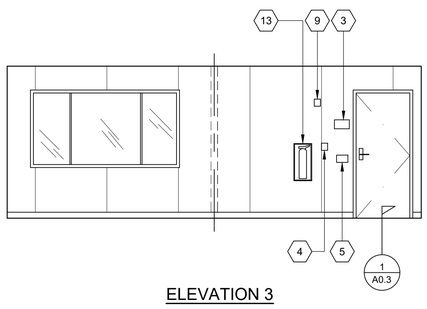


ELEVATION 3

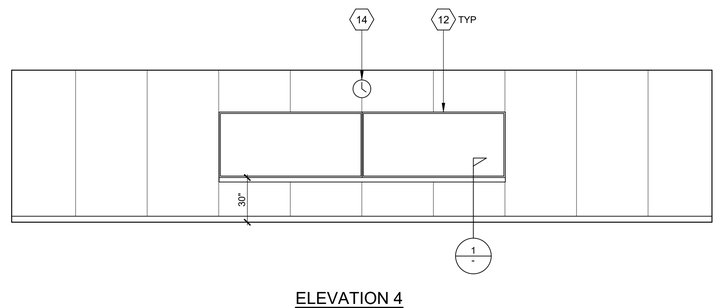


ELEVATION 4

## INTERIOR ELEVATIONS
## OPTION B (LEFT HAND)

SCALE: 1/4" = 1'-0"

B

## KEY NOTES

1. TYPICAL INTERIOR FINISH
2. FULL SHEET CLOSURE AT MODULAR JOINT STANDARD. (OPTIONAL 4" WALL BATT TRIM PIECE) - FIELD VERIFY
3. TACTILE EXIT SIGNAGE (SEE SIGNAGE SHEET)
4. FIRE ALARM PULL STATION (SEE ELECTRICAL PLAN)
5. OCCUPANCY SENSOR OR LIGHT SWITCH (SEE ELECTRICAL PLAN)
6. TOP SET BASE TYPICAL (SEE FINISH SCHEDULE)
7. RETURN AIR GRILL
8. ELECTRICAL PANEL +48" TO HANDLE
9. SPEAKER/STROBE (SEE ELECTRICAL PLAN)
10. THERMOSTAT (SEE MECHANICAL PLAN)
11. MODULAR JOINT
12. 8'-0" x 4'-0" MARKER BOARD, ERASER RAIL PROJECT 4" MAX
13. FIRE EXTINGUISHER IN SEMI-RECESSED CABINET #4/A8.1
14. 12" DIA ELECTRIC CLOCK (SEE ELECTRICAL PLAN)
15. WALL SYSTEM (SEE WALL FRAMING ELEVATION SHEET)
16. INTERIOR FINISH SEAM

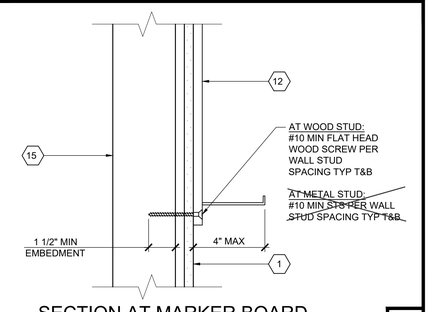


## SECTION AT MARKER BOARD

SCALE: 3" = 1'-0"

1

STATE AGENCY APPROVAL

IDENTIFICATION STAMP
DIV. OF THE STATE ARCHITECT
APP. 04-124098 INC:
REVIEWED FOR
SS ☑ FLS ☑ ACS ☑
DATE: 11/14/24


SKC COMPANY
15345 FAIRFIELD RANCH ROAD, SUITE #160, CHINO, CA 91709
OFFICE: (909) 740-3120, FAX: (909) 726-9470
WEBSITE: WWW.SKCCOMPANY.COM
MANUFACTURER #M# 1279666 DEALER # DL1279666
GC LIC # 992118 SBE CERTIFIED



ALL DESIGNS INDICATED ON THESE PLANS/DRAWINGS ARE PROPERTY OF SKC, INC AND ARE FOR THE USE BY SKC IN THE SPECIFIED JOB ONLY. THEY SHALL NOT BE USED AND/OR DUPLICATED OR TRANSMITTED IN ANY FORM, FOR ANY PURPOSE WITHOUT THE PRIOR WRITTEN CONSENT OF SKC, INC. ANY UNAUTHORIZED USE OF THESE PLANS SHALL SUBJECT THE OWNER OF SAID PROPERTY TO LIQUIDATED DAMAGES OF $75,000.00. THESE PLANS ARE PROTECTED UNDER THE PROVISIONS OF THE 1976 COPYRIGHT ACT COPYRIGHT SKC, © ALL RIGHTS RESERVED.


DISTRICT/CUSTOMER NAME:
NEXTMOD

SCHOOL/SITE NAME:
STOCKPILE

SHEET TITLE:

INTERIOR ELEVATIONS
24'X40'

PRE-CHECK (PC) DOCUMENT
CODE: 2022 CBC
A SEPARATE PROJECT APPLICATION FOR
CONSTRUCTION IS REQUIRED

APPROVED
DIV. OF THE STATE ARCHITECT
APP: 04-122454 PC
REVIEWED FOR
SS ☑ FLS ☑ ACS ☑ CG ☑
DATE: 11/14/2023

PROFESSIONAL OF RECORD ON PC


ORION
Structural Engineering, Inc.
11305 RANCHO BERNARDO RD
SUITE 121
SAN DIEGO CA, 92127
PHONE (858) 679-1974


REGISTERED PROFESSIONAL ENGINEER
RYAN J. OWEN
No. 81208
EXP. 12/31/24
STRUCTURAL
STATE OF CALIFORNIA

FIRM: Orion Structural Engineering, Inc.
ADDRESS: 11305 Rancho Bernardo Road Ste 121
CITY: San Diego, CA
PHONE: 858-679-1974

PROJECT SPECIFIC PROFESSIONAL OF RECORD

FIRM:
ADDRESS:
CITY:
PHONE:

REVISIONS

1 -
2 -
3 -
4 -
5 -

| | |
|---|---|
| PROJECT NO.: | 00-0000 |
| DRAFTER: | 00 |
| SCALE: | AS NOTED |
| DATE: | 00-00-00 |

SHEET NUMBER

# A4.1

10/31/2023 11:50:47 AM

## BUILDING IDENTIFICATION SIGN

1. PER CFC SECTION 505.1, A BUILDING IDENTIFICATION SIGN SHALL BE PLACED ON A NEW OR EXITING BUILDING. SIGN SHALL BE PLACED AND DESIGNED PER SECTION 505.1. SIGN SHALL BE PROVIDED BY OWNER OR DISTRICT
2. FOR MODULAR BUILDING IDENTIFICATION TAG, REFER TO SHEET A0.1 UNDER GENERAL DESIGN REQUIREMENTS & #2/A0.4

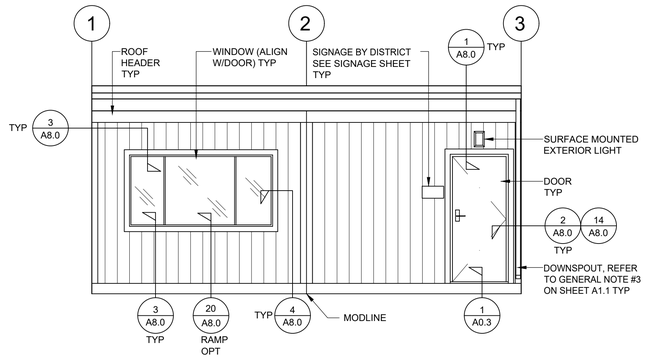


ELEVATION A

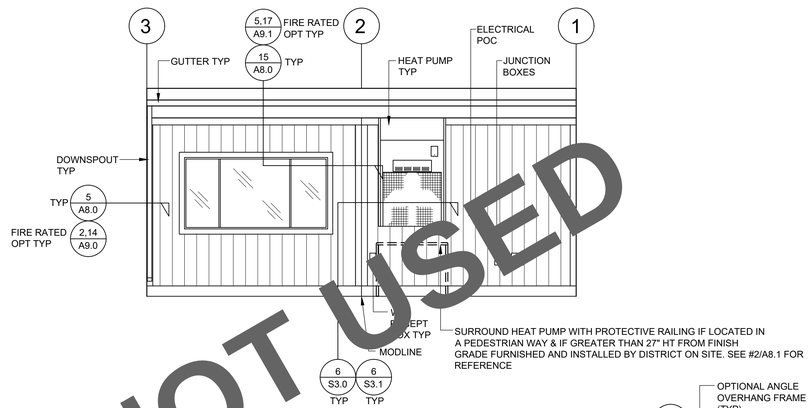


ELEVATION B

NOT USED

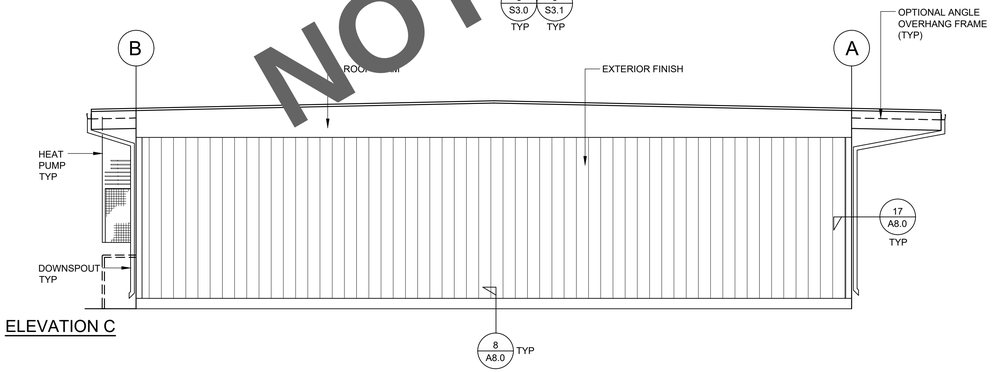


ELEVATION C

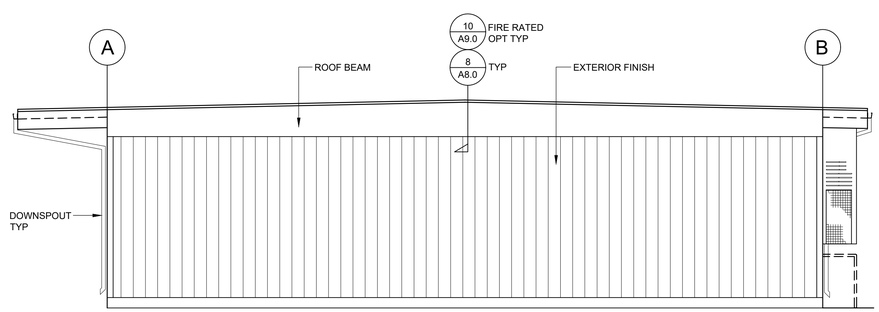


ELEVATION D

## EXTERIOR ELEVATIONS (DUAL SLOPE)

SCALE: 1/4" = 1'-0"

- RAMP AND LANDING NOT SHOWN FOR CLARITY
- SEE SHEET A8.0 FOR ARCHITECTURAL DETAILS

## BUILDING IDENTIFICATION SIGN

1. PER CFC SECTION 505.1, A BUILDING IDENTIFICATION SIGN SHALL BE PLACED ON A NEW OR EXITING BUILDING. SIGN SHALL BE PLACED AND DESIGNED PER SECTION 505.1. SIGN SHALL BE PROVIDED BY OWNER OR DISTRICT
2. FOR MODULAR BUILDING IDENTIFICATION TAG, REFER TO SHEET A0.1 UNDER GENERAL DESIGN REQUIREMENTS & #2/A0.4

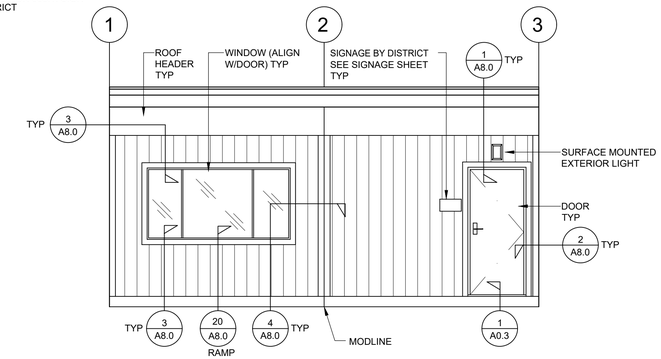


ELEVATION A

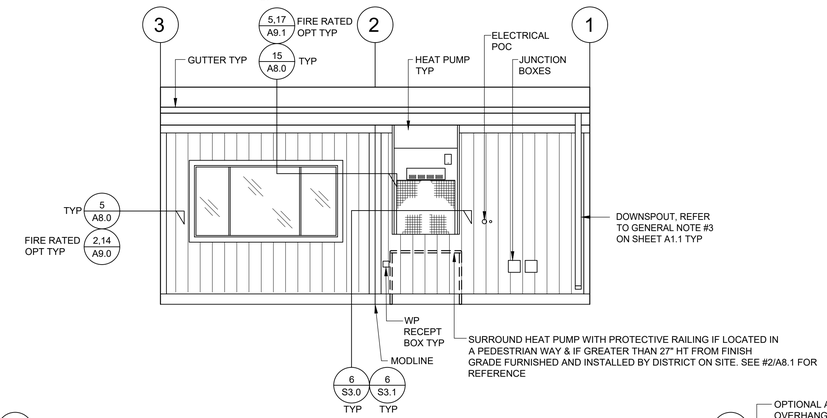


ELEVATION B

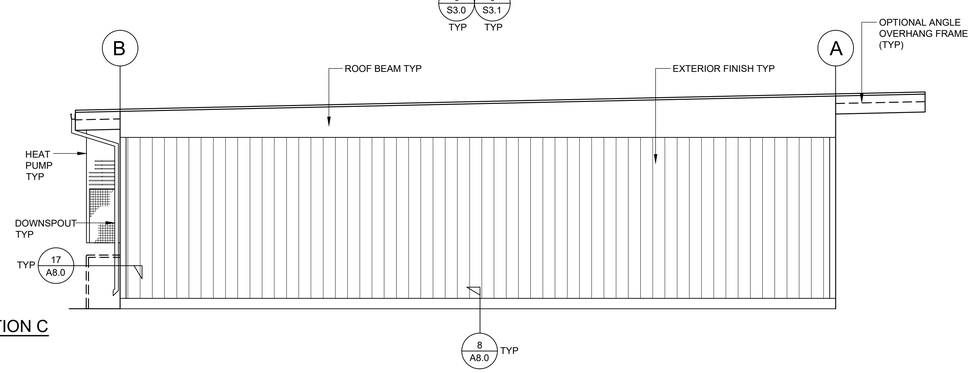


ELEVATION C

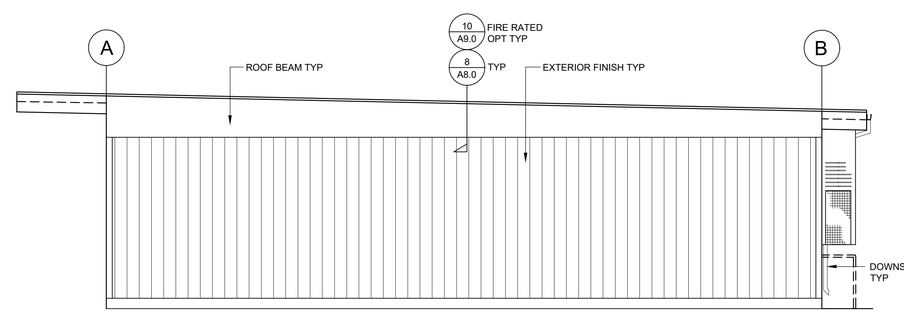


ELEVATION D

## EXTERIOR ELEVATIONS (MONO SLOPE)

SCALE: 1/4" = 1'-0"

- RAMP AND LANDING NOT SHOWN FOR CLARITY
- SEE SHEET A8.0 FOR ARCHITECTURAL DETAILS

STATE AGENCY APPROVAL

IDENTIFICATION STAMP
DIV. OF THE STATE ARCHITECT
APP. 04-124098 INC:
REVIEWED FOR
SS ☑ FLS ☑ ACS ☑
DATE: 11/14/24

SKC COMPANY
15345 FAIRFIELD RANCH ROAD, SUITE #160, CHINO, CA 91709
OFFICE: (909) 740-3120, FAX: (909) 726-9470
WEBSITE: WWW.SKCCOMPANY.COM
MANUFACTURER #MF127666 DEALER # DL127666
GC LIC # 992118 SBE CERTIFIED

ALL DESIGNS INDICATED ON THESE PLANS/DRAWINGS ARE PROPERTY OF SKC, INC AND ARE FOR THE USE BY SKC IN THE SPECIFIED JOB ONLY. THEY SHALL NOT BE USED AND/OR DUPLICATED OR TRANSMITTED IN ANY FORM, FOR ANY PURPOSE WITHOUT THE PRIOR WRITTEN CONSENT OF SKC, INC. ANY UNAUTHORIZED USE OF THESE PLANS SHALL SUBJECT THE OWNER OF SAID PROPERTY TO LIQUIDATED DAMAGES OF $75,000.00. THESE PLANS ARE PROTECTED UNDER THE PROVISIONS OF THE 1976 COPYRIGHT ACT COPYRIGHT SKC, © ALL RIGHTS RESERVED.

DISTRICT/CUSTOMER NAME:
NEXTMOD

SCHOOL/SITE NAME:
STOCKPILE

SHEET TITLE:
EXTERIOR ELEVATIONS
WOOD SIDING
24'x40'
OPTION "A" (RIGHT HAND)

PRE-CHECK (PC) DOCUMENT
CODE: 2022 CBC
A SEPARATE PROJECT APPLICATION FOR CONSTRUCTION IS REQUIRED

APPROVED
DIV. OF THE STATE ARCHITECT
APP: 04-122454 PC
REVIEWED FOR
SS ☑ FLS ☑ ACS ☑ CG ☑
DATE: 11/14/2023

PROFESSIONAL OF RECORD ON PC

ORION
Structural Engineering, Inc.
11305 RANCHO BERNARDO RD
SUITE 121
SAN DIEGO CA, 92127
PHONE (858) 679-1974
REGISTERED PROFESSIONAL ENGINEER
RYAN J. OWEN
C-62021
EXP. 12/31/24
STRUCTURAL
STATE OF CALIFORNIA

FIRM: Orion Structural Engineering, Inc.
ADDRESS: 11305 Rancho Bernardo Road Ste 121
CITY: San Diego, CA
PHONE: 858-679-1974

PROJECT SPECIFIC PROFESSIONAL OF RECORD

FIRM:
ADDRESS:
CITY:
PHONE:

REVISIONS

1 -
2 -
3 -
4 -
5 -

| | |
|---|---|
| PROJECT NO.: | 00-0000 |
| DRAFTER: | 00 |
| SCALE: | AS NOTED |
| DATE: | 00-00-00 |

SHEET NUMBER

# A5.1-A

10/31/2023 11:51:53 AM

## BUILDING IDENTIFICATION SIGN

1. PER CFC SECTION 505.1, A BUILDING IDENTIFICATION SIGN SHALL BE PLACED ON A NEW OR EXITING BUILDING. SIGN SHALL BE PLACED AND DESIGNED PER SECTION 505.1. SIGN SHALL BE PROVIDED BY OWNER OR DISTRICT
2. FOR MODULAR BUILDING IDENTIFICATION TAG, REFER TO SHEET A0.1 UNDER GENERAL DESIGN REQUIREMENTS & #2/A0.4

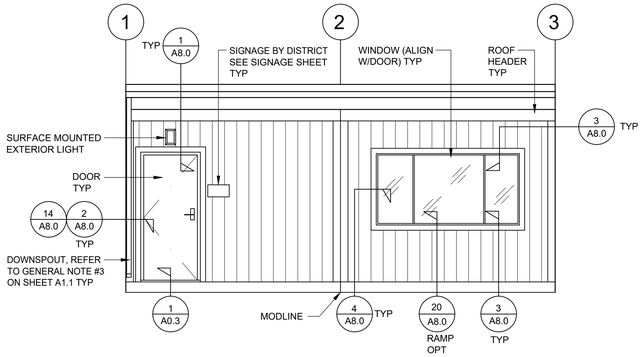


ELEVATION A

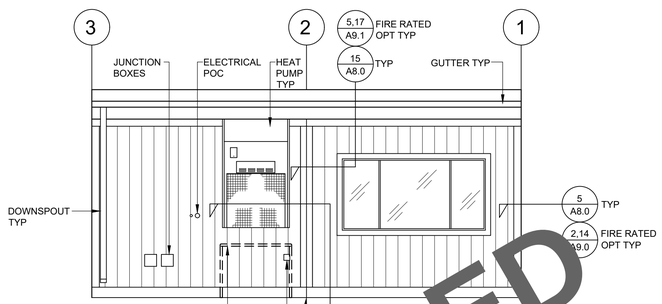


ELEVATION B

SURROUND HEAT PUMP WITH PROTECTIVE RAILING IF LOCATED IN A PEDESTRIAN WAY & IF GREATER THAN 27" HT FROM FINISH GRADE FURNISHED AND INSTALLED BY DISTRICT ON SITE. SEE #2/A8.1 FOR REFERENCE

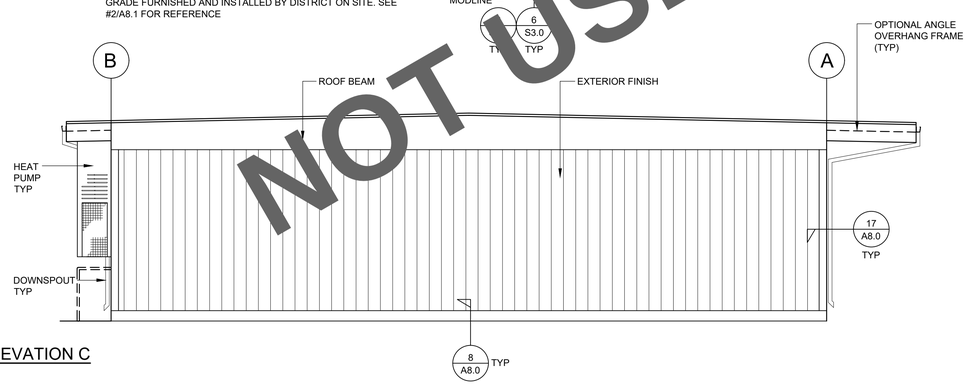


ELEVATION C

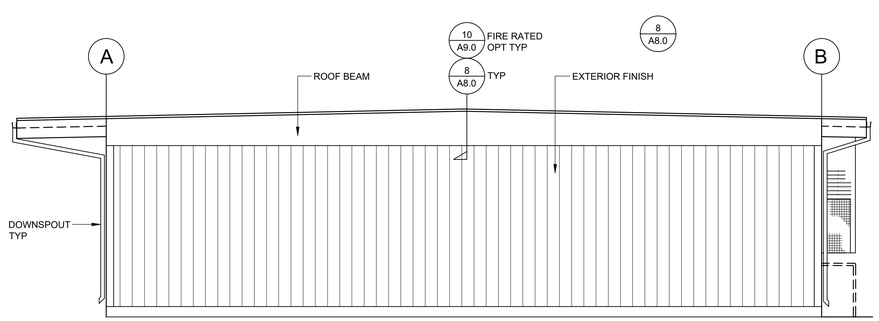


ELEVATION D

## EXTERIOR ELEVATIONS (DUAL SLOPE)

SCALE: 1/4" = 1'-0"

- RAMP AND LANDING NOT SHOWN FOR CLARITY
- SEE SHEET A8.0 FOR ARCHITECTURAL DETAILS

NOT USED


## BUILDING IDENTIFICATION SIGN

1. PER CFC SECTION 505.1, A BUILDING IDENTIFICATION SIGN SHALL BE PLACED ON A NEW OR EXITING BUILDING. SIGN SHALL BE PLACED AND DESIGNED PER SECTION 505.1. SIGN SHALL BE PROVIDED BY OWNER OR DISTRICT
2. FOR MODULAR BUILDING IDENTIFICATION TAG, REFER TO SHEET A0.1 UNDER GENERAL DESIGN REQUIREMENTS & #2/A0.4


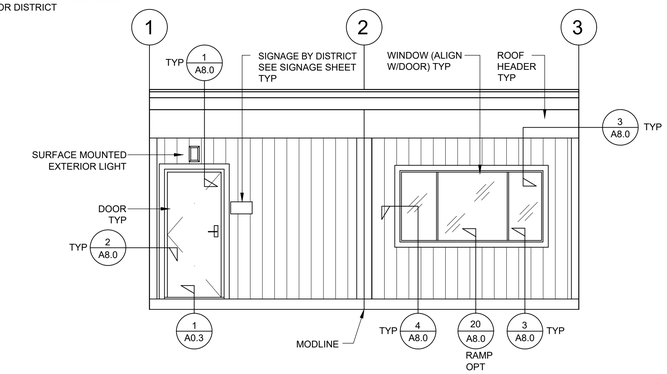


ELEVATION A

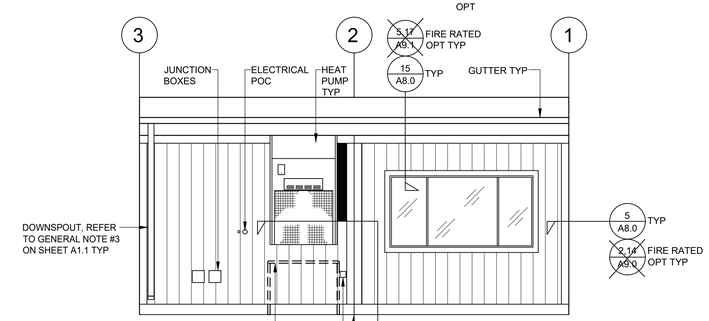


ELEVATION B


SURROUND HEAT PUMP WITH PROTECTIVE RAILING IF LOCATED IN A PEDESTRIAN WAY & IF GREATER THAN 27" HT FROM FINISH GRADE FURNISHED AND INSTALLED BY DISTRICT ON SITE. SEE #2/A8.1 FOR REFERENCE


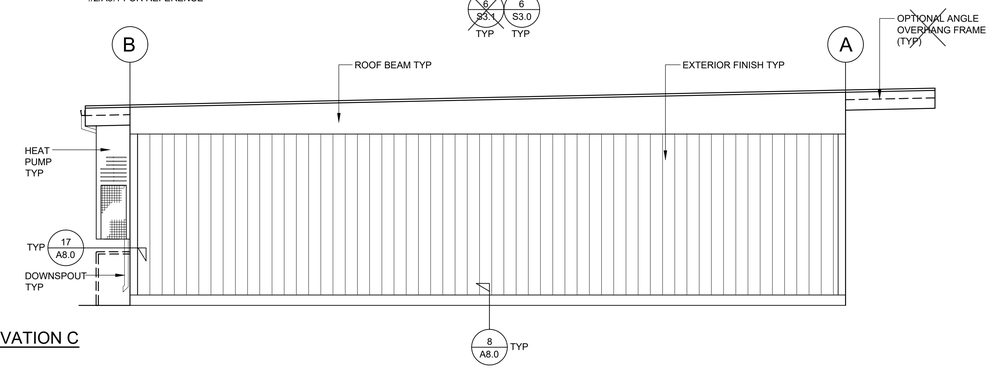


ELEVATION C

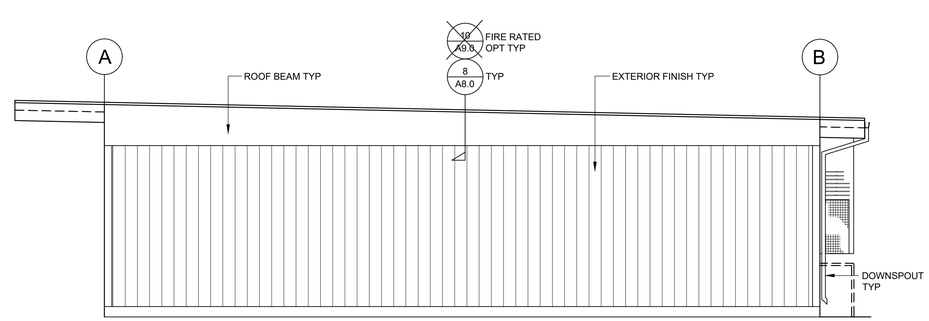


ELEVATION D

## EXTERIOR ELEVATIONS (MONO SLOPE)

SCALE: 1/4" = 1'-0"

- RAMP AND LANDING NOT SHOWN FOR CLARITY
- SEE SHEET A8.0 FOR ARCHITECTURAL DETAILS

STATE AGENCY APPROVAL

IDENTIFICATION STAMP
DIV. OF THE STATE ARCHITECT
APP. 04-124098 INC:
REVIEWED FOR
SS ☑ FLS ☑ ACS ☑
DATE: 11/14/24


SKC COMPANY
15345 FAIRFIELD RANCH ROAD, SUITE #160, CHINO, CA 91709
OFFICE: (909) 740-3120, FAX: (909) 726-9470
WEBSITE: WWW.SKCCOMPANY.COM
MANUFACTURER #MF1279666 DEALER # DL1279666
GC LIC # 992118 SBE CERTIFIED



ALL DESIGNS INDICATED ON THESE PLANS/DRAWINGS ARE PROPERTY OF SKC, INC AND ARE FOR THE USE BY SKC IN THE SPECIFIED JOB ONLY. THEY SHALL NOT BE USED AND/OR DUPLICATED OR TRANSMITTED IN ANY FORM, FOR ANY PURPOSE WITHOUT THE PRIOR WRITTEN CONSENT OF SKC, INC. ANY UNAUTHORIZED USE OF THESE PLANS SHALL SUBJECT THE OWNER OF SAID PROPERTY TO LIQUIDATED DAMAGES OF $75,000.00. THESE PLANS ARE PROTECTED UNDER THE PROVISIONS OF THE 1976 COPYRIGHT ACT COPYRIGHT SKC, © ALL RIGHTS RESERVED.


DISTRICT/CUSTOMER NAME:
NEXTMOD

SCHOOL/SITE NAME:
STOCKPILE

SHEET TITLE:
EXTERIOR ELEVATIONS
WOOD SIDING
24'x40'
OPTION "B" (LEFT HAND)

PRE-CHECK (PC) DOCUMENT
CODE: 2022 CBC
A SEPARATE PROJECT APPLICATION FOR CONSTRUCTION IS REQUIRED

APPROVED
DIV. OF THE STATE ARCHITECT
APP: 04-122454 PC
REVIEWED FOR
SS ☑ FLS ☑ ACS ☑ CG ☑
DATE: 11/14/2023

PROFESSIONAL OF RECORD ON PC


ORION
Structural Engineering, Inc.
11305 RANCHO BERNARDO RD
SUITE 121
SAN DIEGO CA, 92127
PHONE (858) 679-1974
RYAN J. OWEN
S 5183
EXP. 12/31/24
STRUCTURAL
STATE OF CALIFORNIA

FIRM: Orion Structural Engineering, Inc.
ADDRESS: 11305 Rancho Bernardo Road Ste 121
CITY: San Diego, CA
PHONE: 858-679-1974


PROJECT SPECIFIC PROFESSIONAL OF RECORD

FIRM:
ADDRESS:
CITY:
PHONE:

REVISIONS

1 -
2 -
3 -
4 -
5 -

| | |
|---|---|
| PROJECT NO.: | 00-0000 |
| DRAFTER: | 00 |
| SCALE: | AS NOTED |
| DATE: | 00-00-00 |

SHEET NUMBER

A5.1-B

10/31/2023 11:52:07 AM

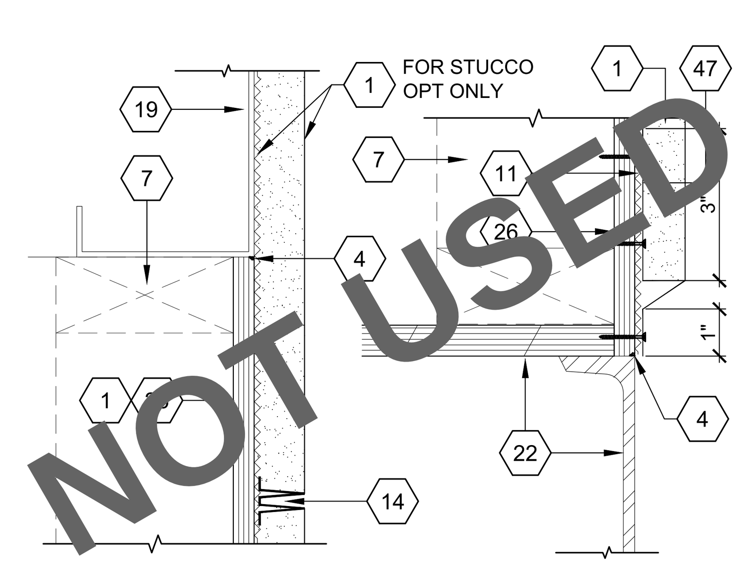


SEAMS AT EXTERIOR FINISH (STUCCO SIDING)
SCALE: 3" = 1'-0"
16

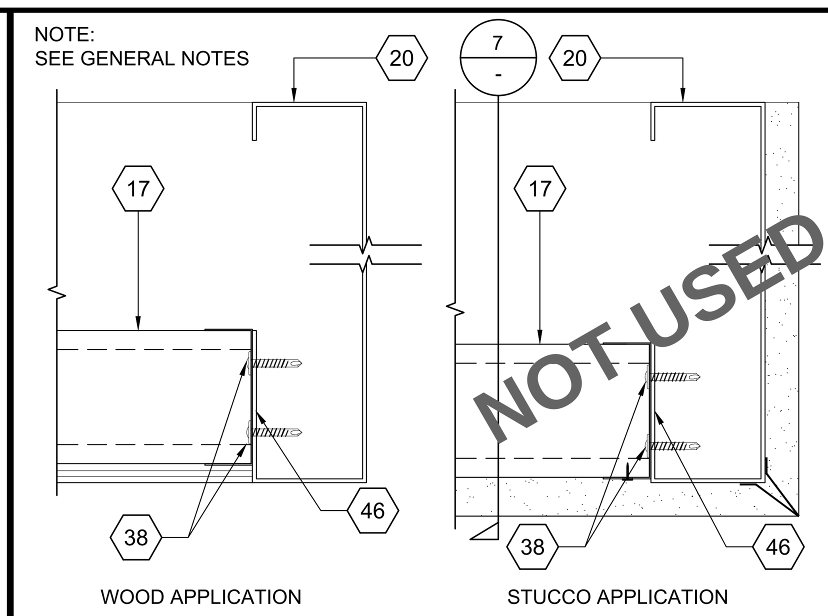


OVERHANG SOFFIT (CHANNEL)
SCALE: 3" = 1'-0"
11

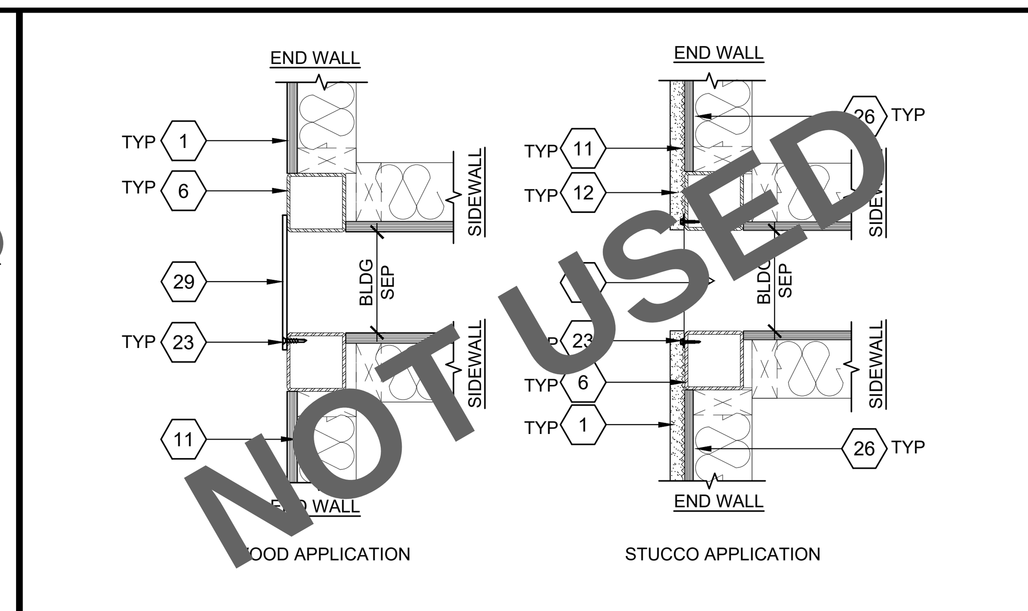


BUILDING WALL SEPARATION CLOSE-UP
SCALE: 1-1/2" = 1'-0"
6

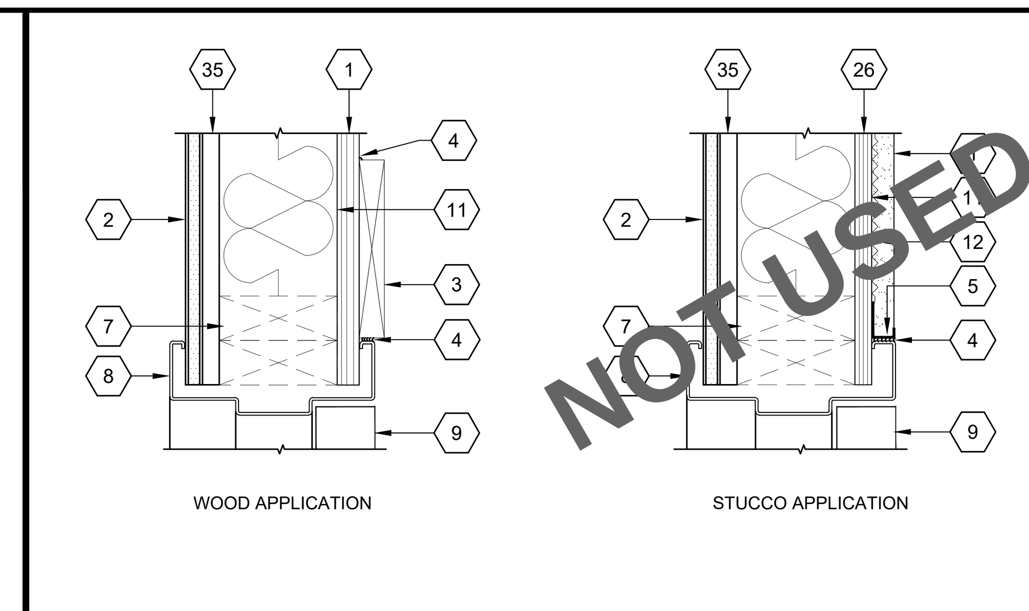


DOOR/WINDOW HEADER (HOLLOW METAL FRAME)
SCALE: 3" = 1'-0"
1

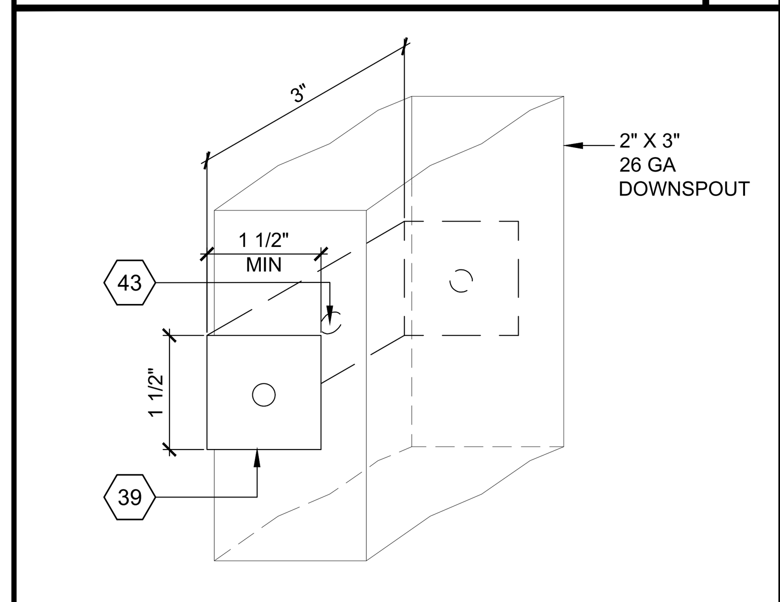


DOWNSPOUT
SCALE: NTS
17

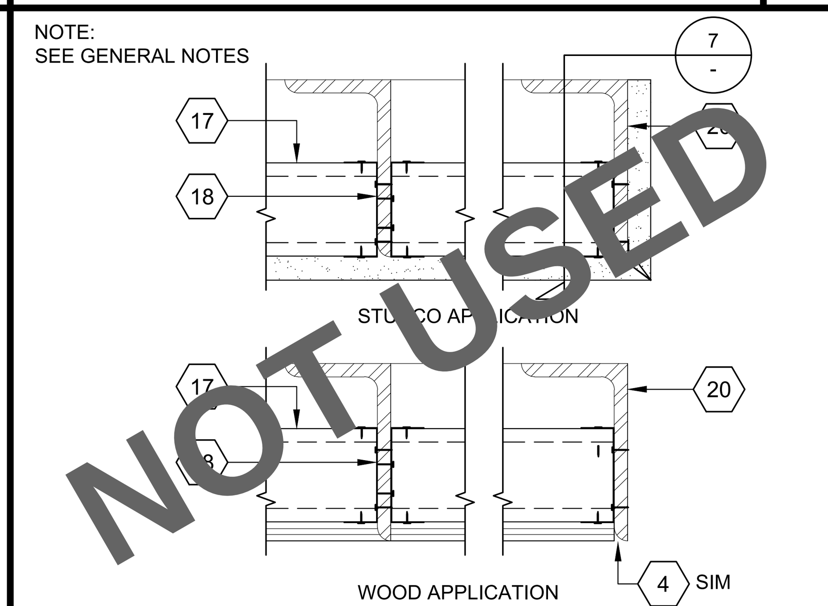


OVERHANG SOFFIT (ANGLE)
SCALE: NTS
12

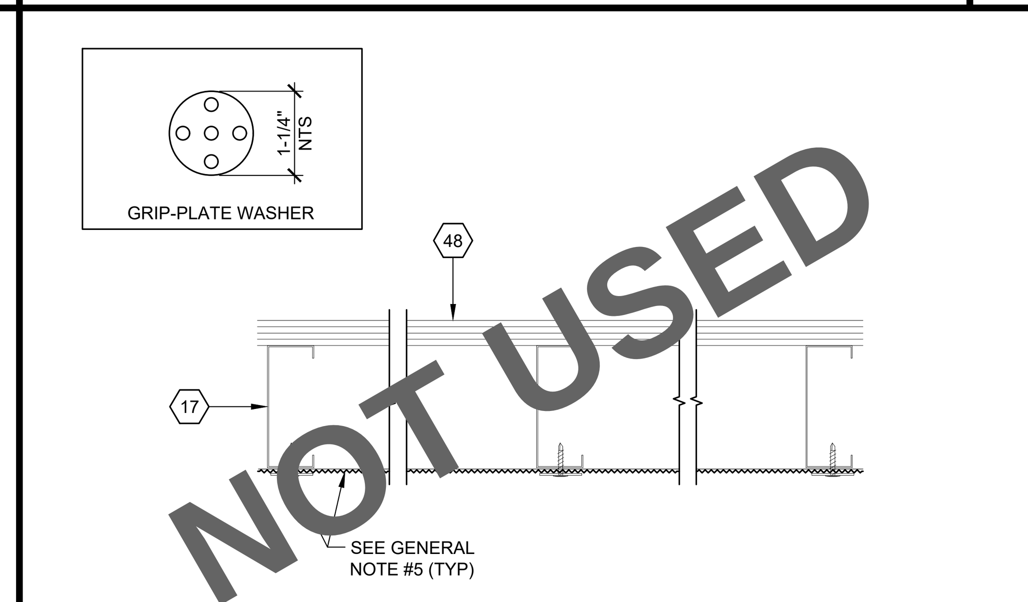


METAL LATH ATTACHMENT TO METAL STUDS (SOFFIT)
SCALE: 3" = 1'-0"
7

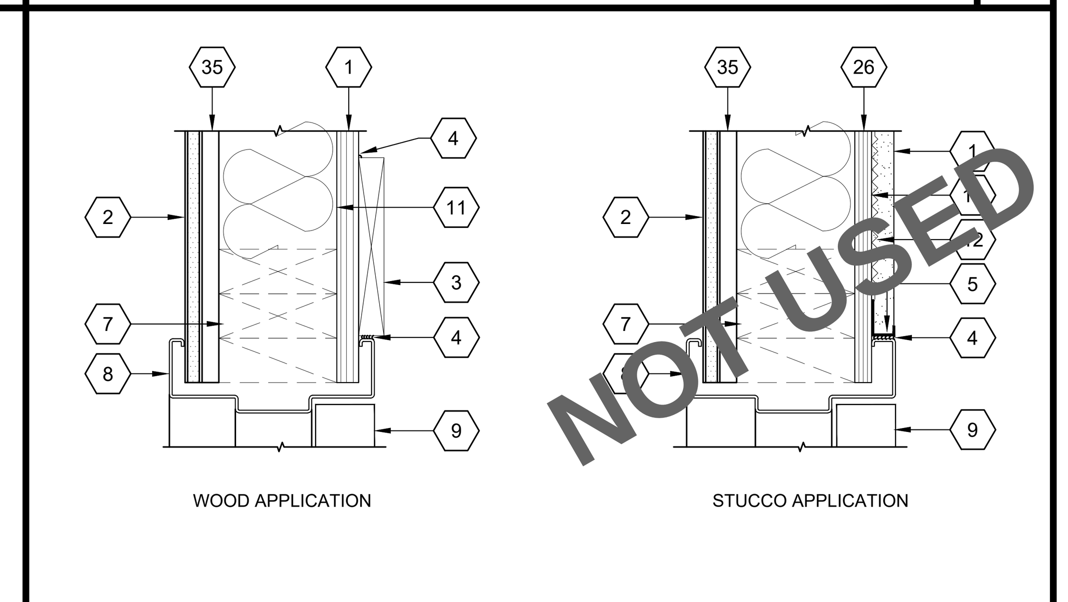


DOOR/WINDOW JAMB (HOLLOW METAL FRAME)
SCALE: 3" = 1'-0"
2

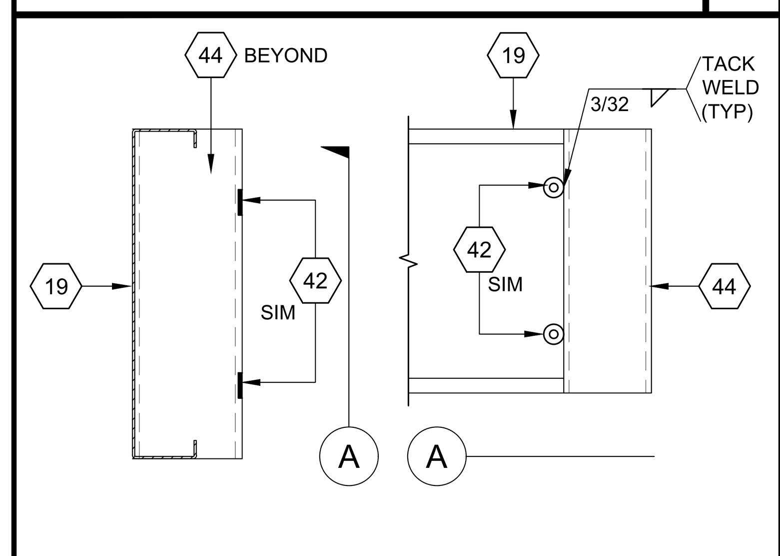


WASHERS AT ROOF
FOR INSULATION STRAP
SCALE: NTS
18

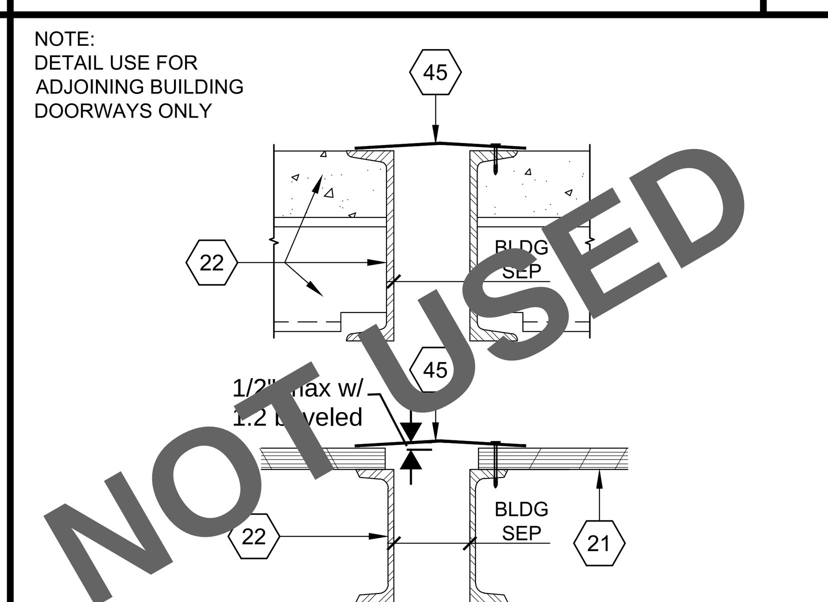


SEPARATION AT FLOOR
SCALE: NTS
13

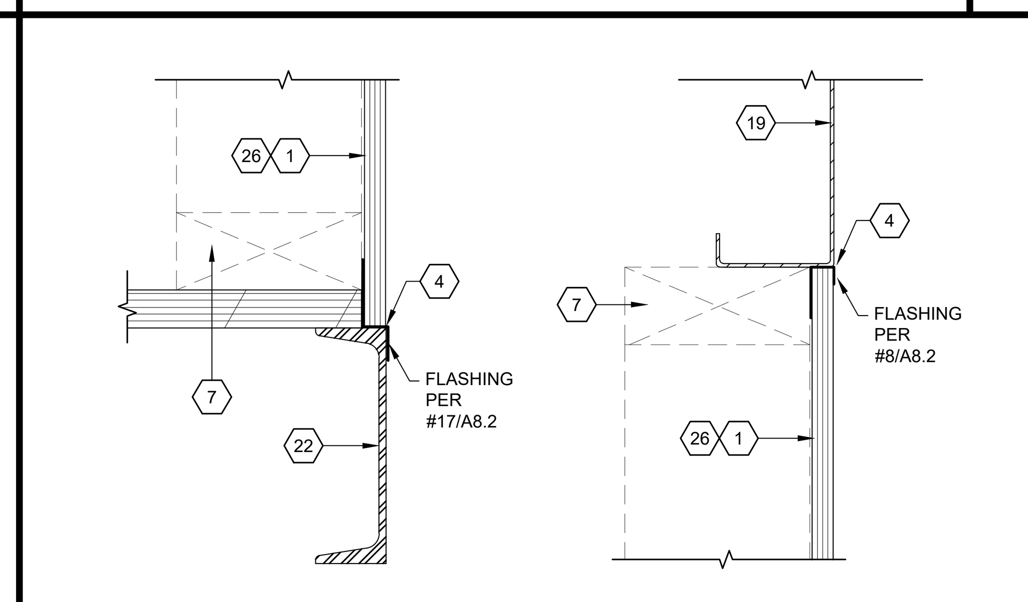


SEAMS AT EXTERIOR FINISH (WOOD SIDING)
SCALE: 3" = 1'-0"
8

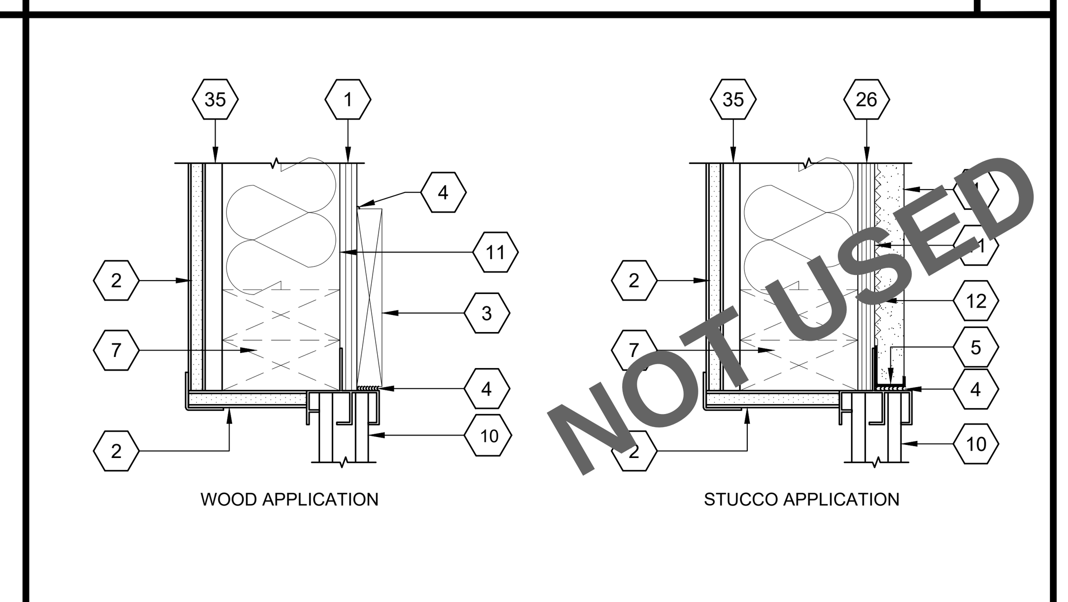


WINDOW HEADER/SILL (ALUMINUM FRAME)
SCALE: 3" = 1'-0"
3

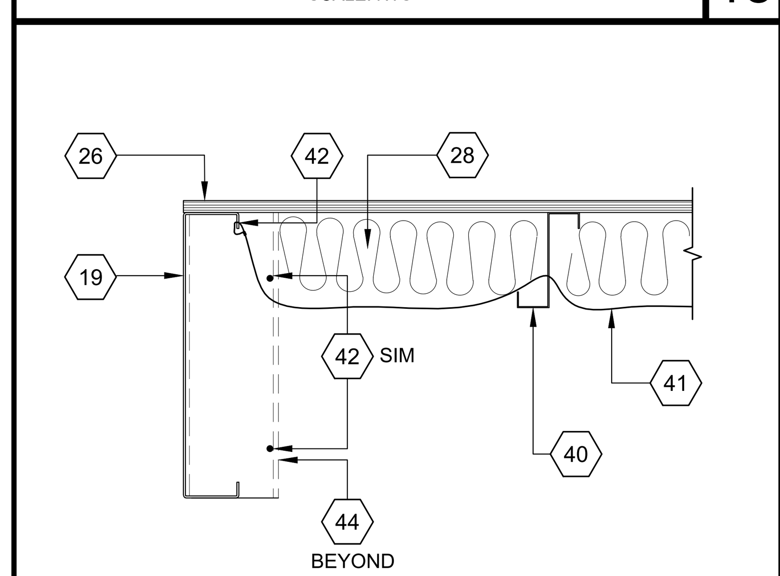


WASHERS AT ROOF
FOR INSULATION STRAP
SCALE: NTS
19

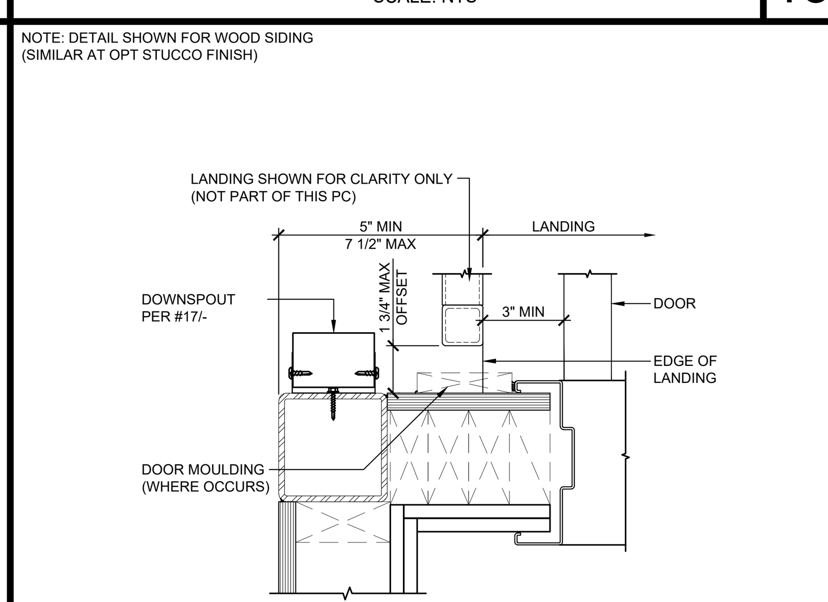


DOWNSPOUT & DECK TERMINATION
SCALE: 3" = 1'-0"
14

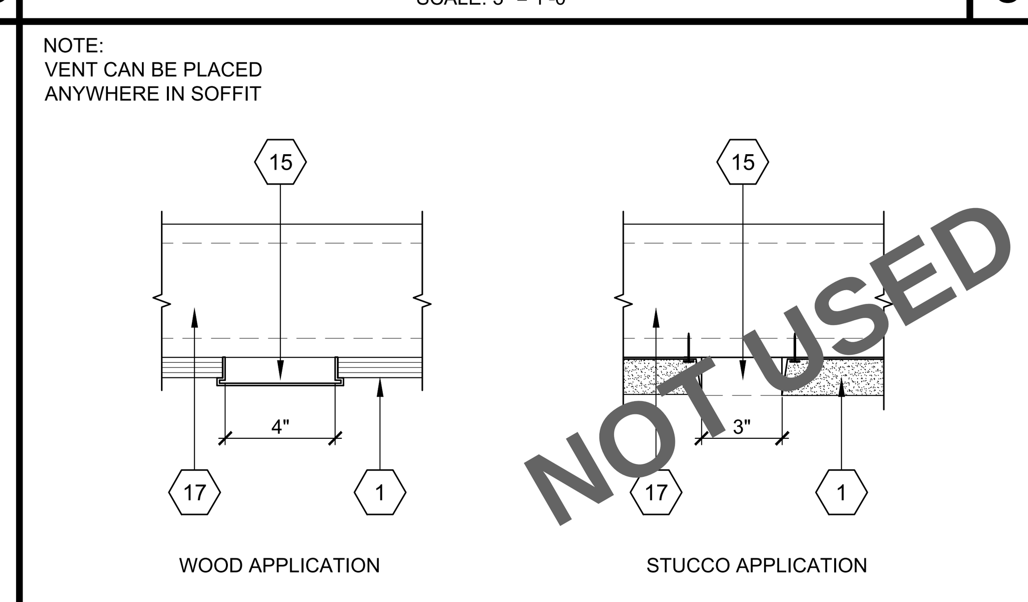


VENT AT OVERHANG SOFFIT
SCALE: 3" = 1'-0"
9

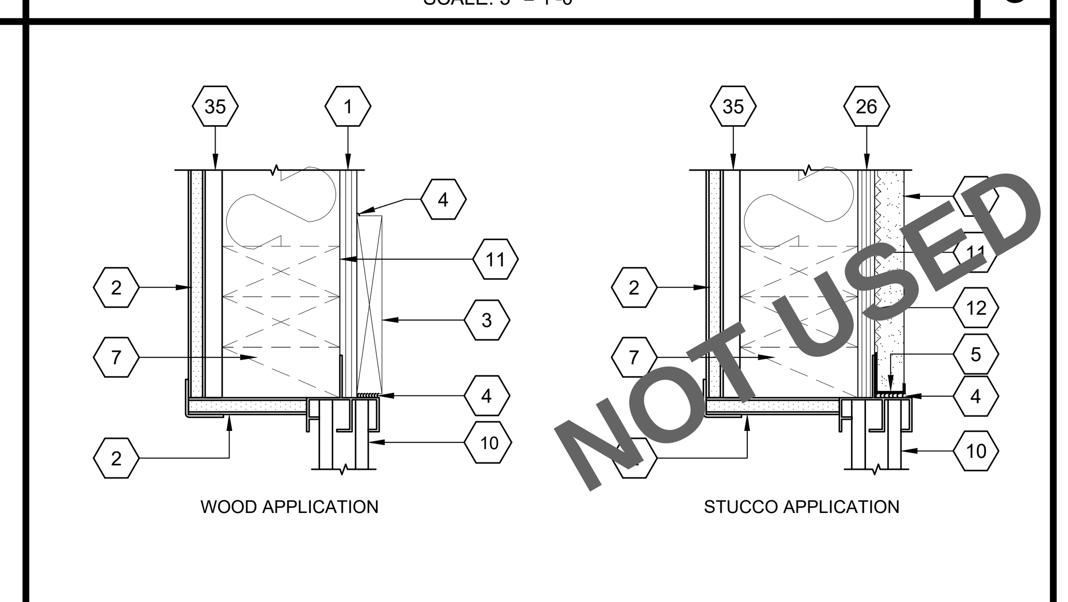


WINDOW JAMB (ALUMINUM FRAME)
SCALE: 3" = 1'-0"
4

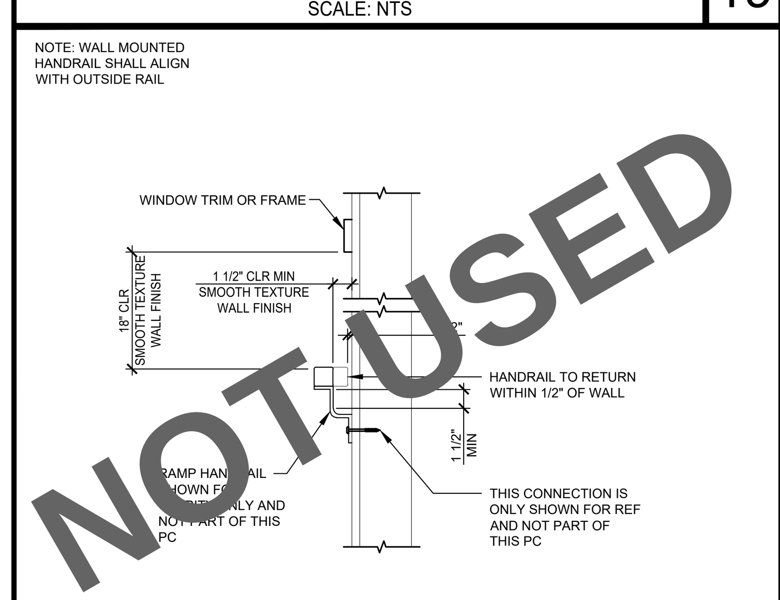


RAMP HANDRAIL ON BLDG
SCALE: 1-1/2" = 1'-0"
20

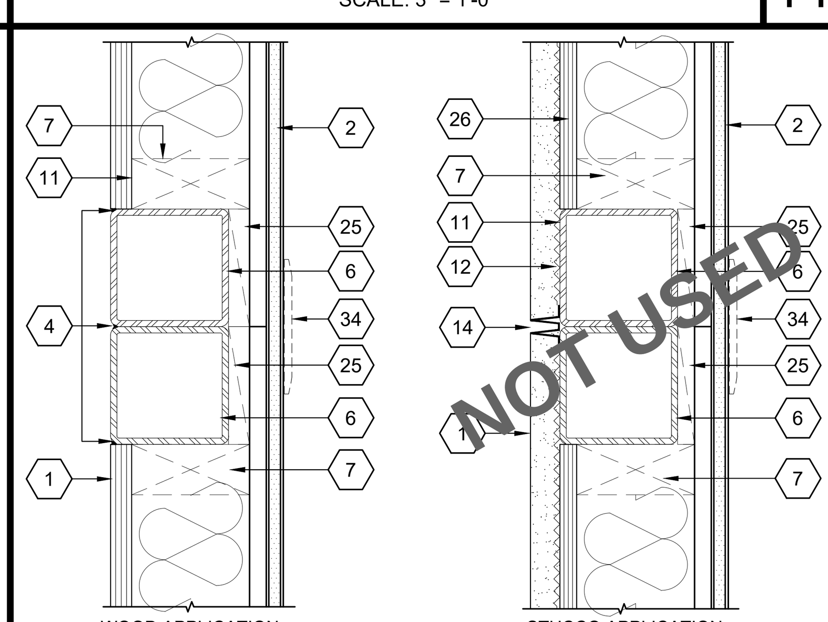


COLUMN AT MODLINE
SCALE: 1-1/2" = 1'-0"
15

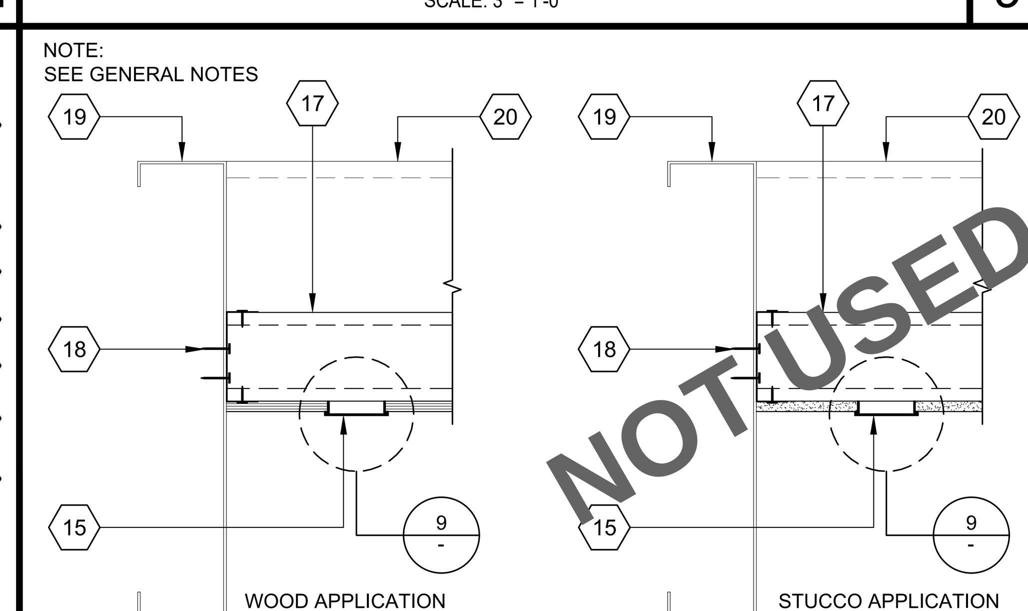


OVERHANG SOFFIT
SCALE: NTS
10

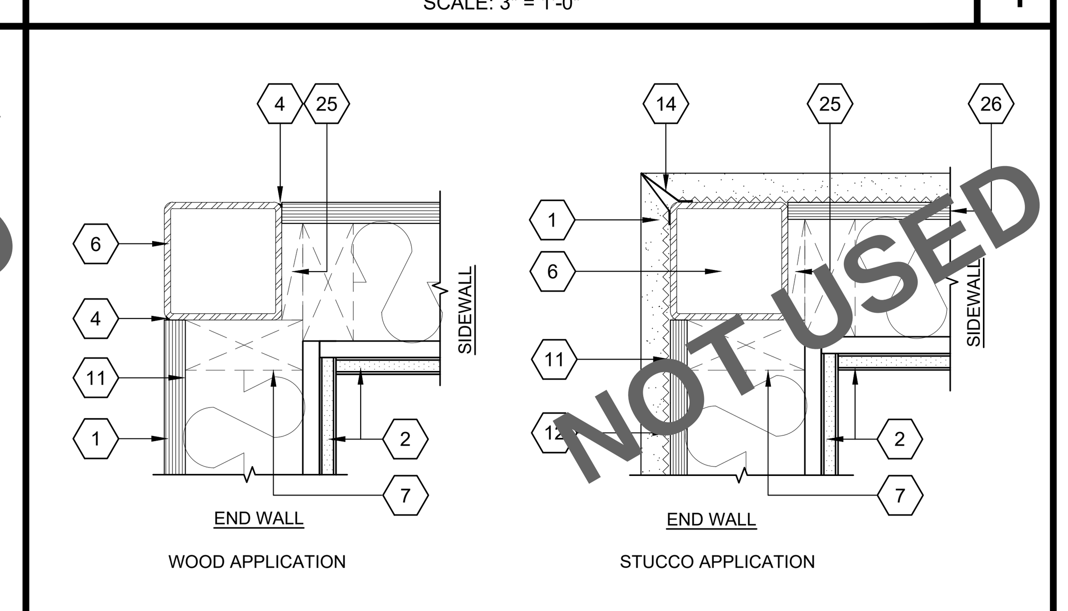


COLUMN AT CORNER
SCALE: 3" = 1'-0"
5

## KEY NOTES

1. EXTERIOR FINISH (SEE CONSTRUCTION MATERIALS SCHEDULE)
2. INTERIOR FINISH, FULL SHEET CLOSURE AT MODULAR JOINT STANDARD (SEE FINISH SCHEDULE). OPTIONAL 4" WALL BATT TRIM PIECE. SEE KEYNOTE 34
3. OPTIONAL TRIM - 5/4 ENGINEERED WOOD TRIM NAILED TO WALL @ 24" OC MAX (SEE NAILING SCHEDULE ON WALL FRAMING ELEVATION SHEET)
4. PINTABLES SEALANT USE ALSO AT LOCATIONS THAT NEED A WATER TIGHT SEAL WHERE EXTERIOR BUILDING MATERIALS MEET
5. J-MOLD
6. COLUMN
7. WALL FRAMING - WOOD STUDS (SEE FRAMING SHEET)
8. DOOR/WINDOW FRAME
9. DOOR (SEE DOOR SCHEDULE)
10. WINDOW (SEE WINDOW SCHEDULE)
11. BUILDING PAPER
12. SELF FURRING METAL LATH
13. 26 GA GALVANIZED SEISMIC FLASHING
14. CONTROL JOINT. 7'-1" A.F.F. OR VERIFY HEIGHT.
15. 4"x10" VENT AT WOOD APPLICATION LOCATED 10" FROM OVERHANG PERIMETER AT EACH 12'-0" WIDE MODULE OVERHANG (SEE RCP) SHEET A2.2 FOR WUI COMPLIANCE

    ~~3" CONTINUOUS AT STUCCO APPLICATION STARTING AT 10" FROM OVERHANG PERIMETER~~
16. 4x BLOCK ATTACHED TO OVERHANG MEMBER WITH MIN #10 X 1-1/2" WS AT 24" OC
17. C-3.5" X 20 GA METAL STUDS @ 16" OC ATTACH STUD TO TRACK WITH #8 SMS AT EACH FLANGE
18. C-3.5" X 20 GA METAL TRACK TO ROOF HEADER WITH (2) #8 SMS AT 12" OC
19. ROOF HEADER/BEAM
20. OVERHANG MEMBER (STRUCTURAL ROOF FRAMING PLAN)
21. PLYWOOD FLOOR (SEE STRUCTURAL FLOOR FRAMING PLAN)
22. FLOOR SYSTEM (SEE STRUCTURAL FLOOR FRAMING PLAN)
23. #12 X 1" MIN SDS @ 24" OC
24. OPTIONAL MODLINE BATT STRIP. SECURE WITH FINISH NAILS AT 24" OC
25. 2X PLYWOOD SPACER
26. PLYWOOD SHEATHING (SEE WALL FRAMING ELEVATION SHEET)
27. ROOF FINISH (SEE SHEET A0.2)
28. ROOF INSULATION
29. PAINTED 8" WIDE LAP SIDING OR 10" WIDE 1/2" CDX PLYWOOD SECURED TO ONE SIDE WITH #12 X 1" MIN FH SDS @ 24" OC MAX
30. NOT USED
31. COMPOSITION FLASHING
32. NOT USED
33. NOT USED
34. OPTIONAL 4" WALL BATT (SAME COLOR AS WALL TACK BOARD). SECURE TO WALL WITH VINYL GLUE AND FINISH NAILS (2) ROWS AT 24" OC. WALL BATT SHALL STOP AT TOP OF WALL BASE. REFER TO KEYNOTE 2 FOR FULL PANEL CLOSURE
35. GYPSUM BOARD (SEE SHEET A0.3 FOR THICKNESS). SECURE WITH MIN #8 X 1-5/8" DRYWALL SCREWS AT 8" MAX OC EDGES AND 12" OC MAX FIELD. FOR FIRE RATED CONDITION, REFER TO SHEET A9.0 & A9.1
36. ATTACH METAL TRACK TO BLOCK WITH (2) #10 WOOD SCREW @ 12" OC
37. 22 GA MIN FLASHING
38. (6) #10x2" RH TEK SCREWS EACH SIDE OF CURB TO ROOF DECK
39. 24 GA METAL STRAP, TOTAL OF (2) TOP AND BOTTOM AT 12" MIN FROM EACH END OF DOWNSPOUT WITH #8 SMS ON EACH SIDE
40. ROOF JOIST
41. STRAP FOR INSULATION
42. WELD WASHER - 1 3/8"Ø X 3/32" THICK WITH 9/16" HOLE, WELD TO UPPER CHANNEL FLANGE
43. ATTACH STRAP TO WALL WITH MIN #10 X 1-1/2" EXT WOOD SCREW FOR WOOD SIDING APPLICATION (MIN #10 X 1" SDS WHERE STEEL OCCURS). FOR STUCCO APPLICATIONS, PRE-DRILL HOLE, USE MIN #10 X 2-1/2" EXT WOOD SCREWS (MIN #10 X 2" SDS WHERE STEEL OCCURS)
44. ROOF STUB COLUMN
45. SEISMIC THRESHOLD. USE #10 STS SECURE TO ONE SIDE ONLY OR INSTALL PER SPECIFIC THRESHOLD MANUFACTURER REQUIREMENTS
46. 3" 10 GA METAL PLATE WELD TO OVERHANG MEMBER FOR METAL STUDS ATTACHMENT. SEE S2.2 OVERHANG CHANEL
47. STUCCO WEEP SCREED (BEHIND BLDG PAPER). INSTALL WITH #10 STS

## GENERAL NOTES

1. EXTERIOR PLYWOOD ATTACHED TO STUDS WITH CORROSION RESISTANT SCREWS (SEE WALL FRAMING ELEVATION SHEET FOR ATTACHMENT INFORMATION)
2. ~~(ALTERNATE EXT WALL FINISH) 7/8" STUCCO FINISH OVER SELF-FURRING LATH OVER FELT PAPER OVER CD-X PLYWOOD HEATING SEE SHEET A0.2 FOR FELT PAPER, SELF-FURRING LATH AND CEMENT ATTACHMENT SEE WALL FRAMING ELEVATION SHEET FOR CD-X PLYWOOD ATTACHMENT NOTE: USE #10 X 3/4" WATERSHED STSMS AT 6" EN & 12" FN~~
3. (STANDARD EXT WALL FINISH) 5/8" PLYWOOD SIDING (DURATEMP) SEE SHEET A0.2 FOR INFORMATION SEE WALL FRAMING ELEVATION SHEET FOR PLYWOOD SIDING ATTACHMENT
4. (STANDARD SOFFIT FINISH) 5/8" PLYWOOD SIDING (DURATEMP) SEE SHEET A0.2 FOR INFORMATION. SEE WALL FRAMING ELEVATION SHEET FOR PLYWOOD SIDING ATTACHMENT (SIMILAR ATTACHMENT)
5. ~~(ALTERNATE SOFFIT FINISH) 7/8" STUCCO FINISH OVER 3/8" SELF-FURRED RIB LATH WITH K-PAPER OVER METAL STUDS. SEE SHEET A0.2 FOR FELT PAPER, RIB LATH AND CEMENT ATTACHMENT. SECURE RIB LATH USE LATH SCREWS MIN #8 X 1-1/4" SDS (MIN 7/16" HEAD DIA) WITH 1-1/4" DIAMETER GALVANIZED STEEL WASHER (BY GRIP-PLATE) AT 7" OC~~
6. SOFFIT NOTE: THE NET FREE VENTILATION AREA SHALL NOT BE LESS THAN 150 OF THE AREA OF THE SPACE TO BE VENTILATED

STATE AGENCY APPROVAL

IDENTIFICATION STAMP
DIV. OF THE STATE ARCHITECT
APP. 04-124098 INC:
REVIEWED FOR
SS ☑ FLS ☑ ACS ☑
DATE: 11/14/24

SKC COMPANY
15345 FAIRFIELD RANCH ROAD, SUITE #160, CHINO, CA 91709
OFFICE: (909) 740-3120, FAX: (909) 726-9470
WEBSITE: WWW.SKCCOMPANY.COM
MANUFACTURER #MF1279666 DEALER # DL1279666
GC LIC # 992118 SBE CERTIFIED

ALL DESIGNS INDICATED ON THESE PLANS/DRAWINGS ARE PROPERTY OF SKC, INC AND ARE FOR THE USE BY SKC IN THE SPECIFIED JOB ONLY. THEY SHALL NOT BE USED AND/OR DUPLICATED OR TRANSMITTED IN ANY FORM, FOR ANY PURPOSE WITHOUT THE PRIOR WRITTEN CONSENT OF SKC, INC. ANY UNAUTHORIZED USE OF THESE PLANS SHALL SUBJECT THE OWNER OF SAID PROPERTY TO LIQUIDATED DAMAGES OF $75,000.00. THESE PLANS ARE PROTECTED UNDER THE PROVISIONS OF THE 1976 COPYRIGHT ACT COPYRIGHT SKC, © ALL RIGHTS RESERVED.

DISTRICT/CUSTOMER NAME: NEXTMOD

SCHOOL/SITE NAME: STOCKPILE

SHEET TITLE:
ARCHITECTURAL
DETAILS
WOOD STUDS

PRE-CHECK (PC) DOCUMENT
CODE: 2022 CBC
A SEPARATE PROJECT APPLICATION FOR
CONSTRUCTION IS REQUIRED

~~APPROVED~~
~~DIV. OF THE STATE ARCHITECT~~
~~APP: 04-122454 PC~~
~~REVIEWED FOR~~
~~SS ☑ FLS ☑ ACS ☑ CG ☑~~
~~DATE: 11/14/2023~~

PROFESSIONAL OF RECORD ON PC

ORION
Structural Engineering, Inc.
11305 RANCHO BERNARDO RD
SUITE 121
SAN DIEGO CA. 92127
PHONE (858) 679-1974

REGISTERED PROFESSIONAL ENGINEER
RYAN J. OVER
No. S 4437
EXP. 12/31/24
STRUCTURAL
STATE OF CALIFORNIA

FIRM: Orion Structural Engineering, Inc.
ADDRESS: 11305 Rancho Bernardo Road Ste 121
CITY: San Diego, CA
PHONE: 858-679-1974

PROJECT SPECIFIC PROFESSIONAL OF RECORD

FIRM:
ADDRESS:
CITY:
PHONE:

REVISIONS

| | |
|---|---|
| 1 | - |
| 2 | - |
| 3 | - |
| 4 | - |
| 5 | - |

| | |
|---|---|
| PROJECT NO.: | 00-0000 |
| DRAFTER: | 00 |
| SCALE: | AS NOTED |
| DATE: | 00-00-00 |

SHEET NUMBER
A8.0

10/31/2023 11:53:52 AM

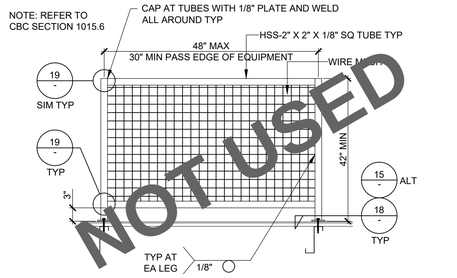


MECHANICAL EQUIPMENT SCREEN 17

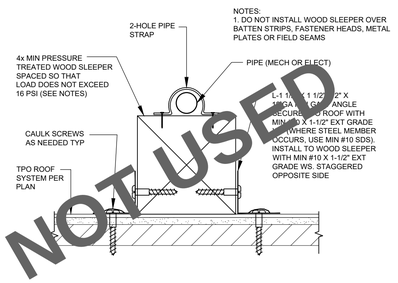


PIPE SUPPORT AT TPO ROOF
SCALE: 6" = 1'-0"
12

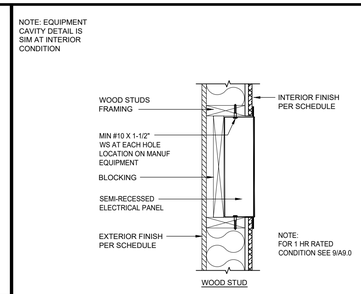


SEMI-RECESSED ELECT PANEL BLOCK-OUT
SCALE: 1-1/2" = 1'-0"
10

UPPPER CASEWORK TO WALL
6

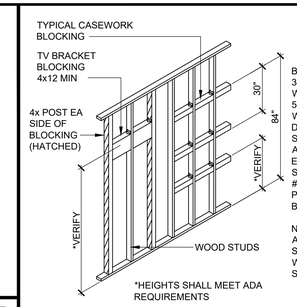


CASEWORK AND TV BLOCKING-WOOD
1

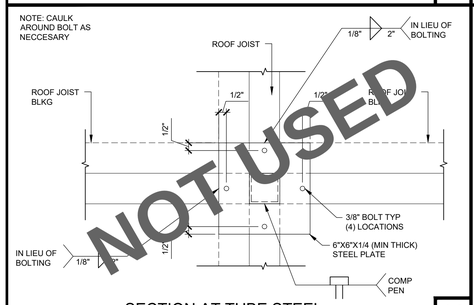


SECTION AT TUBE STEEL
SCALE: 3"=1'-0"
18

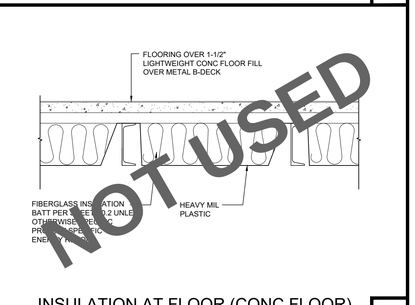


INSULATION AT FLOOR (CONC FLOOR)
SCALE: 1 1/2" = 1'-0"
13

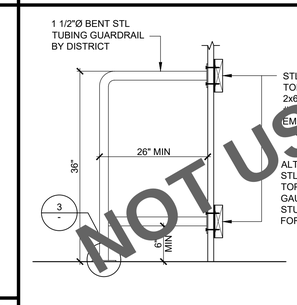


BARRIER BLOCKING
2

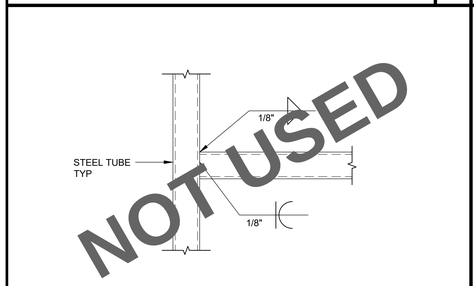


TUBE STEEL ATTACHMENT
19

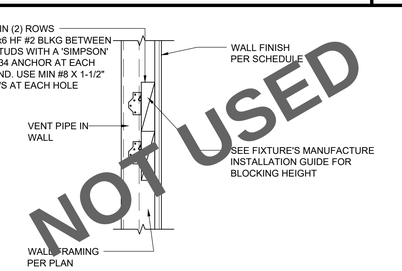


BLOCKING AT FIXTURE
SCALE: 1 1/2" = 1'-0"
14

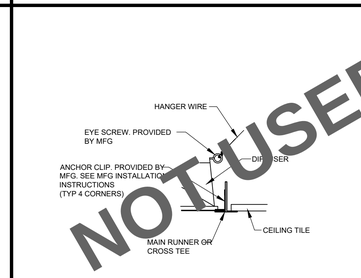


DIFFUSER ATTACHMENT
SCALE: NTS
11

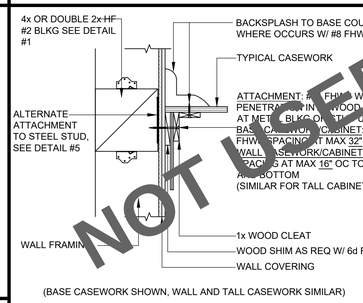


CASEWORK TO WALL AT COUNTERTOP
7

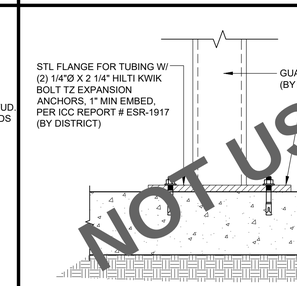


BARRIER FLOOR ATTACHMENT TO CONCRETE
3

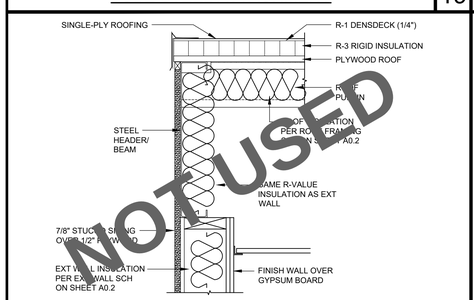


THERMAL ENVELOPE (STUCCO SIDING)
SCALE: 1-1/2" = 1'-0"
20

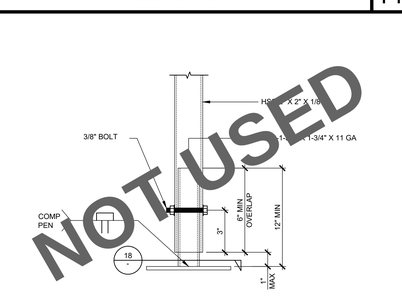


ALT POST TO PLATE
SCALE: 3"=1'-0"
15

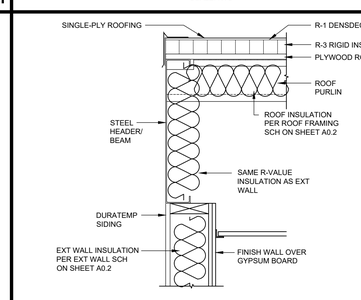


THERMAL ENVELOPE (DURTEMP SIDING)
SCALE: 1-1/2" = 1'-0"
22

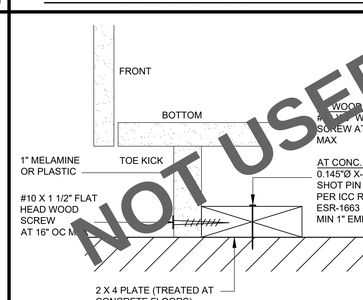


CASEWORK ATTACHMENT AT TOE KICK
8

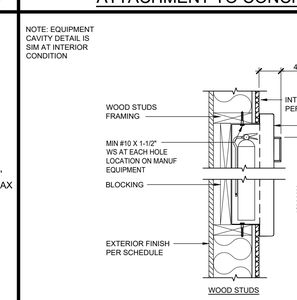


SEMI-RECESSED FIRE EXTINGUISHER CABINET
SCALE: 1-1/2" = 1'-0"
4

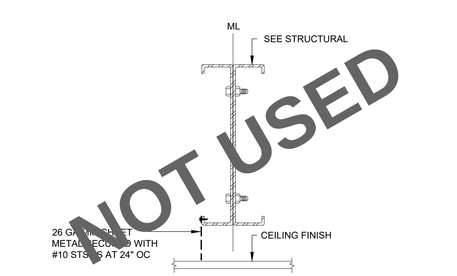


ATTIC DRAFTSTOP DETAIL
21

NOTES:
1. PROVIDE OPENING FOR CROSS-OVERS AS REQUIRED FOR MODULE CONNECTION. CAULK OPENINGS AND JOINTS AS REQUIRED
2. DRAFTSTOPS REQUIRED IF BLDG AREA IS GREATER THAN 3000 SF.

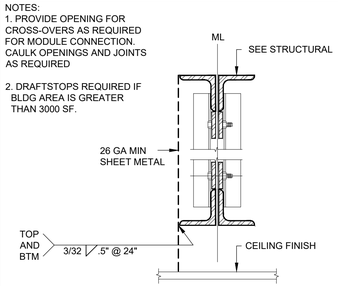


ATTIC DRAFTSTOP DETAIL
16

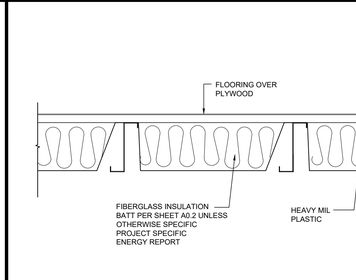


INSULATION AT FLOOR (PLYWOOD)
SCALE: 1 1/2" = 1'-0"
23

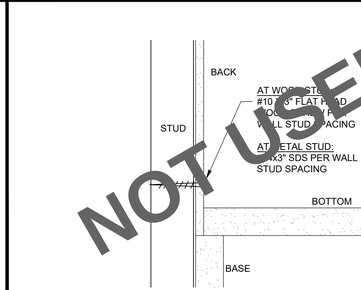


CASEWORK TO WALL BEHIND TOE KICK
9

STATE AGENCY APPROVAL

IDENTIFICATION STAMP
DIV. OF THE STATE ARCHITECT
APP. 04-124098 INC:
REVIEWED FOR
SS ☑ FLS ☑ ACS ☑
DATE: 11/14/24


SKC COMPANY
15345 FAIRFIELD RANCH ROAD, SUITE #160, CHINO, CA 91709
OFFICE: (909) 740-3120, FAX: (909) 726-9470
WEBSITE: WWW.SKCCOMPANY.COM
MANUFACTURER #MF 1279666 DEALER # DL 1279666
GC LIC # 992118 SBE CERTIFIED



ALL DESIGNS INDICATED ON THESE PLANS/DRAWINGS ARE PROPERTY OF SKC, INC AND ARE FOR THE USE BY SKC IN THE SPECIFIED JOB ONLY. THEY SHALL NOT BE USED AND/OR DUPLICATED OR TRANSMITTED IN ANY FORM, FOR ANY PURPOSE WITHOUT THE PRIOR WRITTEN CONSENT OF SKC, INC. ANY UNAUTHORIZED USE OF THESE PLANS SHALL SUBJECT THE OWNER OF SAID PROPERTY TO LIQUIDATED DAMAGES OF $75,000.00. THESE PLANS ARE PROTECTED UNDER THE PROVISIONS OF THE 1976 COPYRIGHT ACT COPYRIGHT SKC, © ALL RIGHTS RESERVED.


DISTRICT/CUSTOMER NAME:
NEXTMOD

SCHOOL/SITE NAME:
STOCKPILE

SHEET TITLE:

ARCHITECTURAL DETAILS

PRE-CHECK (PC) DOCUMENT
CODE: 2022 CBC
A SEPARATE PROJECT APPLICATION FOR CONSTRUCTION IS REQUIRED

APPROVED
DIV. OF THE STATE ARCHITECT
APP: 04-122454 PC
REVIEWED FOR
SS ☑ FLS ☑ ACS ☑ CG ☑
DATE: 11/14/2023

PROFESSIONAL OF RECORD ON PC


ORION Structural Engineering, Inc.
11305 RANCHO BERNARDO RD SUITE 121
SAN DIEGO CA 92127
PHONE: (858) 679-1974
RYAN J. OLSEN
EXP. 12/31/24
STRUCTURAL
STATE OF CALIFORNIA


FIRM: Orion Structural Engineering, Inc.
ADDRESS: 11305 Rancho Bernardo Road Ste 121
CITY: San Diego, CA
PHONE: 858-679-1974

PROJECT SPECIFIC PROFESSIONAL OF RECORD

FIRM:
ADDRESS:
CITY:
PHONE:

REVISIONS
1 -
2 -
3 -
4 -
5 -

| | |
|---|---|
| PROJECT NO.: | 00-0000 |
| DRAFTER: | 00 |
| SCALE: | AS NOTED |
| DATE: | 00-00-00 |

SHEET NUMBER
A8.1

10/31/2023 11:54:07 AM

16

11

6

1

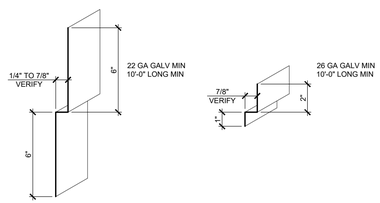


## 'Z' FLASHING

SCALE: 3" = 1'-0"

17

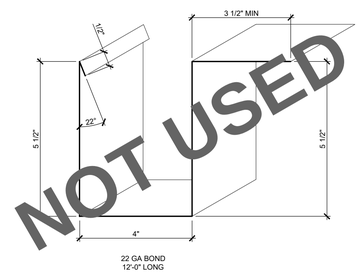


## GUTTER FOR SINGLE PLY (STUCCO)

SCALE: 6" = 1'-0"

12

7

2

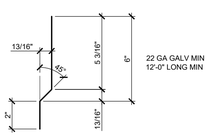


## ALTERNATIVE 'Z' FLASHING

SCALE: 3" = 1'-0"

18

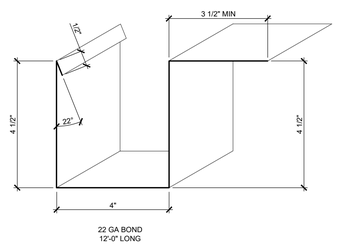


## GUTTER FOR SINGLE PLY

SCALE: 3" = 1'-0"

13

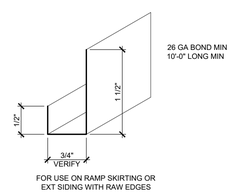


## 'J' METAL FOR SIDING

SCALE: 3" = 1'-0"

8

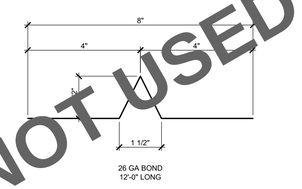


## OVERHANG SEIMIC FLASHING

SCALE: 6" = 1'-0"

3

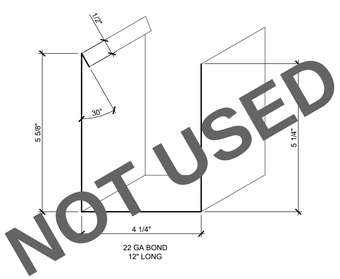


## GUTTER SPLICE FOR SINGLE PLY (STUCCO)

SCALE: 6" = 1'-0"

19

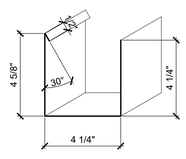


## GUTTER SPLICE FOR SINGLE PLY

SCALE: 3" = 1'-0"

14

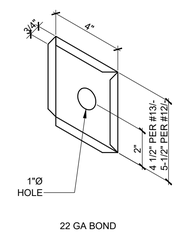


## SINGLE PLY GUTTER END CAP

SCALE: 3" = 1'-0"

9

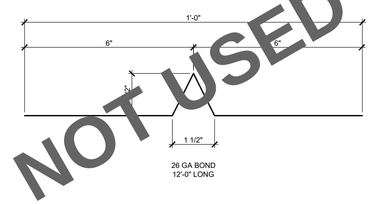


## SINGLE PLY ROOF SEPARATION SEIMIC FLASHING

SCALE: 6" = 1'-0"

4

20

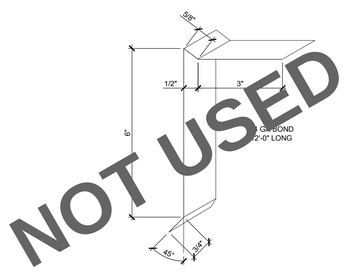


## TPO GRAVEL STOP (STUCCO)

SCALE: 6" = 1'-0"

15

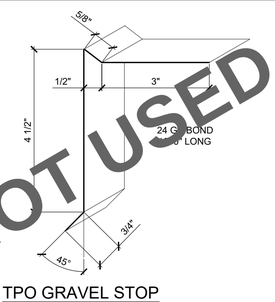


## TPO GRAVEL STOP

SCALE: 6" = 1'-0"

10

5

## GENERAL NOTES

1. USE 1/8" BEND RADIUS AT EACH BEND
2. THE DIMENSIONS SHOWS ARE SUBJECT TO CHANGE DUE TO CONSTRUCTION TOLERANCES AND OR SITE SPECIFIC CONDITIONS. IN NO WAY SHAPE OR FORM, THE GAUGE THICKNESS CAN NOT BE THINNER THAN SHOWN ON THE PLAN UNO

## ABBREVIATIONS

| | |
|---|---|
| BOND: | BONDERIZED |
| GA: | GAUGE |
| GALV: | GALVANIZED |
| ID: | INSIDE DIMENSION |
| LH: | LEFT HAND |
| MAX: | MAXIMUM |
| MIN: | MINIMUM |
| NTS: | NOT TO SCALE |
| RH: | RIGHT HAND |
| TPO: | THERMOPLASTIC POLYOLEFINS |

STATE AGENCY APPROVAL

IDENTIFICATION STAMP
DIV. OF THE STATE ARCHITECT
APP. 04-124098 INC:
REVIEWED FOR
SS ☑ FLS ☑ ACS ☑
DATE: 11/14/24


SKC COMPANY
15345 FAIRFIELD RANCH ROAD, SUITE #160, CHINO, CA 91709
OFFICE: (909) 740-3120, FAX: (909) 726-9470
WEBSITE: WWW.SKCCOMPANY.COM
MANUFACTURER #MF 1279666 DEALER # DL1279666
GC LIC # 992118 SBE CERTIFIED



ALL DESIGNS INDICATED ON THESE PLANS/DRAWINGS ARE PROPERTY OF SKC, INC AND ARE FOR THE USE BY SKC IN THE SPECIFIED JOB ONLY. THEY SHALL NOT BE USED AND/OR DUPLICATED OR TRANSMITTED IN ANY FORM, FOR ANY PURPOSE WITHOUT THE PRIOR WRITTEN CONSENT OF SKC, INC. ANY UNAUTHORIZED USE OF THESE PLANS SHALL SUBJECT THE OWNER OF SAID PROPERTY TO LIQUIDATED DAMAGES OF $75,000.00. THESE PLANS ARE PROTECTED UNDER THE PROVISIONS OF THE 1976 COPYRIGHT ACT COPYRIGHT SKC, © ALL RIGHTS RESERVED.


DISTRICT/CUSTOMER NAME:
NEXTMOD

SCHOOL/SITE NAME:
STOCKPILE

SHEET TITLE:

SHEET METAL
AND
FLASHING DETAILS

PRE-CHECK (PC) DOCUMENT
CODE: 2022 CBC
A SEPARATE PROJECT APPLICATION FOR CONSTRUCTION IS REQUIRED

APPROVED
DIV. OF THE STATE ARCHITECT
APP: 04-122454 PC
REVIEWED FOR
SS ☑ FLS ☑ ACS ☑ CG ☑
DATE: 11/14/2023

PROFESSIONAL OF RECORD ON PC


ORION
Structural Engineering, Inc.
11305 RANCHO BERNARDO RD
SUITE 121
SAN DIEGO CA, 92127
PHONE (858) 679-1974
REGISTERED PROFESSIONAL ENGINEER
EXP. 12/31/24
STRUCTURAL
STATE OF CALIFORNIA


FIRM: Orion Structural Engineering, Inc.
ADDRESS: 11305 Rancho Bernardo Road Ste 121
CITY: San Diego, CA
PHONE: 858-679-1974

PROJECT SPECIFIC PROFESSIONAL OF RECORD

FIRM:
ADDRESS:
CITY:
PHONE:

REVISIONS

1 -
2 -
3 -
4 -
5 -

| | |
|---|---|
| PROJECT NO.: | 00-0000 |
| DRAFTER: | 00 |
| SCALE: | AS NOTED |
| DATE: | 00-00-00 |

SHEET NUMBER

A8.2

10/31/2023 11:54:21 AM

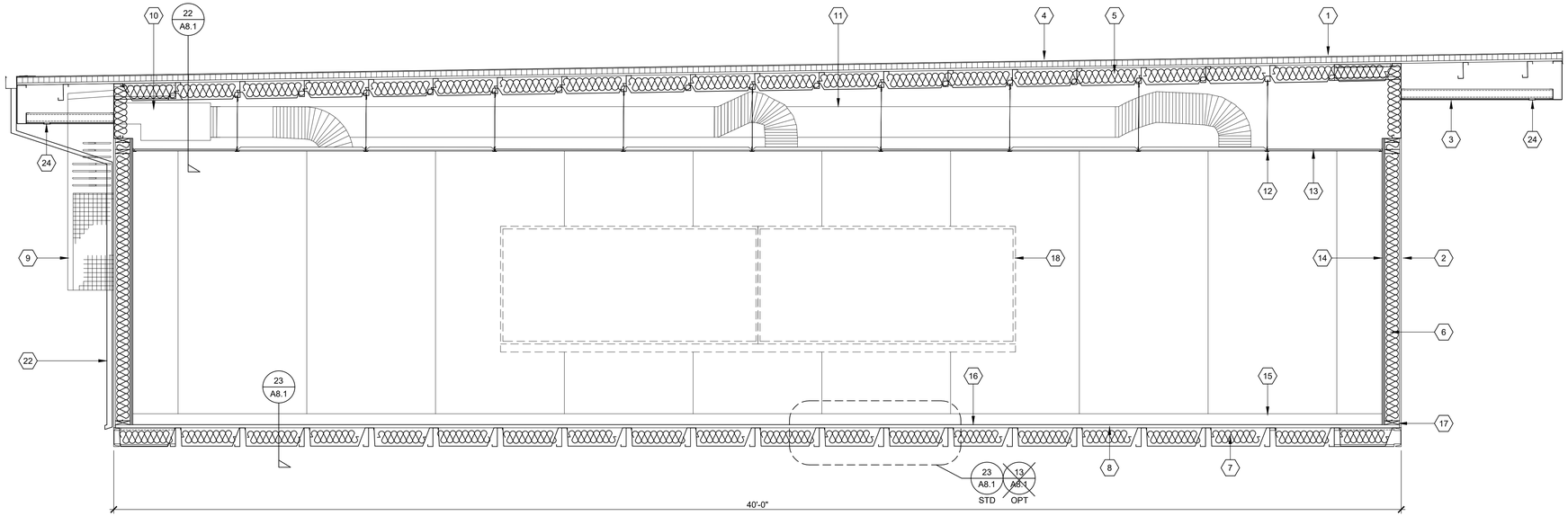


## LONGITUDINAL SECTION

SCALE: 1/2" = 1'-0"

A

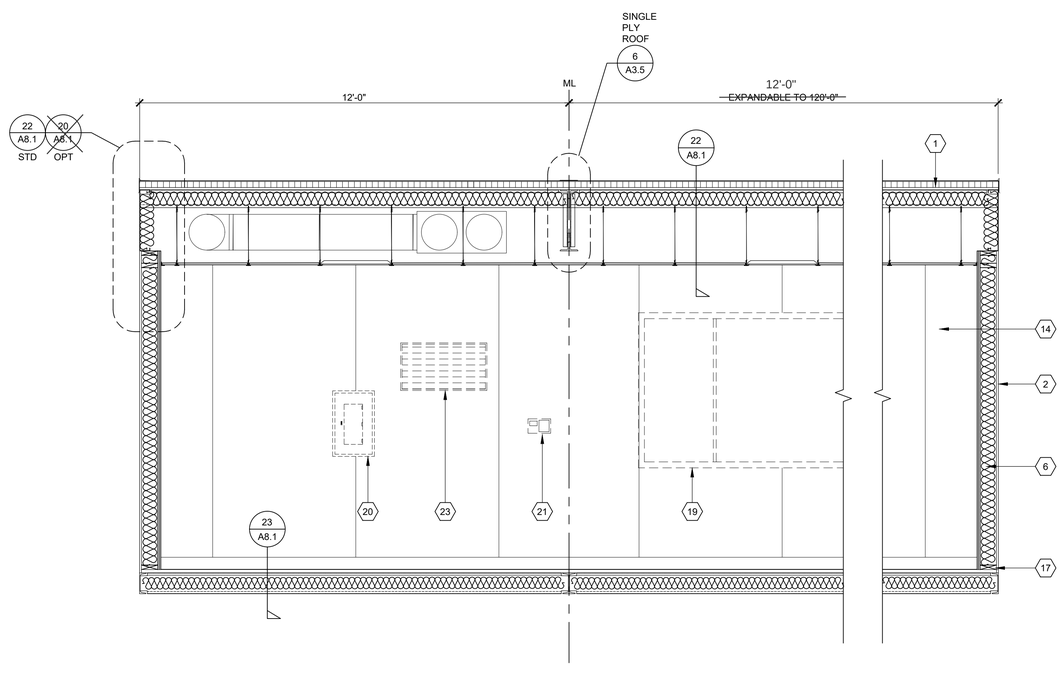


## TRANSVERSE SECTION

SCALE: 1/2" = 1'-0"

B

## KEY NOTES

1. TPO (SINGLE-PLY) ROOFING OVER 3" RIGID BOARD INSULATION OVER 1/4" DENSDECK OVER PLYWOOD (STANDARD ROOF)
2. 5/8" (19/32) DURATEMP SIDING OVER BUILDNG STANDARD FLUSHED BUILDING STEEL (OPTIONAL: 7/8" STUCCO OVER PLYWOOD AND BUILDING STEEL)
3. ENCLOSED SOFFIT TO MATCH SAME FINISH AS BODY
4. SINGLE SLOPE ROOF SHOWN (OPTIONAL: DUAL SLOPE SEE SHEET A14.0)
5. ROOF INSULATION. SEE SHEET A0.2 FOR R-VALUE
6. WALL INSULATION. SEE SHEET A0.2 FOR R-VALUE. REFER TO DETAILS ON SHEET A8.1
7. FLOOR INSULATION. SEE SHEET A0.2 FOR R-VALUE
8. PLYWOOD FLOOR DIAPHRAGM STANDARD (OPTIONAL: 3-1/2" LIGHTWEIGHT CONCRETE FILL OVER METAL B-DECK)
9. WALL MOUNT HVAC STANDARD (OPTIONAL: ROOF MOUNT HVAC)
10. HVAC WALL PLENUM FOR SUPPLY AIR
11. HVAC DUCT PER MECHANICAL PLAN
12. SUSPENDED CEILING GRID PER SHEET A2.0
13. SQUARE EDGE DROP-IN CEILING TILES
14. VINYL TACKBOARD OVER DRYWALL STANDARD (OPTIONAL: MUD, TAPE, TEXTURE & PAINT OR FRP)
15. RUBBER BASE PER SHEET A0.3
16. FINISH FLOORING PER SHEET A0.3
17. WOOD STUD FRAMING STANDARD
18. MARKERBOARD WHERE APPLIES PER FLOOR PLAN
19. WINDOW WHERE APPLIES PER FLOOR PLAN
20. ELECTRICAL PANEL WHERE APPLIES PER FLOOR PLAN
21. THERMOSTAT WHERE APPLIES PER MECHANICAL PLANS
22. GUTTER AND DOWNSPOUTS
23. HVAC WALL MOUNT WALL RETURN GRILL WHERE APPLIES PER MECHANICAL PLANS
24. SOFFIT VENTS PER REFLECTED CEILING PLANS

STATE AGENCY APPROVAL

IDENTIFICATION STAMP
DIV. OF THE STATE ARCHITECT
APP. 04-124098 INC:
REVIEWED FOR
SS ☑ FLS ☑ ACS ☑
DATE: 11/14/24


SKC COMPANY
15345 FAIRFIELD RANCH ROAD, SUITE #160, CHINO, CA 91709
OFFICE: (909) 740-3120, FAX: (909) 726-9470
WEBSITE: WWW.SKCCOMPANY.COM
MANUFACTURER #MF1279666 DEALER # DL1279666
GC LIC # 992118 SBE CERTIFIED



ALL DESIGNS INDICATED ON THESE PLANS/DRAWINGS ARE PROPERTY OF SKC, INC AND ARE FOR THE USE BY SKC IN THE SPECIFIED JOB ONLY. THEY SHALL NOT BE USED AND/OR DUPLICATED OR TRANSMITTED IN ANY FORM, FOR ANY PURPOSE WITHOUT THE PRIOR WRITTEN CONSENT OF SKC, INC. ANY UNAUTHORIZED USE OF THESE PLANS SHALL SUBJECT THE OWNER OF SAID PROPERTY TO LIQUIDATED DAMAGES OF $75,000.00. THESE PLANS ARE PROTECTED UNDER THE PROVISIONS OF THE 1976 COPYRIGHT ACT COPYRIGHT SKC, © ALL RIGHTS RESERVED.


DISTRICT/CUSTOMER NAME:
NEXTMOD

SCHOOL/SITE NAME:
STOCKPILE

SHEET TITLE:

ARCHITECTURAL
BUILDING SECTIONS
MONO SLOPE

PRE-CHECK (PC) DOCUMENT
CODE: 2022 CBC
A SEPARATE PROJECT APPLICATION FOR CONSTRUCTION IS REQUIRED

APPROVED
DIV. OF THE STATE ARCHITECT
APP: 04-122454 PC
REVIEWED FOR
SS ☑ FS ☑ ACS ☑ CG ☑
DATE: 11/14/2023

PROFESSIONAL OF RECORD ON PC


ORION
Structural Engineering, Inc.
11305 RANCHO BERNARDO RD
SUITE 121
SAN DIEGO CA, 92127
PHONE (858) 679-1974


REGISTERED PROFESSIONAL ENGINEER
ALAN J. OTTE
No. 3237
Exp. 12/31/24
STRUCTURAL
STATE OF CALIFORNIA

FIRM: Orion Structural Engineering, Inc.
ADDRESS: 11305 Rancho Bernardo Road Ste 121
CITY: San Diego, CA
PHONE: 858-679-1974

PROJECT SPECIFIC PROFESSIONAL OF RECORD

FIRM:
ADDRESS:
CITY:
PHONE:

REVISIONS

1 -
2 -
3 -
4 -
5 -

| | |
|---|---|
| PROJECT NO.: | 00-0000 |
| DRAFTER: | 00 |
| SCALE: | AS NOTED |
| DATE: | 00-00-00 |

SHEET NUMBER

# A13.0

10/31/2023 2:18:38 PM

| SCHEDULE | | |
|---|---|---|
| ITEM | USING 12 FT SILL PLATE | MIN QTY OF PIPES |
| PERIMETER | 10 | 20 |
| MODLINES | | 10 |

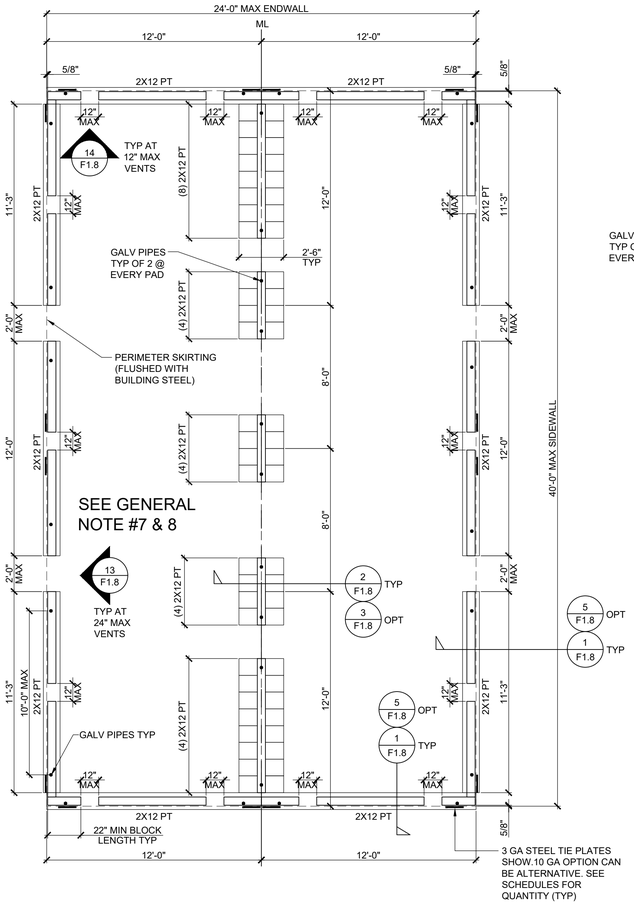


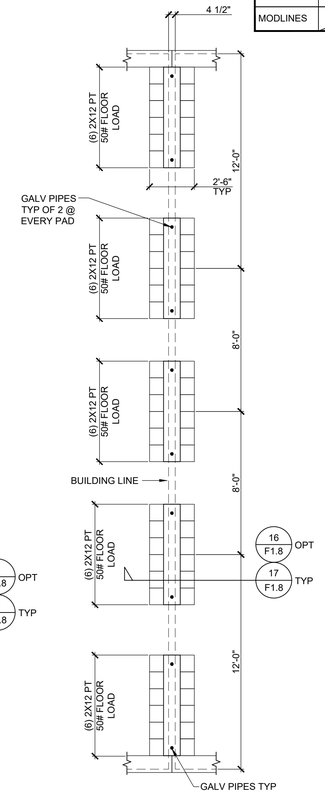


## FOUNDATION PLAN FOR 50+15, 100 & 125 FLOOR LOADS

SCALE: 1/4" = 1'-0"

| SCHEDULE | | |
|---|---|---|
| ITEM | USING 12 FT SILL PLATE | MIN QTY OF PIPES |
| PERIMETER | 10 | 20 |
| MODLINES | | 10 |

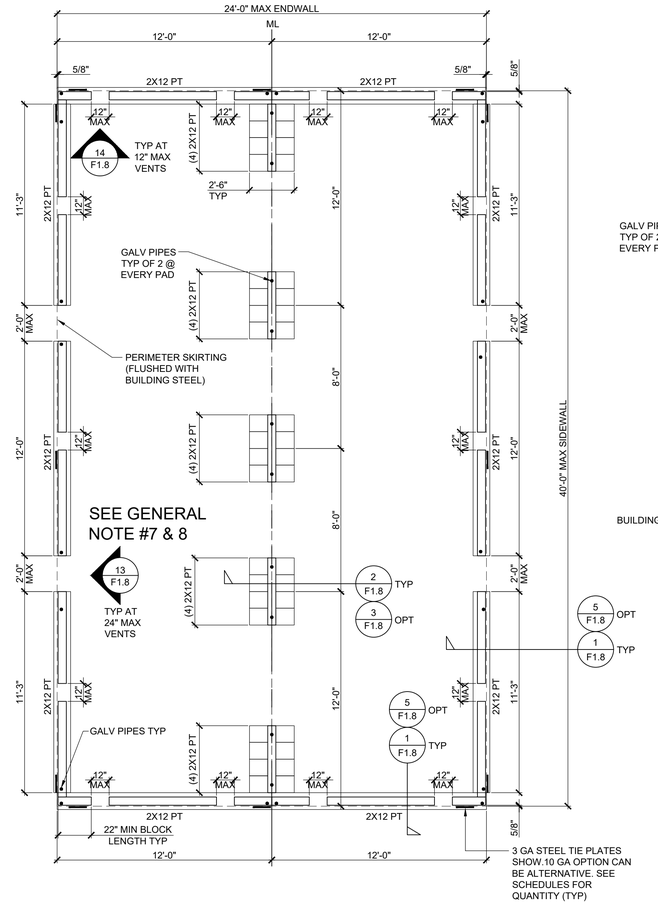


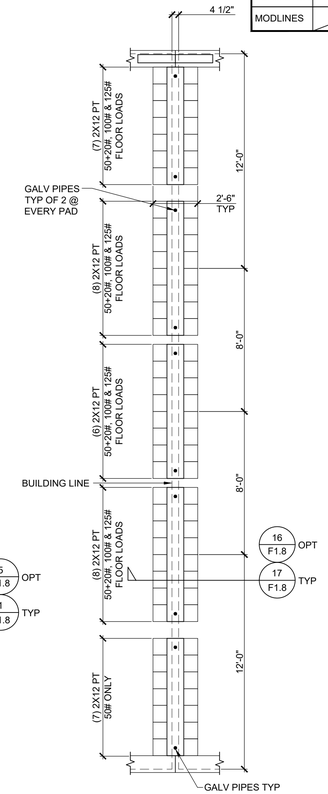


## FOUNDATION PLAN FOR 50# FLOOR LOAD

SCALE: 1/4" = 1'-0"

## GENERAL NOTES:

1. DESIGN ALLOWABLE SOIL BEARING PRESSURE - 1000 PSF
2. ALL FOUNDATION LUMBER SHALL BE HF #2 ALL LUMBER IN CONTACT WITH GRADE SHALL BE STAMPED "FOR GROUND CONTACT" ALL FOUNDATION FASTENERS SHALL BE CORRISION RESISTANT PER 2304.9.5
3. CONTINUOUS TOP PLATE NOT SHOWN FOR CLARITY
4. MAXIMUM 2,160 SQ FT FOR STAND-ALONE WOOD PAD FOUNDATION SYSTEM PER DSA IR 16-1.13
5. MINIMUM (3) SIDES FOR CROSS VENTILATION
6. THE ENDWALL SIDE MUST BE VENTED
7. OPTION - PER SECTION 1202.4.1.2 THE TOTAL AREA OF VENTILATION OPENINGS IS PERMITTED TO BE REDUCED TO 1/1500 OF THE UNDER-FLOOR AREA WHERE THE GROUND SURFACE IS COVERED WITH A CLASS I VAPOR RETARDER MATERIAL AND THE REQUIRED OPENINGS ARE PLACED SO AS TO PROVIDE CROSS VENTILATION OF THE SPACE. THE INSTALLATION OF OPERABLE LOUVERS SHALL NOT BE PROHIBITED
8. THE 24" WIDE MAX VENT OPENING AT THE SIDEWALL IS A FIX LOCATION. REFER TO DETAIL #X/XX FOR BLOCK-OUT REQUIREMENTS. THE 12" WIDE MAX VENT OPENING CAN BE LOCATED ANYWHERE ON THE FOUNDATION ABIDING BY DETAIL #X/XX BLOCK-OUT REQUIREMENTS. WHEN RAMPS, LANDINGS OR STAIRS ARE USED, THE VENT AREAS THAT ARE ACCOUNTED FOR TO MEET THE MIN VENTILATION REQUIREMENTS MUST EITHER BE RELOCATED OR THE RAMP, LANDING OR STAIRS MUST ALSO BE VENTED TO ALLOW VENTILATION

| ENDWALL PLATE & BLOCK SCHEDULE | | | | |
|---|---|---|---|---|
| FLOOR LIVE LOAD PSF | 50 | 50+15 | 100 | 125 |
| SILL PLATE | 2x12 CONT | 2x12 CONT | 2x12 CONT | 2x12 CONT |
| BLOCK PLATE | 2x6 | 2x6 | 2x8 | 2x8 |
| BLOCK PLATE | 2x6 | 2x6 | 2x6 | 2x6 |
| CONT. TOP PLATE | 2x4 | 2x4 | 2x6 | 2x6 |

| SIDEWALL PLATE & BLOCK SCHEDULE | | | | |
|---|---|---|---|---|
| FLOOR LIVE LOAD PSF | 50 | 50+15 | 100 | 125 |
| SILL PLATE | 2x12 CONT | 2x12 CONT | 2x12 CONT | 2x12 CONT |
| BLOCK PLATE | 2x6 | 2x6 | 2x8 | 2x8 |
| BLOCK PLATE | 2x6 | 2x6 | 2x6 | 2x6 |
| CONT. TOP PLATE | 2x4 | 2x4 | 2x6 | 2x6 |

| WOOD PAD FOUNDATION (MODLINE) | | | | |
|---|---|---|---|---|
| FLOOR LIVE LOAD PSF | 50 | 50+15 | 100 | 125 |
| SILL PLATE | 2x12 S/S | 2x12 S/S | 2x12 S/S | 2x12 S/S |
| BLOCK PLATE | 2x8 CONT | 2x8 CONT | 2x10 CONT | 2x10 CONT |
| BLOCK PLATE | 2x6 CONT | 2x6 CONT | 2x8 CONT | 2x8 CONT |
| CONT. TOP PLATE | 2x6 CONT | 2x6 CONT | 2x8 CONT | 2x8 CONT |

| WOOD PAD FOUNDATION (SEPARATION) | | | | |
|---|---|---|---|---|
| FLOOR LIVE LOAD PSF | 50 | 50+15 | 100 | 125 |
| SILL PLATE | SEE PLAN | SEE PLAN | SEE PLAN | SEE PLAN |
| BLOCK PLATE | 2x10 CONT | 2x10 CONT | 2x12 CONT | 2x12 CONT |
| BLOCK PLATE | 2x10 CONT | 2x10 CONT | 2x12 CONT | 2x12 CONT |
| CONT. TOP PLATE | 2x10 CONT | 2x10 CONT | 2x12 CONT | 2x12 CONT |

| 10 GA. TIE PLATE SCHEDULE | | | | |
|---|---|---|---|---|
| BUILDING SIZE | FLOOR LOAD PSF | PER EA SIDE ENDWALL | PER EA SIDE SIDEWALL | GRAND TOTAL |
| 24'x40' | 50 | 5 | 5 | 20 |
| | 50+15 | 7 | 7 | 28 |
| | 100 | 5 | 5 | 20 |
| | 125 | 8 | 8 | 44 |

| 3 GA. TIE PLATE SCHEDULE | | | | |
|---|---|---|---|---|
| BUILDING SIZE | FLOOR LOAD PSF | PER EA SIDE ENDWALL | PER EA SIDE SIDEWALL | GRAND TOTAL |
| 24'x40' | 50 | 3 | 3 | 12 |
| | 50+15 | 4 | 4 | 16 |
| | 100 | 3 | 3 | 12 |
| | 125 | 5 | 5 | 20 |

NOTE:
ALL LUMBER SHALL BE DF#2 WHEN USING THE 3 GA TIE PLATE OPTION

| LAG SCH AT SEPARATION | | |
|---|---|---|
| FLOOR LOAD PSF | PER EA SIDE ENDWALL | PER EA SIDE SIDEWALL |
| 50 | 6 | 3 |
| 50+15 | 7 | 4 |
| 100 | 6 | 3 |
| 125 | 9 | 5 |

## VENTILATION FORMULA (BASED ON 4 1/2" PAD HEIGHT)

BUILDING SQUARE FOOTAGE: 24' X 40' = 960 SF

REQUIRED VENTILATION: 1 SF / 150 SF (ALLOWED BY CODE)
960 SF / 150 SF = 6.4 SF NET VENTILATION REQUIRED

(V1) 24" MAX VENTS TO BE : 4
24" X 3" = 72 / 144 = 0.5 SF
TOTAL VENTILATION: (4) VENTS X 0.5 = 2.0 SF X 50% SCREEN POROSITY = 1.0 SF

(V2) 12" MAX VENTS TO BE USE: 92
12" X 1.5" = 18 / 144 = 0.125 SF
TOTAL VENTILATION: (92) VENTS X 0.125 = 11.5 SF X 50% SCREEN POROSITY = 5.75 SF

OVERALL VENTILATION:
1.0 + 8.75 = 9.75 SF

6.75 SF > 6.4 SF VENTILATION REQUIREMENT = OK

NOTE:
ADDITIONAL 12" MAX VENTS WILL BE REQUIRED WHEN FOUNDATION PAD HEIGHT IS LESS THAN 6" INCLUDING SITE CONDITIONS WHERE THE 24" MAX FIXED VENT IS BLOCKED OR SLOPED GRADES. THE 12" MAX VENT CAN BE INSTALLED ANYWHERE ON THE PLAN ABIDING BY DETAIL #14/F1.8

## VENTILATION FORMULA (BASED ON 6" PAD HEIGHT)

BUILDING SQUARE FOOTAGE: 24' X 40' = 960 SF

REQUIRED VENTILATION: 1 SF / 150 SF (ALLOWED BY CODE)
960 SF / 150 SF = 6.4 SF NET VENTILATION REQUIRED

(V1) 24" MAX VENTS TO BE : 4
24" X 4.5" = 72 / 144 = 0.5 SF
TOTAL VENTILATION: (4) VENTS X 0.75 = 3.0 SF X 50% SCREEN POROSITY = 1.5 SF

(V2) 12" MAX VENTS TO BE USE: 40
12" X 3" = 18 / 144 = 0.25 SF
TOTAL VENTILATION: (40) VENTS X 0.25 = 10.0 SF X 50% SCREEN POROSITY = 5.0 SF

OVERALL VENTILATION:
1.5 + 5.0 = 6.5 SF

6.5 SF > 6.4 SF VENTILATION REQUIREMENT = OK

NOTE:
ADDITIONAL 12" MAX VENTS WILL BE REQUIRED WHEN FOUNDATION PAD HEIGHT IS LESS THAN 6" INCLUDING SITE CONDITIONS WHERE THE 24" MAX FIXED VENT IS BLOCKED OR SLOPED GRADES. THE 12" MAX VENT CAN BE INSTALLED ANYWHERE ON THE PLAN ABIDING BY DETAIL #14/F1.8

STATE AGENCY APPROVAL


SKC COMPANY
15345 FAIRFIELD RANCH ROAD, SUITE #160, CHINO, CA 91709
OFFICE: (909) 740-3120, FAX: (909) 726-9470
WEBSITE: WWW.SKCCOMPANY.COM
MANUFACTURER #MF1275666 DEALER # DL1275666
GC LIC # 992118 SBE CERTIFIED



ALL DESIGNS INDICATED ON THESE PLANS/DRAWINGS ARE PROPERTY OF SKC, INC AND ARE FOR THE USE BY SKC IN THE SPECIFIED JOB ONLY. THEY SHALL NOT BE USED AND/OR DUPLICATED OR TRANSMITTED IN ANY FORM, FOR ANY PURPOSE WITHOUT THE PRIOR WRITTEN CONSENT OF SKC, INC. ANY UNAUTHORIZED USE OF THESE PLANS SHALL SUBJECT THE OWNER OF SAID PROPERTY TO LIQUIDATED DAMAGES OF $75,000.00. THESE PLANS ARE PROTECTED UNDER THE PROVISIONS OF THE 1976 COPYRIGHT ACT COPYRIGHT SKC, © ALL RIGHTS RESERVED.


DISTRICT/CUSTOMER NAME:

SCHOOL/SITE NAME:

SHEET TITLE:

# WOOD PAD FOUNDATION PLAN
# 24 X 40

PRE-CHECK (PC) DOCUMENT
CODE: 2022 CBC
A SEPARATE PROJECT APPLICATION FOR CONSTRUCTION IS REQUIRED

APPROVED
DIV. OF THE STATE ARCHITECT
APP: 04-122454 PC
REVIEWED FOR
SS ☑ FLS ☑ ACS ☑ CG ☑
DATE: 11/14/2023

PROFESSIONAL OF RECORD ON PC


ORION
Structural Engineering, Inc.
11305 RANCHO BERNARDO RD
SUITE 121
SAN DIEGO CA 92127
PHONE (858) 679-1974


REGISTERED PROFESSIONAL ENGINEER
SAM J. OTER
No. S6537
EXP. 12/31/24
STRUCTURAL
STATE OF CALIFORNIA

FIRM: Orion Structural Engineering, Inc.
ADDRESS: 11305 Rancho Bernardo Road Ste 121
CITY: San Diego, CA
PHONE: 858-679-1974

PROJECT SPECIFIC PROFESSIONAL OF RECORD

FIRM:
ADDRESS:
CITY:
PHONE:

REVISIONS

1 -
2 -
3 -
4 -
5 -

| | |
|---|---|
| PROJECT NO.: | 00-0000 |
| DRAFTER: | 00 |
| SCALE: | AS NOTED |
| DATE: | 00-00-00 |

SHEET NUMBER

# F1.1

10/31/2023 12:00:53 PM

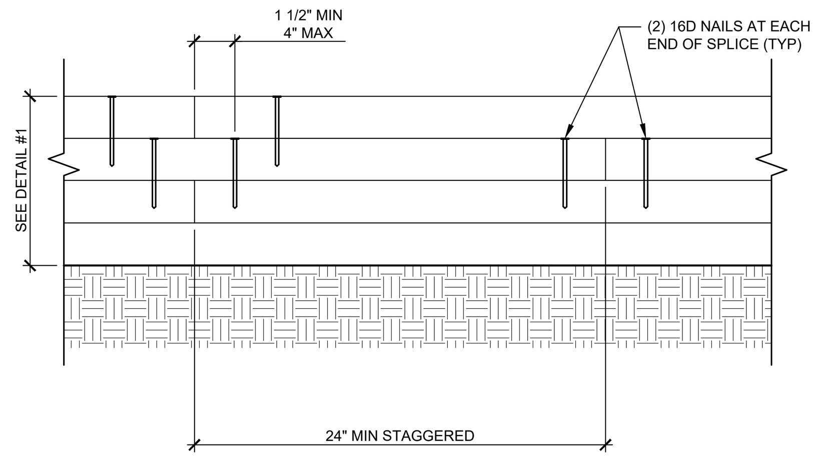


## TYPICAL SPLICE DETAIL
SCALE: 3" = 1'-0"

12

NOTE:
SKIRTING OR VENT SCREEN NOT SHOWN FOR CLARITY

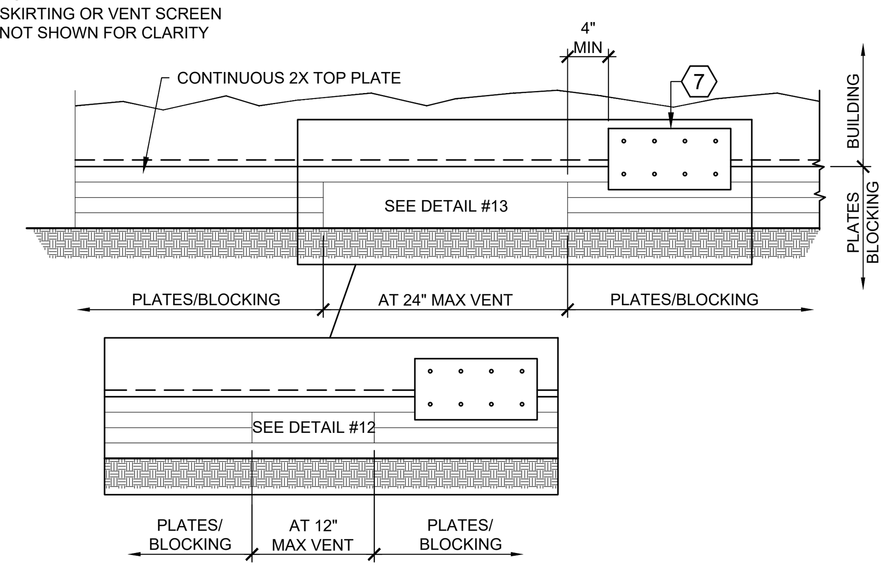


## VENTS AT LEVELED GRADE
SCALE: 1" = 1'-0"

9

NOTE:
SEE DETAIL #6 FOR MIN FOUNDATION HEIGHT AT SLOPED GRADE

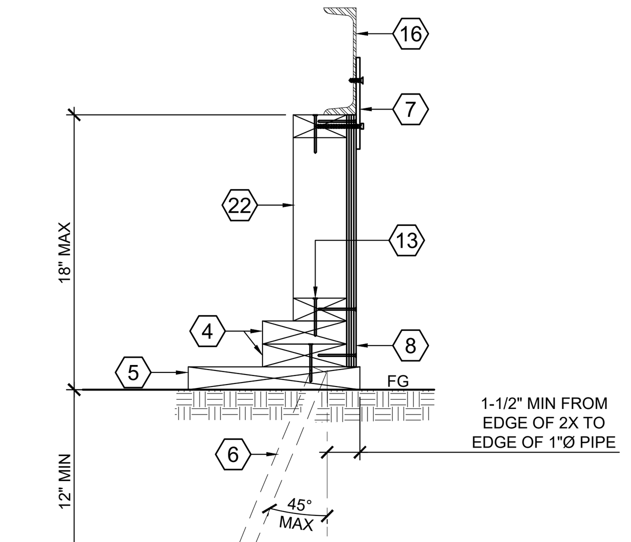


## OPT CRIPPLE WALL PERIMETER DETAIL
SCALE: 3" = 1'-0"

5

NOTE:
SEE DETAIL #6 FOR MIN FOUNDATION HEIGHT AT SLOPED GRADE

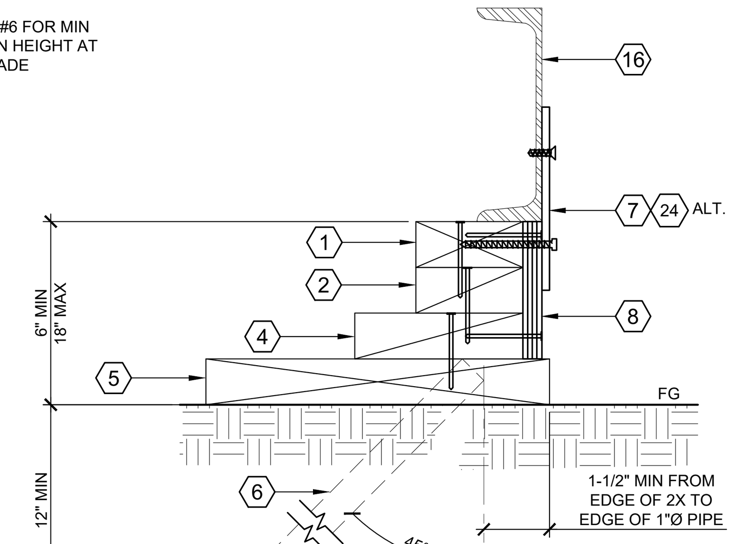


## TYPICAL PERIMETER DETAIL
SCALE: 3" = 1'-0"

1

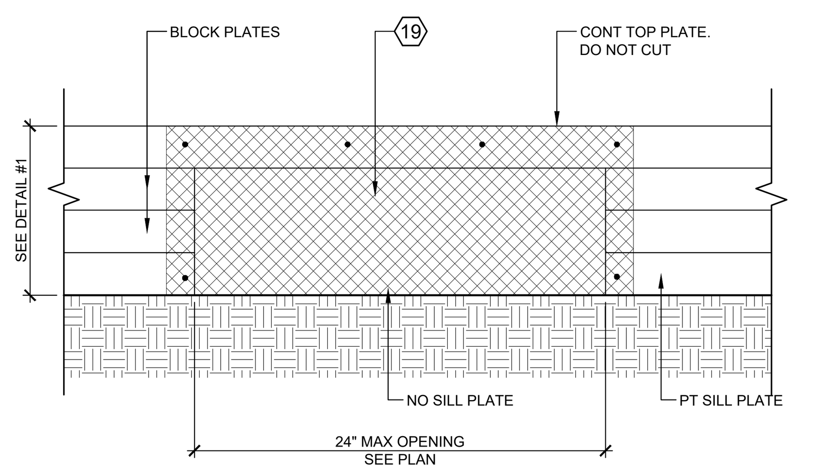


## 24" MAX VENT DETAIL
SCALE: 3" = 1'-0"

13

NOTE:
SEE DETAIL #6 FOR MIN FOUNDATION HEIGHT AT SLOPED GRADE

| (23) QUANTITY SCHEDULE | | | | | |
|---|---|---|---|---|---|
| FLOOR LOAD | | 50 | 50+15 | 100 | 125 |
| ALL MODLINES | S/S | (1) SHOT PIN PER PLATE | | | |
| | CONT | 17" OC | 17" OC | 17" OC | 10" OC |

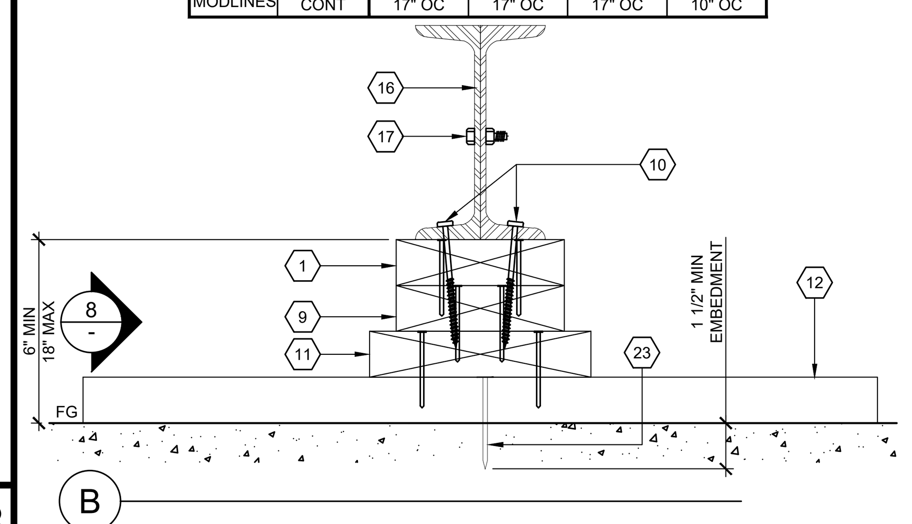


NOTE:
SEE DETAIL #1 FOR ADDITIONAL INFORMATION AND GENERAL NOTE #4

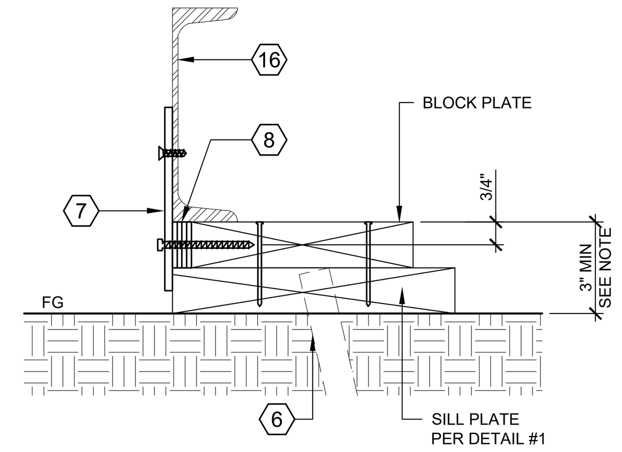


## MINIMUM HEIGHT AT SLOPED GRADE
SCALE: 3" = 1'-0"

6

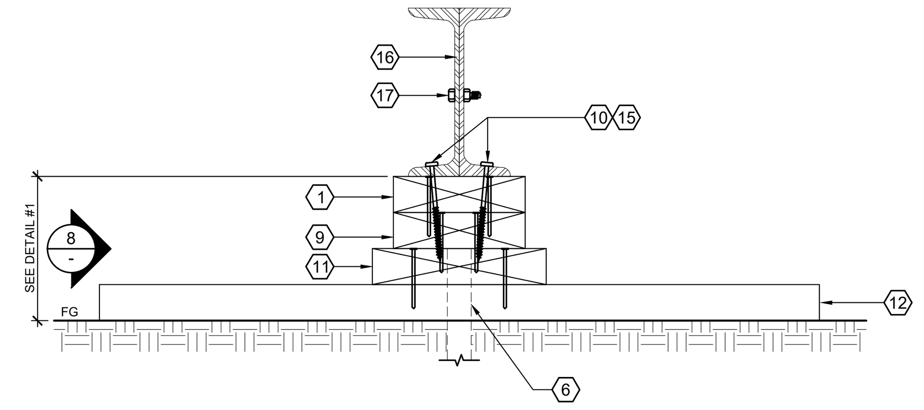


## TYPICAL MODLINE DETAIL
SCALE: 3" = 1'-0"

2

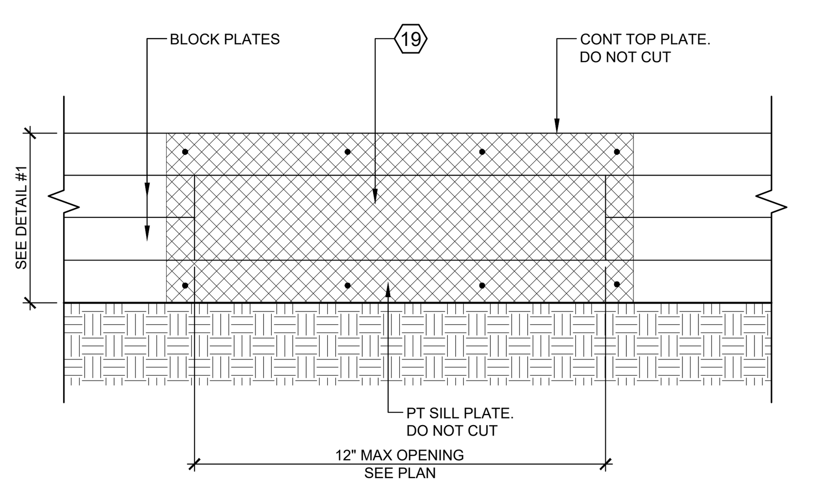


## 12" MAX VENT DETAIL
SCALE: 3" = 1'-0"

14

| (20) QUANTITY SCHEDULE | | | | | |
|---|---|---|---|---|---|
| FLOOR LOAD | | 50 | 50+15 | 100 | 125 |
| 24'x40' | ENDWALL | 10" OC | 10" OC | 10" OC | 6" OC |
| | SIDEWALL | 17" OC | 17" OC | 17" OC | 10" OC |
| 36'x40' | ENDWALL | 10" OC | 10" OC | 10" OC | 6" OC |
| | SIDEWALL | 11" OC | 11" OC | 11" OC | 7" OC |
| 48'x40' | ENDWALL | 10" OC | 10" OC | 10" OC | 6" OC |
| | SIDEWALL | 8" OC | 8" OC | 8" OC | 5" OC |

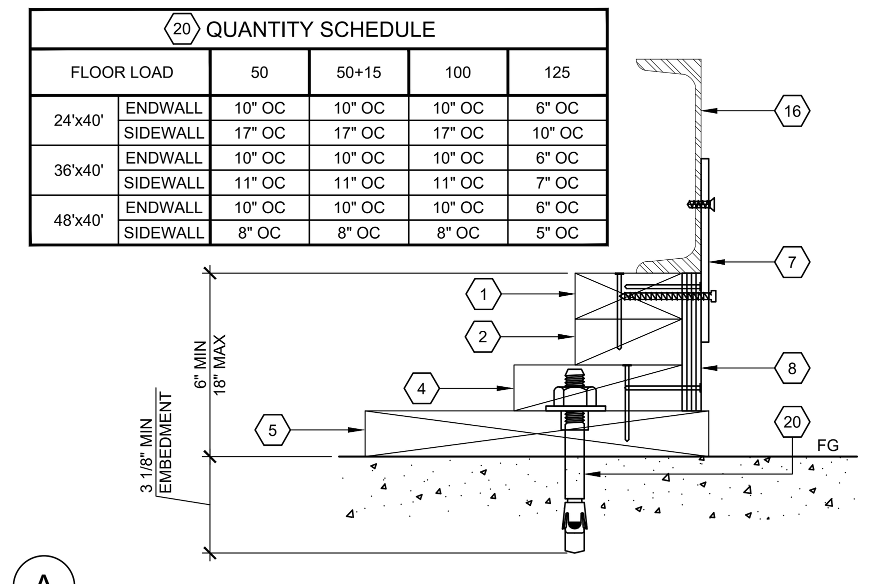


## (OPT) FOUNDATION TO CONC SLAB
SCALE: 3" = 1'-0"

10

NOTE:
SKIRTING OR VENT SCREEN NOT SHOWN FOR CLARITY

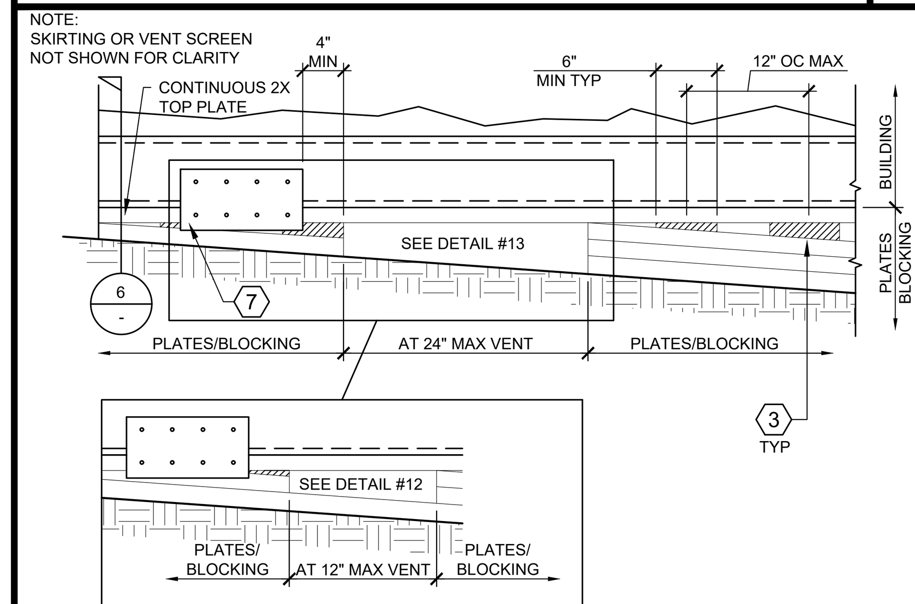


## VENTS/SHIMS AT SLOPED GRADE
SCALE: 3" = 1'-0"

7

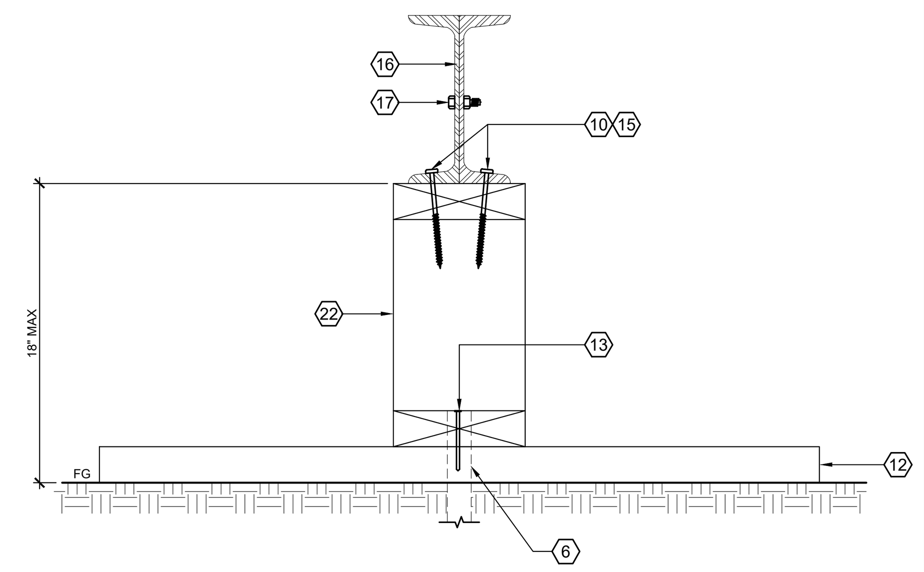


## OPT CRIPPLE WALL MODLINE DETAIL
SCALE: 3" = 1'-0"

3

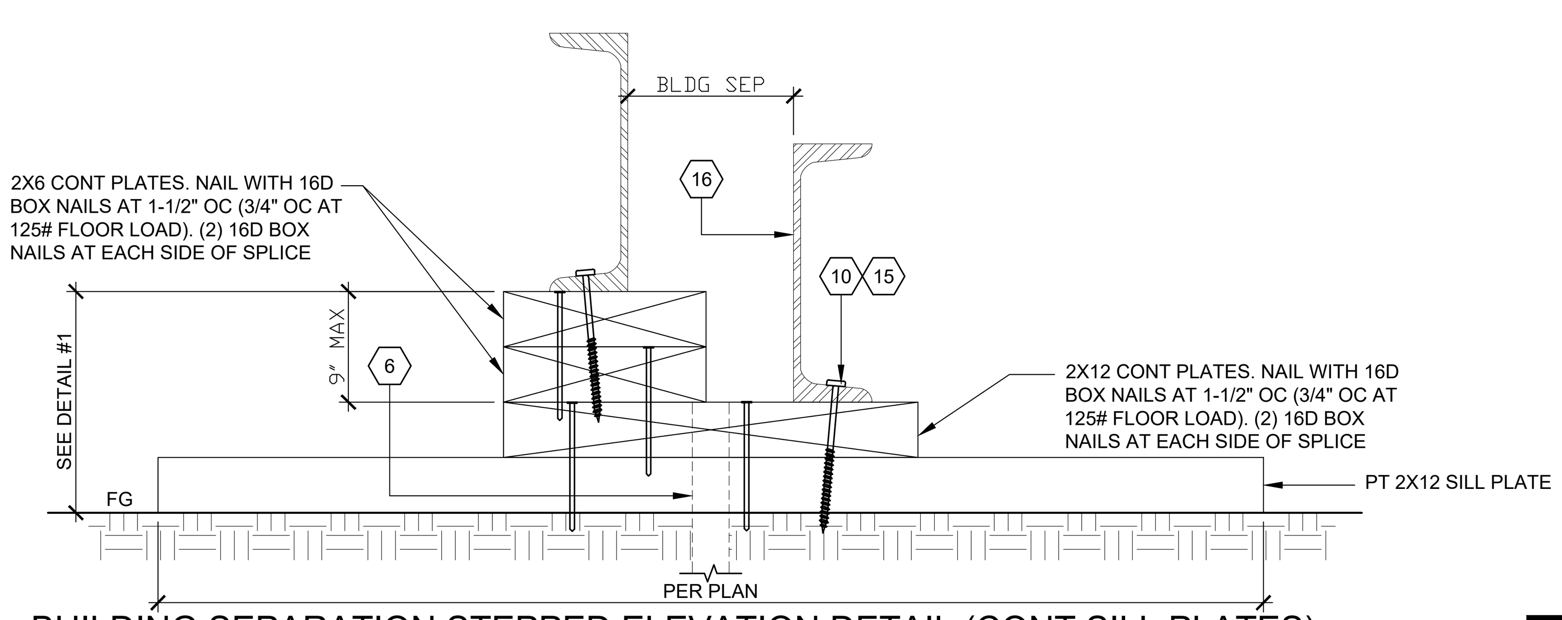


## BUILDING SEPARATION STEPPED ELEVATION DETAIL (CONT SILL PLATES)
SCALE: 3" = 1'-0"

11

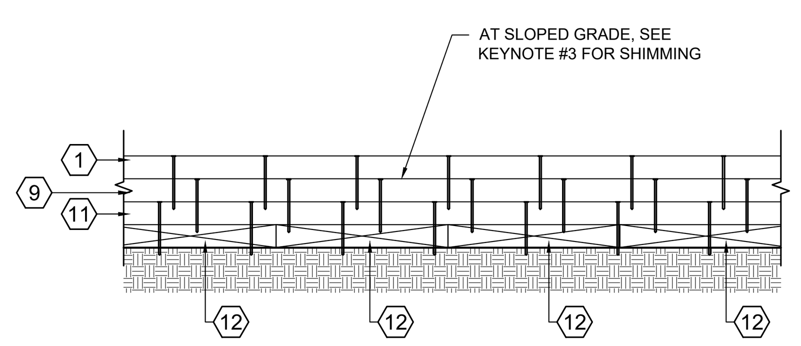


## MODLINE DETAIL (SIDE VIEW)
SCALE: 1-1/2" = 1'-0"

8

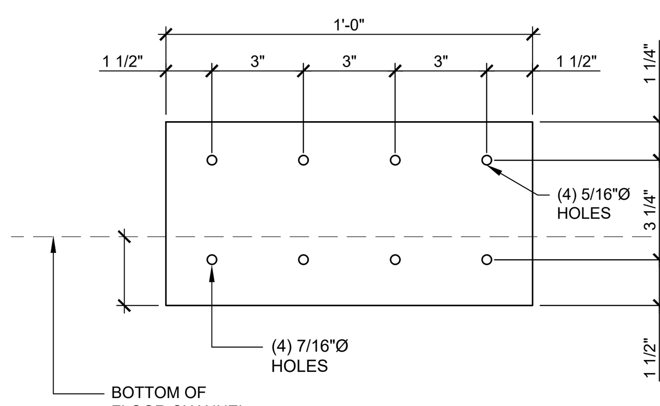


## TYPICAL FACE PLATE DETAIL
SCALE: 3" = 1'-0"

4

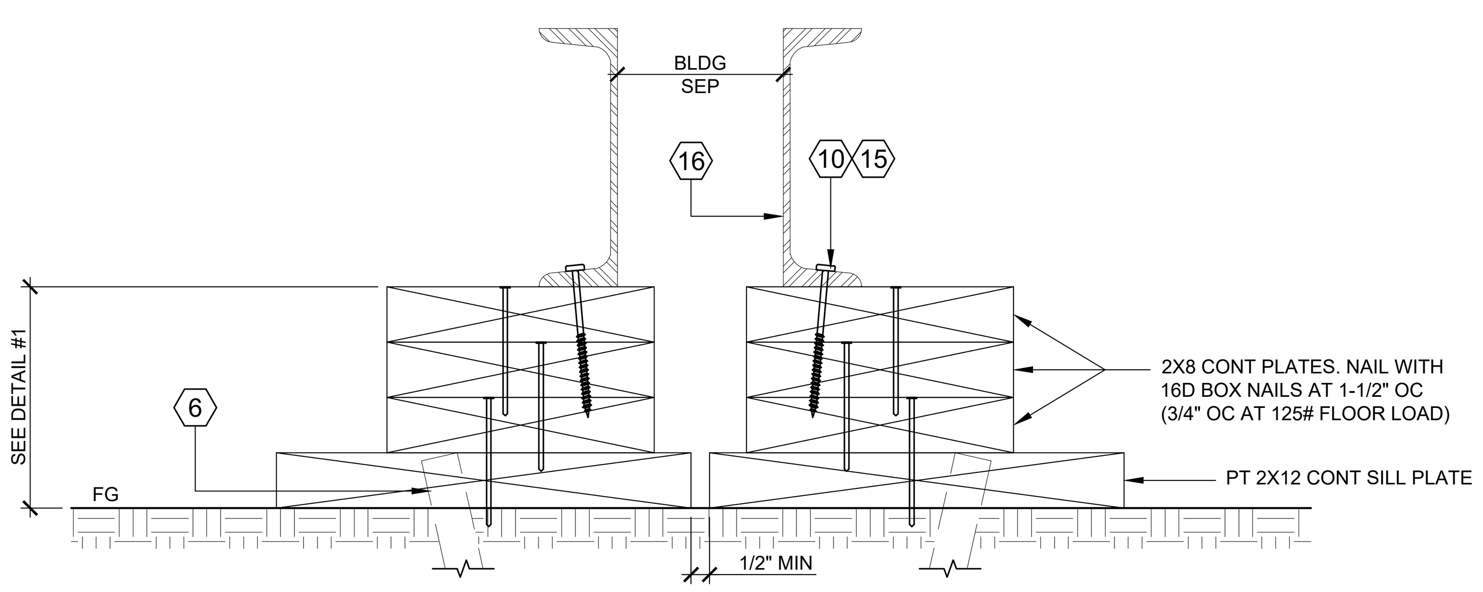


## BUILDING SEPARATION DETAIL (CONT SILL PLATES)
SCALE: 3" = 1'-0"

17

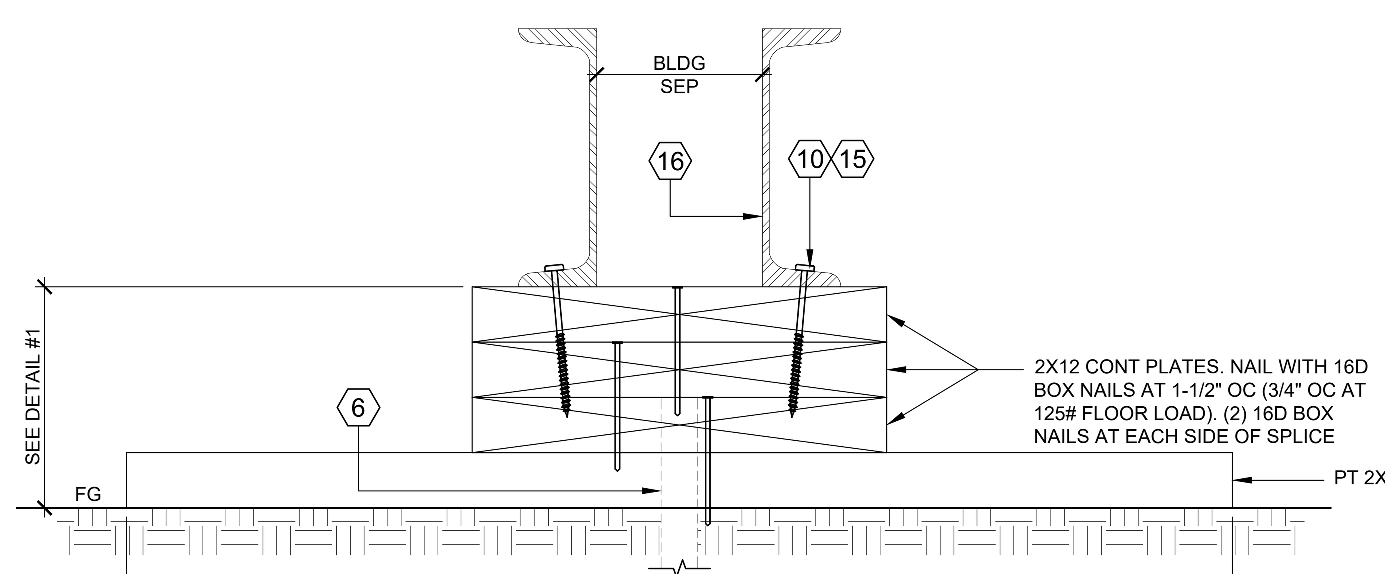


## ALTERNATE BUILDING SEPARATION DETAIL (SIDE BY SIDE SILL PLATES)
SCALE: 3" = 1'-0"

16

## KEY NOTES

1. CONTINUOUS TOP PLATE (SEE SCHEDULE ON PLAN). INSTALL NAIL TO EACH PAD WITH 16D BOX NAILS AT 1-1/2" OC STAGGERED & (2) 16D BOX NAILS AT EACH END OF SPLICE, MIN 1 1/2" PENETRATION
2. BLOCK OR CONT PLATES (SEE SCHEDULE ON PLAN) - 16D BOX NAILS AT 1-1/2" OC (3/4" OC AT 125# FLOOR LOAD ONLY). (2) 16d BOX NAILS AT EACH END OF SPLICE, MIN 1 1/2" PENETRATION
3. 1 1/2" MAX TAPERED SHIMS NAIL TO FOUNDATION PLATES WITH 8D BOX NAILS AT 12" OC NAIL STAGGERED ALONG EACH TAPERED SHIM (PER SLOPE OF GROUND AT SITE)
4. BLOCK PLATE (SEE SCHEDULE ON PLAN). SPLICES SHALL OCCUR AT CENTER OF BLOCK PLATE LOCATIONS (SEE GENERAL NOTE #3). REFER TO KEYNOTE #2 FOR NAILING
5. CONTINUOUS PRESSURE TREATED SILL PLATE (SEE PLAN). PLATE SPLICES SHALL OCCUR AT CENTER OF BLOCK PLATE LOCATION
6. 1"Ø x 14" MIN STANDARD WEIGHT HOT DIPPED GALVANIZED PIPE AT 10'-0" OC MAX, 2'-0" MAX FROM EACH CORNER IN BOTH DIRECTIONS AND A MINIMUM OF TWO PIPES PER DISCONTINUE FOUNDATION STRIP PER DSA IR 16-1.13 SECTION 4.8. DRILL SILL PLATE 1 1/2"Ø MAX HOLE PIPE SHOULD PENETRATE INTO SOIL AND/OR PAVING A MIN OF 12" MEASURED VERTICALLY PIPES SHALL BE INSTALLED ON A CONTINUOUS PLATE. PIPE SHALL BE STAMPED WITH ASTM A53 GRADE 'A' OR 'B' AND MEET THE REQUIREMENTS OF ASTM A123
7. TYPICAL TIE PLATE AT 12X40 BUILDING: 12" X 6" X 10 GA STEEL TIE PLATE (PRIME AND PAINTED) WITH (4) 1/4"X1-1/4" LONG SDS INTO CHANNEL & (4) 3/8"X4-1/2" LAG SCREW INTO 2X MEMBER TYP LOCATE 4" MIN FROM SPLICES & END OF FOUNDATION PLATES. IF STEEL TIE PLATE IS NOT PRIMED OR PAINTED IT SHALL BE GALV. IF FASTENERS ARE NOT PAINTED, IT SHALL BE GALV
8. 5/8" PLYWOOD PERIMETER SKIRTING. NAIL TO FOUNDATION PLATES WITH 8d BOX NAILS @ 12" OC TOP AND BOTTOM
9. MODLINE - CONT PLATE (SEE SCHEDULE ON PLAN) NAIL BLOCKS TOGETHER WITH (2) 16D BOX NAILS AT EACH END OF SPLICE, MIN 1 1/2" PENETRATION
10. 5/8"Ø X 4" LAG BOLT AT MODLINE (SEE LAG SCHEDULE FOR AMOUNT). LAG SCREW SHALL BE INSTALLED VERTICALLY OR AT A MAXIMUM 45 DEGREES
11. MODLINE - CONT PLATE (SEE SCHEDULE ON PLAN). NAIL (2) 16d @ 3" OC AND (2) 16D NAILS AT EACH END
12. MODLINE - SIDE BY SIDE PRESSURE TREATED SILL PADS (SEE SCHEDULE ON PLAN)
13. CRIPPLE WALL SILL PLATE TO PLATE NAIL WITH 16D AT 6" OC MAX (3" OC AT 125# FLOOR LOAD ONLY)
14. NOT USED
15. 11/16"Ø HOLE IN FLOOR CHANNEL FOR 5/8"Ø x 4" LAG SCREW (SEE LAG SCHEDULE FOR AMOUNT)
16. FLOOR CHANNEL (SEE STRUCTURAL FLOOR FRAMING SHEET)
17. MACHINE BOLT (SEE STRUCTURAL BUILDING SECTION SHEET FOR SPACING)
18. FLOOR JOIST OR BLOCK
19. VENT SCREEN ATTACHED TO FOUNDATION W/ #8 SCREWS AT EACH CORNERS. COORDINATE WITH FOUNDATION PLAN TABLE FOR MAX SPACE BETWEEN FOUNDATION BLOCKS & BUILDING VENTILATION TABLE FOR VENTING REQUIREMENTS TO DETERMINE SIZE OF NET OPENING. VENTING SCREEN SHALL BE 2" LARGER THAN THE SIZE OF THE NET OPENING FOR THE SCREEN TO BE FASTENED ON EACH CORNER. VENTILATION SHALL BE PROVIDED AT A NET AREA OF NOT LESS THAN 1 SQUARE FOOT FOR EACH 150 SQUARE FEET OF UNDER FLOOR AREA
20. 5/8"Ø 'HILTI' KBTZ ANCHOR BOLT PER ICC REPORT #ESR-1917 (SEE SCHEDULE FOR QUANTITY), NOTCH BLOCK PLATE ABOVE AS NECESSARY
21. 2x6 HF #2 AT 16" OC MAX. (2) 16D NAILS TOE OR END NAILS TYP AT TOP & BTM STUDS
22. 2x4 HF #2 AT 16" OC MAX. (2) 16D BOX NAILS TOE OR END NAILS TYP AT TOP & BTM STUDS
23. 0.145"Ø X 3" LONG X-CP 72 P8 S36 'HILTI' SHOT PIN PER ICC REPORT #ESR-2379 (SEE SCHEDULE FOR QUANTITY, STAGGER SPACING)
24. ALTERNATE TIE PLATE AT 12X40 BUILDING: 12" X 6" X 3 GA STEEL TIE PLATE (PRIME AND PAINTED) WITH (4) 1/4"X1-1/4" LONG SDS INTO CHANNEL & (4) 7/16"X4-1/2" LAG SCREW INTO 2X MEMBER TYP LOCATE 4" MIN FROM SPLICES & END OF FOUNDATION PLATES. IF STEEL TIE PLATE IS NOT PRIMED OR PAINTED IT SHALL BE GALV. IF FASTENERS ARE NOT PAINTED, IT SHALL BE GALV

## GENERAL NOTES:

1. CONTINUOUS PLATES, OTHER THAN TOP OR BOTTOM PLATE, CAN BE CUT AS NECESSARY FOR VENTING PURPOSES
2. SEE INDIVIDUAL FOUNDATION SHEETS FOR ALL PLATE, BLOCKS AND SILL PLATE SIZES AS REQUIRED FOR FLOOR LIVE LOAD DESIGN
3. BLOCKS ABOVE SILL PLATES ARE TO BE CENTERED
4. SITE GRADE CONDITIONS VARY PER PROJECT SPECIFIC. DETAIL #6/- SHALL ONLY APPLY AT MAX TWO BUILDING CORNERS (WHEN NECESSARY) TO ALLOW VENTILATION AT OTHER SIDES OF THE FOUNDATION. IF APPLICABLE VERIFY PROPER VENTILATION REQUIREMENTS. IF MIN VENTILATION IS NOT MET, SITE GRADE CONDITION MUST BE RE-GRADED (BY DISTRICT)
5. ALL NAILS SPECIFIED ON THESE PLANS ARE BOX NAILS. COMMON NAILS IS OPTIONAL. WHEN SECURING FOUNDATION PLATE TO PLATE, THE MIN NAIL SHANK DIAMETER TO BE USED IS 0.131

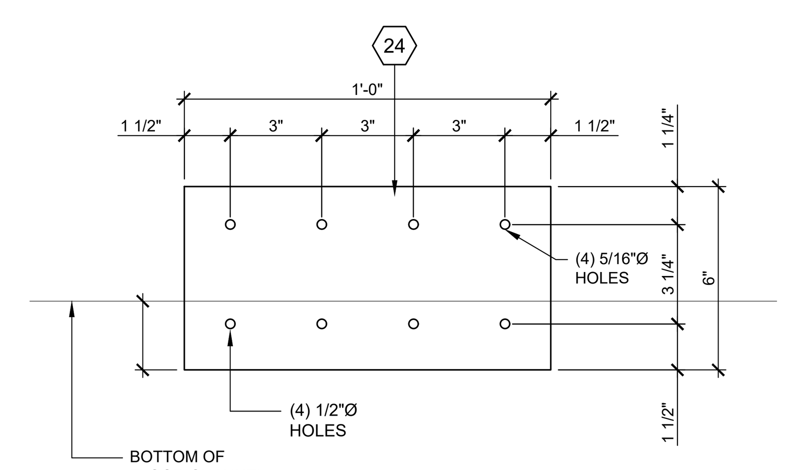


## ALTERNATE FOUNDATION TIE PLATES
SCALE: 3" = 1'-0"

18

STATE AGENCY APPROVAL


SKC COMPANY
15345 FAIRFIELD RANCH ROAD, SUITE #160, CHINO, CA 91709
OFFICE: (909) 740-3120, FAX: (909) 726-9470
WEBSITE: WWW.SKCCOMPANY.COM
MANUFACTURER #MF1279666 GC LIC # 992118
DEALER # DL1279666 SBE CERTIFIED



ALL DESIGNS INDICATED ON THESE PLANS/DRAWINGS ARE PROPERTY OF SKC, INC AND ARE FOR THE USE BY SKC IN THE SPECIFIED JOB ONLY. THEY SHALL NOT BE USED AND/OR DUPLICATED OR TRANSMITTED IN ANY FORM, FOR ANY PURPOSE WITHOUT THE PRIOR WRITTEN CONSENT OF SKC, INC. ANY UNAUTHORIZED USE OF THESE PLANS SHALL SUBJECT THE OWNER OF SAID PROPERTY TO LIQUIDATED DAMAGES OF $75,000.00. THESE PLANS ARE PROTECTED UNDER THE PROVISIONS OF THE 1976 COPYRIGHT ACT COPYRIGHT SKC, © ALL RIGHTS RESERVED.


DISTRICT/CUSTOMER NAME:

SCHOOL/SITE NAME:

SHEET TITLE:

WOOD PAD
FOUNDATION DETAILS

PRE-CHECK (PC) DOCUMENT
CODE: 2022 CBC
A SEPARATE PROJECT APPLICATION FOR CONSTRUCTION IS REQUIRED

APPROVED
DIV. OF THE STATE ARCHITECT
APP: 04-122454 PC
REVIEWED FOR
SS ☑ FLS ☑ ACS ☑ CG ☑
DATE: 11/14/2023

PROFESSIONAL OF RECORD ON PC


ORION
Structural Engineering, Inc.
11305 RANCHO BERNARDO RD SUITE 121
SAN DIEGO CA. 92127
PHONE (858) 679-1974
REGISTERED PROFESSIONAL ENGINEER RYAN J. OVER No. S 4437 EXP. 12/31/24 STRUCTURAL STATE OF CALIFORNIA

FIRM: Orion Structural Engineering, Inc.
ADDRESS: 11305 Rancho Bernardo Road Ste 121
CITY: San Diego, CA
PHONE: 858-679-1974


PROJECT SPECIFIC PROFESSIONAL OF RECORD

FIRM:
ADDRESS:
CITY:
PHONE:

REVISIONS

1 -
2 -
3 -
4 -
5 -

| | |
|---|---|
| PROJECT NO.: | 00-0000 |
| DRAFTER: | 00 |
| SCALE: | AS NOTED |
| DATE: | 00-00-00 |

SHEET NUMBER

# F1.8

10/31/2023 12:01:40 PM

# GENERAL NOTES

## GENERAL NOTES:

1. ALL CONSTRUCTION SHALL COMPLY WITH THE 2022 EDITION OF THE CALIFORNIA BUILDING CODE, CCR TITLE 24, PART 2 (CBC) AND CCR TITLE 24, PART 1, CHAPTER 4, GROUP 1, LATEST REVISIONS.
2. THE CONTRACTOR SHALL BE RESPONSIBLE FOR THE SAFETY OF THE BUILDING DURING CONSTRUCTION AND SHALL PROVIDE ADEQUATE SHORING AND BRACING DURING CONSTRUCTION. CONTRACTOR SHALL COMPLY WITH APPLICABLE SAFETY REGULATIONS
3. DETAILS NOT SPECIFICALLY SHOWN SHALL BE CALLED TO THE ATTENTION OF THE MANUFACTURER OR DESIGN PROFESSIONAL AND DSA.
4. THE CONTRACTOR SHALL COORDINATE THE WORK OF ALL TRADES AND SHALL CHECK ALL DIMENSIONS. ANY DISCREPANCIES SHALL BE CALLED TO THE ATTENTION OF THE OWNER AND BE RESOLVED BEFORE PROCEEDING WITH THE WORK.
5. NO STRUCTURAL MEMBERS SHALL BE CUT, NOTCHED OR OTHERWISE PENETRATED UNLESS SPECIFICALLY APPROVED BY THE STRUCTURAL ENGINEER IN ADVANCE OR SHOWN ON THESE DRAWINGS
6. TYPICAL DETAILS SHALL APPLY UNLESS SHOWN OTHERWISE ON THE DRAWINGS.
7. WHERE THESE GENERAL NOTES AND TYPICAL DETAILS ARE IN CONFLICT WITH THE CUSTOMER SPECIFICATIONS, THESE GENERAL NOTES AND TYPICAL DETAILS SHALL GOVERN.
8. PROVIDE OPENINGS, CURBS, FRAMING AND/OR SUPPORTS FOR ITEMS INDICATED ON ARCHITECTURAL, MECHANICAL, ELECTRICAL OR OTHER DRAWINGS INCLUDED IN CONSTRUCTION DOCUMENTS
9. REFER TO ARCHITECTURAL DRAWINGS FOR DIMENSIONS AND OTHER INFORMATION NOT SPECIFICALLY SHOWN ON STRUCTURAL DRAWINGS
10. ALL ELEVATIONS ARE REFERENCED FROM TOP OF FINISHED FIRST FLOOR ELEVATION = 0'-0"
11. PROVIDE INSPECTIONS, TESTS AND REPORTS IN ACCORDANCE WITH CCR TITLE 24, PART 2 AND CCR TITLE 24, PART 1, CHAPTER 4, GROUP 1.
12. IN ADDITION TO CONTINUOUS PROJECT INSPECTION, THE FOLLOWING SPECIAL INSPECTIONS SHALL BE REQUIRED, AS A MINIMUM:
    A. INSPECTION OF ALL WELDING FOR STRUCTURAL STEEL, PER TITLE 24, PART 2, SECTION 1705A.2.
    B. INSPECTION FOR CONCRETE AND CONCRETE REINFORCEMENT PLACEMENT, PER TITLE 24, PART 2, SECTION 1705A.3
13. ALL REQUIRED INSPECTIONS AND TESTS ARE THE RESPONSIBILITY OF THE OWNER. ALL INSPECTORS SHALL PROVIDE REPORTS AS REQUIRED BY TITLE 24, PART 1, CHAPTER 4, GROUP 1
14. DIMENSIONS AND ELEVATIONS SHOWN ARE APPROXIMATE AND ARE PROVIDED AS AN AID IN INTERPRETING THE DRAWINGS ONLY. DIMENSIONS AND ELEVATIONS MUST BE VERIFIED WITH ARCHITECTURAL DRAWINGS. IN THE EVENT OF CONFLICT, DIMENSIONS AND ELEVATIONS SHOWN ON ARCHITECTURAL DRAWINGS SHALL GOVERN. DRAWING SCALES GIVEN ARE APPROXIMATE - DO NOT SCALE PLANS OR DETAILS
15. WHEN MODULE IS RELOCATED - DO NOT REINSTALL NAILS OR SCREWS IN EXISTING HOLES

## WOOD:

1. STRUCTURAL FRAMING SHALL BE HEM FIR - LARCH GRADED IN ACCORDANCE WITH THE STANDARD GRADING RULES OF THE WESTERN WOOD PRODUCTS ASSOCIATION OR STANDARD GRADING RULES #17 OF THE WEST COAST LUMBER INSPECTION BUREAU, LATEST EDITIONS. GRADES SHALL BE AS FOLLOWS UNLESS NOTED OTHERWISE ON THE DRAWINGS. (HEM FIR SOUTH IS NOT ALLOWED.) EACH PIECE SHALL BE GRADE MARKED AND NO PIECE MAY FALL BELOW GRADES INDICATED. ALL FRAMING EXCEPT AS NOTED HEM FIR #2
2. PLYWOOD SHALL BE AS SHOWN ON THESE DRAWINGS WITH EXTERIOR GLUE IN ACCORDANCE WITH U.S. PRODUCT STANDARD PS 1-09. ALL PANELS SHALL BE MARKED WITH AN APA GRADE MARK WITH AN IDENTIFICATION INDEX AS SHOWN ON DRAWINGS. USE 4'x8' PANELS, MINIMUM, EXCEPT AT BOUNDARIES AND FRAMING CHANGES WHERE MINIMUM PANEL DIMENSION SHALL BE 24" AT ROOFS AND FLOORS AND 12" AT WALLS.
3. BOLTS FOR TIMBER CONNECTIONS SHALL CONFORM TO ANSI/ASME STANDARD AND 2018 EDITION OF THE NDS. BOLTS SHALL BE INSTALLED IN ACCORDANCE WITH THE REQUIREMENTS OF OF THE LATEST EDITION OF THE NATIONAL DESIGN SPECIFICATION FOR WOOD CONSTRUCTION BY THE NATIONAL FOREST PRODUCTS ASSOCIATION (NDS). BOLT HOLES SHALL BE 1/32 TO 1/16 INCH LARGER THAN BOLT DIAMETER. RE-TIGHTEN BOLTS BEFORE CLOSING IN WORK. BOLTS SHALL BE FULL BODY STEEL BOLTS WITH MINIMUM YIELD STRENGTH OF 45,000 PSI
4. LAG SCREWS SHALL BE STEEL AND CONFORM TO ANSI/ASME STANDARD AND THE REQUIREMENTS OF THE 2018 NATIONAL DESIGN SPECIFICATION FOR WOOD CONSTRUCTION (NDS). HOLES FOR LAG SCREW SHANKS SHALL BE BORED THE SAME DEPTH AND DIAMETER AS THE SHANK. THE REMAINING DEPTH OF PENETRATION OF THE SCREW SHALL BE BORED TO 70% OF THE SHANK DIAMETER. ONE QUARTER INCH (1/4") DIAMETER LAG SCREWS NEED NOT HAVE PRE-DRILLED HOLES IF IT CAN BE SHOWN THAT THE WOOD MEMBERS ARE NOT DAMAGED DURING INSTALLATION. PROVIDE FULL DIAMETER BODY LAG SCREWS WITH BENDING YIELD STRENGTHS PER THE 2018 NDS.
5. PROVIDE MALLEABLE IRON WASHERS OR EQUIVALENT CUT PLATE WASHERS (NOT LESS THAN A STANDARD CUT WASHER) UNDER NUTS AND BOLT OR LAG SCREW HEADS WHICH BEAR ON WOOD.
6. WOOD SCREWS SHALL CONFORM TO ANSI/ASME STANDARD AND THE REQUIREMENTS OF THE 2018 NATIONAL DESIGN SPECIFICATION FOR WOOD CONSTRUCTION BY THE NATIONAL FOREST PRODUCTS ASSOCIATION (NDS). GALVANIZED OR OTHER CORROSION RESISTANT COATING WHERE EXPOSED TO WEATHER OR USED IN FOUNDATIONS. SCREWS SHALL BE STEEL WITH CUT THREADS AND BENDING YIELD STRENGTHS NDS.
7. WOOD MEMBERS SHALL BE CUT OR NOTCHED ONLY AS SHOWN ON STRUCTURAL DRAWINGS.
8. WHEN REQUIRED NAILING TENDS TO SPLIT WOOD MEMBERS, NAIL HOLES SHALL BE PRE-BORED TO 3/4 OF THE NAIL DIAMETER.
9. STRUCTURAL NAILING SHALL BE WITH FULL HEAD COMMON NAILS PER ALL REQUIREMENTS OF THE 2018 NDS. NAILING NOT SPECIFICALLY INDICATED SHALL COMPLY WITH CCR TITLE 24, PART 2, TABLE 2304.10.2. ALL NAILS SHALL BE GALVANIZED OR OTHER CORROSION RESISTANT COATING WHERE EXPOSED TO WEATHER, IN FOUNDATIONS AND AS NOTED ON PLANS, PER THE REQUIREMENTS OF CCR TITLE 24, PART 2, WITH MINIMUM BENDING YIELDS PER THE 2018 NDS. (SEE NAIL EQUIVALENCE BELOW.)
10. NAIL EQUIVALENCE: (PROVIDE MINIMUM NAIL LENGTHS AS REQUIRED FOR SPECIFIED PENETRATION, TYP UNO) 6d EQUALS .113"Ø - PROVIDE 1.36" MIN POINT PENETRATION 8d EQUALS .131"Ø - PROVIDE *1.57" MIN POINT PENETRATION 10d EQUALS .148"Ø - PROVIDE *1.78" MIN POINT PENETRATION 16d EQUALS .162"Ø - PROVIDE *1.94" MIN POINT PENETRATION * 1 1/2" AT 2x MEMBERS
11. EXCEPT WHERE MORE STRINGENT CONSTRUCTION IS SHOWN ON THE DRAWINGS, WOOD CONSTRUCTION SHALL COMPLY WITH TITLE 24, PART 2, SECTION 2308, CONVENTIONAL LIGHT-FRAME CONSTRUCTION PROVISIONS, AS A MINIMUM
12. PRESSURE PRESERVATIVE TREATMENT SHALL BE PER SECTION 2303.1.9, CCR TITLE 24, PART 2. PROVIDE QUALITY MARK ON ALL TREATED FOUNDATION MEMBERS FROM AGENCY LISTED BY AN ACCREDITATION BODY THAT COMPLIES WITH THE REQUIREMENTS OF THE AMERICAN LUMBER STANDARDS TREATED WOOD PROGRAM. ALL FOUNDATION MEMBERS SHALL BE IDENTIFIED PER SECTION 2303.1.9.1. TREAT ALL CUT ENDS OF PRESSURE TREATED MEMBERS WITH AN APPROVED PRESERVATIVE. (WILLARD W/B COPPER GREEN 2% OR AN APPROVED EQUIVALENT). WHERE NOTED, MEMBERS BELOW THE SUB FLOOR THAT ARE NOT A PART OF THE FOUNDATION SHALL BE PRESSURE TREATED. A QUALITY CONTROL STAMP IS NOT REQUIRED FOR STRUCTURAL MEMBERS BELOW THE SUB FLOOR THAT ARE NOT PART OF THE FOUNDATION
13. MACHINE NAILING IS SUBJECT TO APPROVAL BY THE STRUCTURAL ENGINEER OR ARCHITECT AND THE DIVISION OF THE STATE ARCHITECT.
14. POWDER DRIVEN FASTENERS SHALL BE BY HILTI, INC, HILTI FASTENING SYSTEMS - OR EQUAL. INSTALL IN ACCORDANCE WITH DRAWINGS AND THE MANUFACTURER'S RECOMMENDATIONS AND ICC APPROVALS
15. FASTENERS FOR PRESSURE-PRESERVATIVE TREATED AND FIRE-RETARDANT TREATED WOOD SHALL COMPLY WITH SECTION 2304.10.6 OF CBC
16. NAILS AND SPIKES USED IN WET OR EXTERIOR LOCATIONS SHALL COMPLY WITH SECTION 2304.10.2.1 OF CBC

## CONCRETE:

1. CONCRETE SHALL DEVELOP A MINIMUM ULTIMATE COMPRESSIVE STRENGTH OF 3500 PSI AT 28 DAYS IN ACCORDANCE WITH ASTM C31 AND C39. TESTING SHALL BE IN ACCORDANCE WITH 2022 CBC (CCR TITLE 24, PART 2) SECTION 1905A.1.2 AND ACI 318-19 SECTION 5.6. SAMPLES FOR STRENGTH TESTS OF EACH CLASS OF CONCRETE PLACED EACH DAY SHALL BE TAKEN NOT LESS THAN ONCE A DAY, OR NOT LESS THAN ONCE FOR EACH 50 CUBIC YARDS (38.3 $m^3$) OF CONCRETE, OR NOT LESS THAN 2000 SQUARE FEET (186 $m^2$) OF SURFACE AREA FOR SLABS OR WALLS. ADDITIONAL SAMPLES FOR SEVEN-DAY COMPRESSIVE STRENGTH TESTS SHALL BE TAKEN FOR EACH CLASS OF CONCRETE AT THE BEGINNING OF THE CONCRETE WORK OR WHENEVER THE MIX OR AGGREGATE IS CHANGED.
2. CONCRETE THAT WILL BE EXPOSED TO FREEZING AND THAWING, DEICING CHEMICALS OR OTHER EXPOSURE CONDITIONS SHALL COMPLY WITH SECTION 1904A.1, ACI 318-19 SECTION 4.4 &4.5
3. ALL CONCRETE WORK SHALL CONFORM TO THE REQUIREMENTS OF THE 2022 CBC (CCR TITLE 24, PART 2) AND ACI STANDARD 318-19, 2022 EDITION, OF THE AMERICAN CONCRETE INSTITUTE, UNLESS SHOWN OR NOTED OTHERWISE ON THESE DRAWINGS.
4. AGGREGATE SHALL CONFORM TO ASTM C33 FOR NORMAL CONCRETE WEIGHT AND C330 FOR LIGHT WEIGHT CONCRETE AND 2022 CBC SECTION 1903A.
5. CEMENT SHALL BE ASTM C150, TYPE I OR TYPE II (UNO BY GEO-TECHNICAL REPORT)
6. REINFORCING STEEL SHALL BE DEFORMED CONFORMING TO ASTM A615 GRADE 40 UNLESS OTHERWISE NOTED.
7. WELDED WIRE FABRIC REINFORCEMENT SHALL CONFORM TO ASTM A185.
8. WELDING OF REINFORCING STEEL SHALL BE PERFORMED ONLY WHERE INDICATED ON THE DRAWINGS AND SHALL BE IN COMPLIANCE WITH ALL REQUIREMENTS OF THE 2022 CBC AND THE REINFORCING STEEL WELDING CODE, AWS D1.4, LATEST REVISION, OF THE AMERICAN WELDING SOCIETY. PROVIDE WELDING PROCEDURE AND MILL TEST REPORTS FOR ALL REINFORCEMENT TO BE WELDED. REINFORCING WITH C.E. ABOVE .75 SHALL NOT BE WELDED. ARCHITECT SHALL APPROVE WELDING PROCEDURE, WELDER QUALIFICATIONS AND MILL TEST REPORTS PRIOR TO EXECUTION OF WELDING. PROVIDE INSPECTION PER SECTION 1705A.3 AND TABLE 1705A.2.1, TITLE 24, PART 2. REINFORCING STEEL TO BE WELDED SHALL CONFORM TO ASTM A706.
9. COVERAGE FOR REINFORCING BARS SHALL BE IN ACCORDANCE WITH THE REQUIREMENTS OF THE 2022 CBC AND ACI STANDARD 318-19 UNLESS SHOWN OTHERWISE ON THE DRAWINGS.
10. LAP SPLICES FOR REINFORCING BARS SHALL BE 72 BAR DIAMETERS UNLESS SHOWN OTHERWISE ON THE DRAWINGS. WIRE BARS TOGETHER AT LAPS OR SPLICES. STAGGER LAPS IN ADJACENT HORIZONTAL OR SLOPING REINFORCING BARS A MINIMUM OF THE REQUIRED SPLICE LENGTH. HOOKS AND BENDS SHALL BE ACI 318-19 SECTION 25.3, 25.4 & 25.5 UNLESS SHOWN OTHERWISE. WELDED WIRE FABRIC SHALL BE SPLICED BY LAPPING A MINIMUM OF 12 INCHES OR TWO CROSS WIRES, WHICHEVER IS GREATER.
11. CONCRETE SHALL BE PLACED IN ACCORDANCE WITH ASTM C94 AND ACI STANDARD 304. ALSO COMPLY WITH REQUIREMENTS OF ACI 318-19 CHAPTER 19
12. ALL EMBEDDED ITEMS SHALL BE PLACED ACCURATELY AND SECURED PRIOR TO BEGINNING CONCRETE PLACEMENT.
13. CONSTRUCTION JOINTS SHALL BE LOCATED SO AS NOT TO IMPAIR THE STRENGTH OF THE STRUCTURE. CONSTRUCTION JOINTS SHALL COMPLY WITH ACI 318-19 CHAPTER 9. LOCATE CONSTRUCTION JOINTS AS SHOWN ON THE DRAWINGS OR APPROVED IN ADVANCE BY THE STRUCTURAL ENGINEER AND DSA.
14. PROVIDE SHOP DRAWINGS FOR ALL REINFORCING STEEL TO ARCHITECT FOR REVIEW AND APPROVAL PRIOR TO BEGINNING ANY FABRICATION.
15. CONTRACTOR SHALL PREPARE AND SUBMIT CONCRETE MIX DESIGNS TO THE ARCHITECT FOR APPROVAL PRIOR TO PLACEMENT OF ANY CONCRETE. CONCRETE MIX DESIGNS SHALL BE PER 2022 CBC SECTION 1905A.1 AND ACI 318-19 SECTION 19.2, A REGISTERED CIVIL ENGINEER WITH EXPERIENCE IN CONCRETE MIX DESIGN SHALL SELECT THE RELATIVE AMOUNTS OF INGREDIENTS TO BE USED AS BASIC PROPORTIONS OF THE CONCRETE MIXES PROPOSED FOR USE UNDER THIS PROVISION AND TESTING SHALL BE PERFORMED IN A LABORATORY ACCEPTABLE TO THE ENFORCEMENT AGENCY. ALL GROUT SHALL BE NONMETALLIC NON-SHRINK HIGH STRENGTH GROUT BY MASTER BUILDERS OR EQUIVALENT AS APPROVED BY THE ARCHITECT. UTILIZE PRODUCTS RECOMMENDED BY THE MANUFACTURER FOR EACH APPLICATION AND INSTALL PER MANUFACTURER'S RECOMMENDATIONS.
16. REINFORCING AND EMBEDMENT ITEMS SHALL BE FREE OF EXCESSIVE SCALE OR RUST, DIRT, GREASE, OIL OR ANY OTHER SUBSTANCE THAT WILL IMPAIR BOND WITH CONCRETE.
17. OWNER SHALL PROVIDE INSPECTIONS IN ACCORDANCE WITH CCR TITLE 24 FOR THE PLACEMENT OF CONCRETE AND CONCRETE REINFORCEMENT, FOR BOLTS INSTALLED IN CONCRETE AND FOR SAMPLING CONCRETE. OWNER'S INSPECTOR SHALL PROVIDE INSPECTION REPORTS TO THE ARCHITECT AND THE DIVISION OF THE STATE ARCHITECT.
18. ADDITIONALLY, PROVIDE TESTS AND INSPECTIONS IN ACCORDANCE WITH TITLE 24, PART 2, SECTION 1913A. A PLACING RECORD SHALL BE MAINTAINED FOR ALL CONCRETE PLACED IN THE STRUCTURE.
19. BATCH PLANT INSPECTION, CEMENT AND REINFORCING TESTS ARE NOT REQUIRED. FOR SINGLE-STORY LIGHT FRAMED BUILDINGS AND ISOLATED FOUNDATIONS SUPPORTING EQUIPMENT ONLY, WHERE THE SPECIFIED COMPRESSIVE STRENGTH Fc OF THE CONCRETE DELIVERED TO THE JOBSITE IS 3,500 PSI (24.13 MPa) AND WHERE THE Fc USED IN THE DESIGN IS NOT GREATER THAN 3,000 PSI (20.68 MPa). THE QUANTITIES OF CONCRETE MATERIALS SHALL BE CERTIFIED BY A LICENSED WEIGHMASTER AND THE QUALITY OF MATERIALS SHALL BE VERIFIED BY THE OWNER'S TESTING AGENCY:

A. QUALIFIED TECHNICIAN OF THE TESTING LABORATORY SHALL CHECK THE FIRST BATCH AT THE START OF THE DAY.
B. LICENSED WEIGHMASTER TO POSITIVELY IDENTIFY MATERIALS AS TO QUANTITY AND CERTIFY TO EACH LOAD BY A BATCH TICKET.
C. BATCH TICKETS, INCLUDING ACTUAL MATERIAL QUANTITIES AND WEIGHTS SHALL ACCOMPANY THE LOAD AND SHALL BE TRANSMITTED TO THE INSPECTOR OF RECORD BY A TRUCK DRIVER WITH LOAD IDENTIFIED THERON. THE LOAD SHALL NOT BE PLACED WITHOUT A BATCH TICKET IDENTIFYING THE MIX. THE INSPECTOR WILL KEEP A DAILY RECORD OF PLACEMENTS, IDENTIFYING EACH TRUCK, ITS LOAD, TIME OF RECEIPT AND APPROXIMATE LOCATION OF DEPOSIT IN THE STRUCTURE AND WILL TRANSMIT A COPY OF THE DAILY RECORD TO THE ENFORCEMENT AGENCY.
COMPLY WITH ALL REQUIREMENTS OF TITLE 24, PART 2, SECTIONS 1705A.3.3.

20. ALL CONCRETE WORK SHALL BE FORMED. CASTING OF FOUNDATION CONCRETE AGAINST SIDES OF FOOTING EXCAVATIONS SHALL NOT BE ALLOWED EXCEPT AS SPECIFICALLY APPROVED BY ARCHITECT, STRUCTURAL ENGINEER AND THE DIVISION OF THE STATE ARCHITECT.
21. MAX CONC SLUMP TO BE 4"±1"

## CONCRETE FOUNDATION:

1. FOUNDATION BEARING SHALL BE AS APPROVED BY THE DIVISION OF THE STATE ARCHITECT AND THE OWNER'S ARCHITECT. IT IS THE SCHOOL DISTRICT'S RESPONSIBILITY TO PROVIDE ADEQUATE BEARING TO DEVELOP THE ALLOWABLE BEARING PRESSURE NOTED BELOW.
2. CONCRETE FOUNDATIONS ARE DESIGNED FOR A MAXIMUM DEAD PLUS LIVE LOAD ALLOWABLE SOIL BEARING PRESSURE OF 1500 PSF PER CCR TITLE 24, TABLE 1806A.2.
3. THE BOTTOM OF ALL FOOTINGS SHALL BE LEVEL. CHANGES IN FOOTING ELEVATIONS SHALL BE MADE UTILIZING THE TYPICAL FOOTING STEP DETAILS ON THESE DRAWINGS.
4. CENTER FOOTINGS UNDER WALLS OR COLUMNS UNLESS OTHERWISE INDICATED ON THESE DRAWINGS.
5. PROVIDE PROPER GRADING OF SITE SUCH THAT WATER DOES NOT POND OR OTHERWISE COLLECT UNDER THE BUILDING.
6. FOUNDATIONS ARE DESIGNED AS PERMANENT FOUNDATIONS IN ACCORDANCE WITH TITLE 24, CHAPTER 18A.
   A. ALL BUILDINGS, PERMANENT OR OTHER RELOCATABLE, ADJACENT TO THESE RELOCATABLE BUILDINGS MUST BE SEPARATED FROM THESE RELOCATABLE BUILDINGS. SEE COVER SHEET FOR MINIMUM SEPARATION REQUIRED

## STRUCTURAL STEEL:

1. NOT USED
2. NOT USED
3. NOT USED
4. ALL WELDING SHALL BE IN ACCORDANCE WITH THE REQUIREMENTS OF THE CALIFORNIA BUILDING CODE (CBC) AND THE STRUCTURAL WELDING CODE - STEEL, AWS D1.1, 2018 EDITION OF THE AMERICAN WELDING SOCIETY. WELDING DONE BY SHIELDING ELECTRIC-ARC OR FLUX-CORED PROCESS COMPLYING WITH AWS.
5. FABRICATION AND ERECTION OF STRUCTURAL AND MISCELLANEOUS STEEL SHALL BE IN ACCORDANCE WITH THE REQUIREMENTS OF THE 15TH EDITION OF THE SPECIFICATION FOR STRUCTURAL STEEL BUILDINGS OF THE AMERICAN INSTITUTE OF STEEL CONSTRUCTION (AISC) (CBC CHAPTER 22A). ALSO COMPLY WITH REQUIREMENTS OF THE AISC CODE OF STANDARD PRACTICE FOR STEEL BUILDINGS AND BRIDGES. TEMPORARY BRACING IS REQUIRED AS NEEDED UNTIL ALL ELEMENTS SHOWN ON STRUCTURAL DRAWINGS ARE IN PLACE.
6. PRIME ALL STEEL SURFACES WITH AN APPROVED PRIMER, EXCEPT SURFACES TO BE EMBEDDED IN CONCRETE AND SURFACES TO RECEIVE FIELD WELDS. TOUCH-UP FIELD WELDS AND OTHER EXPOSED STEEL SURFACES AFTER ERECTION. ALTERNATE: PROVIDE GALVANIZED PER ASTM A-123.
7. PROVIDE TESTS AND INSPECTIONS IN ACCORDANCE WITH CCR TITLE 24, PART 2, SECTION 1705A.2. ALL STEEL SHALL BE PROPERLY IDENTIFIED PER SECTION 2203A.
8. WELDING SHOULD BE IN ACCORDANCE WITH CCR TITLE 24. PART 2, SECTION 1705A.2
9. ALL WELDS USED IN PRIMARY MEMBERS AND CONNECTIONS IN THE LATERAL FORCE-RESISTING SYSTEM SHALL BE MADE WITH A FILLER METAL THAT HAS A MINIMUM CHARPY V-NOTCH TOUGHNESS OF 20 ft-lbs AT 0 DEGREES F, AS REQ. BY SEC. 2212A.2.3
10. QUALIFIED AND CERTIFIED WELDERS SHALL BE USED FOR ALL WELDING. ALL WELDING TO CONFORM TO THE 2018 EDITION OF THE AMERICAN WELDING SOCIETY STRUCTURAL WEDLING CODE AWS D1.1
11. MATERIALS:

| | |
|---|---|
| ROLLED STRUCTURAL STEEL SHAPES | ASTM A992 |
| ANGLES, MISC STEEL | ASTM A36 |
| MISCELLANEOUS PLATES | ASTM A-572 GRADE 50 |
| STRUCTURAL STEEL PIPES | ASTM A53 TYPE E OR S, GRADE B |
| WELDING ELECTRODES | AWS STRUCTURAL STEEL E70XX, REINFORCING STEEL E90XX |
| ANCHOR BOLTS | ASTM F-1554 GRADE 36 |
| TYPICAL STEEL CONNECTION BOLTS | ASTM F-3125 GRADE A325 |
| MISCELLANEOUS BOLTS | ASTM A-307 |
| GALVANZING | ASTM A-123 |
| RUSH-INHIBITING PRIMER | TT-P-645 ASTM |
| HSS STEEL COLUMNS | ASTM A-500 GRADE B (Fy = 46 KSI) |

12. CONNECTED MEMBERS SHALL BEAR ONLY UPON UNTHREADED PORTIONS OF BOLTS
13. BURNING OF HOLES IS NOT ALLOWED
14. INSPECTION OF WELDING SHALL CONFORM TO CBC REQUIREMENTS (CHAPTER 17A)
15. THE STRUCTURAL STEEL FABRICATOR SHALL SUBMIT SHOP DRAWINGS TO THE ENGINEER FOR APPROVAL PRIOR TO FABRICATION
16. BOLT HOLES SHALL BE 1/16" LARGER IN DIAMETER THAN NOMINAL SIZE OF BOLTS USED, UNO

## PAD FOUNDATIONS: (RESTRAINED)

1. FOUNDATION BEARING SHALL BE AS APPROVED BY THE DIVISION OF THE STATE ARCHITECT, AND THE OWNER'S ARCHITECT. IT IS THE SCHOOL DISTRICT'S RESPONSIBILITY TO PROVIDE ADEQUATE BEARING TO DEVELOP THE ALLOWABLE BEARING PRESSURE NOTED BELOW
2. FOUNDATIONS ARE DESIGNED FOR A MAXIMUM DEAD PLUS LIVE LOAD ALLOWABLE SOIL BEARING PRESSURE OF 1000 PSF, AS PER IR 16-1
3. THE BOTTOM OF ALL FOOTINGS SHALL BE LEVEL. CHANGES IN FOOTING ELEVATIONS SHALL BE MADE UTILIZING THE FOOTING SHIM DETAILS ON THESE DRAWINGS
4. CENTER FOOTINGS UNDER WALLS OR COLUMNS UNLESS OTHERWISE INDICATED ON THESE DRAWINGS
5. PROVIDE PROPER GRADING OF SITE SUCH THAT WATER DOES NOT POND OR OTHERWISE COLLECT UNDER THE BUILDING.
6. VERIFY THAT NO PIPES, UTILITIES, OR OTHER SUCH ITEMS OCCUR BELOW FOOTINGS.
7. FOUNDATIONS ARE DESIGNED AS "RESTRAINED FOUNDATION", IN ACCORDANCE WITH IR 16-1.16, SUBSTANDARD FOUNDATIONS
   a. ANCHOR FOOTINGS AT BUILDING PERIMETER WITH 1"Ø HOT DIPPED GALVANIZED STANDARD WEIGHT STEEL PIPES DRIVEN FLUSH WITH TOP OF WOOD FOUNDATION PADS AND PENETRATING SOIL 12" MINIMUM AT A MAXIMUM SPACING OF 10'-0" OC AT SIDEWALLS AND 2'-0" FROM EACH CORNER IN BOTH DIRECTIONS
   b. STAIRS AND RAMPS SHALL BE PROPERLY ANCHORED TO BUILDING TO PREVENT SEPARATION
   c. ALL BUILDINGS, PERMANENT OR OTHER RELOCATABLE, ADJACENT TO THESE RELOCATABLE BUILDINGS MUST BE SEPARATED FROM THESE RELOCATABLE BUILDINGS BY 4 1/2" MINIMUM
8. FINISH GRADES SHALL BE WITHIN MAX 18" BELOW BOTTOM OF FLOOR JOISTS WITHOUT EXCEPTION
9. THE TIE PLATE WHICH ATTACHES THE FLOOR BEAM TO THE WOOD FOUNDATION AND THAT IS EXPOSED TO THE WEATHER IS TO BE GALVANIZED. TEK SCREWS THAT ATTACH THE TIE PLATE TO THE FLOOR BEAM ARE TO BE HOT-DIPPED GALVANIZED. ANCHOR BOLTS AND MECHANICAL EXPANSION ANCHORS WHICH ARE EXPOSED TO THE WEATHER ARE TO BE PAINTED WITH ZINC-BASED PAINT
10. UNDER-FLOOR CLEARANCE - UNDER FLOOR CLEARANCE AND THE TREATMENT OF WOOD MEMBERS (INCLUDING THE FLOOR SHEATHING) IN CLOSE PROXIMITY TO EXPOSED GROUND SHALL MEET THE REQUIREMENTS OF CBC SECTION 2304.12.1.1. IF A RAT SLAB IS PROVIDED WITHIN THE PERIMETER OF THE FOUNDATION OR THE BUILDING IS PLACED ON PAVEMENT, THE MINIMUM CLEARANCE REQUIREMENTS OF CBC SECTION 2304.12.1.1 FOR PROVIDING NATURALLY DURABLE OR PERSERVATIVE-TREATMENT WOOD NOT BE MET

## ACCEPTABLE FASTENERS / ICC REPORTS:

SHOT PIN THROUGH LIGHTWEIGHT CONCRETE: ICC REPORT #ESR-2269. ALTERNATE SHOT PIN #ESR-1752
SHOT PIN THROUGH LIGHT GAUGE STEEL: ICC REPORT #ESR-2961
WOOD/METAL JAMB STUDS TO STEEL COLUMN: ICC REPORT #ESR-2269

| | |
|---|---|
| SELF-TAPPING SCREWS | SECT 3.2.12 ASTM C1513 |
| SELF-DRILLING SCREWS | SECT 3.2.9 ASTM C1513 |
| SELF-PIERCING SCREWS | SECT 3.2.9 ASTM C1513 |

REFERENCE ASTM C1513, STANDARD SPECIFICATION FOR TAPPING SCREWS FOR COLD-FORMED STEEL FRAMING CONNECTION

REFERENCE AISI S400-20/ S1-09 , NORTH AMERICAN STANDARD FOR SEISMIC DESIGN

FASTENERS MANUFACTURED WITH CARBON STEEL WIRE SHALL CONFORM TO ASTM A510

TESTING - THE OPERATOR, TOOL, AND FASTENER SHALL BE PRE-QUALIFIED BY THE PROJECT INSPECTOR. HE SHALL OBSERVE THE TESTING OF THE FIRST 10 FASTENER INSTALLATIONS. A TEST "PULL-OUT" LOAD OF NOT LESS THAN TWICE THE DESIGN LOAD SHALL BE APPLIED TO THE PIN IN SUCH A MANNER AS NOT TO RESIST THE SPALLING TENDENCY OF THE CONCRETE SURROUNDING THE PIN. THEREAFTER, RANDOM TEST UNDER THE PROJECT INSPECTOR'S SUPERVISION SHALL BE MADE OF APPROXIMATELY 1 IN 10 PINS. IF ANY PIN FAILS TESTING, TEST ALL PINS OF THE SAME CATEGORY NOT PREVIOUSLY TESTED UNTIL TWENTY (20) CONSECUTIVE PASS, THEN RESUME THE INITIAL TESTING FREQUENCY.

## MACHINE APPLIED NAILING:

USE OF MACHINE NAILING IS SUBJECT TO A SATISFACTORY JOBSITE DEMONSTRATION FOR EACH PROJECT AND THE APPROVAL BY THE PROJECT ARCHITECT OR STRUCTURAL ENGINEER AND THE DIVISION OF THE STATE ARCHITECT. THE APPROVAL IS SUBJECT TO CONTINUED SATISFACTORY PERFORMANCE. MACHINE NAILING WILL NOT BE APPROVED IN 5/16" PLYWWOD. IF NAILHEADS PENETRATE THE OUTER PLY MORE THAN WOULD BE NORMAL FOR A HAND HAMMER OR IF MINIMUM ALLOWABLE EDGE DISTANCES ARE NOT MAINTAINED THE PERFORMANCE WILL BE DEEMED UNSATISFACTORY AND MACHINE NAILING SHALL BE DISCONTINUED.

## COLD FORMED STRUCTURAL STEEL:

1. ALL LIGHT GAUGE METAL FRAMING SHALL BE THE TYPE, SIZE AND GAUGE AS SHOWN ON THE PLANS AND BE FABRICATED AND ERECTED IN ACCORDANCE WITH LATEST ADOPTED AISI SPECIFICATIONS
2. ALL GALVANIZED STUDS, TRACKS, AND OR JOISTS 12, 14, AND 16 GAUGE SHALL CONFORM TO ASTM A653, SS GRADE 50 (Fy = 50 KSI) AND ASTM A653, SS GRADE 33 (Fy = 33 KSI) FOR 18 AND 20 GAUGE UNO
3. CORROSION PROTECT PER TABLE A4-1 BELOW
4. GALVANIZED COATINGS MUST MEET ASTM A-525 SPECIFICATIONS
5. CARBON SHEET STEEL MUST MEET THE MINIMUM REQUIREMENTS OF ASTM A-1011 GRADE 55 KSI FOR 10, 12, 14, AND 16 GAUGE AND GRADE 33 KSI FOR 18 GAUGE AND LIGHT MEMBERS UON. CARBON SHEET STEEL PRODUCTS MUST BE THOROUGHLY COATED WITH A RUST INHIBITIVE PAINT.
6. ALL STRUCTURAL MEMBERS SHALL BE DESIGNED IN ACCORDANCE WITH AMERICAN IRON AND STEEL INSTITUTE (AISI) NORTH AMERICAN SPECIFICATION FOR THE DESIGN OF COLD-FORMED STRUCTURAL STEEL MEMBERS LATEST ADOPTED EDITION (AISI S100-16).
7. METAL STUDS AND OR JOIST:
   A. FOR METAL STUD WALLS, UNLESS OTHERWISE SHOWN ON THE DRAWINGS, PROVIDE STAU NDARD PUNCHED STEEL MEMBERS OF THE GAUGES SHOWN ON THE DRAWINGS.
   B. USE ONLY ONE TYPE THROUGHOUT THE WORK, UNLESS OTHERWISE NOTED ON THE DRAWINGS OR SPECIFICALLY APPROVED IN ADVANCE BY THE ARCHITECT/ENGINEER
8. PROVIDE ALL ACCESSORIES INCLUDING, BUT NOT NECESSARILY LIMITED TO, TRACKS, CLIPS, WEB STIFFENERS, ANCHORS, FASTENING DEVICES, RESILIENT CLIPS AND OTHER ACCESSORIES REQUIRED FOR A COMPLETE AND PROPER INSTALLATION, AND AS RECOMMENDED BY THE MANUFACTURER FOR THE STEEL MEMBERS USED
9. FASTENINGS OF COMPONENTS SHALL BE WITH SELF-DRILLINGS SCREWS OR WELDING. SCREWS OR WELDS SHALL BE SUFFICIENT SIZE TO INSURE THE STRENGTH OF THE CONNECTION. ALL WELDS OF GALVANIZED STEEL SHALL BE TOUCHED UP WITH ZINC-RICH PAINT. ALL WELDS OF CARBON SHEET STEEL SHALL BE TOUCHED UP WITH PAINT
10. ALL METAL STUDS SHALL BE BY SSMA APPROVED SUPPLIED, ICC ERS-4205. ALTERNATE METAL STUDS MUST BE OF EQUAL OR GREATER SECTIONS PROPERTIES AND SHALL BE APPROVED BY THE ENGINEER
11. PROVIDE SHOP DRAWINGS INDICATING MEMBERS GAUGES, SHAPES, SIZES, SPACING, LOCATIONS AND CONNECTIONS
12. STUDS SHALL BE INSTALLED WITH THEIR BEARING ENDS POSITIONED FLUSH AGAINST THE INSIDE TRACK WEB.
13. FULL-HEIGHT DOUBLE STUDS SHALL BE PROVIDED AT THE ENDS OF PARTITIONS, AT ALL WALL OPENINGS, AND AT OTHER LOCATIONS SHOWN ON THE PLANS
14. BRIDGING SHALL BE COLD FORMED CHANNEL, MINIMUM 1-1/2" DEEP WITH 9/16" FLANGE SPACED AT 4'-0" ON CENTER MAXIMUM VERTICALLY. DOUBLE UP STUDS AT ALL DOOR JAMBS, WALL ENDS AND WALL CORNERS
15. SHEATHING SHALL BE ATTACHED TO BOTH FACES OF METAL STUDS THROUGHOUT THEIR LENGTH UNO
16. TRACK AT TOP AND BOTTOM OF STUD WALLS SHALL AT A MINIMUM MATCH THE STUD GRADE UNO
17. ALL SHEET METAL SCREWS SHALL BE THREAD FORMING OR THREAD CUTTING, WITH OR WITHOUT A SELF-DRILLING POINT PER AISI
18. ALL WELDING OR MATERIAL LESS THAN 0.18 INCHES IN THICKNESS SHALL BE MADE IN ACCORDANCE WITH THE AWS D1.3 WELDERS AND WELDING PROCEDURES AND SHALL BE QUALIFIED AS SPECIFIED IN AWS D1.3
19. TOUCH UP COLD GALVANIZING USING ZRC CHEMICAL PRODUCTS CO.M, ZRC COLD GALVANIZING COMPOUND OR EQUAL
20. SPLICES IN STUDS SHALL NOT BE PERMITTED

### CORROSION PROTECTION:

1. STRUCTURAL MEMBERS UTILIZED IN COLD-FORMED STEEL FRAMED CONSTRUCTION SHALL HAVE A PROTECTIVE COATING AS SPECIFIED IN TABLE A4-1

TABLE A4-1
COATING DESIGNATIONS

| COATING CLASSIFICATION | COATING DESIGNATOR | MINIMUM COATING REQUIREMENTS | | | |
|---|---|---|---|---|---|
| | | ZINC COATED[A] OZ/FT $^2$ (G/M $^2$) | ZINC IRON[B] OZ/FT $^2$ (G/M $^2$) | 55% AL-ZINC[C] OZ/FT $^2$ (G/M $^2$) | ZINCE-5%[D] OZ/FT $^2$ (G/M $^2$) |
| METALLIC COATED | CP 60 | G60 [Z180] | A60 [F180] | AZ50 [AZM1850] | CF30 [ZGF90] |
| | CP 90 | G90 [Z275] | NOT APPLICABLE | AZ50 [AZM1850] | CF45 [ZGF135] |
| PAINTED METALLIC | PM | THE METALLIC COATED SUBSTRATE SHALL MEET THE REQUIREMENTS OF METALLIC COATED. IN ADDITION, THE PAINT FILM SHALL HAVE A MINIMUM THICKNESS OF 0.5 MIL PER SIDE (PRIMER PLUS TOPCOAT) WITH A MINIMUM PRIMER THICKNESS OF 0.1 MIL PER SIDE | | | |

[A] ZINC-COATED STEEL SHEET AS DESCRIBED IN ASTM A653/A653M
[B] ZINC-IRON ALLOY-COATED STEEL SHEET AS DESCRIBED IN ASTM A653/A653M
[C] 55% ALUMINUM-ZINCE ALLOY COATED STEEL SHEET AS DESCRIBED IN ASTM A792/A792M
[D] ZINCE-5% ALUMINUM ALLOY-COAED STEEL SHEET AS DESCRIBED IN ASTM A875/A875M
[E] IN ACCORDANCE WITH THE REQUIREMENTS OF ASTM A1003/A1003M

2. ADDITIONAL CORROSION PROTECTION SHALL NOT BE REQUIRED ON EDGES OF METALLIC-COATED STEEL FRAMING MEMBERS, SHOP OR FIELD CUT, PUNCHED OR DRILLED
3. UNLESS ADDITIONAL CORROSION PROTECTION IS PROVIDED, FRAMING MEMBERS SHALL BE LOCATED WITHIN THE BUILDING ENVELOPE AND SHIELDED FROM DIRECT CONTACT WITH MOISTURE FROM THE GROUND OR THE OUTDOOR CLIMATE

STATE AGENCY APPROVAL

IDENTIFICATION STAMP
DIV. OF THE STATE ARCHITECT
APP. 04-124098 INC:
REVIEWED FOR
SS ☑ FLS ☑ ACS ☑
DATE: 11/14/24


KSC COMPANY
15345 FAIRFIELD RANCH ROAD, SUITE #160, CHINO, CA 91709
OFFICE: (909) 740-3120, FAX: (909) 726-9470
WEBSITE: WWW.SKCCOMPANY.COM
MANUFACTURER #MF1279666 DEALER # DL1279666
GC LIC # 992118 SBE CERTIFIED



ALL DESIGNS INDICATED ON THESE PLANS/DRAWINGS ARE PROPERTY OF SKC, INC AND ARE FOR THE USE BY SKC IN THE SPECIFIED JOB ONLY. THEY SHALL NOT BE USED AND/OR DUPLICATED OR TRANSMITTED IN ANY FORM, FOR ANY PURPOSE WITHOUT THE PRIOR WRITTEN CONSENT OF SKC, INC. ANY UNAUTHORIZED USE OF THESE PLANS SHALL SUBJECT THE OWNER OF SAID PROPERTY TO LIQUIDATED DAMAGES OF $75,000.00. THESE PLANS ARE PROTECTED UNDER THE PROVISIONS OF THE 1976 COPYRIGHT ACT COPYRIGHT SKC, © ALL RIGHTS RESERVED.


DISTRICT/CUSTOMER NAME: NEXTMOD

SCHOOL/SITE NAME: STOCKPILE

SHEET TITLE:

STRUCTURAL NOTES AND SPECIFICATIONS

PRE-CHECK (PC) DOCUMENT
CODE: 2022 CBC
A SEPARATE PROJECT APPLICATION FOR CONSTRUCTION IS REQUIRED

APPROVED
DIV. OF THE STATE ARCHITECT
APP: 04-122454 PC
REVIEWED FOR
SS ☑ FLS ☑ ACS ☑ CG ☑
DATE: 11/14/2023

PROFESSIONAL OF RECORD ON PC


ORION
Structural Engineering, Inc.
11305 RANCHO BERNARDO RD
SUITE 121
SAN DIEGO CA. 92127
PHONE (858) 679-1974

REGISTERED PROFESSIONAL ENGINEER
RYAN J. OVER
No. S 4437
EXP. 12/31/24
STRUCTURAL
STATE OF CALIFORNIA

FIRM: Orion Structural Engineering, Inc.
ADDRESS: 11305 Rancho Bernardo Road Ste 121
CITY: San Diego, CA
PHONE: 858-679-1974


PROJECT SPECIFIC PROFESSIONAL OF RECORD

FIRM:
ADDRESS:
CITY:
PHONE:

REVISIONS

1 -
2 -
3 -
4 -
5 -

| | |
|---|---|
| PROJECT NO.: | 00-0000 |
| DRAFTER: | 00 |
| SCALE: | AS NOTED |
| DATE: | 00-00-00 |

SHEET NUMBER

# S0.0a

10/31/2023 12:03:02 PM

# GENERAL NOTES

| STEEL STUD MANUFACTURERS ASSOCIATION (SSMA)<br>STEEL STUD FORMAT CONVERSION CHART | |
|---|---|
| ORDINARY FORMAT | SSMA FORMAT |
| C-3 5/8" X 1 1/2" X 20 GA (TRACK)<br>C-3 5/8" X 1 5/8" X 20 GA (STUD) | 362T150-33 (TRACK)<br>362S162-33 (STUD) |
| C-3 5/8" X 1 1/2" X 18 GA (TRACK)<br>C-3 5/8" X 1 5/8" X 18 GA (STUD) | 362T150-43 (TRACK)<br>362S162-43 (STUD) |
| C-3 5/8" X 1 1/2" X 16 GA (TRACK)<br>C-3 5/8" X 1 5/8" X 16 GA (STUD) | 362T150-54 (TRACK)<br>362S162-54 (STUD) |
| C-4" X 1 1/2" X 20 GA (TRACK)<br>C-4" X 1 5/8" X 20 GA (STUD) | 400T150-33 (TRACK)<br>400S162-33 (STUD) |
| C-4" X 1 1/2" X 18 GA (TRACK)<br>C-4" X 1 5/8" X 18 GA (STUD) | 400T150-43 (TRACK)<br>400S162-43 (STUD) |
| C-4" X 1 1/2" X 16 GA (TRACK)<br>C-4" X 1 5/8" X 16 GA (STUD) | 400T150-54 (TRACK)<br>400S162-54 (STUD) |
| C-5 1/2" X 1 1/2" X 20 GA (TRACK)<br>C-5 1/2" X 1 5/8" X 20 GA (STUD) | 550T150-33 (TRACK)<br>550S162-33 (STUD) |
| C-5 1/2" X 1 1/2" X 18 GA (TRACK)<br>C-5 1/2" X 1 5/8" X 18 GA (STUD) | 550T150-43 (TRACK)<br>550S162-43 (STUD) |
| C-5 1/2" X 1 1/2" X 16 GA (TRACK)<br>C-5 1/2" X 1 5/8" X 16 GA (STUD) | 550T150-54 (TRACK)<br>550S162-54 (STUD) |
| C-6" X 1 1/2" X 20 GA (TRACK)<br>C-6" X 1 5/8" X 20 GA (STUD) | 600T150-33 (TRACK)<br>600S162-33 (STUD) |
| C-6" X 1 1/2" X 18 GA (TRACK)<br>C-6" X 1 5/8" X 18 GA (STUD) | 600T150-43 (TRACK)<br>600S162-43 (STUD) |
| C-6" X 1 1/2" X 16 GA (TRACK)<br>C-6" X 1 5/8" X 16 GA (STUD) | 600T150-54 (TRACK)<br>600S162-54 (STUD) |
| C-8" X 1 1/2" X 20 GA (TRACK)<br>C-8" X 1 5/8" X 20 GA (STUD) | 800T150-33 (TRACK)<br>800S162-33 (STUD) |
| C-8" X 1 1/2" X 18 GA (TRACK)<br>C-8" X 1 5/8" X 18 GA (STUD) | 800T150-43 (TRACK)<br>800S162-43 (STUD) |
| C-8" X 1 1/2" X 16 GA (TRACK)<br>C-8" X 1 5/8" X 16 GA (STUD) | 800T150-54 (TRACK)<br>800S162-54 (STUD) |

| STEEL STUD MANUFACTURERS ASSOCIATION (SSMA)<br>MIL THICKNESS FORMAT CONVERSION CHART | | |
|---|---|---|
| GUAGE FORMAT | DESIGN THICKNESS | MILS |
| 25 | 0.0188 | 18 |
| 22 | 0.0283 | 27 |
| 20 | 0.0346 | 33 |
| 18 | 0.0451 | 43 |
| 16 | 0.0566 | 54 |
| 14 | 0.0713 | 68 |
| 12 | 0.1017 | 97 |
| 10 | 0.1242 | 118 |

| AMERICAN INSITUTE OF STEEL CONSTRUCTION (AISC)<br>HOT ROLLED MEMBER FORMAT CONVERSION CHART | |
|---|---|
| ORDINARY FORMAT | AISC FORMAT |
| C-6" X 8.2 LB | C 6x8.2 |
| C-7" X 9.8 LB | C 7x9.8 |
| C-10" X 15.3 LB | C 10x15.3 |
| L-1 1/2" X 1 1/2" X 3/16" | L 1-1/2x1-1/2x3/16 |
| L-2" X 2" X 3/16" | L 2x2x3/16 |
| L-3" X 3" X 3/8" | L 3x3x3/8 |
| L-5" X 3" X 3/8" | L 5x3x3/8 |

STATE AGENCY APPROVAL

IDENTIFICATION STAMP
DIV. OF THE STATE ARCHITECT
APP. 04-124098 INC:
REVIEWED FOR
SS ☑ FLS ☑ ACS ☑
DATE: 11/14/24


SKC COMPANY
15345 FAIRFIELD RANCH ROAD, SUITE #160, CHINO, CA 91709
OFFICE: (909) 740-3120, FAX: (909) 726-9470
WEBSITE: WWW.SKCCOMPANY.COM
MANUFACTURER #MF1279666 DEALER # DL 1279666
GC LIC # 992118 SBE CERTIFIED



ALL DESIGNS INDICATED ON THESE PLANS/DRAWINGS ARE PROPERTY OF SKC, INC AND ARE FOR THE USE BY SKC IN THE SPECIFIED JOB ONLY. THEY SHALL NOT BE USED AND/OR DUPLICATED OR TRANSMITTED IN ANY FORM, FOR ANY PURPOSE WITHOUT THE PRIOR WRITTEN CONSENT OF SKC, INC. ANY UNAUTHORIZED USE OF THESE PLANS SHALL SUBJECT THE OWNER OF SAID PROPERTY TO LIQUIDATED DAMAGES OF $75,000.00. THESE PLANS ARE PROTECTED UNDER THE PROVISIONS OF THE 1976 COPYRIGHT ACT COPYRIGHT SKC, © ALL RIGHTS RESERVED.


DISTRICT/CUSTOMER NAME:
NEXTMOD

SCHOOL/SITE NAME:
STOCKPILE

SHEET TITLE:

STRUCTURAL NOTES AND SPECIFICATIONS

PRE-CHECK (PC) DOCUMENT
CODE: 2022 CBC
A SEPARATE PROJECT APPLICATION FOR CONSTRUCTION IS REQUIRED

APPROVED
DIV. OF THE STATE ARCHITECT
APP: 04-122454 PC
REVIEWED FOR
SS ☑ FLS ☑ ACS ☑ CG ☑
DATE: 11/14/2023

PROFESSIONAL OF RECORD ON PC


ORION
Structural Engineering, Inc.
11305 RANCHO BERNARDO RD
SUITE 121
SAN DIEGO CA, 92127
PHONE (858)-679-1974

RYAN J. OWEN
S5200
EXP. 12/31/24
STRUCTURAL
STATE OF CALIFORNIA

FIRM: Orion Structural Engineering, Inc.
ADDRESS: 11305 Rancho Bernardo Road Ste 121
CITY: San Diego, CA
PHONE: 858-679-1974


PROJECT SPECIFIC PROFESSIONAL OF RECORD

FIRM:
ADDRESS:
CITY:
PHONE:

REVISIONS

1 -
2 -
3 -
4 -
5 -

| | |
|---|---|
| PROJECT NO.: | 00-0000 |
| DRAFTER: | 00 |
| SCALE: | AS NOTED |
| DATE: | 00-00-00 |

SHEET NUMBER

S0.0b

10/31/2023 12:03:17 PM

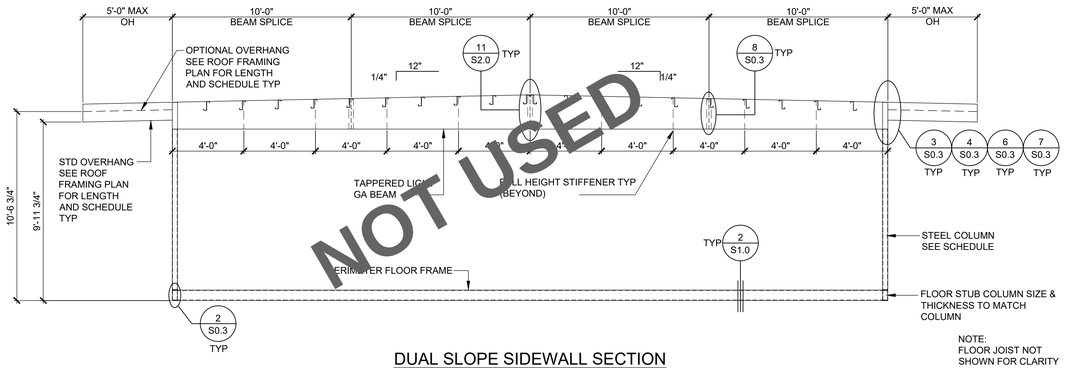


DUAL SLOPE SIDEWALL SECTION

NOTE: FLOOR JOIST NOT SHOWN FOR CLARITY

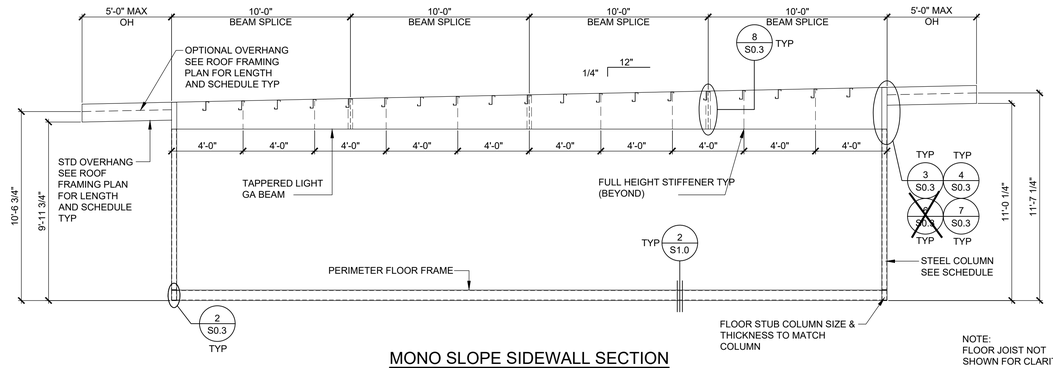


MONO SLOPE SIDEWALL SECTION

NOTE: FLOOR JOIST NOT SHOWN FOR CLARITY

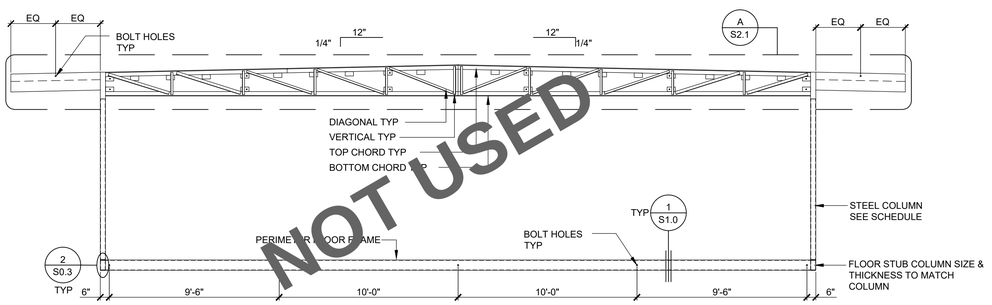


DUAL SLOPE ROOF MODLINE SECTION

NOTE: FLOOR AJOIST NOT SHOWN FOR CLARITY

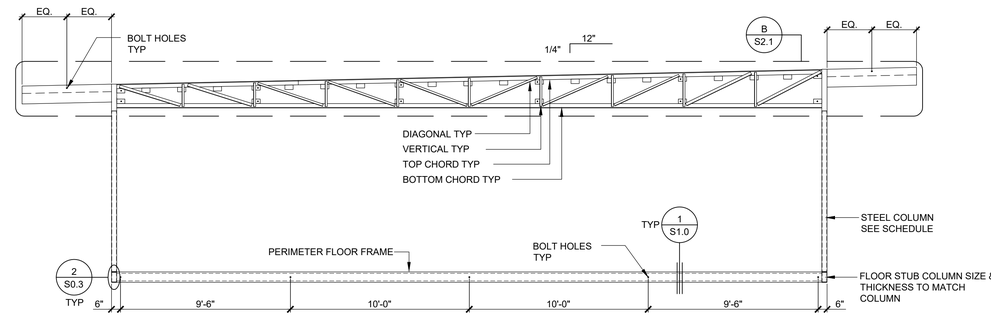


MONO SLOPE MODLINE SECTION

NOTE: FLOOR JOIST NOT SHOWN FOR CLARITY

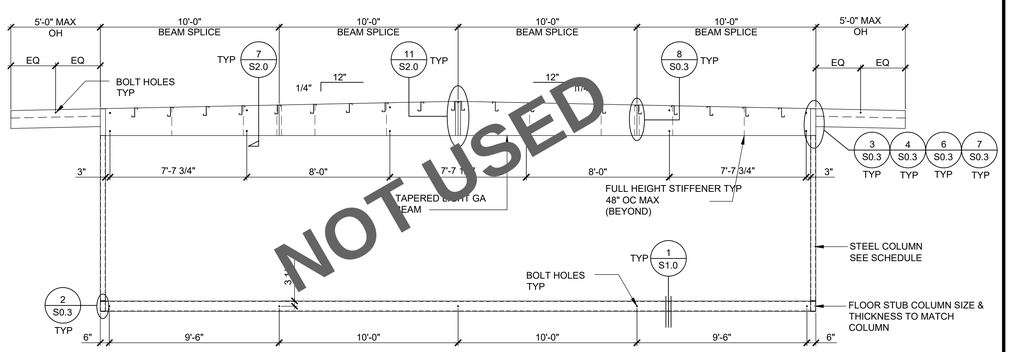


ALTERNATE DUAL SLOPE MODLINE SECTION

NOTE: FLOOR JOIST NOT SHOWN FOR CLARITY

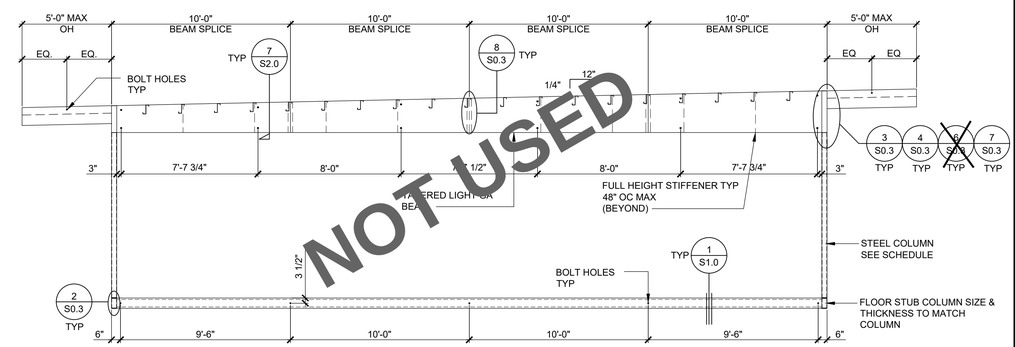


ALTERNATE MONO SLOPE INTERIOR ROOF SECTION

NOTE: FLOOR JOIST NOT SHOWN FOR CLARITY

STEEL COLUMNS

CORNER COLUMNS: 5"x5"x3/8"

MIDSPAN COLUMN @ SIDEWALL: N/A

REFERENCE: FRAME SECTION SHEETS

MISC: (NOTE: THE STEEL POST HEIGHT IS FROM TOP OF FLOOR BM TO BTM OF SIDEWALL BEAM/HEADER)

COLUMN SCHEDULE

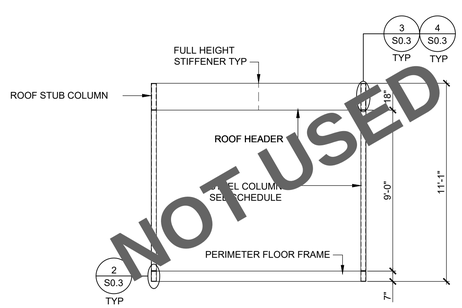


DUAL SLOPE ENDWALL SECTION

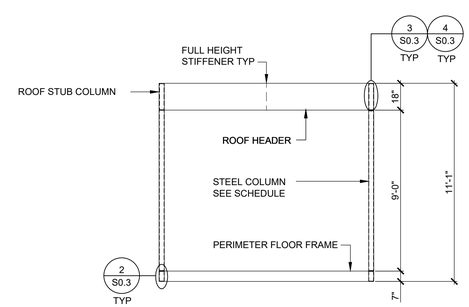


MONO SLOPE ENDWALL SECTION (LOW END)

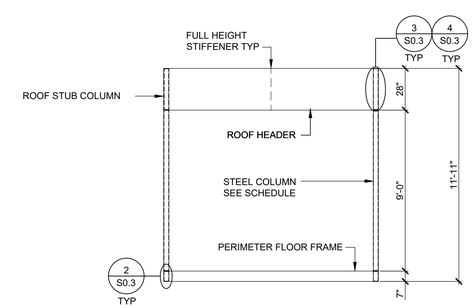


MONO SLOPE ENDWALL SECTION (HIGH END)

STATE AGENCY APPROVAL

IDENTIFICATION STAMP
DIV. OF THE STATE ARCHITECT
APP. 04-124098 INC:
REVIEWED FOR
SS ☑ FLS ☑ ACS ☑
DATE: 11/14/24


SKC COMPANY
15345 FAIRFIELD RANCH ROAD, SUITE #160, CHINO, CA 91709
OFFICE: (909) 740-3120, FAX: (909) 726-9470
WEBSITE: WWW.SKCCOMPANY.COM
MANUFACTURER #MF1279666 DEALER # DL 579666
GC LIC # 992118 SBE CERTIFIED



ALL DESIGNS INDICATED ON THESE PLANS/DRAWINGS ARE PROPERTY OF SKC, INC AND ARE FOR THE USE BY SKC IN THE SPECIFIED JOB ONLY. THEY SHALL NOT BE USED AND/OR DUPLICATED OR TRANSMITTED IN ANY FORM, FOR ANY PURPOSE WITHOUT THE PRIOR WRITTEN CONSENT OF SKC, INC. ANY UNAUTHORIZED USE OF THESE PLANS SHALL SUBJECT THE OWNER OF SAID PROPERTY TO LIQUIDATED DAMAGES OF $75,000.00. THESE PLANS ARE PROTECTED UNDER THE PROVISIONS OF THE 1976 COPYRIGHT ACT COPYRIGHT SKC, © ALL RIGHTS RESERVED.


DISTRICT/CUSTOMER NAME: NEXTMOD

SCHOOL/SITE NAME: STOCKPILE

SHEET TITLE:

STRUCUTRAL
BUILDING SECTIONS
PLYWOOD FLOOR

PRE-CHECK (PC) DOCUMENT
CODE: 2022 CBC
A SEPARATE PROJECT APPLICATION FOR CONSTRUCTION IS REQUIRED

APPROVED
DIV. OF THE STATE ARCHITECT
APP: 04-122454 PC
REVIEWED FOR
SS ☑ FLS ☑ ACS ☑ CG ☑
DATE: 11/14/2023

PROFESSIONAL OF RECORD ON PC


ORION
Structural Engineering, Inc.
11305 RANCHO BERNARDO RD
SUITE 121
SAN DIEGO CA, 92127
PHONE (858) 679-1974
RYAN J. OLSEN
EXP. 12/31/24
STRUCTURAL
STATE OF CALIFORNIA

FIRM: Orion Structural Engineering, Inc.
ADDRESS: 11305 Rancho Bernardo Road Ste 121
CITY: San Diego, CA
PHONE: 858-679-1974


PROJECT SPECIFIC PROFESSIONAL OF RECORD

FIRM:
ADDRESS:
CITY:
PHONE:

REVISIONS

1 -
2 -
3 -
4 -
5 -

| | |
|---|---|
| PROJECT NO.: | 00-0000 |
| DRAFTER: | 00 |
| SCALE: | AS NOTED |
| DATE: | 00-00-00 |

SHEET NUMBER

S0.1

10/31/2023 12:03:35 PM

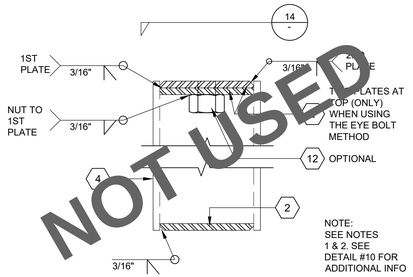


OPT ROOF STUB COLUMN PROFILE 16
SCALE: NTS

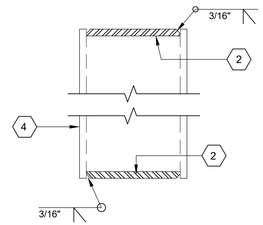


STD ROOF STUB COLUMN PROFILE 11
SCALE: NTS

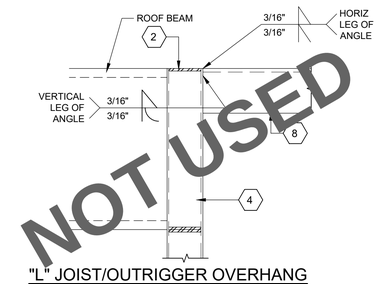


"L" JOIST/OUTRIGGER OVERHANG CONNECTION DETAIL 6
SCALE: NTS

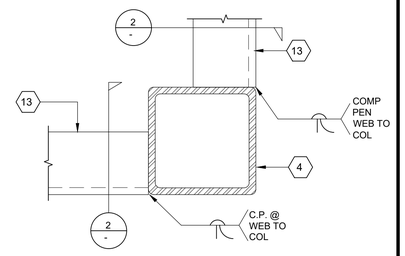


CORNER COLUMN AT FLOOR 1
SCALE: 6" = 1'-0"

17

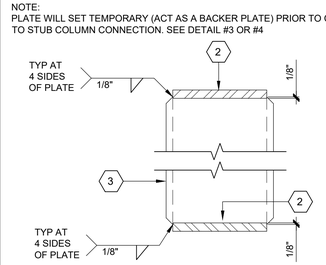


CORNER COLUMN PROFILE 12
SCALE: NTS

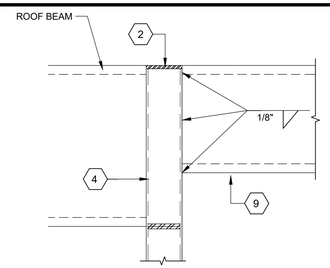


"C" CHANNEL OVERHANG CONNECTION DETAIL 7
SCALE: NTS

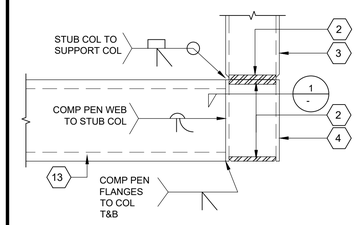


POST CONNECTION AT FLOOR 2
SCALE: 3" = 1'-0"

18

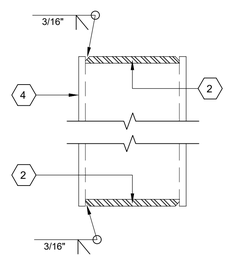


FLOOR STUB COLUMN PROFILE 13
SCALE: NTS

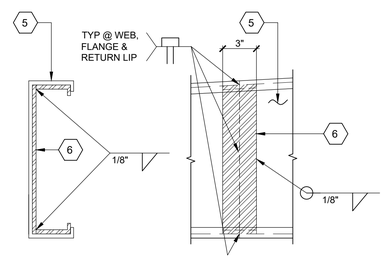


TYPICAL BEAM SPLICE 8
SCALE: NTS

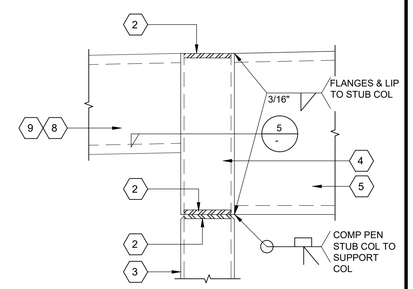


POST CONNECTION AT ROOF 3
SCALE: 1 1/2" = 1'-0"

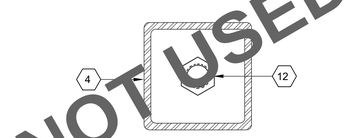


TOP VIEW AT ROOF STUB COLUMN 14
SCALE: NTS

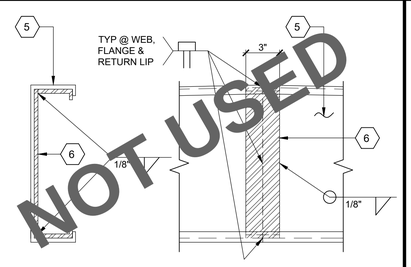


TYPICAL BEAM SPLICE (AT RIDGE) 9
SCALE: NTS

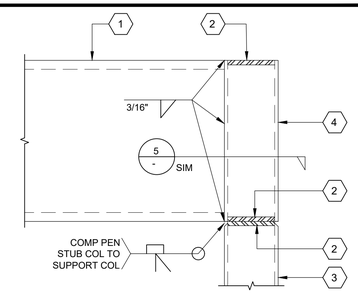


POST CONNECTION AT ROOF 4
SCALE: NTS

15

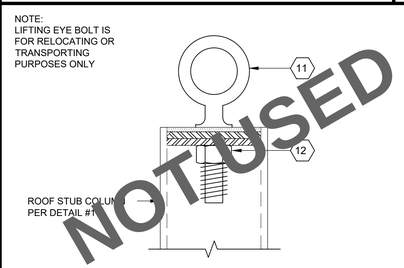


LIFTING EYE BOLT 10
SCALE: NTS

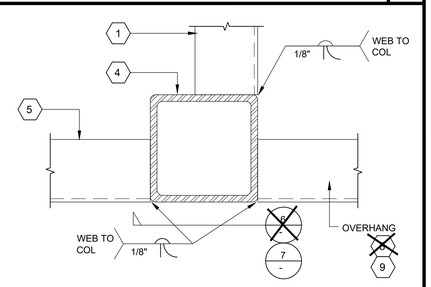


CORNER COLUMN AT ROOF 5
SCALE: NTS

## KEY NOTES

1. ROOF HEADER/BEAM (SEE STRUCTURAL ROOF FRAMING PLAN)
2. PLATE FITTED INSIDE COLUMN AND WELDED IN PLACE. THICKNESS OF PLATE TO MATCH THE THICKNESS OF THE COLUMN.
3. COLUMN (SEE DETAIL #12)
4. STUB COLUMN, SAME SIZE AND THICKNESS AS COLUMN SEE DETAIL #11 (FOR ROOF) AND DETAIL #13 (FLOOR)
5. TAPERED ROOF BEAM (SEE STRUCTURAL ROOF FRAMING PLAN)
6. 10 GA BACK-UP PLATE FOR BEAM SPLICE
7. NOT USED.
8. ~~OVERHANG ANGLE MEMBER (SEE DETAIL 8)~~
9. OVERHANG C-CHANNEL MEMBER (SEE DETAIL 7)
10. 1/4" FULL DEPTH STIFFENER INSIDE SPLICE LOCATIONS AT ROOF BEAM
11. 1"Ø LIFTING EYE BOLT
12. LIFTING EYE BOLT NUT
13. FLOOR BEAM (SEE STRUCTURAL FLOOR FRAMING PLAN)

## GENERAL NOTES

1. DRILL HOLES AT PLATES FOR THE LIFTING EYE BOLT SCREW
2. INSTALL LIFTING EYE BOLT NUT TO 1ST PLATES PRIOR TO INSTALLING THE PLATE INSIDE THE COLUMN

STATE AGENCY APPROVAL

IDENTIFICATION STAMP
DIV. OF THE STATE ARCHITECT
APP. 04-124098 INC:
REVIEWED FOR
SS ☑ FLS ☑ ACS ☑
DATE: 11/14/24


SKC COMPANY
15345 FAIRFIELD RANCH ROAD, SUITE #160, CHINO, CA 91709
OFFICE: (909) 740-3120, FAX: (909) 726-9470
WEBSITE: WWW.SKCCOMPANY.COM
MANUFACTURER #MF1279666 DEALER # DL1279666
GC LIC # 992118 SBE CERTIFIED



ALL DESIGNS INDICATED ON THESE PLANS/DRAWINGS ARE PROPERTY OF SKC, INC AND ARE FOR THE USE BY SKC IN THE SPECIFIED JOB ONLY. THEY SHALL NOT BE USED AND/OR DUPLICATED OR TRANSMITTED IN ANY FORM, FOR ANY PURPOSE WITHOUT THE PRIOR WRITTEN CONSENT OF SKC, INC. ANY UNAUTHORIZED USE OF THESE PLANS SHALL SUBJECT THE OWNER OF SAID PROPERTY TO LIQUIDATED DAMAGES OF $75,000.00. THESE PLANS ARE PROTECTED UNDER THE PROVISIONS OF THE 1976 COPYRIGHT ACT COPYRIGHT SKC, © ALL RIGHTS RESERVED.


DISTRICT/CUSTOMER NAME:
NEXTMOD

SCHOOL/SITE NAME:
STOCKPILE

SHEET TITLE:

TYPICAL STRUCTURAL DETAILS

PRE-CHECK (PC) DOCUMENT
CODE: 2022 CBC
A SEPARATE PROJECT APPLICATION FOR CONSTRUCTION IS REQUIRED

APPROVED
DIV. OF THE STATE ARCHITECT
APP: 04-122454 PC
REVIEWED FOR
SS ☑ FLS ☑ ACS ☑ CG ☑
DATE: 11/14/2023

PROFESSIONAL OF RECORD ON PC


ORION
Structural Engineering, Inc.
11305 RANCHO BERNARDO RD
SUITE 121
SAN DIEGO CA 92127
PHONE (858) 679-1974
REGISTERED PROFESSIONAL ENGINEER
MAX J. OLIER
No. 74537
EXP. 12/31/24
STRUCTURAL
STATE OF CALIFORNIA

FIRM: Orion Structural Engineering, Inc.
ADDRESS: 11305 Rancho Bernardo Road Ste 121
CITY: San Diego, CA
PHONE: 858-679-1974


PROJECT SPECIFIC PROFESSIONAL OF RECORD

FIRM:
ADDRESS:
CITY:
PHONE:

REVISIONS
1 -
2 -
3 -
4 -
5 -

| | |
|---|---|
| PROJECT NO.: | 00-0000 |
| DRAFTER: | 00 |
| SCALE: | AS NOTED |
| DATE: | 00-00-00 |

SHEET NUMBER
S0.3

10/31/2023 12:04:01 PM

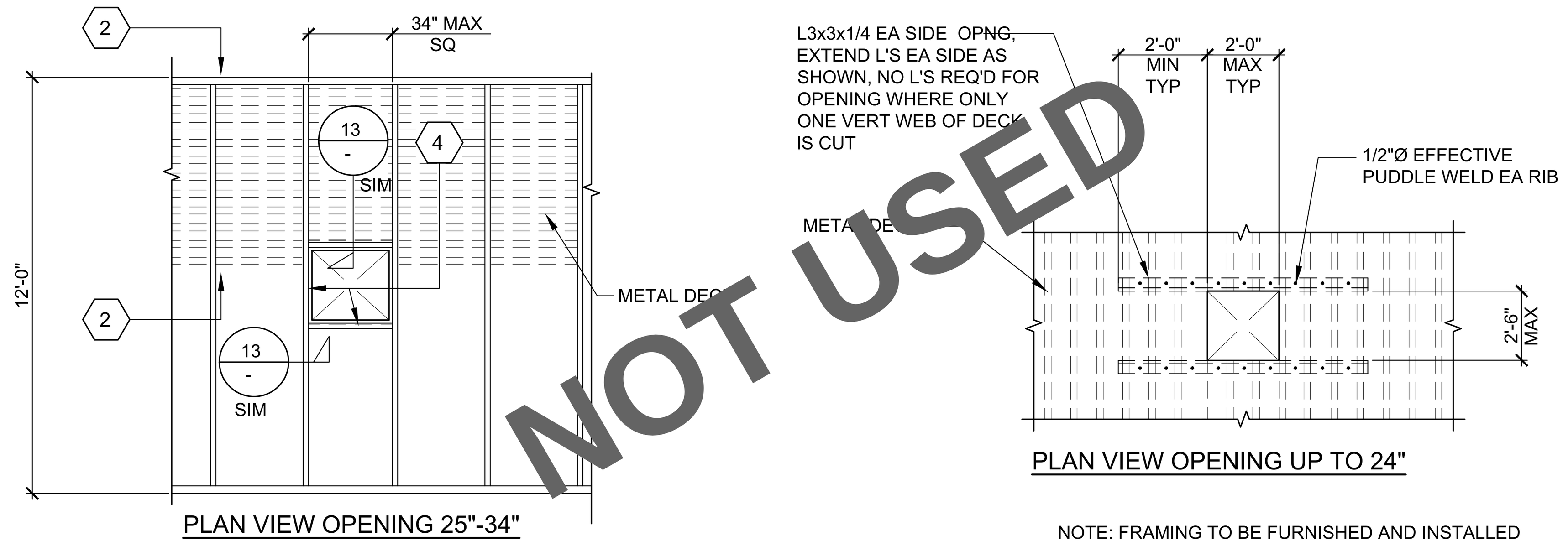


NOTE: FRAMING TO BE FURNISHED AND INSTALLED WITH STRUCTURAL STEEL. INSTALL DECK CLOSURE ℄ AS REQUIRED WHERE OPENING OCCURS IN CONCRETE PAD ON METAL DECK.

## OPENINGS IN METAL DECK
SCALE: NTS

9

| METAL FLOOR DECKING | |
|---|---|
| METAL DECK MIN SECTION PROPERTIES & DATA | |
| DECK DEPTH | 1 1/2" |
| GAUGE | 20 |
| MOMENT OF INTERIA, I (IN.) $^4$ | 0.213 |
| SECTION MODULUS S (+) (IN.) $^3$ | [illegible] |
| S (-) (IN.) $^3$ | 0.[illegible]7 |
| FINISH | GALVANIZED |

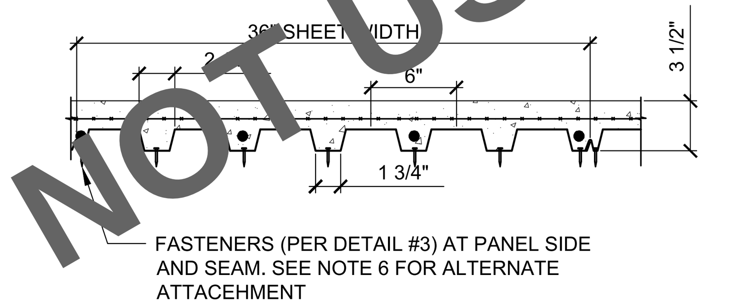


## METAL FLOOR DECKING
SCALE: NTS

14

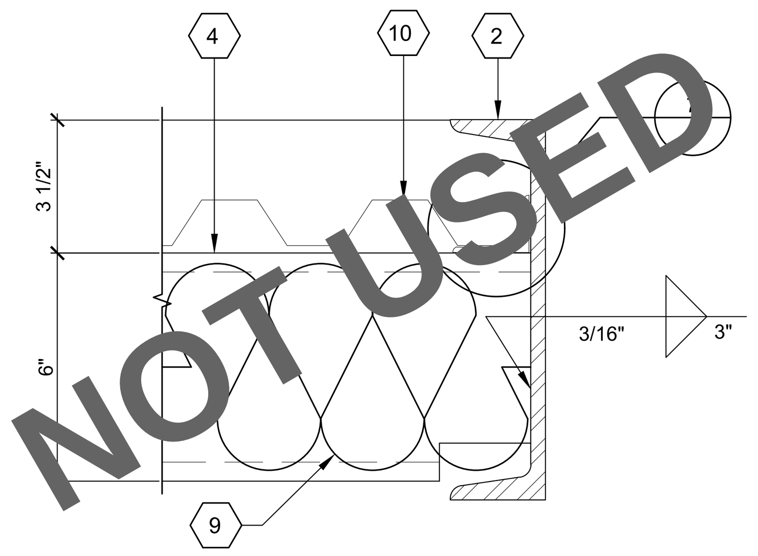


## FLOOR JOIST TO CHANNEL (CONCRETE)
SCALE: 3" = 1'-0"

10

MINIMUM DECK CONNECTION ALL SUPPORTS:
1/2"Ø EFFECTIVE ARC SPOT OR ARC SEAM (PUDDLE) WELDS AT ALL STEEL SUPPORTS. PUDDLE WELDS AT 12" OC PERPINDICULAR TO DECK FRAMING. 24" OC AT FRAMING PARALLEL TO DECK FRAMING. PROVIDE BUTTON PUNCH AT 24" OC @ ALL DECK SEAMS

NOTES:
1. DECK LAYOUT SHALL PROVIDE ALL DECK SHEETS OF SUFFICIENT LENGTH TO EXTEND CONTINUOUSLY OVER AT LEAST 3 SPANS
2. ENDS OF ADJOINING DECK SHEETS SHALL BE LAPPED 2"
3. NO SHORING IS REQUIRED FOR DECK, UNO
4. METAL B-DECK SHALL BE VERCO MANUFACTURING CO. PER IAMPO #ER-217 OR APPROVED EQUAL. DECK TO BE ASTM A653 SS DESIGNATION GRADE 50 MINIMUM.
5. LIGHT WEIGHT CONCRETE FLOOR SHALL BE REINFORCED WITH 6x6 W1.4xW1.4 WWF PLACED AT MID-DEPTH OF THE FLOOR OVER THE TOP FLUTE OF THE METAL DECK. 1 1/2" X 20 GA. B-DECK WITH 3 1/2" LIGHT WEIGHT CONCRETE FILL (2" OVER DECK FLUTES)
6. ALTERNATE ATTACHMENT OF B-DECK TO FLOOR JOIST:
'HILTI' X-ENP-19 L15 FASTENER OR EQUAL,
7 PINS PER SHEET TO PERPENDICULAR SUPPORTS PER ICC REPORT #ESR-2197. VSC2 AT 12" OC MAX. SEE DETAIL #14
FOR SELF-DRILLING SCREWS USE #14 X 1-1/4" MIN
7. LIGHT WEIGHT CONCRETE FLOOR SHALL HAVE A MINIMUM ULTIMATE COMPRESSIVE STRENGTH OF 3,000 PSI AT 28 DAYS
8. SEE DETAIL #14 FOR ADDITIONAL INFORMATION

Page 7 of 179 IAPMO UES Evaluation Report No. 0217
Expires: 11/2018 Issued: 11/2011

FIGURE 5 - ATTACHMENT PATTERNS

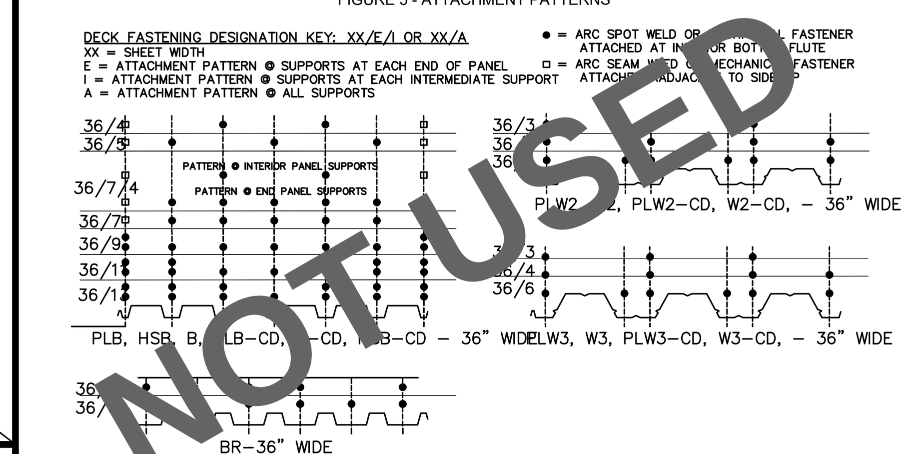


## LIGHT WEIGHT CONCRETE FLOOR NOTES
SCALE: NTS

3

## KEY NOTES

1. PLYWOOD FLOOR SHEATHING
2. PERIMETER CHANNEL (SEE STRUCTURAL FLOOR FRAMING PLANS)
3. LAG SCREWS FOR POSITIVE MODLINE CONNECTION AT ABOVE GRADE WOOD FOUNDATION CONDITION. REFER TO FOUNDATION SHEET FOR INFORMATION AND QUANITITY. DRILL 11/16 HOLE
4. FLOOR JOIST AND/OR BLOCK (SEE STRUCTURAL FLOOR FRAMING PLANS)
5. 5/8" MACHINE BOLT. SEE SHEET S0.1 OR S0.2 FOR SPACING
6. 2X BLOCK NAILER FOR HAND ACCESS HOLE CLOSE-UP. USE MIN #10 X 3" WOOD SCREWS
7. RE-SECURE PLYWOOD PIECE AND ATTACH TO 2X BLOCK WITH MIN (2) #10 X 3" WOOD SCREWS AT 6" Ø PIECE OR MIN (4) FASTENERS AT 6" SQ PIECE
8. 4"x6"x1/4" PLATE AT 8" CHANNEL SPLICE. 4"x8"x1/4" PLATE AT 10" CHANNEL SPLICE
9. SEE SHEET A0.2 FOR INSULATION VALUE. SEE #13/A8.1 FOR REF
10. METAL DECK FLOOR (SEE DETAIL 14)
11. NOT USED
12. MINIMUM 2"x2"x1/4" THICK PLATE. PLATE QUANTITY TO BE FIELD VERIFY
13. 2"x2"x1/4" ANGLE SUPPORT
14. NOT USED
15, NOT USED
16. INSULATION ON 'SEAL TITE' TYPE HW POLYMAX UNDERBELLY OR EQUAL WITH BI-DIRECTIONAL POLYESTER FIBERS
17. BOTTOM BOARD
18. FASTENERS TO MATCH BOUNDARY NAILING ALONG PERIMETER OF OPENING.

NOTE:
MAX. (2) ADJACENT WEBS CUT IF MORE THAN (2) WEBS ARE NOTCHED, SEE DETAIL #9

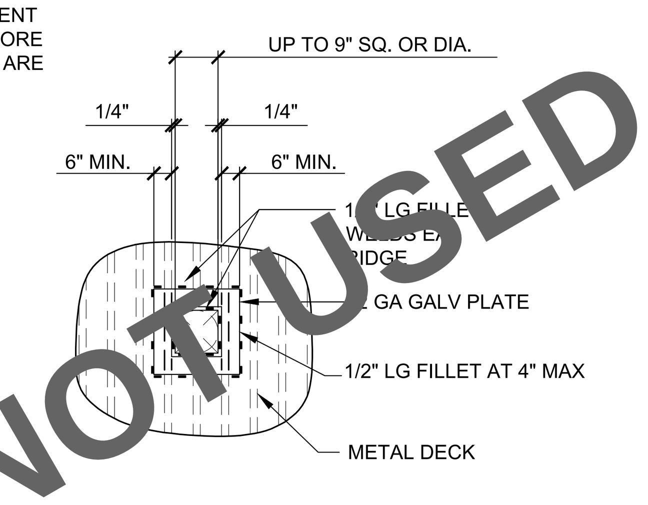


## TYPICAL SMALL REINFORCED DECK OPENING UP TO 9" MAX
SCALE: NTS

15

NOTE:
SPLICE MAY OCCUR AT ANY POINT MIN. 18" FROM BOLT LOCATION

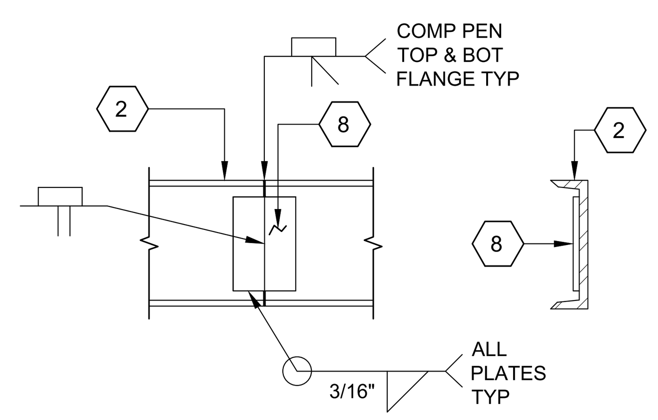


## CHANNEL SPLICE
SCALE: 1 1/2" = 1'-0"

11

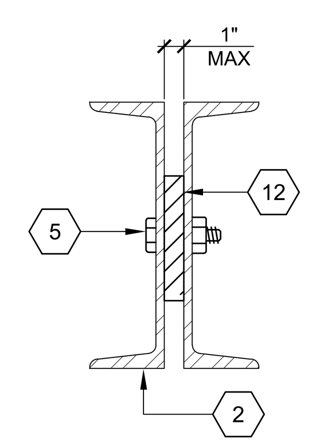


## ALTERNATE MODLINE ATTACHMENT
SCALE: 1 1/2" = 1'-0"

6

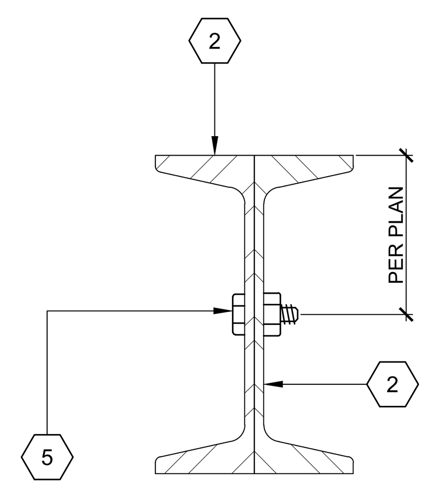


## FLOOR FRAME AT MODLINE (PLY'D FLR)
SCALE: 3" = 1'-0"

1

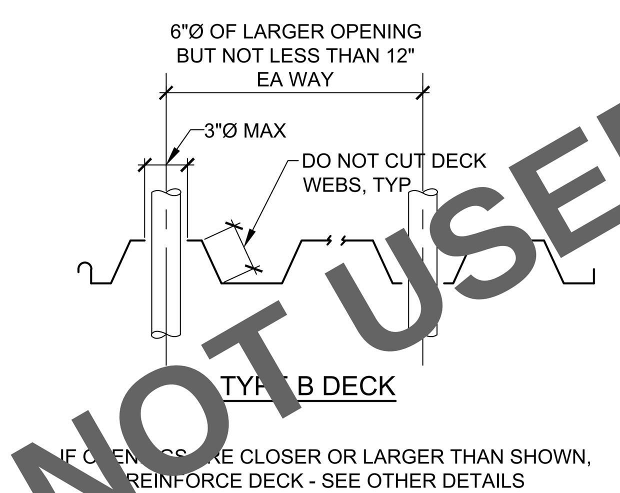


## UNREINFORCED OPENING AT DECK
SCALE: NTS

16

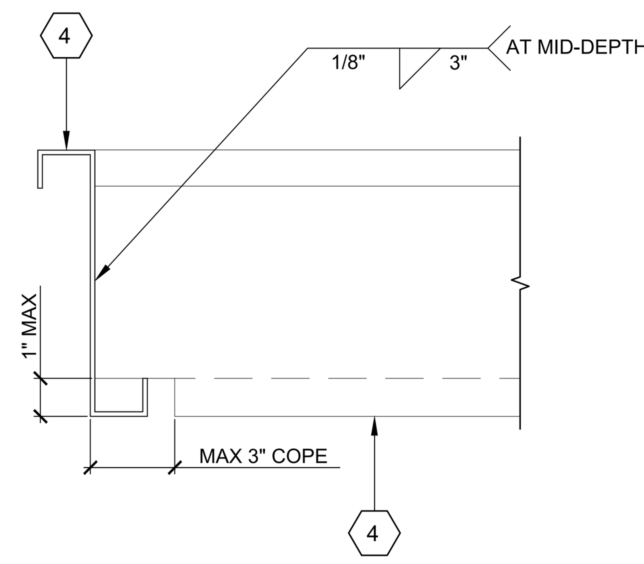


## JOIST TO JOIST (WOOD)
SCALE: 1 1/2" = 1'-0"

12

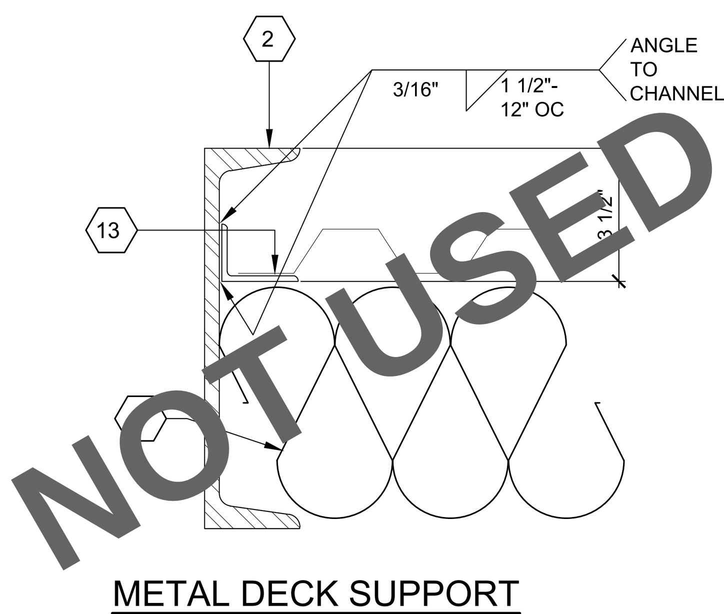


## METAL DECK SUPPORT ANGLE ATTACHMENT
SCALE: 1 1/2"" = 1'-0"

7

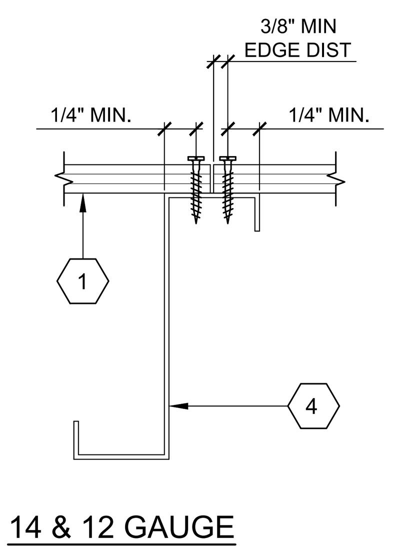


## FLOOR JOIST
SCALE: 3" = 1'-0"

4

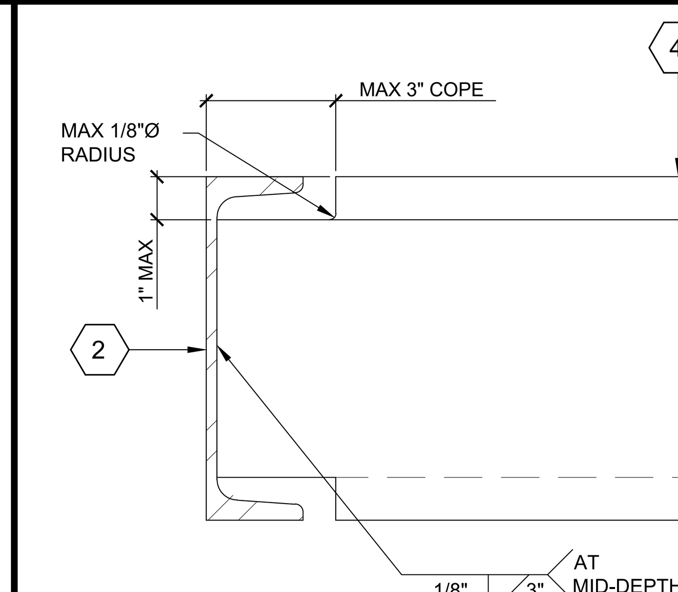


## FLOOR JOIST TO CHANNEL-WOOD
SCALE: 3" = 1'-0"

2

17

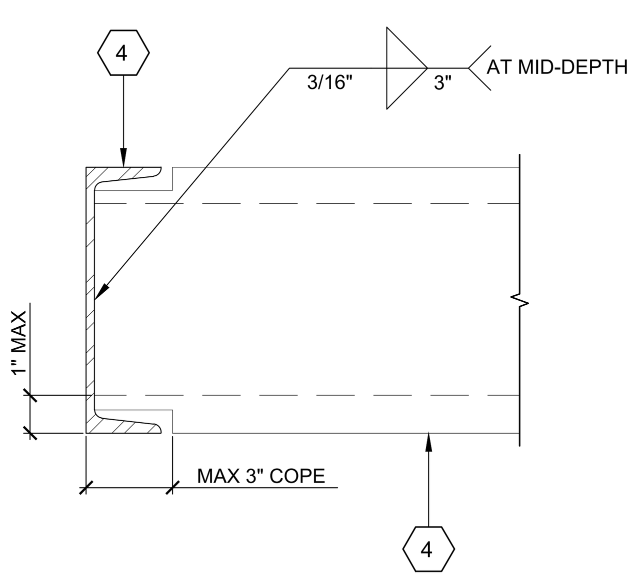


## JOIST TO JOIST (CONCRETE)
SCALE: 1 1/2" = 1'-0"

13

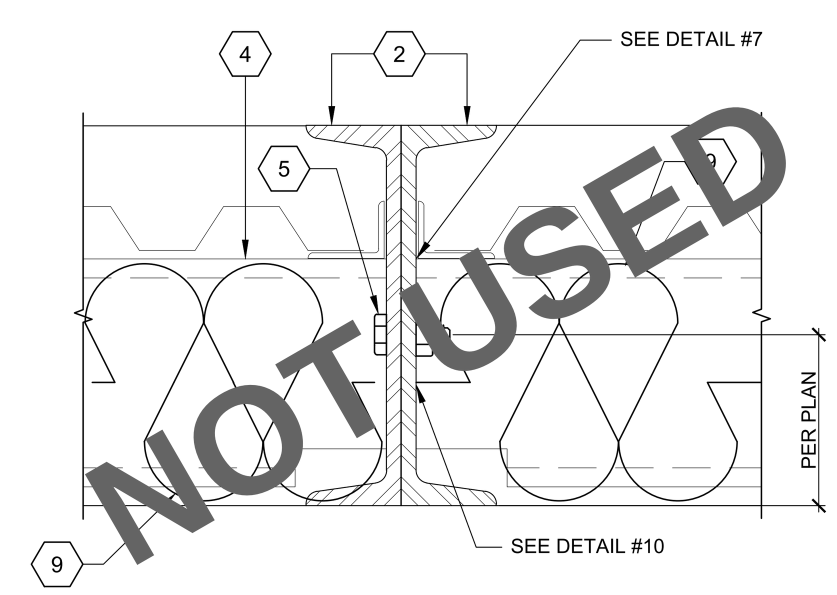


## FLOOR FRAME AT MODLINE (CONCRETE)
SCALE: 3" = 1'-0"

8

NOTE: IF USING WALL MOUNT WATER CLOSET FOR AGE GROUP 5-12. SEE DETAIL 5B FOR NOTCH DETAIL TO ALLOW CARRIER TO BE SET LOWER.

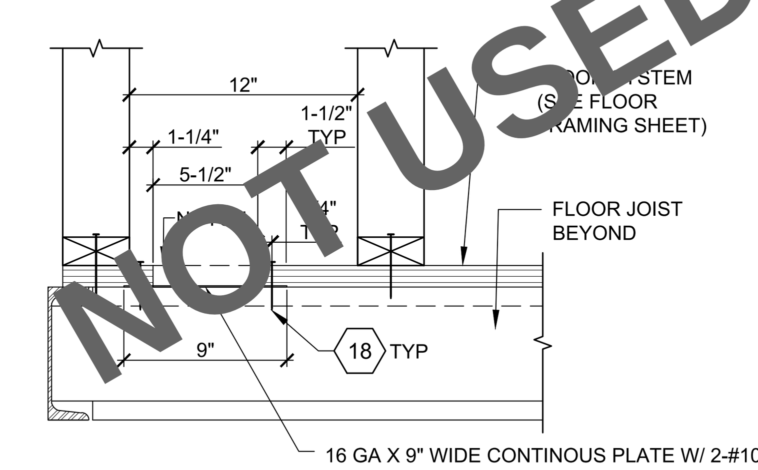


## FLOOR NOTCH AT CHASE WALL JOIST DETAIL
SCALE: 1 1/2" = 1'-0"

5B

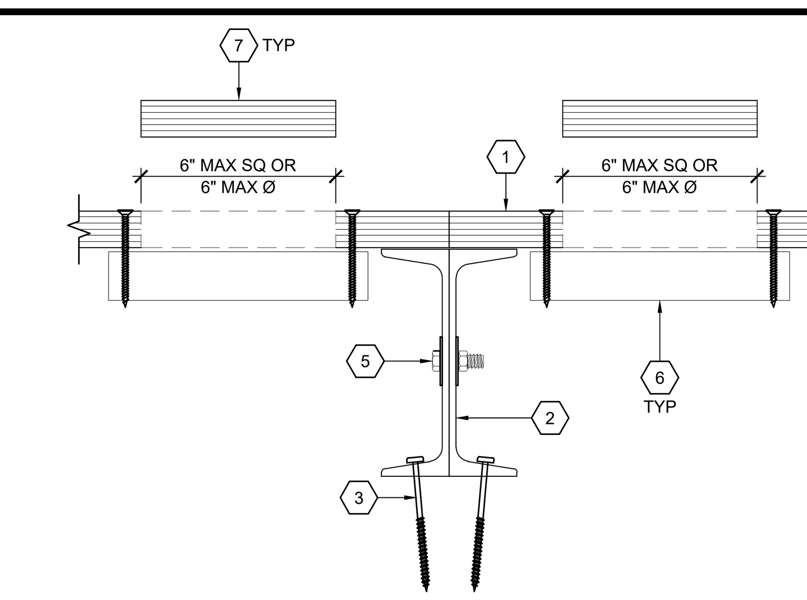


## MODLINE PLYWOOD FLOOR HAND ACCESS HOLE
SCALE: 3" = 1'-0"

5A

STATE AGENCY APPROVAL

IDENTIFICATION STAMP
DIV. OF THE STATE ARCHITECT
APP. 04-124098 INC:
REVIEWED FOR
SS ☑ FLS ☑ ACS ☑
DATE: 11/14/24

SKC COMPANY
15345 FAIRFIELD RANCH ROAD, SUITE #160, CHINO, CA 91709
OFFICE: (909) 740-3120, FAX: (909) 726-9470
WEBSITE: WWW.SKCCOMPANY.COM
MANUFACTURER #MF1279666 DEALER # DL1279666
GC LIC # 992118 SBE CERTIFIED

ALL DESIGNS INDICATED ON THESE PLANS/DRAWINGS ARE PROPERTY OF SKC, INC AND ARE FOR THE USE BY SKC IN THE SPECIFIED JOB ONLY. THEY SHALL NOT BE USED AND/OR DUPLICATED OR TRANSMITTED IN ANY FORM, FOR ANY PURPOSE WITHOUT THE PRIOR WRITTEN CONSENT OF SKC, INC. ANY UNAUTHORIZED USE OF THESE PLANS SHALL SUBJECT THE OWNER OF SAID PROPERTY TO LIQUIDATED DAMAGES OF $75,000.00. THESE PLANS ARE PROTECTED UNDER THE PROVISIONS OF THE 1976 COPYRIGHT ACT COPYRIGHT SKC, © ALL RIGHTS RESERVED.

DISTRICT/CUSTOMER NAME: NEXTMOD

SCHOOL/SITE NAME: STOCKPILE

SHEET TITLE:

FLOOR FRAMING DETAILS
PLYWOOD & CONCRETE

PRE-CHECK (PC) DOCUMENT
CODE: 2022 CBC
A SEPARATE PROJECT APPLICATION FOR CONSTRUCTION IS REQUIRED

APPROVED
DIV. OF THE STATE ARCHITECT
APP: 04-122454 PC
REVIEWED FOR
SS ☑ FLS ☑ ACS ☑ CG ☑
DATE: 11/14/2023

PROFESSIONAL OF RECORD ON PC

ORION
Structural Engineering, Inc.
11305 RANCHO BERNARDO RD SUITE 121
SAN DIEGO CA. 92127
PHONE (858) 679-1974

REGISTERED PROFESSIONAL ENGINEER RYAN J. OVER No. S 4437 EXP. 12/31/24 STRUCTURAL STATE OF CALIFORNIA

FIRM: Orion Structural Engineering, Inc.
ADDRESS: 11305 Rancho Bernardo Road Ste 121
CITY: San Diego, CA
PHONE: 858-679-1974

PROJECT SPECIFIC PROFESSIONAL OF RECORD

FIRM:
ADDRESS:
CITY:
PHONE:

REVISIONS

| | |
|---|---|
| 1 | - |
| 2 | - |
| 3 | - |
| 4 | - |
| 5 | - |

| | |
|---|---|
| PROJECT NO.: | 00-0000 |
| DRAFTER: | 00 |
| SCALE: | AS NOTED |
| DATE: | 00-00-00 |

SHEET NUMBER

# S1.0

10/31/2023 12:04:19 PM

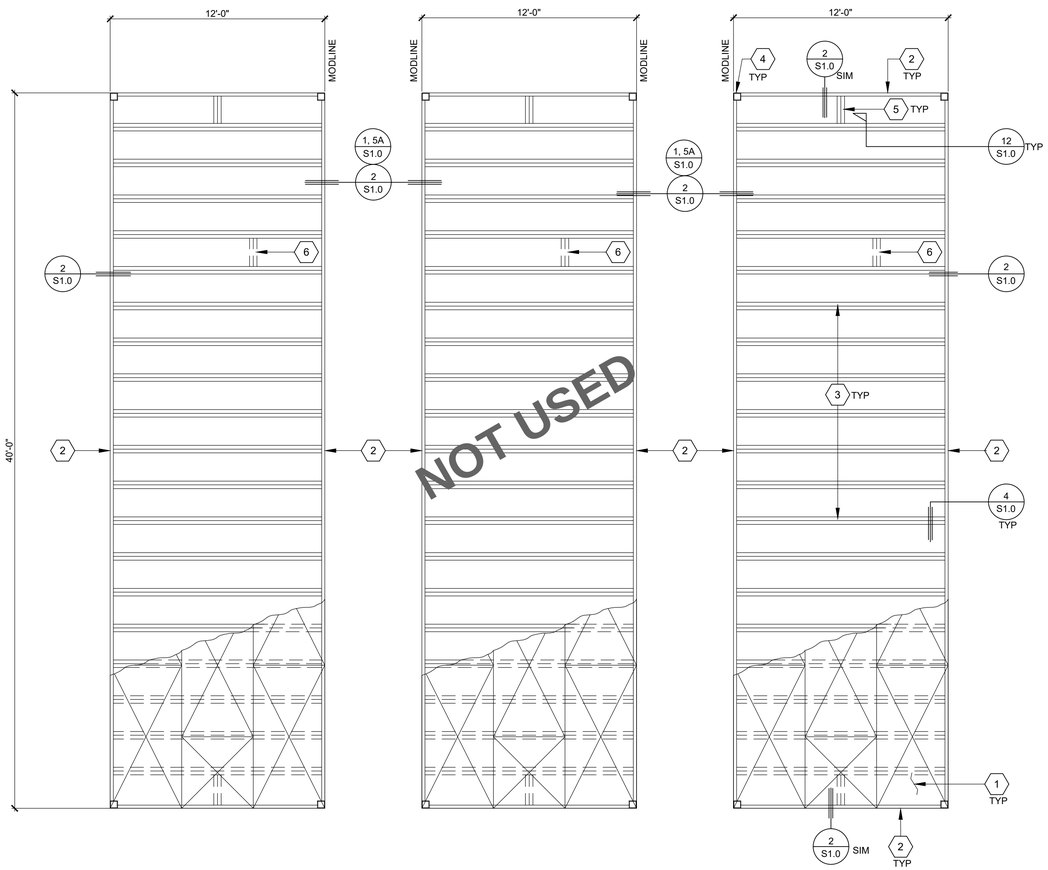


LEFT HAND MODULE

~~TYPICAL CENTER MODULE~~

RIGHT HAND MODULE

## FLOOR FRAMING PLAN

SCALE: 1/4" = 1'-0"

NOTE:
IF SITE SPECIFIC PROJECT IS LARGER THAN 2160 SF AND SET ON A BELOW GRADE FOUNDATION, IT MUST ABIDE BY THE DETERIORATION PROTECTION REQUIREMENTS AND DETAILS A20.0 OR A20.1

IF BUILDING WAS ORIGINALLY CONSTRUCTED ON AN ABOVE GRADE FOUNDATION AND AT A LATER TIME SET ON A BELOW GRADE FOUNDATION, A DSA-1 AMM SHALL BE SUBMITTED TO DSA FOR REVIEW

## KEY NOTES

1. PLYWOOD FLOOR SHEATHING: 1 1/8" A.P.A. RATED STURD-1-FLOOR OR EQUAL. PS 1-09 T&G EDGES, 48" SPAN RATING; ATTACH TO STEEL JOIST WITH MIN #10-24x1 1/2" FH SELF TAP SCREWS @ 6" OC EDGE NAILING & EDGES AND 10" OC FIELD NAILING.
   AT BOUNDARIES, USE TEK SCREWS MIN #12-14x2 1/2" (MIN 0.145"Ø) PAN HEAD SELF TAP SCREWS BY ITW BUILDEX (ICC REPORT # ESR-1976) AT 4" OC, MIN 3 THREADS PAST THE STEEL MEMBER. PROVIDE FIELD NAILING AT 6"OC WHERE FLOOR JOIST ARE AT 48" OC. MIN 24" SHEET DIMENSION

   ALTERNATE PLYWOOD FLOOR SHEATING: 23/32 CAT, A.P.A RATED STURD-1-FLOOR, PS 1-09 WHERE JOIST SPACING ARE 24" OC OR LESS
2. C-7" x 9.8 LB PERIMETER FRAME
3. FLOOR JOIST MEMBER (FLOOR JOIST ARE SHOWN AT 48" OC AS AN EXAMPLE ONLY SEE SCHEDULE BELOW FOR SPACING)
4. STEEL STUB COLUMN
5. JOIST BLOCK MEMBER AT MID SPAN (SAME MEMBER AS TYP FLOOR JOIST). SECURE PLYWOOD TO THIS MEMBER AT 6" OC MAX
6. JOIST BLOCKING ONLY WHERE INTERIOR WALL(S) FALLS PARALLEL TO FLOOR JOISTS. PLACE BLOCKING @ MAX 48"

| STANDARD FLOOR JOIST SCHEDULE (14 GA) | |
|---|---|
| FLOOR LIVE LOAD | SPACING |
| ~~50~~ | ~~24" OC MAX (RATING SAME AS 50+15 FLL)~~ |
| 50+15 | 24" OC MAX |
| ~~100~~ | ~~16" OC~~ |
| ~~125~~ | ~~16" OC~~ |

| ALTERNATE FLOOR JOIST SCHEDULE (12 GA) | |
|---|---|
| FLOOR LIVE LOAD | SPACING |
| ~~50~~ | ~~24" OC MAX (RATING SAME AS 100 FLL)~~ |
| 50+15 | 24" OC MAX (RATING SAME AS 100 FLL) |
| ~~100~~ | ~~24" OC~~ |
| ~~125~~ | ~~16" OC~~ |

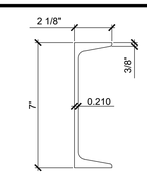


Ix = 21.3
Sx = 6.08
Fy = 36 KSI

FLOOR CHANNEL
SCALE: 3" = 1'-0"

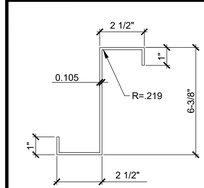


Ix = 10.62
Sx = 3.034
Fy = 40 KSI

12 GA
FLOOR JOIST/BLOCKING
SCALE: 3" = 1'-0"

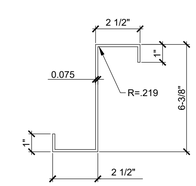


Ix = 7.731
Sx = 2.209
Fy = 40 KSI

14 GA
FLOOR JOIST/BLOCKING
SCALE: 3" = 1'-0"

STATE AGENCY APPROVAL

IDENTIFICATION STAMP
DIV. OF THE STATE ARCHITECT
APP. 04-124098 INC:
REVIEWED FOR
SS ☑ FLS ☑ ACS ☑
DATE: 11/14/24

SKC COMPANY
15345 FAIRFIELD RANCH ROAD, SUITE #160, CHINO, CA 91709
OFFICE: (909) 740-3120, FAX: (909) 726-9470
WEBSITE: WWW.SKCCOMPANY.COM
MANUFACTURER #MF127666 DEALER # DL127666
GC LIC # 992118 SBE CERTIFIED

ALL DESIGNS INDICATED ON THESE PLANS/DRAWINGS ARE PROPERTY OF SKC, INC AND ARE FOR THE USE BY SKC IN THE SPECIFIED JOB ONLY. THEY SHALL NOT BE USED AND/OR DUPLICATED OR TRANSMITTED IN ANY FORM, FOR ANY PURPOSE WITHOUT THE PRIOR WRITTEN CONSENT OF SKC, INC. ANY UNAUTHORIZED USE OF THESE PLANS SHALL SUBJECT THE OWNER OF SAID PROPERTY TO LIQUIDATED DAMAGES OF $75,000.00. THESE PLANS ARE PROTECTED UNDER THE PROVISIONS OF THE 1976 COPYRIGHT ACT COPYRIGHT SKC, © ALL RIGHTS RESERVED.

DISTRICT/CUSTOMER NAME:
NEXTMOD

SCHOOL/SITE NAME:
STOCKPILE

SHEET TITLE:

FLOOR FRAMING PLAN
PLYWOOD

PRE-CHECK (PC) DOCUMENT
CODE: 2022 CBC
A SEPARATE PROJECT APPLICATION FOR CONSTRUCTION IS REQUIRED

APPROVED
DIV. OF THE STATE ARCHITECT
APP: 04-122454 PC
REVIEWED FOR
SS ☑ FLS ☑ ACS ☑ CG ☑
DATE: 11/14/2023

PROFESSIONAL OF RECORD ON PC

ORION
Structural Engineering, Inc.
11305 RANCHO BERNARDO RD
SUITE 121
SAN DIEGO CA, 92127
PHONE (858) 679-1974

REGISTERED PROFESSIONAL ENGINEER
RAB T. ORION
No. 74537
Exp. 12/31/24
STRUCTURAL
STATE OF CALIFORNIA

FIRM: Orion Structural Engineering, Inc.
ADDRESS: 11305 Rancho Bernardo Road Ste 121
CITY: San Diego, CA
PHONE: 858-679-1974

PROJECT SPECIFIC PROFESSIONAL OF RECORD

FIRM:
ADDRESS:
CITY:
PHONE:

REVISIONS
1 -
2 -
3 -
4 -
5 -

| | |
|---|---|
| PROJECT NO.: | 00-0000 |
| DRAFTER: | 00 |
| SCALE: | AS NOTED |
| DATE: | 00-00-00 |

SHEET NUMBER

S1.1

10/31/2023 12:04:33 PM

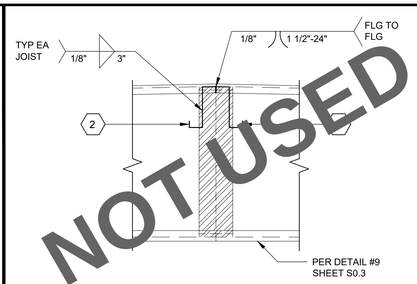


16 DOUBLE JOIST AT RIDGE 11
SCALE: 3" = 1'-0"

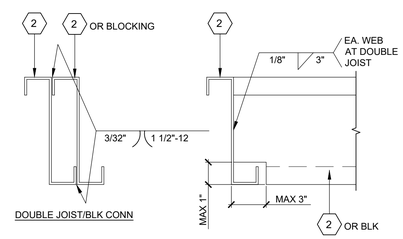


JOIST TO JOIST 6
SCALE: 3" = 1'-0"

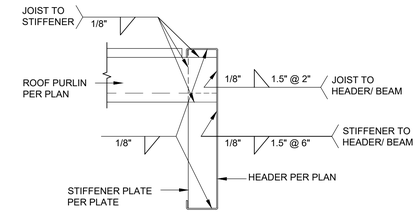


STIFFENER TO ROOF HEADER/BEAM 1
SCALE: 1 1/2" = 1'-0"

## KEY NOTES

1. ROOF HEADER/BEAM (SEE STRUCTURAL ROOF FRAMING PLAN)
2. ROOF JOIST (SEE STRUCTURAL ROOF FRAMING PLAN)
3. DOUBLE JOIST BLOCKING
4. ROOF MOUNTED A/C UNIT (SEE MECHANICAL PLANS)
5. 1/4" STIFFENER
6. L-1 1/2" x 1 1/2" x 3/16" BRACE
7. 5/8" MACHINE BOLT. SHEET S0.1 AND S0.2 FOR SPACING
8. OVERHANG OUTRIGGER FASCIA (SEE STRUCTURAL ROOF FRAMING PLAN)
9. PLYWOOD ROOF
10. NOT USED
11. NOT USED

17

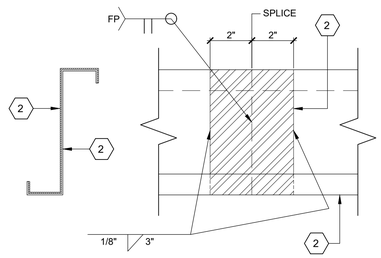


ALT ROOF JOIST SPLICE 12
SCALE: NTS

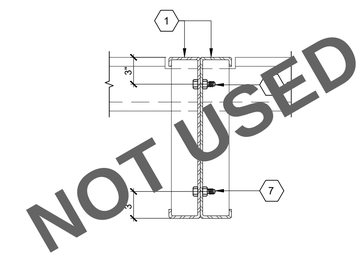


ALTERNATE MODLINE CONNECTION 7
SCALE: 1 1/2" = 1'-0"

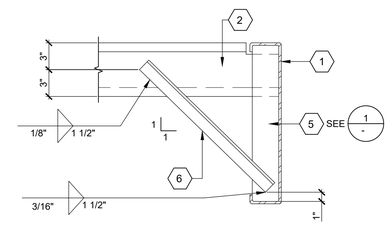


BRACE AT ROOF 2
SCALE: 1 1/2" = 1'-0"

18

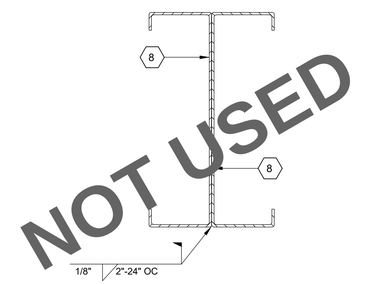


ALT. OVERHANG CONNECTION (CHANNEL) 13
SCALE: 3" = 1'-0"

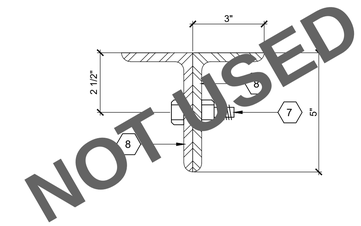


OVERHANG CONNECTION (ANGLE) 8
SCALE: 4" = 1'-0"

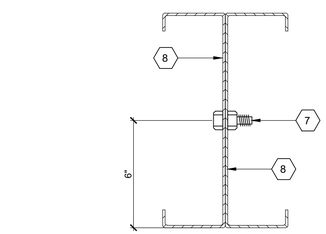


OVERHANG CONNECTION (CHANNEL) 3
SCALE: 3" = 1'-0"

19

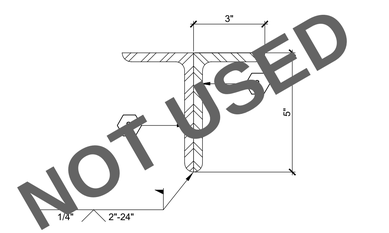


ALT. OVERHANG CONNECTION (ANGLE) 14
SCALE: 4" = 1'-0"

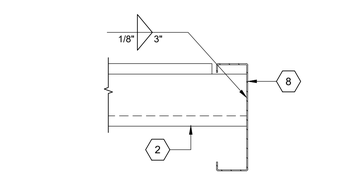


OVERHANG JOIST TO OUTRIGGER 9
SCALE: NTS

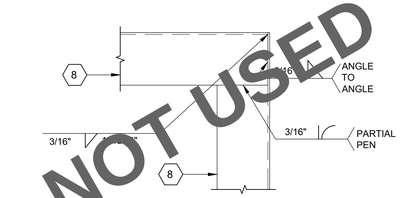


OVERHANG CONNECTION (ANGLE) 4
SCALE: 1 1/2" = 1'-0"

20

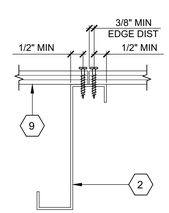


ROOF JOIST 15
SCALE: 3" = 1'-0"

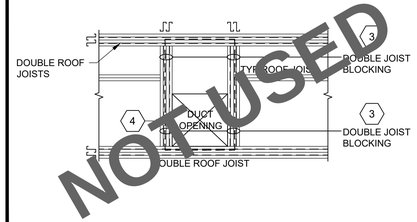


TYPICAL ROOF MOUNT A/C SUPPORT 10
SCALE: NTS

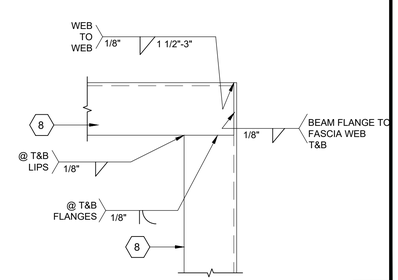


OVERHANG CONNECTION (CHANNEL) 5
SCALE: 1 1/2" = 1'-0"

STATE AGENCY APPROVAL

IDENTIFICATION STAMP
DIV. OF THE STATE ARCHITECT
APP. 04-124098 INC:
REVIEWED FOR
SS ☑ FLS ☑ ACS ☑
DATE: 11/14/24

SKC COMPANY

15345 FAIRFIELD RANCH ROAD, SUITE #160, CHINO, CA 91709
OFFICE: (909) 740-3120, FAX: (909) 726-9470
WEBSITE: WWW.SKCCOMPANY.COM
MANUFACTURER #MF1279666 DEALER # DL1279666
GC LIC # 992118 SBE CERTIFIED

ALL DESIGNS INDICATED ON THESE PLANS/DRAWINGS ARE PROPERTY OF SKC, INC AND ARE FOR THE USE BY SKC IN THE SPECIFIED JOB ONLY. THEY SHALL NOT BE USED AND/OR DUPLICATED OR TRANSMITTED IN ANY FORM, FOR ANY PURPOSE WITHOUT THE PRIOR WRITTEN CONSENT OF SKC, INC. ANY UNAUTHORIZED USE OF THESE PLANS SHALL SUBJECT THE OWNER OF SAID PROPERTY TO LIQUIDATED DAMAGES OF $75,000.00. THESE PLANS ARE PROTECTED UNDER THE PROVISIONS OF THE 1976 COPYRIGHT ACT COPYRIGHT SKC, © ALL RIGHTS RESERVED.

DISTRICT/CUSTOMER NAME:
NEXTMOD

SCHOOL/SITE NAME:
STOCKPILE

SHEET TITLE:

ROOF FRAMING DETAILS

PRE-CHECK (PC) DOCUMENT
CODE: 2022 CBC
A SEPARATE PROJECT APPLICATION FOR CONSTRUCTION IS REQUIRED

APPROVED
DIV. OF THE STATE ARCHITECT
APP: 04-122454 PC
REVIEWED FOR
SS ☑ FLS ☑ ACS ☑ CG ☑
DATE: 11/14/2023

PROFESSIONAL OF RECORD ON PC

ORION
Structural Engineering, Inc.
11305 RANCHO BERNARDO RD
SUITE 121
SAN DIEGO CA, 92127
PHONE (858) 679-1974

RYAN J. OWEN
S5201
EXP. 12/31/24
STRUCTURAL
STATE OF CALIFORNIA

FIRM: Orion Structural Engineering, Inc.
ADDRESS: 11305 Rancho Bernardo Road Ste 121
CITY: San Diego, CA
PHONE: 858-679-1974

PROJECT SPECIFIC PROFESSIONAL OF RECORD

FIRM:
ADDRESS:
CITY:
PHONE:

REVISIONS
1 -
2 -
3 -
4 -
5 -

| | |
|---|---|
| PROJECT NO.: | 00-0000 |
| DRAFTER: | 00 |
| SCALE: | AS NOTED |
| DATE: | 00-00-00 |

SHEET NUMBER
S2.0

10/31/2023 12:05:05 PM

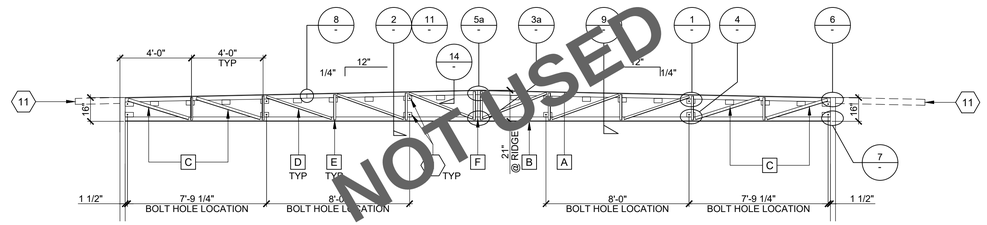


## DUAL SLOPE TRUSS AT MODLINE

SCALE: 1/4" = 1'-0"

A

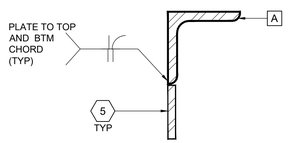


## PLATE @ TOP CORD CONNECTION

SCALE: 3" = 1'-0"

14

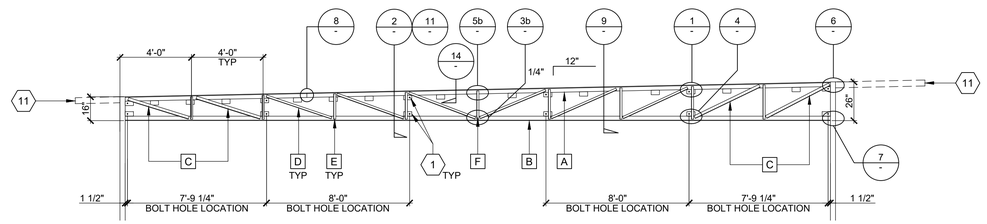


## MONO SLOPE TRUSS AT MODLINE

SCALE: 1/4" = 1'-0"

B

## KEY NOTES

1. 3/8" X 3" x 5 1/2" PLATE (A-36 STEEL) WITH 11/16" HOLE FOR 5/8" MACHINE BOLT PLATES AT 8'-0" OC MAX WHERE OCCURS PER ELEVATION FOR MODULE CONNECTION SEE DETAIL 2
2. 5/8"Ø MACHINE BOLT AT 8'-0" OC MAX
3. 6" LONG x 1/4" BACK UP PLATE (A-36 STEEL)
4. 1/4" FULL DEPTH STIFFENER PLATE
5. 3/8" X 3" X 5 1/2" PLATE
6. NOT USED
7. STEEL ROOF JOIST
8. L-1 1/2" X 1 1/2" X 3/16" BRACE EACH SIDE @ 8'-0" OC MAX
9. STEEL COLUMN
10. STEEL STUB COLUMN
11. OVERHANG
12. WHERE DIAGONAL CHORD DOES NOT ACHIEVE MIN WELD PER DETAIL DUE TO TOLERANCES, USE ADDITIONAL PLATES AS REQUIRED. PLATES SHALL MEET THE SAME SIZE AND GRADE PER KEYNOTE #01. WELD ADDITIONAL PLATE PER DETAIL #2/-

## GENERAL NOTES

1. ALL STEEL GRADES TO BE A-36 PER SHEET S0.0a
2. REQUIRED ELECTRODES FOR ALL WELDS TO BE E-70-XX OR EQUAL
3. VOLTAGE & AMPERAGE SHALL BE PER ELECTRODE MANUFACTURES SPECS
4. BOLTS & NUTS TO BE A307

### TRUSS SCHEDULE

| | | |
|---|---|---|
| A | TOP CHORD | L-3" X 3" X 3/8" |
| B | BOTTOM CHORD | L-3" X 3" X 3/8" |
| C | 1ST & 2ND DIAGONAL | L-2" X 2" X 3/16" - 4" TOTAL WELD COMBINED |
| D | TYPICAL DIAGONAL | L-1 1/2" X 1 1/2" X 3/16" - 1-1/2" FILLET WELD AT EACH SIDE EACH END. |
| E | TYPICAL VERTICAL | L-1 1/2" X 1 1/2" X 3/16" - 1-1/2" FILLET WELD AT EACH SIDE EACH END. |
| F | CAMBER | 5/8" AT MIDSPAN |

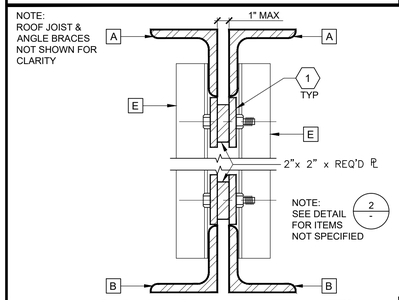


## GAP AT MODLINE (ALTERNATE)

11

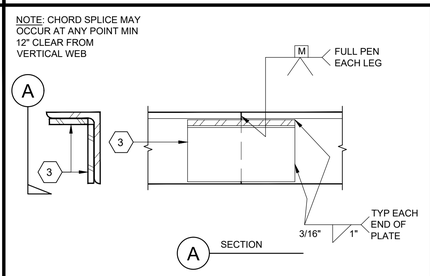


## TRUSS CHORD SPLICE

8

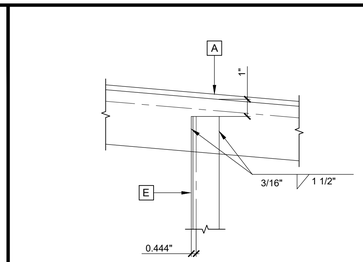


## TOP CHORD @ MIDPOINT (MONO SLOPE)

5b

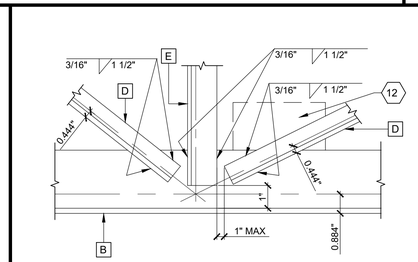


## BOTTOM CHORD @ MID SPAN (MONO SLOPE)

3b

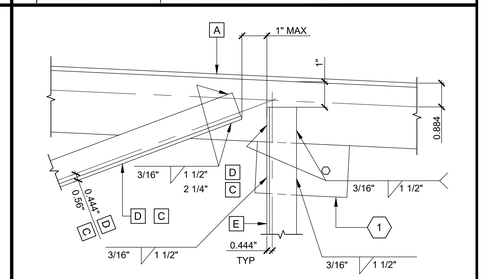


## VERTICLE & DIAGONAL TOP CHORD

1

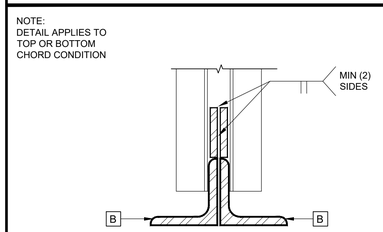


## ALTERNATE ATTACHMENT AT MISALIGNED BOLT CONNECTION

12

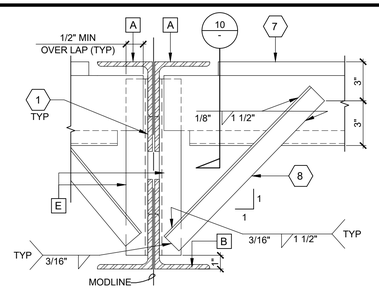


## TRUSS TO ROOF JOIST BRACING

9

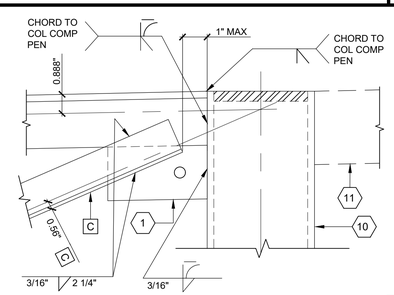


## POST CONNECTION TO TRUSS (TOP)

6

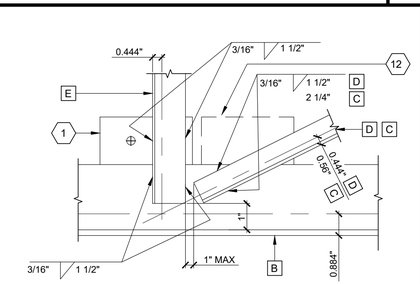


## VERT & DIAG TO BOTTOM CHORD

4

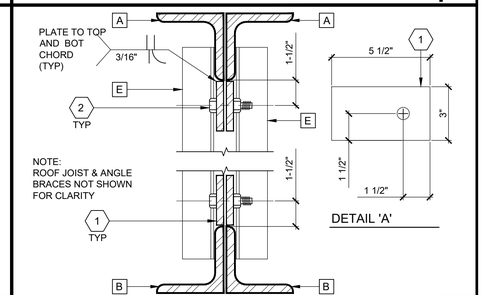


## TIE PLATE MODLINE CONNECTION

2

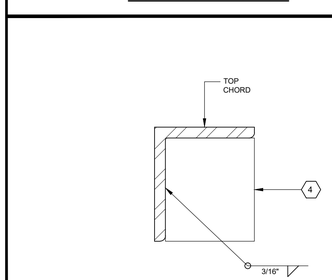


## SECTION AT TRUSS RIDGE

SCALE: 6" = 1'-0"

13

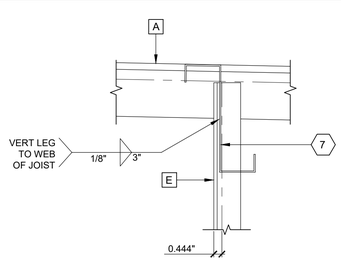


## STEEL JOIST TO VERTICAL LEG

10

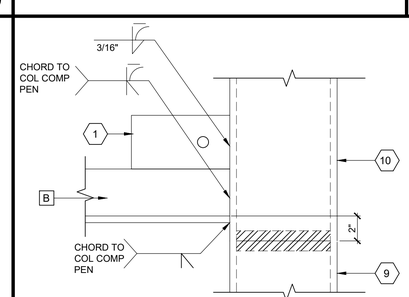


## POST CONN TO TRUSS (BOTTOM)

7

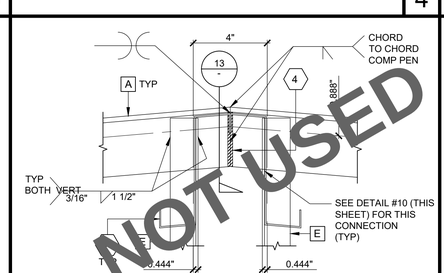


## TOP CHORD @ MID-POINT (DUAL SLOPE)

5a

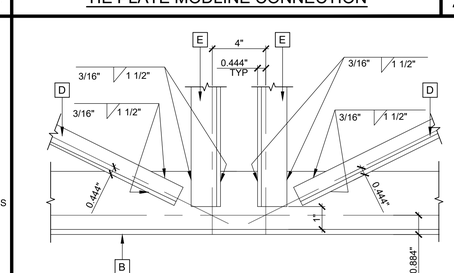


## BOTTOM CHORD AT MID-POINT (DUAL SLOPE)

3a

STATE AGENCY APPROVAL

IDENTIFICATION STAMP
DIV. OF THE STATE ARCHITECT
APP. 04-124098 INC:
REVIEWED FOR
SS ☑ FLS ☑ ACS ☑
DATE: 11/14/24

SKC COMPANY

15345 FAIRFIELD RANCH ROAD, SUITE #160, CHINO, CA 91709
OFFICE: (909) 740-3120, FAX: (909) 726-9470
WEBSITE: WWW.SKCCOMPANY.COM

MANUFACTURER #MF1279666 DEALER # DL1279666
GC LIC # 992118 SBE CERTIFIED

ALL DESIGNS INDICATED ON THESE PLANS/DRAWINGS ARE PROPERTY OF SKC, INC AND ARE FOR THE USE BY SKC IN THE SPECIFIED JOB ONLY. THEY SHALL NOT BE USED AND/OR DUPLICATED OR TRANSMITTED IN ANY FORM, FOR ANY PURPOSE WITHOUT THE PRIOR WRITTEN CONSENT OF SKC, INC. ANY UNAUTHORIZED USE OF THESE PLANS SHALL SUBJECT THE OWNER OF SAID PROPERTY TO LIQUIDATED DAMAGES OF $75,000.00. THESE PLANS ARE PROTECTED UNDER THE PROVISIONS OF THE 1976 COPYRIGHT ACT COPYRIGHT SKC, © ALL RIGHTS RESERVED.

DISTRICT/CUSTOMER NAME:
NEXTMOD

SCHOOL/SITE NAME:
STOCKPILE

SHEET TITLE:

ROOF TRUSS AND DETAILS

PRE-CHECK (PC) DOCUMENT
CODE: 2022 CBC
A SEPARATE PROJECT APPLICATION FOR CONSTRUCTION IS REQUIRED

APPROVED
DIV. OF THE STATE ARCHITECT
APP: 04-122454 PC
REVIEWED FOR
SS ☑ FLS ☑ ACS ☑ CG ☑
DATE: 11/14/2023

PROFESSIONAL OF RECORD ON PC

ORION
Structural Engineering, Inc.
11305 RANCHO BERNARDO RD
SUITE 121
SAN DIEGO CA 92127
PHONE (858) 679-1974

REGISTERED PROFESSIONAL ENGINEER
SEAN Z. OGLE
No. 81537
EXP. 12/31/24
STRUCTURAL
STATE OF CALIFORNIA

FIRM: Orion Structural Engineering, Inc.
ADDRESS: 11305 Rancho Bernardo Road Ste 121
CITY: San Diego, CA
PHONE: 858-679-1974

PROJECT SPECIFIC PROFESSIONAL OF RECORD

FIRM:
ADDRESS:
CITY:
PHONE:

REVISIONS

1 -
2 -
3 -
4 -
5 -

| | |
|---|---|
| PROJECT NO.: | 00-0000 |
| DRAFTER: | 00 |
| SCALE: | AS NOTED |
| DATE: | 00-00-00 |

SHEET NUMBER

S2.1

10/31/2023 12:05:19 PM

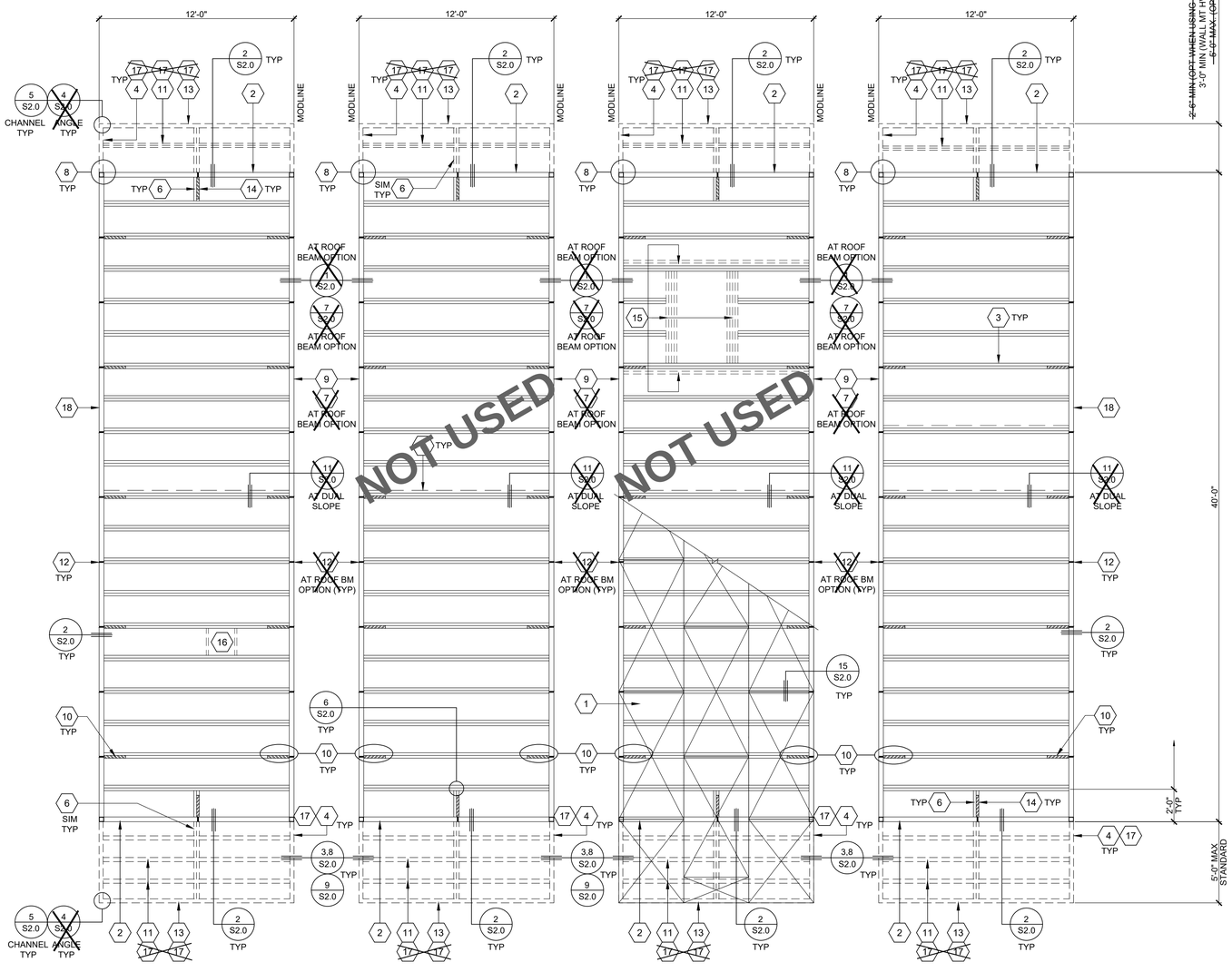


LEFT HAND MODULE | ~~TYPICAL CENTER MODULE~~ | ~~TYPICAL CENTER MODULE~~ | RIGHT HAND MODULE

## ROOF FRAMING PLAN (W/ PLYWOOD)

SCALE: 1/4" = 1'-0"

## KEY NOTES

1. ROOF SHEATHING: 7/16" MIN C-D EXPOSURE 1, STRUCTURAL 1, 24/16 SPAN RATING, PS 1-09, APA RATED OR EQUAL, SQUARE EDGE. ATTACH TO STEEL FRAMING WITH MIN #10-16 X 1 1/2" SELF TAP SCREWS, 0.145 MIN (BY BUILDEX, ICC REPORT # ESR-1976) @ 6" OC BOUNDARY & SUPPORTED EDGES AND 6" OC FIELD WHERE JOIST ARE AT 24" OC AND 12" OC FIELD AT JOISTS WITH SPACING LESS THAN 24" OC. MIN 24" SHEET DIMENSION. OPTIONAL: TOUNGE AND GROVE PLYWOOD.

   ALT ATTACHMENT: JAACO "NAILPRO" NP145S FASTENER 0.145Ø SHOT PIN PER ICC REPORT #ESR-2961. THIS ALTERNATE SHOT PIN ATTACHMENT CAN ONLY BE USED WHEN COLD FORMED STEEL IS OF STRUCTURAL GRADE 50, MIN Fy = 50,000 KSI.

   NON-COMBUSTILE ROOF OPTION: USE FIRE RETARDANT SHEATHING. SHEATHING SHALL BE EQUAL TO THE SAME THICKNESS, SPAN RATING, AND EXPOSURE RATING OF STANDARD PLYWOOD. FIRE RETARDANT SHEATHING SHALL BEAR THE STAMP APPROVAL OF UL OR APA FOR FIRE RETARDANT CERTIFICATION
2. 'C' SHAPE ROOF HEADER (SEE PROFILE BELOW)
3. 'Z' SHAPE ROOF JOIST (SEE PROFILE BELOW)
4. 'C' SHAPE OVERHANG OUTRIGGER, TYPICAL EACH SIDE (SEE PROFILE BELOW)
5. USE DOUBLE JOIST AT THIS LOCATION (MID-SPAN) FOR DUAL SLOPE ROOF ADDITIONAL JOIST SHOWN AS HIDDEN LINES USE SINGLE JOIST AT THIS LOCATION FOR MONO SLOPE ROOF
6. 'Z' SHAPE ROOF JOIST BLOCKING AT MID-SPAN OF HEADER, TYPICAL EACH END
7. OPTIONAL 'C' SHAPE ROOF BEAM AT MODLINE (SEE PROFILE BELOW)
8. STEEL CORNER STUB COLUMN
9. STEEL TRUSS (SEE ROOF TRUSS & DETAILS SHEET)
10. STEEL TRUSS BRACE AT BOTH TRUSS AND BEAM
11. 'Z' SHAPE OVERHANG JOIST (SEE PROFILE BELOW)
12. 1/4" FULL HEIGHT STIFFENER AT ROOF BEAM TYPICAL (SEE STRUCTURAL BLDG SECTION SHEET)
13. 'C' SHAPE OVERHANG FASCIA.
14. STEEL BRACE AT ROOF HEADER TYPICAL (SEE BUILDING SECTIONS)
15. OUTLINE OF TYPICAL A/C ROOF MOUNT FRAMING. SEE MECHANICAL PLANS FOR LOCATIONS. PROVIDE DOUBLE PURLINS AS SHOWN. SEE DETAIL #10/S2.0.
16. FOR SOLATUBE OPTION, SEE SHEET A11.0 FOR LOCATIONS AND DETAIL
17. ALT OVERHANG MEMBER AT FASCIA AND OUTRIGGER: L-5" X 3" X 3/8". SPACING OF ALT OVERHANG MEMBER AT 24" OC MAX
18. ROOF BEAM AT SIDEWALL. (SEE PROFILE BELOW)

### ROOF BEAM SCHEDULE

| | |
|---|---|
| ROOF SLOPE | |
| ~~DUAL~~ | ~~18"-23"-18" x 3 1/2" x 10 GA TAPERED SECTION CHANNEL~~ |
| MONO | 18"-28" x 3 1/2" x 10 GA TAPERED SECTION CHANNEL |

### ROOF HEADER SCHEDULE

| | |
|---|---|
| ROOF SLOPE | |
| ~~DUAL~~ | ~~18" x 3 1/2" x 12 GA CHANNEL (BOTH ENDS)~~ |
| MONO | 18" x 3 1/2" x 12 GA CHANNEL (LOW END)<br>28" x 3 1/2" x 12 GA CHANNEL (HIGH END) |

### ROOF JOIST SCHEDULE

| JOIST | SPACING |
|---|---|
| 6" x 2" x 14 GA Z-MEMBER | 24" OC MAX |

### MODLINE SCHEDULE

| TOP CHORD | BOTTOM CHORD | CHANNEL |
|---|---|---|
| SEE ROOF TRUSS SHEET | SEE ROOF TRUSS SHEET | N/A |
| N/A | N/A | 18" TO 28" CHANNEL |

### OVERHANG SCHEDULE

| STANDARD OVERHANG | | |
|---|---|---|
| JOIST | OUTRIGGER | FASCIA |
| Z-6" X 2" X 14 GA AT 24" MAX OC | C-12" X 3" X 12 GA | C-12" X 3" X 12 GA |
| ~~OPTIONAL OVERHANG~~ | | |
| ~~JOIST~~ | ~~OUTRIGGER~~ | ~~FASCIA~~ |
| ~~L-5" X 3" X 3/8" AT 24" MAX OC~~ | ~~L-5" X 3" X 3/8"~~ | ~~L-5" X 3" X 3/8"~~ |

## STRUCTURAL STEEL PROFILES

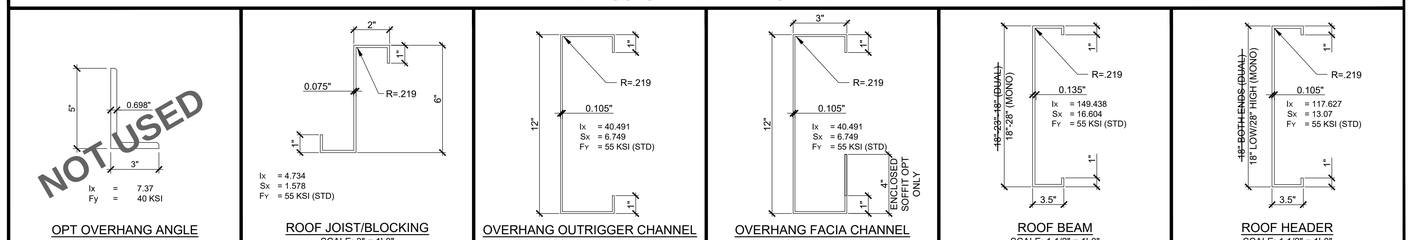


OPT OVERHANG ANGLE — SCALE: 3" = 1'-0"

ROOF JOIST/BLOCKING — SCALE: 3" = 1'-0"

OVERHANG OUTRIGGER CHANNEL — SCALE: 3" = 1'-0"

OVERHANG FACIA CHANNEL — SCALE: 3" = 1'-0"

ROOF BEAM — SCALE: 1 1/2" = 1'-0"

ROOF HEADER — SCALE: 1 1/2" = 1'-0"

STATE AGENCY APPROVAL

IDENTIFICATION STAMP
DIV. OF THE STATE ARCHITECT
APP. 04-124098 INC:
REVIEWED FOR
SS ☑ FLS ☑ ACS ☑
DATE: 11/14/24

SKC COMPANY
15345 FAIRFIELD RANCH ROAD, SUITE #160, CHINO, CA 91709
OFFICE: (909) 740-3120, FAX: (909) 726-9470
WEBSITE: WWW.SKCCOMPANY.COM
MANUFACTURER #MF1279666 DEALER # DL1279666
GC LIC # 992118 SBE CERTIFIED

ALL DESIGNS INDICATED ON THESE PLANS/DRAWINGS ARE PROPERTY OF SKC, INC AND ARE FOR THE USE BY SKC IN THE SPECIFIED JOB ONLY. THEY SHALL NOT BE USED AND/OR DUPLICATED OR TRANSMITTED IN ANY FORM, FOR ANY PURPOSE WITHOUT THE PRIOR WRITTEN CONSENT OF SKC, INC. ANY UNAUTHORIZED USE OF THESE PLANS SHALL SUBJECT THE OWNER OF SAID PROPERTY TO LIQUIDATED DAMAGES OF $75,000.00. THESE PLANS ARE PROTECTED UNDER THE PROVISIONS OF THE 1976 COPYRIGHT ACT COPYRIGHT SKC, © ALL RIGHTS RESERVED.

DISTRICT/CUSTOMER NAME:
NEXTMOD

SCHOOL/SITE NAME:
STOCKPILE

SHEET TITLE:

ROOF FRAMING PLAN
PLYWOOD SHEATHING
DIAPHRAGM

PRE-CHECK (PC) DOCUMENT
CODE: 2022 CBC
A SEPARATE PROJECT APPLICATION FOR CONSTRUCTION IS REQUIRED

APPROVED
DIV. OF THE STATE ARCHITECT
APP: 04-122454 PC
REVIEWED FOR
SS ☑ FLS ☑ ACS ☑ CG ☑
DATE: 11/14/2023

PROFESSIONAL OF RECORD ON PC

ORION
Structural Engineering, Inc.
11305 RANCHO BERNARDO RD
SUITE 121
SAN DIEGO CA, 92127
PHONE (858) 679-1974
REGISTERED PROFESSIONAL ENGINEER
RYAN J. OHR
C-62237
EXP. 12/31/24
STRUCTURAL
STATE OF CALIFORNIA

FIRM: Orion Structural Engineering, Inc.
ADDRESS: 11305 Rancho Bernardo Road Ste 121
CITY: San Diego, CA
PHONE: 858-679-1974

PROJECT SPECIFIC PROFESSIONAL OF RECORD

FIRM:
ADDRESS:
CITY:
PHONE:

REVISIONS
1 -
2 -
3 -
4 -
5 -

| | |
|---|---|
| PROJECT NO.: | 00-0000 |
| DRAFTER: | 00 |
| SCALE: | AS NOTED |
| DATE: | 00-00-00 |

SHEET NUMBER

S2.2

10/31/2023 12:05:33 PM

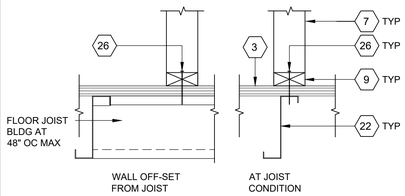


INTERIOR WALL AT FLOOR PARALLEL TO FLOOR JOIST

SCALE: 1 1/2" = 1'-0"

16

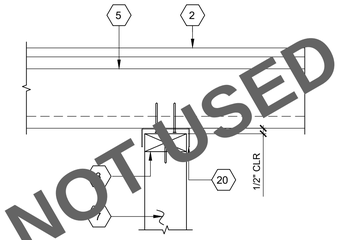


(ALT.) INTERIOR WALL ATTACHMENT PERPENDICULAR TO ROOF JOIST

SCALE: NTS

11

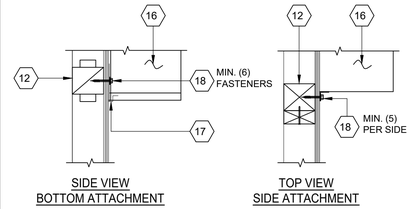


ATTACHMENT AT AC UNIT

SCALE: 1 1/2" = 1'-0"

6

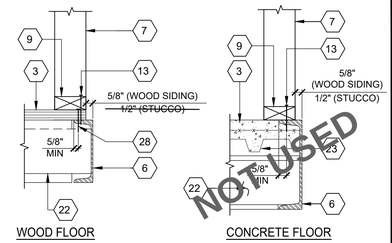


EXTERIOR WALL AT FLOOR

SCALE: 1 1/2" = 1'-0"

1

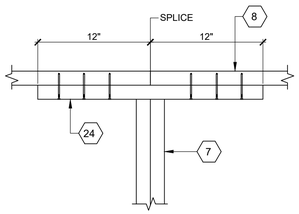


TOP PLATE SPLICE

SCALE: 1 1/2" = 1'-0"

17

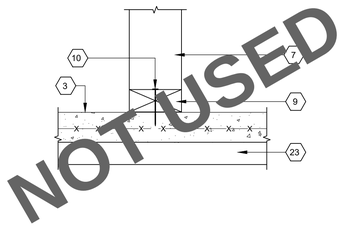


INTERIOR WALL TO CONCRETE FLOOR

SCALE: 3" = 1'-0"

12

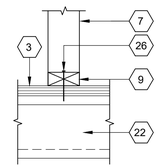


INTERIOR WALL AT FLOOR PERPENDICULAR TO FLOOR JOIST

SCALE: 1 1/2" = 1'-0"

7

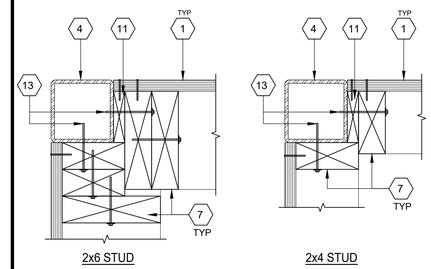


COLUMN AT CORNER

SCALE: 3" = 1'-0"

2

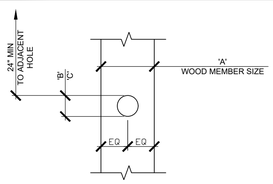


BORING SCHEDULE FOR WOOD STUDS

| | | | | | |
|---|---|---|---|---|---|
| A | SIZE | 2X4 | 2X6 | 2X8 | |
| B | EXT | | 2-3/16"Ø MAX | 2-7/8"Ø MAX | |
| C | INT | 2"Ø MAX | 3-1/4"Ø MAX | 4-3/8"Ø MAX | |

ALLOWABLE HOLE SIZES DETERMINED PER CBC SECTION 2308.5.9

WOOD STUD BORING DETAIL

SCALE: 3" = 1'-0"

18

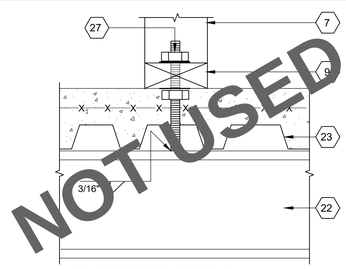


(ALT) INTERIOR WALL PERPENDICULAR TO FLOOR JOIST

SCALE: 3" = 1'-0"

13

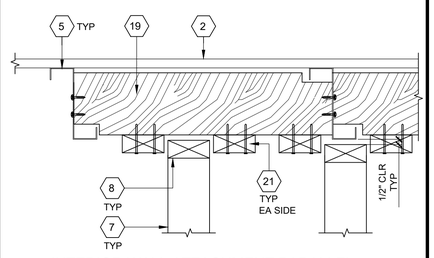


INTERIOR WALL ATTACHMENT PARALLEL TO ROOF JOIST

SCALE: NTS

8

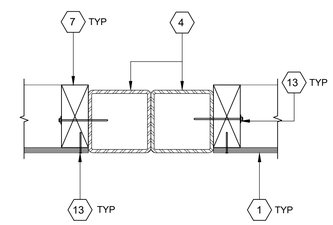


COLUMN AT MODLINE

SCALE: 3" = 1'-0"

3

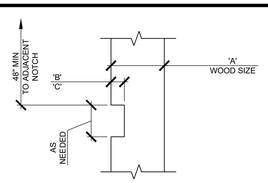


NOTCHING SCHEDULE FOR WOOD STUDS

| | | | | | |
|---|---|---|---|---|---|
| A | SIZE | 2X4 | 2X6 | 2X8 | |
| B | EXT | | 1-3/8" MAX | 1-13/16" MAX | |
| C | INT | 1-3/8" MAX | 2-3/16" MAX | 2-7/8" MAX | |

ALLOWABLE NOTCH SIZES DETERMINED PER SECTION CBC 2308.5.9

WOOD STUD NOTCHING DETAIL

SCALE: 3" = 1'-0"

19

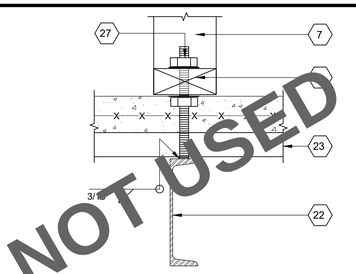


(ALT) INTERIOR WALL PARALLEL TO FLOOR JOIST

SCALE: 3" = 1'-0"

14

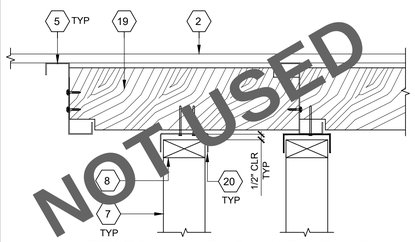


(ALT.) INTERIOR WALL ATTACHMENT PARALLEL TO ROOF JOIST

SCALE: NTS

9

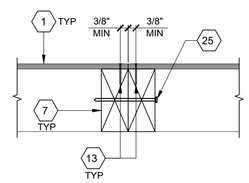


WALL AT PANEL JOINT

SCALE: 3" = 1'-0"

4

15

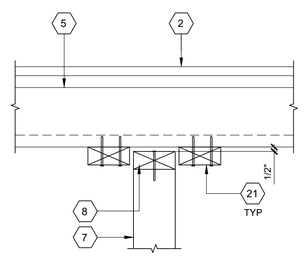


INTERIOR WALL ATTACHMENT PERPENDICULAR TO ROOF JOIST

SCALE: NTS

10

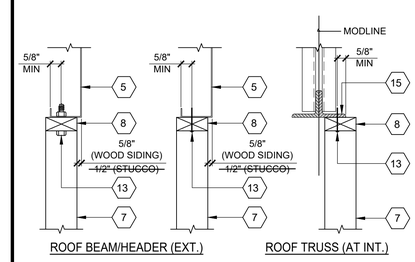


WALL AT ROOF

SCALE: 1 1/2" = 1'-0"

5

## KEY NOTES

1. EXTERIOR PLYWOOD SIDING/SHEATHING (SEE WALL FRAMING ELEVATION SHEET)
2. ROOF DIAPHRAGM (SEE STRUCTURAL ROOF FRAMING PLAN)
3. FLOOR SYSTEM (SEE FLOOR FRAMING SHEET)
4. STEEL COLUMN
5. STEEL ROOF JOIST (SEE STRUCTURAL ROOF FRAMING PLAN)
6. PERIMETER FLOOR FRAME (SEE STRUCTURAL FLOOR FRAMING PLAN)
7. 2x FULL HEIGHT STUDS
8. 2x TOP PLATE
9. 2x BOTTOM PLATE (PRESSURE TREATED @ CONCRETE FLOOR OPTION)
10. 'HILTI' X-U 62 0.157"Ø X 2-7/16" SHOT PIN AT 24" OC MAX
11. CONTINUOUS SPACER AS REQUIRED
12. 4x POST / BLOCKING. SEE WALL FRAMING ELEVATION SHEET
13. FASTENERS (SEE SCHEDULE ON WALL FRAMING ELEVATION SHEET)
14. NOT USED
15. TRUSS BOTTOM CHORD
16. WALL MOUNTED HEAT PUMP UNIT (SEE MECHANICAL PLANS)
17. 16 GA X 24" LONG STEEL BOTTOM BRACKET AT HVAC UNIT
18. 3/8"Ø X MIN 3-1/2" LAG BOLTS, QUANTITY INDICATED PER DETAIL #6/-
19. 2X6 BLOCKING AT 48" OC WITH (2) #12 X 1-1/2" WS EACH END OF BLOCKING, NOTCH AS REQUIRED
20. CONTINUOUS C-3 1/2" X 1 5/8" X 20 GA TRACK, SECURED TO MEMBERS W/(2) #12 SDS AT ROOF JOIST OR (2) 16D NAILS INTO 2X BLOCK TYP
21. CONTINUOUS 2X BLOCKING AT EACH SIDE OF TOP PLATE WITH (2) 16D NAILS TO EACH BLOCKING AT 48" OC OR (2) #12 SDS TO EACH JOIST TYPICAL
22. FLOOR JOIST MEMBER OR BLOCKING (SEE FLOOR FRAMING PLAN)
23. METAL FLOOR DECK
24. 2X BLOCK AT SPLICE LOCATION. SECURE 2x BLOCK WITH (6) 16d NAILS AT EACH SIDE.
25. 16D NAILS AT 24" OC AT DOUBLE STUDS
26. MIN #12 X 3" MIN SDS AT 16" OC MAX WHERE STEEL JOIST OCCURS. USE #12 X 3" MIN WOOD SCREW ELSEWHERE OR 16D NAILS OC MAX
27. 1/2"Ø THREADED ROD WELD TO FLOOR JOIST OR BLOCKING. FASTEN TO SILL PLATE WITH (2) NUTS AND (2) WASHERS @ 48" O.C. MAX
28. PLYWOOD FLOOR EDGE NAILING

## GENERAL NOTES

1. SEE WALL FRAMING ELEVATION SHEET S3.2 FOR NAILING SCHEDULE

STATE AGENCY APPROVAL

IDENTIFICATION STAMP
DIV. OF THE STATE ARCHITECT
APP. 04-124098 INC:
REVIEWED FOR
SS ☑ FLS ☑ ACS ☑
DATE: 11/14/24


SKC COMPANY
15345 FAIRFIELD RANCH ROAD, SUITE #160, CHINO, CA 91709
OFFICE: (909) 740-3120, FAX: (909) 726-9470
WEBSITE: WWW.SKCCOMPANY.COM
MANUFACTURER #MF1276656 DEALER # DL 1276656
GC LIC # 992118 SBE CERTIFIED



ALL DESIGNS INDICATED ON THESE PLANS/DRAWINGS ARE PROPERTY OF SKC, INC AND ARE FOR THE USE BY SKC IN THE SPECIFIED JOB ONLY. THEY SHALL NOT BE USED AND/OR DUPLICATED OR TRANSMITTED IN ANY FORM, FOR ANY PURPOSE WITHOUT THE PRIOR WRITTEN CONSENT OF SKC, INC. ANY UNAUTHORIZED USE OF THESE PLANS SHALL SUBJECT THE OWNER OF SAID PROPERTY TO LIQUIDATED DAMAGES OF $75,000.00. THESE PLANS ARE PROTECTED UNDER THE PROVISIONS OF THE 1976 COPYRIGHT ACT COPYRIGHT SKC, © ALL RIGHTS RESERVED.


DISTRICT/CUSTOMER NAME:
NEXTMOD

SCHOOL/SITE NAME:
STOCKPILE

SHEET TITLE:

WALL FRAMING DETAILS WOOD STUDS

PRE-CHECK (PC) DOCUMENT
CODE: 2022 CBC
A SEPARATE PROJECT APPLICATION FOR CONSTRUCTION IS REQUIRED

APPROVED
DIV. OF THE STATE ARCHITECT
APP: 04-122454 PC
REVIEWED FOR
SS ☑ FLS ☑ ACS ☑ CG ☑
DATE: 11/14/2023

PROFESSIONAL OF RECORD ON PC


ORION
Structural Engineering, Inc.
11305 RANCHO BERNARDO RD
SUITE 121
SAN DIEGO CA. 92127
PHONE (858) 679-1974
REGISTERED PROFESSIONAL ENGINEER
RYAN J. OLSEN
No. 6437
EXP. 12/31/24
STRUCTURAL
STATE OF CALIFORNIA

FIRM: Orion Structural Engineering, Inc.
ADDRESS: 11305 Rancho Bernardo Road Ste 121
CITY: San Diego, CA
PHONE: 858-679-1974


PROJECT SPECIFIC PROFESSIONAL OF RECORD

FIRM:
ADDRESS:
CITY:
PHONE:

REVISIONS

1 -
2 -
3 -
4 -
5 -

| | |
|---|---|
| PROJECT NO.: | 00-0000 |
| DRAFTER: | 00 |
| SCALE: | AS NOTED |
| DATE: | 00-00-00 |

SHEET NUMBER

S3.0

10/31/2023 12:05:47 PM

## WOOD STUD WALL FRAMING SCHEDULE

| EXTERIOR | GRADE | SIZE | SPACING | BLDG CORNER SPACING |
|---|---|---|---|---|
| WOOD SIDING | HF #2/DF #2 | SHEET A0.2 | 16" OC | 16" OC WITHIN 72" OF CORNER |
| ~~STUCCO~~ | ~~DF #2~~ | ~~SHEET A0.2~~ | ~~12" OC~~ | ~~8" OC WITHIN 72" OF CORNER~~ |

## WOOD STUD WALL OPENING SCHEDULE

| OPENING | | FULL HT/JAMB STUD | TRIMMER | HEADER | SILL | BLOCKING |
|---|---|---|---|---|---|---|
| WINDOWS | | | | | | |
| 8'x4' | ~~STUCCO~~ | ~~(6) EACH SIDE [**]~~ | ~~(1) EACH SIDE~~ | ~~(2) FLAT~~ | ~~(2) FLAT~~ | ~~-~~ |
| | WOOD | (3) EACH SIDE | (1) EACH SIDE | (2) FLAT | (2) FLAT | - |
| 8'x2' | ~~STUCCO~~ | ~~(5) EACH SIDE [**]~~ | ~~(1) EACH SIDE~~ | ~~(2) FLAT~~ | ~~(2) FLAT~~ | ~~-~~ |
| | WOOD | (3) EACH SIDE | (1) EACH SIDE | (2) FLAT | (2) FLAT | - |
| 6'x4' | ~~STUCCO~~ | ~~(5) EACH SIDE [**]~~ | ~~(1) EACH SIDE~~ | ~~(2) FLAT~~ | ~~(2) FLAT~~ | ~~-~~ |
| | WOOD | (3) EACH SIDE | (1) EACH SIDE | (2) FLAT | (2) FLAT | - |
| 4'x4' | ~~STUCCO~~ | ~~(3) EACH SIDE~~ | ~~(1) EACH SIDE~~ | ~~(2) FLAT~~ | ~~(2) FLAT~~ | ~~-~~ |
| | WOOD | (2) EACH SIDE | (1) EACH SIDE | (2) FLAT | (2) FLAT | - |
| DOORS | | | | | | |
| 3'x7' | ~~STUCCO~~ | ~~(3) EACH SIDE~~ | ~~(1) EACH SIDE~~ | ~~(2) FLAT~~ | ~~-~~ | ~~-~~ |
| | WOOD | (2) EACH SIDE | (1) EACH SIDE | (2) FLAT | - | - |
| 6'x7' | ~~STUCCO~~ | ~~(5) EACH SIDE [**]~~ | ~~(1) EACH SIDE~~ | ~~(2) FLAT~~ | ~~-~~ | ~~-~~ |
| | WOOD | (3) EACH SIDE | (1) EACH SIDE | (2) FLAT | - | - |
| AC | | | | | | |
| ALL | | (1) 4x4 POST EACH SIDE | - | (1) FLAT AT RETURN | (1) FLAT AT RETURN | 4x4 |

## WOOD STUD WALL FRAMING SCHEDULE

| TOP PLATE TO BTM BEAM OR TRUSS CHORD | BTM PLATE TO CHANNEL (CONC FLRS) | JAMB STUD TO COLUMN |
|---|---|---|
| 'HILT' X-U 0.157"Ø SHOT PIN AT 12" MAX OC PER ICC REPORT #ESR-2269<br><br>ALT: 1/2" MACHINE BOLTS AT 32" MAX OC OR MIN #12 SDS HWH AT 12" MAX OC | 'HILT' X-U 0.157"Ø SHOT PIN AT 12" MAX OC PER ICC REPORT #ESR-2269 ALT: #12 MIN SDS AT 14" MAX OC, 8" MAX OC AT CORNERS | 'HILTI' X-U 0.157"Ø SHOT PIN AT 24" MAX OC PER ICC REPORT # ESR-2269<br><br>ALT: #12 STSMS AT 24" MAX OC |
| | BTM PLATE TO PLYWOOD<br>MIN #12 (PLYWOOD FLRS)<br>~~#12 MIN~~ WOOD SCREWS AT 14" MAX OC, 8" MAX OC AT CORNERS | |

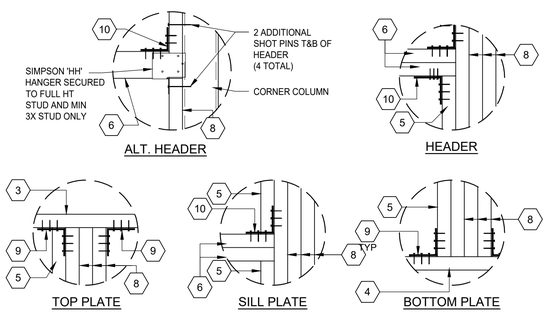


TYPICAL FRAMING ATTACHMENT DETAILS

SCALE: 1/4" = 1'-0"

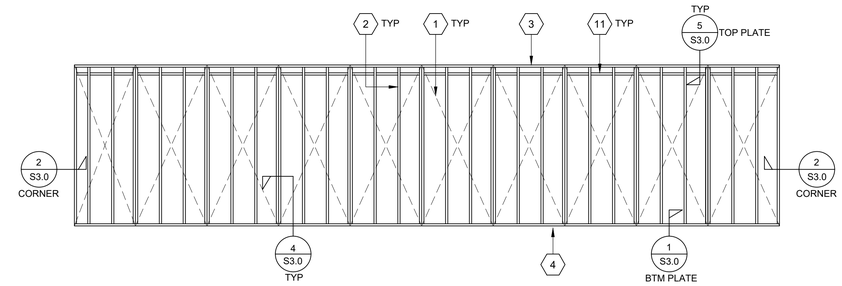


TYPICAL SIDEWALL FRAMING

SCALE: 1/4" = 1'-0"

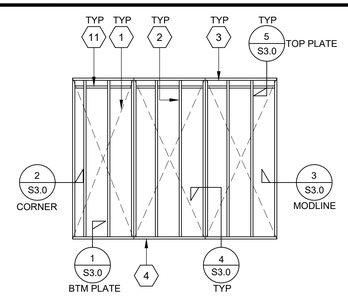


TYPICAL ENDWALL FRAMING

SCALE: 1/4" = 1'-0"

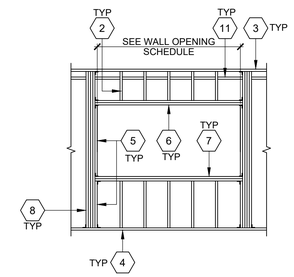


TYPICAL WINDOW FRAMING

SCALE: 1/4" = 1'-0"

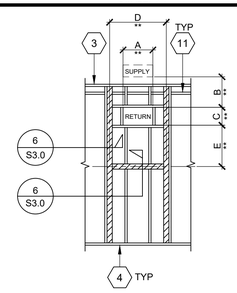


**VERIFY DIMENSIONS ACCORDING TO MANUFACTURES SPECS PER UNIT TYPE AND SIZE

HATCH = 4X FRAMING PER SCHEDULE SECURE 4X BLKG WITH (5) 10d NAILS TOP AND BOTTOM ALTERNATE: USE SIMPSON A34 CLIPS TOP AND BOTTOM (TYP)

TYPICAL WALL MOUNT HVAC FRAMING

SCALE: 1/4" = 1'-0"

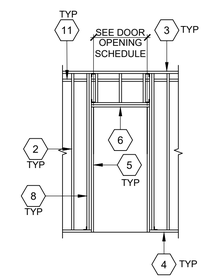


TYPICAL DOOR FRAMING

SCALE: 1/4" = 1'-0"

## KEY NOTES

1. EXTERIOR PLYWOOD SIDING (5/8" DURATEMP) OR (19/32") OSB WOOD STRUCTURAL PANEL.
   ~~ALT: 1/2" (15/32") CDX PLYWOOD SHEATHING (STUCCO)~~
   ~~TO WOOD STUDS USE HOT-DIPPED GALVANIZED 8d BOX NAILS AT 6" OC BOUNDARY & EDGES, AND 12" OC FIELD~~
2. 2x FULL HEIGHT STUDS
3. 2x TOP PLATE
4. 2x BOTTOM PLATE (PRESSURE WOOD TREATED @ CONCRETE FLOOR OPTION)
5. 2x STUD TRIMMER - TYPICAL AT OPENINGS
6. HEADER (SEE WALL OPENING SCHEDULE)
7. WINDOW SILL (SEE WALL OPENING SCHEDULE)
8. JAMB STUD (SEE WALL OPENING SCHEDULE)
9. 'SIMPSON' A35 CLIP AT OPENINGS GREATER THAN 48"
10. 'SIMPSON' A34 CLIP
11. FIRE BLOCKING AT CEILING LINE. SEE ARCHITECTURAL SHEET A2.0A FOR GENERAL NOTES

## FASTENING SCHEDULE

SCHEDULE BELOW ARE APPLICABLE METHODS TO THESE BUILDINGS.
REFER TO TABLE 2304.10.2 FOR FULL SCHEDULE

| DESCRIPTION OF BLDG ELEMENTS | NUMBER AND TYPE OF FASTENER | SPACING AND LOCATION |
|---|---|---|
| **WALL** | | |
| STUD TO STUD (NOT AT BRACED WALL PANELS) | 16D COMMON (3 1/2" X 0.162") | 24" OC FACE NAIL |
| | 10D BOX (3" X 0.128"); OR<br>3" X 0.131" NAILS OR<br>3-3" 14 GAGE STAPLES, 7/16" CROWN | 16" OC FACE NAIL |
| STUD TO STUD AND ABUTTING STUDS AT INTERSECTING WALL CORNERS (AT BRACED WALL PANELS) | 16D COMMON (3 1/2" X 0.162") OR | 24" OC FACE NAIL |
| | 16D COMMON (3 1/2" X 0.135"); OR | 24" OC FACE NAIL |
| | 3" X 0.131" NAILS OR<br>3-3" 14 GAGE STAPLES, 7/16" CROWN | 12" OC FACE NAIL |
| BUILT-UP HEADER (2" TO 2" HEADER) | 16D COMMON (3 1/2" X 0.162") | 16" OC FACE NAIL |
| | 16D COMMON (3 1/2" X 0.135") | 12" OC FACE NAIL |
| CONTINUOUS HEADER TO STUD | 4-8D COMMON (2 1/2" X 0.131"); OR | 12" OC FACE NAIL |
| | 4-10D BOX (3" X 0.128") | |
| TOP PLATE TO TOP PLATE | 16D COMMON (3 1/2" X 0.162"); OR | 16" OC FACE NAIL |
| | 10D BOX (3" X 0.128"); OR<br>3" X 0.131" NAILS OR<br>3" 14 GAGE STAPLES, 7/16" CROWN | 12" OC FACE NAIL |
| TOP PLATE TO TOP PLATE, AT END JOINTS | 8-16D COMMON (3 1/2" X 0.162"); OR<br>12-10D BOX (3" X 0.128"); OR<br>12-3" X 0.131" NAILS; OR<br>12-3" 14 GAGE STAPLES, 7/16" CROWN | EACH SIDE OF END JOINT, FACE NAIL (MINIMUM 24" LAP SPLICE LENGTH EACH SIDE OF END JOINT) |
| BOTTOM PLATE TO JOIST, RIM JOIST, BAND JOIST OR BLOCKING (NOT AT BRACED WALL PANELS) | 16D COMMON (3 1/2" X 0.162"); OR | 16" OC FACE NAIL |
| | 16D BOX (3" X 0.135"); OR<br>3" X 0.131" NAILS OR<br>3" 14 GAGE STAPLES, 7/16" CROWN | 12" OC FACE NAIL |
| BOTTOM PLATE TO JOIST, RIM JOIST, BAND JOIST OR BLOCKING AT BRACED WALL PANELS | 2-16D COMMON (3 1/2" X 0.162"); OR<br>3-16D BOX (3" X 0.135"); OR<br>4-3" X 0.131" NAILS; OR<br>3" 14 GAGE STAPLES, 7/16" CROWN | 12" OC FACE NAIL |
| STUD TO TOP OR BOTTOM PLATE | 4-8D COMMON (2 1/2" X 0.131"); OR<br>4-10D BOX (3" X 0.135"); OR<br>4-3" X 0.131" NAILS; OR<br>4-3" 14 GAGE STAPLES, 7/16" CROWN | TOENAIL |
| | 2-16D COMMON (3 1/2" X 0.162"); OR<br>3-10D BOX (3" X 0.128"); OR<br>3-3" X 0.131" NAILS; OR<br>3-3" 14 GAGE STAPLES, 7/16" CROWN | END NAIL |
| TOP OR BOTTOM PLATE TO STUD | 2-16D COMMON (3 1/2" X 0.162"); OR<br>3-10D BOX (3" X 0.135"); OR<br>3-3" X 0.131" NAILS; OR<br>3-3" 14 GAGE STAPLES, 7/16" CROWN | END NAIL |
| TOP PLATES, LAPS AT CORNERS AND INTERSECTIONS | 2-16D COMMON (3 1/2" X 0.162"); OR<br>3-10D BOX (3" X 0.135"); OR<br>3-3" X 0.131" NAILS; OR<br>3-3" 14 GAGE STAPLES, 7/16" CROWN | FACE NAIL |
| 1" BRACE TO EACH STUD AND PLATE | 2-8D COMMON (2 1/2" X 0.131"); OR<br>2-10D BOX (3" X 0.128"); OR<br>2-3" X 0.131" NAILS; OR<br>2-3" 14 GAGE STAPLES, 7/16" CROWN | FACE NAIL |
| 1" X 6" SHEATHING TO EACH BEARING | 2-8D COMMON (2 1/2" X 0.131"); OR<br>2-10D BOX (3" X 0.128") | FACE NAIL |
| 1" X 8" AND WIDER SHEATHING TO EACH BEARING | 3-8D COMMON (2 1/2" X 0.131"); OR<br>3-10D BOX (3" X 0.128") | FACE NAIL |
| **PANEL SIDING TO FRAMING** | | |
| 1/2" OR LESS | 6D CORROSION-RESISTANT SIDING (1 7/8" X 0.106"); OR<br>6D CORROSION-RESISTANT CASING (2" X 0.099") | 6" EDGES, 12" INTERMEDIATE SUPPORTS |
| 5/8" | 8D CORROSION-RESISTANT SIDING (2 3/8" X 0.128"); OR<br>8D CORROSION-RESISTANT CASING (2 1/2" X 0.113") | 6" EDGES, 12" INTERMEDIATE SUPPORTS |
| WOOD STRUCTURAL PANELS (WSP), SUBFLOOR, ROOF AND INTERIOR WALL SHEATHING TO FRAMING AND PARTICLE BOARD WALL SHEATHING TO FRAMING[a] | | |
| **INTERIOR PANELING** | | |
| 1/4" | 4D CASING (1 1/2" X 0.080"); OR<br>4D FINISH ( 1 1/2" X 0.072") | 6" EDGES, 12" INTERMEDIATE SUPPORTS |
| 3/8" | 6D CASING (2" X 0.099"); OR<br>6D FINISH (PANEL SUPPORTS AT 24") | 6" EDGES, 12" INTERMEDIATE SUPPORTS |

a. NAILS SPACED AT 6" AT INTERMEDIATE SUPPORTS WHERE SPANS ARE 48" OR MORE. FOR NAILING OF WOOD STRUCTURAL PANEL AND PARTICLE BOARD DIAPHRAGM AND SHEAR WALLS, REFER TO SECTION 2305. NAILS FOR WALL SHEATHING ARE PERMITTED TO BE COMMON, BOX OR CASING

STATE AGENCY APPROVAL

IDENTIFICATION STAMP
DIV. OF THE STATE ARCHITECT
APP. 04-124098 INC:
REVIEWED FOR
SS ☑ FLS ☑ ACS ☑
DATE: 11/14/24


SKC COMPANY
15345 FAIRFIELD RANCH ROAD, SUITE #160, CHINO, CA 91709
OFFICE: (909) 740-3120, FAX: (909) 726-9470
WEBSITE: WWW.SKCCOMPANY.COM
MANUFACTURER #MF1279666 DEALER # DL1279666
GC LIC # 992118 SBE CERTIFIED



ALL DESIGNS INDICATED ON THESE PLANS/DRAWINGS ARE PROPERTY OF SKC, INC AND ARE FOR THE USE BY SKC IN THE SPECIFIED JOB ONLY. THEY SHALL NOT BE USED AND/OR DUPLICATED OR TRANSMITTED IN ANY FORM, FOR ANY PURPOSE WITHOUT THE PRIOR WRITTEN CONSENT OF SKC, INC. ANY UNAUTHORIZED USE OF THESE PLANS SHALL SUBJECT THE OWNER OF SAID PROPERTY TO LIQUIDATED DAMAGES OF $75,000.00. THESE PLANS ARE PROTECTED UNDER THE PROVISIONS OF THE 1976 COPYRIGHT ACT COPYRIGHT SKC, © ALL RIGHTS RESERVED.


DISTRICT/CUSTOMER NAME:
NEXTMOD

SCHOOL/SITE NAME:
STOCKPILE

SHEET TITLE:

# WALL FRAMING ELEVATIONS

PRE-CHECK (PC) DOCUMENT
CODE: 2022 CBC
A SEPARATE PROJECT APPLICATION FOR CONSTRUCTION IS REQUIRED

APPROVED
DIV. OF THE STATE ARCHITECT
APP: 04-122454 PC
REVIEWED FOR
SS ☑ FLS ☑ ACS ☑ CG ☑
DATE: 11/14/2023

PROFESSIONAL OF RECORD ON PC


ORION
Structural Engineering, Inc.
11305 RANCHO BERNARDO RD
SUITE 121
SAN DIEGO CA, 92127
PHONE (858) 679-1974


FIRM: Orion Structural Engineering, Inc.
ADDRESS: 11305 Rancho Bernardo Road Ste 121
CITY: San Diego, CA
PHONE: 858-679-1974

PROJECT SPECIFIC PROFESSIONAL OF RECORD

FIRM:
ADDRESS:
CITY:
PHONE:

REVISIONS

1 -
2 -
3 -
4 -
5 -

| | |
|---|---|
| PROJECT NO.: | 00-0000 |
| DRAFTER: | 00 |
| SCALE: | AS NOTED |
| DATE: | 00-00-00 |

SHEET NUMBER

# S3.2

10/31/2023 12:06:02 PM

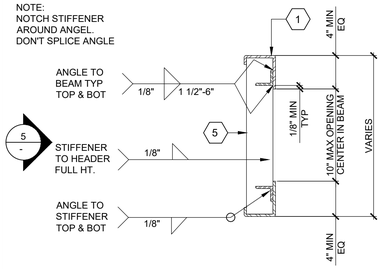


OPENING IN BEAM SECTION

SCALE: 1 1/2" = 1'-0"

11

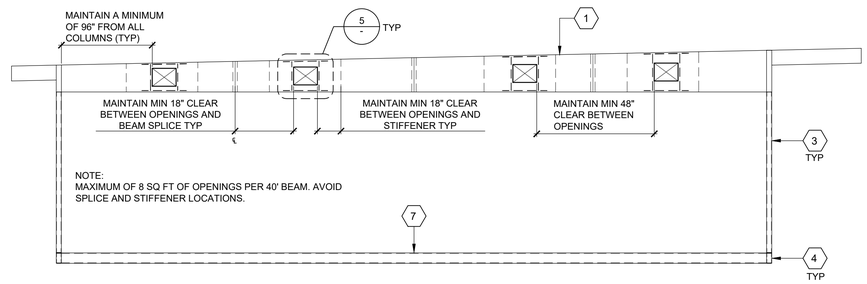


REINFORCED BEAM PENETRATIONS (MONO SLOPE)

6

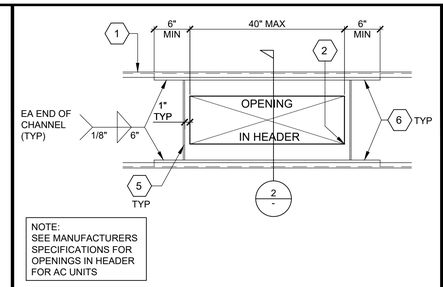


REINFORCED PENETRATIONS IN HEADER

SCALE: 1" = 1'-0"

1

## KEY NOTES

1. ROOF HEADER/BEAM (SEE ROOF STRUCTURAL FRAMING PLAN)
2. CUT CORNERS WITH 1/4" RADIUS
3. COLUMN (SEE STRUCTURAL BUILDING SECTION SHEETS)
4. STUB COLUMN (SEE STRUCTURAL BUILDING SECTION SHEETS)
5. 1/4" STIFFENER PLATE
6. C-3 1/4" X 1" X 10 GA CHANNEL TOP AND BOTTOM
7. PERIMETER FLOOR BEAM (SEE STRUCTURAL FLOOR FRAMING SHEETS)
8. L-2" X 2" X 1/4" ANGLE TOP AND BOTTOM

12

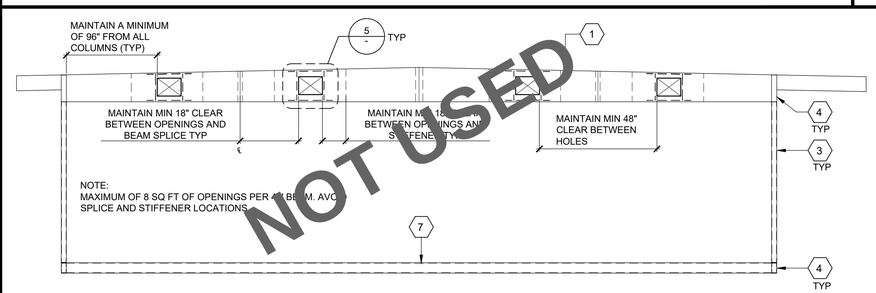


REINFORCED BEAM PENETRATIONS (DUAL SLOPE)

7

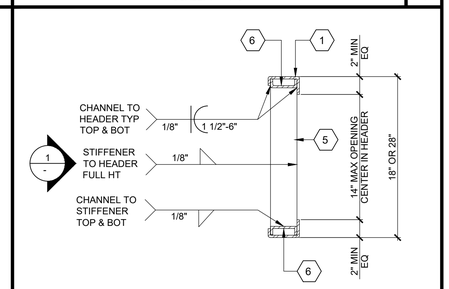


OPENING IN HEADER SECTION

SCALE: 1 1/2" = 1'-0"

2

13

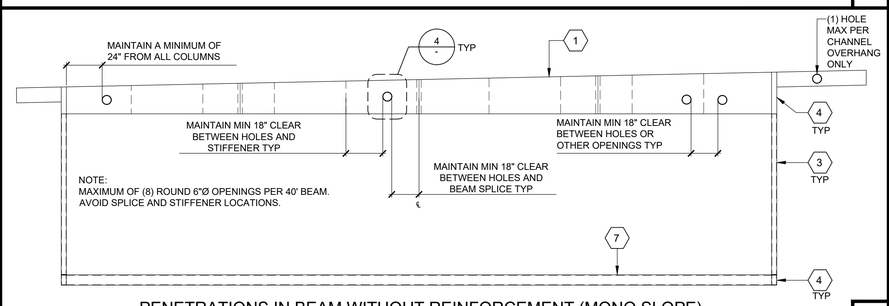


PENETRATIONS IN BEAM WITHOUT REINFORCEMENT (MONO SLOPE)

8

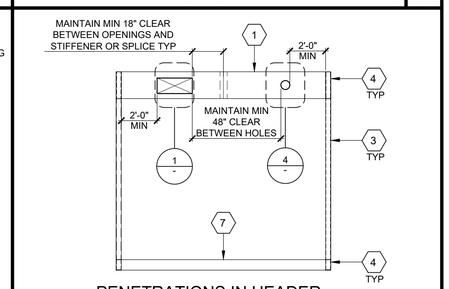


PENETRATIONS IN HEADER (REINFORCED & NON REINFORCED)

3

14

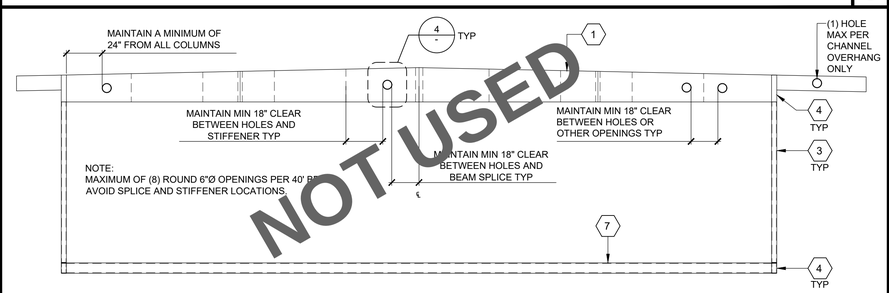


PENETRATIONS IN BEAM WITHOUT REINFORCEMENT (DUAL SLOPE)

9

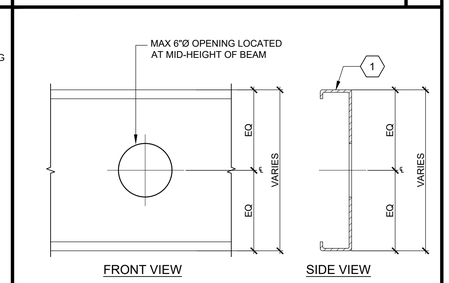


NON REINFORCED PENETRATIONS IN HEADER/BEAM

4

15

10

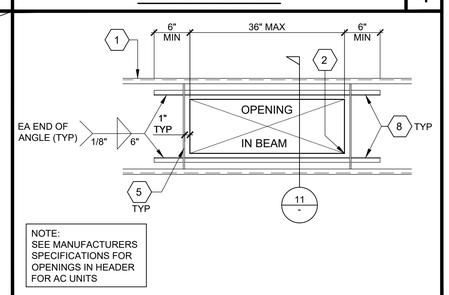


REINFORCED PENETRATIONS IN BEAM

SCALE: 1" = 1'-0"

5

STATE AGENCY APPROVAL

IDENTIFICATION STAMP
DIV. OF THE STATE ARCHITECT
APP. 04-124098 INC:
REVIEWED FOR
SS ☑ FLS ☑ ACS ☑
DATE: 11/14/24

SKC COMPANY
15345 FAIRFIELD RANCH ROAD, SUITE #160, CHINO, CA 91709
OFFICE: (909) 740-3120, FAX: (909) 726-9470
WEBSITE: WWW.SKCCOMPANY.COM
MANUFACTURER #MF1279666 DEALER # DL1279666
GC LIC # 992118 SBE CERTIFIED

ALL DESIGNS INDICATED ON THESE PLANS/DRAWINGS ARE PROPERTY OF SKC, INC AND ARE FOR THE USE BY SKC IN THE SPECIFIED JOB ONLY. THEY SHALL NOT BE USED AND/OR DUPLICATED OR TRANSMITTED IN ANY FORM, FOR ANY PURPOSE WITHOUT THE PRIOR WRITTEN CONSENT OF SKC, INC. ANY UNAUTHORIZED USE OF THESE PLANS SHALL SUBJECT THE OWNER OF SAID PROPERTY TO LIQUIDATED DAMAGES OF $75,000.00. THESE PLANS ARE PROTECTED UNDER THE PROVISIONS OF THE 1976 COPYRIGHT ACT COPYRIGHT SKC, © ALL RIGHTS RESERVED.

DISTRICT/CUSTOMER NAME:
NEXTMOD

SCHOOL/SITE NAME:
STOCKPILE

SHEET TITLE:

ALLOWABLE BEAM AND HEADER PENETRATIONS

PRE-CHECK (PC) DOCUMENT
CODE: 2022 CBC
A SEPARATE PROJECT APPLICATION FOR CONSTRUCTION IS REQUIRED

APPROVED
DIV. OF THE STATE ARCHITECT
APP: 04-122454 PC
REVIEWED FOR
SS ☑ FLS ☑ ACS ☑ CG ☑
DATE: 11/14/2023

PROFESSIONAL OF RECORD ON PC

ORION
Structural Engineering, Inc.
11305 RANCHO BERNARDO RD
SUITE 121
SAN DIEGO CA 92127
PHONE: (858) 679-1974

REGISTERED PROFESSIONAL ENGINEER
RYAN J. OLSEN
EXP. 12/31/24
STRUCTURAL
STATE OF CALIFORNIA

FIRM: Orion Structural Engineering, Inc.
ADDRESS: 11305 Rancho Bernardo Road Ste 121
CITY: San Diego, CA
PHONE: 858-679-1974

PROJECT SPECIFIC PROFESSIONAL OF RECORD

FIRM:
ADDRESS:
CITY:
PHONE:

REVISIONS

1 -
2 -
3 -
4 -
5 -

| | |
|---|---|
| PROJECT NO.: | 00-0000 |
| DRAFTER: | 00 |
| SCALE: | AS NOTED |
| DATE: | 00-00-00 |

SHEET NUMBER

S4.0

10/31/2023 12:06:23 PM

ENERGY CODE TABLE 140.4-E
AIR ECONOMIZER HIGH LIMIT SHUT OFF CONTROL REQUIREMENTS

| DEVICE TYPE | CLIMATE ZONES | REQUIRED HIGH LIMIT (ECONOMIZER OFF WHEN): | |
|---|---|---|---|
| | | EQUATION | DESCRIPTION |
| FIXED DRY BULB | 1,3,5, 11-16 | $T_{OA}$ > 75°F | OUTDOOR AIR TEMPERATURE EXCEED 75°F |
| | 2,4,10 | $T_{OA}$ > 73°F | OUTDOOR AIR TEMPERATURE EXCEED 73°F |
| | 6,8,9 | $T_{OA}$ > 71°F | OUTDOOR AIR TEMPERATURE EXCEED 71°F |
| | 7 | $T_{OA}$ > 69°F | OUTDOOR AIR TEMPERATURE EXCEED 69°F |
| DIFFERENTIAL DRY BULB | 1,3,5, 11-16 | $T_{OA}$ > $T_{RA}$ °F | OUTDOOR AIR TEMPERATURE EXCEEDS RETURN AIR TEMPERATURE |
| | 2,4,10 | $T_{OA}$ > $T_{RA}$ -2°F | OUTDOOR AIR TEMPERATURE EXCEEDS RETURN AIR TEMPERATURE MINUS 2° F |
| | 6,8,9 | $T_{OA}$ > $T_{RA}$ -4°F | OUTDOOR AIR TEMPERATURE EXCEEDS RETURN AIR TEMPERATURE MINUS 4° F |
| | 7 | $T_{OA}$ > $T_{RA}$ -6°F | OUTDOOR AIR TEMPERATURE EXCEEDS RETURN AIR TEMPERATURE MINUS 6° F |
| FIXED ENTHALPY + FIXED DRY BULB | ALL | $H_{OA}$ > 28 BTU/LB° OR $T_{OA}$ > 75°F | OUTDOOR AIR ENTHALPY EXCEEDS 28 BTU/LB OF DRY AIR OR OUTDOOR AIR TEMPERATURE EXCEED 75°F |

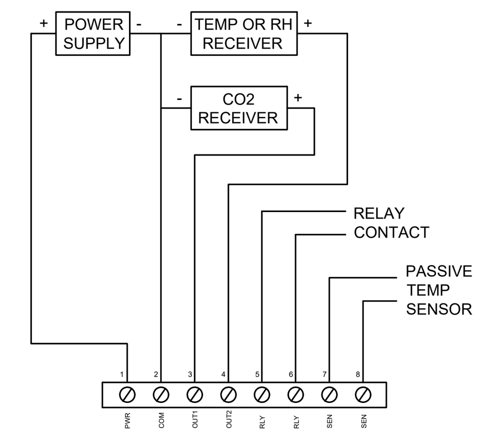


CO2 SENSOR WIRING DIAGRAM
SCALE: NTS
3

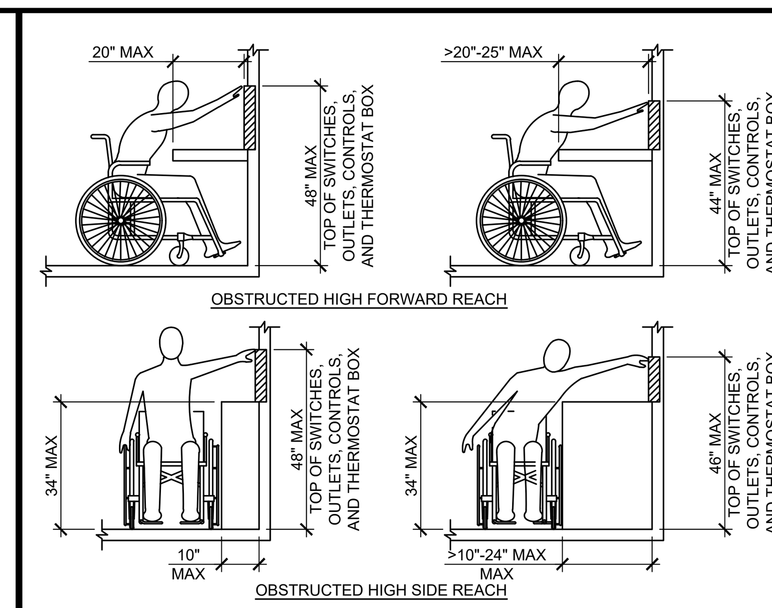


NOTE:
FORWARD OR FRONT APPROACH FOR DEVICES MOUNTED ABOVE COUNTER ASSUMES THAT DIRECTLY BELOW THE DEVICE THE COUNTER HAS A 30" MIN WIDTH x 27" MINIMUM HIGH X A DEPTH AS DEEP AS THE DEVICE FROM COUNTER FRONT UP TO 25" MAX. CBC SECTIONS 11B-306 &11B-308.

OBSTRUCTED MOUNTING HEIGHT DETAIL
SCALE: 3/8" = 1'-0"
2

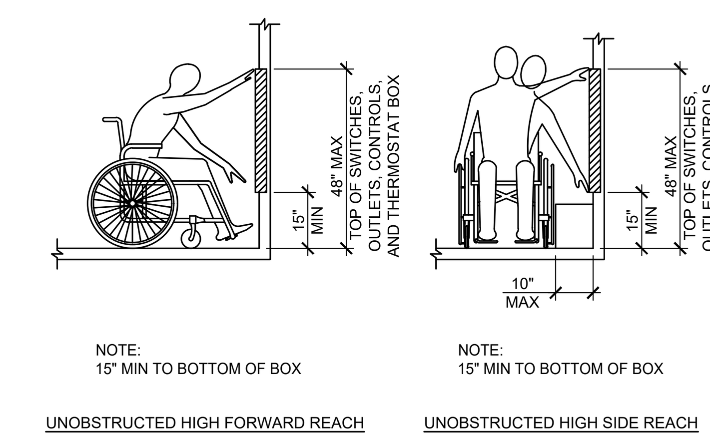


NOTE:
15" MIN TO BOTTOM OF BOX

NOTE:
15" MIN TO BOTTOM OF BOX

UNOBSTRUCTED HIGH FORWARD REACH

UNOBSTRUCTED HIGH SIDE REACH

UNOBSTRUCTED MOUNTING HEIGHT DETAIL
SCALE: 3/8" = 1'-0"
1

## GENERAL NOTES:

1. PER THE CALIFORNIA ENERGY CODE (CEC) CLASSROOMS ARE DESIGNED FOR MINIMUM OUTSIDE AIR OF 0.38 CFM PER SF OR TO 15 CFM PER OCCUPANT. WHICHEVER IS GREATER. PC MANUFACTURER SHALL VERIFY WITH THE SCHOOL DISTRICT TO EXPECTED NUMBER OF OCCUPANTS IN THE CLASSROOM SO THAT THE OUTDOOR VENTILATION RATE FOR MECHANICAL SYSTEMS CAN BE ADEQUATELY ADJUSTED UPON INSTALLATION OF THE BUILDING. PC MANUFACTURER SHALL ALSO CONFIRM WITH HVAC EQUIPMENT MANUFACTURER THAT THE SELECTED EQUIPMENT WILL BE ABLE TO PERFORM TO ACCOMMODATE THE ADDITIONAL OUTDOOR AIR REQUIREMENTS UNDER PEAK DESIGN CONDITIONS FOR THE CLIMATE ZONE IN WHICH THE BUILDING IS LOCATED. AT OCCUPANCY, THE BUILDING MANUFACTURER SHALL PROVIDE TO BUILDING OWNER A DESCRIPTION OF THE QUANTITIES OF OUTDOOR AND RE-CIRCULATED AIR THAT THE VENTILATION SYSTEMS ARE DESIGNED TO PROVIDE TO EACH AREA.
2. THE HVAC VARIATION CHARTS ON SHEET M5.0 ARE DESIGNED WITH THE HEAT PUMP MODEL THAT WAS DEMONSTRATED WITH THE WORST CASE BUILDING CONDITION, LISTED ON THE PC OPTIONS, AT THE (3) WORST CLIMATE ZONES IN CALIFORNIA. FOR SITE-SPECIFIC APPLICATION, IF MODIFICATIONS TO THE BUILDING AFFECT ENERGY CODE COMPLIANCE ARE DESIRED, A REVISED BUILDING ENERGY ANALYSIS REPORT SHALL BE SUBMITTED TO DSA AT THE TIME OF THE SITE SUBMITTAL APPROVAL APPOINTMENT PER DSA PR 18-02
3. THE HEAT PUMP EQUIPMENTS LISTED ON THIS PC DOES NOT INCLUDE SUPPLEMENTAL HEATING
4. THERMOSTAT SHALL BE PROGRAMMED WHEN A MODULAR BUILDING IS PLACED ON SITE TO ENSURE THE MINIMUM AIR RATE WILL BE SUPPLIED TO THE SPACE AT ALL USUALLY OCCUPIED TIMES AND PROGRAMMED TO PROVIDE A PRE-OCCUPANCY PURGE ONE HOUR PRIOR TO THE MODULAR BUILDING BEING NORMALLY OCCUPIED PER ENERGY CODE SECTION 120.1(d)1
5. HEAT PUMPS USING SUPPLEMENTARY ELECTRIC RESISTANCE HEATING MUST USE A THERMOSTAT DESIGNED FOR HEAT PUMPS PER SECTION 110.2(b). THERMOSTAT SHALL BE PROGRAMMED TO PREVENT SUPPLEMENTARY HEATER OPERATION WHEN THE HEATING LOAD CAN BE MET BY THE HEAT PUMP ALONE. THE CUT-ON TEMPERATURE FOR SUPPLEMENTARY HEATING, AND THE CUT-OFF TEMPERATURE FOR COMPRESSION HEATING MUST BE HIGHER THAN THE CUT-OFF TEMPERATURE FOR SUPPLEMENTARY HEATING
6. SEE SHEET A0.6 FOR CALGREEN REQUIREMENTS PERTAINING TO THE HVAC REQUIREMENTS OF THIS PC
7. CO2 SENSORS ARE NOT REQUIRED IN OFFICE USE
8. ACCEPTANCE TESTS SHALL BE COMPLETED ON NEWLY INSTALLED OR REPLACEMENT OF MECHANICAL SYSTEMS BEFORE PROJECT COMPLETION PER THE CALIFORNIA ENERGY CODE SECTION 10-103. ACCEPTANCE TEST MUST BE PERFORMED BY A CERTIFIED ACCEPTANCE TEST TECHNICIAN (ATT). THE ACCEPTANCE TESTING PROCEDURES MUST BE REPEATED, AND DEFICIENCIES CORRECTED UNTIL THE INSTALLATION OF THE SPECIFIED SYSTEMS CONFORM AND PASS THE REQUIRED ACCEPTANCE CRITERIA. COMPLETED NRCA FORMS SHALL BE SUBMITTED TO THE PROJECT INSPECTOR AND THE DISTRICT
9. NOT USED
10. ALL ECONOMIZERS MUST BE PROGRAMMED IN THE FIELD BY THE HVAC CONTRACTOR TO THE TEMPERATURE IN TABLE 140.4-E (SAMPLE TABLE SHOWN ON THIS SHEET)

## WALL MOUNT EQUIPMENT SCHEDULE

SEE GENERAL NOTE #2

**NOT USED**

HP 1 (2.5 TON)
BARD: W30HY-A05YN4XXX WALL MOUNTED HEAT PUMP
29,000 BTUH COOLING, EER = 11.0
26,600 BTUH HEATING, COP = 3.4
950 CFM @ .15 MAX ESP, WT = 350 LBS
208/230V-1PH-60CY, MCA = 50, MOP = [illegible], RLA = 9.6/11.3, FLA = 14.4/16.95
(WITH 5KW HEATER STRIP OPT (PREFIX "05")
2" MERV 13 FILTER (PREFIX "N")
ECONOMIZER (PREFIX "Y") USE ECON-DB5 KIT INCLUDES
JADE CONTROLLER BY HONEYWELL W7220
AND TEMPERATURE SENSORS
(INTERNALLY MOUNTED BEHIND SERVICE DOOR) &
'DWYER' SERIES CDTR WALL MOUNT CO2 SENSOR.
SENSOR SHALL HAVE A DISPLAY SHOWING PPM

**NOT USED**

HP 2 (3 TON)
BARD: W36HY-A05YN4XXX WALL MOUNTED HEAT PUMP
36,000 BTUH COOLING, EER = 11.1
33,000 BTUH HEATING, COP = [illegible]
1150 CFM @ .15 MAX ESP, WT = [illegible] LBS
208/230V-1PH-60CY, MCA = [illegible]0, MOP = 60, RLA = 12.4/14.1, FLA = 18.15/21.15
(WITH 5KW HEATER STRIP (PREFIX "05")
2" MERV 13 FILTER (PREFIX "N")
ECONOMIZER (PREFIX "Y") USE ECON-DB5 KIT INCLUDES
JADE CONTROLLER BY HONEYWELL W7220
AND TEMPERATURE SENSORS
(INTERNALLY MOUNTED BEHIND SERVICE DOOR) &
'DWYER' SERIES CDTR WALL MOUNT CO2 SENSOR.
SENSOR SHALL HAVE A DISPLAY SHOWING PPM

HP 3 (3.5 TON)
BARD: W42HY-A05YN4XXX WALL MOUNTED HEAT PUMP
42,000 BTUH COOLING, EER = 11.0
39,000 BTUH HEATING, COP = 3.3
1350 CFM @ .15 MAX ESP, WT = 500 LBS
208/230V-1PH-60CY, MCA = 60, MOP = 60, RLA = 17.2/19.3, FLA = 25.8/28.95
(WITH 5KW HEATER STRIP (PREFIX "05")
2" MERV 13 FILTER (PREFIX "N")
ECONOMIZER (PREFIX "Y") USE ECON-DB5 KIT INCLUDES
JADE CONTROLLER BY HONEYWELL W7220
AND TEMPERATURE SENSORS
(INTERNALLY MOUNTED BEHIND SERVICE DOOR) &
'DWYER' SERIES ~~CDTR WALL MOUNT CO2 SENSOR~~. CDT-2N40-LCD-S WALL MOUNT CO2 SENSOR.
SENSOR SHALL HAVE A DISPLAY SHOWING PPM

**NOT USED**

HP 5 (5 TON)
BARD: W60HY-A05YN4XXX WALL MOUNTED HEAT PUMP
54,500 BTUH COOLING, EER = 11.0
52,500 BTUH HEATING, COP = 3.3
1750 CFM @ .20 MAX ESP, WT = 515 LBS
208/230V-1PH-60CY, MCA = 70, MOP = 7[illegible], RLA = 25.7/30.5, FLA = 38.55/45.75
(WITH 5KW HEATER STRIP (PREFIX "05")
2" MERV 13 FILTER (PREFIX "N")
ECONOMIZER (PREFIX "Y") USE ECON-DB5 KIT INCLUDES
JADE CONTROLLER BY HONEYWELL W7220
AND TEMPERATURE SENSORS
(INTERNALLY MOUNTED BEHIND SERVICE DOOR) &
'DWYER' SERIES CDTR WALL MOUNT CO2 SENSOR.
SENSOR SHALL HAVE A DISPLAY SHOWING PPM

## ROOF MOUNT EQUIPMENT SCHEDULE

SEE GENERAL NOTE #2

**NOT USED**

HP 1A (3 TON)
CARRIER: 50FCQA04E1A3-0B0A0 ROOF MOUNTED HEAT PUMP
36,200 BTUH COOLING, SEER/EER = 14.3/11.8
34,000 BTUH HEATING, HSPF = 8.2
1500 CFM , WT = 467 LBS
208/230V-1PH-60CY, MCA = 50, MOP = [illegible], RLA = [illegible]/4.4, FLA = 15.9/18.3
(WITH 4.4 KW HEATER STRIP OPT (CRHEATER[illegible]3A00)
USE FACTORY ROOF CURB MODEL #CRRFCURB001A01 (14"), 115 LBS OR EQ.
TEMPERATURE ECONOMIZER (PREFIX "B") WITH
BAROMETRIC RELIEF DAMPER. JADE CONTROLLER
BY HONEYWELL W7220 CONTROLLER WITH
HONEYWELL C7660 TEMP SENSOR AND HONEYWELL
C7232A CO2 SENSOR. SENSOR SHALL HAVE A
DISPLAY SHOWING PPM

NOTES:
1. UNIT SHALL BE EQUIPPED WITH BOTH SUPPLY AND RETURN DUCT SMOKE DETECTORS (PREFIX "D") WHEN AIR MOVING SYSTEM SUPPLYING AIR IN EXCESS OF 2000 CFM AND GREATER PER CMC 609.1. CONNECTION TO THE FIRE ALARM SYSTEM BY DISTRICT

## EXHAUST FAN EQUIPMENT SCHEDULE

**NOT USED**

EF 1 -BROAN:
MODEL #A110 INVENT SERIES -CEILING EXHAUST FAN
110 CFM, 120V-1PH-60 HZ, 47.3 WATTS. WT = 22.8 LBS
INTERCONNECT WITH LIGHT SWITCH & LIGHT UNO
USE BROAN ROOF CAP #634
PROVIDE EXHAUST DUCT THRU ROOF
FOR SPACES LESS THAN 1[illegible] SF

EF 2 - BROAN:
MODEL #L200 CEILING EXHAUST FAN
200 CFM, 120V-1PH-60 HZ, 127 WATTS. WT = 23.0 LBS
INTERCONNECT WITH LIGHT SWITCH & LIGHT UNO
USE BROAN ROOF CAP #634
PROVIDE EXHAUST DUCT THRU ROOF
FOR SPACES BETWEEN 100-175 SF

EF 3 - BROAN:
MODEL #L300 CEILING EXHAUST FAN
300 CFM, 120V-1PH-60 HZ, 212 WATTS. WT = 23.1 LBS
INTERCONNECT WITH LIGHT SWITCH & LIGHT UNO
USE BROAN ROOF CAP #634
PROVIDE EXHAUST DUCT THRU ROOF
FOR SPACES BETWEEN 175-250 SF

## MATERIAL SCHEDULE

SUPPLY AIR PLENUM: GALV IRON SHEETS WITH 1/2" LINER INSULATION

INTERIOR DUCTWORK: FLEX DUCT CLASS 1 UL-181 WITH R-8 INSULATION

METAL DUCTWORK LINER: UL-181 R4.2 MIN

REGISTER BOXES: GALV IRON SHEETS WITH 1/2" LINER INSULATION

SUPPLY AIR REGISTERS: TRUAIRE '2004CD' SERIES OR APPROVED EQUAL

RETURN AIR GRILLES: METALAIRE 'RH' SERIES OR APPROVED EQUAL

THERMOSTAT: EMERSON '1F95-1277' (SEE GENERAL NOTE #4)

FLAME SPREAD LESS THAN 25 SMOKE DEVELOPED RATING LESS THAN 50

## LEGEND AND ABBREVIATIONS

| | |
|---|---|
| FLEXIBLE DUCT | DIRECTIONAL AIR FLOW |
| 12" — NUMBER INDICATES DUCT SIZE | UCD — UNDERCUT DOOR |
| ROUND/SPIRAL DUCT | DUCT REDUCER |
| TEE DUCT TRANSITION | WYE DUCT |
| ELBOW DUCT | ROUND DIFFUSER (OPT AT GYP CEILING) |
| 24x24 CEILING RETURN REGISTER | T — TOP OF THERMOSTAT +48" AFF |
| | CO2 — TOP OF CO2 SENSOR +36" THRU +72" AFF |
| 24x24 CEILING SUPPLY REGISTER | DAMPER |
| EXHAUST FAN | EQUIPMENT CALLOUT: TOP = EQUIPMENT TYPE BOTTOM = IDENTIFICATION |
| FIRE SMOKE DAMPER 'POTTORF': FSD-125R | E — ELECTRICAL LOCATION (PROVIDE WP BOX) |
| COMBINATION SMOKE FIRE DAMPER 'POTTORF': FSD-141 | G — GAS LOCATION |
| | RAG — RETURN AIR GRILL |
| CD — CONDENSATE DRAIN | RL — RIDGE LINE |

STATE AGENCY APPROVAL

IDENTIFICATION STAMP
DIV. OF THE STATE ARCHITECT
APP. 04-124098 INC:
REVIEWED FOR
SS ☑ FLS ☑ ACS ☑
DATE: 11/14/24


SKC COMPANY
15345 FAIRFIELD RANCH ROAD, SUITE #160, CHINO, CA 91709
OFFICE: (909) 740-3120, FAX: (909) 726-9470
WEBSITE: WWW.SKCCOMPANY.COM
MANUFACTURER #MF1279666 DEALER # DL1279666
GC LIC # 992118 SBE CERTIFIED



ALL DESIGNS INDICATED ON THESE PLANS/DRAWINGS ARE PROPERTY OF SKC, INC AND ARE FOR THE USE BY SKC IN THE SPECIFIED JOB ONLY. THEY SHALL NOT BE USED AND/OR DUPLICATED OR TRANSMITTED IN ANY FORM, FOR ANY PURPOSE WITHOUT THE PRIOR WRITTEN CONSENT OF SKC, INC. ANY UNAUTHORIZED USE OF THESE PLANS SHALL SUBJECT THE OWNER OF SAID PROPERTY TO LIQUIDATED DAMAGES OF $75,000.00. THESE PLANS ARE PROTECTED UNDER THE PROVISIONS OF THE 1976 COPYRIGHT ACT COPYRIGHT SKC, © ALL RIGHTS RESERVED.


DISTRICT/CUSTOMER NAME:
NEXTMOD

SCHOOL/SITE NAME:
STOCKPILE

SHEET TITLE:
MECHANICAL SCHEDULES AND NOTES

PRE-CHECK (PC) DOCUMENT
CODE: 2022 CBC
A SEPARATE PROJECT APPLICATION FOR CONSTRUCTION IS REQUIRED

~~APPROVED
DIV. OF THE STATE ARCHITECT
APP: 04-122454 PC
REVIEWED FOR
SS ☑ FLS ☑ ACS ☑ CG ☑
DATE: 11/14/2023~~

PROFESSIONAL OF RECORD ON PC


ORION
Structural Engineering, Inc.
11305 RANCHO BERNARDO RD
SUITE 121
SAN DIEGO CA. 92127
PHONE (858) 679-1974

REGISTERED PROFESSIONAL ENGINEER
RYAN J. OMER
NO. S 4437
EXP. 12/31/24
STRUCTURAL
STATE OF CALIFORNIA

FIRM: Orion Structural Engineering, Inc.
ADDRESS: 11305 Rancho Bernardo Road Ste 121
CITY: San Diego, CA
PHONE: 858-679-1974


PROJECT SPECIFIC PROFESSIONAL OF RECORD

FIRM:
ADDRESS:
CITY:
PHONE:

REVISIONS

1 -
2 -
3 -
4 -
5 -

| | |
|---|---|
| PROJECT NO.: | 00-0000 |
| DRAFTER: | 00 |
| SCALE: | AS NOTED |
| DATE: | 00-00-00 |

SHEET NUMBER
# M0.0

10/31/2023 12:06:47 PM

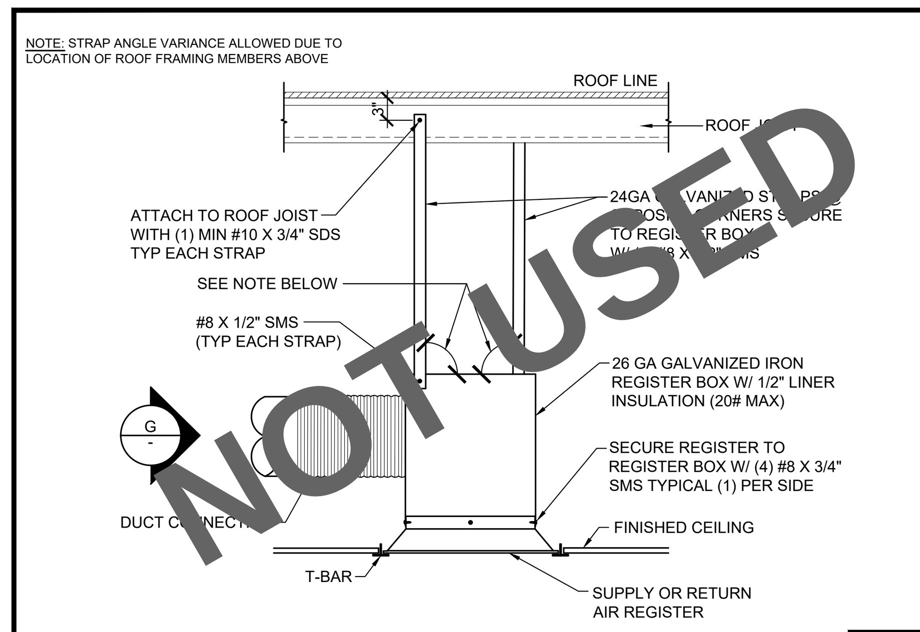


SECTION AT REGISTER
SCALE: 3/4" = 1'-0"
A

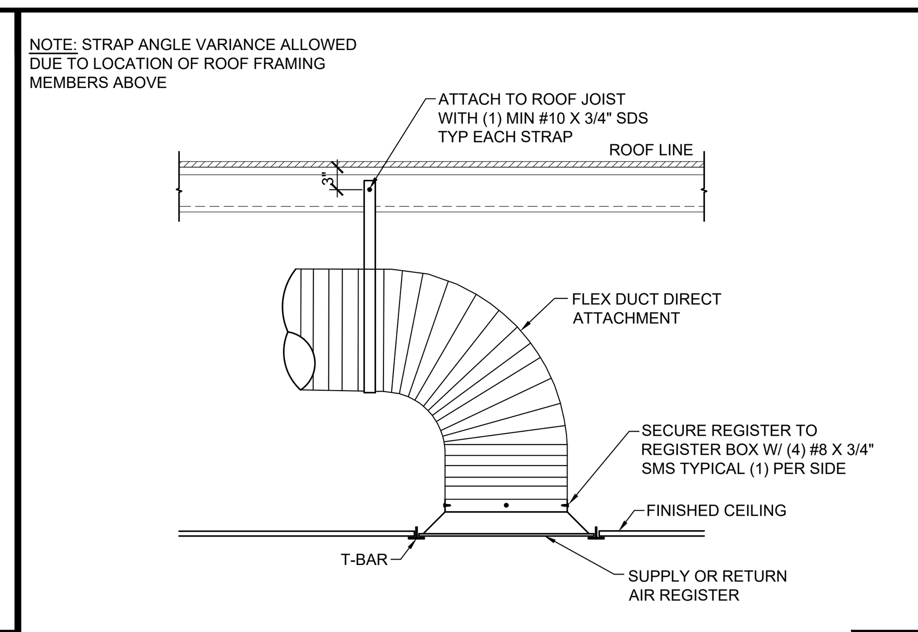


SECTION AT REGISTER (OPTIONAL)
SCALE: 3/4" = 1'-0"
B

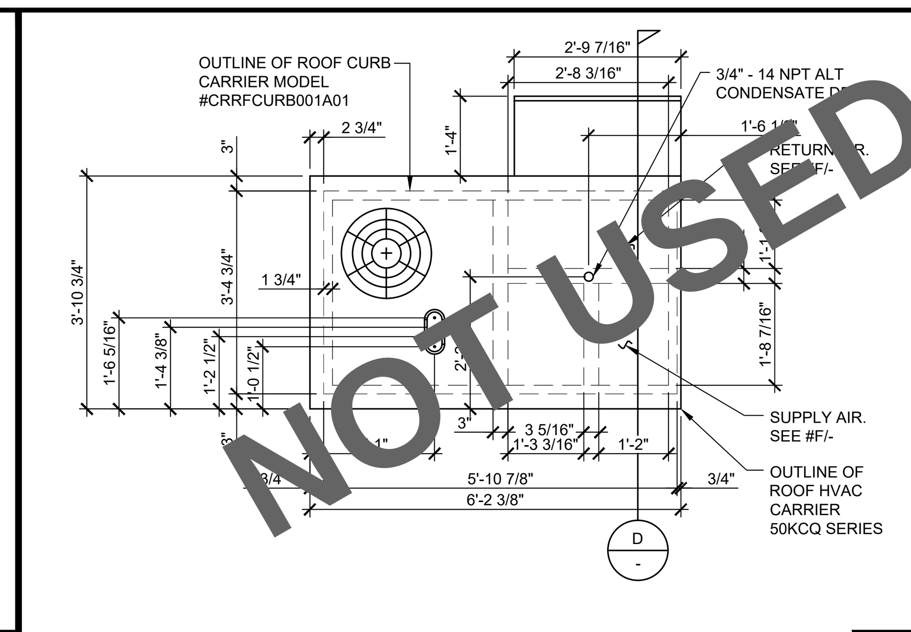


ROOF CURB & UNIT PROFILE (TOP VIEW)
SCALE: 1/2" = 1'-0"
C

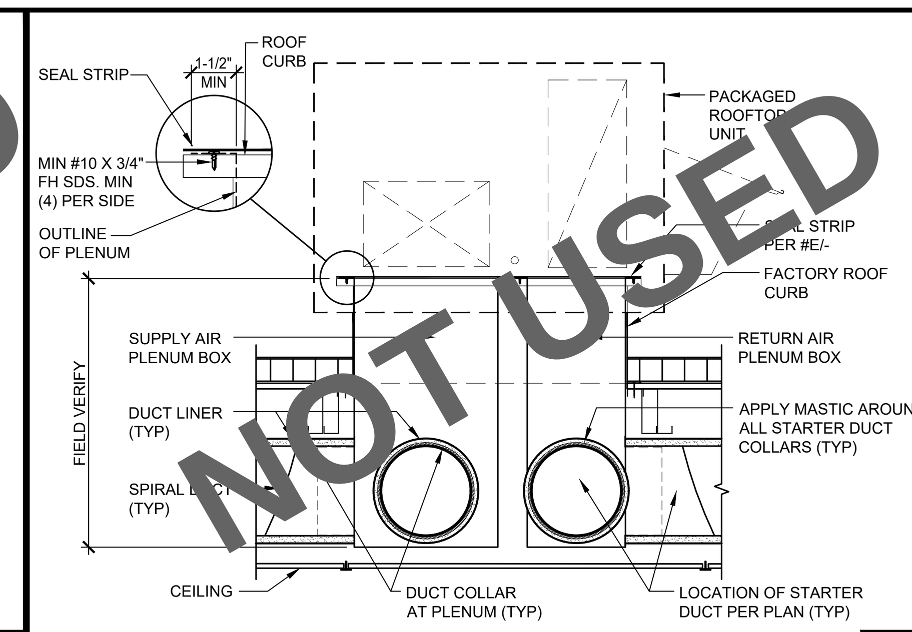


SECTION THROUGH ROOF CURB & UNIT
SCALE: 3/4" = 1'-0"
D

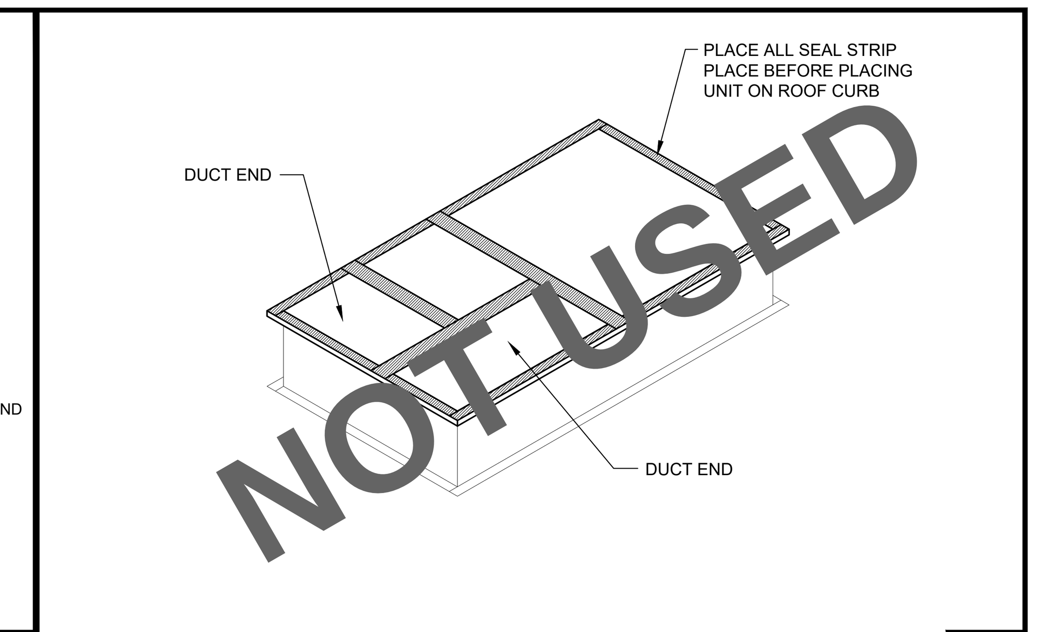


SEAL STRIP AT ROOF CURB
SCALE: 1/2" = 1'-0"
E

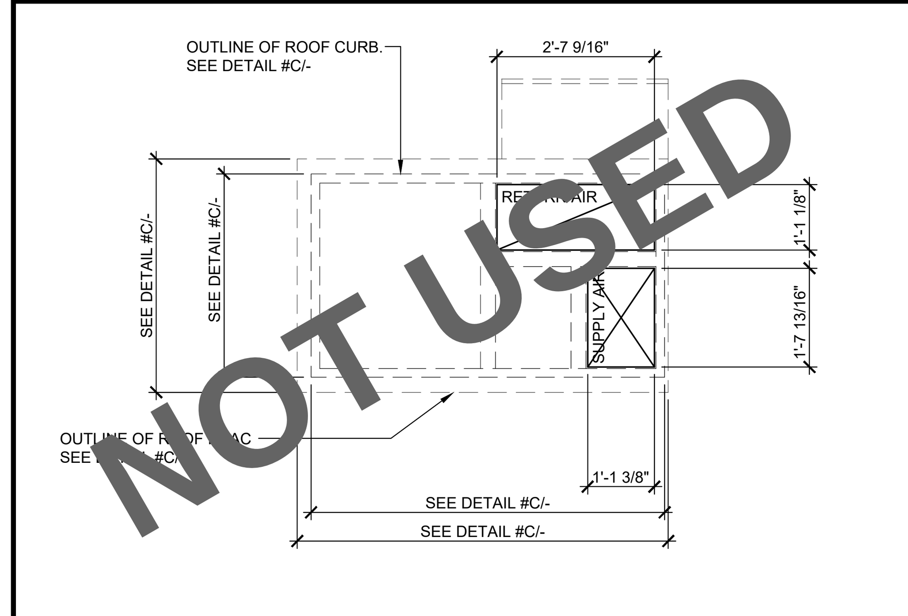


ROOF HVAC SUPPLY & RETURN PLENUM (TOP VIEW)
SCALE: 1/2" = 1'-0"
F

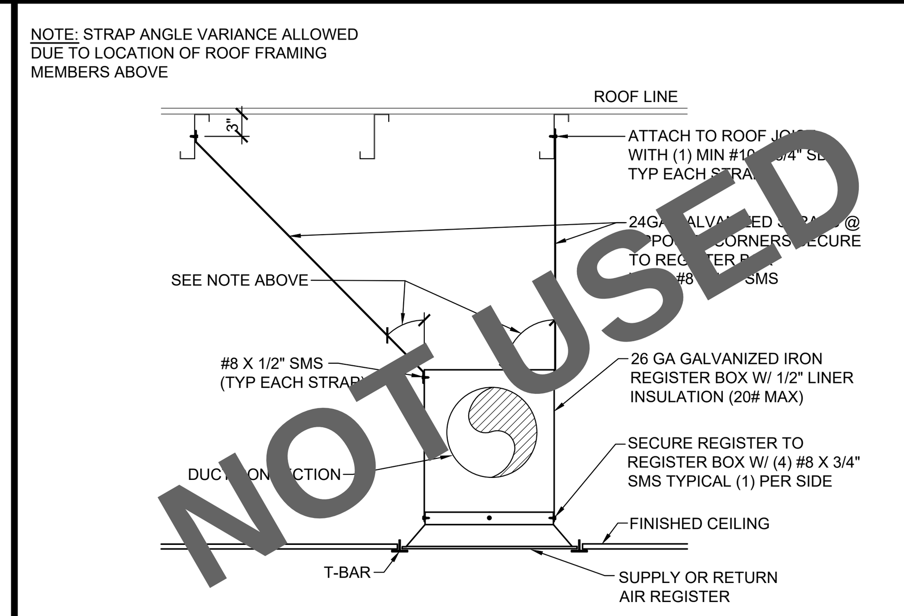


REGISTER BOX (SIDE VIEW)
SCALE: 3/4" = 1'-0"
G

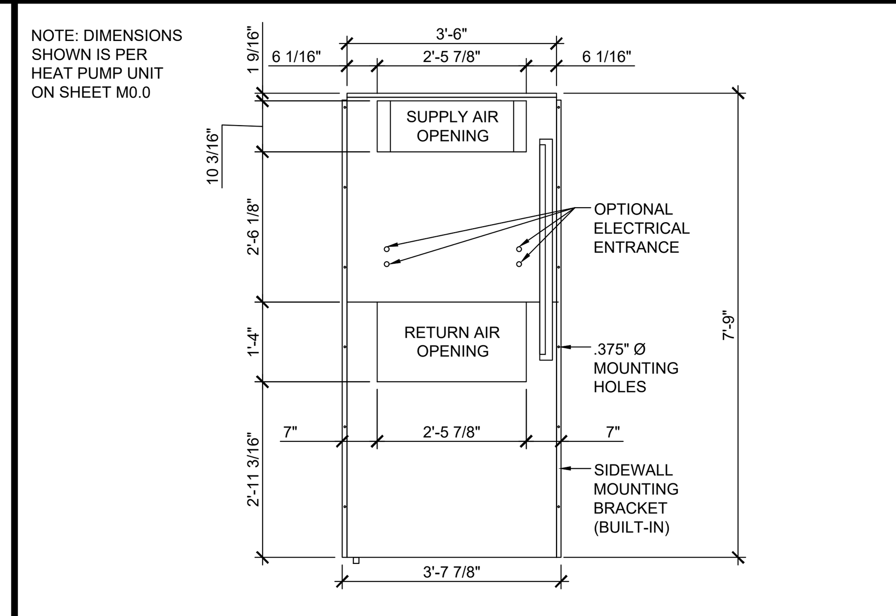


3.5 THRU 5 TON WALL MT HVAC REAR VIEW
SCALE: 3/4" = 1'-0"
H

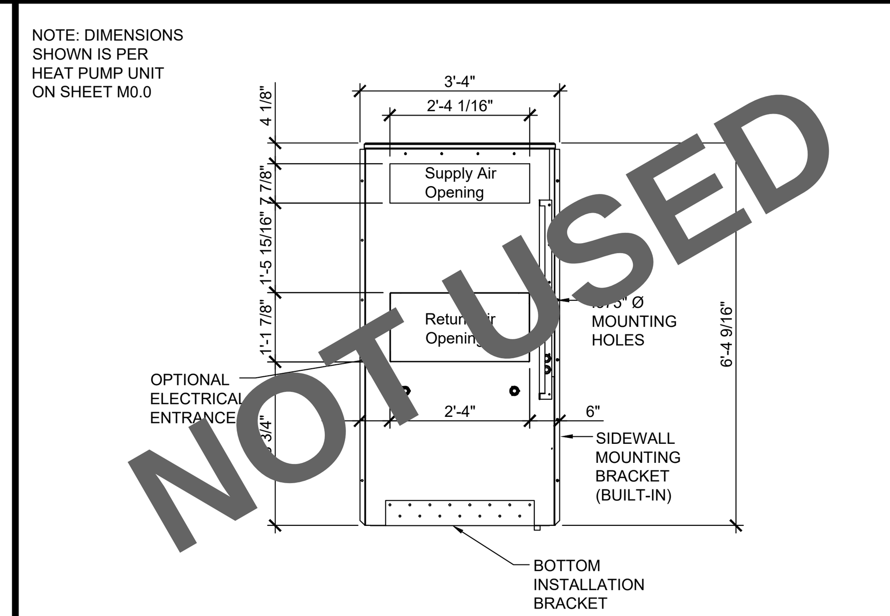


2.5 THRU 3 TON WALL MT HVAC REAR VIEW
SCALE: 3/4" = 1'-0"
I

## MEP COMPONENT ANCHORAGE NOTE

ALL MECHANICAL, PLUMBING, AND ELECTRICAL COMPONENTS SHALL BE ANCHORED AND INSTALLED PER THE DETAILS ON THE DSA APPROVED CONSTRUCTION DOCUMENTS. THE FOLLOWING COMPONENTS SHALL BE ANCHORED OR BRACED TO MEET THE FORCE AND DISPLACEMENT REQUIREMENTS PRESCRIBED IN THE 2022 CBC SECTIONS 1617A.1.18 THROUGH 1617A.1.26 AND ASCE 7-16 CHAPTERS 13, 26, AND 30.

1. ALL PERMANENT EQUIPMENT AND COMPONENTS.
2. TEMPORARY, MOVABLE OR MOBILE EQUIPMENT THAT IS PERMANENTLY ATTACHED (E.G. HARD WIRED) TO THE BUILDING UTILITY SERVICES SUCH AS ELECTRICITY, GAS OR WATER. "PERMANENTLY ATTACHED" SHALL INCLUDE ALL ELECTRICAL CONNECTIONS EXCEPT PLUGS FOR 110/220 VOLT RECEPTACLES HAVING A FLEXIBLE CABLE.
3. TEMPORARY, MOVABLE OR MOBILE EQUIPMENT WHICH IS HEAVIER THAN 400 POUNDS OR HAS A CENTER OF MASS LOCATED 4 FEET OR MORE ABOVE THE ADJACENT FLOOR OR ROOF LEVEL THAT DIRECTLY SUPPORT THE COMPONENT IS REQUIRED TO BE RESTRAINED IN A MANNER APPROVED BY DSA

THE FOLLOWING MECHANICAL AND ELECTRICAL COMPONENTS SHALL BE POSITIVELY ATTACHED TO THE STRUCTURE, BUT NEED NOT DEMONSTRATE DESIGN COMPLIANCE WITH THE REFERENCES NOTED ABOVE. THESE COMPONENTS SHALL HAVE FLEXIBLE;E CONNECTIONS PROVIDED BETWEEN THE COMPONENT AND ASSOCIATED DUCTWORK, PIPING, AND CONDUIT. FLEXIBLE CONNECTIONS MUST ALLOW MOVEMENT IN BOTH TRANSVERSE DIRECTIONS.

A. COMPONENTS WEIGHING LESS THAN 400 POUNDS AND HAVE A CENTER OF MASS LOCATED 4 FEET OR LESS ABOVE THE ADJACENT FLOOR OR ROOF LEVEL THAT DIRECTLY SUPPORT THE COMPONENT.
B. COMPONENTS WEIGHING LESS THAN 20 POUNDS, OR IN THE CASE OF DISTRIBUTED SYSTEMS, LESS THAN 5 POUNDS PER FOOT, WHICH ARE SUSPENDED FROM A ROOF OR FLOOR OR HUNG FROM A WALL.

THE ANCHORAGE OF ALL MECHANICAL, ELECTRICAL, AND PLUMBING COMPONENTS SHALL BE SUBJECT TO THE APPROVAL OF THE DESIGN PROFESSIONAL IN GENERAL RESPONSIBLE CHARGE OR STRUCTURAL ENGINEER DELEGATED RESPONSIBILITY AND ACCEPTANCE BY DSA. THE PROJECT INSPECTOR WILL VERIFY THAT ALL COMPONENTS AND EQUIPMENT HAVE BEEN ANCHORED IN ACCORDANCE WITH THE ABOVE REQUIREMENTS

## PIPING, DUCTWORK AND ELECTRICAL DISTRIBUTION SYSTEM BRACING NOTE

PIPING, DUCTWORK, AND ELECTRICAL DISTRIBUTION SYSTEMS SHALL BE BRACED TO COMPLY WITH THE FORCES AND DISPLACEMENTS PRESCRIBED IN ASCE 7-16 SECTION 13.3 AS DEFINED IN ASCE 7-16 SECTION 13.6.5, 13.6.6, 13.6.7, 13.6.8, AND 2022 CBC, SECTIONS 1617A.1.24, 1617A.1.25 AND 1617A.1.26.

THE METHOD OF SHOWING BRACING AND ATTACHMENTS TO THE STRUCTURE FOR THE IDENTIFIED DISTRIBUTION SYSTEM ARE AS NOTED BELOW. WHEN BRACING AND ATTACHMENTS ARE BASED ON A PREAPPROVED INSTALLATION GUIDE (E.G. OSHPD OPM FOR 2013 CBC OR LATER), COPIES OF THE BRACING SYSTEM INSTALLATION GUIDE OR MANUAL SHALL BE AVAILABLE ON THE JOBSITE PRIOR TO THE START OF AND DURING THE HANGING AND BRACING OF THE DISTRIBUTION SYSTEMS. THE STRUCTURAL ENGINEER OF RECORD SHALL VERIFY THE ADEQUACY OF THE STRUCTURE TO SUPPORT THE HANGER AND BRACE LOADS.

MECHANICAL PIPING (MP), MECHANICAL DUCTS (MD), PLUMBING PIPING (PP), ELECTRICAL DISTRIBUTION SYSTEMS (E):

MP☐ MD☒ PP☐ E ☐ - OPTION 1: DETAILED ON THE APPROVED DRAWINGS WITH PROJECT SPECIFIC NOTES AND DETAILS

MP☐ MD☐ PP☐ E ☐ - OPTION 2: SHALL COMPLY WITH THE APPLICABLE OSHPD PRE-APPROVAL (OPM #) #________________

## METAL DUCT NOTES:

1. CMC SECTION 603.7.1.2 HORIZONTAL ROUND DUCTS: HORIZONTAL ROUND DUCTS NOT MORE THAN 40" IN DIAMETER WHERE SUSPENDED FROM ABOVE SHALL BE SUPPORTED WITH ONE HANGER PER INTERVAL AND IN ACCORDANCE WITH SECTION 603.7.1.3 THROUGH SECTION 603.7.1.5
2. CMC SECTION 603.7.1.3 DUCTS SHALL BE EQUIPPED WITH TIGHT-FITTING CIRCULAR BANDS EXTENDING AROUND THE ENTIRE PERIMETER OF THE DUCT AT EACH SPECIFIED SUPPORT INTERVAL.
3. CMC SECTION 603.7.1.4 SIZE OF CIRCULAR BANDS: CIRCULAR BANDS SHALL BE NOT LESS THAN 1" WIDE NOR LESS THAN EQUIVALENT TO THE GAUGE OF THE DUCT MATERIAL IT SUPPORTS.

   EXCEPTION: DUCT NOT MORE THAN 10" IN DIAMETER SHALL BE PERMITTED TO BE SUPPORTED BY NO. 18 GAUGE GALVANIZED STEEL WIRE
4. CMC SECTION 603.7.1.5 CONNECTION: EACH CIRCULAR BAND SHALL BE PROVIDED WITH MEANS OF CONNECTING TO THE SUSPENDING SUPPORT

## GENERAL NOTES:

1. ALL AIR DISTRIBUTION SYSTEM DUCTS AND PLENUMS, INCLUDING BUT NOT LIMITED TO BUILDING CAVITIES, MECHANICAL CLOSETS, AIR-HANDLER BOXES, AND SUPPORT PLATFORMS USED AS DUCTS OR PLENUMS, SHALL BE INSTALLED, SEALED AND INSULATED TO MEET THE REQUIREMENT OF THE CMC SECTIONS: 601.0, 602.0, 603.0, 604.0, AND 605.0, AND ANSI/SMACNA-006-2006 HVAC DUCT CONSTRUCTION STANDARDS METAL AND FLEXIBLE, 3RD EDITION INCORPORATED HEREIN BY REFERENCE. CONNECTIONS OF METAL DUCTS AND THE INNER CORE OF FLEXIBLE DUCTS SHALL BE MECHANICALLY FASTENED. OPENINGS SHALL BE SEALED WITH MASTIC, TAPE, AEROSOL SEALANT OR OTHER DUCT-CLOSURE SYSTEM THAT MEETS THE APPLICABLE REQUIREMENTS OF UL 181, UL 181A, OR UL 181B. IF MASTIC OR TAPE IS USED TO SEAL OPENINGS GREATER THAN 1/4 INCH, THE COMBINATION OF MASTIC AND EITHER MESH OR TAPE SHALL BE USED.

   PORTIONS OF SUPPLY-AIR AND RETURN AIR DUCTS CONVEYING HEATED OR COOLED AIR LOCATED IN ONE OR MORE OF THE FOLLOWING SPACES SHALL BE INSULATED TO A MINIMUM INSTALLED LEVEL OF R-8:

   1. OUTDOORS; OR
   2. IN A SPACE BETWEEN THE ROOF AND AN INSULATED CEILING; OR
   3. IN A SPACE DIRECTLY UNDER A ROOF WITH FIXED VENTS OR OPENINGS TO THE OUTSIDE OR UNCONDITIONED SPACES; OR
   4. IN AN UNCONDITIONED CRAWLSPACE; OR
   5. IN OTHER UNCONDITIONED SPACES

   PORTIONS OF THE SUPPLY-AIR DUCTS THAT ARE NOT IN ONE OF THESE SPACES, INCLUDING DUCTS BURIED IN CONCRETE SLAB, SHALL BE INSULATED TO A MINIMUM INSTALLED LEVEL OF R-4.2 (OR ANY HIGHER LEVEL REQUIRED BY CMC SECTION 605.0) OR BE ENCLOSED IN DIRECTLY CONDITIONED SPACE
2. ALL HVAC EQUIPMENT, DUCT WORK, PLENUMS, SUPPORTS AND ANCHORAGE SHALL COMPLY WITH THE REQUIREMENTS PROVIDED BY DSA ON SHEET M0.0
3. ALL FINAL CONNECTIONS OF DUCT WORK AND PLENUMS SHALL COMPLY WITH ENERGY CODE SECTION 120.4 (b),(f)
4. ROOF MOUNT HVAC UNITS SET ON A FACTORY ROOF CURB SHALL COMPLY WITH THE ROOF CURB AND HVAC UNIT MANUFACTURE FOR THE SEALING AND GASKET OF THE UNIT TO THE CURB CONNECTION
5. ALL DUCK WORK INSTALLED IN THE FACTORY SHALL COMPLY WITH ENERGY CODE SECTIONS 120.4(a),(b),(c),(d),(e),(f)
6. ALL JOINTS MUST BE SEALED USING UL 181 TAPE OR MASTIC IN THE DUCT SYSTEM INCLUDING HVAC EQUIPMENT, PLENUMS, CURB AND BOOTS

## FLEXIBLE DUCT NOTES:

1. FLEXIBLE AIR DUCTS AND CONNECTORS SHALL BE NOT MORE THAN 5 FT IN LENGTH AND SHALL NOT BE USED IN LIEU OF RIGID ELBOWS OR FITTINGS. FLEXIBLE AIR DUCTS SHALL BE PERMITTED TO BE USED AS AN ELBOW AT A TERMINAL DEVICE PER ENERGY CODE SECTION 120.4 AND CMC SECTION 603.4
2. HORIZONTAL FLEX DUCTS SHALL BE SUPPORTED AT A MAXIMUM 4 FT INTERVALS, WITH HANGING STRAPS A MINIMUM 1-1/2" WIDE. FLEX DUCTS MUST BE PULLED TIGHT WITH A MAXIMUM SAG OF 1/2" PER FOOT OF HORIZONTAL RUN. FLEXIBLE DUCT SHALL NOT BE KINKED OR CRUSHED. FLEXIBLE DUCTS SHALL USE A DRAWBAND TO ATTACH THE INNER CORE TO A METAL COLLAR

| SHEET METAL DUCT & FITTINGS | | |
|---|---|---|
| MAXIMUM DIA / WIDTH OF DUCT & FITTINGS | SHEET METAL GAUGE (MIN) | DUCT HANGER GAUGE, TYPE & SPACING |
| 6" THRU 10" | 26 GA | 18 GA MIN GALV STEEL WIRE AT 10'-0" FT MAX OC |
| 11" THRU 12" | 26 GA | 24 GA MIN 1-1/2" GALV STEEL STRAP MIN 1" AT 10'-0" FT MAX OC |
| 13" THRU 24" | 24 GA | 22 GA MIN 1-1/2" GALV STEEL STRAP MIN 1" AT 10'-0" FT MAX OC |
| 25" THRU 30" | 22 GA | 18 GA MIN 1-1/2" GALV STEEL STRAP MIN 1" AT 10'-0" FT MAX OC |

| FLEXIBLE DUCT DESIGN AIRFLOW | |
|---|---|
| DUCT SIZE | DESIGN AIRFLOW (CFM) |
| 6" | 75 |
| 8" | 160 |
| 10" | 300 |
| 12" | 480 |

| ROUND METAL PIPE DUCT DESIGN AIRFLOW | |
|---|---|
| DUCT SIZE | DESIGN AIRFLOW (CFM) |
| 6" | 85 |
| 8" | 180 |
| 10" | 325 |
| 12" | 525 |

## HVAC SEQUENCE OF OPERATIONS:

**OPTIMUM START:** THE THERMOSTAT WILL AUTOMATICALLY CALCULATE WHEN TO START THE UNIT ONE-HOUR PRIOR TO OCCUPANCY, IN EITHER HEATING OR COOLING MODE, TO ACHIEVE SPACE TEMPERATURE BY THE START OF THE DAY. CALCULATIONS WILL BE DONE BEFORE EACH OPTIMUM START SCHEDULE AND BE BASED ON A SEVEN DAYS OF PERVIOUS RUN-TIME FOR THE SPACE. OPTIMUM START WILL USE ECONOMIZER TO PRE-COOL THE BUILDING IF OUTSIDE AIR TEMPERATURE IS GREATER THAN THE RETURN AIR TEMPERATURE ON TABLE 140.4-E DURING ALL OCCUPIED PERIODS. DURING MORNING WARM-UP OUTSIDE AIR DAMPER WILL BE CLOSED UNTIL OCCUPIED HOURS

**OCCUPIED HEAT DEMAND:** IF THE THERMOSTAT NEEDS TO HEAT THE SPACE, HEAT MODE WILL BE ACTIVE. AT THE END OF THE HEATING CYCLE THERMOSTAT WILL TURN OFF HEAT MODE. A FEW MINUTES AFTER HEAT MODE HAS BEEN TURNED OFF ALL ALL CONDITIONED AIR TO BE PUSHED INTO THE SPACE. OUTSIDE AIR DAMPER WILL BE SET TO CONFIGURED MINIMUM VENTILATION POSITION

**OCCUPIED COOL DEMAND:** IF THERMOSTAT NEEDS TO COOL THE SPACE AND THE OUTSIDE TEMPERATURE IS GREATER THAN THE RETURN AIR TEMPERATURE ON TABLE 140.4-E DURING ALL OCCUPIED PERIODS, IT WILL OPEN THE OUTSIDE AIR DAMPER AS AN ECONOMIZER. THERMOSTAT WILL TURN-ON COOL MODE. IF OUTSIDE AIR IS NOT PROVIDING ENOUGH COOLING, THERMOSTAT WILL START THE AIR HANDLER COMPRESSOR. AT THE END OF THE COOLING CYCLE THERMOSTAT WILL DISABLE THE COMPRESSOR. A FEW MINUTES AFTER IT HAS BEEN DISABLED ALLOWING ALL CONDITIONED AIR TO BE PUSHED INTO THE SPACE. IF ECONOMIZER IS UNABLE TO BE USED, OUTSIDE AIR DAMPER WILL BE SET TO CONFIGURED MINIMUM VENTILATION POSITION

**DEAD-BAND:** THERMOSTAT WILL NOT ALLOW BOTH HEAT AND COOL MODES TO RUN SIMULTANEOUSLY. THERMOSTAT USES AN INTELLIGENT AUTO-ADJUSTING DEAD-BAND OF FIVE DEGREES TO PREVENT CROSS OVER

**OCCUPIED VENTILATION (FAN ON):** SUPPLY AIR FAN WILL BE CONTINUOUSLY ON DURING OCCUPIED PERIODS IN HEATING OR COOLING MODE CYCLE. NORMAL OPERATION OF THE SYSTEM IS AT THE MINIMUM DCV ECONOMIZER DAMPER POSITION PER ATTACHMENT 3 ON SHEET M0.0. IF SPACE CO2 SENSOR READS 1,100 PPM OR ABOVE THEN THE ECONOMIZER WILL OPEN THE OUTSIDE AIR DAMPER TO ALLOW INCREASED OUTSIDE AIR INTO THE SPACE AND REPLACE THE ELEVATED CO2 LEVEL WITH FRESH AIR. WHEN CO2 READING IS LESS THAN 1,100 PPM, THE ECONOMIZER OUTSIDE AIR DAMPER WILL RETURN TO ORIGINAL POSITION

**UNOCCUPIED HEAT DEMAND:** IF THE THERMOSTAT NEEDS TO HEAT THE SPACE, HEAT-MODE WILL RUN ITS CYCLE. AT THE END OF THE HEATING CYCLE THERMOSTAT WILL DISABLE HEAT-MODE. A FEW MINUTES AFTER IT HAS BEEN DISABLED ALLOWING ALL CONDITIONED AIR TO BE PUSHED INTO THE SPACE. OUTSIDE AIR DAMPER WILL REMAIN CLOSED DURING ALL UNOCCUPIED PERIODS

**SET-POINTS AND SCHEDULE:** THERMOSTAT WILL BE SCHEDULED TO USE CUSTOMER-DEFINED OCCUPIED AND UNOCCUPIED SET-POINTS. FOR THE START OF THE DAY SCHEDULE, THERMOSTAT WILL USE OPTIMUM START. THERMOSTAT WILL ALLOW A LIMITED ADJUSTMENT FROM THE CUSTOMER OCCUPIED SET-POINTS (IF CUSTOMER ALLOWS). DURING UNOCCUPIED THERMOSTAT WILL ALLOW OVERRIDE OF UNOCCUPIED SETBACK, HOWEVER WILL GO BACK TO THE CUSTOMER'S UNOCCUPIED SETBACK EVERY 2 HOURS (ADJUSTABLE) AFTER THE END OF THE DAY SCHEDULE

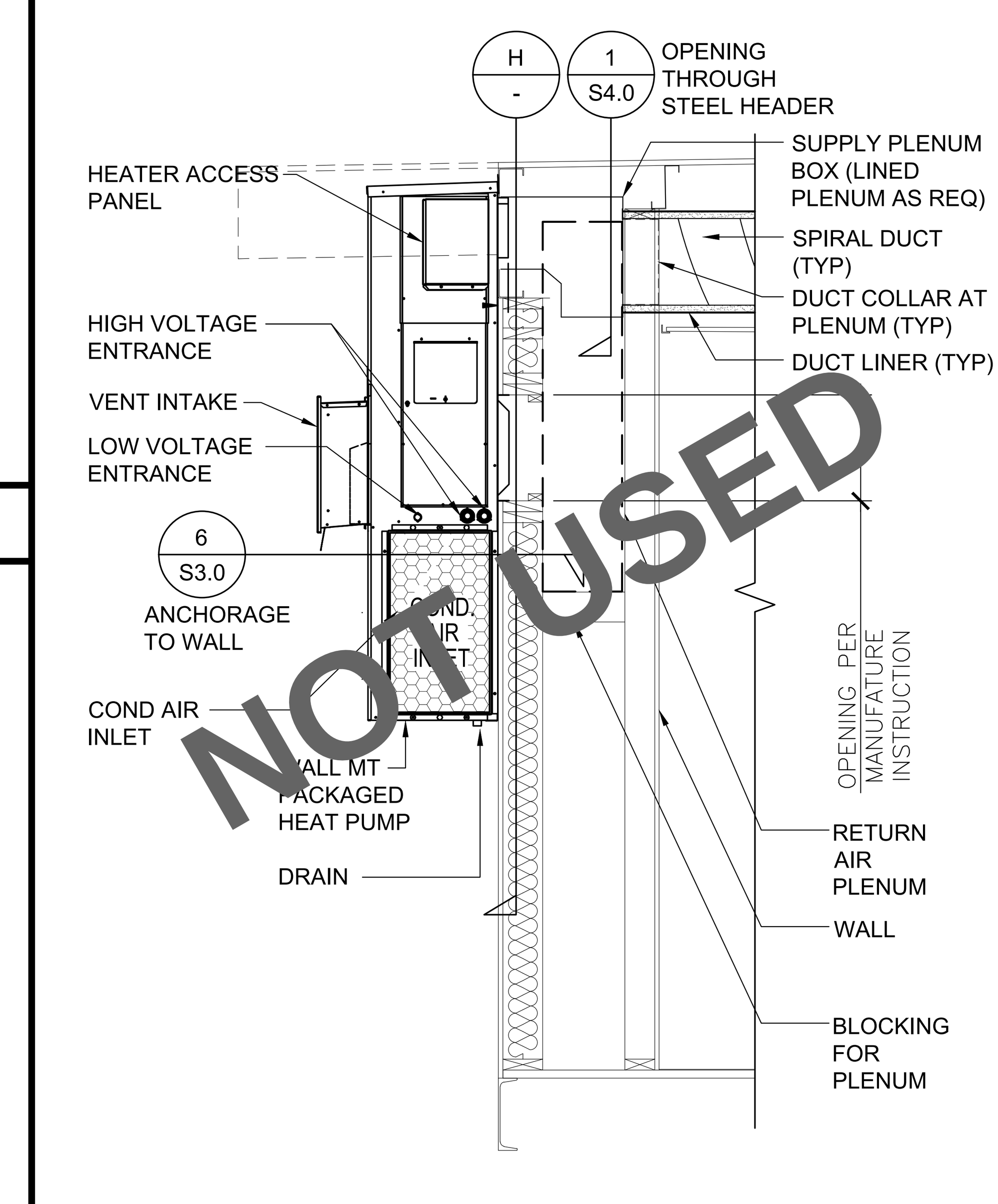


2.5 THRU 3 WALL MT HVAC SIDE VIEW
SCALE: 3/4" = 1'-0"
J

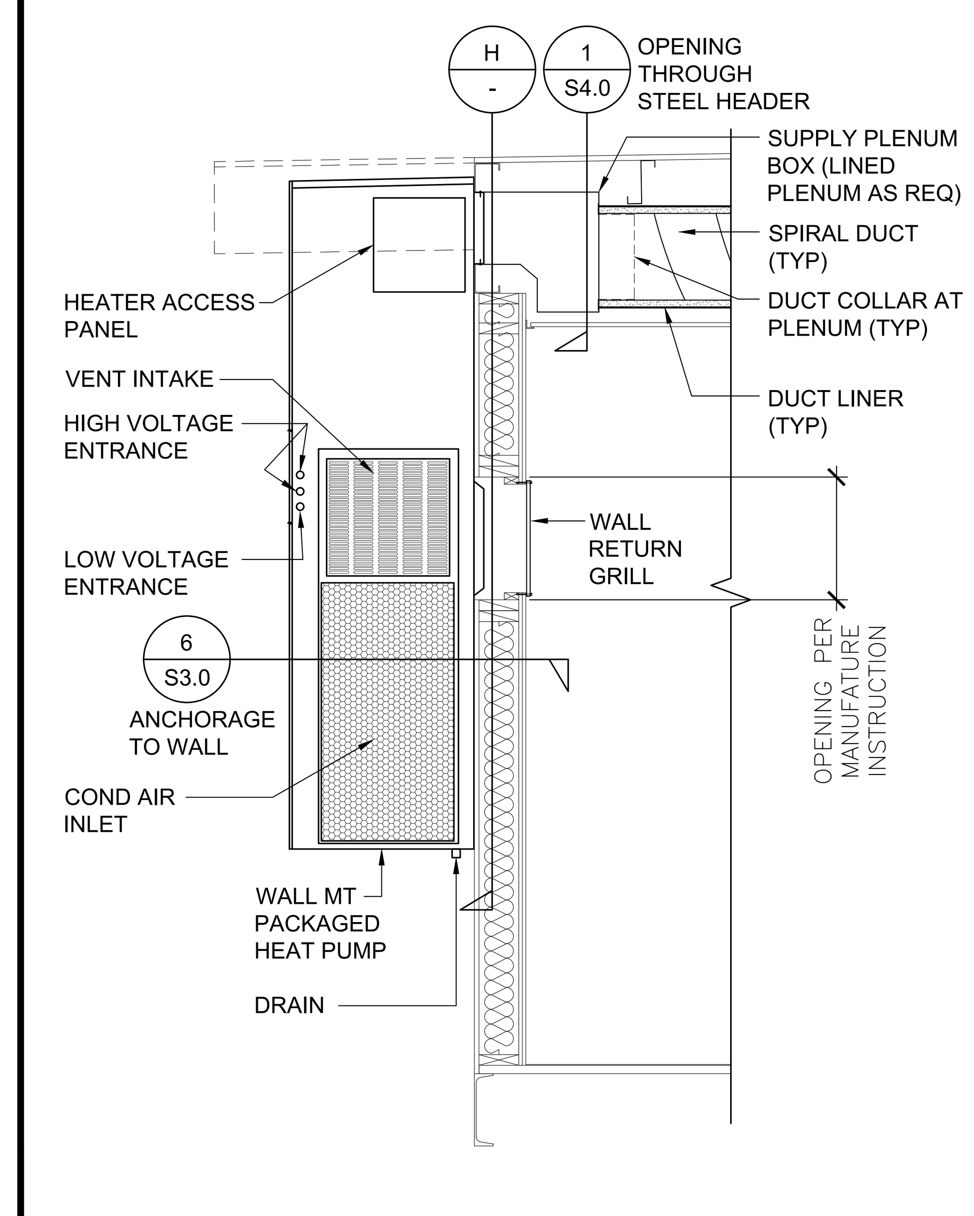


3.5 THRU 5 WALL MT HVAC SIDE VIEW
SCALE: 3/4" = 1'-0"
K

STATE AGENCY APPROVAL

IDENTIFICATION STAMP
DIV. OF THE STATE ARCHITECT
APP. 04-124098 INC:
REVIEWED FOR
SS ☑ FLS ☑ ACS ☑
DATE: 11/14/24

COMPANY
15345 FAIRFIELD RANCH ROAD, SUITE #160, CHINO, CA 91709
OFFICE: (909) 740-3120, FAX: (909) 726-9470
WEBSITE: WWW.SKCCOMPANY.COM
MANUFACTURER #MF1279666 DEALER # DL1279666
GC LIC # 992118 SBE CERTIFIED

ALL DESIGNS INDICATED ON THESE PLANS/DRAWINGS ARE PROPERTY OF SKC, INC AND ARE FOR THE USE BY SKC IN THE SPECIFIED JOB ONLY. THEY SHALL NOT BE USED AND/OR DUPLICATED OR TRANSMITTED IN ANY FORM, FOR ANY PURPOSE WITHOUT THE PRIOR WRITTEN CONSENT OF SKC, INC. ANY UNAUTHORIZED USE OF THESE PLANS SHALL SUBJECT THE OWNER OF SAID PROPERTY TO LIQUIDATED DAMAGES OF $75,000.00. THESE PLANS ARE PROTECTED UNDER THE PROVISIONS OF THE 1976 COPYRIGHT ACT COPYRIGHT SKC, © ALL RIGHTS RESERVED.

DISTRICT/CUSTOMER NAME: NEXTMOD

SCHOOL/SITE NAME: STOCKPILE

SHEET TITLE:

MECHANICAL DETAILS

PRE-CHECK (PC) DOCUMENT
CODE: 2022 CBC
A SEPARATE PROJECT APPLICATION FOR CONSTRUCTION IS REQUIRED

APPROVED
DIV. OF THE STATE ARCHITECT
APP: 04-122454 PC
REVIEWED FOR
SS ☑ FLS ☑ ACS ☑ CG ☑
DATE: 11/14/2023

PROFESSIONAL OF RECORD ON PC

ORION
Structural Engineering, Inc.
11305 RANCHO BERNARDO RD SUITE 121
SAN DIEGO CA. 92127
PHONE (858) 679-1974

REGISTERED PROFESSIONAL ENGINEER
RYAN J. OWER
No. S 4437
EXP. 12/31/24
STRUCTURAL
STATE OF CALIFORNIA

FIRM: Orion Structural Engineering, Inc.
ADDRESS: 11305 Rancho Bernardo Road Ste 121
CITY: San Diego, CA
PHONE: 858-679-1974

PROJECT SPECIFIC PROFESSIONAL OF RECORD

FIRM:
ADDRESS:
CITY:
PHONE:

REVISIONS

1 -
2 -
3 -
4 -
5 -

| | |
|---|---|
| PROJECT NO.: | 00-0000 |
| DRAFTER: | 00 |
| SCALE: | AS NOTED |
| DATE: | 00-00-00 |

SHEET NUMBER

M0.1

10/31/2023 12:06:59 PM

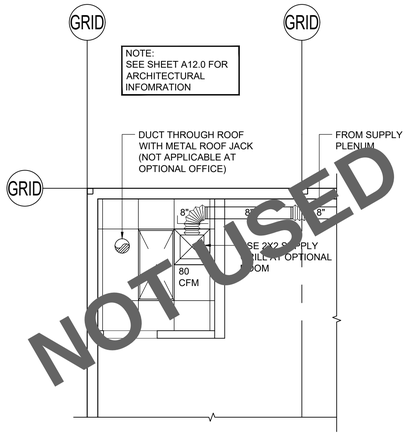


MECH PLAN FOR OPT RR/JANITOR RM/OFFICE **A**

SCALE: 1/4" = 1'-0"

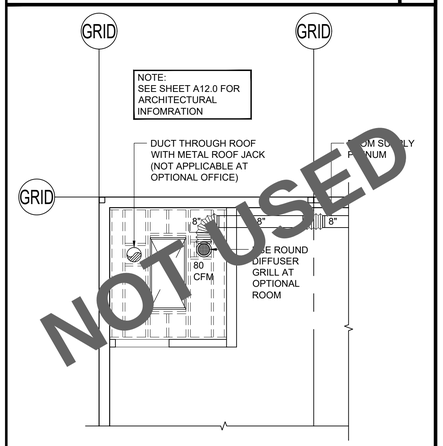


MECH PLAN FOR OPT RR/JANITOR RM/OFFICE **B**

SCALE: 1/4" = 1'-0"

MECHANICAL VENTILATION:
MIN OUTSIDE AIR FOR OCCUPIABLE SPACES PER CEC 120.1(c)3:
48 (NET OCC) X 15 CFM = 720 CFM

DEMAND CONTROL VENTILATION (DCV):
~~CONTROLS SHALL~~ MIN VENTILATION RATE FOR DCV PER CEC 120.1(d)4E:
0.15 (PER TABLE 120.1-A) X 960 (BLDG SF) = 144 CFM

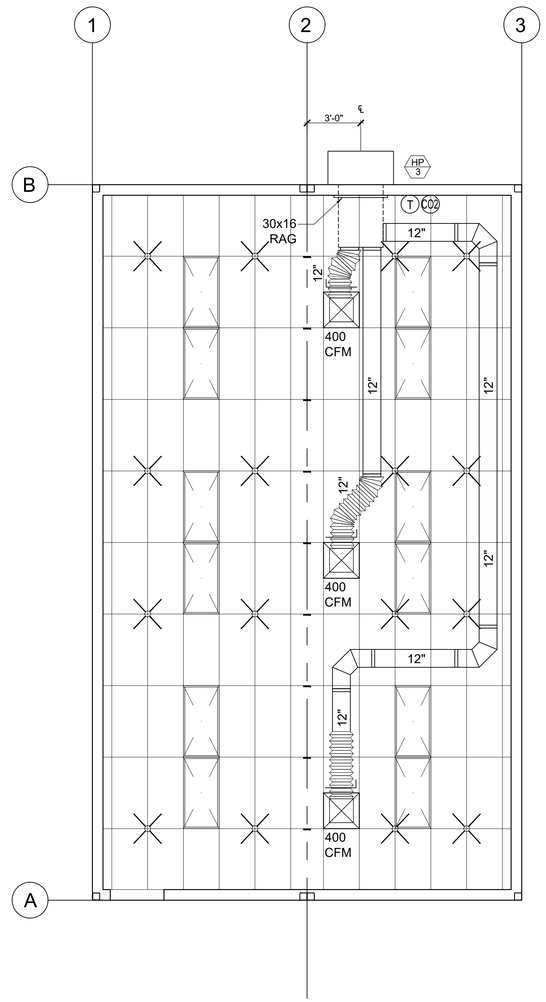


MECHANICAL PLAN (OPTION 'B' LEFT HAND)

SCALE: 1/4" = 1'-0"

MECHANICAL VENTILATION:
MIN OUTSIDE AIR FOR OCCUPIABLE SPACES PER CEC 120.1(c)3:
48 (NET OCC) X 15 CFM = 720 CFM

DEMAND CONTROL VENTILATION (DCV):
~~CONTROLS SHALL~~ MIN VENTILATION RATE FOR DCV PER CEC 120.1(d)4E:
0.15 (PER TABLE 120.1-A) X 960 (BLDG SF) = 144 CFM

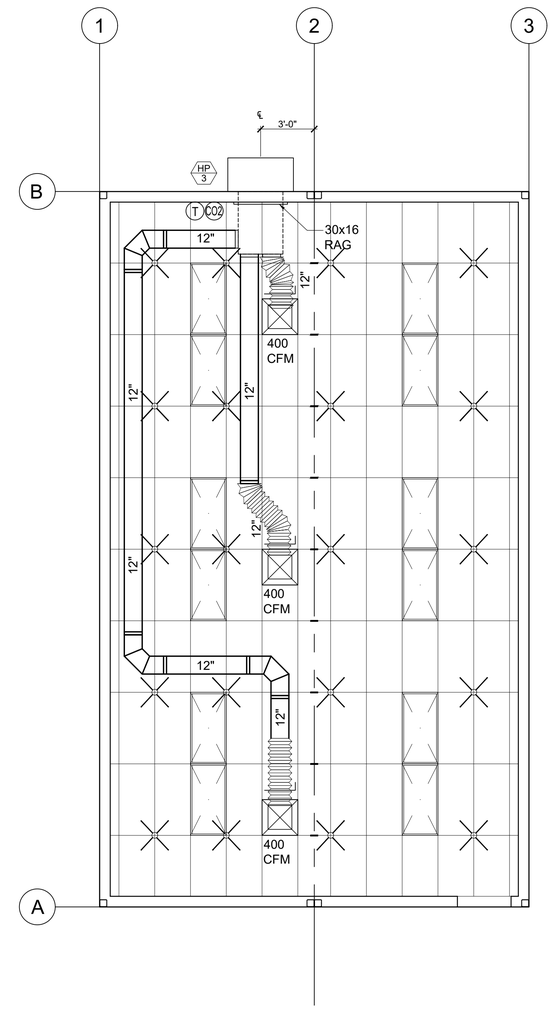


MECHANICAL PLAN (OPTION 'A' RIGHT HAND)

SCALE: 1/4" = 1'-0"

PROJECT SPECIFIC (CHECK ONE):

☒ STANDARD DESIGN AS SHOWN

☐ SOLATUBE OPTION. REFERENCE SHEET A11.0

## NOTES:

1. REFER TO SHEET M0.0 & M0.1 FOR DETAILS, LEGEND AND SCHEDULES
2. BUILDING OVERHANG PROJECTION MUST BE A MINIMUM 36" FOR ANY HVAC UNIT 13.00 SEER AND GREATER
3. DUCT SEALING LEAKAGE RATE SHALL NOT EXCEED 6%
4. WHEN AN INTERIOR ROOM(S) ARE ADDED AND COMBINED A/C SYSTEM EXCEEDS 2000 CFM, AN AUTOMATIC SHUT DOWN OF A/C UNITS MUST BE PROVIDED AND SHOWN ON THIS PLAN SET AND COORDINATED WITH THE ARCHITECT'S FIRE ALARM SYSTEM DRAWINGS PER CMC SECTION 608.1
5. PER ENERGY CODE SECTION 120.2(e), EACH SPACE-CONDITIONING SYSTEM SHALL BE INSTALLED WITH CONTROLS THAT COMPLY WITH THE FOLLOWING:
   THE CONTROLS SHALL BE CAPABLE OF AUTOMATICALLY SHUTTING OFF THE SYSTEM DURING PERIODS OF NON-USE AND SHALL HAVE:
   A. AN AUTOMATIC TIME SWITCH CONTROL DEVICE COMPLYING WITH SECTION 110.9, WITH AN ACCESSIBLE MANUAL OVERRIDE THAT ALLOWS OPERATION OF THE SYSTEM FOR UP TO 4 HOURS; OR
   B. AN OCCUPANY SENSOR; OR
   C. A 4-HOUR TIMER THAT CAN BE MANUALLY OPERATED

STATE AGENCY APPROVAL

IDENTIFICATION STAMP
DIV. OF THE STATE ARCHITECT
APP. 04-124098 INC:
REVIEWED FOR
SS ☑ FLS ☑ ACS ☑
DATE: 11/14/24


SKC COMPANY
15345 FAIRFIELD RANCH ROAD, SUITE #160, CHINO, CA 91709
OFFICE: (909) 740-3120, FAX: (909) 726-9470
WEBSITE: WWW.SKCCOMPANY.COM
MANUFACTURER #MF1279666 DEALER # DL1279666
GC LIC # 992118 SBE CERTIFIED



ALL DESIGNS INDICATED ON THESE PLANS/DRAWINGS ARE PROPERTY OF SKC, INC AND ARE FOR THE USE BY SKC IN THE SPECIFIED JOB ONLY. THEY SHALL NOT BE USED AND/OR DUPLICATED OR TRANSMITTED IN ANY FORM, FOR ANY PURPOSE WITHOUT THE PRIOR WRITTEN CONSENT OF SKC, INC. ANY UNAUTHORIZED USE OF THESE PLANS SHALL SUBJECT THE OWNER OF SAID PROPERTY TO LIQUIDATED DAMAGES OF $75,000.00. THESE PLANS ARE PROTECTED UNDER THE PROVISIONS OF THE 1976 COPYRIGHT ACT COPYRIGHT SKC, © ALL RIGHTS RESERVED.


DISTRICT/CUSTOMER NAME:
NEXTMOD

SCHOOL/SITE NAME:
STOCKPILE

SHEET TITLE:

MECHANICAL PLAN
WALL MOUNT
24'x40'

PRE-CHECK (PC) DOCUMENT
CODE: 2022 CBC
A SEPARATE PROJECT APPLICATION FOR CONSTRUCTION IS REQUIRED

APPROVED
DIV. OF THE STATE ARCHITECT
APP: 04-122454 PC
REVIEWED FOR
SS ☑ FLS ☑ ACS ☑ CG ☑
DATE: 11/14/2023

PROFESSIONAL OF RECORD ON PC


ORION
Structural Engineering, Inc.
11305 RANCHO BERNARDO RD
SUITE 121
SAN DIEGO CA 92127
PHONE (858) 679-1974


REGISTERED PROFESSIONAL ENGINEER
RYAN J. DUFF
No. 3437
EXP. 12/31/24
STRUCTURAL
STATE OF CALIFORNIA

FIRM: Orion Structural Engineering, Inc.
ADDRESS: 11305 Rancho Bernardo Road Ste 121
CITY: San Diego, CA
PHONE: 858-679-1974

PROJECT SPECIFIC PROFESSIONAL OF RECORD

FIRM:
ADDRESS:
CITY:
PHONE:

REVISIONS

1 -
2 -
3 -
4 -
5 -

| | |
|---|---|
| PROJECT NO.: | 00-0000 |
| DRAFTER: | 00 |
| SCALE: | AS NOTED |
| DATE: | 00-00-00 |

SHEET NUMBER

M1.1

10/31/2023 12:07:18 PM

| CERTIFICATE OF COMPLIANCE - NONRESIDENTIAL PERFORMANCE COMPLIANCE METHOD | NRCC-PRF-E |
|---|---|
| Nonresidential Performance Compliance Method | (Page 1 of 18) |

| Project Name: | 24x40 (PC #04-122454) | Date Prepared: | 2023-11-03 |
|---|---|---|---|

**A. General Information**

| | | | | | |
|---|---|---|---|---|---|
| 1 | Project Name | 24x40 (PC #04-122454) | | | |
| 2 | Run Title | Title 24 Analysis | | | |
| 3 | Project Location | Classroom Buildings | | | |
| 4 | City | Blue Canyon | 5 | Standards Version | Compliance 2022 |
| 6 | Zip code | 99999 | 7 | Compliance Software (version) | EnergyPro 9.2 |
| 8 | Climate Zone | 16 | 9 | Building Orientation (deg) | 165 |
| 10 | Building Type(s) | • Nonresidential | 11 | Weather File | BLUE-CANYON_STYP20.epw |
| 12 | Project Scope | • New complete scope | 13 | Number of Dwelling Units | 0 |
| 14 | Total Conditioned Floor Area in Scope ($ft^2$) | 960 | 15 | Total # of hotel/motel rooms | 0 |
| 16 | Total Unconditioned Floor Area ($ft^2$) | 0 | 17 | Fuel Type | Natural gas |
| 18 | Nonresidential Conditioned Floor Area | 960 | 19 | Total # of Stories (Habitable Above Grade) | 1 |
| 20 | Residential Conditioned Floor Area | 0 | | | |



| CERTIFICATE OF COMPLIANCE - NONRESIDENTIAL PERFORMANCE COMPLIANCE METHOD | NRCC-PRF-E |
|---|---|
| Nonresidential Performance Compliance Method | (Page 2 of 18) |

**B. PROJECT SUMMARY**

*Table B shows which building components are included in the performance calculation. If indicated as not included, the project must show compliance prescriptively if within the permit application.*

| Building Components Complying via Performance | | | | | | Building Components Complying Prescriptively | |
|---|---|---|---|---|---|---|---|
| Envelope (See Table G) | Nonres | Performance | Solar Thermal Water Heating (See Table I3) | ☐ | Performance | The following building components are ONLY eligible for prescriptive compliance and should be documented on the NRCC form listed if within the scope of the permit application (i.e. compliance will not be shown on the NRCC-PRF-E). | |
| | MultiFam | Not Included | | ☒ | Not Included | | |
| Mechanical (See Table H) | Nonres | Performance | Covered Process: Commercial Kitchens (see Table J) | ☐ | Performance | Indoor Lighting (Unconditioned) 140.6 & 170.2(e) | NRCC-LTI-E is required |
| | MultiFam | Not Included | | ☒ | Not Included | Outdoor Lighting 140.7 & 170.2(e) | NRCC-LTO-E is required |
| Domestic Hot Water (See Table I) | Nonres | Not Included | Covered Process: Laboratory Exhaust (see Table J) | ☐ | Performance | Sign Lighting 140.8 & 170.2(e) | NRCC-LTS-E is required |
| | MultiFam | Not Included | | ☒ | Not Included | **Building Components Complying with Mandatory Measures** | |
| Lighting (Indoor Conditioned, see Table K) | Nonres | Performance | Photovoltaics (see Table F) | ☐ | Performance | Electrical power systems, commissioning, solar ready, elevator and escalator requirements are mandatory and should be documented on the NRCC form listed if applicable (i.e. compliance will not be shown on the NRCC-PRF-E.) | |
| | MultiFam | Not Included | | ☒ | Not Included | Electrical Power Distribution 110.11 | NRCC-ELC-E is required |
| | | | Battery (see Table F) | ☐ | Performance | Commissioning 120.8 | NRCC-CXR-E is required |
| | | | | ☒ | Not Included | Solar and Battery 110.10 | NRCC-SAB-E is required |



| CERTIFICATE OF COMPLIANCE - NONRESIDENTIAL PERFORMANCE COMPLIANCE METHOD | NRCC-PRF-E |
|---|---|
| Nonresidential Performance Compliance Method | (Page 3 of 18) |

**C1. COMPLIANCE SUMMARY**

| COMPLIES[3] | | | |
|---|---|---|---|
| | Time Dependent Valuaton (TDV) | | Source Energy Use |
| | Efficiency[1] ($kBtu/ft^2$ - yr) | Total[2] ($kBtu/ft^2$ - yr) | Total[2] ($kBtu/ft^2$ - yr) |
| Standard Design | 328.46 | 328.46 | 54.52 |
| Proposed Design | 308.4 | 308.4 | 39.8 |
| **Compliance Margins** | **20.06** | **20.06** | **14.72** |
| | **Pass** | **Pass** | **Pass** |

*[1] Efficiency measures include improvements like a better building envelope and more efficient equipment*
*[2] Compliance Totals include efficiency, photovoltaics and batteries*
*[3] New Construction, Complete Addition Scope: Building complies when all efficiency and total compliance margins are greater than or equal to zero and unmet load hour limits are not exceeded*
*Existing, Addition and Alteration Scope: Building complies when efficiency compliance margin is greater than or equal to zero and unmet load hour limits are not exceeded*



| CERTIFICATE OF COMPLIANCE - NONRESIDENTIAL PERFORMANCE COMPLIANCE METHOD | NRCC-PRF-E |
|---|---|
| Nonresidential Performance Compliance Method | (Page 4 of 18) |

**C2. TDV ENERGY COMPLIANCE RESULTS FOR PERFORMANCE COMPONENTS (Annual TDV Energy Use, $kBtu/ft^2$ - yr)**

COMPLIES[2]

| Energy Component | Standard Design (TDV) | Proposed Design (TDV) | Compliance Margin (TDV)[1] |
|---|---|---|---|
| Space Heating | 67.19 | 128.46 | -61.27 |
| Space Cooling | 20.52 | 20.33 | 0.19 |
| Indoor Fans | 178.68 | 92.36 | 86.32 |
| Heat Rejection | 0 | 0 | 0 |
| Pumps & Misc. | 0 | 0 | 0 |
| Domestic Hot Water | 36.19 | 36.19 | 0 |
| Indoor Lighting | 25.88 | 31.06 | -5.18 |
| Flexibility | --- | --- | --- |
| **EFFICIENCY COMPLIANCE TOTAL** | **328.46** | **308.4** | **20.06 (6.1%)** |
| Photovoltaics | --- | --- | --- |
| Batteries | --- | --- | --- |
| **TOTAL COMPLIANCE** | **328.46** | **308.4** | **20.06 (6.1%)** |

*[1] Notes: This number in parenthesis following the Compliance Margin in column 4, represents the Percent Better than Standard.*



| CERTIFICATE OF COMPLIANCE - NONRESIDENTIAL PERFORMANCE COMPLIANCE METHOD | NRCC-PRF-E |
|---|---|
| Nonresidential Performance Compliance Method | (Page 5 of 18) |

**C3. TDV ENERGY RESULTS FOR NON-REGULATED COMPONENTS[1]**

| Non-Regulated Energy Component | Standard Design (TDV) | Proposed Design (TDV) | Compliance Margin (TDV)[1] |
|---|---|---|---|
| Receptacle | 63.66 | 63.66 | --- |
| Process | --- | --- | --- |
| Other Ltg | --- | --- | --- |
| Process Motors | --- | --- | --- |
| **TOTAL (TOTAL COMPLIANCE + NON-REGULATED COMPONENTS)** | **392.12** | **372.06** | **20.06 (5.1%)** |

*[1] Notes: This table is not used for Energy Code Compliance.*



| CERTIFICATE OF COMPLIANCE - NONRESIDENTIAL PERFORMANCE COMPLIANCE METHOD | NRCC-PRF-E |
|---|---|
| Nonresidential Performance Compliance Method | (Page 6 of 18) |

**C4. SOURCE ENERGY COMPLIANCE RESULTS FOR PERFORMANCE COMPONENTS (Annual SOURCE Energy Use, $kBtu/ft^2$ /yr)**

COMPLIES[2]

| Energy Component | Standard Design (SOURCE) | Proposed Design (SOURCE) | Compliance Margin (SOURCE)[1] |
|---|---|---|---|
| Space Heating | 20.32 | 13.48 | 6.84 |
| Space Cooling | 1.36 | 1.35 | 0.01 |
| Indoor Fans | 17.66 | 9.36 | 8.3 |
| Heat Rejection | 0 | 0 | 0 |
| Pumps & Misc. | 0 | 0 | 0 |
| Domestic Hot Water | 13.04 | 13.04 | 0 |
| Indoor Lighting | 2.14 | 2.57 | -0.43 |
| Flexibility | --- | --- | --- |
| **EFFICIENCY COMPLIANCE TOTAL** | **54.52** | **39.8** | **14.72 (27%)** |
| Photovoltaics | --- | --- | --- |
| Batteries | --- | --- | --- |
| **TOTAL COMPLIANCE** | **54.52** | **39.8** | **14.72 (27%)** |

*[1] Notes: This number in parenthesis following the Compliance Margin in column 4, represents the Percent Better than Standard.*



| CERTIFICATE OF COMPLIANCE - NONRESIDENTIAL PERFORMANCE COMPLIANCE METHOD | NRCC-PRF-E |
|---|---|
| Nonresidential Performance Compliance Method | (Page 7 of 18) |

**C5. SOURCE ENERGY RESULTS FOR NON-REGULATED COMPONENTS[1]**

| Non-Regulated Energy Component | Standard Design (SOURCE) | Proposed Design (SOURCE) | Compliance Margin (SOURCE)[1] |
|---|---|---|---|
| Receptacle | 4.92 | 4.92 | --- |
| Process | --- | --- | --- |
| Other Ltg | --- | --- | --- |
| Process Motors | --- | --- | --- |
| **TOTAL ( TOTAL COMPLIANCE + NON-REGULATED COMPONENTS)** | **59.44** | **44.72** | **14.72 (24.8%)** |

*[1] Notes: This table is not used for Energy Code Compliance.*

**C6. 'ABOVE CODE' QUALIFICATIONS**

☐ This project is pursuing CalGreen Tier 1 ☐ This project is pursuing CalGreen Tier 2



| CERTIFICATE OF COMPLIANCE - NONRESIDENTIAL PERFORMANCE COMPLIANCE METHOD | NRCC-PRF-E |
|---|---|
| Nonresidential Performance Compliance Method | (Page 8 of 18) |

**C7. ENERGY USE SUMMARY**

| Energy Component | Standard Design Site (MWh) | Proposed Design Site (MWh) | Margin (MWh) | Standard Design Site (MBtu) | Proposed Design Site (MBtu) | Margin (MBtu) |
|---|---|---|---|---|---|---|
| Space Heating | 0.3 | 3.2 | -2.9 | 20 | --- | --- |
| Space Cooling | 0.8 | 0.8 | 0 | --- | --- | --- |
| Indoor Fans | 6 | 3.1 | 2.9 | --- | --- | --- |
| Heat Rejection | --- | --- | --- | --- | --- | --- |
| Pumps & Misc. | --- | --- | --- | --- | --- | --- |
| Domestic Hot Water | --- | --- | --- | 13.6 | 13.6 | 0 |
| Indoor Lighting | 1 | 1.2 | -0.2 | --- | --- | --- |
| Flexibility | --- | --- | --- | --- | --- | --- |
| **EFFICIENCY TOTAL** | **8.1** | **8.3** | **-0.2** | **33.6** | **13.6** | **20** |
| Photovoltaics | --- | --- | --- | --- | --- | --- |
| Batteries | --- | --- | --- | --- | --- | --- |
| **ENERGY USE SUBTOTAL** | **8.1** | **8.3** | **-0.2** | **33.6** | **13.6** | **20** |
| Receptacle | 2.5 | 2.5 | 0 | --- | --- | --- |
| Process | --- | --- | --- | --- | --- | --- |
| Other Ltg | --- | --- | --- | --- | --- | --- |
| Process Motors | --- | --- | --- | --- | --- | --- |
| **ENERGY USE TOTAL** | **10.6** | **10.8** | **-0.2** | **33.6** | **13.6** | **20** |



| CERTIFICATE OF COMPLIANCE - NONRESIDENTIAL PERFORMANCE COMPLIANCE METHOD | NRCC-PRF-E |
|---|---|
| Nonresidential Performance Compliance Method | (Page 9 of 18) |

**C8. ENERGY USE INTENSITY (EUI)**

| | Standard Design ($kBtu/ft^2$ / yr) | Proposed Design ($kBtu/ft^2$ / yr) | Margin ($kBtu/ft^2$ / yr) | Margin Percentage |
|---|---|---|---|---|
| GROSS EUI[1] | 72.67 | 52.55 | 20.12 | 27.69 |
| NET EUI[1] | 72.67 | 52.55 | 20.12 | 27.69 |

*[1] Notes: Gross EUI is Energy Use Total (not including PV)/Total Building Area. Net EUI is Energy Use Total (including PV)/Total Building Area.*

**D1. EXCEPTIONAL CONDITIONS**

- The project uses the Simplified Geometry Performance Modeling Approach which is not capable of modeling daylighting controls and assumes the prescriptive Secondary Daylit Control requirements are met. PRESCRIPTIVE COMPLIANCE documentation (form NRCC-LTI-02-E) for the requirements of section 140.6(d) Automatic Daylighting Controls in Secondary Daylit Zones is required.
- The building does not include service water heating. Verify that service water heating is not required and is not included in the design.
- PV/Battery Building Type has been modified from software defaults for one or more spaces. Review project's PV/Battery Building Type(s) with documentation author. Refer to Energy Code section 140.10 for Nonresidential or 170.2(g) for more information.

**G1. ENVELOPE GENERAL INFORMATION (conditioned spaces only)**

| 01 | 02 | 03 | 04 |
|---|---|---|---|
| Opaque Surfaces & Orientation | Total Gross Surface Area ($ft^2$) | Total Fenestration Area ($ft^2$) | Window to Wall Ratio (%) |
| North-Facing[1] | 252 | 32 | 12.7 |
| East-Facing[2] | 460 | 0 | 0 |
| South-Facing[3] | 252 | 32 | 12.7 |
| West-Facing[4] | 460 | 0 | 0 |
| **Total** | **1424** | **64** | **4.49** |

*Notes*
*[1]North-Facing is oriented to within 45 degrees of true north, including 45 00'00" east of north (NE), but excluding 45 00'00" west of north (NW),*
*[2]East-Facing is oriented to within 45 degrees of true east, including 45 00'00" south of east (SE), but excluding 45 00'00" north of east (NE),*
*[3]South-Facing is oriented to within 45 degrees of true south, including 45 00'00" west of south (SW), but excluding 45 00'00" east of south (SE),*
*[4]West-Facing is oriented to within 45 degrees of true west, including 45 00'00" north of west (NW), but excluding 45 00'00" south of west (SW),*



STATE AGENCY APPROVAL

IDENTIFICATION STAMP
DIV. OF THE STATE ARCHITECT
APP. 04-124098 INC:
REVIEWED FOR
SS ☑ FLS ☑ ACS ☑
DATE: 11/14/24

SKC COMPANY
15345 FAIRFIELD RANCH ROAD, SUITE #160, CHINO, CA 91709
OFFICE: (909) 740-3120, FAX: (909) 726-9470
WEBSITE: WWW.SKCCOMPANY.COM
MANUFACTURER #MF1279666 DEALER # DL1279666
GC LIC # 992118 SBE CERTIFIED

ALL DESIGNS INDICATED ON THESE PLANS/DRAWINGS ARE PROPERTY OF SKC, INC AND ARE FOR THE USE BY SKC IN THE SPECIFIED JOB ONLY. THEY SHALL NOT BE USED AND/OR DUPLICATED OR TRANSMITTED IN ANY FORM, FOR ANY PURPOSE WITHOUT THE PRIOR WRITTEN CONSENT OF SKC, INC. ANY UNAUTHORIZED USE OF THESE PLANS SHALL SUBJECT THE OWNER OF SAID PROPERTY TO LIQUIDATED DAMAGES OF $75,000.00. THESE PLANS ARE PROTECTED UNDER THE PROVISIONS OF THE 1976 COPYRIGHT ACT COPYRIGHT SKC, © ALL RIGHTS RESERVED.

DISTRICT/CUSTOMER NAME: NEXTMOD

SCHOOL/SITE NAME: STOCKPILE

SHEET TITLE:
PC TITLE 24 REPORT
WORST CASE SCENARIO
(PERFORMANCE RUN)

PRE-CHECK (PC) DOCUMENT
CODE: 2022 CBC
A SEPARATE PROJECT APPLICATION FOR CONSTRUCTION IS REQUIRED

APPROVED
DIV. OF THE STATE ARCHITECT
APP: 04-122454 PC
REVIEWED FOR
SS ☑ FLS ☑ ACS ☑ CG ☑
DATE: 11/14/2023

PROFESSIONAL OF RECORD ON PC

ORION
Structural Engineering, Inc.
11305 RANCHO BERNARDO RD
SUITE 121
SAN DIEGO CA. 92127
PHONE (858) 679-1974

REGISTERED PROFESSIONAL ENGINEER
RYAN J. OVER
No. S 4437
EXP. 12/31/24
STRUCTURAL
STATE OF CALIFORNIA

FIRM: Orion Structural Engineering, Inc.
ADDRESS: 11305 Rancho Bernardo Road Ste 121
CITY: San Diego, CA
PHONE: 858-679-1974

PROJECT SPECIFIC PROFESSIONAL OF RECORD

FIRM:
ADDRESS:
CITY:
PHONE:

REVISIONS

1 -
2 -
3 -
4 -
5 -

| | |
|---|---|
| PROJECT NO.: | 00-0000 |
| DRAFTER: | 00 |
| SCALE: | AS NOTED |
| DATE: | 00-00-00 |

SHEET NUMBER

# M3.0

10/31/2023 12:10:06 PM

**G1. ENVELOPE GENERAL INFORMATION (conditioned spaces only)**

| 01 | 02 | 03 | 04 |
|---|---|---|---|
| Opaque Surfaces & Orientation | Total Gross Surface Area (ft²) | Total Fenestration Area (ft²) | Window to Wall Ratio (%) |
| Roof | 960 | 16 | 1.67 |

*Notes*
*[1]North-Facing is oriented to within 45 degrees of true north, including 45 00'00" east of north (NE), but excluding 45 00'00" west of north (NW),*
*[2]East-Facing is oriented to within 45 degrees of true east, including 45 00'00" south of east (SE), but excluding 45 00'00" north of east (NE),*
*[3]South-Facing is oriented to within 45 degrees of true south, including 45 00'00" west of south (SW), but excluding 45 00'00" east of south (SE),*
*[4]West-Facing is oriented to within 45 degrees of true west, including 45 00'00" north of west (NW), but excluding 45 00'00" south of west (SW),*

**G4. NONRESIDENTIAL AIR BARRIER**

| 01 | 02 |
|---|---|
| Building Story Name | Air Barrier |
| Com-Floor 1 | No air barrier |





**G5. OPAQUE SURFACE ASSEMBLY SUMMARY**

| 01 | 02 | 03 | 04 | 05 | 06 | | 07 | 08 | 09 | 10 |
|---|---|---|---|---|---|---|---|---|---|---|
| Surface Name | Construction Type | Area (ft²) | Framing Type | Cavity R-Value | Continuous R-Value | | Units | Value | Description of Assembly Layers | Status[1] |
| | | | | | Interior | Exterior | | | | |
| R-21 Wood Studs7 | Exterior Wall | 1,424 | Wood | 21 | N/A | N/A | U-factor | 0.0652 | Stucco - 7/8 in.<br>Vapor permeable felt - 1/8 in.<br>Plywood - 1/2 in.<br>Composite-1<br>Gypsum Board - 1/2 in. | N |
| R-38 Single Ply Roof w/ 316 | Roof | 960 | Metal | 38 | N/A | 18.64 | U-factor | 0.0271 | Single Ply Roofing - 1/4 in.<br>Expanded Polystyrene - EPS - 1/4 in. R1<br>Cellular polyisocyanurate (unfaced) - 3 in. R18<br>Vapor permeable felt - 1/8 in.<br>Plywood - 3/4 in.<br>Composite-2 | N |
| 3.5 Conc Flr With R-1922 | Exterior Floor | 960 | Metal | 19 | N/A | N/A | U-factor | 0.054 | Carpet - 3/4 in.<br>Composite-3<br>Vented Crawl Space | N |

*[1] Status: N - New, A - Altered, E - Existing*

**G6A. OPAQUE DOOR SUMMARY (NONRESIDENTIAL)**

| 01 | 02 | 03 | 04 |
|---|---|---|---|
| Assembly Name | Area (ft²) | Overall U-factor | Status[1] |
| Hollow Metal Door12 | 42 | 0.7 | N |

*[1] Status: N - New, A - Altered, E - Existing*





**G7A. FENESTRATION ASSEMBLY SUMMARY (NONRESIDENTIAL)**

| 01 | 02 | 03 | 04 | 05 | 06 | 07 | 08 | 09 |
|---|---|---|---|---|---|---|---|---|
| Fenestration Assembly Name | Fenestration Type/ Product Type / Frame Type | Certification Method[1] | Assembly Method | Area (ft²) | Overall U-factor | Overall SHGC | Overall VT | Status[2] |
| Double Metal Tinted | Vertical fenestration<br>Operable window<br>Metal | Default 110.6 | Manufactured | 64 | 0.79 | 0.59 | 0.67 | N |
| Double Non Metal Clear | Skylight<br>Fixed window<br>N/A | NFRC | Manufactured | 16 | 0.18 | 0.7 | 0.5 | N |

*[1] Notes: Newly installed fenestration shall have a certified NFRC Label Certificate or use the CEC default tables found in Table 110.6-A and Table 110.6-B. Center of Glass (COG) values are for the glass-only, determined by the manufacturer, and are shown for ease of verification. Site-built fenestration values are calculated per Nonresidential Appendix NA6 and are used in the analysis.*
*[2] Status: N - New, A - Altered, E - Existing*

**H1. DRY SYSTEM EQUIPMENT (FURNACES, AIR HANDLING UNITS, HEAT PUMPS, VRF, ECONOMIZERS ETC.)**

| 01 | 02 | 03 | 04 | 05 | 06 | 07 | 08 | 09 | 10 | 11 | 12 |
|---|---|---|---|---|---|---|---|---|---|---|---|
| Equipment Name | Equipment Type | Qty | Heating | | | | Cooling | | | Economizer Type (if present) | Status[1] |
| | | | Total Heating Output (kBtu/h) | Supp Heat Output (kBtu/h) | Efficiency Unit | Efficiency | Total Cooling Output (kBtu/h) | Efficiency Unit | Efficiency | | |
| HP_3 | Single Package VHP Air System | 1 | 40.62 | 17.06 | COP | 3.3 | 40.33 | EER | 11 | Differential DB | N |

*[1] Status: N - New, A - Altered, E - Existing*





**H3. NONRESIDENTIAL / COMMON USE AREA FAN SYSTEMS SUMMARY**

| 01 | 02 | 03 | 04 | 05 | 06 | 07 | 08 | 09 | 10 | 11 | 12 | 13 |
|---|---|---|---|---|---|---|---|---|---|---|---|---|
| Name or Item Tag | Qty | Design OA CFM | Supply Fan | | | | Return / Relief Fan | | | | | Status[1] |
| | | | CFM | Power | Power Units | Control | Fan Type | CFM | Power | Power Units | Control | |
| HP_3 | 1 | 364.8 | 1,350 | 0.5 | BHP | Constant Vol | N/A | N/A | N/A | N/A | N/A | N |

*[1] Status: N - New, A - Altered, E - Existing*

**H5. GENERAL EXHAUST FAN SUMMARY**

| 01 | 02 | 03 | 04 | 05 | 06 | 07 | 08 |
|---|---|---|---|---|---|---|---|
| System ID | Zone Name | Qty | CFM | Power | Power Units | Continuous Operation? | Status[1] |
| All Zones1 | 1-All Zones | 1 | 80 | 0.04 | BHP | No | N |

*[1] Status: N - New, A - Altered, E - Existing*

**H8. SYSTEM SPECIAL FEATURES**

| 01 | 02 | 03 | 04 |
|---|---|---|---|
| System Name | Equipment Type | Interlocks per 140.4(n)[1] | Other Special Features and Controls |
| HP_3 | Single Package VHP Air System | No | Zone(s) With CO2 Sensor Vent. Control<br>Differential DB |

*Notes: This table includes controls related to the performance path only. For projects using the prescriptive path, mandatory and prescriptive controls requirements are documented on the NRCC-MCH-E.*
*[1] Yes = interlocks are provided, No = interlocks are not provided, NA means no operable openings.*





**H9. NONRESIDENTIAL / COMMON USE AREA & HOTEL/MOTEL VENTILATION**

| 01 | 02 | 03 | 04 | 05 | 06 | 07 |
|---|---|---|---|---|---|---|
| Zone Name | Mechanical Ventilation | | | | Conditioned Area (sf) | DCV or Occupant Sensor Controls, or Both |
| | Ventilation Function | # of People | Supply OA CFM | Exhaust CFM | | |
| 1-All Zones | Education - Lecture/postsecondary classroom | 24 | 364.8 | 80 | 960 | DCV |

**H11. ZONAL SYSTEM AND TERMINAL UNIT SUMMARY**

| 01 | 02 | 03 | 04 | 05 | 06 | 07 | 08 | 09 | 10 | 11 | 12 |
|---|---|---|---|---|---|---|---|---|---|---|---|
| System ID | System Type | Qty | Rated Capacity (kBtuh) | | Airflow (cfm) | | | Fan | | | VSD |
| | | | Heating | Cooling | Design | MIn. | Min. Ratio | Power | Power Units | Cycles | |
| 1-All Zones-Trm | Uncontrolled | 1 | N/A | N/A | 1,350 | N/A | 0 | N/A | N/A | N/A | ☐ |

**K1. INDOOR CONDITIONED LIGHTING GENERAL INFO**

| 01 | 02 | 03 | 04 | 05 | 06 |
|---|---|---|---|---|---|
| Occupancy Type[1] | Conditioned Floor Area[2] (ft²) | Installed Lighting Power (Watts) | Lighting Control Credits (Watts) | Additional (Custom) Allowance | |
| | | | | Area Category Footnotes (Watts) | Area Category Footnotes (Watts) |
| Classroom, Lecture, or Training Vocational | 960 | 576 | 0 | 0 | 0 |
| **Building Totals:** | **960** | **576** | **0** | **0** | **0** |

*[1]See Table 140.6-C*
*[2]See NRCC-LTI--E for unconditioned spaces*
*[3]Lighting information for existing spaces modeled is not included in this table*

**K4. INDOOR CONDITIONED LIGHTING MANDATORY LIGHTING CONTROL**





**Building Level Controls**

| 01 | 02 |
|---|---|
| Mandatory Demand Response 110.12(c) | Shut-Off Controls 130.1(c) & 160.5(b)4C |
| Required | Required |

**Area Level Controls (includes all lighting controls installed in conditioned space to meet mandatory requirements per 130.1)**

| 03 | 04 | 05 | 06 | 07 | 08 | 09 |
|---|---|---|---|---|---|---|
| Area Description | Area Category Primary Function Area | Area Controls 130.1(a) & 160.5(b)4A | Multi-Level Controls 130.1(b) & 160.5(b)4B | Shut-Off Controls 130.1(c) & 160.5(b)4C | Primary Daylighting 130.1(d) & 160.5(b)4D | Secondary Daylighting 140.5(d) & 160.5(b)4D |
| Whole Building | All Other Space Types | Required | Required | Required | Required | Required |

**L. DECLARATION OF REQUIRED CERTIFICATES OF INSTALLATION**

**Selections made by Documentation Author indicate which Certificates of Installation must be submitted for the features to be recognized for compliance. These documents must be retained and provided to the building inspector during construction and can be found online**

| Building Component | Form/Title |
|---|---|
| Envelope | NRCI-ENV-01-E - Must be submitted for all buildings |
| Envelope | NRCI-ENV-E - Envelope (for all buildings) |
| Mechanical | NRCI-MCH-01-E - Must be submitted for all buildings |
| Mechanical | NRCI-MCH-E - For all buildings with Mechanical Systems |
| Indoor Lighting | NRCI-LTI-01-E - Must be submitted for all buildings |
| Indoor Lighting | NRCI-LTI-E - Indoor Lighting (for all buildings) |
| Indoor Lighting | NRCI-LTI-05-E- Must be submitted for a Power Adjustment Factor (PAF) to be recognized for compliance. |

**M. DECLARATION OF REQUIRED CERTIFICATES OF ACCEPTANCE**

**Selections made by Documentation Author indicate which Certificates of Acceptance must be submitted for the features to be recognized for compliance. These documents must be provided to the building inspector during construction and must be completed through an Acceptance Test Technician Certification Provider (ATTCP).**

| Building Component | Form/Title |
|---|---|
| Envelope | NRCA-ENV-02-F - NRFC label verification for fenestration |
| Indoor Lighting | NRCA-LTI-02-A - Occupancy Sensors and Automatic Time Switch Controls. |
| Indoor Lighting | NRCA-LTI-03-A - Automatic Daylight Controls. |
| Mechanical | NRCA-MCH-02-A - Outdoor Air must be submitted for all newly installed HVAC units. Note: MCH-02-A can be performed in conjunction with MCH-07-A Supply Fan VFD Acceptance (if applicable) since testing activities overlap |





**M. DECLARATION OF REQUIRED CERTIFICATES OF ACCEPTANCE**

**Selections made by Documentation Author indicate which Certificates of Acceptance must be submitted for the features to be recognized for compliance. These documents must be provided to the building inspector during construction and must be completed through an Acceptance Test Technician Certification Provider (ATTCP).**

| Building Component | Form/Title |
|---|---|
| Mechanical | NRCA-MCH-05-A - Air Economizer Controls |
| Mechanical | NRCA-MCH-06-A Demand Control Ventilation Systems must be submitted for all systems required to employ demand controlled ventilation (refer to ) can vary outside ventilation flow rates based on maintaining interior carbon dioxide (CO2) concentration setpoints. |

**N. DECLARATION OF REQUIRED CERTIFICATES OF VERIFICATION**

**Selections made by Documentation Author indicate which Certificates of Verification must be submitted for the features to be recognized for compliance. These documents must be retained and provided to the building inspector during construction and can be found online**

**There are no Certificates of Verification applicable to this project**





**Documentation Author's Declaration Statement**

**1. I certify that this Certificate of Compliance documentation is accurate and complete.**

| | |
|---|---|
| Documentation Author Name: Jeffrey C. Chan-Lugay | Documentation Author Signature: Jeffrey C. Chan-Lugay |
| Company: SKC Company | Signature Date: 11/03/23 |
| Address: 15345 Fairfield Ranch Road, Suite #160 | CEA/HERS Certification Identification (if applicable): 992118 |
| City/State/Zip: Chino Hills, CA 91709 | Phone: (909) 740-3120 |

**Responsible Person's Declaration statement**

**I certify the following under penalty of perjury, under the laws of the State of California:**

1. The information provided on this Certificate of Compliance is true and correct.
2. I am eligible under Division 3 of the Business and Professions Code to accept responsibility for the building design or system design identified on this Certificate of Compliance (responsible designer)
3. The energy features and performance specifications, materials, components, and manufactured devices for the building design or system design identified on this Certificate of Compliance conform to the requirements of Title 24, Part 1 and Part 6 of the California Code of Regulations.
4. The building design features or system design features identified on this Certificate of Compliance are consistent with the information provided on other applicable compliance documents, worksheets, calculations, plans and specifications submitted to the enforcement agency for approval with this building permit application.
5. I understand that a registered copy of this Certificate of Compliance shall be made available with the building permit(s) issued for the building, and made available to the enforcement agency for all applicable inspections, and I will take the necessary steps to accomplish this requirement.
6. I understand that a registered copy of this Certificate of Compliance is required to be included with the documentation the builder provides to the building owner at occupancy, and I will take the necessary steps to accomplish these requirements.

| | | |
|---|---|---|
| Responsible Designer Name: Sean Khan | Responsible Designer Signature: Sean Khan | |
| Company: SKC Company | | |
| Address: 15345 Fairfield Ranch Road, Suite #160 | Date Signed: 11/03/23 | |
| City/State/Zip: Chino Hills, CA 91709 | License #: 992118 | |
| Phone: 909-740-3120 | Title: Executive VP | Scope: Lighting |

| | | |
|---|---|---|
| Responsible Designer Name: Sean Khan | Responsible Designer Signature: Sean Khan | |
| Company: SKC Company | | |
| Address: 15345 Fairfield Ranch Road, Suite #160 | Date Signed: 11/03/23 | |
| City/State/Zip: Chino Hills, CA 91709 | License #: 992118 | |
| Phone: 909-740-3120 | Title: Executive VP | Scope: Mechanical |





| | | |
|---|---|---|
| Responsible Designer Name: Sean Khan | Responsible Designer Signature: Sean Khan | |
| Company: SKC Company | | |
| Address: 15345 Fairfield Ranch Road, Suite #160 | Date Signed: 11/03/23 | |
| City/State/Zip: Chino Hills, CA 91709 | License #: 992118 | |
| Phone: 909-740-3120 | Title: Executive VP | Scope: Envelope |



STATE AGENCY APPROVAL

IDENTIFICATION STAMP
DIV. OF THE STATE ARCHITECT
APP. 04-124098 INC:
REVIEWED FOR
SS ☑ FLS ☑ ACS ☑
DATE: 11/14/24

SKC COMPANY
15345 FAIRFIELD RANCH ROAD, SUITE #160, CHINO, CA 91709
OFFICE: (909) 740-3120, FAX: (909) 726-9470
WEBSITE: WWW.SKCCOMPANY.COM
MANUFACTURER #MF1279666 DEALER # DL1279666
GC LIC # 992118 SBE CERTIFIED

ALL DESIGNS INDICATED ON THESE PLANS/DRAWINGS ARE PROPERTY OF SKC, INC AND ARE FOR THE USE BY SKC IN THE SPECIFIED JOB ONLY. THEY SHALL NOT BE USED AND/OR DUPLICATED OR TRANSMITTED IN ANY FORM, FOR ANY PURPOSE WITHOUT THE PRIOR WRITTEN CONSENT OF SKC, INC. ANY UNAUTHORIZED USE OF THESE PLANS SHALL SUBJECT THE OWNER OF SAID PROPERTY TO LIQUIDATED DAMAGES OF $75,000.00. THESE PLANS ARE PROTECTED UNDER THE PROVISIONS OF THE 1976 COPYRIGHT ACT COPYRIGHT SKC, © ALL RIGHTS RESERVED.

DISTRICT/CUSTOMER NAME: NEXTMOD

SCHOOL/SITE NAME: STOCKPILE

SHEET TITLE:
PC TITLE 24 REPORT
WORST CASE SCENARIO
(PERFORMANCE RUN)

PRE-CHECK (PC) DOCUMENT
CODE: 2022 CBC
A SEPARATE PROJECT APPLICATION FOR CONSTRUCTION IS REQUIRED

APPROVED
DIV. OF THE STATE ARCHITECT
APP: 04-122454 PC
REVIEWED FOR
SS ☑ FLS ☑ ACS ☑ CG ☑
DATE: 11/14/2023

PROFESSIONAL OF RECORD ON PC

ORION
Structural Engineering, Inc.
11305 RANCHO BERNARDO RD
SUITE 121
SAN DIEGO CA. 92127
PHONE (858) 679-1974

REGISTERED PROFESSIONAL ENGINEER
RYAN J. OVER
No. S 4437
EXP. 12/31/24
STRUCTURAL
STATE OF CALIFORNIA

FIRM: Orion Structural Engineering, Inc.
ADDRESS: 11305 Rancho Bernardo Road Ste 121
CITY: San Diego, CA
PHONE: 858-679-1974

PROJECT SPECIFIC PROFESSIONAL OF RECORD

FIRM:
ADDRESS:
CITY:
PHONE:

REVISIONS

1 -
2 -
3 -
4 -
5 -

| | |
|---|---|
| PROJECT NO.: | 00-0000 |
| DRAFTER: | 00 |
| SCALE: | AS NOTED |
| DATE: | 00-00-00 |

SHEET NUMBER

M3.1

10/31/2023 12:10:42 PM

STATE OF CALIFORNIA

## Nonresidential Building Commissioning

CALIFORNIA ENERGY COMMISSION

| CERTIFICATE OF COMPLIANCE | | | NRCC-CXR-E |
|---|---|---|---|
| *This document is used to demonstrate compliance with mandatory commissioning requirements in 120.8 for nonresidential buildings and hotel/motel or mixed-use buildings with nonresidential spaces. This document does not demonstrate compliance with commissioning requirements within Title 24, Part 11, which need to be documented separately if they apply.* | | | |
| **Project Name:** 24'x40' (PC #04-122454) Wall HVAC | | **Report Page:** | **(Page 1 of 6)** |
| **Project Address:** | Classroom Buildings | **Date Prepared:** | 11/3/2023 |

| A. GENERAL INFORMATION | | | | | |
|---|---|---|---|---|---|
| 01 | Project Location (city) | Blue Canyon | 04 | Building Size ($ft^2$) | 960 |
| 02 | Occupancy Type | Nonresidential | 05 | | < 10,000 $ft^2$ |
| 03 | Project Type | Newly constructed | 06 | | Unitary or packaged equipment each serving one zone |
| | | | 07 | Climate Zone | 16 |

| B. PROJECT SCOPE | | | |
|---|---|---|---|
| *Based on project information provided in Table A, Table B indicates which commissioning related requirements apply per 120.8. Table B is not editable by the user.* | | | |
| **Commissioning Requirements per 120.8** | | | |
| 01 | Table F: Design Review Kickoff | 120.8(d)1 and 120.8(d)2 | The design review kickoff meeting establishes who will play the role of the design reviewer, the project schedule and identify owner's requirements. This meeting should be conducted during schematic design. |
| 02 | Table G: Owner's Project Requirements (OPR) | 120.8(b) | This requirement does not apply. |
| 03 | Table H: Basis of Design (BOD) | 120.8(c) | This requirement does not apply. |
| 04 | Table I: Design Review | 120.8(d) and 120.8(e) | The design reviewer(s) reviews the construction documents for clarity, completeness, and adherence to the owner's goals. Commissioning measures must be included in the construction documents to facilitate the design review and commissioning process. For projects with >= 10,000 $ft^2$ of nonresidential conditioned floor area, the design review is for adherence with the Owner's Project Requirements (OPR) and Basis of Design (BOD). This should be conducted during design. |
| 05 | Table J: Commissioning Plan | 120.8(f) | This requirement does not apply. |
| 06 | Table K: Functional Performance Testing | 120.8(g) | This requirement does not apply. |
| 07 | Table L: Documentation and Training | 120.8(h) | This requirement does not apply. |
| 08 | Table M: Commissioning Report | 120.8(i) | This requirement does not apply. |



STATE OF CALIFORNIA

## Nonresidential Building Commissioning

CALIFORNIA ENERGY COMMISSION

| CERTIFICATE OF COMPLIANCE | | NRCC-CXR-E |
|---|---|---|
| **Project Name:** 24'x40' (PC #04-122454) Wall HVAC | **Report Page:** | **(Page 2 of 6)** |
| | **Date Prepared:** | 11/3/2023 |

**C. COMPLIANCE RESULTS**

*Table C will indicate if the project data input into the compliance document is compliant with commissioning requirements per 120.8. This table is not editable by the user. If any cell on this table says "DOES NOT COMPLY" or "COMPLIES with Exceptional Conditions" refer to Table D. for guidance.*

| 01 | 02 | 03 | 04 | 05 | 06 | 07 | 08 | 09 |
|---|---|---|---|---|---|---|---|---|
| Design Kickoff Review | Owner's Project Requirements | Basis of Design | Design Review | Commissioning Plan | Functional Performance Testing | Documentation and Training | Commissioning Report | |
| Table F | Table G | Table H | Table I | Table J | Table K | Table L | Table M | |
| Yes | Yes | | | | | | | COMPLIES |
| 10 | | | | | | | | COMPLIES |

**D. EXCEPTIONAL CONDITIONS**

*This table is auto-filled with uneditable comments because of selections made or data entered in tables throughout the form.*

**E. ADDITIONAL REMARKS**

*This table includes remarks made by the permit applicant to the Authority Having Jurisdiction.*



STATE OF CALIFORNIA

## Nonresidential Building Commissioning

CALIFORNIA ENERGY COMMISSION

| CERTIFICATE OF COMPLIANCE | | NRCC-CXR-E |
|---|---|---|
| **Project Name:** 24'x40' (PC #04-122454) Wall HVAC | **Report Page:** | **(Page 3 of 6)** |
| | **Date Prepared:** | 11/3/2023 |

**F. DESIGN REVIEW KICKOFF MEETING**

*This table indicates that the design reviewer meets the qualification requirements per Title 24, Part 1 Section 10-103(a)1 and demonstrates compliance with design review kickoff requirements per 120.8(d)2. This meeting should occur during the Schematic Design phase of the project.*

**Design Review Kickoff Meeting Details**

| | | | | |
|---|---|---|---|---|
| 01 | Date of Design Review Kickoff Meeting | | | 0001-01-01 |
| 02 | Meeting Attendees: (one person may play multiple roles) | | | |
| ☐ | Owner/Facility Manager: | | ☒ Design Reviewer(s) | Designer |
| ☐ | Project Manager: | | ☐ Design Architect/ Engineer(s): | |
| ☐ | Contractor: | | ☐ Certified Acceptance Test Tech(s): | |
| ☐ | Commissioning Provider: | | ☐ Energy/ T24 Part 6 Consultant: | |

**Design Reviewer Qualifications per Title 24 Part 1 Section 10-103(a)1**

| | | | |
|---|---|---|---|
| | The design reviewer(s) must be licensed professional engineers or licensed architects, or licensed contractors representing services performed by or under the direct supervision of a licensed engineer or architect, as specified in the provisions of Division 3 of the Business and Professions Code. | Do the Design Reviewer(s) meet these qualifications? | |
| 03 | In addition, for buildings with >= 10,000 $ft^2$ but < 50,000$^2$, the design reviewer(s) shall be a qualified in-house engineer or architect with no other project involvement or a third party engineer, architect, or contractor | Yes ● | No ○ |
| 04 | The design reviewer(s) for this project will be: | Designer | |

**Preliminary Construction Schedule**

| | | Start Date | Completion Date |
|---|---|---|---|
| 05 | Schematic Design | 0001-01-01 | 0001-01-01 |
| 06 | Design Development | 0001-01-01 | 0001-01-01 |
| 07 | Construction Documents | 0001-01-01 | 0001-01-01 |
| 08 | Construction | 0001-01-01 | 0001-01-01 |
| 09 | Building Turnover | 0001-01-01 | 0001-01-01 |

**Project Goals Related to Energy Efficiency**

| | | |
|---|---|---|
| 10 | Operational Costs | |
| 11 | Desired Building Lifespan | |
| 12 | Equipment Lifecycle | |
| 13 | Project Energy Efficiency Goals | |



STATE OF CALIFORNIA

## Nonresidential Building Commissioning

CALIFORNIA ENERGY COMMISSION

| CERTIFICATE OF COMPLIANCE | | NRCC-CXR-E |
|---|---|---|
| **Project Name:** 24'x40' (PC #04-122454) Wall HVAC | **Report Page:** | **(Page 4 of 6)** |
| | **Date Prepared:** | 11/3/2023 |

**F. DESIGN REVIEW KICKOFF MEETING**

| | | |
|---|---|---|
| 14 | Envelope Goals | |
| 15 | HVAC System Goals | |
| 16 | Indoor Lighting System Goals | |
| 17 | Outdoor Lighting System Goals | |
| 18 | Water Heating System Goals | |
| 19 | Equipment and System Specifications | |
| 20 | Operations and Maintenance | |

**G. OWNER'S PROJECT REQUIREMENTS (OPR)**

*This section does not apply to this project.*

**H. BASIS OF DESIGN (BOD)**

*This section does not apply to this project.*

**I. CONSTRUCTION DOCUMENT DESIGN REVIEW CHECKLIST**

*This table is only completed if a design review document is not attached to permit application to demonstrate compliance with 120.8(b) and 120.8(e). For buildings with >= 10,000 $ft^2$ conditioned floor area, the design review will ensure the construction documents meet the Owner's Project Requirements (Table G.) and the Basis of Design Documents (Table H.). For buildings with < 10,000 $ft^2$ conditioned floor area, the design review will ensure the construction documents meet the goals documented in Table F. during the Design Review Kickoff.*

| | | YES | NO |
|---|---|---|---|
| 01 | Attaching Completed Design Review Documentation? | ● | ○ |

**J. COMMISSIONING PLAN**

*This section does not apply to this project.*



STATE OF CALIFORNIA

## Nonresidential Building Commissioning

CALIFORNIA ENERGY COMMISSION

| CERTIFICATE OF COMPLIANCE | | NRCC-CXR-E |
|---|---|---|
| **Project Name:** 24'x40' (PC #04-122454) Wall HVAC | **Report Page:** | **(Page 5 of 6)** |
| | **Date Prepared:** | 11/3/2023 |

**K. FUNCTIONAL PERFORMANCE TESTING**

*This section does not apply to this project.*

**L. DOCUMENTATION AND TRAINING**

*This section does not apply to this project.*

**M. COMMISSIONING REPORT**

*This section does not apply to this project.*

**N. DECLARATION OF REQUIRED CERTIFICATES OF INSTALLATION**

*There are no forms required for this project.*

**O. DECLARATION OF REQUIRED CERTIFICATES OF ACCEPTANCE**

*There are no forms required for this project.*



STATE OF CALIFORNIA

## Nonresidential Building Commissioning

CALIFORNIA ENERGY COMMISSION

| CERTIFICATE OF COMPLIANCE | | | NRCC-CXR-E |
|---|---|---|---|
| **Project Name:** 24'x40' (PC #04-122454) Wall HVAC | | **Report Page:** | **(Page 6 of 6)** |
| **Project Address:** | Classroom Buildings | **Date Prepared:** | 11/3/2023 |

**DOCUMENTATION AUTHOR'S DECLARATION STATEMENT**

**I certify that this Certificate of Compliance documentation is accurate and complete.**

| | |
|---|---|
| Documentation Author Name: Jeffrey C. Chan-Lugay | Documentation Author Signature: Jeffrey C. Chan-Lugay |
| Company: SKC Company | Signature Date: 11/03/23 |
| Address: 15345 Fairfield Ranch Road, Suite #160 | CEA/ HERS Certification Identification (if applicable): 992118 |
| City/State/Zip: Chino Hills CA 91709 | Phone: (909) 740-3120 |

**RESPONSIBLE PERSON'S DECLARATION STATEMENT**

I certify the following under penalty of perjury, under the laws of the State of California:

1. The information provided on this Certificate of Compliance is true and correct.
2. I am eligible under Division 3 of the Business and Professions Code to accept responsibility for the building design or system design identified on this Certificate of Compliance (responsible designer)
3. The energy features and performance specifications, materials, components, and manufactured devices for the building design or system design identified on this Certificate of Compliance conform to the requirements of Title 24, Part 1 and Part 6 of the California Code of Regulations.
4. The building design features or system design features identified on this Certificate of Compliance are consistent with the information provided on other applicable compliance documents, worksheets, calculations, plans and specifications submitted to the enforcement agency for approval with this building permit application.
5. I will ensure that a completed signed copy of this Certificate of Compliance shall be made available with the building permit(s) issued for the building, and made available to the enforcement agency for all applicable inspections. I understand that a completed signed copy of this Certificate of Compliance is required to be included with the documentation the builder provides to the building owner at occupancy.

| | |
|---|---|
| Responsible Designer Name: Sean Khan | Responsible Designer Signature: Sean Khan |
| Company: SKC Company | Date Signed: 2023-11-03 |
| Address: 15345 Fairfield Ranch Road, Suite #160 | License: 992118 |
| City/State/Zip: Chino Hills CA 91709 | Phone: 909-740-3120 |



STATE AGENCY APPROVAL

IDENTIFICATION STAMP
DIV. OF THE STATE ARCHITECT
APP. 04-124098 INC:
REVIEWED FOR
SS ☑ FLS ☑ ACS ☑
DATE: 11/14/24


SKC COMPANY
15345 FAIRFIELD RANCH ROAD, SUITE #160, CHINO, CA 91709
OFFICE: (909) 740-3120, FAX: (909) 726-9470
WEBSITE: WWW.SKCCOMPANY.COM
MANUFACTURER #MF1279666 GC LIC # 992118 DEALER # DL1279666 SBE CERTIFIED



ALL DESIGNS INDICATED ON THESE PLANS/DRAWINGS ARE PROPERTY OF SKC, INC AND ARE FOR THE USE BY SKC IN THE SPECIFIED JOB ONLY. THEY SHALL NOT BE USED AND/OR DUPLICATED OR TRANSMITTED IN ANY FORM, FOR ANY PURPOSE WITHOUT THE PRIOR WRITTEN CONSENT OF SKC, INC. ANY UNAUTHORIZED USE OF THESE PLANS SHALL SUBJECT THE OWNER OF SAID PROPERTY TO LIQUIDATED DAMAGES OF $75,000.00. THESE PLANS ARE PROTECTED UNDER THE PROVISIONS OF THE 1976 COPYRIGHT ACT COPYRIGHT SKC, © ALL RIGHTS RESERVED.


DISTRICT/CUSTOMER NAME: NEXTMOD

SCHOOL/SITE NAME: STOCKPILE

SHEET TITLE:
PC TITLE 24 REPORT
WORST CASE SCENARIO
(PERFORMANCE RUN)

PRE-CHECK (PC) DOCUMENT
CODE: 2022 CBC
A SEPARATE PROJECT APPLICATION FOR CONSTRUCTION IS REQUIRED

APPROVED
DIV. OF THE STATE ARCHITECT
APP: 04-122454 PC
REVIEWED FOR
SS ☑ FLS ☑ ACS ☑ CG ☑
DATE: 11/14/2023

PROFESSIONAL OF RECORD ON PC


ORION Structural Engineering, Inc.
11305 RANCHO BERNARDO RD SUITE 121
SAN DIEGO CA. 92127
PHONE (858) 679-1974

REGISTERED PROFESSIONAL ENGINEER RYAN J. OVER No. S 4437 EXP. 12/31/24 STRUCTURAL STATE OF CALIFORNIA

FIRM: Orion Structural Engineering, Inc.
ADDRESS: 11305 Rancho Bernardo Road Ste 121
CITY: San Diego, CA
PHONE: 858-679-1974


PROJECT SPECIFIC PROFESSIONAL OF RECORD

FIRM:
ADDRESS:
CITY:
PHONE:

REVISIONS

1 -
2 -
3 -
4 -
5 -

| | |
|---|---|
| PROJECT NO.: | 00-0000 |
| DRAFTER: | 00 |
| SCALE: | AS NOTED |
| DATE: | 00-00-00 |

SHEET NUMBER

# M3.2

10/31/2023 12:11:10 PM

## HVAC SYSTEM HEATING AND COOLING LOADS SUMMARY

| Project Name | Date |
|---|---|
| 24'x40' (PC #04-122454) Wall HVAC | 11/3/2023 |
| System Name: HP_3 | Floor Area: 960 |

| ENGINEERING CHECKS | |
|---|---|
| Number of Systems | 1 |
| **Heating System** | |
| Output per System | 39,000 |
| Total Output (Btuh) | 39,000 |
| Output (Btuh/sqft) | 40.6 |
| **Cooling System** | |
| Output per System | 42,000 |
| Total Output (Btuh) | 42,000 |
| Total Output (Tons) | 3.5 |
| Total Output (Btuh/sqft) | 43.8 |
| Total Output (sqft/Ton) | 274.3 |
| **Air System** | |
| CFM per System | 1,350 |
| Airflow (cfm) | 1,350 |
| Airflow (cfm/sqft) | 1.41 |
| Airflow (cfm/Ton) | 385.7 |
| Outside Air (%) | 76.2% |
| Outside Air (cfm/sqft) | 1.07 |
| Note: values above given at ARI conditions | |

| SYSTEM LOAD | COIL COOLING PEAK | | | COIL HTG. PEAK | |
|---|---|---|---|---|---|
| | CFM | Sensible | Latent | CFM | Sensible |
| Total Room Loads | 1,818 | 28,776 | 11,726 | 568 | 14,341 |
| Return Vented Lighting | | 0 | | | |
| Return Air Ducts | | 1,439 | | | 717 |
| Return Fan | | 0 | | | 0 |
| Ventilation | 1,029 | 8,965 | -10,745 | 1,029 | 51,591 |
| Supply Fan | | 1,535 | | | -1,535 |
| Supply Air Ducts | | 1,439 | | | 717 |
| TOTAL SYSTEM LOAD | | 42,154 | 980 | | 65,831 |
| **HVAC EQUIPMENT SELECTION** | | | | | |
| Bard W42HC | | 40,782 | 0 | | 16,282 |
| HP Supplemental Coil | | | | | 17,061 |
| Total Adjusted System Output (Adjusted for Peak Design conditions) | | 40,782 | 0 | | 33,343 |
| TIME OF SYSTEM PEAK | | Jul 3 PM | | | Jan 1 AM |

### HEATING SYSTEM PSYCHROMETRICS (Airstream Temperatures at Time of Heating Peak)

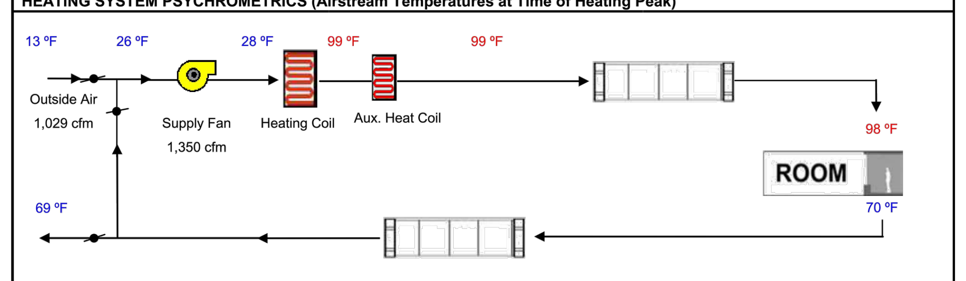


### COOLING SYSTEM PSYCHROMETRICS (Airstream Temperatures at Time of Cooling Peak)

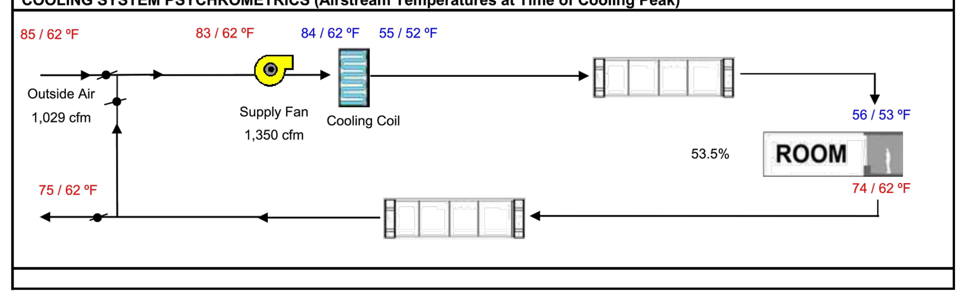


## ZONE LOAD SUMMARY

| Project Name | Date |
|---|---|
| *24'x40' (PC #04-122454) Wall HVAC* | *11/3/2023* |
| System Name: *HP_3* | Floor Area: *960* |

**ZONE LOAD SUMMARY**

| ZONE NAME | SYSTEM NAME | ZONAL SYSTEM Mult. | CFM | Sensible | Latent | Heating | OA CFM | COOLING PEAK Peak Hr | CFM | Sensible | Latent | HEATING PEAK CFM | Sensible |
|---|---|---|---|---|---|---|---|---|---|---|---|---|---|
| *All Zones* | | *1.0* | | | | | *1,029* | *Jul 3 PM* | *1,818* | *38,838* | *4,131* | *568* | *66,478* |
| | TOTALS | | | *0* | *0* | *0* | *1,029* | *Jul 3 PM* | | *38,838* | *4,131* | | *66,478* |
| | | | | | | | | | (BLOCK LOAD) | | | | |

## ROOM LOAD SUMMARY

| Project Name | Date |
|---|---|
| *24'x40' (PC #04-122454) Wall HVAC* | *11/3/2023* |
| System Name: *HP_3* | Floor Area: *960* |

**ROOM LOAD SUMMARY**

| Zone Name | Room Name | Mult. | ROOM COOLING PEAK CFM | Sensible | Latent | COIL COOLING PEAK CFM | Sensible | Latent | COIL HTG. PEAK CFM | Sensible |
|---|---|---|---|---|---|---|---|---|---|---|
| *All Zones* | *Classroom 100* | *1* | *1,822* | *28,844* | *11,726* | *1,818* | *28,776* | *11,726* | *568* | *14,341* |
| | | | | | PAGE TOTAL | *1,818* | *28,776* | *11,726* | *568* | *14,341* |
| | | | | | TOTAL * | *1,818* | *28,776* | *11,726* | *568* | *14,341* |

* Total includes ventilation load for zonal systems.

## ROOM HEATING PEAK LOADS

| Project Name | Date |
|---|---|
| *24'x40' (PC #04-122454) Wall HVAC* | *11/3/2023* |

| ROOM INFORMATION | | DESIGN CONDITIONS | |
|---|---|---|---|
| Room Name | *Classroom 100* | Time of Peak | *Jan 1 AM* |
| Floor Area | *960.00 ft²* | Outdoor Dry Bulb Temperature | *13 °F* |
| Indoor Dry Bulb Temperature | *70 °F* | | |

| Conduction | Area | | U-Value | | ΔT °F | | Btu/hr |
|---|---|---|---|---|---|---|---|
| *R-21 Wood Studs* | *1,318.0* | X | *0.0693* | X | *57* | = | *5,207* |
| *Double Metal Tinted* | *64.0* | X | *0.7900* | X | *57* | = | *2,882* |
| *Hollow Metal Door* | *42.0* | X | *0.7000* | X | *57* | = | *1,676* |
| *R-38 Single Ply Roof w/ 3" Insulation* | *944.0* | X | *0.0271* | X | *57* | = | *1,456* |
| *Double Non Metal Clear* | *16.0* | X | *0.1800* | X | *57* | = | *164* |
| *3.5" Conc Flr With R-19* | *960.0* | X | *0.0540* | X | *57* | = | *2,957* |
| | | | | | Page Total | | *14,341* |

Items shown with an asterisk (*) denote conduction through an interior surface to another room

Infiltration:[ *1.00* (Schedule Fraction) X *0.889* (Air Sensible) X *960* (Area) X *9.00* (Ceiling Height) X *0.000* (ACH) / 60 ] X *57* (ΔT) = *0*

**TOTAL HOURLY HEAT LOSS FOR ROOM** *14,341*

## ROOM COOLING PEAK LOADS

| Project Name | Date |
|---|---|
| *24'x40' (PC #04-122454) Wall HVAC* | *11/3/2023* |

| ROOM INFORMATION | | DESIGN CONDITIONS | |
|---|---|---|---|
| Room Name | *Classroom 100* | Time of Peak | *Jul 2 PM* |
| Floor Area | *960.00 ft²* | Outdoor Dry Bulb Temperature | *84 °F* |
| Indoor Dry Bulb Temperature | *74 °F* | Outdoor Wet Bulb Temperature | *62 °F* |

| Conduction | Area | | U-Value | | DETD[1] | | Btu/hr |
|---|---|---|---|---|---|---|---|
| *R-21 Wood Studs* | *220.0* | X | *0.0693* | X | *16.0* | = | *243* |
| *Double Metal Tinted* | *64.0* | X | *0.7900* | X | *6.1* | = | *307* |
| *R-21 Wood Studs* | *178.0* | X | *0.0693* | X | *13.1* | = | *161* |
| *Hollow Metal Door* | *42.0* | X | *0.7000* | X | *14.3* | = | *422* |
| *R-21 Wood Studs* | *460.0* | X | *0.0693* | X | *14.6* | = | *465* |
| *R-21 Wood Studs* | *460.0* | X | *0.0693* | X | *27.8* | = | *887* |
| *R-38 Single Ply Roof w/ 3" Insulation* | *944.0* | X | *0.0271* | X | *57.5* | = | *1,468* |
| *Double Non Metal Clear* | *16.0* | X | *0.1800* | X | *16.7* | = | *48* |
| *3.5" Conc Flr With R-19* | *960.0* | X | *0.0540* | X | *14.8* | = | *770* |
| | | | | | Page Total | | *4,771* |

1. Design Equivalent Temperature Difference (DETD)
Items shown with an asterisk (*) denote conduction through an interior surface to another room.

| Solar Gain | Orientation | Area | | SGF | | SC | | Weighting Factor | | Btu/hr |
|---|---|---|---|---|---|---|---|---|---|---|
| *Window* | *(S)* | *32.0* | X | *47* | X | *0.678* | X | *1.836* | = | *1,870* |
| *Window* | *(N)* | *32.0* | X | *47* | X | *0.678* | X | *0.765* | = | *780* |
| *Skylight* | *(S)* | *4.0* | X | *288* | X | *0.805* | X | *0.698* | = | *647* |
| *Skylight* | *(S)* | *4.0* | X | *288* | X | *0.805* | X | *0.698* | = | *647* |
| *Skylight* | *(S)* | *4.0* | X | *288* | X | *0.805* | X | *0.698* | = | *647* |
| *Skylight* | *(S)* | *4.0* | X | *288* | X | *0.805* | X | *0.698* | = | *647* |
| | | | | | | | | Page Total | | *5,238* |

| Internal Gain | Sched. Frac. | | Area | | Heat Gain | | | | | Weighting Factor | | Btu/hr |
|---|---|---|---|---|---|---|---|---|---|---|---|---|
| Lights | *1.00* | X | *960* | X | *0.600* | Watts/Sqft | X | *3.413* | Btu/Watt X | *1.000* | = | *1,966* |
| Occupants | *1.00* | X | *960* | X | *246* | Btu/occ. | / | *14.000* | Sqft/occ. X | *1.000* | = | *16,869* |
| Receptacle | *1.00* | X | *960* | X | *0.000* | Watts/Sqft | X | *3.413* | Btu/Watt X | *1.000* | = | *0* |
| Process | *1.00* | X | *960* | X | *0.000* | Watts/Sqft | X | *3.413* | Btu/Watt X | *1.000* | = | *0* |
| Process Lighting | *1.00* | X | *960* | X | *0.000* | Watts/Sqft | X | *3.413* | Btu/Watt X | *0.000* | = | *0* |

Infiltration:[ *1.00* (Schedule Fraction) X *0.889* (Air Sensible) X *960* (Area) X *9.00* (Ceiling Height) X *0.00* (ACH) / 60 ] X *10* (ΔT) = *0*

**TOTAL HOURLY SENSIBLE HEAT GAIN FOR ROOM** *28,844*

| Latent Gain | Sched. Frac. | | Area | | Heat Gain | | | | | | Btu/hr |
|---|---|---|---|---|---|---|---|---|---|---|---|
| Occupants | *1.00* | X | *960* | X | *171* | Btuh/occ. | / | *14.000* | Sqft/occ. | = | *11,726* |
| Receptacle | *1.00* | X | *960* | X | *0.000* | Watts/Sqft | X | *3.413* | Btu/Watt | = | *0* |
| Process | *1.00* | X | *960* | X | *0.000* | Watts/Sqft | X | *3.413* | Btu/Watt | = | *0* |

Infiltration:[ *1.00* (Schedule Fraction) X *3,987* (Air Latent) X *960* (Area) X *9.00* (Ceiling Height) X *0.00* (ACH) /60] X *0.00000* (ΔW) = *0*

**TOTAL HOURLY LATENT HEAT GAIN FOR ROOM** *11,726*

---

STATE AGENCY APPROVAL

IDENTIFICATION STAMP
DIV. OF THE STATE ARCHITECT
APP. 04-124098 INC:
REVIEWED FOR
SS ☑ FLS ☑ ACS ☑
DATE: 11/14/24

SKC COMPANY
15345 FAIRFIELD RANCH ROAD, SUITE #160, CHINO, CA 91709
OFFICE: (909) 740-3120, FAX: (909) 726-9470
WEBSITE: WWW.SKCCOMPANY.COM
MANUFACTURER #MF1279666 DEALER # DL1279666
GC LIC # 992118 SBE CERTIFIED

ALL DESIGNS INDICATED ON THESE PLANS/DRAWINGS ARE PROPERTY OF SKC, INC AND ARE FOR THE USE BY SKC IN THE SPECIFIED JOB ONLY. THEY SHALL NOT BE USED AND/OR DUPLICATED OR TRANSMITTED IN ANY FORM, FOR ANY PURPOSE WITHOUT THE PRIOR WRITTEN CONSENT OF SKC, INC. ANY UNAUTHORIZED USE OF THESE PLANS SHALL SUBJECT THE OWNER OF SAID PROPERTY TO LIQUIDATED DAMAGES OF $75,000.00. THESE PLANS ARE PROTECTED UNDER THE PROVISIONS OF THE 1976 COPYRIGHT ACT COPYRIGHT SKC, © ALL RIGHTS RESERVED.

DISTRICT/CUSTOMER NAME: NEXTMOD

SCHOOL/SITE NAME: STOCKPILE

SHEET TITLE:
PC TITLE 24 REPORT
WORST CASE SCENARIO
(PERFORMANCE RUN)

PRE-CHECK (PC) DOCUMENT
CODE: 2022 CBC
A SEPARATE PROJECT APPLICATION FOR CONSTRUCTION IS REQUIRED

APPROVED
DIV. OF THE STATE ARCHITECT
APP: 04-122454 PC
REVIEWED FOR
SS ☑ FLS ☑ ACS ☑ CG ☑
DATE: 11/14/2023

PROFESSIONAL OF RECORD ON PC

ORION
Structural Engineering, Inc.
11305 RANCHO BERNARDO RD
SUITE 121
SAN DIEGO CA. 92127
PHONE (858) 679-1974

REGISTERED PROFESSIONAL ENGINEER
RYAN J. OVER
No. S 4437
EXP. 12/31/24
STRUCTURAL
STATE OF CALIFORNIA

FIRM: Orion Structural Engineering, Inc.
ADDRESS: 11305 Rancho Bernardo Road Ste 121
CITY: San Diego, CA
PHONE: 858-679-1974

PROJECT SPECIFIC PROFESSIONAL OF RECORD

FIRM:
ADDRESS:
CITY:
PHONE:

REVISIONS

| | |
|---|---|
| 1 | - |
| 2 | - |
| 3 | - |
| 4 | - |
| 5 | - |

| | |
|---|---|
| PROJECT NO.: | 00-0000 |
| DRAFTER: | 00 |
| SCALE: | AS NOTED |
| DATE: | 00-00-00 |

SHEET NUMBER

**M3.3**

10/31/2023 12:11:41 PM

## LEGEND

★ = LEAST EFFICIENT CONDITION

### Performance Runs By Zone & Orientation

| | |
|---|---|
| Project Name: | SKC 24'X40' (Roof Mt) |
| Date of Title 24 Report: | See Reports |
| DSA File No.: | PC-116 |
| DSA Application #: | 04-122454 |
| Building Name/Model #: | PC: 24'-120'x40' |
| Comments: | Please input data from the energy pro runs in STD Budget & Prop.Design for each climate zone<br>WORSE CASE OPTIONS ON THE PC: WOOD STUDS / CONC FLOOR / PLYWOOD RF / ROOF MT HP |

NOTE: Enter data in colored cells only.

Building Size

| Climate Zone: 14 (Ref City) Palmdale | | | |
|---|---|---|---|
| Front Orientation | Std Budget Kbtu/sf-yr | Prop.Design Kbtu/sf-yr | Compliance Margin |
| 30 | 406.27 | 322.76 | 20.56% |
| 75 | 400.59 | 323.91 | 19.14% |
| 120 | 399.21 | 322.22 | 19.29% |
| 165 | 393.39 | 317.71 | 19.24% |
| 210 | 397.80 | 320.22 | 19.50% |
| 255 | 401.52 | 323.25 | 19.49% |
| 300 | 406.83 | 323.80 | 20.41% |
| 345 | 404.24 | 320.18 | 20.79% |

(1) 3T+4.4kw, R-19 Wall, R-30+18 Roof & R-40 Conc Flr,
(1) 6x7 Ext Door, (2) 8x4 Win (4) Skylights & 12 lights

| Climate Zone: 15 (Ref City) Palm Springs | | | |
|---|---|---|---|
| Front Orientation | Std Budget Kbtu/sf-yr | Prop.Design Kbtu/sf-yr | Compliance Margin |
| 30 | 417.46 | 321.23 | 23.05% |
| 75 | 410.83 | 322.23 | 21.57% |
| 120 | 409.65 | 321.51 | 21.52% |
| 165 | 404.63 | 318.23 | 21.35% |
| 210 | 409.65 | 320.47 | 21.77% |
| 255 | 411.53 | 323.28 | 21.44% |
| 300 | 419.53 | 323.74 | 22.83% |
| 345 | 416.66 | 320.20 | 23.15% |

(1) 3T+4.4kw, R-19 Wall, R-30+18 Roof & R-40 Conc Flr,
(1) 6x7 Ext Door, (2) 8x4 Win (4) Skylights & 12 lights

Building Size

| Climate Zone: 16 (Ref City) Blue Canyon | | | |
|---|---|---|---|
| Front Orientation | Std Budget Kbtu/sf-yr | Prop.Design Kbtu/sf-yr | Compliance Margin |
| 30 | 343.92 | 294.31 | 14.42% |
| 75 | 338.75 | 293.98 | 13.22% |
| 120 | 339.04 | 293.44 | 13.45% |
| 165 | 333.69 | 291.96 | 12.51% |
| 210 | 337.60 | 292.86 | 13.25% |
| 255 | 341.28 | 293.14 | 14.11% |
| 300 | 343.89 | 293.66 | 14.61% |
| 345 | 342.19 | 293.26 | 14.30% |

(1) 3T+4.4kw, R-19 Wall, R-30+18 Roof & R-40 Conc Flr,
(1) 6x7 Ext Door, (2) 8x4 Win (4) Skylights & 12 lights

### Performance Runs By Zone & Orientation

| | |
|---|---|
| Project Name: | SKC 36'X40' (Roof Mt) |
| Date of Title 24 Report: | See Reports |
| DSA File No.: | PC-116 |
| DSA Application #: | 04-122454 |
| Building Name/Model #: | PC: 24'-120'x40' |
| Comments: | Please input data from the energy pro runs in STD Budget & Prop.Design for each climate zone worksheet<br>WORSE CASE OPTIONS ON THE PC: WOOD STUDS / CONC FLOOR / PLYWOOD RF / ROOF MT HP |

NOTE: Enter data in colored cells only.

Building Size

| Climate Zone: 14 (Ref City) Palmdale | | | |
|---|---|---|---|
| Front Orientation | Std Budget Kbtu/sf-yr | Prop.Design Kbtu/sf-yr | Compliance Margin |
| 30 | 365.31 | 314.89 | 13.80% |
| 75 | 369.75 | 317.68 | 14.08% |
| 120 | 367.55 | 316.54 | 13.88% |
| 165 | 395.90 | 312.17 | 21.15% |
| 210 | 365.78 | 314.89 | 13.91% |
| 255 | 370.31 | 317.71 | 14.20% |
| 300 | 368.10 | 316.64 | 13.98% |
| 345 | 395.54 | 312.25 | 21.06% |

(2) 3T+4.4kw, R-19 Wall, R-30+18 Roof & R-40 Conc Flr
(2) 6x7 Ext Door, (2) 8x4 Win, (6) Skylights & (18) lights

| Climate Zone: 15 (Ref City) Palm Springs | | | |
|---|---|---|---|
| Front Orientation | Std Budget Kbtu/sf-yr | Prop.Design Kbtu/sf-yr | Compliance Margin |
| 30 | 380.06 | 322.19 | 15.23% |
| 75 | 384.86 | 325.43 | 15.44% |
| 120 | 382.86 | 324.62 | 15.21% |
| 165 | 373.15 | 320.26 | 14.17% |
| 210 | 380.61 | 322.33 | 15.31% |
| 255 | 385.64 | 325.59 | 15.57% |
| 300 | 383.33 | 324.64 | 15.31% |
| 345 | 372.87 | 320.19 | 14.13% |

(2) 3T+4.4kw, R-19 Wall, R-30+18 Roof & R-40 Conc Flr
(2) 6x7 Ext Door, (2) 8x4 Win, (6) Skylights & (18) lights

Building Size

| Climate Zone: 16 (Ref City) Blue Canyon | | | |
|---|---|---|---|
| Front Orientation | Std Budget Kbtu/sf-yr | Prop.Design Kbtu/sf-yr | Compliance Margin |
| 30 | 355.57 | 286.05 | 19.55% |
| 75 | 358.35 | 286.38 | 20.08% |
| 120 | 354.80 | 286.17 | 19.34% |
| 165 | 351.36 | 285.03 | 18.88% |
| 210 | 355.96 | 285.82 | 19.70% |
| 255 | 358.88 | 286.24 | 20.24% |
| 300 | 355.30 | 286.28 | 19.43% |
| 345 | 350.96 | 285.29 | 18.71% |

(2) 3T+4.4kw, R-19 Wall, R-30+18 Roof & R-40 Conc Flr
(2) 6x7 Ext Door, (2) 8x4 Win, (6) Skylights & (18) lights

### Performance Runs By Zone & Orientation

| | |
|---|---|
| Project Name: | SKC 120'X40' (Roof Mt) |
| Date of Title 24 Report: | See Reports |
| DSA File No.: | PC-116 |
| DSA Application #: | 04-122454 |
| Building Name/Model #: | PC: 24'-120'x40' |
| Comments: | Please input data from the energy pro runs in STD Budget & Prop.Design for each climate zone worksheet<br>WORSE CASE OPTIONS ON THE PC: WOOD STUDS / CONC FLOOR / PLYWOOD RF / ROOF MT HP |

NOTE: Enter data in colored cells only.

Building Size

| Climate Zone: 14 (Ref City) Palmdale | | | |
|---|---|---|---|
| Front Orientation | Std Budget Kbtu/sf-yr | Prop.Design Kbtu/sf-yr | Compliance Margin |
| 30 | 368.01 | 290.25 | 21.13% |
| 75 | 373.24 | 294.03 | 21.22% |
| 120 | 371.47 | 292.42 | 21.28% |
| 165 | 357.01 | 286.49 | 19.75% |
| 210 | 360.64 | 288.56 | 19.99% |
| 255 | 363.08 | 291.38 | 19.75% |
| 300 | 362.45 | 290.30 | 19.91% |
| 345 | 358.27 | 286.12 | 20.14% |

(1) 3T+4.4kw, R-19 Wall, R-30+18 Roof & R-13 Conc Floor
(1) 6x7 Ext Door, (2) 8x4 Win, (4) Skylights & (12) lights

| Climate Zone: 15 (Ref City) Palm Springs | | | |
|---|---|---|---|
| Front Orientation | Std Budget Kbtu/sf-yr | Prop.Design Kbtu/sf-yr | Compliance Margin |
| 30 | 387.51 | 297.80 | 23.15% |
| 75 | 393.35 | 300.93 | 23.50% |
| 120 | 391.21 | 299.51 | 23.44% |
| 165 | 375.35 | 293.86 | 21.71% |
| 210 | 378.87 | 295.71 | 21.95% |
| 255 | 382.49 | 298.97 | 21.84% |
| 300 | 382.77 | 298.86 | 21.92% |
| 345 | 376.26 | 294.78 | 21.66% |

(1) 3T+4.4kw, R-19 Wall, R-30+18 Roof & R-13 Conc Floor
(1) 6x7 Ext Door, (2) 8x4 Win, (4) Skylights & (12) lights

Building Size

| Climate Zone: 16 (Ref City) Blue Canyon | | | |
|---|---|---|---|
| Front Orientation | Std Budget Kbtu/sf-yr | Prop.Design Kbtu/sf-yr | Compliance Margin |
| 30 | 322.29 | 276.56 | 14.19% |
| 75 | 325.41 | 277.05 | 14.86% |
| 120 | 322.72 | 276.83 | 14.22% |
| 165 | 311.95 | 275.34 | 11.74% |
| 210 | 315.99 | 276.12 | 12.62% |
| 255 | 319.68 | 276.11 | 13.63% |
| 300 | 315.19 | 275.90 | 12.47% |
| 345 | 316.45 | 274.98 | 13.10% |

(1) 3T+4.4kw, R-19 Wall, R-30+18 Roof & R-13 Conc Floor
(1) 6x7 Ext Door, (2) 8x4 Win, (4) Skylights & (12) lights

### Performance Runs By Zone & Orientation

| | |
|---|---|
| Project Name: | SKC 24'X40' (Wall Mt) |
| Date of Title 24 Report: | See Reports |
| DSA File No.: | PC-116 |
| DSA Application #: | 04-122454 |
| Building Name/Model #: | PC: 24'-120'x40' |
| Comments: | Please input data from the energy pro runs in STD Budget & Prop Design for each climate zone<br>WORSE CASE OPTIONS ON THE PC: WOOD STUDS / CONC FLOOR / PLYWOOD RF / WALL MT HP |

NOTE: Enter data in colored cells only.

Building Size

| Climate Zone: 14 (Ref City) Palmdale | | | |
|---|---|---|---|
| Front Orientation | Std Budget Kbtu/sf-yr | Prop.Design Kbtu/sf-yr | Compliance Margin |
| 30 | 407.12 | 373.82 | 8.18% |
| 75 | 412.68 | 377.70 | 8.48% |
| 120 | 410.79 | 376.00 | 8.47% |
| 165 | 395.48 | 369.27 | 6.63% |
| 210 | 399.41 | 372.01 | 6.86% |
| 255 | 401.87 | 374.95 | 6.70% |
| 300 | 401.29 | 373.94 | 6.82% |
| 345 | 397.00 | 369.04 | 7.04% |

(1) 3.5T+5kw, R-19 Wall, R-30+18 Roof & R-40 Conc Flr,
(1) 6x7 Ext Door, (2) 8x4 Win, (4) Skylights & (12) lights

| Climate Zone: 15 (Ref City) Palm Springs | | | |
|---|---|---|---|
| Front Orientation | Std Budget Kbtu/sf-yr | Prop.Design Kbtu/sf-yr | Compliance Margin |
| 30 | 419.23 | 384.48 | 8.29% |
| 75 | 425.21 | 388.09 | 8.73% |
| 120 | 422.94 | 386.32 | 8.66% |
| 165 | 406.58 | 379.74 | 6.60% |
| 210 | 410.19 | 381.93 | 6.89% |
| 255 | 413.85 | 385.73 | 6.79% |
| 300 | 414.24 | 385.72 | 6.88% |
| 345 | 407.51 | 380.87 | 6.54% |

(1) 3.5T+5kw, R-19 Wall, R-30+18 Roof & R-40 Conc Flr,
(1) 6x7 Ext Door, (2) 8x4 Win, (4) Skylights & (12) lights

Building Size

| Climate Zone: 16 (Ref City) Blue Canyon | | | |
|---|---|---|---|
| Front Orientation | Std Budget Kbtu/sf-yr | Prop.Design Kbtu/sf-yr | Compliance Margin |
| 30 | 346.14 | 335.60 | 3.05% |
| 75 | 349.42 | 336.22 | 3.78% |
| 120 | 346.47 | 336.11 | 2.99% |
| * 165 | 334.81 | 334.37 | 0.13% * |
| 210 | 339.36 | 335.19 | 1.23% |
| 255 | 343.44 | 335.43 | 2.33% |
| 300 | 338.71 | 335.34 | 0.99% |
| 345 | 339.85 | 333.99 | 1.72% |

(1) 3.5T+5kw, R-19 Wall, R-30+18 Roof & R-40 Conc Flr,
(1) 6x7 Ext Door, (2) 8x4 Win, (4) Skylights & (12) lights

### Performance Runs By Zone & Orientation

| | |
|---|---|
| Project Name: | SKC 36'X40' (Wall Mt) |
| Date of Title 24 Report: | See Reports |
| DSA File No.: | PC-116 |
| DSA Application #: | 04-122454 |
| Building Name/Model #: | PC: 24'-120'x40' |
| Comments: | Please input data from the energy pro runs in STD Budget & Prop Design for each climate zone<br>WORSE CASE OPTIONS ON THE PC: WOOD STUDS / CONC FLOOR / PLYWOOD RF / WALL MT HP |

NOTE: Enter data in colored cells only.

Building Size

| Climate Zone: 14 (Ref City) Palmdale | | | |
|---|---|---|---|
| Front Orientation | Std Budget Kbtu/sf-yr | Prop.Design Kbtu/sf-yr | Compliance Margin |
| 30 | 366.36 | 327.72 | 10.55% |
| 75 | 369.49 | 330.19 | 10.64% |
| 120 | 402.56 | 329.16 | 18.23% |
| 165 | 397.56 | 324.61 | 18.35% |
| 210 | 368.01 | 327.73 | 10.95% |
| 255 | 373.78 | 331.02 | 11.44% |
| 300 | 373.08 | 330.55 | 11.40% |
| 345 | 398.28 | 325.66 | 18.23% |

(2) 2.5T+5kw, R-19 Wall, R-30+18 Roof & R-40 Conc Flr
(2) 6x7 Ext Door, (2) 8x4 Win, (6) Skylights & (18) lights

| Climate Zone: 15 (Ref City) Palm Springs | | | |
|---|---|---|---|
| Front Orientation | Std Budget Kbtu/sf-yr | Prop.Design Kbtu/sf-yr | Compliance Margin |
| 30 | 380.53 | 341.11 | 10.36% |
| 75 | 383.21 | 342.97 | 10.50% |
| 120 | 379.70 | 342.29 | 9.85% |
| 165 | 375.07 | 338.20 | 9.83% |
| 210 | 381.74 | 341.67 | 10.50% |
| 255 | 390.37 | 346.76 | 11.17% |
| 300 | 390.78 | 349.96 | 10.45% |
| 345 | 377.19 | 340.96 | 9.61% |

(2) 2.5T+5kw, R-19 Wall, R-30+18 Roof & R-40 Conc Flr
(2) 6x7 Ext Door, (2) 8x4 Win, (6) Skylights & (18) lights

Building Size

| Climate Zone: 16 (Ref City) Blue Canyon | | | |
|---|---|---|---|
| Front Orientation | Std Budget Kbtu/sf-yr | Prop.Design Kbtu/sf-yr | Compliance Margin |
| 30 | 355.83 | 295.31 | 17.01% |
| 75 | 357.91 | 296.89 | 17.05% |
| 120 | 354.54 | 297.50 | 16.09% |
| 165 | 355.98 | 295.31 | 17.04% |
| 210 | 360.09 | 294.45 | 18.23% |
| 255 | 362.04 | 293.69 | 18.88% |
| 300 | 360.48 | 293.83 | 18.49% |
| 345 | 351.17 | 293.02 | 16.56% |

(2) 2.5T+5kw, R-19 Wall, R-30+18 Roof & R-40 Conc Flr
(2) 6x7 Ext Door, (2) 8x4 Win, (6) Skylights & (18) lights

### Performance Runs By Zone & Orientation

| | |
|---|---|
| Project Name: | SKC 120'X40' (Wall Mt) |
| Date of Title 24 Report: | See Reports |
| DSA File No.: | PC-116 |
| DSA Application #: | 04-122454 |
| Building Name/Model #: | PC: 24'-120'x40' |
| Comments: | Please input data from the energy pro runs in STD Budget & Prop Design for each climate zone<br>WORSE CASE OPTIONS ON THE PC: WOOD STUDS / CONC FLOOR / PLYWOOD RF / WALL MT |

NOTE: Enter data in colored cells only.

Building Size

| Climate Zone: 14 (Ref City) Palmdale | | | |
|---|---|---|---|
| Front Orientation | Std Budget Kbtu/sf-yr | Prop.Design Kbtu/sf-yr | Compliance Margin |
| 30 | 373.22 | 340.74 | 8.70% |
| 75 | 378.60 | 344.66 | 8.96% |
| 120 | 376.82 | 342.86 | 9.01% |
| 165 | 361.97 | 336.60 | 7.01% |
| 210 | 365.73 | 339.00 | 7.31% |
| 255 | 368.36 | 341.97 | 7.16% |
| 300 | 367.53 | 340.79 | 7.28% |
| 345 | 363.33 | 336.38 | 7.42% |

(1) 3.5T+5kw, R-21 Wall, R-30+18 Roof & R-40 Conc Flr,
(1) 6x7 Ext Door, (2) 8x4 Win, (4) Skylights & (12) lights

| Climate Zone: 15 (Ref City) Palm Springs | | | |
|---|---|---|---|
| Front Orientation | Std Budget Kbtu/sf-yr | Prop.Design Kbtu/sf-yr | Compliance Margin |
| 30 | 393.33 | 359.29 | 8.65% |
| 75 | 399.11 | 362.93 | 9.07% |
| 120 | 396.93 | 361.31 | 8.97% |
| 165 | 380.94 | 354.77 | 6.87% |
| 210 | 384.55 | 356.90 | 7.19% |
| 255 | 388.24 | 360.67 | 7.10% |
| 300 | 388.57 | 360.64 | 7.19% |
| 345 | 381.89 | 355.97 | 6.79% |

(1) 3.5T+5kw, R-21 Wall, R-30+18 Roof & R-40 Conc Flr,
(1) 6x7 Ext Door, (2) 8x4 Win, (4) Skylights & (12) lights

Building Size

| Climate Zone: 16 (Ref City) Blue Canyon | | | |
|---|---|---|---|
| Front Orientation | Std Budget Kbtu/sf-yr | Prop.Design Kbtu/sf-yr | Compliance Margin |
| 30 | 326.84 | 316.82 | 3.07% |
| 75 | 330.06 | 317.51 | 3.80% |
| 120 | 327.27 | 317.27 | 3.06% |
| 165 | 316.12 | 315.63 | 0.16% |
| 210 | 320.29 | 316.46 | 1.20% |
| 255 | 324.07 | 316.62 | 2.30% |
| 300 | 319.56 | 316.54 | 0.95% |
| 345 | 320.69 | 315.23 | 1.70% |

(1) 3.5T+5kw, R-21 Wall, R-30+18 Roof & R-40 Conc Flr,
(1) 6x7 Ext Door, (2) 8x4 Win, (4) Skylights & (12) lights

STATE AGENCY APPROVAL

IDENTIFICATION STAMP
DIV. OF THE STATE ARCHITECT
APP. 04-124098 INC:
REVIEWED FOR
SS ☑ FLS ☑ ACS ☑
DATE: 11/14/24


SKC COMPANY
15345 FAIRFIELD RANCH ROAD, SUITE #160, CHINO, CA 91709
OFFICE: (909) 740-3120, FAX: (909) 726-9470
WEBSITE: WWW.SKCCOMPANY.COM
MANUFACTURER #MF1279666 DEALER # DL1275666
GC LIC # 962118 SBE CERTIFIED



ALL DESIGNS INDICATED ON THESE PLANS/DRAWINGS ARE PROPERTY OF SKC, INC AND ARE FOR THE USE BY SKC IN THE SPECIFIED JOB ONLY. THEY SHALL NOT BE USED AND/OR DUPLICATED OR TRANSMITTED IN ANY FORM, FOR ANY PURPOSE WITHOUT THE PRIOR WRITTEN CONSENT OF SKC, INC. ANY UNAUTHORIZED USE OF THESE PLANS SHALL SUBJECT THE OWNER OF SAID PROPERTY TO LIQUIDATED DAMAGES OF $75,000.00. THESE PLANS ARE PROTECTED UNDER THE PROVISIONS OF THE 1976 COPYRIGHT ACT COPYRIGHT SKC, ©. ALL RIGHTS RESERVED.


DISTRICT/CUSTOMER NAME:
NEXTMOD

SCHOOL/SITE NAME:
STOCKPILE

SHEET TITLE:
PC TITLE 24 REPORT
PERFORMANCE RUN
TABLES

PRE-CHECK (PC) DOCUMENT
CODE: 2022 CBC
A SEPARATE PROJECT APPLICATION FOR
CONSTRUCTION IS REQUIRED

APPROVED
DIV. OF THE STATE ARCHITECT
APP: 04-122454 PC
REVIEWED FOR
SS ☑ FLS ☑ ACS ☑ CG ☑
DATE: 11/14/2023

PROFESSIONAL OF RECORD ON PC


ORION
Structural Engineering, Inc.
11305 RANCHO BERNARDO RD
SUITE 121
SAN DIEGO CA, 92127
PHONE (858)-679-1974
RYAN J. OWEN
EXP. 12/31/24
STRUCTURAL
STATE OF CALIFORNIA

FIRM: Orion Structural Engineering, Inc.
ADDRESS: 11305 Rancho Bernardo Road Ste 121
CITY: San Diego, CA
PHONE: 858-679-1974


PROJECT SPECIFIC PROFESSIONAL OF RECORD

FIRM:
ADDRESS:
CITY:
PHONE:

REVISIONS

1 -
2 -
3 -
4 -
5 -

| | |
|---|---|
| PROJECT NO.: | 00-0000 |
| DRAFTER: | 00 |
| SCALE: | AS NOTED |
| DATE: | 00-00-00 |

SHEET NUMBER

M3.4

10/31/2023 12:55:37 PM

## WORST CASE CONDITIONS - WALL MOUNT HEAT PUMPS

| BUILDING SIZE | BUILDING SF | CLIMATE ZONES | * WORSE CASE EQUIPMENT SIZE (TONS) | HEAT PUMP QUANTITY | WORSE CASE HEAT STRIP | WORSE CASE EXT FINISH TYPE | WORSE CASE WALL TYPE | WORSE CASE WALL INSULATION VALUE | WORSE CASE WALL INSULATION TYPE | WORSE CASE ROOF TYPE & FINISH | WORSE CASE ROOF INSULATION VALUE | WORSE CASE ROOF INSULATION TYPE | WORSE CASE SUB-FLOOR TYPE | WORSE CASE SUB-FLOOR INSULATION VALUE | WORSE CASE FLOOR INSULATION TYPE | MAX INTERIOR CEILING LIGHTS (2X4) ON PC | MAX SKYLIGHT QTY ON PC | MAX EXT METAL DOOR SF MODELED FOR STANDARD CLASSROOM | MAX WINDOW SF MODELED FOR STANDARD CLASSROOM |
|---|---|---|---|---|---|---|---|---|---|---|---|---|---|---|---|---|---|---|---|
| 24' X 40' | 960 | 14 | 3.5T | 1 | 5 KW | STUCCO | WOOD | R-21 | FG | SINGLE PLY OVER PLYWOOD | R-38 + R-18 (3" RIDIGD INSUL) | FG + FOAM | LT WT CONC | R-19 | FG | 12 | 4 | 42 | 64 |
| | | 15 | 3.5T | 1 | 5 KW | STUCCO | WOOD | R-21 | FG | SINGLE PLY OVER PLYWOOD | R-38 + R-18 (3" RIDIGD INSUL) | FG + FOAM | LT WT CONC | R-19 | FG | 12 | 4 | 42 | 64 |
| | | 16 | 3.5T | 1 | 5 KW | STUCCO | WOOD | R-21 | FG | SINGLE PLY OVER PLYWOOD | R-38 + R-18 (3" RIDIGD INSUL) | FG + FOAM | LT WT CONC | R-19 | FG | 12 | 4 | 42 | 64 |
| ~~36' X 40'~~ | ~~1,440~~ | ~~14~~ | ~~2.5T~~ | ~~2~~ | ~~5 KW~~ | ~~STUCCO~~ | ~~WOOD~~ | ~~R-21~~ | ~~FG~~ | ~~SINGLE PLY OVER PLYWOOD~~ | ~~R-38 + R-18 (3" RIDIGD INSUL)~~ | ~~FG + FOAM~~ | ~~LT WT CONC~~ | ~~R-19~~ | ~~FG~~ | ~~18~~ | ~~6~~ | ~~84~~ | ~~64~~ |
| | | ~~15~~ | ~~2.5T~~ | ~~2~~ | ~~5 KW~~ | ~~STUCCO~~ | ~~WOOD~~ | ~~R-21~~ | ~~FG~~ | ~~SINGLE PLY OVER PLYWOOD~~ | ~~R-38 + R-18 (3" RIDIGD INSUL)~~ | ~~FG + FOAM~~ | ~~LT WT CONC~~ | ~~R-19~~ | ~~FG~~ | ~~18~~ | ~~6~~ | ~~84~~ | ~~64~~ |
| | | ~~16~~ | ~~2.5T~~ | ~~2~~ | ~~5 KW~~ | ~~STUCCO~~ | ~~WOOD~~ | ~~R-21~~ | ~~FG~~ | ~~SINGLE PLY OVER PLYWOOD~~ | ~~R-38 + R-18 (3" RIDIGD INSUL)~~ | ~~FG + FOAM~~ | ~~LT WT CONC~~ | ~~R-19~~ | ~~FG~~ | ~~18~~ | ~~6~~ | ~~84~~ | ~~64~~ |
| ~~48' X 40'~~ ~~(TWO 24' X 40' INCR)~~ | ~~1,920~~ | ~~14~~ | ~~3.5T~~ | ~~1~~ | ~~5 KW~~ | ~~STUCCO~~ | ~~WOOD~~ | ~~R-21~~ | ~~FG~~ | ~~SINGLE PLY OVER PLYWOOD~~ | ~~R-38 + R-18 (3" RIDIGD INSUL)~~ | ~~FG + FOAM~~ | ~~LT WT CONC~~ | ~~R-19~~ | ~~FG~~ | ~~24~~ | ~~8~~ | ~~84~~ | ~~128~~ |
| | | ~~15~~ | ~~3.5T~~ | ~~1~~ | ~~5 KW~~ | ~~STUCCO~~ | ~~WOOD~~ | ~~R-21~~ | ~~FG~~ | ~~SINGLE PLY OVER PLYWOOD~~ | ~~R-38 + R-18 (3" RIDIGD INSUL)~~ | ~~FG + FOAM~~ | ~~LT WT CONC~~ | ~~R-19~~ | ~~FG~~ | ~~24~~ | ~~8~~ | ~~84~~ | ~~128~~ |
| | | ~~16~~ | ~~3.5T~~ | ~~1~~ | ~~5 KW~~ | ~~STUCCO~~ | ~~WOOD~~ | ~~R-21~~ | ~~FG~~ | ~~SINGLE PLY OVER PLYWOOD~~ | ~~R-38 + R-18 (3" RIDIGD INSUL)~~ | ~~FG + FOAM~~ | ~~LT WT CONC~~ | ~~R-19~~ | ~~FG~~ | ~~24~~ | ~~8~~ | ~~84~~ | ~~128~~ |
| ** ~~60' X 40'~~ ~~(24' X 40' + 36' X 40')~~ | ~~2,400~~ | ~~14~~ | ~~3.5T / 2.5T~~ | ~~1 / 2~~ | ~~5 KW~~ | ~~STUCCO~~ | ~~WOOD~~ | ~~R-21~~ | ~~FG~~ | ~~SINGLE PLY OVER PLYWOOD~~ | ~~R-38 + R-18 (3" RIDIGD INSUL)~~ | ~~FG + FOAM~~ | ~~LT WT CONC~~ | ~~R-19~~ | ~~FG~~ | ~~30~~ | ~~10~~ | ~~126~~ | ~~128~~ |
| | | ~~15~~ | ~~3.5T / 2.5T~~ | ~~1 / 2~~ | ~~5 KW~~ | ~~STUCCO~~ | ~~WOOD~~ | ~~R-21~~ | ~~FG~~ | ~~SINGLE PLY OVER PLYWOOD~~ | ~~R-38 + R-18 (3" RIDIGD INSUL)~~ | ~~FG + FOAM~~ | ~~LT WT CONC~~ | ~~R-19~~ | ~~FG~~ | ~~30~~ | ~~10~~ | ~~126~~ | ~~128~~ |
| | | ~~16~~ | ~~3.5T / 2.5T~~ | ~~1 / 2~~ | ~~5 KW~~ | ~~STUCCO~~ | ~~WOOD~~ | ~~R-21~~ | ~~FG~~ | ~~SINGLE PLY OVER PLYWOOD~~ | ~~R-38 + R-18 (3" RIDIGD INSUL)~~ | ~~FG + FOAM~~ | ~~LT WT CONC~~ | ~~R-19~~ | ~~FG~~ | ~~30~~ | ~~10~~ | ~~126~~ | ~~128~~ |
| ** ~~72' X 40'~~ ~~(THREE 24' X 40')~~ | ~~2,880~~ | ~~14~~ | ~~3.5T~~ | ~~3~~ | ~~5 KW~~ | ~~STUCCO~~ | ~~WOOD~~ | ~~R-21~~ | ~~FG~~ | ~~SINGLE PLY OVER PLYWOOD~~ | ~~R-38 + R-18 (3" RIDIGD INSUL)~~ | ~~FG + FOAM~~ | ~~LT WT CONC~~ | ~~R-19~~ | ~~FG~~ | ~~36~~ | ~~12~~ | ~~126~~ | ~~192~~ |
| | | ~~15~~ | ~~3.5T~~ | ~~3~~ | ~~5 KW~~ | ~~STUCCO~~ | ~~WOOD~~ | ~~R-21~~ | ~~FG~~ | ~~SINGLE PLY OVER PLYWOOD~~ | ~~R-38 + R-18 (3" RIDIGD INSUL)~~ | ~~FG + FOAM~~ | ~~LT WT CONC~~ | ~~R-19~~ | ~~FG~~ | ~~36~~ | ~~12~~ | ~~126~~ | ~~192~~ |
| | | ~~16~~ | ~~3.5T~~ | ~~3~~ | ~~5 KW~~ | ~~STUCCO~~ | ~~WOOD~~ | ~~R-21~~ | ~~FG~~ | ~~SINGLE PLY OVER PLYWOOD~~ | ~~R-38 + R-18 (3" RIDIGD INSUL)~~ | ~~FG + FOAM~~ | ~~LT WT CONC~~ | ~~R-19~~ | ~~FG~~ | ~~36~~ | ~~12~~ | ~~126~~ | ~~192~~ |
| ** ~~84' X 40'~~ ~~(TWO 24' X 40' + ONE 36' X 40')~~ | ~~3,360~~ | ~~14~~ | ~~3.5T / 2.5T~~ | ~~2 / 2~~ | ~~5 KW~~ | ~~STUCCO~~ | ~~WOOD~~ | ~~R-21~~ | ~~FG~~ | ~~SINGLE PLY OVER PLYWOOD~~ | ~~R-38 + R-18 (3" RIDIGD INSUL)~~ | ~~FG + FOAM~~ | ~~LT WT CONC~~ | ~~R-19~~ | ~~FG~~ | ~~42~~ | ~~14~~ | ~~168~~ | ~~192~~ |
| | | ~~15~~ | ~~3.5T / 2.5T~~ | ~~2 / 2~~ | ~~5 KW~~ | ~~STUCCO~~ | ~~WOOD~~ | ~~R-21~~ | ~~FG~~ | ~~SINGLE PLY OVER PLYWOOD~~ | ~~R-38 + R-18 (3" RIDIGD INSUL)~~ | ~~FG + FOAM~~ | ~~LT WT CONC~~ | ~~R-19~~ | ~~FG~~ | ~~42~~ | ~~14~~ | ~~168~~ | ~~192~~ |
| | | ~~16~~ | ~~3.5T / 2.5T~~ | ~~2 / 2~~ | ~~5 KW~~ | ~~STUCCO~~ | ~~WOOD~~ | ~~R-21~~ | ~~FG~~ | ~~SINGLE PLY OVER PLYWOOD~~ | ~~R-38 + R-18 (3" RIDIGD INSUL)~~ | ~~FG + FOAM~~ | ~~LT WT CONC~~ | ~~R-19~~ | ~~FG~~ | ~~42~~ | ~~14~~ | ~~168~~ | ~~192~~ |
| ** ~~96' X 40'~~ ~~(FOUR 24' X 40')~~ | ~~3,840~~ | ~~14~~ | ~~3.5T~~ | ~~4~~ | ~~5 KW~~ | ~~STUCCO~~ | ~~WOOD~~ | ~~R-21~~ | ~~FG~~ | ~~SINGLE PLY OVER PLYWOOD~~ | ~~R-38 + R-18 (3" RIDIGD INSUL)~~ | ~~FG + FOAM~~ | ~~LT WT CONC~~ | ~~R-19~~ | ~~FG~~ | ~~48~~ | ~~16~~ | ~~168~~ | ~~256~~ |
| | | ~~15~~ | ~~3.5T~~ | ~~4~~ | ~~5 KW~~ | ~~STUCCO~~ | ~~WOOD~~ | ~~R-21~~ | ~~FG~~ | ~~SINGLE PLY OVER PLYWOOD~~ | ~~R-38 + R-18 (3" RIDIGD INSUL)~~ | ~~FG + FOAM~~ | ~~LT WT CONC~~ | ~~R-19~~ | ~~FG~~ | ~~48~~ | ~~16~~ | ~~168~~ | ~~256~~ |
| | | ~~16~~ | ~~3.5T~~ | ~~4~~ | ~~5 KW~~ | ~~STUCCO~~ | ~~WOOD~~ | ~~R-21~~ | ~~FG~~ | ~~SINGLE PLY OVER PLYWOOD~~ | ~~R-38 + R-18 (3" RIDIGD INSUL)~~ | ~~FG + FOAM~~ | ~~LT WT CONC~~ | ~~R-19~~ | ~~FG~~ | ~~48~~ | ~~16~~ | ~~168~~ | ~~256~~ |
| ** ~~108' X 40'~~ ~~(THREE 24' X 40' + ONE 36' X 40')~~ | ~~4,320~~ | ~~14~~ | ~~3.5T / 2.5T~~ | ~~3 / 2~~ | ~~5 KW~~ | ~~STUCCO~~ | ~~WOOD~~ | ~~R-21~~ | ~~FG~~ | ~~SINGLE PLY OVER PLYWOOD~~ | ~~R-38 + R-18 (3" RIDIGD INSUL)~~ | ~~FG + FOAM~~ | ~~LT WT CONC~~ | ~~R-19~~ | ~~FG~~ | ~~54~~ | ~~18~~ | ~~210~~ | ~~256~~ |
| | | ~~15~~ | ~~3.5T / 2.5T~~ | ~~3 / 2~~ | ~~5 KW~~ | ~~STUCCO~~ | ~~WOOD~~ | ~~R-21~~ | ~~FG~~ | ~~SINGLE PLY OVER PLYWOOD~~ | ~~R-38 + R-18 (3" RIDIGD INSUL)~~ | ~~FG + FOAM~~ | ~~LT WT CONC~~ | ~~R-19~~ | ~~FG~~ | ~~54~~ | ~~18~~ | ~~210~~ | ~~256~~ |
| | | ~~16~~ | ~~3.5T / 2.5T~~ | ~~3 / 2~~ | ~~5 KW~~ | ~~STUCCO~~ | ~~WOOD~~ | ~~R-21~~ | ~~FG~~ | ~~SINGLE PLY OVER PLYWOOD~~ | ~~R-38 + R-18 (3" RIDIGD INSUL)~~ | ~~FG + FOAM~~ | ~~LT WT CONC~~ | ~~R-19~~ | ~~FG~~ | ~~54~~ | ~~18~~ | ~~210~~ | ~~256~~ |
| ** ~~120' X 40'~~ ~~(FIVE 24' X 40')~~ | ~~4,800~~ | ~~14~~ | ~~3.5T~~ | ~~5~~ | ~~5 KW~~ | ~~STUCCO~~ | ~~WOOD~~ | ~~R-21~~ | ~~FG~~ | ~~SINGLE PLY OVER PLYWOOD~~ | ~~R-38 + R-18 (3" RIDIGD INSUL)~~ | ~~FG + FOAM~~ | ~~LT WT CONC~~ | ~~R-19~~ | ~~FG~~ | ~~60~~ | ~~20~~ | ~~210~~ | ~~320~~ |
| | | ~~15~~ | ~~3.5T~~ | ~~5~~ | ~~5 KW~~ | ~~STUCCO~~ | ~~WOOD~~ | ~~R-21~~ | ~~FG~~ | ~~SINGLE PLY OVER PLYWOOD~~ | ~~R-38 + R-18 (3" RIDIGD INSUL)~~ | ~~FG + FOAM~~ | ~~LT WT CONC~~ | ~~R-19~~ | ~~FG~~ | ~~60~~ | ~~20~~ | ~~210~~ | ~~320~~ |
| | | ~~16~~ | ~~3.5T~~ | ~~5~~ | ~~5 KW~~ | ~~STUCCO~~ | ~~WOOD~~ | ~~R-21~~ | ~~FG~~ | ~~SINGLE PLY OVER PLYWOOD~~ | ~~R-38 + R-18 (3" RIDIGD INSUL)~~ | ~~FG + FOAM~~ | ~~LT WT CONC~~ | ~~R-19~~ | ~~FG~~ | ~~60~~ | ~~20~~ | ~~210~~ | ~~320~~ |

NOTES:
1. THE ABOVE CHART ARE DESIGNED WITH THE HEAT PUMP MODEL DEMONSTRATED WITH THE WORST CASE MATERIALS, SIZES AND QUANTITIES FOR EACH BUILDING SIZES (SMALLEST AND LARGEST) IN THE WORST CASE CLIMATE ZONES AND CAN BE PLACED IN ANY CLIMATE ZONE IN CA
2. THE BUILDINGS SIZES THAT ARE IN BETWEEN THE SMALLEST AND LARGEST FOLLOWS SUITS TO EACH INCREMENT SIZE
3. THE ABOVE CHART CAN BE USED AS GUIDANCE WHEN PLACING BUILDINGS IN ZONES 1-13 WITH OR WITHOUT WORST CASE BUILDING MATERIALS, USING OTHER MATERIALS ON THE PC THAT ARE EFFICENT, WITH THE EXCEPTION OF THE HVAC TONAGE AND/OR QUANTITY INCREASING OR DECREASING AND NOT TO EXCEED THE MAX NUMBER OF INTERIOR LIGHTS, SKYLIGHTS, METAL EXTERIOR DOOR SF AND METAL WINDOW SF, A REVISED BUILDING ANALYSIS REPORT IS NOT REQUIRED
4. WHEN THE HVAC TONAGE AND/OR HVAC QTY IS EITHER INCREASED OR DECREASED FROM THE CHART ABOVE, A REVISED BUILDING ENERGY ANALYSIS REPORT SHALL BE SUBMITTED TO DSA AT THE TIME OF THE SITE SPECIFIC SUBMITTAL PER DSA PR 18-02
5. WHEN EITHER THE MAXIMUM NUMBER OF INTERIOR LIGHTS, METAL EXTERIOR DOOR SF AND METAL WINDOW SF ARE INCREASED FROM THE CHART ABOVE, A REVISED BUILDING ENERGY ANALYSIS REPORT SHALL BE SUBMITTED TO DSA AT THE TIME OF THE SITE SPECIFIC SUBMITTAL PER DSA PR 18-02
6. WHEN THE BUILDING OCCUPANCY IS CHANGED, A REVISE BUILDING ENERGY ANALYSIS REPORT SHALL BE SUBMITTED TO DSA AT THE TIME OF THE SITE SPECIFIC SUBMITTAL PER DSA PR 18-02
7. SEE SHEET M3.4 FOR PERFORMANCE RUN TABLE REFERENCE

* = SEE SHEET M0.0 FOR EQUIPMENT SHCEDULE

** = SEE SHEET A0.5 FOR EXPANDABLE BUILDING OPTIONS

FG = FIBERGLASS BATT


## WORST CASE CONDITIONS - WALL MOUNT HEAT PUMPS

| BUILDING SIZE | BUILDING SF | CLIMATE ZONES | * WORSE CASE EQUIPMENT SIZE (TONS) | HEAT PUMP QUANTITY | WORSE CASE HEAT STRIP | WORSE CASE EXT FINISH TYPE | WORSE CASE WALL TYPE | WORSE CASE WALL INSULATION VALUE | WORSE CASE WALL INSULATION TYPE | WORSE CASE ROOF TYPE & FINISH | WORSE CASE ROOF INSULATION VALUE | WORSE CASE ROOF INSULATION TYPE | WORSE CASE SUB-FLOOR TYPE | WORSE CASE SUB-FLOOR INSULATION VALUE | WORSE CASE FLOOR INSULATION TYPE | MAX INTERIOR CEILING LIGHTS (2X4) ON PC | MAX SKYLIGHT QTY ON PC | MAX EXT METAL DOOR SF MODELED FOR STANDARD CLASSROOM | MAX WINDOW SF MODELED FOR STANDARD CLASSROOM |
|---|---|---|---|---|---|---|---|---|---|---|---|---|---|---|---|---|---|---|---|
| 24' X 40' | 960 | 14 | 3.5T | 1 | 5 KW | STUCCO | WOOD | R-21 | FG | SINGLE PLY OVER PLYWOOD | R-38 + R-18 (3" RIDIGD INSUL) | FG + FOAM | LT WT CONC | R-19 | FG | 12 | 4 | 42 | 64 |
| | | 15 | 3.5T | 1 | 5 KW | STUCCO | WOOD | R-21 | FG | SINGLE PLY OVER PLYWOOD | R-38 + R-18 (3" RIDIGD INSUL) | FG + FOAM | LT WT CONC | R-19 | FG | 12 | 4 | 42 | 64 |
| | | 16 | 3.5T | 1 | 5 KW | STUCCO | WOOD | R-21 | FG | SINGLE PLY OVER PLYWOOD | R-38 + R-18 (3" RIDIGD INSUL) | FG + FOAM | LT WT CONC | R-19 | FG | 12 | 4 | 42 | 64 |
| 36' X 40' | 1,440 | 14 | 3.5T | 2 | 5 KW | STUCCO | WOOD | R-21 | FG | SINGLE PLY OVER PLYWOOD | R-38 + R-18 (3" RIDIGD INSUL) | FG + FOAM | LT WT CONC | R-19 | FG | 18 | 6 | 84 | 64 |
| | | 15 | 3.5T | 2 | 5 KW | STUCCO | WOOD | R-21 | FG | SINGLE PLY OVER PLYWOOD | R-38 + R-18 (3" RIDIGD INSUL) | FG + FOAM | LT WT CONC | R-19 | FG | 18 | 6 | 84 | 64 |
| | | 16 | 3.5T | 2 | 5 KW | STUCCO | WOOD | R-21 | FG | SINGLE PLY OVER PLYWOOD | R-38 + R-18 (3" RIDIGD INSUL) | FG + FOAM | LT WT CONC | R-19 | FG | 18 | 6 | 84 | 64 |
| 48' X 40' (TWO 24' X 40' INCR) | 1,920 | 14 | 3.5T | 1 | 5 KW | STUCCO | WOOD | R-21 | FG | SINGLE PLY OVER PLYWOOD | R-38 + R-18 (3" RIDIGD INSUL) | FG + FOAM | LT WT CONC | R-19 | FG | 24 | 8 | 84 | 128 |
| | | 15 | 3.5T | 1 | 5 KW | STUCCO | WOOD | R-21 | FG | SINGLE PLY OVER PLYWOOD | R-38 + R-18 (3" RIDIGD INSUL) | FG + FOAM | LT WT CONC | R-19 | FG | 24 | 8 | 84 | 128 |
| | | 16 | 3.5T | 1 | 5 KW | STUCCO | WOOD | R-21 | FG | SINGLE PLY OVER PLYWOOD | R-38 + R-18 (3" RIDIGD INSUL) | FG + FOAM | LT WT CONC | R-19 | FG | 24 | 8 | 84 | 128 |
| ** 60' X 40' (24' X 40' + 36' X 40') | 2,400 | 14 | 3.5T | 1 / 2 | 5 KW | STUCCO | WOOD | R-21 | FG | SINGLE PLY OVER PLYWOOD | R-38 + R-18 (3" RIDIGD INSUL) | FG + FOAM | LT WT CONC | R-19 | FG | 30 | 10 | 126 | 128 |
| | | 15 | 3.5T | 1 / 2 | 5 KW | STUCCO | WOOD | R-21 | FG | SINGLE PLY OVER PLYWOOD | R-38 + R-18 (3" RIDIGD INSUL) | FG + FOAM | LT WT CONC | R-19 | FG | 30 | 10 | 126 | 128 |
| | | 16 | 3.5T | 1 / 2 | 5 KW | STUCCO | WOOD | R-21 | FG | SINGLE PLY OVER PLYWOOD | R-38 + R-18 (3" RIDIGD INSUL) | FG + FOAM | LT WT CONC | R-19 | FG | 30 | 10 | 126 | 128 |
| ** 72' X 40' (THREE 24' X 40') | 2,880 | 14 | 3.5T | 3 | 5 KW | STUCCO | WOOD | R-21 | FG | SINGLE PLY OVER PLYWOOD | R-38 + R-18 (3" RIDIGD INSUL) | FG + FOAM | LT WT CONC | R-19 | FG | 36 | 12 | 126 | 192 |
| | | 15 | 3.5T | 3 | 5 KW | STUCCO | WOOD | R-21 | FG | SINGLE PLY OVER PLYWOOD | R-38 + R-18 (3" RIDIGD INSUL) | FG + FOAM | LT WT CONC | R-19 | FG | 36 | 12 | 126 | 192 |
| | | 16 | 3.5T | 3 | 5 KW | STUCCO | WOOD | R-21 | FG | SINGLE PLY OVER PLYWOOD | R-38 + R-18 (3" RIDIGD INSUL) | FG + FOAM | LT WT CONC | R-19 | FG | 36 | 12 | 126 | 192 |
| ** 84' X 40' (TWO 24' X 40' + ONE 36' X 40') | 3,360 | 14 | 3.5T | 2 / 2 | 5 KW | STUCCO | WOOD | R-21 | FG | SINGLE PLY OVER PLYWOOD | R-38 + R-18 (3" RIDIGD INSUL) | FG + FOAM | LT WT CONC | R-19 | FG | 42 | 14 | 168 | 192 |
| | | 15 | 3.5T | 2 / 2 | 5 KW | STUCCO | WOOD | R-21 | FG | SINGLE PLY OVER PLYWOOD | R-38 + R-18 (3" RIDIGD INSUL) | FG + FOAM | LT WT CONC | R-19 | FG | 42 | 14 | 168 | 192 |
| | | 16 | 3.5T | 2 / 2 | 5 KW | STUCCO | WOOD | R-21 | FG | SINGLE PLY OVER PLYWOOD | R-38 + R-18 (3" RIDIGD INSUL) | FG + FOAM | LT WT CONC | R-19 | FG | 42 | 14 | 168 | 192 |
| ** 96' X 40' (FOUR 24' X 40') | 3,840 | 14 | 3.5T | 4 | 5 KW | STUCCO | WOOD | R-21 | FG | SINGLE PLY OVER PLYWOOD | R-38 + R-18 (3" RIDIGD INSUL) | FG + FOAM | LT WT CONC | R-19 | FG | 48 | 16 | 168 | 256 |
| | | 15 | 3.5T | 4 | 5 KW | STUCCO | WOOD | R-21 | FG | SINGLE PLY OVER PLYWOOD | R-38 + R-18 (3" RIDIGD INSUL) | FG + FOAM | LT WT CONC | R-19 | FG | 48 | 16 | 168 | 256 |
| | | 16 | 3.5T | 4 | 5 KW | STUCCO | WOOD | R-21 | FG | SINGLE PLY OVER PLYWOOD | R-38 + R-18 (3" RIDIGD INSUL) | FG + FOAM | LT WT CONC | R-19 | FG | 48 | 16 | 168 | 256 |
| ** 108' X 40' (THREE 24' X 40' + ONE 36' X 40') | 4,320 | 14 | 3.5T | 3 / 2 | 5 KW | STUCCO | WOOD | R-21 | FG | SINGLE PLY OVER PLYWOOD | R-38 + R-18 (3" RIDIGD INSUL) | FG + FOAM | LT WT CONC | R-19 | FG | 54 | 18 | 210 | 256 |
| | | 15 | 3.5T | 3 / 2 | 5 KW | STUCCO | WOOD | R-21 | FG | SINGLE PLY OVER PLYWOOD | R-38 + R-18 (3" RIDIGD INSUL) | FG + FOAM | LT WT CONC | R-19 | FG | 54 | 18 | 210 | 256 |
| | | 16 | 3.5T | 3 / 2 | 5 KW | STUCCO | WOOD | R-21 | FG | SINGLE PLY OVER PLYWOOD | R-38 + R-18 (3" RIDIGD INSUL) | FG + FOAM | LT WT CONC | R-19 | FG | 54 | 18 | 210 | 256 |
| ** 120' X 40' (FIVE 24' X 40') | 4,800 | 14 | 3.5T | 5 | 5 KW | STUCCO | WOOD | R-21 | FG | SINGLE PLY OVER PLYWOOD | R-38 + R-18 (3" RIDIGD INSUL) | FG + FOAM | LT WT CONC | R-19 | FG | 60 | 20 | 210 | 320 |
| | | 15 | 3.5T | 5 | 5 KW | STUCCO | WOOD | R-21 | FG | SINGLE PLY OVER PLYWOOD | R-38 + R-18 (3" RIDIGD INSUL) | FG + FOAM | LT WT CONC | R-19 | FG | 60 | 20 | 210 | 320 |
| | | 16 | 3.5T | 5 | 5 KW | STUCCO | WOOD | R-21 | FG | SINGLE PLY OVER PLYWOOD | R-38 + R-18 (3" RIDIGD INSUL) | FG + FOAM | LT WT CONC | R-19 | FG | 60 | 20 | 210 | 320 |

NOTES:
1. THE ABOVE CHART ARE DESIGNED WITH THE HEAT PUMP MODEL DEMONSTRATED WITH THE WORST CASE MATERIALS, SIZES AND QUANTITIES FOR EACH BUILDING SIZES (SMALLEST AND LARGEST) IN THE WORST CASE CLIMATE ZONES AND CAN BE PLACED IN ANY CLIMATE ZONE IN CA
2. THE BUILDINGS SIZES THAT ARE IN BETWEEN THE SMALLEST AND LARGEST FOLLOWS SUITS TO EACH INCREMENT SIZE
3. THE ABOVE CHART CAN BE USED AS GUIDANCE WHEN PLACING BUILDINGS IN ZONES 1-13 WITH OR WITHOUT WORST CASE BUILDING MATERIALS, USING OTHER MATERIALS ON THE PC THAT ARE EFFICENT, WITH THE EXCEPTION OF THE HVAC TONAGE AND/OR QUANTITY INCREASING OR DECREASING AND NOT TO EXCEED THE MAX NUMBER OF INTERIOR LIGHTS, SKYLIGHTS, METAL EXTERIOR DOOR SF AND METAL WINDOW SF, A REVISED BUILDING ANALYSIS REPORT IS NOT REQUIRED
4. WHEN THE HVAC TONAGE AND/OR HVAC QTY IS EITHER INCREASED OR DECREASED FROM THE CHART ABOVE, A REVISED BUILDING ENERGY ANALYSIS REPORT SHALL BE SUBMITTED TO DSA AT THE TIME OF THE SITE SPECIFIC SUBMITTAL PER DSA PR 18-02
5. WHEN EITHER THE MAXIMUM NUMBER OF INTERIOR LIGHTS, METAL EXTERIOR DOOR SF AND METAL WINDOW SF ARE INCREASED FROM THE CHART ABOVE, A REVISED BUILDING ENERGY ANALYSIS REPORT SHALL BE SUBMITTED TO DSA AT THE TIME OF THE SITE SPECIFIC SUBMITTAL PER DSA PR 18-02
6. WHEN THE BUILDING OCCUPANCY IS CHANGED, A REVISE BUILDING ENERGY ANALYSIS REPORT SHALL BE SUBMITTED TO DSA AT THE TIME OF THE SITE SPECIFIC SUBMITTAL PER DSA PR 18-02
7. SEE SHEET M3.4 FOR PERFORMANCE RUN TABLE REFERENCE

* = SEE SHEET M0.0 FOR EQUIPMENT SHCEDULE

** = SEE SHEET A0.5 FOR EXPANDABLE BUILDING OPTIONS

FG = FIBERGLASS BATT


NOT USED

STATE AGENCY APPROVAL

IDENTIFICATION STAMP
DIV. OF THE STATE ARCHITECT
APP. 04-124098 INC:
REVIEWED FOR
SS ☑ FLS ☑ ACS ☑
DATE: 11/14/24


SKC COMPANY
15345 FAIRFIELD RANCH ROAD, SUITE #160, CHINO, CA 91709
OFFICE: (909) 740-3120, FAX: (909) 726-9470
WEBSITE: WWW.SKCCOMPANY.COM
MANUFACTURER #MF1279666 DEALER # DL1279666
GC LIC # 992118 SBE CERTIFIED



ALL DESIGNS INDICATED ON THESE PLANS/DRAWINGS ARE PROPERTY OF SKC, INC AND ARE FOR THE USE BY SKC IN THE SPECIFIED JOB ONLY. THEY SHALL NOT BE USED AND/OR DUPLICATED OR TRANSMITTED IN ANY FORM, FOR ANY PURPOSE WITHOUT THE PRIOR WRITTEN CONSENT OF SKC, INC. ANY UNAUTHORIZED USE OF THESE PLANS SHALL SUBJECT THE OWNER OF SAID PROPERTY TO LIQUIDATED DAMAGES OF $75,000.00. THESE PLANS ARE PROTECTED UNDER THE PROVISIONS OF THE 1976 COPYRIGHT ACT COPYRIGHT SKC, C. ALL RIGHTS RESERVED.


DISTRICT/CUSTOMER NAME:
NEXTMOD

SCHOOL/SITE NAME:
STOCKPILE

SHEET TITLE:
PC HVAC
VARIATION CHART

PRE-CHECK (PC) DOCUMENT
CODE: 2022 CBC
A SEPARATE PROJECT APPLICATION FOR
CONSTRUCTION IS REQUIRED

APPROVED
DIV. OF THE STATE ARCHITECT
APP: 04-122454 PC
REVIEWED FOR
SS ☑ FLS ☑ ACS ☑ CG ☑
DATE: 11/14/2023

PROFESSIONAL OF RECORD ON PC


ORION
Structural Engineering, Inc.
11305 RANCHO BERNARDO RD
SUITE 121
SAN DIEGO CA, 92127
PHONE:(858)-679-1974

REGISTERED PROFESSIONAL ENGINEER
RYAN J. OWEN
EXP. 12/31/24
STRUCTURAL
STATE OF CALIFORNIA

FIRM: Orion Structural Engineering, Inc.
ADDRESS: 11305 Rancho Bernardo Road Ste 121
CITY: San Diego, CA
PHONE: 858-679-1974


PROJECT SPECIFIC PROFESSIONAL OF RECORD

FIRM:
ADDRESS:
CITY:
PHONE:

REVISIONS
1 -
2 -
3 -
4 -
5 -

| | |
|---|---|
| PROJECT NO.: | 00-0000 |
| DRAFTER: | 00 |
| SCALE: | AS NOTED |
| DATE: | 00-00-00 |

SHEET NUMBER
M5.0

10/31/2023 12:12:20 PM

## WIRELESS CONTROLS

'LUTRON' 434 MHZ PICO WIRELESS CONTROL (BATTERY OPERATED, 10 YR MAX BATTERY LIFE) MODEL #PJ2-2BRL-GWH-L01, WALL MOUNT, 2-BUTTON CONTROL WITH RAISE/LOWER DIMMING CAPABILITIES. CONTROLS MUST BE COMBINED WITH 'LUTRON' VIVE POWPAK MODEL #RMJS-8T-DV-B DIMMING MODULE WITH 0-10V CONTROL. SWITCH SHALL COMPLY WITH ENERGY CODE SECTION 130.1(b). SWITCH MAYBE SUBSTITUTED FOR AN APPROVED EQUAL

(D) 'LUTRON' RADIO POWR SAVR WIRELESS DAYLIGHT SENSOR (BATTERY OPERATED, 10 YR MAX BATTERY LIFE) MODEL #LRF2-DCRB-WH. SENSOR MUST BE COMBINED WITH 'LUTRON' VIVE POWPAK MODEL #RMJS-8T-DV-B DIMMING MODULE WITH 0-10V CONTROL. SENSOR MUST BE COMPATIBLE WITH WIRELESS CONTROL. SENSOR SHALL COMPLY WITH ENERGY CODE SECTION 130.1(d)2. SENSOR MAYBE SUBSTITUTED FOR AN APPROVED EQUAL

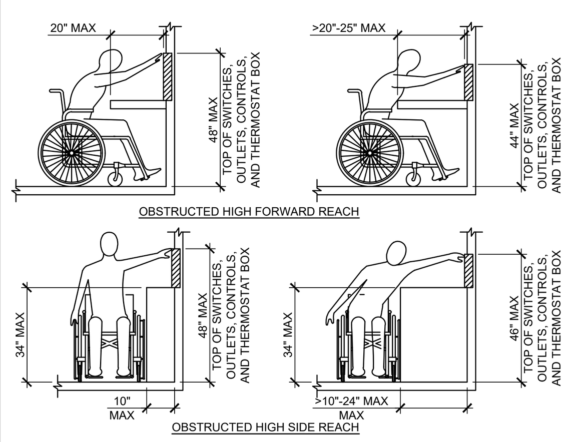


NOTE: FORWARD OR FRONT APPROACH FOR DEVICES MOUNTED ABOVE COUNTER ASSUMES THAT DIRECTLY BELOW THE DEVICE THE COUNTER HAS A 30" MIN WIDTH x 27" MINIMUM HIGH X A DEPTH AS DEEP AS THE DEVICE FROM COUNTER FRONT UP TO 25" MAX. CBC SECTIONS 11B-306 &11B-308.

OBSTRUCTED MOUNTING HEIGHT DETAIL — 2

SCALE: 3/8" = 1'-0"

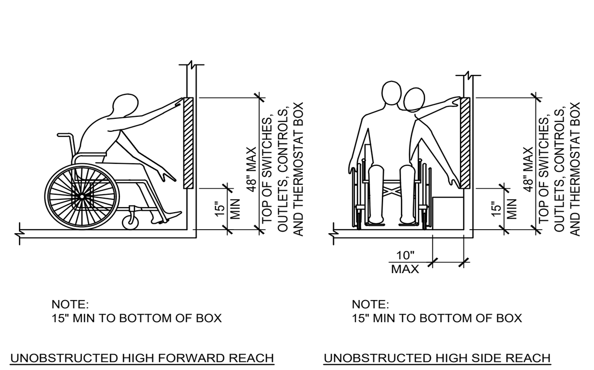


UNOBSTRUCTED MOUNTING HEIGHT DETAIL — 1

SCALE: 3/8" = 1'-0"

## LIGHTING LEGEND & SYMBOLS

| SYMBOL | DESCRIPTION |
|---|---|
| | 'EX-LITE' MODEL #FP24-50W-EM, 2'x4' EMERGENCY LED DROP IN LIGHT FIXTURE WITH 90 MIN BATTERY BACK-UP, WEIGHT 27 LBS, 50 WATT MAX TUNABLE, 5000K COLOR TEMP TUNABLE. BLOCK-OUT FOR RECESSED MOUNT AT DRYWALL APPLICATION |
| | 'EX-LITE' MODEL #FP24-50W, 2'x4' LED DROP IN LIGHT FIXTURE WITH, WEIGHT 27 LBS, 50 WATT MAX TUNABLE, 5000K COLOR TEMP TUNABLE. BLOCK-OUT FOR RECESSED MOUNT AT DRYWALL APPLICATION |
| | 'EX-LITE' MODEL #FP14-40W-EM, 1'x4' EMERGENCY LED DROP IN LIGHT FIXTURE WITH 90 MIN BATTERY BACK-UP, WEIGHT 20 LBS, 40 WATT MAX TUNABLE, 5000K COLOR TEMP TUNABLE. BLOCK-OUT FOR RECESSED MOUNT AT DRYWALL APPLICATION |
| | 'EX-LITE' MODEL #FP14-40W, 1'x4' LED DROP IN LIGHT FIXTURE WITH, WEIGHT 20 LBS, 40 WATT MAX TUNABLE, 5000K COLOR TEMP TUNABLE. BLOCK-OUT FOR RECESSED MOUNT AT DRYWALL APPLICATION |
| | 'EX-LITE' MODEL #FP22-40W-EM, 2'x2' EMERGENCY LED DROP IN LIGHT FIXTURE WITH 90 MIN BATTERY BACK-UP, WEIGHT 14 LBS, 40 WATT MAX TUNABLE, 5000K COLOR TEMP TUNABLE. BLOCK-OUT FOR RECESSED MOUNT AT DRYWALL APPLICATION |
| | 'EX-LITE' MODEL #FP22-40W-EM, 2'x2' EMERGENCY LED DROP IN LIGHT FIXTURE WITH 90 MIN BATTERY BACK-UP, WEIGHT 14 LBS, 40 WATT MAX TUNABLE, 5000K COLOR TEMP TUNABLE. BLOCK-OUT FOR RECESSED MOUNT AT DRYWALL APPLICATION |
| | 'EX-LITE' MODEL #FP24-SF-50W, 2'x4' LED SURFACE MOUNT LIGHT FIXTURE, WEIGHT 27 LBS, 50 WATT MAX TUNABLE, 5000K COLOR TEMP TUNABLE. USE PREFIX 'EM' FOR EMERGENCY LIGHT WITH 90 MIN BATTERY BACK-UP |
| | 'EX-LITE' MODEL #FP14-SF-40W, 1'x4' LED SURFACE MOUNT LIGHT FIXTURE, WEIGHT 20 LBS, 40 WATT MAX TUNABLE, 5000K COLOR TEMP TUNABLE. USE PREFIX 'EM' FOR EMERGENCY LIGHT WITH 90 MIN BATTERY BACK-UP |
| | 'EX-LITE' MODEL #FP22-SF-40W, 2'x2' LED SURFACE MOUNT LIGHT FIXTURE, WEIGHT 14 LBS, 40 WATT MAX TUNABLE, 5000K COLOR TEMP TUNABLE. USE PREFIX 'EM' FOR EMERGENCY LIGHT WITH 90 MIN BATTERY BACK-UP |
| EXIT | SURFACE MOUNTED CEILING DOUBLE FACE EXIT SIGN (UNIVERSAL ARROWS INDICATED AS NEEDED) |
| | EMERGENCY LIGHT W/ 90 MIN BATTERY BACK-UP PACK |
| EXIT | WALL OR CEILING MOUNTED LIGHTED EXIT SIGN W/ 90 MIN BATTERY BACK-UP PACK @ +2" ABOVE FLOOR BASE (AS APPLICABLE) |
| EXIT | WALL OR CEILING MOUNTED EMERGENCY EXIT LIGHT W/ 90 MIN BATTERY BACK-UP PACK |
| | EXTERIOR LIGHT: CTL #LWP15BZ/DL/P, 15 WATTS, SURFACE MOUNTED AT 80" MIN A.F.F. TO BOTTOM OF LIGHT UNO, CONTROLLED BY PHOTOCELL |
| E | EXTERIOR LIGHT WITH 90 MIN BATTERY BACK-UP PACK: MULE LIGHTING #MERU-LED-ACEM-DB, 17 WATTS, SURFACE MOUNTED AT 80" MIN A.F.F. TO BOTTOM OF LIGHT UNO, CONTROLLED BY PHOTOCELL |
| $K | KEY OPERATED SWITCH. INSTALL PER MOUNTING HEIGHT DETAIL U.N.O. |
| | MANUAL DIMMING WITH COMBINED BUILT-IN OCCUPANCY SENSOR: LUTRON 'MAESTRO' MS-Z101. THIS IS SWITCH IS APPLICABLE FOR DIMMING LED BULB, CFL BULB, INCANDESCENT AND DIMMABLE FLUORESCENT BALLAST WITH MAX 20 FT RANGE FROM WALL. REFER TO CATALOG CUT SHEET FOR ADDITIONAL INFORMATION. INSTALL PER MOUNTING HEIGHT DETAIL UNO. SWITCH SHALL COMPLY WITH ENERGY CODE SECTION 130.1(b). SWITCH MAYBE SUBSTITUTED FOR AN APPROVED EQUAL |
| | MANUAL DIMMING (CAN BE COMBINED WITH CEILING MOUNTED OCCUPANCY SENSOR): LUTRON 'DIVA' DVSTV-XX. THIS IS SWITCH IS APPLICABLE FOR DIMMING LED BULB, CFL BULB, INCANDESCENT AND DIMMABLE FLUORESCENT BALLAST. APPROX 1500 SQ FT COVERAGE 360° HAS A 3-WAY SWITCHING CAPABILITIES. REFER TO CATALOG CUT SHEET FOR ADDITIONAL INFORMATION. INSTALL PER MOUNTING HEIGHT DETAIL UNO. SWITCH SHALL COMPLY WITH ENERGY CODE SECTION 130.1(b). SWITCH MAYBE SUBSTITUTED FOR AN APPROVED EQUAL |

## POWER LEGEND & SYMBOLS

| SYMBOL | DESCRIPTION |
|---|---|
| F | DISCONNECT SWITCH H.P. RATED 600 VOLTS RATED 'F' INDICATES FUSE TYPE. FUSES PER APPROVED MANUFACTURES DRAWINGS. |
| | SINGLE PLEX RECEPTACLE OUTLET (20 AMPS, 125 VOLTS). INSTALL PER MOUNTING HEIGHT DETAIL U.N.O. |
| | DUPLEX RECEPTACLE OUTLET (20 AMPS, 125 VOLTS). INSTALL PER MOUNTING HEIGHT DETAIL U.N.O. |
| | FOUR PLEX RECEPTACLE OUTLET (20 AMPS, 125 VOLTS). INSTALL PER MOUNTING HEIGHT DETAIL U.N.O. |
| | SWITCH CONTROLLED DUPLEX RECEPTACLE OUTLET (20 AMPS, 125 VOLTS). INSTALL PER MOUNTING HEIGHT DETAIL U.N.O. |
| GFI | DUPLEX RECEPTACLE OUTLET (20 AMPS, 125 VOLTS GFI TYPE). INSTALL PER MOUNTING HEIGHT DETAIL U.N.O. |
| WP | WEATHERPROOF DUPLEX RECEPTACLE OUTLET (20 AMPS, 125 VOLTS GFI TYPE). INSTALL PER MOUNTING HEIGHT DETAIL. |
| | RECESSED CEILING MOUNTED DUPLEX RECEPTACLE OUTLET, CONVENIENCE (20 AMPS, 125 VOLTS) |
| DED | DUPLEX RECEPTACLE OUTLET ON DEDICATED CIRCUIT (20 AMPS, 125 VOLTS). INSTALL PER MOUNTING HEIGHT DETAIL. |
| | FLOOR DUPLEX BOX |
| J WP | WATER PROOF JUNCTION BOX WITH COVER |
| J | WALL JUNCTION BOX |
| J | ATTIC JUNCTION BOX |
| | CLOCK W/CLOCK OUTLET @ +8'-0" |
| M | 'WATTSTOPPER MODEL #DT300 CEILING MOUNTED OCCUPANCY MOTION SENSOR |
| | BRANCH PANEL BOARD, WALL MOUNTED, SEE PLANS AND SCHEDULE (SURFACE MOUNTED) |
| | BRANCH PANEL BOARD, WALL MOUNTED, SEE PLANS AND SCHEDULE (RECESSED MOUNTED) |
| | EXHAUST FAN - SEE MECHANICAL PLANS FOR SCHEDULE |
| | EXHAUST FAN - SEE MECHANICAL PLANS FOR SCHEDULE |
| | EXHAUST FAN - SEE MECHANICAL PLANS FOR SCHEDULE |

## LOW VOLTAGE LEGEND & SYMBOLS

| SYMBOL | DESCRIPTION |
|---|---|
| S | OUTDOOR WEATHER PROOF SPEAKER |
| TV | TV OUTLET. INSTALL PER MOUNTING HEIGHT DETAIL U.N.O. |
| IC | INTERCOM OUTLET. INSTALL PER MOUNTING HEIGHT DETAIL U.N.O. |
| ■ | SECURITY SYSTEM DOOR SWITCH, MOUNTED AT TOP OF DOOR JAMB |
| SP | CEILING MOUNTED SPEAKER |
| | HOME RUN TO DESTINATION AS INDICATED. REFER TO CONDUIT SYMBOL ABOVE |
| | CEILING MOUNTED STROBE OR SPEAKER |
| | WALL MOUNTED STROBE OR SPEAKER. INSTALL PER MOUNTING DETAIL UNO |
| | PULL STATION J-BOX W/ 3/4"Ø CONDUIT. INSTALL PER MOUNTING HEIGHT DETAIL U.N.O. |
| | EXT. HORN OR SPEAKER J-BOX W/ 3/4"Ø CONDUIT AT +90" A.F.F. |
| S | SMOKE DETECTOR AT CEILING |
| H | HEAT DETECTOR IN ATTIC SPACE |
| | FLOOR DATA BOX |
| | FLOOR VOICE DATA BOX |
| △ | DATA OUTLET |
| ▲ | PHONE OUTLET |
| | DATA/VOICE OUTLET |
| J | CEILING MOUNTED JUNCTION BOX |
| | CEILING MOUNTED DATA BOX |
| | CEILING MOUNTED VOICE DATA BOX |
| PP | POWER PACK LOW VOLTAGE TRANSFORMER |

## GENERAL NOTES

1. ALL FIRE ALARM SHOULD BE HOMERUN TO SINGLE POINT OF CONNECTION W/ 3/4" CO (UNO)
2. ALL LOW VOLTAGE CONDUIT RUNS ARE STUBBED FROM OUTLET BOX TO ATTIC SPACE (UNO). USE 1"Ø CO FOR ALL OUTLET STUBS (UNO)
3. ALL WIRING & DEVICES FOR LOW VOLTAGE SYSTEMS INCLUDING BUT NOT LIMITED TOO FIRE ALARM SYSTEMS ARE BY OTHERS
4. VERIFY ALL FIRE ALARM DEVICE LOCATION W/ AOR'S ELECTRICAL DWG'S FOR PROJECT SPECIFIC DESIGN
5. DRAWINGS ARE DIAGRAMMATIC AND INDICATE GENERAL ARRANGEMENT OF SYSTEMS AND SCOPE OF WORK. MAINTAIN HEADROOM AND MINIMUM CODE REQUIRED WORKING CLEARANCES AT ALL TIMES
6. CONTRACTOR SHALL COORDINATE THE LOCATION OF ALL WALL OUTLET BOXES FOR SWITCHES, BELL/STROBES, FIRE ALARM PULL STATIONS, RECEPTACLES ETC WITH CABINETS, FURNITURE, EQUIPMENT ETC, TO AVOID CONFLICT
7. SEE MECHANICAL AND PLUMBING DRAWINGS AND SPECIFICATION FOR ADDITIONAL CONNECTION REQUIREMENTS TO CONTROL PANELS, CONTROL TRANSFORMERS, POWER FOR CONTROL SYSTEM EP AND PE SWITCHES, TIME CLOCKS, VALVES, T-STATS, RELAYS, DUCT SMOKE DETECTOR LOCATIONS, ETC. INDICATED ON CONTROL WIRING DIAGRAMS. ELECTRICAL CONTRACTOR SHALL VERIFY FINAL CONTROL WIRING REQUIREMENTS PRIOR TO ANY WORK AND PROVIDE ALL NECESSARY DEVICES AND CONNECTIONS AS REQUIRED
8. ALL EXTERIOR ELECTRICAL DEVICES AND EQUIPMENT INCLUDING THOSE THAT ARE EXPOSED TO OUTSIDE ENVIRONMENT (UP TO 16') SHALL BE WEATHERPROOF TYPE, NEMA 3R
9. ALL ELECTRICAL POWER LIGHTING, TELEPHONE OR SIGNAL WIRING IN FIRE RATED WALL IS TO BE INSTALLED IN A METALLIC CONDUIT SYSTEM
10. ALL ELECTRIC MATERIAL SHALL BE LISTED BY "UL" FOR THE TYPE OF APPLICATION AND "UL" LABEL SHALL APPEAR ON ALL ELECTRICAL EQUIPMENT.
11. ALL DISTRIBUTION AND CONTROL EQUIPMENT (SUCH AS CB's, SWITCHES, CONTRACTORS, ETC), TERMINATIONS SHALL BE FULLY RATED PER UL AS FOLLOWS:
    a. 125A OR LESS : 60°C OR MORE
    b. MORE THAN 125A : 75°C OR MORE
12. REFER TO ENERGY CODE TABLE 140.6-A FOR LIGHTING CONTROL TYPES
13. LIGHTING CONTROLS ACCEPTANCE TEST MUST BE PERFORMED BY A CERTIFIED LIGHTING CONTROLS ACCEPTANCE TEST TECHNICIAN (ATT). MECHANICAL SYSTEM ACCEPTANCE TEST MUST BE PERFORMED BE A CERTIFIED MECHANICAL ATT FOR PROJECT SUBMITTED ON OR AFTER OCTOBER 1, 2021. A LISTING OF CERTIFIED ATT'S CAN BE FOUND AT:

    HTTPS://WWW.ENERGY.CA.GOV/PROGRAMS-AND-TOPICS/PROGRAMS/ACCEPTANCE-TEST-TECHNICIAN-CERTIFICATION-PROVIDER- PROGRAM/ACCEPTANCE

    THE ACCEPTANCE TESTING PROCEDURE MUST BE REPEATED, AND DEFICIENCIES MUST BE CORRECTED BY THE BUILDER OR INSTALLING CONTRACTOR UNTIL THE CONSTRUCTION/INSTALLATION OF THE SPECIFIED SYSTEMS CONFORMS AND PASS THE REQUIRED ACCEPTANCE CRITERIA. PROJECT INSPECTORS WILL BE COLLECTING THE FORMS TO CONFIRM THAT THE REQUIRED ACCEPTANCE TEST HAVE BEEN COMPLETED

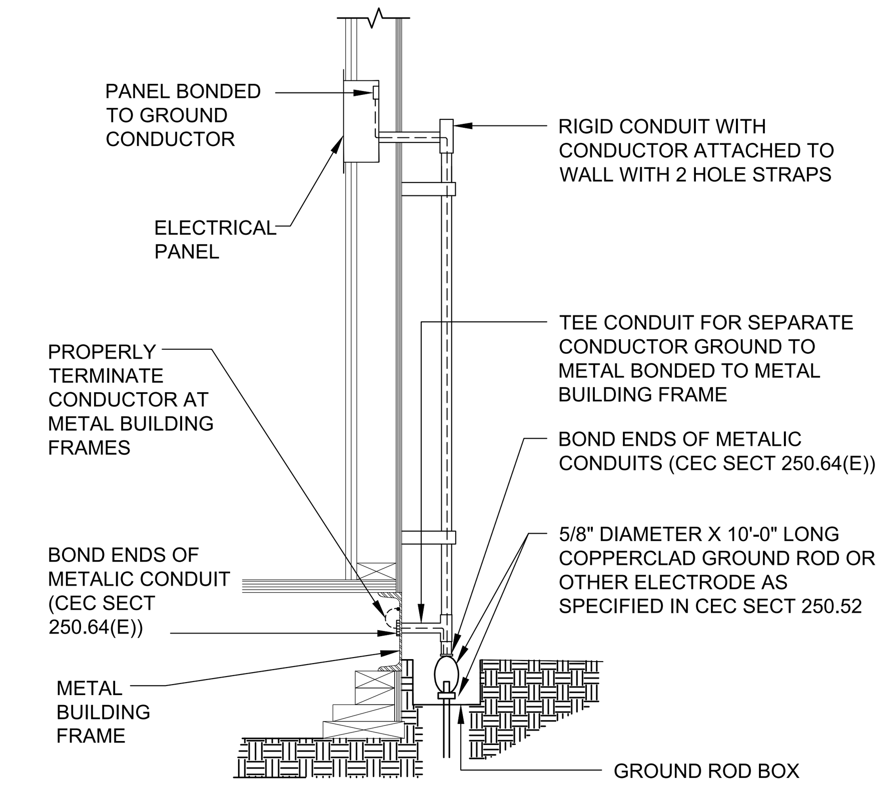


(REFER TO CEC TABLE 250 FOR THE ITEMS BELOW AND DSA IR E-1)

NOTES:
1. SIZE OF CONDUCTORS SHALL COMPLY WITH CEC TABLE 250.66
2. BOND SEPARATE CONDUCTORS FROM GROUND ROD TO ELECTRICAL PANEL AND TO METAL BUILDING FRAME (CEC 250.52). IN ADDITION TO THE DETAIL SHOWN ABOVE, BOND THE ELECTRICAL GROUND TO METAL UNDERGROUND WATER PIPE IN DIRECT CONTACT WITH THE EARTH FOR 10 FT OR MORE, IF AVAILABLE (CEC 250.52), EXCEPT FIRE SPRINKLER SYSTEM PIPING.
3. ALL MODULES OF METAL FRAME BUILDINGS SHALL BE ELECTRICALLY BONDED TOGETHER. (BOLTING ONLY IS NOT ACCEPTABLE BONDING).
4. CHECK RESISTANCE TO GROUND. IF RESISTANCE EXCEEDS 25 OHMS, INSTALL ADDITIONAL GROUND ROD GREATER THAN SIX FEET AWAY (CEC 250.53.E.2). ONCE THE SECOND GROUND ROD IS INSTALLED, ADDITIONAL GROUND RESISTANCE TESTING IS NOT REQUIRED.
5. WHERE MODULAR BUILDING ARE GROUPED TOGETHER, A GROUND ROD MAY BE INSTALLED AT THE END BUILDINGS AND A GROUND RING MAY BE INSTALLED BETWEEN THEM. EACH INTERMEDIATE MODULAR BUILDING MAY BE BONDED TO THAT GROUND RING. WHERE THIS METHOD IS USED, GROUND RESISTANCE TESTING SHALL NOT BE REQUIRED
6. WHERE MODULAR BUILDINGS ARE INSTALLED ON CONCRETE FOUNDATIONS, A UFER GROUND SHALL BE INSTALLED IN THE FOOTING PER [CEC 250.52 (A) (3)]
7. OTHER GROUNDING METHODS IDENTIFIED IN CEC 250 SHALL BE ACCEPTABLE MEANS TO ACHIEVE ADEQUATE GROUNDING OF METAL BUILDINGS IN COMPLIANCE WITH THE ABOVE

ACCEPTABLE GROUNDING DETAIL — 1

NOT BY BUILDING MANUFACTURER

## NOTES

### MEP COMPONENT ANCHORAGE NOTE

ALL MECHANICAL, PLUMBING, AND ELECTRICAL COMPONENTS SHALL BE ANCHORED AND INSTALLED PER THE DETAILS ON THE DSA APPROVED CONSTRUCTION DOCUMENTS. THE FOLLOWING COMPONENTS SHALL BE ANCHORED OR BRACED TO MEET THE FORCE AND DISPLACEMENT REQUIREMENTS PRESCRIBED IN THE 2022 CBC SECTIONS 1617A.1.18 THROUGH 1617A.1.26 AND ASCE 7-16 CHAPTERS 13, 26, AND 30.

1. ALL PERMANENT EQUIPMENT AND COMPONENTS.
2. TEMPORARY, MOVABLE OR MOBILE EQUIPMENT THAT IS PERMANENTLY ATTACHED (E.G. HARD WIRED) TO THE BUILDING UTILITY SERVICES SUCH AS ELECTRICITY, GAS OR WATER. "PERMANENTLY ATTACHED" SHALL INCLUDE ALL ELECTRICAL CONNECTIONS EXCEPT PLUGS FOR 110/220 VOLT RECEPTACLES HAVING A FLEXIBLE CABLE.
3. TEMPORARY, MOVABLE OR MOBILE EQUIPMENT WHICH IS HEAVIER THAN 400 POUNDS OR HAS A CENTER OF MASS LOCATED 4 FEET OR MORE ABOVE THE ADJACENT FLOOR OR ROOF LEVEL THAT DIRECTLY SUPPORT THE COMPONENT IS REQUIRED TO BE RESTRAINED IN A MANNER APPROVED BY DSA

THE FOLLOWING MECHANICAL AND ELECTRICAL COMPONENTS SHALL BE POSITIVELY ATTACHED TO THE STRUCTURE, BUT NEED NOT DEMONSTRATE DESIGN COMPLIANCE WITH THE REFERENCES NOTED ABOVE. THESE COMPONENTS SHALL HAVE FLEXIBLE CONNECTIONS PROVIDED BETWEEN THE COMPONENT AND ASSOCIATED DUCTWORK, PIPING, AND CONDUIT. FLEXIBLE CONNECTIONS MUST ALLOW MOVEMENT IN BOTH TRANSVERSE DIRECTIONS.

A. COMPONENTS WEIGHING LESS THAN 400 POUNDS AND HAVE A CENTER OF MASS LOCATED 4 FEET OR LESS ABOVE THE ADJACENT FLOOR OR ROOF LEVEL THAT DIRECTLY SUPPORT THE COMPONENT.
B. COMPONENTS WEIGHING LESS THAN 20 POUNDS, OR IN THE CASE OF DISTRIBUTED SYSTEMS, LESS THAN 5 POUNDS PER FOOT, WHICH ARE SUSPENDED FROM A ROOF OR FLOOR OR HUNG FROM A WALL.

THE ANCHORAGE OF ALL MECHANICAL, ELECTRICAL, AND PLUMBING COMPONENTS SHALL BE SUBJECT TO THE APPROVAL OF THE DESIGN PROFESSIONAL IN GENERAL RESPONSIBLE CHARGE OR STRUCTURAL ENGINEER DELEGATED RESPONSIBILITY AND ACCEPTANCE BY DSA. THE PROJECT INSPECTOR WILL VERIFY THAT ALL COMPONENTS AND EQUIPMENT HAVE BEEN ANCHORED IN ACCORDANCE WITH THE ABOVE REQUIREMENTS

MECHANICAL PIPING (MP), MECHANICAL DUCTS (MD), PLUMBING PIPING (PP), ELECTRICAL DISTRIBUTION SYSTEMS (E):

MP☐ MD☐ PP☐ E ☒ - OPTION 1: DETAILED ON THE APPROVED DRAWINGS WITH PROJECT SPECIFIC NOTES AND DETAILS

MP☐ MD☐ PP☐ E ☐ - OPTION 2: SHALL COMPLY WITH THE APPLICABLE OSHPD PRE-APPROVAL (OPM #) #________________

### PIPING, DUCTWORK AND ELECTRICAL DISTRIBUTION SYSTEM BRACING NOTE

PIPING, DUCTWORK, AND ELECTRICAL DISTRIBUTION SYSTEMS SHALL BE BRACED TO COMPLY WITH THE FORCES AND DISPLACEMENTS PRESCRIBED IN ASCE 7-16 SECTION 13.3 AS DEFINED IN ASCE 7-16 SECTION 13.6.5, 13.6.6, 13.6.7, 13.6.8, AND 2022 CBC, SECTIONS 1617A.1.24, 1617A.1.25 AND 1617A.1.26.

THE METHOD OF SHOWING BRACING AND ATTACHMENTS TO THE STRUCTURE FOR THE IDENTIFIED DISTRIBUTION SYSTEM ARE AS NOTED BELOW. WHEN BRACING AND ATTACHMENTS ARE BASED ON A PREAPPROVED INSTALLATION GUIDE (E.G. OSHPD OPM FOR 2013 CBC OR LATER), COPIES OF THE BRACING SYSTEM INSTALLATION GUIDE OR MANUAL SHALL BE AVAILABLE ON THE JOBSITE PRIOR TO THE START OF AND DURING THE HANGING AND BRACING OF THE DISTRIBUTION SYSTEMS. THE STRUCTURAL ENGINEER OF RECORD SHALL VERIFY THE ADEQUACY OF THE STRUCTURE TO SUPPORT THE HANGER AND BRACE LOADS.

### FIRE ALARM NOTES

1. FIRE ALARM SYSTEM SHALL COMPLY WITH 2022 CBC CHAPTER 9 SECTION 907.2.3.7 TITLE 24, PART 3, ARTICLE 760 OF THE CALIFORNIA ELECTRICAL CODE,
2. INSTALLATION OF FIRE ALARM SYSTEM SHALL NOT BE STARTED UNTIL DETAIL PLANS, SPECIFICATIONS AND ENGINEERING CALCULATIONS HAVE BEEN ACCEPTED AND SIGNED BY THE ARCHITECT OR STRUCTURAL ENGINEER IN GENERAL CHARGE OF DESIGN. THE SIGNATURE OF THE ARCHITECT OR PROFESSIONAL ENGINEER WHO HAS BEEN DELEGATED RESPONSIBILITY COVERING THE WORK SHOWN ON A PARTICULAR PLAN OR SPECIFICATION, MUST BE APPROVED BY THE DIVISION OF THE STATE ARCHITECT AND STATE FIRE MARSHALL, PER CFC SECTION 907.1.2 & DSA POLICY GL-2
3. A DEDICATED BRANCH CIRCUIT SHALL BE PROVIDED FOR FIRE ALARM EQUIPMENT. THIS CIRCUIT SHALL BE ENERGIZED FROM THE COMMON USE AREA PANEL AND SHALL HAVE NO OTHER OUTLETS. THE BREAKER SHALL HAVE A "RED" LOCKING DEVICE TO BLOCK THE HANDLE IN THE "ON" POSITION. THE CIRCUIT BREAKER SHALL BE LABELED "FIRE ALARM CIRCUIT CONTROL". CIRCUIT ID TO BE LABELED AT THE FIRE PANEL/EXTENDERS, NFPA 72 SECTION 10.6.5.2, 10.6.5.2.2, 10.6.5.2.3, 10.6.5.2.4 & 10.6.5.4
4. UPON COMPLETION OF THE INSTALLATION OF THE PROTECTIVE SIGNALING EQUIPMENT, A SATISFACTORY TEST OF THE ENTIRE SYSTEM SHALL BE MADE IN THE PRESENCE OF THE ENFORCING FIRE AGENCY.
5. ALARMS, SECTION 907, CALIFORNIA FIRE CODE. IF EMERGENCY WARNING SYSTEMS ARE REQUIRED, THEY SHALL ACTIVATE A MEANS OF WARNING THE HEARING IMPAIRED. FLASHING VISUAL WARNING SHALL HAVE A FREQUENCY OF NOT MORE THAN 1 FLASHE BUT NOT MOR THAN 2 FLASHES PER SECOND. LOCATE PER CFC 907.5.2.3 & NFPA 72
6. EMERGENCY VOICE COMMUNICATION PER 2022 CBC 907.2.3. SMOKE DETECTORS TO BE 3' FROM DIFFUSERS.

### GENERAL NOTES CONT:

14. ACCEPTANCE TESTS SHALL BE COMPLETED ON NEWLY INSTALLED OR REPLACEMENT OF LIGHTING CONTROLS BEFORE PROJECT COMPLETION PER THE CALIFORNIA ENERGY CODE SECTION 10-103. ACCEPTANCE TEST MUST BE PERFORMED BY A CERTIFIED ACCEPTANCE TEST TECHNICIAN (ATT). THE ACCEPTANCE TESTING PROCEDURES MUST BE REPEATED, AND DEFICIENCIES CORRECTED UNTIL THE INSTALLATION OF THE SPECIFIED SYSTEMS CONFORM AND PASS THE REQUIRED ACCEPTANCE CRITERIA. COMPLETED NRCA FORMS SHALL BE SUBMITTED TO THE PROJECT INSPECTOR AND THE DISTRICT

NOTE: FORWARD OR FRONT APPROACH FOR DEVICES MOUNTED ABOVE COUNTER ASSUMES THAT DIRECTLY BELOW THE DEVICE THE COUNTER HAS A 30" MIN WIDTH x 27" MINIMUM HIGH X A DEPTH AS DEEP AS THE DEVICE FROM COUNTER FRONT UP TO 25" MAX. CBC SECTIONS 11B-306 &11B-308.

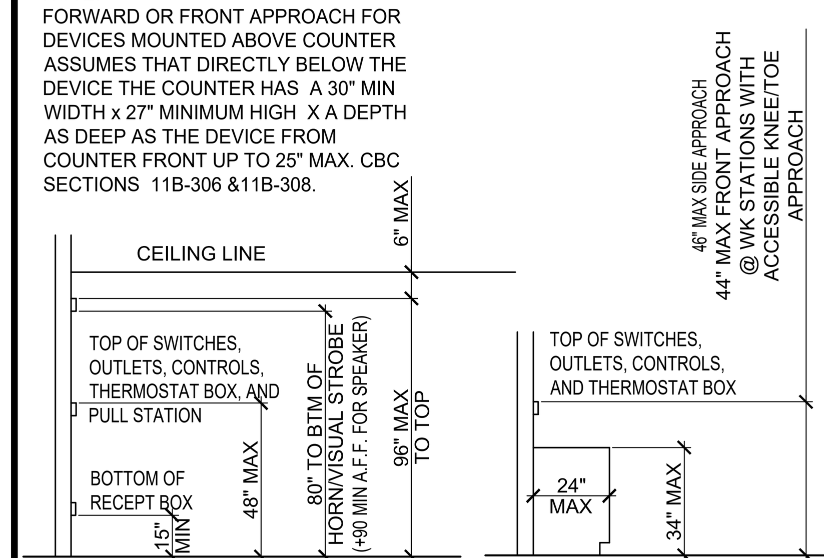


MOUNTING HEIGHT DETAIL — 2

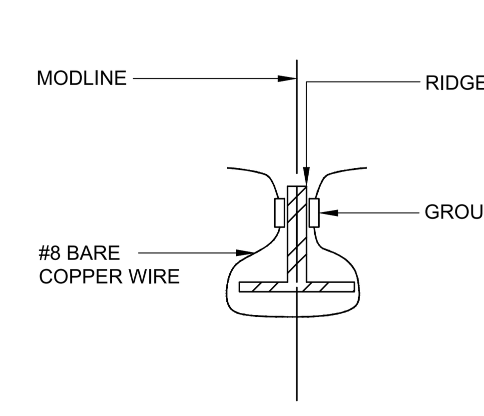


MODULE BONDING — 3

STATE AGENCY APPROVAL

IDENTIFICATION STAMP
DIV. OF THE STATE ARCHITECT
APP. 04-124098 INC:
REVIEWED FOR
SS ☑ FLS ☑ ACS ☑
DATE: 11/14/24

SKC COMPANY

15345 FAIRFIELD RANCH ROAD, SUITE #160, CHINO, CA 91709
OFFICE: (909) 740-3120, FAX: (909) 726-9470
WEBSITE: WWW.SKCCOMPANY.COM
MANUFACTURER #MF1279666 DEALER # DL1279666
GC LIC # 992118 SBE CERTIFIED

ALL DESIGNS INDICATED ON THESE PLANS/DRAWINGS ARE PROPERTY OF SKC, INC AND ARE FOR THE USE BY SKC IN THE SPECIFIED JOB ONLY. THEY SHALL NOT BE USED AND/OR DUPLICATED OR TRANSMITTED IN ANY FORM, FOR ANY PURPOSE WITHOUT THE PRIOR WRITTEN CONSENT OF SKC, INC. ANY UNAUTHORIZED USE OF THESE PLANS SHALL SUBJECT THE OWNER OF SAID PROPERTY TO LIQUIDATED DAMAGES OF $75,000.00. THESE PLANS ARE PROTECTED UNDER THE PROVISIONS OF THE 1976 COPYRIGHT ACT COPYRIGHT SKC, © ALL RIGHTS RESERVED.

DISTRICT/CUSTOMER NAME: NEXTMOD

SCHOOL/SITE NAME: STOCKPILE

SHEET TITLE:

ELECTRICAL LEGENDS & DETAILS

PRE-CHECK (PC) DOCUMENT
CODE: 2022 CBC
A SEPARATE PROJECT APPLICATION FOR CONSTRUCTION IS REQUIRED

APPROVED
DIV. OF THE STATE ARCHITECT
APP: 04-122454 PC
REVIEWED FOR
SS ☑ FLS ☑ ACS ☑ CG ☑
DATE: 11/14/2023

PROFESSIONAL OF RECORD ON PC

ORION Structural Engineering, Inc.
11305 RANCHO BERNARDO RD SUITE 121
SAN DIEGO CA. 92127
PHONE (858) 679-1974

REGISTERED PROFESSIONAL ENGINEER RYAN J. OYER No. S 4437 EXP. 12/31/24 STRUCTURAL STATE OF CALIFORNIA

FIRM: Orion Structural Engineering, Inc.
ADDRESS: 11305 Rancho Bernardo Road Ste 121
CITY: San Diego, CA
PHONE: 858-679-1974

PROJECT SPECIFIC PROFESSIONAL OF RECORD

FIRM:
ADDRESS:
CITY:
PHONE:

REVISIONS

1 -
2 -
3 -
4 -
5 -

| | |
|---|---|
| PROJECT NO.: | 00-0000 |
| DRAFTER: | 00 |
| SCALE: | AS NOTED |
| DATE: | 00-00-00 |

SHEET NUMBER

E0.0

10/31/2023 12:12:35 PM

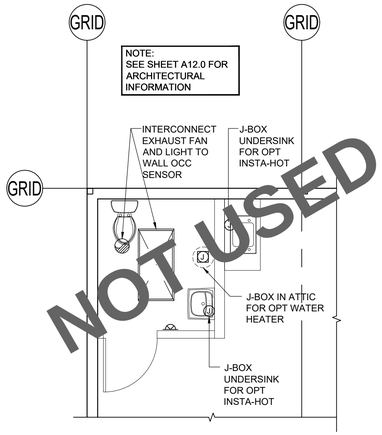


ELECTRICAL PLAN FOR OPT RESTROOM

SCALE: 1/4" = 1'-0"

A

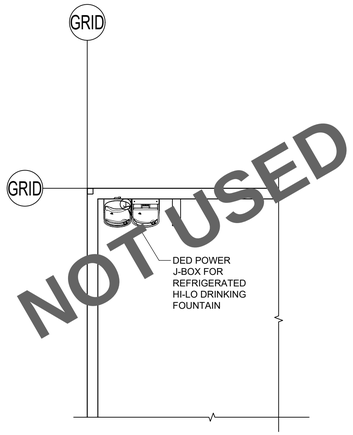


ELECTRICAL FOR OPT REFRIGERATED HI-LO DF

SCALE: 1/4" = 1'-0"

D

## GENERAL NOTES

1. SEE SHEET E0.0 FOR ELECTRICAL, FIRE ALARM AND SIGNAL PLAN DESIGN NOTES
2. PROVIDE EMERGENCY LIGHTING AT ALL EXTERIOR DOORS PER SECTION 1008.2.3. LOCATION OF EMERGENCY LIGHTING TO BE DETERMINED BY SITE ARCHITECT BASED ON PROJECT SPECIFIC DESIGN
3. CBC SECTION 907.5.2.2, EMERGENCY POWER FOR EMERGENCY VOICE COMMUNICATION.
4. SEE DAYLIT FLOOR PLANS FOR DAYLIT LOCATIONS
5. WHEN ELECTRICAL PANEL WEIGHT EXCEEDS >20 LBS, SEE DETAILS FOR ATTACHMENT. (4 / A8.1) OR (10 / A8.1)

PROJECT SPECIFIC (CHECK ONE):

- [x] STANDARD DESIGN AS SHOWN
- [ ] SOLATUBE OPTION. REFERENCE SHEET A11.0

## LOAD CENTER SCHEDULE

PANEL A

VOLTS 120/240 | PHASE 1 | BUSS 100 A | FEED WALL

MAIN BRKR 100 A | WIRE 3 | MOUNT RECESSED | LOCATION INTERIOR

| DESCRIPTION | WATTS AØ | WATTS BØ | WIRE SIZE | BREAKER | POLE | CKT. NO. | A | B | CKT. NO. | POLE | BREAKER | WIRE SIZE | WATTS AØ | WATTS BØ | DESCRIPTION |
|---|---|---|---|---|---|---|---|---|---|---|---|---|---|---|---|
| HEAT PUMP (3.5 TON) | 2967 | - | 6 | 70 | 2 | 1 | ● | | 2 | 1 | 20 | 12 | 526 | - | LIGHTS |
| HEAT PUMP (3.5 TON) | - | 2967 | - | - | - | 3 | | ● | 4 | 1 | 20 | 12 | - | 526 | LIGHTS |
| EXT RECEPT | 180 | - | 12 | 20 | 1 | 5 | ● | | 6 | 1 | 20 | 12 | 42 | - | EXTERIOR LIGHTS |
| - | - | - | - | - | - | 7 | | ● | 8 | 1 | 20 | 12 | - | 1260 | RECEPT |
| - | - | - | - | - | - | 9 | ● | | 10 | 1 | 20 | 12 | 600 | - | *F.A.C.P. |
| - | - | - | - | - | - | 11 | | ● | 12 | - | - | - | - | - | - |
| SUB TOTAL | 3147 | 2967 | | | | | | | | | | | 1168 | 1786 | SUB TOTAL |

LOAD
A 4,315
B 4,753
TOTAL 9,068

L.C.L: 880 x 25% = 220
25% LARGEST MOTOR = 3,120
TOTAL DEMAND = 9,068
20% FUTURE LOAD = 9,068 X 20% = 1,814
TOTAL LOAD DEMAND + FUTURE LOAD = 9,068 + 1,814 = 10,882
MAX DEMAND = 10,882 / 240

TOTAL LOAD
MAX DEMAND W/O FUTURE LOAD 38 AMPS
DEMAND 46 AMPS

*LABEL & LOCK ON DEVICE

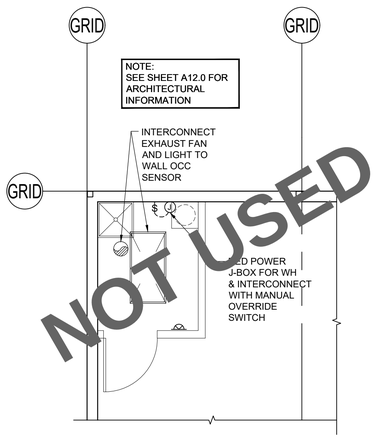


ELECTRICAL PLAN FOR OPT JANITOR RM

SCALE: 1/4" = 1'-0"

B

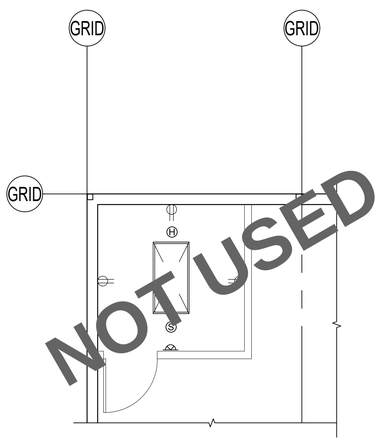


ELECTRICAL FOR OPT OFFICE

SCALE: 1/4" = 1'-0"

C

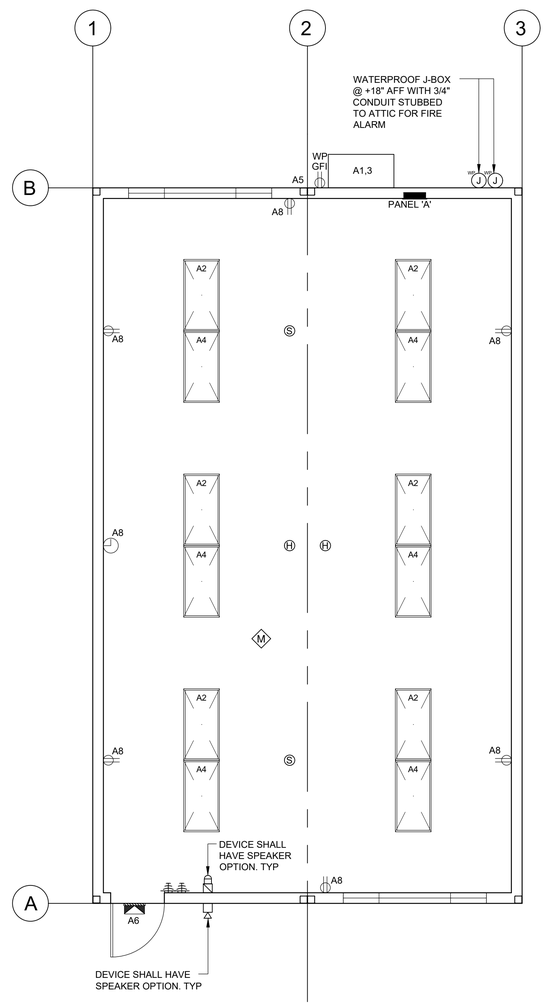


ELECTRICAL PLAN - WALL MOUNTED HVAC (OPTION 'B' LEFT HAND)

SCALE: 1/4" = 1'-0"

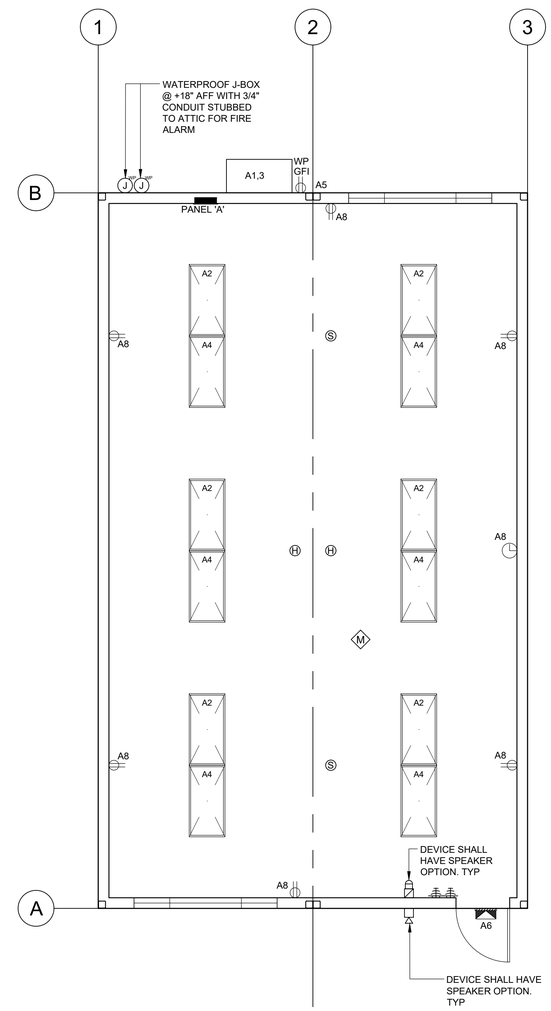


ELECTRICAL PLAN - WALL MOUNTED HVAC (OPTION 'A' RIGHT HAND)

SCALE: 1/4" = 1'-0"

STATE AGENCY APPROVAL

IDENTIFICATION STAMP
DIV. OF THE STATE ARCHITECT
APP. 04-124098 INC:
REVIEWED FOR
SS ☑ FLS ☑ ACS ☑
DATE: 11/14/24


SKC COMPANY
15345 FAIRFIELD RANCH ROAD, SUITE #160, CHINO, CA 91709
OFFICE: (909) 740-3120, FAX: (909) 726-9470
WEBSITE: WWW.SKCCOMPANY.COM
MANUFACTURER #MF1279666 DEALER # DL1279666
GC LIC # 992118 SBE CERTIFIED



ALL DESIGNS INDICATED ON THESE PLANS/DRAWINGS ARE PROPERTY OF SKC, INC AND ARE FOR THE USE BY SKC IN THE SPECIFIED JOB ONLY. THEY SHALL NOT BE USED AND/OR DUPLICATED OR TRANSMITTED IN ANY FORM, FOR ANY PURPOSE WITHOUT THE PRIOR WRITTEN CONSENT OF SKC, INC. ANY UNAUTHORIZED USE OF THESE PLANS SHALL SUBJECT THE OWNER OF SAID PROPERTY TO LIQUIDATED DAMAGES OF $75,000.00. THESE PLANS ARE PROTECTED UNDER THE PROVISIONS OF THE 1976 COPYRIGHT ACT COPYRIGHT SKC, © ALL RIGHTS RESERVED.


DISTRICT/CUSTOMER NAME:
NEXTMOD

SCHOOL/SITE NAME:
STOCKPILE

SHEET TITLE:

ELECTRICAL PLAN
24'X40'
(WALL MOUNTED HVAC)

PRE-CHECK (PC) DOCUMENT
CODE: 2022 CBC
A SEPARATE PROJECT APPLICATION FOR CONSTRUCTION IS REQUIRED

APPROVED
DIV. OF THE STATE ARCHITECT
APP: 04-122454 PC
REVIEWED FOR
SS ☑ FLS ☑ ACS ☑ CG ☑
DATE: 11/14/2023

PROFESSIONAL OF RECORD ON PC


ORION
Structural Engineering, Inc.
11305 RANCHO BERNARDO RD
SUITE 121
SAN DIEGO CA, 92127
PHONE (858) 679-1974
RYAN J. OWEN
C-62027
EXP. 12/31/24
STRUCTURAL
STATE OF CALIFORNIA
REGISTERED PROFESSIONAL ENGINEER

FIRM: Orion Structural Engineering, Inc.
ADDRESS: 11305 Rancho Bernardo Road Ste 121
CITY: San Diego, CA
PHONE: 858-679-1974


PROJECT SPECIFIC PROFESSIONAL OF RECORD

FIRM:
ADDRESS:
CITY:
PHONE:

REVISIONS

1 -
2 -
3 -
4 -
5 -

| | |
|---|---|
| PROJECT NO.: | 00-0000 |
| DRAFTER: | 00 |
| SCALE: | AS NOTED |
| DATE: | 00-00-00 |

SHEET NUMBER

E1.0

10/31/2023 12:12:54 PM

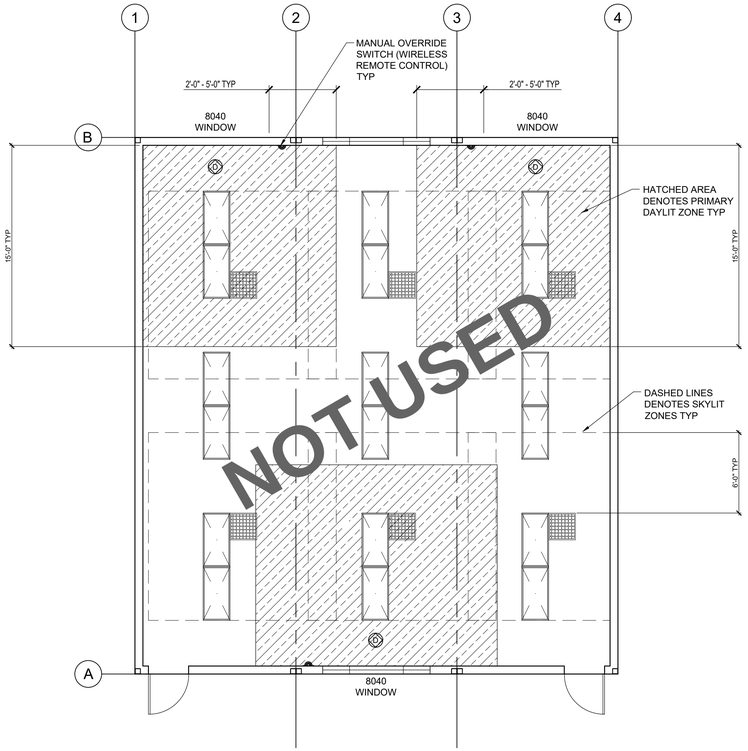


36x40
(USED IN FLOOR PLANS 60'x40', 84'x40' & 108'x40')

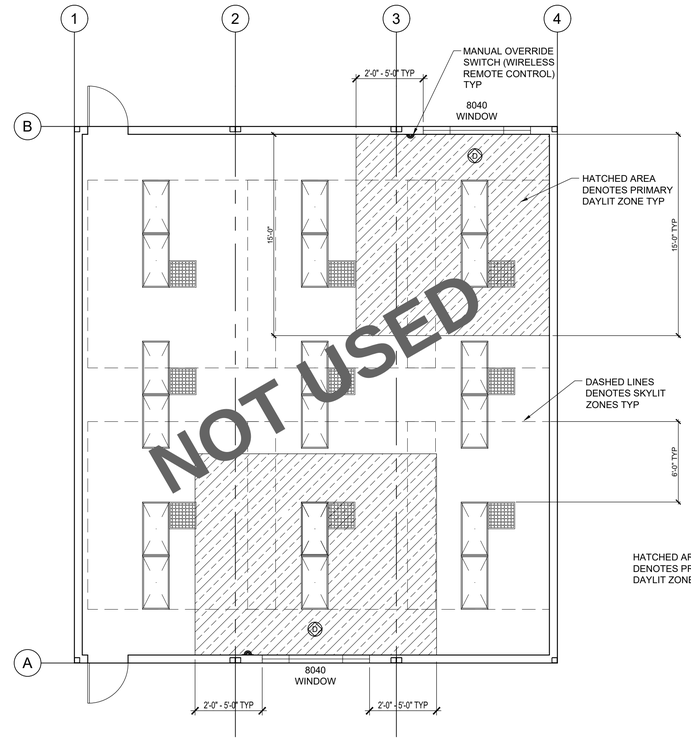


36'x40' (TYPICAL)

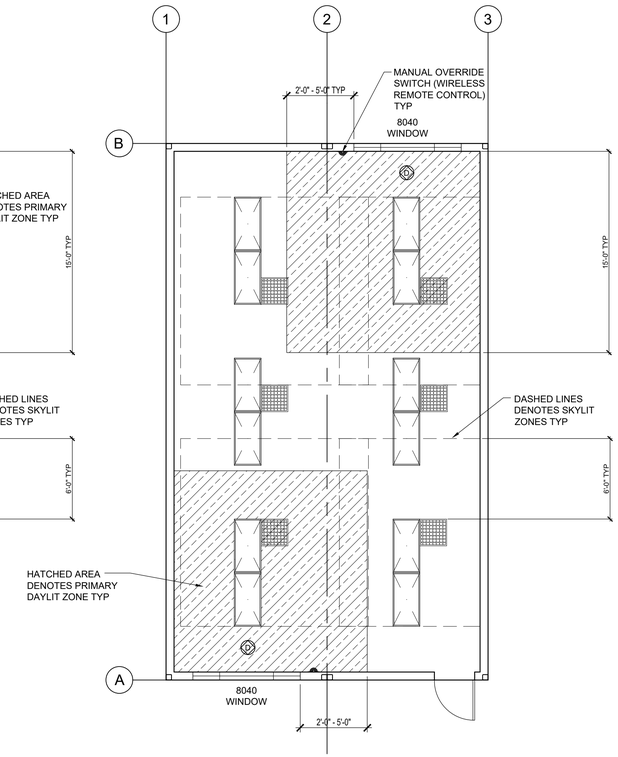


24'x40'
OPTION 'A' (RIGHT HAND) SHOWN
OPTION 'B' OPPOSITE HAND

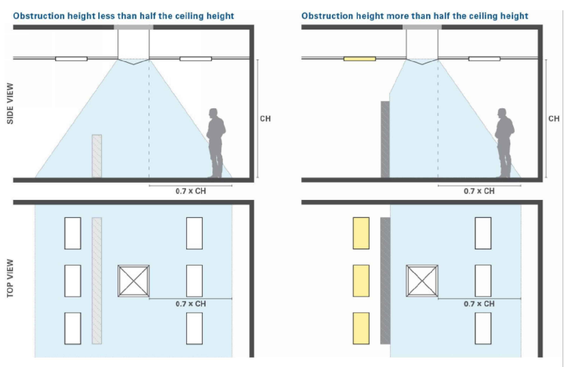


SKYLIT ZONE DIAGRAME
SCALE: NTS

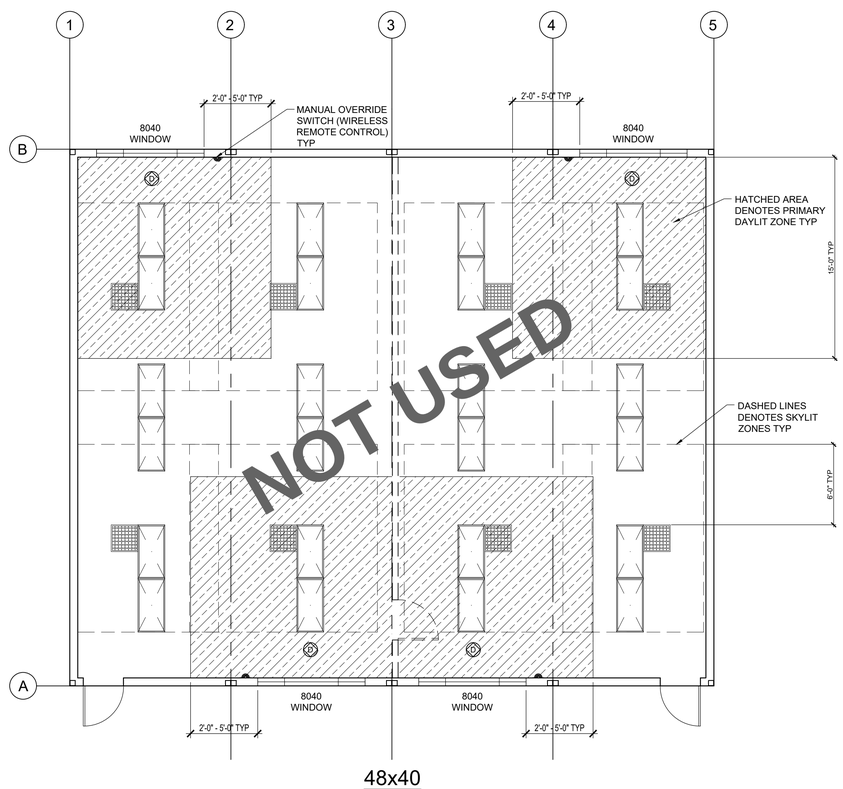


48x40

NOTES:

1. THE PURPOSE OF THESE PLANS ARE TO LOCATE THE SKYLIT & SIDELIT DAYLIT ZONES AND ITS OPERATING SWITCH PER ENERGY CODE SECTION 130.1(d) & 130.1(e)3. FOR ALL OTHER ELECTRICAL INFORMATION SEE ELECTRICAL PLANS
2. CALCULATION OF SIDELIT ZONES: (1.5 TIMES WINDOW HEAD HEIGHT FROM FINISHED FLOOR EQUALS WIDTH ON EACH SIDE OF WINDOW MINUS ANY AREA ON A PLAN BEYOND A PERMANENT OBSTRUCTION THAT IS 6 FT OR TALLER AS MEASURED FROM THE FLOOR
3. SIDELIT WINDOW (AS SHOWN, SEE ARCHITECTURAL FOR PRECISE SIZE)
4. REFER TO ELECTRICAL PLANS FOR EMERGENCY LIGHT LOCATIONS
5. SKYLIT ZONES - WHEN DETERMINING THE SKYLIT ZONE, THE SHAPE OF THE ZONE IS THE SAME AS THE GEOMETRIC SHAPE OF THE OPENING OF THE SKYLIGHT. FOR EXAMPLE, A RECTANGULAR SKYLIGHT CREATES A RECTANGULAR DAYLIGHT ZONE, AND A CIRCULAR SKYLIGHT CREATES A CIRCULAR ZONE
7. SKYLIT ZONE CALCULATION STEPS:
   1. MULTIPLY THE CEILING HEIGHT BY 0.7
   2. ADD THIS VALUE IN ALL DIRECTIONS AROUND THE SKYLIGHT (STARTING AT THE EDGE OF THE SKYLIGHT)
   3. SUBTRACT ANY AREA IN WHICH A PERMANENT OBSTRUCTION WOULD BLOCK DAYLIGHT (TALLER THAN HALF THE DISTANCE FROM THE FLOOR TO THE BOTTOM OF THE SKYLIGHT). SEE SKYLIT ZONE DIAGRAM ON THIS SHEET

SKYLIT & SIDELIT SKYLIT ZONE FLOOR PLANS
SCALE: 3/16" = 1'-0"

STATE AGENCY APPROVAL

IDENTIFICATION STAMP
DIV. OF THE STATE ARCHITECT
APP. 04-124098 INC:
REVIEWED FOR
SS ☑ FLS ☑ ACS ☑
DATE: 11/14/24

SKC COMPANY
15345 FAIRFIELD RANCH ROAD, SUITE #160, CHINO, CA 91709
OFFICE: (909) 740-3120, FAX: (909) 726-9470
WEBSITE: WWW.SKCCOMPANY.COM
MANUFACTURER #MF 1279666 DEALER # DL 1279666
GC LIC # 992118 SBE CERTIFIED

ALL DESIGNS INDICATED ON THESE PLANS/DRAWINGS ARE PROPERTY OF SKC, INC AND ARE FOR THE USE BY SKC IN THE SPECIFIED JOB ONLY. THEY SHALL NOT BE USED AND/OR DUPLICATED OR TRANSMITTED IN ANY FORM, FOR ANY PURPOSE WITHOUT THE PRIOR WRITTEN CONSENT OF SKC, INC. ANY UNAUTHORIZED USE OF THESE PLANS SHALL SUBJECT THE OWNER OF SAID PROPERTY TO LIQUIDATED DAMAGES OF $75,000.00. THESE PLANS ARE PROTECTED UNDER THE PROVISIONS OF THE 1976 COPYRIGHT ACT COPYRIGHT SKC, © ALL RIGHTS RESERVED.

DISTRICT/CUSTOMER NAME:
NEXTMOD

SCHOOL/SITE NAME:
STOCKPILE

SHEET TITLE:

SKYLIT & SIDELIT DAYLIT
ZONE FLOOR PLANS
24'-48'x40'

PRE-CHECK (PC) DOCUMENT
CODE: 2022 CBC
A SEPARATE PROJECT APPLICATION FOR
CONSTRUCTION IS REQUIRED

APPROVED
DIV. OF THE STATE ARCHITECT
APP: 04-122454 PC
REVIEWED FOR
SS ☑ FLS ☑ ACS ☑ CG ☑
DATE: 11/14/2023

PROFESSIONAL OF RECORD ON PC

ORION
Structural Engineering, Inc.
11305 RANCHO BERNARDO RD
SUITE 121
SAN DIEGO CA, 92127
PHONE (858) 679-1974
RYAN J. OLSEN
EXP. 12/31/24
STRUCTURAL
STATE OF CALIFORNIA
FIRM: Orion Structural Engineering, Inc.
ADDRESS: 11305 Rancho Bernardo Road Ste 121
CITY: San Diego, CA
PHONE: 858-679-1974

PROJECT SPECIFIC PROFESSIONAL OF RECORD

FIRM:
ADDRESS:
CITY:
PHONE:

REVISIONS
1 -
2 -
3 -
4 -
5 -

| | |
|---|---|
| PROJECT NO.: | 00-0000 |
| DRAFTER: | 00 |
| SCALE: | AS NOTED |
| DATE: | 00-00-00 |

SHEET NUMBER
E4.0DL

10/31/2023 12:17:34 PM

# SEQUENCE OF OPERATIONS FOR LIGHTING CONTROL SYSTEMS

INTERIOR SPACES:

GENERAL - ALL LIGHTING AND LIGHTING CONTROL SHALL COMPLY WITH THE LATEST CODE. THE LIGHTING AND LIGHTING CONTROLS SHOWN ON THIS PC ARE COMPANY STANDARDS. WHERE DISTRICT SPECIFICATIONS ARE IN CONFLICT WITH THE PC STANDARDS, THE DISTRICT SPECIFICATIONS SHALL GOVERN UNO. ALL LIGHTING CONTROL SHOWN ARE EQUIPPED WITH A MANUAL DIMMER (EXCEPTION - KEYED SWITCH INTERCONNECTED TO A CEILING OCCUPANCY SENSOR FOR MULTI-USE RESTROOMS WHERE APPLICABLE). ALL EMERGENCY LIGHTING SHALL BE UN-SWITCHED AND INDICATED ON PLAN WITH A HATCH

CLASSROOMS - LIGHTING CONTROL FOR CLASSROOMS SHALL BE A LIGHT SWITCH EQUIPPED WITH A MANUAL DIMMER AND INTERCONNECTED TO A CEILING OCCUPANCY SENSOR. QUANTITY OF CEILING OCCUPANCY SENSOR SHALL BE DETERMINED BY SF COVERAGE OF THE CEILING OCCUPANCY MANUFACTURE. WHERE APPLICABLE OR OPTIONAL, CLASSROOMS WITH MORE THAN ONE DOOR LEADING TO THE EXTERIOR CAN UTILIZE A 3 OR 4 WAY SWITCH WHICH MUST BE EQUIPPED WITH A MANUAL DIMMER

OFFICES AND SPACES LESS THAN 300 SF - LIGHTING CONTROL FOR OFFICES AND OR SPACES LESS THAN 300 SF SHALL USE A WALL OCCUPANCY SENSOR EQUIPPED WITH A MANUAL DIMMER. THE OCCUPANCY SENSOR SHALL BE SET TO A MAXIMUM 10 MINUTES TO TURN OFF THE LIGHTS WHEN NO MOVEMENT OR PERSON(S) ARE IN THE ROOM. UNO, DISTRICT CAN REQUEST THE SAME LIGHTING CONTROL AS THE CLASSROOM THAT UTILIZES A CEILING OCCUPANCY SENSOR

OFFICES AND SPACES GREATER THAN 300 SF - LIGHTING CONTROL FOR OFFICES AND SPACES GREATER THAN 300 SF SHALL BE A LIGHT SWITCH EQUIPPED WITH A MANUAL DIMMER AND INTERCONNECTED TO A CEILING OCCUPANCY SENSOR. QUANTITY OF CEILING OCCUPANCY SENSOR SHALL BE DETERMINED BY SF COVERAGE OF THE CEILING OCCUPANCY MANUFACTURE

HALLWAYS (WHERE APPLICABLE) - THE LIGHTING CONTROL FOR HALLWAYS SHALL BE A LIGHT SWITCH EQUIPPED WITH A MANUAL DIMMER. WHERE SPECIFIED, THE LIGHT SWITCH CAN BE A 3 OR 4 WAY LIGHTING SWITCH WHICH MUST BE EQUIPPED WITH A MANUAL DIMMER

DAYLIT ZONE SWITCH - THE LIGHTING CONTROL FOR THE DAYLIT ZONE SHALL BE AN OVERRIDE SWITCH EQUIPPED WITH A MANUAL DIMMER UNO

EXTERIOR SPACES:

GENERAL - ALL LIGHTING AND LIGHTING CONTROL SHALL COMPLY WITH THE LATEST CODE. THE LIGHTING AND LIGHTING CONTROLS SHOWN ON THIS PC ARE COMPANY STANDARDS. WHERE DISTRICT SPECIFICATIONS ARE IN CONFLICT WITH THE PC STANDARDS, THE DISTRICT SPECIFICATIONS SHALL GOVERN UNO. THE EXTERIOR LIGHT ON THIS PC IS EQUIPPED WITH A PHOTO CONTROL STANDARD (EMERGENCY BACK-UP WHERE APPLICABLE) AND NO GREATER THAN 32 WATTS

EXTERIOR DOORS - ALL EXTERIOR DOORS SHALL HAVE AN EXTERIOR LIGHT ABOVE THE DOOR HEADER STANDARD. THE EXTERIOR LIGHT IS HARD-WIRED DIRECTLY TO THE ELECTRICAL PANEL

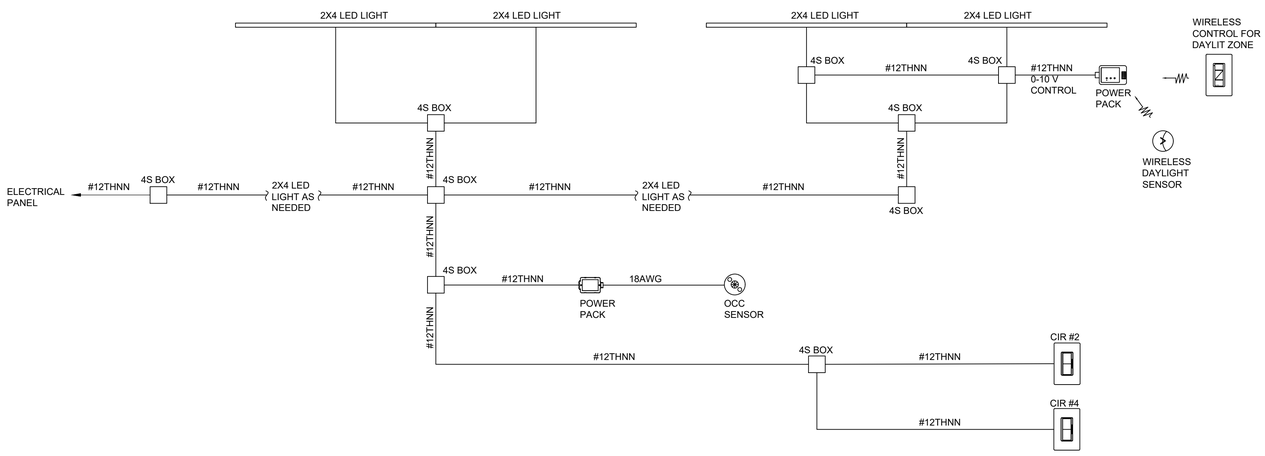


## CLASSROOM LIGHTING DIAGRAM

SCALE: NTS

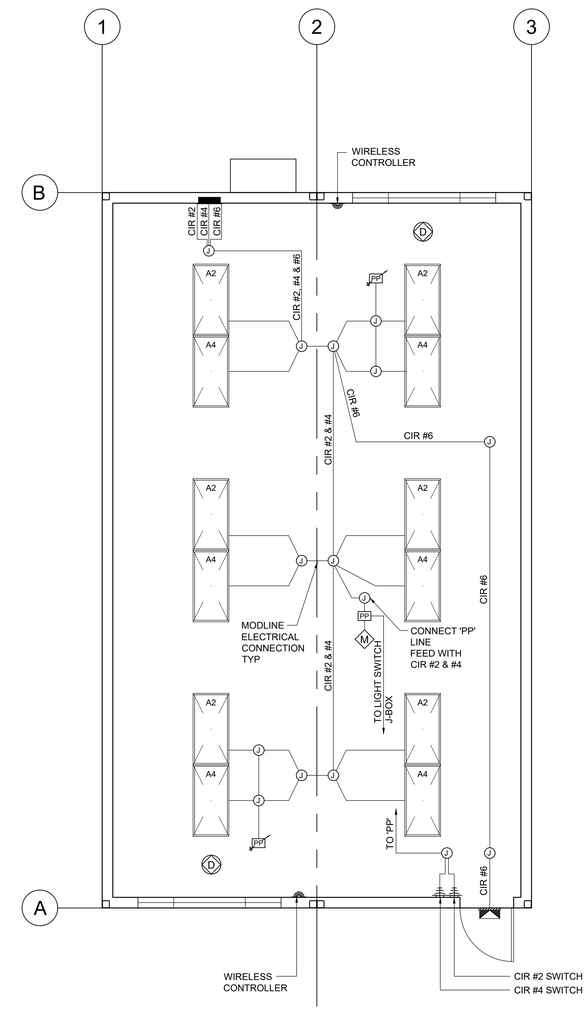


## SAMPLE 24X40 CLASSROOM INCREMENT LIGHTING SCHEMATIC

SCALE: 1/4" = 1'-0"

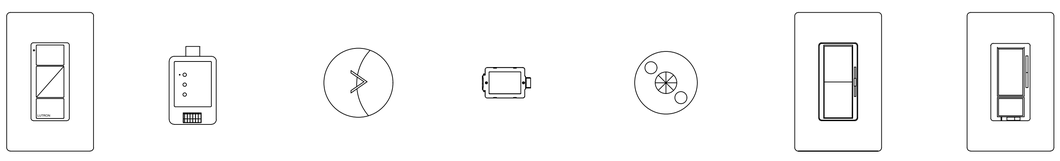

SYMBOL: WIRELESS CONTROL FOR WIRELESS DAYLIGHT SENSOR

SYMBOL: PP — POWER PACK FOR COMPATIBLE WIRELESS SENSORS/CONTROLLERS

SYMBOL: D — WIRELESS CEILING MOUNT DAYLIGHT SENSOR COMBINED, MAX 1 SENSOR PER COMPATIBLE CONTROLLER

SYMBOL: PP — POWER PACK FOR LOW VOLTAGE TRANSFORMER

SYMBOL: M — CEILING OCCUPANCY SENSOR USED WITH LIGHTING CONTROL FOR SPACES GREATER THAN 300 SF

SYMBOL: LIGHTING CONTROL FOR SPACES GREATER THAN 300 SF

SYMBOL: LIGHTING CONTROL FOR SPACES LESS THAN 300 SF INCLUDING SINGLE USE RESTROOM

## GENERAL NOTES

1. REFER TO SHEET E0.0 FOR ALL ELECTRICAL AND LOW VOLTAGE LEGEND
2. VERIFY LUMINARIES LOCATED IN DAYLIT ZONES

STATE AGENCY APPROVAL

IDENTIFICATION STAMP
DIV. OF THE STATE ARCHITECT
APP. 04-124098 INC:
REVIEWED FOR
SS ☑ FLS ☑ ACS ☑
DATE: 11/14/24


SKC COMPANY
15345 FAIRFIELD RANCH ROAD, SUITE #160, CHINO, CA 91709
OFFICE: (909) 740-3120, FAX: (909) 726-9470
WEBSITE: WWW.SKCCOMPANY.COM
MANUFACTURER #MF1279666 DEALER # DL1279666
QC LIC # 992118 SBE CERTIFIED



ALL DESIGNS INDICATED ON THESE PLANS/DRAWINGS ARE PROPERTY OF SKC, INC AND ARE FOR THE USE BY SKC IN THE SPECIFIED JOB ONLY. THEY SHALL NOT BE USED AND/OR DUPLICATED OR TRANSMITTED IN ANY FORM, FOR ANY PURPOSE WITHOUT THE PRIOR WRITTEN CONSENT OF SKC, INC. ANY UNAUTHORIZED USE OF THESE PLANS SHALL SUBJECT THE OWNER OF SAID PROPERTY TO LIQUIDATED DAMAGES OF $75,000.00. THESE PLANS ARE PROTECTED UNDER THE PROVISIONS OF THE 1976 COPYRIGHT ACT COPYRIGHT SKC, © ALL RIGHTS RESERVED.


DISTRICT/CUSTOMER NAME:
NEXTMOD

SCHOOL/SITE NAME:
STOCKPILE

SHEET TITLE:

ELECTRICAL LIGHTING CONTROL AND SEQUENCE OF OPERATION

PRE-CHECK (PC) DOCUMENT
CODE: 2022 CBC
A SEPARATE PROJECT APPLICATION FOR CONSTRUCTION IS REQUIRED

APPROVED
DIV. OF THE STATE ARCHITECT
APP: 04-122454 PC
REVIEWED FOR
SS ☑ FLS ☑ ACS ☑ CG ☑
DATE: 11/14/2023

PROFESSIONAL OF RECORD ON PC


ORION
Structural Engineering, Inc.
11305 RANCHO BERNARDO RD
SUITE 121
SAN DIEGO CA, 92127
PHONE (858) 679-1374
RYAN J. OWENS
C-61/D5
EXP. 12/31/24
STRUCTURAL
STATE OF CALIFORNIA
FIRM: Orion Structural Engineering, Inc.
ADDRESS: 11305 Rancho Bernardo Road Ste 121
CITY: San Diego, CA
PHONE: 858-679-1374


PROJECT SPECIFIC PROFESSIONAL OF RECORD

FIRM:
ADDRESS:
CITY:
PHONE:

REVISIONS

1 -
2 -
3 -
4 -
5 -

| | |
|---|---|
| PROJECT NO.: | 00-0000 |
| DRAFTER: | 00 |
| SCALE: | AS NOTED |
| DATE: | 00-00-00 |

SHEET NUMBER

E6.0

10/31/2023 12:18:26 PM

STATE OF CALIFORNIA
## Electrical Power Distribution
CALIFORNIA ENERGY COMMISSION

| CERTIFICATE OF COMPLIANCE | | NRCC-ELC-E |
|---|---|---|
| *This document is used to demonstrate compliance with mandatory requirements in 130.5, for electrical systems in newly constructed nonresidential and hotel/motel occupancies and 160.6 and 160.9 for electrical systems in newly constructed multifamily occupancies. Additions and alterations to electrical service systems in nonresidential and hotel/motel occupancies will also use this document to demonstrate compliance per 141.0(a) or 141.0(b)2F for alterations. For multifamily addition or alterations compliance will be documented per 180.1(a) or 180.2 (b)4Bvii* | | |
| **Project Name:** 24'x40' (PC #04-122454) Wall HVAC | **Report Page:** | **(Page 1 of 4)** |
| **Project Address:** Classroom Buildings | **Date Prepared:** | 10/30/2023 |

### A. GENERAL INFORMATION

| | | | | | |
|---|---|---|---|---|---|
| 01 | Project Location (city) | Blue Canyon | 02 | Climate Zone | 16 |
| | | | 03 | Occupancy Types Within Project: | Classroom |

### B. PROJECT SCOPE

*This table includes electrical systems that are within the scope of the permit application.*

| 01 | 02 | 03 | 04 | 05 | 06 | 07 |
|---|---|---|---|---|---|---|
| Electrical Service Designation/ Description | Scope of Work[1] | Rating[2] (kVA) | Utility Provided Metering System Exception to 130.5(a)/ 160.6(a)[3] | System subject to CA Elec Code Article 517 Exception to 130.5(a)and (b) | Demand Response Controls | Provides power to dwelling units/common living areas only in multifamily occupancy |
| Main | New electrical service equipment and meter | 0 | ☐ | ☐ | Where required, demand response controls must be specified which are capable of receiving and automatically responding to at least one standards based messaging protocol which enables demand response after receiving a demand response signal. Sections 120.2/ 160.3, 130.1/ 160.5, and 130.3/ 160.5, and mechanical, indoor lighting, and sign lighting Certificate of Compliance documents will indicate when demand response controls are required. | ☐ |

[1] *FOOTNOTES: Adding only new feeders and branch circuits triggers Voltage Drop 130.5(c)/160.6(c), no other requirements from 130.5/160.6 are required.*
[2] *If common use areas in a multifamily are submetered, rating is for submeter size serving common use areas.*
[3] *Applicable if the utility company is providing a metering system that indicates instantaneous kW demand and kWh for a utility-defined period.*



STATE OF CALIFORNIA
## Electrical Power Distribution
CALIFORNIA ENERGY COMMISSION

| CERTIFICATE OF COMPLIANCE | | NRCC-ELC-E |
|---|---|---|
| **Project Name:** 24'x40' (PC #04-122454) Wall HVAC | **Report Page:** | **(Page 2 of 4)** |
| | **Date Prepared:** | 10/30/2023 |

### C. COMPLIANCE RESULTS

*Results in this table are automatically calculated from data input and calculations in Tables F through J. Note: If any cell on this table says "COMPLIES with Exceptional Conditions" refer to Table D. Exceptional Conditions for guidance or see applicable Table referenced below.*

| 01 | | 02 | | 03 | | 04 | 05 | 06 |
|---|---|---|---|---|---|---|---|---|
| Service Electrical Metering 130.5(a)/ 160.6(a) (See Table F) | AND | Separation for Monitoring 130.5(b)/ 160.6(b) (See Table G) | AND | Voltage Drop 130.5(c)/ 160.6(c) (See Table H) | AND | Controlled Receptacles 130.5(d)/ 160.6(d) (See Table I) | Electric Ready 160.9 (See Table J) | **Compliance Results** |
| Yes | AND | | AND | Yes | AND | | | COMPLIES |

### D. EXCEPTIONAL CONDITIONS

*This table is auto-filled with uneditable comments because of selections made or data entered in tables throughout the form.*

### E. ADDITIONAL REMARKS

*This table includes remarks made by the permit applicant to the Authority Having Jurisdiction.*

### F. SERVICE ELECTRICAL METERING

*This table includes new or replacement electrical service systems OR equipment to demonstrate compliance with 130.5(a) / 160.6(a). For multifamily occupancies, submetered systems that provide power to common use areas must meet the following metering requirements. Submetered systems providing power to dwelling units do not.*

| 01 | 02 | 03 | | | | 04 | 05 | |
|---|---|---|---|---|---|---|---|---|
| Electrical Service Designation/ Description | Rating[1] (kVA) | Required Metering Capabilities per Table 130.5-A | | | | Location of Requirements in Construction Documents | Field Inspector | |
| | | Instantaneous Demand (kW) | Historical Peak Demand (kW) | Tracking kWh for user-defined period | kWh per rate period | | Pass | Fail |
| Main | 0 | ☒ | ☐ | ☒ | ☐ | | ☐ | ☐ |

[1] *FOOTNOTES: If common use areas in a multifamily are submetered, rating is for submeter size serving common use areas.*

### H. VOLTAGE DROP

*This table includes entirely new or complete replacement electrical power distribution systems, or alterations that add, modify or replace both feeders and branch circuits to demonstrate compliance with 130.5(c)/ 160.6(c). For alterations, only the altered circuits must demonstrate compliance per 141.0(b)2Piii/ 180.2(b)4Bviic.*



STATE OF CALIFORNIA
## Electrical Power Distribution
CALIFORNIA ENERGY COMMISSION

| CERTIFICATE OF COMPLIANCE | | NRCC-ELC-E |
|---|---|---|
| **Project Name:** 24'x40' (PC #04-122454) Wall HVAC | **Report Page:** | **(Page 3 of 4)** |
| | **Date Prepared:** | 10/30/2023 |

### H. VOLTAGE DROP

| 01 | 02 | | | 03 | 04 | 05 | |
|---|---|---|---|---|---|---|---|
| Electrical Service Designation/Description | Combined Voltage Drop on Installed Feeder/Branch Circuit Conductors Compliance Method | | | Location of Voltage Drop Calculations[1] | Sheet Number for Voltage Drop Calculations in Construction Documents | Field Inspector | |
| | | | | | | Pass | Fail |
| Main | ☒ | Voltage drop less than 5% | ☐ | Permitted by CA Elec Code (Exception to 130.5(c))* | Attached | E-Sheets | ☐ | ☐ |

** NOTES: If "Permitted by CA Elec Code *" is selected under Compliance Method above, please indicate where the exception applies in the space provided below.*

[1] *FOOTNOTES: Voltage drop calculations may be attached to the permit application outside the construction documents if allowed by the Authority Having Jurisdiction. Select "attached" if applicable. If calculations will be the responsibility of the installing contractor, select "Contractor Responsible".*

### J. ELECTRIC READY BUILDINGS

*This section does not apply to this project.*

### K. DECLARATION OF REQUIRED CERTIFICATES OF INSTALLATION

*Selections have been made based on information provided in this document. If any selection have been changed by permit applicant, an explanation should be included in Table E. Additional Remarks. These documents must be provided to the building inspector during construction and can be found online*

| Form/Title |
|---|
| NRCI-ELC-E - Must be submitted for all buildings |



STATE OF CALIFORNIA
## Electrical Power Distribution
CALIFORNIA ENERGY COMMISSION

| CERTIFICATE OF COMPLIANCE | | NRCC-ELC-E |
|---|---|---|
| **Project Name:** 24'x40' (PC #04-122454) Wall HVAC | **Report Page:** | **(Page 4 of 4)** |
| **Project Address:** Classroom Buildings | **Date Prepared:** | 10/30/2023 |

### DOCUMENTATION AUTHOR'S DECLARATION STATEMENT

**I certify that this Certificate of Compliance documentation is accurate a/nd complete.**

| | |
|---|---|
| Documentation Author Name: Jeffrey C. Chan-Lugay | Documentation Author Signature: Jeffrey C. Chan-Lugay — CBESC-Res Certified Energy Analyst, CEA Candidate, CBSP Candidate, LEED AP BD+C, CGBP, CGDP, CGSP, CGMP, WELL AP, LFA Candidate |
| Company: SKC Company | Signature Date: 10/30/2023 |
| Address: 15345 Fairfield Ranch Road, Suite #160 | CEA/ HERS Certification Identification (if applicable): 992118 |
| City/State/Zip: Chino Hills CA 91709 | Phone: (909) 740-3120 |

### RESPONSIBLE PERSON'S DECLARATION STATEMENT

I certify the following under penalty of perjury, under the laws of the State of California:
1. The information provided on this Certificate of Compliance is true and correct.
1. I am eligible under Division 3 of the Business and Professions Code to accept responsibility for the building design or system design identified on this Certificate of Compliance (responsible designer)
3. The energy features and performance specifications, materials, components, and manufactured devices for the building design or system design identified on this Certificate of Compliance conform to the requirements of Title 24, Part 1 and Part 6 of the California Code of Regulations.
4. The building design features or system design features identified on this Certificate of Compliance are consistent with the information provided on other applicable compliance documents, worksheets, calculations, plans and specifications submitted to the enforcement agency for approval with this building permit application.
5. I will ensure that a completed signed copy of this Certificate of Compliance shall be made available with the building permit(s) issued for the building, and made available to the enforcement agency for all applicable inspections. I understand that a completed signed copy of this Certificate of Compliance is required to be included with the documentation the builder provides to the building owner at occupancy.

| | |
|---|---|
| Responsible Designer Name: Sean Khan | Responsible Designer Signature: Sean Khan — CEA/HERS Certified Energy Analyst, CBSP Candidate, LEED AP BD+C, WELL AP, LFA Candidate, CGBP, CGDP, CGSP, CGMP, CGBD, CGSD, CGMD, CGIA, CGIS, CGIM, CGIEA, CGIEM, CGIEP, CGIEE, CGIEC, CGIEI, CGIEO, CGIEN, CGIEW, CGIEX, CGIEY, CGIEZ, CGIEU, CGIEV, CGIEB, CGIEG, CGIEH, CGIEJ, CGIEK, CGIEL, CGIEM, CGIEP, CGIEQ, CGIER, CGIES, CGIET, CGIEU, CGIEV, CGIEW, CGIEX, CGIEY, CGIEZ, CGIEA, CGIEB, CGIEC, CGIED, CGIEE, CGIEF, CGIEG, CGIEH, CGIEI, CGIEJ, CGIEK, CGIEL, CGIEM, CGIEN, CGIEO, CGIEP, CGIEQ, CGIER, CGIES, CGIET, CGIEU, CGIEV, CGIEW, CGIEX, CGIEY, CGIEZ |
| Company: SKC Company | Date Signed: 2023-10-30 |
| Address: 15345 Fairfield Ranch Road, Suite #160 | License: 992118 |
| City/State/Zip: Chino Hills CA 91709 | Phone: 909-740-3120 |



STATE OF CALIFORNIA
## Indoor Lighting
CALIFORNIA ENERGY COMMISSION

| CERTIFICATE OF COMPLIANCE | | NRCC-LTI-E |
|---|---|---|
| *This document is used to demonstrate compliance with requirements in 110.9, 110.12(c), 130.0, 130.1, 140.6 and 141.0(b)2 for indoor lighting scopes using the prescriptive path for nonresidential and hotel/motel occupancies. It is also used to document compliance with requirements in 160.5, 170.2(e) and 180.2(b)4 for indoor lighting scopes using the prescriptive path for multifamily occupancies. Multifamily includes dormitory and senior living facilities.* | | |
| **Project Name:** 24'x40' (PC #04-122454) Wall HVAC | **Report Page:** | **(Page 1 of 8)** |
| **Project Address:** Classroom Buildings | **Date Prepared:** | 10/30/2023 |

### A. GENERAL INFORMATION

| | | | | | |
|---|---|---|---|---|---|
| 01 | Project Location (city) | Blue Canyon | 04 | Total Conditioned Floor Area (ft$^2$) | 960 |
| 02 | Climate Zone | 16 | 05 | Total Unconditioned Floor Area (ft$^2$) | 0 |
| 03 | Occupancy Types Within Project (select all that apply): | | 06 | # of Stories (Habitable Above Grade) | 1 |

◆ Classroom

### B. PROJECT SCOPE

*This table includes any lighting systems that are within the scope of the permit application and are demonstrating compliance using the prescriptive path outlined in 140.6 / 170.2(e) or 141.0(b)2 / 180.2(b)4 for alterations.*

| Scope of Work | Conditioned Spaces | | Unconditioned Spaces | |
|---|---|---|---|---|
| 01 | 02 | 03 | 04 | 05 |
| My Project Consists of (check all that apply): | Calculation Method | Area (ft$^2$) | Calculation Method | Area (ft$^2$) |
| ☒ New Lighting System | Area Category Method | 960 | Area Category Method | 0 |
| ☐ New Lighting System - Parking Garage | | | | |
| **Total Area of Work (ft$^2$)** | 960 | | 0 | |



STATE OF CALIFORNIA
## Indoor Lighting
CALIFORNIA ENERGY COMMISSION

| CERTIFICATE OF COMPLIANCE | | NRCC-LTI-E |
|---|---|---|
| **Project Name:** 24'x40' (PC #04-122454) Wall HVAC | **Report Page:** | **(Page 2 of 8)** |
| | **Date Prepared:** | 10/30/2023 |

### C. COMPLIANCE RESULTS

*If any cell on this table says "DOES NOT COMPLY" or "COMPLIES with Exceptional Conditions" refer to Table D. for guidance.*

| *Lighting in conditioned and unconditioned spaces must not be combined for compliance per 140.6(b)1 / 170.2(e)* | Allowed Lighting Power per 140.6(b) / 170.2(e) (Watts) | | | | | | Adjusted Lighting Power per 140.6(a) / 170.2(e) (Watts) | | | | Compliance Results |
|---|---|---|---|---|---|---|---|---|---|---|---|
| | 01 | 02 | 03 | 04 | | 05 | 06 | 07 | | 08 | 09 |
| | Complete Building 140.6(c)1 | Area Category 140.6(c)2 / 170.2(e)4 | Area Category Additional 140.6(c)2G / 170.2(e)4Av (+) | Tailored 140.6(c)3 / 170.2(e)4B (+) | | **Total Allowed** (Watts) | Total Designed (Watts) | Adjustments: PAF Lighting Control Credits 140.6(a)2 / 170.2(e)1B (-) | | **Total Adjusted** (Watts) *Includes Adjustments | **05 must be >= 08 140.6 / 170.2(e)** |
| | (See Table I) | (See Table I) | (See Table J) | (See Table K) | | | (See Table F) | (See Table P) | | | |
| **Conditioned** | | 576 | 0 | | = | 576 | 600 | 60 | = | 540 | COMPLIES |
| **Unconditioned** | | | | | = | | | | = | | |
| **Controls Compliance (See Table H for Details)** | | | | | | | | | | | COMPLIES |
| **Rated Power Reduction Compliance (See Table Q for Details)** | | | | | | | | | | | |

### D. EXCEPTIONAL CONDITIONS

*This table is auto-filled with uneditable comments because of selections made or data entered in tables throughout the form.*

### E. ADDITIONAL REMARKS

*This table includes remarks made by the permit applicant to the Authority Having Jurisdiction.*



STATE OF CALIFORNIA
## Indoor Lighting
CALIFORNIA ENERGY COMMISSION

| CERTIFICATE OF COMPLIANCE | | NRCC-LTI-E |
|---|---|---|
| **Project Name:** 24'x40' (PC #04-122454) Wall HVAC | **Report Page:** | **(Page 3 of 8)** |
| | **Date Prepared:** | 10/30/2023 |

### F. INDOOR LIGHTING FIXTURE SCHEDULE

*This table includes all planned permanent and portable lighting other than dwelling unit/ hotel/ motel room lighting. Multifamily dwelling unit and hotel/motel room lighting is documented in Table T. If using Table T to document lighting in multifamily common use areas providing shared provisions for living, eating, cooking or sanitation, those luminaires are not included here.*

**Designed Wattage: Conditioned Spaces**

| 01 | 02 | 03 | 04 | 05 | 06 | 07 | 08 | 09 | 10 | |
|---|---|---|---|---|---|---|---|---|---|---|
| Name or Item Tag | Complete Luminaire Description | Modular (Track) Fixture | Small Aperture & Color Change[1] | Watts per luminaire[2] | How is Wattage determined | Total Number of Luminaires | Excluded per 140.6(a)3 / 170.2(e)2C | Design Watts | Field Inspector | |
| | | | | | | | | | Pass | Fail |
| Int Lts | 2x4 LED | No | NA | 50 | Mfr. Spec | 12 | No | 600 | ☐ | ☐ |
| **Total Designed Watts: CONDITIONED SPACES** | | | | | | | | 600 | | |

[1] *FOOTNOTE: Design Watts for small aperture and color changing luminaires which qualify per 140.6(a)4B / 170.2(e)2D is adjusted to be 75% /80% of their rated wattage. Table F automatically makes this adjustment, the permit applicant should enter full rated wattage in column 05.*

[2] *Authority Having Jurisdiction may ask for Luminaire cut sheets to confirm wattage used for compliance per 130.0(c) / 160.5(b). Wattage used must be the maximum rated for the luminaire, not the lamp.*

### G. MODULAR LIGHTING SYSTEMS

*This section does not apply to this project.*

### H. INDOOR LIGHTING CONTROLS (Not including PAFs)

*This table includes lighting controls for conditioned and unconditioned spaces.*

**Building Level Controls**

| 01 | 02 | 03 | |
|---|---|---|---|
| Mandatory Demand Response 110.12(c) | Shut-off controls 130.1(c) / 160.5(b)4C | Field Inspector | |
| | | Pass | Fail |
| Required >= 4,000W subject to multilevel | Whole Building Auto Time Switch | ☐ | ☐ |



STATE OF CALIFORNIA
## Indoor Lighting
CALIFORNIA ENERGY COMMISSION

| CERTIFICATE OF COMPLIANCE | | NRCC-LTI-E |
|---|---|---|
| **Project Name:** 24'x40' (PC #04-122454) Wall HVAC | **Report Page:** | **(Page 4 of 8)** |
| | **Date Prepared:** | 10/30/2023 |

### H. INDOOR LIGHTING CONTROLS (Not including PAFs)

**Area Level Controls**

| 04 | 05 | 06 | 07 | 08 | 09 | 10 | 11 | 12 | |
|---|---|---|---|---|---|---|---|---|---|
| Area Description | Complete Building or Area Category Primary Function Area | Manual Area Controls 130.1(a) / 160.5(b)4A | Multi-Level Controls 130.1(b) / 160.5(b)4B | Shut-Off Controls 130.1(c) // 160.5(b)4C | Primary/Sky lit Daylighting 130.1(d) / 160.5(b)4D | Secondary Daylighting 130.1(d) / 160.5(b)4D | Interlocked Systems 140.6(a)1/ 170.2(e)2A | Field Inspector | |
| | | | | | | | | Pass | Fail |
| Whole Building | All Other Space Types | Readily Accessible | Dimmer | See Building Level | Included | Included | No | ☐ | ☐ |
| | | | | | 13 | | | | |
| | | | | | Plan Sheet Showing Daylit Zones: | | | | |

### I. LIGHTING POWER ALLOWANCE: COMPLETE BUILDING OR AREA CATEGORY METHODS

*Each area complying using the Complete Building or Area Category Methods per 140.6(b) are included in this table. Column 06 indicates if additional lighting power allowances per 140.6(c) or adjustments per 140.6(a) are being used .*

**Conditioned Spaces**

| 01 | 02 | 03 | 04 | 05 | 06 | |
|---|---|---|---|---|---|---|
| Area Description | Complete Building or Area Category Primary Function Area | Allowed Density (W/ft$^2$) | Area (ft$^2$) | Allowed Wattage (Watts) | Additional Allowance / Adjustment | |
| | | | | | Area Category | PAF |
| All Zones | Classroom, Lecture, or Training Vocational | 0.6 | 960 | 576 | No | Yes |
| | | **TOTALS:** | 960 | 576 | See Tables J, or P for detail | |

### J. ADDITIONAL ALLOWANCE: AREA CATEGORY METHOD QUALIFYING LIGHTING SYSTEM

*This section does not apply to this project.*



STATE OF CALIFORNIA
## Indoor Lighting
CALIFORNIA ENERGY COMMISSION

| CERTIFICATE OF COMPLIANCE | | NRCC-LTI-E |
|---|---|---|
| **Project Name:** 24'x40' (PC #04-122454) Wall HVAC | **Report Page:** | **(Page 5 of 8)** |
| | **Date Prepared:** | 10/30/2023 |

### K. TAILORED METHOD GENERAL LIGHTING POWER ALLOWANCE

*This section does not apply to this project.*

### L. ADDITIONAL LIGHTING ALLOWANCE: TAILORED WALL DISPLAY

*This section does not apply to this project.*

### M. ADDITIONAL LIGHTING ALLOWANCE: TAILORED FLOOR AND TASK LIGHTING

*This section does not apply to this project.*

### N. ADDITIONAL LIGHTING ALLOWANCE: TAILORED DECORATIVE /SPECIAL EFFECTS

*This section does not apply to this project.*

### O. ADDITIONAL LIGHTING ALLOWANCE: TAILORED VERY VALUABLE MERCHANDISE

*This section does not apply to this project.*



STATE AGENCY APPROVAL

IDENTIFICATION STAMP
DIV. OF THE STATE ARCHITECT
APP. 04-124098 INC:
REVIEWED FOR
SS ☑ FLS ☑ ACS ☑
DATE: 11/14/24


SKC COMPANY
15345 FAIRFIELD RANCH ROAD, SUITE #160, CHINO, CA 91709
OFFICE: (909) 740-3120, FAX: (909) 726-9470
WEBSITE: WWW.SKCCOMPANY.COM
MANUFACTURER #MF 1279666 DEALER # DL 1279666
GC LIC # 992118 SBE CERTIFIED



ALL DESIGNS INDICATED ON THESE PLANS/DRAWINGS ARE PROPERTY OF SKC, INC AND ARE FOR THE USE BY SKC IN THE SPECIFIED JOB ONLY. THEY SHALL NOT BE USED AND/OR DUPLICATED OR TRANSMITTED IN ANY FORM, FOR ANY PURPOSE WITHOUT THE PRIOR WRITTEN CONSENT OF SKC, INC. ANY UNAUTHORIZED USE OF THESE PLANS SHALL SUBJECT THE OWNER OF SAID PROPERTY TO LIQUIDATED DAMAGES OF $75,000.00. THESE PLANS ARE PROTECTED UNDER THE PROVISIONS OF THE 1976 COPYRIGHT ACT COPYRIGHT SKC, © ALL RIGHTS RESERVED.


DISTRICT/CUSTOMER NAME:
NEXTMOD

SCHOOL/SITE NAME:
STOCKPILE

SHEET TITLE:
PC TITLE 24 REPORT
WORST CASE SCENARIO &
CEC FORMS

PRE-CHECK (PC) DOCUMENT
CODE: 2022 CBC
A SEPARATE PROJECT APPLICATION FOR CONSTRUCTION IS REQUIRED

APPROVED
DIV. OF THE STATE ARCHITECT
APP: 04-122454 PC
REVIEWED FOR
SS ☑ FLS ☑ ACS ☑ CG ☑
DATE: 11/14/2023

PROFESSIONAL OF RECORD ON PC


ORION
Structural Engineering, Inc.
11305 RANCHO BERNARDO RD
SUITE 121
SAN DIEGO CA, 92127
PHONE (858) 679-1974
RYAN J. OLSEN — STATE OF CALIFORNIA — STRUCTURAL — EXP. 12/31/24
FIRM: Orion Structural Engineering, Inc.
ADDRESS: 11305 Rancho Bernardo Road Ste 121
CITY: San Diego, CA
PHONE: 858-679-1974


PROJECT SPECIFIC PROFESSIONAL OF RECORD

FIRM:
ADDRESS:
CITY:
PHONE:

REVISIONS
1 -
2 -
3 -
4 -
5 -

| | |
|---|---|
| PROJECT NO.: | 00-0000 |
| DRAFTER: | 00 |
| SCALE: | AS NOTED |
| DATE: | 00-00-00 |

SHEET NUMBER
E7.0

10/31/2023 12:18:55 PM

STATE OF CALIFORNIA
## Indoor Lighting
CALIFORNIA ENERGY COMMISSION

| CERTIFICATE OF COMPLIANCE | | NRCC-LTI-E |
|---|---|---|
| Project Name: 24'x40' (PC #04-122454) Wall HVAC | Report Page: | (Page 6 of 8) |
| | Date Prepared: | 10/30/2023 |

### P. POWER ADJUSTMENT: LIGHTING CONTROL CREDIT (POWER ADJUSTMENT FACTOR (PAF))

*This table includes all areas indicated in Table I or Table K as using a PAF credit described in 140.6(a)2 / 170.2(e)2B.*

**Conditioned Spaces**

| 01 | 02 | | | | | | | | | 03 | 04 | 05 | 06 | 07 |
|---|---|---|---|---|---|---|---|---|---|---|---|---|---|---|
| Area Description | PAF per 140.6(a)2 / 170.2(e)2B[1] (*Can be used in conjunction with other PAF'S) | | | | | | | | | Luminaires Controlled for PAF Credit | | | | Additional Control Credit Allowance (Watts) |
| | 1 | 2A | 2B | 3A* | 3B* | 4* | 5* | 6* | 7* | Luminaire Name or Item Tag | Luminaire Design Watts | Number of Luminaires | Lighting Controlled (Watts) | |
| | | | | Pick up to one | | Pick up to one | | Pick up to one[2] | Pick up to one[2] | | | | | |
| All Zones | ☒ | ☐ | ☐ | ☐ | ☐ | ☐ | ☐ | ☐ | ☐ | Int Lts | 50 | 12 | 600 | 60.0 |
| 08 | | | | | | | | | | 09 | | | | |
| ☐ | All spaces applying PAF 5, 6 or 7 include a daylight design meeting requirements in 140.3(d). See Table S. | | | | | | | | | **Total Power Adjustment (Watts) CONDITIONED SPACES:** | | | | 0.06 |

[1] *FOOTNOTES: PAFs outlined in Table 140.6-A /170.2-L include 1) Daylight continuous dimming plus OFF; 2A) Occupant sensors in offices with one sensor per <= 125 ft²; 2B) Occupant sensors in offices with one sensor per 126 - 250 ft²; 3A) Institutional tuning, non-daylit areas and 3B) Institutional tuning, daylit areas; 4) Demand response; 5) Clerestory fenestration; 6) Horizontal slats; 7) Light shelves.*

[2] *Luminaires that qualify for PAF 5, 6, or 7 can be used in conjunction with PAF 1.*

### Q. RATED POWER REDUCTION COMPLIANCE FOR ONE-FOR-ONE ALTERATIONS

*This section does not apply to this project.*

### R. 80% LIGHTING POWER FOR ALL ALTERATIONS - CONTROLS EXCEPTIONS

*This section does not apply to this project.*



STATE OF CALIFORNIA
## Indoor Lighting
CALIFORNIA ENERGY COMMISSION

| CERTIFICATE OF COMPLIANCE | | NRCC-LTI-E |
|---|---|---|
| Project Name: 24'x40' (PC #04-122454) Wall HVAC | Report Page: | (Page 7 of 8) |
| | Date Prepared: | 10/30/2023 |

### S. DAYLIGHT DESIGN POWER ADJUSTMENT FACTOR (PAF)

*This table documents clerestories, horizontal slats or light shelves meet the requirements in 140.3(d) / 170.2(e)2B if a Power Adjustment Factor was claimed on Table P. These features must be documented on the architectural plans or where appropriate within the construction documents. This PAF also must be verified in the field with an acceptance test per Table U.*

| 01 | Compliance Strategy | |
|---|---|---|

### T. DWELLING UNIT LIGHTING

*This section does not apply to this project.*

### U. DECLARATION OF REQUIRED CERTIFICATES OF INSTALLATION

*Selections have been made based on information provided in this document. If any selections have been changed by permit applicant, an explanation should be included in Table E. Additional Remarks. These documents must be provided to the building inspector during construction and can be found online*

| Form/Title |
|---|
| NRCI-LTI-E - Must be submitted for all buildings |

### V. DECLARATION OF REQUIRED CERTIFICATES OF ACCEPTANCE

*Selections have been made based on information provided in this document. If any selections have been changed by the permit applicant, an explanation should be included in Table E. Additional Remarks. These documents must be provided to the building inspector during construction and any with "-A" in the form name must be completed through an Acceptance Test Technician Certification Provider (ATTCP). For more information visit: http://www.energy.ca.gov/title24/attcp/providers.html*

| Form/Title | Systems/Spaces To Be Field Verified |
|---|---|
| NRCA-LTI-02-A - Must be submitted for occupancy sensors and automatic time switch controls. | Whole Building Time Switch; |
| NRCA-LTI-03-A - Must be submitted for automatic daylight controls. | Whole Building; |
| NRCA-LTI-04-A - Must be submitted for demand responsive lighting controls. | Whole Building Demand Response; |



STATE OF CALIFORNIA
## Indoor Lighting
CALIFORNIA ENERGY COMMISSION

| CERTIFICATE OF COMPLIANCE | | NRCC-LTI-E |
|---|---|---|
| Project Name: 24'x40' (PC #04-122454) Wall HVAC | Report Page: | (Page 8 of 8) |
| Project Address: Classroom Buildings | Date Prepared: | 10/30/2023 |

### DOCUMENTATION AUTHOR'S DECLARATION STATEMENT

**I certify that this Certificate of Compliance documentation is accurate and complete.**

| | |
|---|---|
| Documentation Author Name: Jeffrey C. Chan-Lugay | Documentation Author Signature: Jeffrey C. Chan-Lugay |
| Company: SKC Company | Signature Date: 2023-10-30 |
| Address: 15345 Fairfield Ranch Road, Suite #160 | CEA/ HERS Certification Identification (if applicable): 992118 |
| City/State/Zip: Chino Hills CA 91709 | Phone: (909) 740-3120 |

### RESPONSIBLE PERSON'S DECLARATION STATEMENT

I certify the following under penalty of perjury, under the laws of the State of California:

1. The information provided on this Certificate of Compliance is true and correct.
2. I am eligible under Division 3 of the Business and Professions Code to accept responsibility for the building design or system design identified on this Certificate of Compliance (responsible designer)
3. The energy features and performance specifications, materials, components, and manufactured devices for the building design or system design identified on this Certificate of Compliance conform to the requirements of Title 24, Part 1 and Part 6 of the California Code of Regulations.
4. The building design features or system design features identified on this Certificate of Compliance are consistent with the information provided on other applicable compliance documents, worksheets, calculations, plans and specifications submitted to the enforcement agency for approval with this building permit application.
5. I will ensure that a completed signed copy of this Certificate of Compliance shall be made available with the building permit(s) issued for the building, and made available to the enforcement agency for all applicable inspections. I understand that a completed signed copy of this Certificate of Compliance is required to be included with the documentation the builder provides to the building owner at occupancy.

| | |
|---|---|
| Responsible Designer Name: Sean Khan | Responsible Designer Signature: Sean Khan |
| Company: SKC Company | Date Signed: 2023-10-30 |
| Address: 15345 Fairfield Ranch Road, Suite #160 | License: 992118 |
| City/State/Zip: Chino Hills CA 91709 | Phone: 909-740-3120 |



STATE OF CALIFORNIA
## Outdoor Lighting
CALIFORNIA ENERGY COMMISSION

| CERTIFICATE OF COMPLIANCE | | NRCC-LTO-E |
|---|---|---|
| *This document is used to demonstrate compliance with requirements in 110.9, 130.0, 130.2, 140.7, and 141.0(b)2L for outdoor lighting scopes using the prescriptive path for nonresidential and hotel/motel occupancies. It is also used to document compliance with requirements in 160.5, 170.2(e)6, 180.1(a) and 180.2(b)4Bv for outdoor lighting scopes using the prescriptive path for multifamily and mixed-use occupancies. Multifamily includes dormitory and senior living facilities.* | | |
| Project Name: 24'x40' (PC #04-122454) Wall HVAC | Report Page: | (Page 1 of 7) |
| Project Address: Classroom Buildings | Date Prepared: | 10/30/2023 |

### A. GENERAL INFORMATION

| | | | | | |
|---|---|---|---|---|---|
| 01 | Project Location (city) | Blue Canyon | 04 | Total Illuminated Hardscape Area (ft²) | 0 |
| 02 | Climate Zone | 16 | | | |

03 Outdoor Lighting Zone per Title 24 Part 1 10.114 or as designated by Authority Having Jurisdiction (AHJ):

☐ LZ-0: Very Low - Undeveloped Parkland ☐ LZ-2: Moderate - Urban Clusters ☐ LZ-4: High - Must be reviewed by CA Energy Commission for Approval
☐ LZ-1: Low - Rural Areas ☒ LZ-3: Moderately High - Urban Areas

05 Occupancy Types within Project

● Classroom

### B. PROJECT SCOPE

*This table includes outdoor lighting systems that are within the scope of the permit application and are demonstrating compliance using the prescriptive path outlined in 140.7 / 170.2(e)6 or 141.0(b)2L / 180.2(b)4Bv for alterations.*

**My Project Consists of:**

| 01 | 02 | |
|---|---|---|
| ☒ New Lighting System | Must Comply with Allowances from 140.7 / 170.2(e)6 | |
| ☐ Altered Lighting System | Is your alteration increasing the connected lighting load (Watts)? ● Yes ● No | |
| 03 | 04 | 05 |
| % of Existing Luminaires Being Altered[1] | Sum Total of Luminaires Being Added or Altered | Calculation Method |
| ☐ < 10% ☐ >= 10% and < 50% ☐ >= 50% | | |

***Please proceed to Table F. Outdoor Lighting Fixture Schedule to define the project's luminaires.***

[1] *FOOTNOTES: % of Existing Luminaires Being Altered = (Sum Total of Luminaires Being Added or Altered / Existing Luminaires within the Scope of the Permit Application) x 100.*



STATE OF CALIFORNIA
## Outdoor Lighting
CALIFORNIA ENERGY COMMISSION

| CERTIFICATE OF COMPLIANCE | | NRCC-LTO-E |
|---|---|---|
| Project Name: 24'x40' (PC #04-122454) Wall HVAC | Report Page: | (Page 2 of 7) |
| | Date Prepared: | 10/30/2023 |

### C. COMPLIANCE RESULTS

*Results in this table are automatically calculated from data input and calculations in Tables F through N. Note: If any cell on this table says "COMPLIES with Exceptional Conditions" refer to Table D. Exceptional Conditions for guidance or see applicable Table referenced below.*

| Calculations of Total Allowed Lighting Power (Watts) 140.7 / 170.2(e)6 or 141.0(b)2L / 180.2(b)4Bv | | | | | | | | | | | Compliance Results | | |
|---|---|---|---|---|---|---|---|---|---|---|---|---|---|
| 01 | | 02 | | 03 | | 04 | | 05 | | 06 | 07 | | 08 | 09 |
| General Hardscape Allowance 140.7(d)1 / 170.2(e)6 (See Table I) | + | Per Application 140.7(d)2 / 170.2(e)6 (See Table J) | + | Sales Frontage 140.7(d)2 (See Table K) | + | Ornamental 140.7(d)2 / 170.2(e)6 (See Table L) | + | Per Specific Area 140.7(d)2 / 170.2(e)6 (See Table M) | OR | Existing Power Allowance 141.0(b)2L / 180.2(b)4Bv (See Table N) | = **Total Allowed** (Watts) | ≥ | **Total Actual** (Watts) | **07 must be >= 08** |
| 0 | + | 15 | + | --- | + | --- | + | --- | OR | --- | = 15 | ≥ | 15 | COMPLIES |
| **Shielding Compliance (See Table G for Details)** | | | | | | | | | | | | | | N/A |
| **Controls Compliance (See Table H for Details)** | | | | | | | | | | | | | | Not applicable |

### D. EXCEPTIONAL CONDITIONS

*This table is auto-filled with uneditable comments because of selections made or data entered in tables throughout the form.*

### E. ADDITIONAL REMARKS

*This table includes remarks made by the permit applicant to the Authority Having Jurisdiction.*



STATE OF CALIFORNIA
## Outdoor Lighting
CALIFORNIA ENERGY COMMISSION

| CERTIFICATE OF COMPLIANCE | | NRCC-LTO-E |
|---|---|---|
| Project Name: 24'x40' (PC #04-122454) Wall HVAC | Report Page: | (Page 3 of 7) |
| | Date Prepared: | 10/30/2023 |

### F. OUTDOOR LIGHTING FIXTURE SCHEDULE

*For new or altered lighting systems demonstrating compliance with 140.7 / 170.2(e)6 all new luminaires being installed and any existing luminaires remaining or being moved within the spaces covered by the permit application are included in the Table below. For altered lighting systems using the Existing Power method per 141.0(b)2L only new luminaires being installed and replacement luminaires being installed as part of the project scope are included (ie, existing luminaires remaining or existing luminaires being moved are not included). Outdoor lighting attached to multifamily buildings and controlled from the inside of a dwelling unit are included in Table H. and are not included here. All other multifamily outdoor lighting is included here.*

**Designed Wattage:**

| 01 | 02 | | 03 | 04 | 05 | 06 | 07 | 08 | 09 | 10 | |
|---|---|---|---|---|---|---|---|---|---|---|---|
| Name or Item Tag | Complete Luminaire Description | | Watts per luminaire[1, 2] | How is Wattage determined | Total Number Luminaires[2] | Luminaire Status[3] | Excluded per 140.7(a) / 170.2(e)6A | Design Watts | Cutoff Req. > 6,200 initial lumen output 130.2(b) / 160.5(c)1[4] | Field Inspector | |
| | | | | | | | | | | Pass | Fail |
| Ext Lt | LED Wall Pack 15W | ☐ Linear | 15 | Mfr. Spec | 1 | New | ☐ | 15 | NA: < 6200 lumens | ☐ | ☐ |
| | | | | | | | **Total Design Watts:** | 15 | | | |

* NOTES: Selections with a * require a note in the space below explaining how compliance is achieved.
*EX: Luminaire is lighting a statue; EXCEPTION 2 to 130.2(b)*

[1] *FOOTNOTES: Authority Having Jurisdiction may ask for Luminaire cut sheets to confirm wattage used for compliance per 130.0(c) / 160.5(b)*

[2] *For linear luminaires, wattage should be indicated as W/lf instead of Watts/luminaire. Total linear feet should be indicated in column 05 instead of number of luminaires.*

[3] *Select "New" for new luminaires in a new outdoor lighting project, or for added luminaires in an alteration. Select "Altered" for replacement luminaires in an alteration. Select "Existing to Remain" for existing luminaires within the project scope that are not being altered and are remaining. Select "Existing Reinstalled" for existing luminaires which are being removed and reinstalled as part of the project scope.*

[4] *Compliance with mandatory shielding requirements is required for luminaires with initial lumen output >= 6,200 unless exempted by 130.2(b)/ 160.5(c)*

### G. SHIELDING REQUIREMENTS (BUG)

*This section does not apply to this project.*



STATE OF CALIFORNIA
## Outdoor Lighting
CALIFORNIA ENERGY COMMISSION

| CERTIFICATE OF COMPLIANCE | | NRCC-LTO-E |
|---|---|---|
| Project Name: 24'x40' (PC #04-122454) Wall HVAC | Report Page: | (Page 4 of 7) |
| | Date Prepared: | 10/30/2023 |

### H. OUTDOOR LIGHTING CONTROLS

*This table demonstrates compliance with controls requirements for all new or altered luminaires installed as part of the permit application. For alteration projects, luminaires which are existing to remain (ie untouched) and luminaires which are removed and reinstalled (wiring only) do not need to be included in this table even if they are within the spaces covered by the permit application.*
*Outdoor lighting for nonresidential buildings, parking garages and common service areas in multifamily buildings must be documented separately from outdoor lighting attached to multifamily buildings and controlled from the inside of a dwelling unit*

**Mandatory Controls for Nonresidential Occupancies, Parking Garages & Common Areas in Multifamily Buildings**

| 01 | 02 | 03 | 04 | 05 | |
|---|---|---|---|---|---|
| Area Description | Shut-Off 130.2(c)1 / 160.5(c) | Auto-Schedule 130.2(c)2 / 160.5(c) | Motion Sensor 130.2(c)3 / 160.5(c) | Field Inspector | |
| | | | | Pass | Fail |

[1] *FOOTNOTE: Text has been abbreviated, please refer to Table 160.5-A to confirm compliance with the specific light source technologies listed.*

[2] *Authority having jurisdiction may ask for cutsheets or other documentation to confirm compliance of light source.*

[3] *Recessed luminaires marked for use in fire-rated installations, and recessed luminaires installed in non-insulated ceilings are excepted from ii and iii.*

### I. LIGHTING POWER ALLOWANCE (per 140.7 / 170.2(e))

*This table includes areas using allowance calculations per 140.7 / 170.2(e). General Hardscape Allowance is per Table 140.7-A/Table 170.2-R while "Use it or lose it" Allowances are per Table 140.7-B /Table 170.2-S. Indicate which allowances are being used to expand sections for user input. Luminaires that qualify for one of the "Use it or lose it" allowances shall not qualify for another "Use it or lose it" allowance.*
*Outdoor lighting attached to multifamily buildings and controlled from the inside of a dwelling unit are included in Table H. and are not included here. All other multifamily outdoor lighting is included here.*

| | 01 | | | | |
|---|---|---|---|---|---|
| | | "Use it or lose it" Allowance (select all that apply) (select all that apply) | | | |
| ☐ General Hardscape Allowance Table I (below) | | ☒ Per Application Table J | ☐ Sales Frontage Table K | ☐ Ornamental Table L | ☐ Per Specific Area Table M |



STATE OF CALIFORNIA
## Outdoor Lighting
CALIFORNIA ENERGY COMMISSION

| CERTIFICATE OF COMPLIANCE | | NRCC-LTO-E |
|---|---|---|
| Project Name: 24'x40' (PC #04-122454) Wall HVAC | Report Page: | (Page 5 of 7) |
| | Date Prepared: | 10/30/2023 |

### J. LIGHTING ALLOWANCE: PER APPLICATION

*This table includes areas using the wattage allowance per application from Table 140.7-B / Table 170.2-S.*

| 01 | 02 | 03 | 04 | 05 | 06 | 07 | 08 | 09 | 10 |
|---|---|---|---|---|---|---|---|---|---|
| Area Description | Application per Table 140.7-B[1] | CALCULATED ALLOWANCE (Watts) | | | DESIGN WATTS | | | | Additional Allowance (Watts) |
| | | # of Locations | Allowance per Location[2] | Extra Allowance (Watts) | Luminaire Name or Item Tag | Watts per Luminaire | # of Luminaires | Design Watts | |
| Entrance / Exit | Building Entrance/Exit | 1 | 19 | 19 | Ext Lt | 15 | 1 | 15 | 15 |
| | | | | | | | Total Design Watts for this Area: | 15 | |
| | | | | | | | **Total Allowance (Watts) All Areas:** | | 15 |

[1] *FOOTNOTES: Primary entrance applications are only available for senior care facilities, healthcare facilities, police stations, hospitals, fire stations, and emergency vehicle facilities.*

[2] *The Allowance per Location for ATMs is 100W for the first ATM and 35W for each additional per Table 140.7-B /Table 170.2-S.*

[3] *For luminaires indicated in Table F as linear, wattage in column 07 is W/lf instead of Watts/luminaire. Total linear feet should be indicated in column 08 instead of number of luminaires.*

### K. LIGHTING ALLOWANCE: SALES FRONTAGE

*This section does not apply to this project.*

### L. LIGHTING ALLOWANCE: ORNAMENTAL

*This section does not apply to this project.*

### M. LIGHTING ALLOWANCE: PER SPECIFIC AREA

*This section does not apply to this project.*

### N. EXISTING CONDITIONS POWER ALLOWANCE (alterations only)

*This section does not apply to this project.*



STATE OF CALIFORNIA
## Outdoor Lighting
CALIFORNIA ENERGY COMMISSION

| CERTIFICATE OF COMPLIANCE | | NRCC-LTO-E |
|---|---|---|
| Project Name: 24'x40' (PC #04-122454) Wall HVAC | Report Page: | (Page 6 of 7) |
| | Date Prepared: | 10/30/2023 |

### O. DECLARATION OF REQUIRED CERTIFICATES OF INSTALLATION

*Selections have been made based on information provided in this document. If any selection has been changed by permit applicant, an explanation should be included in Table E. Additional Remarks. These documents must be provided to the building inspector during construction and can be found online*

| Form/Title |
|---|
| NRCI-LTO-E - Must be submitted for all buildings |

### P. DECLARATION OF REQUIRED CERTIFICATES OF ACCEPTANCE

*There are no NRCA forms required for this project.*



STATE AGENCY APPROVAL

IDENTIFICATION STAMP
DIV. OF THE STATE ARCHITECT
APP. 04-124098 INC:
REVIEWED FOR
SS ☑ FLS ☑ ACS ☑
DATE: 11/14/24


SKC COMPANY
15345 FAIRFIELD RANCH ROAD, SUITE #160, CHINO, CA 91709
OFFICE: (909) 740-3120, FAX: (909) 726-9470
WEBSITE: WWW.SKCCOMPANY.COM
MANUFACTURER #MF 1279666 DEALER # DL 1279666
GC LIC # 992118 SBE CERTIFIED



ALL DESIGNS INDICATED ON THESE PLANS/DRAWINGS ARE PROPERTY OF SKC, INC AND ARE FOR THE USE BY SKC IN THE SPECIFIED JOB ONLY. THEY SHALL NOT BE USED AND/OR DUPLICATED OR TRANSMITTED IN ANY FORM, FOR ANY PURPOSE WITHOUT THE PRIOR WRITTEN CONSENT OF SKC, INC. ANY UNAUTHORIZED USE OF THESE PLANS SHALL SUBJECT THE OWNER OF SAID PROPERTY TO LIQUIDATED DAMAGES OF $75,000.00. THESE PLANS ARE PROTECTED UNDER THE PROVISIONS OF THE 1976 COPYRIGHT ACT COPYRIGHT SKC, © ALL RIGHTS RESERVED.


DISTRICT/CUSTOMER NAME:
NEXTMOD

SCHOOL/SITE NAME:
STOCKPILE

SHEET TITLE:
PC TITLE 24 REPORT
WORST CASE SCENARIO &
CEC FORMS

PRE-CHECK (PC) DOCUMENT
CODE: 2022 CBC
A SEPARATE PROJECT APPLICATION FOR CONSTRUCTION IS REQUIRED

APPROVED
DIV. OF THE STATE ARCHITECT
APP: 04-122454 PC
REVIEWED FOR
SS ☑ FLS ☑ ACS ☑ CG ☑
DATE: 11/14/2023

PROFESSIONAL OF RECORD ON PC


ORION
Structural Engineering, Inc.
11305 RANCHO BERNARDO RD
SUITE 121
SAN DIEGO CA, 92127
PHONE (858) 679-1974


RYAN J. OSER
EXP. 12/31/24
STRUCTURAL
STATE OF CALIFORNIA

FIRM: Orion Structural Engineering, Inc.
ADDRESS: 11305 Rancho Bernardo Road Ste 121
CITY: San Diego, CA
PHONE: 858-679-1974

PROJECT SPECIFIC PROFESSIONAL OF RECORD

FIRM:
ADDRESS:
CITY:
PHONE:

REVISIONS

1 -
2 -
3 -
4 -
5 -

| | |
|---|---|
| PROJECT NO.: | 00-0000 |
| DRAFTER: | 00 |
| SCALE: | AS NOTED |
| DATE: | 00-00-00 |

SHEET NUMBER
E7.1

10/31/2023 12:19:33 PM

STATE OF CALIFORNIA

## Outdoor Lighting

CALIFORNIA ENERGY COMMISSION

| CERTIFICATE OF COMPLIANCE | | | NRCC-LTO-E |
|---|---|---|---|
| **Project Name:** 24'x40' (PC #04-122454) Wall HVAC | | **Report Page:** | **(Page 7 of 7)** |
| **Project Address:** | Classroom Buildings | **Date Prepared:** | 10/30/2023 |

| DOCUMENTATION AUTHOR'S DECLARATION STATEMENT | |
|---|---|
| **I certify that this Certificate of Compliance documentation is accurate and complete.** | |
| Documentation Author Name: Jeffrey C. Chan-Lugay | Documentation Author Signature: Jeffrey C. Chan-Lugay |
| Company: SKC Company | Signature Date: 10/30/2023 |
| Address: 15345 Fairfield Ranch Road, Suite #160 | CEA/ HERS Certification Identification (if applicable): 992118 |
| City/State/Zip: Chino Hills CA 91709 | Phone: (909) 740-3120 |

**RESPONSIBLE PERSON'S DECLARATION STATEMENT**

I certify the following under penalty of perjury, under the laws of the State of California:

1. The information provided on this Certificate of Compliance is true and correct.
2. I am eligible under Division 3 of the Business and Professions Code to accept responsibility for the building design or system design identified on this Certificate of Compliance (responsible designer)
3. The energy features and performance specifications, materials, components, and manufactured devices for the building design or system design identified on this Certificate of Compliance conform to the requirements of Title 24, Part 1 and Part 6 of the California Code of Regulations.
4. The building design features or system design features identified on this Certificate of Compliance are consistent with the information provided on other applicable compliance documents, worksheets, calculations, plans and specifications submitted to the enforcement agency for approval with this building permit application.
5. I will ensure that a completed signed copy of this Certificate of Compliance shall be made available with the building permit(s) issued for the building, and made available to the enforcement agency for all applicable inspections. I understand that a completed signed copy of this Certificate of Compliance is required to be included with the documentation the builder provides to the building owner at occupancy.

| | |
|---|---|
| Responsible Designer Name: Sean Khan | Responsible Designer Signature: Sean Khan |
| Company: SKC Company | Date Signed: 2023-10-30 |
| Address: 15345 Fairfield Ranch Road, Suite #160 | License: 992118 |
| City/State/Zip: Chino Hills CA 91709 | Phone: 909-740-3120 |



STATE OF CALIFORNIA

## Solar And Battery

CALIFORNIA ENERGY COMMISSION

**CERTIFICATE OF COMPLIANCE** NRCC-SAB-E

*This document is used to demonstrate compliance with prescriptive PV and battery requirements in 140.10/ 170.2 for nonresidential, multifamily and mixed-use buildings and prescriptive solar thermal requirements in 170.2(d)3C for multifamily and hotel/ motel occupancies. When PV/battery/solar thermal requirements don't apply or are traded using the performance approach, this document demonstrates compliance with mandatory solar readiness requirements in 110.10/ 160.8 for newly constructed buildings which are either multifamily ten stories or fewer, hotel/motel ten stories or fewer or all other nonresidential buildings three stories or fewer. It is also used to demonstrate compliance with solar readiness in 110.10/ 160.8 for additions to nonresidential, multifamily or hotel/motel building types which add more than 2,000 $ft^2$ of roof area. Alterations, or additions of less than 2,000 $ft^2$ of roof area, are not required to comply with solar readiness, solar PV and battery requirements and do not need to complete this document.*

| | | | |
|---|---|---|---|
| **Project Name:** 24'x40' (PC #04-122454) Wall HVAC | | **Report Page:** | **(Page 1 of 5)** |
| **Project Address:** | Classroom Buildings | **Date Prepared:** | 10/30/2023 |

| A. GENERAL INFORMATION | | | | | |
|---|---|---|---|---|---|
| 01 | Project Location (city) | Blue Canyon | 04 | Building Occupancies | All Other Occupancies |
| 02 | Climate Zone | 16 | 05 | Construction Type | New construction |
| 03 | Conditioned Floor Area ($ft^2$) | 960 | 06 | Number of Stories | Bldg <= 3 stories |

**B. PROJECT SCOPE**

*The compliance path the project is using to comply per 110.10(b)1B/ 140.10/ 170.2(g and h) is indicated below.*

| Compliance with Solar Photovoltaic (PV) and Battery Requirements in 140.10/ 170.2(g and h) | | |
|---|---|---|
| | 01 | |
| ☐ | Provided PV system and battery storage sized per 140.10/ 170.2 (g and h) | The project has included an installed PV system and battery storage system per requirements in 140.10/ 170.2(g and h) as documented in Table J. |
| ☐ | Exception to PV and Battery: Not enough Solar Access Roof Area | The total of all available Solar Access Roof Area(s) of the project site is less than three percent of the conditioned floor area as documented in Table J. |
| ☐ | Exception to PV and Battery: Required PV < 4kW | The required PV system size is less than 4 kW dc as documented in Table J.. |
| ☐ | Exception to PV and Battery: No contiguous Solar Access Roof Area | The Solar Access Roof Area(s) of the project site contains less than 80 contiguous square feet as documented in Table J. |
| ☐ | Exception to PV and Battery: Can't meet snow load | The project has a roof design where the enforcement authority has verified it is not possible for the PV system, including panels, modules, components, supports, and attachments to the roof structure, to meet ASCE 7-16 Chapter 7, Snow Loads. |
| ☐ | Exception to PV and Battery: Multi-tenant without VNEM or Community Solar | The project is a multi-tenant building in an area where a load serving entity does not provide either a Virtual Net Metering (VNEM) or community solar program. |
| ☐ | The prescriptive PV/battery requirement has been traded off using the performance compliance approach as documented on the PRF Certificate of Compliance form. | |



STATE OF CALIFORNIA

## Solar And Battery

CALIFORNIA ENERGY COMMISSION

| CERTIFICATE OF COMPLIANCE | | NRCC-SAB-E |
|---|---|---|
| **Project Name:** 24'x40' (PC #04-122454) Wall HVAC | **Report Page:** | **(Page 2 of 5)** |
| | **Date Prepared:** | 10/30/2023 |

| Compliance with Solar Thermal Water Heating Requirements in 170.2(d)3C (Multifamiily and hotel/ motel occupancies only) | |
|---|---|
| | 01 |
| ☐ | The project includes a hotel/motel or multifamily occupancy with a gas or propane central water-heating system (serves 2+ dwelling units) and includes a permanently installed domestic solar water-heating system to comply with 170.2(d)3C and Reference Residential Appendix RA4, as documented in Table H.<br>Compliance meets Exception 2 to solar ready requirements in 110.10(b). |

**C. COMPLIANCE RESULTS**

*Results in this table are automatically calculated from data input and calculations in Tables F through I. Note: If any cell on this table says "DOES NOT COMPLY" or "COMPLIES with Exceptional Conditions" refer to Table D. for guidance or see the applicable Table referenced below.*

| Allocated Solar Zone | | | | Installed PV System | | | | Installed SWH System | | | | Smart Tstat and Alternative EE Measure | | Compliance Results |
|---|---|---|---|---|---|---|---|---|---|---|---|---|---|---|
| 01 | | 02 | OR | 03 | | 04 | OR | 05 | | 06 | OR | 07 | 08 | |
| Required Minimum Area ($ft^2$) | <= | Designated Area ($ft^2$) | | Required Minimum DC Power Rating (Watts) | <= | Designed DC Power Rating (Watts) | | Required Minimum Solar Savings Fraction | <= | Designed/Rated Solar Savings Fraction | | JA5 Compliant Thermostat Specified? | Alternative Energy Efficiency Measure | COMPLIES |
| (See Table F) | | | | (See Tables G or J) | | | | (See Table H) | | | | (See Table I) | | |
| | <= | | OR | 0 | <= | 0 | OR | | <= | | OR | | | |
| | | | Location in construction documents showing the location for inverters and metering equipment and a pathway for the routing of conduit/ plumbing to the electrical service/ water heating system per §110.10(c). | | | | | | | | | | | |
| Battery storage system design meets the minimum requirements in Joint Appendix JA12 and the minimum energy (kWh)/ power (kW) capacity per Table J. | | | | | | | | | | | | | | COMPLIES |

**D. EXCEPTIONAL CONDITIONS**

*This table is auto-filled with uneditable comments because of selections made or data entered in tables throughout the form.*

**E. ADDITIONAL REMARKS**

*This table is includes remarks made by the permit applicant to the Authority Having Jurisdiction.*



STATE OF CALIFORNIA

## Solar And Battery

CALIFORNIA ENERGY COMMISSION

| CERTIFICATE OF COMPLIANCE | | NRCC-SAB-E |
|---|---|---|
| **Project Name:** 24'x40' (PC #04-122454) Wall HVAC | **Report Page:** | **(Page 3 of 5)** |
| | **Date Prepared:** | 10/30/2023 |

**F. ALLOCATED SOLAR ZONE**

*This section does not apply to this project.*

**G. PERMANENTLY INSTALLED SOLAR PV FOR SOLAR READY EXCEPTION**

*This section does not apply to this project.*

**H. PERMANENTLY INSTALLED SOLAR HOT WATER SYSTEMS**

*This section does not apply to this project.*

**I. SMART THERMOSTATS AND ALTERNATIVE EFFICIENCY MEASURE FOR SOLAR READY EXCEPTION**

*This section does not apply to this project.*



STATE OF CALIFORNIA

## Solar And Battery

CALIFORNIA ENERGY COMMISSION

| CERTIFICATE OF COMPLIANCE | | NRCC-SAB-E |
|---|---|---|
| **Project Name:** 24'x40' (PC #04-122454) Wall HVAC | **Report Page:** | **(Page 4 of 5)** |
| | **Date Prepared:** | 10/30/2023 |

**J. PHOTOVOLTAIC (PV) AND BATTERY SYSTEMS**

*This table documents compliance with prescriptive photovoltaic and battery system requirements in 140.10/ 170.2(g and h). Unless the project meets one of the listed exceptions, or trades-off PV in an energy model using performance path, 140.10/ 170.2(g and h) requires installed photovoltaic and battery systems for newly constructed buildings. The installed PV systems must meet the minimum requirements in Joint Appendix 11.*

**Photovoltaic (PV) System**

| 01 | 02 | 03 | 04 | 05 | 06 | 07 | 08 |
|---|---|---|---|---|---|---|---|
| Occupancy | Conditioned Floor Area ($ft^2$) | Area of New Roof[1] ($ft^2$) | Roof Area < 70% Solar Access[2] ($ft^2$) | Plansheet or Document showing Solar Access Calculations | Occupied Roof Area[3] ($ft^2$) | Solar Access Roof Area (SARA) ($ft^2$) | Min Size of PV System Required (kWdc) |
| | | | | | | **Total Min Size PV System Required for all Spaces (kWdc):** | |
| | | | | | | **Total Size PV System in Design (kWdc):** | |

*[1]FOOTNOTES: Includes the area of the building's roof space capable of structurally supporting a PV system and the area of all roof space on covered parking areas, carports, and all other newly constructed structures on the site that are compatible with supporting a PV system per Title 24, Part 2 Section 1511.2.*
*[2]Solar access must be determined using CEC approved solar access calculation tools found at https://www.energy.ca.gov/programs-and-topics/programs/building-energy-efficiency-standards/solar-assessment-tools.*
*[3]As specified by CBC Section 503.1.4.*

**K. DECLARATION OF REQUIRED CERTIFICATES OF INSTALLATION**

*Selections have been made based on information provided in this document. If any selections have been changed by the permit applicant, an explanation should be included Table E. Additional Remarks and ExceptionalConditionMessageCCSABE += UserChangedSelectionInCI. These documents must be provided to the building inspector during construction and can be found online*

| Form/Title |
|---|
| NRCI-SAB-01-E - Must be submitted for all buildings that must comply with solar readiness or PV/Battery requirements. |

**L. DECLARATION OF REQUIRED CERTIFICATES OF ACCEPTANCE**

*There are no forms required for this project.*



STATE OF CALIFORNIA

## Solar And Battery

CALIFORNIA ENERGY COMMISSION

| CERTIFICATE OF COMPLIANCE | | | NRCC-SAB-E |
|---|---|---|---|
| **Project Name:** 24'x40' (PC #04-122454) Wall HVAC | | **Report Page:** | **(Page 5 of 5)** |
| **Project Address:** | Classroom Buildings | **Date Prepared:** | 10/30/2023 |

| DOCUMENTATION AUTHOR'S DECLARATION STATEMENT | |
|---|---|
| **I certify that this Certificate of Compliance documentation is accurate and complete.** | |
| Documentation Author Name: Jeffrey C. Chan-Lugay | Documentation Author Signature: Jeffrey C. Chan-Lugay |
| Company: SKC Company | Signature Date: 2023-10-30 |
| Address: 15345 Fairfield Ranch Road, Suite #160 | CEA/ HERS Certification Identification (if applicable): 992118 |
| City/State/Zip: Chino Hills CA 91709 | Phone: (909) 740-3120 |

**RESPONSIBLE PERSON'S DECLARATION STATEMENT**

I certify the following under penalty of perjury, under the laws of the State of California:

1. The information provided on this Certificate of Compliance is true and correct.
2. I am eligible under Division 3 of the Business and Professions Code to accept responsibility for the building design or system design identified on this Certificate of Compliance (responsible designer)
3. The energy features and performance specifications, materials, components, and manufactured devices for the building design or system design identified on this Certificate of Compliance conform to the requirements of Title 24, Part 1 and Part 6 of the California Code of Regulations.
4. The building design features or system design features identified on this Certificate of Compliance are consistent with the information provided on other applicable compliance documents, worksheets, calculations, plans and specifications submitted to the enforcement agency for approval with this building permit application.
5. I will ensure that a completed signed copy of this Certificate of Compliance shall be made available with the building permit(s) issued for the building, and made available to the enforcement agency for all applicable inspections. I understand that a completed signed copy of this Certificate of Compliance is required to be included with the documentation the builder provides to the building owner at occupancy.

| | |
|---|---|
| Responsible Designer Name: Sean Khan | Responsible Designer Signature: Sean Khan |
| Company: SKC Company | Date Signed: 2023-10-30 |
| Address: 15345 Fairfield Ranch Road, Suite #160 | License: 992118 |
| City/State/Zip: Chino Hills CA 91709 | Phone: 909-740-3120 |



STATE AGENCY APPROVAL

IDENTIFICATION STAMP
DIV. OF THE STATE ARCHITECT
APP. 04-124098 INC:
REVIEWED FOR
SS ☑ FLS ☑ ACS ☑
DATE: 11/14/24


SKC COMPANY
15345 FAIRFIELD RANCH ROAD, SUITE #160, CHINO, CA 91709
OFFICE: (909) 740-3120, FAX: (909) 726-9470
WEBSITE: WWW.SKCCOMPANY.COM
MANUFACTURER #MF1279666 DEALER # DL1279666
GC LIC # 992118 SBE CERTIFIED



ALL DESIGNS INDICATED ON THESE PLANS/DRAWINGS ARE PROPERTY OF SKC, INC AND ARE FOR THE USE BY SKC IN THE SPECIFIED JOB ONLY. THEY SHALL NOT BE USED AND/OR DUPLICATED OR TRANSMITTED IN ANY FORM, FOR ANY PURPOSE WITHOUT THE PRIOR WRITTEN CONSENT OF SKC, INC. ANY UNAUTHORIZED USE OF THESE PLANS SHALL SUBJECT THE OWNER OF SAID PROPERTY TO LIQUIDATED DAMAGES OF $75,000.00. THESE PLANS ARE PROTECTED UNDER THE PROVISIONS OF THE 1976 COPYRIGHT ACT COPYRIGHT SKC, © ALL RIGHTS RESERVED.


DISTRICT/CUSTOMER NAME: NEXTMOD

SCHOOL/SITE NAME: STOCKPILE

SHEET TITLE:

PC TITLE 24 REPORT
WORST CASE SCENARIO &
CEC FORMS

PRE-CHECK (PC) DOCUMENT
CODE: 2022 CBC
A SEPARATE PROJECT APPLICATION FOR
CONSTRUCTION IS REQUIRED

APPROVED
DIV. OF THE STATE ARCHITECT
APP: 04-122454 PC
REVIEWED FOR
SS ☑ FLS ☑ ACS ☑ CG ☑
DATE: 11/14/2023

PROFESSIONAL OF RECORD ON PC

ORION
Structural Engineering, Inc.
11305 RANCHO BERNARDO RD
SUITE 121
SAN DIEGO CA. 92127
PHONE (858) 679-1974

REGISTERED PROFESSIONAL ENGINEER
RYAN J. OYER
No. S 4437
EXP. 12/31/24
STRUCTURAL
STATE OF CALIFORNIA

FIRM: Orion Structural Engineering, Inc.
ADDRESS: 11305 Rancho Bernardo Road Ste 121
CITY: San Diego, CA
PHONE: 858-679-1974

PROJECT SPECIFIC PROFESSIONAL OF RECORD

FIRM:
ADDRESS:
CITY:
PHONE:

REVISIONS

1 -
2 -
3 -
4 -
5 -

| | |
|---|---|
| PROJECT NO.: | 00-0000 |
| DRAFTER: | 00 |
| SCALE: | AS NOTED |
| DATE: | 00-00-00 |

SHEET NUMBER

# E7.2

10/31/2023 12:20:05 PM

## GENERAL NOTES

1. ALL WORK SHALL CONFORM TO 2022 TITLE 24, CALIFORNIA CODE OF REGULATIONS (CCR)
2. CHANGES TO THE APPROVED DRAWINGS AND SPECIFICATIONS SHALL BE MADE BY AN ADDENDUM OR A CONSTRUCTION CHANGE DOCUMENT (CCD) APPROVED BY THE DIVISIONS OF THE STATE ARCHITECT, AS REQUIRED BY SECTION 4-338, PART 1, TITLE 24, CCR
3. A "DSA CERTIFIED" PROJECT INSPECTOR EMPLOYED BY THE DISTRICT (OWNER) AND APPROVED BY THE DSA SHALL PROVIDE CONTINUOUS INSPECTION OF THE WORK. THE DUTIES OF THE INSPECTOR ARE DEFINED IN SECTION 4-342, PART 1, TITLE 24, CCR
4. A DSA ACCEPTED TESTING LABORATORY DIRECTLY EMPLOYED BY THE DISTRICT (OWNER) SHALL CONDUCT ALL THE REQUIRED TEST AND INSPECTIONS FOR THE PROJECT
5. THIS PC IS NOT APPROVED FOR CHAPTER 7A WILDLAND URBAN AREAS. WHEN THIS PC IS SITE ADAPTED FOR PROJECT SPECIFIC, THE REQUIREMENTS IS TO BE REVIEWED AND APPROVED BY THE PROJECT SPECIFIC PLAN REVIEWER

## BUILDING CODES AND STANDARDS

2022 CALIFORNIA ADMINISTRATIVE CODE (CAC), PART 1, TITLE 24, CCR
2022 CALIFORNIA BUILDING CODE (CBC), PART 2, TITLE 24, CCR
2022 CALIFORNIA ELECTRICAL CODE (CEC), PART 3, TITLE 24, CCR
2022 CALIFORNIA MECHANICAL CODE (CMC), PART 4, TITLE 24, CCR
2022 CALIFORNIA PLUMBING CODE (CPC), PART 5, TITLE 24, CCR)
2022 CALIFORNIA ENERGY CODE (CEC), PART 6, TITLE 24, CCR
2022 CALIFORNIA FIRE CODE (CFC), PART 9, TITLE 24, CCR
2022 CALIFORNIA EXISTING BUILDING STANDARDS CODE (CEBC), PART 10, TITLE 24
2022 CALIFORNIA GREEN BUILDING STANDARD CODE (CALGREEN), PART 11, TITLE 24 CCR
2022 CALIFORNIA REFERENCED STANDARDS CODE, PART 12, TITLE 24, CCR
TITLE 19 CCR, PUBLIC SAFETY, STATE FIRE MARSHALL REGULATIONS


SKC COMPANY
15345 FAIRFIELD RANCH RD - SUITE 160 CHINO HILLS, CA 91709
OFFICE: (909) 740-3120, FAX: (909) 726-9470
WEBSITE: WWW.SKCCOMPANY.COM
MANUFACTURER #MF1279666 DEALER # DL1279666
GC LIC # 992118 SBE CERTIFIED


# 2022 CBC
# ACCESSIBLE RAMP / LANDING / STAIR PC DESIGN (LESS THAN 30" SYSTEM)
# RISK CATEGORY II
# PC 04-122029

## DRAWING SYMBOLS & LEGEND

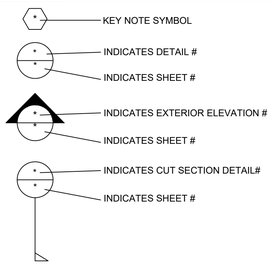


## SHEET INDEX


| SHEET NO. | ARCHITECTURAL |
|---|---|
| R-1 | COVER SHEET |
| R-2 | DSA 103 TEST & SPECIAL INSPECTIONS SAMPLE |
| R-3 | CONSTRUCTION SPECIFICATIONS & NOTES |
| R-4 | STANDARD RAMP & LANDING (ATTACHED HANDRAIL TO BUILDING) |
| R-5 | OFFSET RAMP & LANDING (FREE STANDING HANDRAILS) |
| R-6 | COMMON LANDING & RAMP |
| R-7 | STAIR & LANDING DETAILS |
| R-8 | SWITCHBACK RAMP & LANDING |
| R-9 | RAMP & LANDING DETAILS |

TOTAL SHEET COUNT: 9


## DESIGN PARAMETERS

1. RAMP LIVE LOAD: 100 PSF
2. NO SNOW LOAD (GROUND SNOW LOAD Pg= 0 psf)
3. NO FLOOD LOADING
4. WIND:
   WIND DESIGN PER ASCE 7-16, CHAPTER 29
   SEE SCHEDULE BELOW FOR SITE SPECIFIC PARAMETERS
5. SEISMIC:
   RISK CATEGORY=II
   R = 1.25 (ASCE 7-16 TABLE 15.4-2)
   Ie = 1.0
   SITE CLASS = A,B, OR D
   Ss = 2.41
   Fa = 1.0
   $S_{DS}$ = 1.61
   $S_1$ = 1.4

   SITE CLASS = C, OR D (DEFAULT)
   Ss = 2.01
   Fa = 1.2
   $S_{DS}$ = 1.61
   $S_1$ = 1.4
   Cs = 1.61
6. ALLOWABLE SOIL BEARING = 1000 PSF

## SITE SPECIFIC PARAMETERS

INSTRUCTIONS: DESIGN PROFESSIONAL SHALL CHECK THE APPROPRIATE SELECTION BOXES BELOW AND ENTER THE DESIGN PARAMETERS APPLICABLE TO THE SPECIFIC PROJECT SITE

### WIND

V = 95 MPH < 95 MPH BASIC DESIGN WIND SPEED

Kzt = 1.0 ≤ 1.0

EXPOSURE: ☒ C ☐ D

### SEISMIC

SELECT ONE

☒ DESIGN BASED ON SITE CLASS D DEFAULT
NO GEOTECHNICAL INVESTIGATION REQUIRED
Ss = 2.2 Fa = 1.2

☐ DESIGN BASED ON SITE CLASS DETERMINED PER CHAPTER 20 OF ASCE 7-16
GEOTECHNICAL INVESTIGATION PROVIDED
SITE CLASS: ☐ C ☐ D ☐ E
Ss = _____ Fa = _____ PER ASCE 7-16 SUPPL 3 TABLE 11.4-1

☐ DESIGN BASED ON SITE CLASS GROUND MOTION HAZARD ANALYSIS PER CHAPTER 21 OF ASCE 7-16
SHORT-PERIOD DESIGN SPECTRAL RESPONSE PARAMETER, $S_{DS}$, SHALL BE AS SPECIFIED IN GEOTECHNICAL INVESTIGATION
CGS APPROVAL REQUIRED
NOT ELIGIBLE FOR OTC REVIEW
SITE CLASS: ☐ C ☐ D ☐ E
Ss = _____ Fa = _____

$S_{DS}$ = 2/3 Fa Ss= _____ ≤ 1.607

Cs = 1.607 USED IN DESIGN
SEISMIC DESIGN CATEGORY: ☐ D ☐ E
ASCE 7-16 12.8.1.3 HAS NOT BEEN USED IN CALCULATION OF Sds

## PC LIMITATIONS

1. THE MAXIMUM DECK HEIGHT DESIGNED ON THIS PC IS 30". VERIFY WITH BUILDING MANUFACTURER MAXIMUM FINISH FLOOR HEIGHT FOR ABOVE GRADE FOUNDATIONS. THE MAXIMUM DECK HEIGHT SHALL BE SET FORTH PER THE BUILDING MANUFACTURER MAXIMUM FINISH FLOOR HEIGHT HOWEVER NOT TO EXCEED 30" MAX
2. THE MAXIMUM RAMP HANDRAIL DESIGN ON THIS PC IS 34" AFF
3. THIS PC IS NOT DESIGNED FOR DECKS HIGHER THAN 30" OR A GUARDRAIL DESIGN AT 42" MIN WHEN DECK HEIGHT EXCEEDS 30"
4. THE MINIMUM POINT LOAD DESIGNED ON THE HANDRAILS IS 200#
5. THE RAMP CLEAR WIDTH SET FORTH ON THIS PC IS DESIGNED FOR OCCUPANCIES LESS THAN 100 (OR NO GREATER THAN 48" CLEAR WIDTH)
6. THE STAIRS MAXIMUM CLEAR WIDTH SET FORTH ON THIS PC IS 48" MAX
7. THE MAXIMUM RAMP LENGTH SET FORTH ON THIS PC IS 30'-0" MAX
8. THE MAXIMUM SINGLE DECK SECTION SET FORTH ON THIS PC IS 6'-6" X 19'-10 1/2". ADDITIONAL DECK SECTIONS CAN BE ADDED TOGETHER (SEE #8/R-9) ON ANY SIDE OF THE DECK. THE MINIMUM DECK SECTION IS SHALL BE NO LESS THAN 4'-0" X 1'-0"
9. **THE DESIGN PROFESSIONAL HAS EXEMPTED THIS RAMP FROM SPECIAL INSPECTION REQUIREMENTS FOR MATERIAL IDENTIFICATION AND STRUCTURAL WELDING. RAMP SHALL NOT BE MODIFIED NOR HAVE SHIMS ADDED CAUSING THE DISTANCE BETWEEN THE HIGHEST RAMP WALKING SURFACE AND THE ADJACENT GRADE TO BE MORE THAN 30" INCHES. IF THIS CONDITION IS NOT MET, STRUCTURAL TESTING AND/OR INSPECTION WILL BE REQUIRED TO VERIFY MATERIALS AND STRUCTURAL WELDING. THIS APPLIES TO SCOPE OF WORK INCLUDING NEW CONSTRUCTION, ALTERATION, OR RELOCATION OF RAMP. REFER TO DSA 103 APPENDIX, IR PC-2 AND IR PC-6**
10. RAMP SLOPE SHALL NOT BE LESS THAN 1:12 (OR GREATER THAN 8.33% MAX). RAMP SLOPE GRATER THAN 1:20 (OR LESS THAN 5.0%) DOES NOT NEED TO COMPLY WITH HANDRAIL REQUIREMENTS

STATE AGENCY APPROVAL


SKC COMPANY
15345 FAIRFIELD RANCH RD - SUITE 160 CHINO HILLS, CA 91709
OFFICE: (909) 740-3120, FAX: (909) 726-9470
WEBSITE: WWW.SKCCOMPANY.COM
MANUFACTURER #MF1279666 DEALER # DL1279666
GC LIC # 992118 SBE CERTIFIED



ALL DESIGNS INDICATED ON THESE PLANS/DRAWINGS ARE PROPERTY OF SKC, INC AND ARE FOR THE USE BY SKC IN THE SPECIFIED JOB ONLY. THEY SHALL NOT BE USED AND/OR DUPLICATED OR TRANSMITTED IN ANY FORM, FOR ANY PURPOSE WITHOUT THE PRIOR WRITTEN CONSENT OF SKC, INC. ANY UNAUTHORIZED USE OF THESE PLANS SHALL SUBJECT THE OWNER OF SAID PROPERTY TO LIQUIDATED DAMAGES OF $75,000.00. THESE PLANS ARE PROTECTED UNDER THE PROVISIONS OF THE 1976 COPYRIGHT ACT COPYRIGHT SKC, © ALL RIGHTS RESERVED.


DISTRICT/CUSTOMER NAME:

SCHOOL/SITE NAME:

SHEET TITLE:

COVER SHEET

PRE-CHECK (PC) DOCUMENT
CODE: 2022 CBC
A SEPARATE PROJECT APPLICATION FOR CONSTRUCTION IS REQUIRED

APPROVED
DIV. OF THE STATE ARCHITECT
APP: 04-122029 PC
REVIEWED FOR
SS ☑ FLS ☑ ACS ☑ CG ☐
DATE: 09/27/2023

PROFESSIONAL OF RECORD ON PC


ORION
Structural Engineering, Inc.
11305 RANCHO BERNARDO RD
SUITE 121
SAN DIEGO CA, 92127
PHONE (858) 679-1974
REGISTERED PROFESSIONAL ENGINEER
RYAN J. ORR
No. 3237
EXP. 12/31/24
STRUCTURAL
STATE OF CALIFORNIA

FIRM: ORION STRUCTURAL ENGINEERING, INC.
ADDRESS: 11305 RANCHO BERNARDO ROAD, SUITE 121
CITY: SAN DIEGO, CA 92127
PHONE: (858) 679-1974

PROJECT SPECIFIC PROFESSIONAL OF RECORD

FIRM:
ADDRESS:
CITY:
PHONE:


REVISIONS

1 -
2 -
3 -
4 -
5 -

| | |
|---|---|
| PROJECT NO.: | 00-0000 |
| DRAFTER: | 00 |
| SCALE: | AS NOTED |
| DATE: | 00-00-00 |

SHEET NUMBER

R-1

9/26/2023 9:27:23 AM

## DSA 103-22: LISTING OF STRUCTURAL TESTS & SPECIAL INSPECTIONS, 2022 CBC

| Application Number: | School Name: | School District: |
|---|---|---|
| 04-122029 | Accessible Ramp Landing Stair PC | SKC Company |
| DSA File Number: | Increment Number: | Date Created: |
| PC-116 | | 2023-02-20 13:43:59 |

### 2022 CBC

IMPORTANT: This form is only a summary list of structural tests and some of the special inspections required for the project. Generally, the structural tests and special inspections noted on this form are those that will be performed by the Geotechnical Engineer of Record, Laboratory of Record, or Special Inspector. The actual complete test and inspection program must be performed as detailed on the DSA approved documents. The appendix at the bottom of this form identifies work NOT subject to DSA requirements for special inspection or structural testing. The project inspector is responsible for providing inspection of all facets of construction, including but not limited to, special inspections not listed on this form such as structural wood framing, high-load wood diaphragms, cold-formed steel framing, anchorage of non-structural components, etc., per Title 24, Part 2, Chapter 17A (2022 CBC).

**NOTE: Undefined section and table references found in this document are from the CBC, or California Building Code.

KEY TO COLUMNS

| 1. TYPE | 2. PERFORMED BY |
|---|---|
| Continuous – Indicates that a continuous special inspection is required<br><br>Periodic – Indicates that a periodic special inspection is required<br><br>Test – Indicates that a test is required | GE (Geotechnical Engineer) – Indicates that the special inspection shall be performed by a registered geotechnical engineer or his or her authorized representative.<br><br>LOR (Laboratory of Record) – Indicates that the test or special inspection shall be performed by a testing laboratory accepted in the DSA Laboratory Evaluation and Acceptance (LEA) Program. See CAC Section 4-335.<br><br>PI (Project Inspector) – Indicates that the special inspection may be performed by a project inspector when specifically approved by DSA.<br><br>SI (Special Inspection) – Indicates that the special inspection shall be performed by an appropriately qualified/approved special inspector. |



## DSA 103-22: LISTING OF STRUCTURAL TESTS & SPECIAL INSPECTIONS (OTHER), 2022 CBC

| Application Number: | School Name: | School District: |
|---|---|---|
| 04-122029 | Accessible Ramp Landing Stair PC | SKC Company |
| DSA File Number: | Increment Number: | Date Created: |
| PC-116 | | 2023-02-20 13:43:59 |

X1. OTHER:

| | Test or Special Inspection | Type | Performed By | Code References and Notes |
|---|---|---|---|---|
| ☐ | a. Load test for identified product(s): | Test | LOR | 1709A.2, 1709A.3. Testing is not required for: 1) a product with a valid evaluation service report per DSA IR A-5; or 2) a product that can be justified by structural calculation. |
| ☐ | b. Installation torque for non-HS bolts | Continuous | SI* | Applicable to communication towers identified as Essential Service Facility Projects (ESFP). Calibrated wrench use required, verified by SI during installation. DSA Policy PL 18-01: Communication Towers, Poles and Buildings Utilized by State Agencies for Essential Services Communications.*EXCEPTION: Non-ESFP may use PI without need for notification to DSA. |
| ☐ | c. | | | |



## Appendix: Work Exempt from DSA Requirements for Structural Tests / Special Inspections

| Application Number: | School Name: | School District: |
|---|---|---|
| 04-122029 | Accessible Ramp Landing Stair PC | SKC Company |
| DSA File Number: | Increment Number: | Date Created: |
| PC-116 | | 2023-02-20 13:43:59 |

Exempt items given in DSA IR A-22 or the 2019 CBC (including DSA amendments) and those items identified below with a check mark by the design professional are NOT subject to DSA requirements for the structural tests / special inspections noted. Items marked as exempt shall be identified on the approved construction documents. The project inspector shall verify all construction complies with the approved construction documents.

| | SOILS: |
|---|---|
| ☐ | 1. Deep foundations acting as a cantilever footing with a design based on minimum allowable pressures per CBC Table 1806A.2 and without a geotechnical report for the following cases: A) free standing sign or scoreboard, B) cell or antenna towers and poles less than 35'-0" tall (e.g., lighting poles, flag poles, poles supporting open mesh fences, etc.), C) single-story structure with dead load less than 5 psf (e.g., open fabric shade structure), or D) covered walkway structure with an apex height less than 10'-0" above adjacent grade. |
| ☐ | 2. Shallow foundations, etc. are exempt from special inspections and testing by a Geotechnical Engineer for the following cases: A) buildings without a geotechnical report and meeting the exception item #1 criteria in CBC Section 1803A.2 supported by native soil (any excavation depth) or fill soil (not exceeding 12" depth per CBC Section 1804A.6), B) soil scarification/recompaction not exceeding 12" depth, C) native or fill soil supporting exterior non-structural flatwork (e.g., sidewalks, site concrete ramps, site stairs, parking lots, driveways, etc.), D) unpaved landscaping and playground areas, or E) utility trench backfill. |

| | CONCRETE/MASONRY: |
|---|---|
| ☐ | 1. Post-installed anchors for the following: A) exempt non-structural components (e.g., mechanical, electrical, plumbing equipment - see item 7 for "Welding" in the Appendix below) given in CBC Section 1617A.1.18 (which replaces ASCE 7-16, Section 13.1.4) or B) interior nonstructural wall partitions meeting criteria listed in exempt item 3 for "Welding" in the Appendix below |
| ☐ | 2. Concrete batch plant inspection is not required for items given in CBC Section 1705A.3.3.2 subject to the requirements and limitations in that section. |
| ☐ | 3. Non-bearing non-shear masonry walls may be exempt from certain DSA masonry testing and special inspection items as allowed per DSA IR 21-1. Refer to construction documents for specific exemptions accordingly for each applicable wall condition. |
| ☐ | 4. Epoxy shear dowels in site flatwork and/or other non-structural concrete. |



## Appendix: Work Exempt from DSA Requirements for Structural Tests / Special Inspections

| Application Number: | School Name: | School District: |
|---|---|---|
| 04-122029 | Accessible Ramp Landing Stair PC | SKC Company |
| DSA File Number: | Increment Number: | Date Created: |
| PC-116 | | 2023-02-20 13:43:59 |

| | CONCRETE/MASONRY: |
|---|---|
| ☐ | 5. Testing of reinforcing bars is not required for items given in CBC Section 1910A.2 subject to the requirements and limitations in that section. |

| | WELDING: |
|---|---|
| ☐ | 1. Solid-clad and open-mesh fences, gates with maximum leaf span of 10', and gates with a maximum rolling section of 10' all having an apex height less than 8'-0" above lowest adjacent grade. When located above circulation or occupied space below, these gates/fences are not located within 1.5x gate/fence height (max 8'-0") to the edge of floor or roof. |
| ☑ | 2. Handrails, guardrails, and modular or relocatable ramps associated with walking surfaces less than 30" above adjacent grade (excluding post base connections per the 'Exception' language in Section 1705A.2.1); fillet welds shall not be ground flush. |
| ☐ | 3. Non-structural interior cold-formed steel framing spanning less than 15'-0", such as in interior partitions, interior soffits, etc. supporting only self weight and light-weight finishes or adhered tile, masonry, stone, or terra cotta veneer no more than 5/8" thickness and apex less than 20'-0" in height and not over an exit way. Maximum tributary load to a member shall not exceed the equivalent of that occurring from a 10'x10' opening in a 15' tall wall for a header or king stud. |
| ☐ | 4. Manufactured support frames and curbs using hot rolled or cold-formed steel (i.e., light gauge) for mechanical, electrical, or plumbing equipment weighing less than 2000# (equipment only) (connections of such frames to superstructure elements using welding will require special inspection as noted in selected item(s) for Sections S/A3, S/A4 and/or S/A5 of listing above). |
| ☐ | 5. Manufactured components (e.g., Tolco, B-Line, Afcon, etc.) for mechanical, electrical, or plumbing hanger support and bracing (connections of such components to superstructure elements using welding will require special inspection as noted in selected item(s) for Sections S/A3, S/A4 and/or S/A5 of listing above). |
| ☐ | 6. TV Brackets, projector mounts with a valid listing (see DSA IR A-5) and recreational equipment (e.g., playground structures, basketball backstops, etc.) (connections of such elements to superstructure elements using welding will require special inspection as noted in selected item(s) for sections S/A3, S/A4 and/or S/A5 located in the Steel/Aluminum category of listing above). |
| ☐ | 7. Any support for exempt non-structural components given in CBC Section 1617A.1.18 (which replaces ASCE 7-16, Section 13.1.4) meeting the following: A) when supported on a floor/roof, <400# and resulting composite center of mass (including component's center of mass) ≤4' above supporting floor/roof, B) when hung from a wall or roof/floor, <20# for discrete units or <5 plf for distributed systems. |



## DSA 103-22: LISTING OF STRUCTURAL TESTS & SPECIAL INSPECTIONS(SIGNATURE), 2022 CBC

| Application Number: | School Name: | School District: |
|---|---|---|
| 04-122029 | Accessible Ramp Landing Stair PC | SKC Company |
| DSA File Number: | Increment Number: | Date Created: |
| PC-116 | | 2023-02-20 13:43:59 |

Name of Architect or Engineer in general responsible charge:

Name of Structural Engineer (When structural design has been delegated):

Signature of Architect or Structural Engineer: Date:

Note: To facilitate DSA electronic mark-ups and identification stamp application, DSA recommends against using secured electronic or digital signatures.

DSA STAMP



## DSA 103-22: LIST OF REQUIRED VERIFIED REPORTS, CBC 2022

| Application Number: | School Name: | School District: |
|---|---|---|
| 04-122029 | Accessible Ramp Landing Stair PC | SKC Company |
| DSA File Number: | Increment Number: | Date Created: |
| PC-116 | | 2023-02-20 13:43:59 |



THE SAMPLE DSA 103 FORMS SHOWN ON THIS SHEET ARE FOR ILLUSTRATION PURPOSES ONLY. A SEPARATE DSA 103 FORM IS TO BE COMPLETED FOR EACH PROJECT SPECIFIC APPLICATION THAT THIS PC IS BEING INCORPORATED INTO. THE DSA 103 FORM IS TO BE COMPLETED BY THE ARCHITECT OF RECORD FOR THE OVERALL SCOPE OF WORK ON THE PROJECT SPECIFIC APPLICATION. MODULAR BUILDING MANUFACTURER (OR DESIGN BUILD CONTRACTOR) IS ONLY RESPONSIBLE FOR COMPLETING DSA103 FORM ON STOCKPILE PROJECTS. THE SAMPLE DSA 103 FORM SHALL BE CROSSED OUT ON THIS DRAWING.

STATE AGENCY APPROVAL

SKC COMPANY
15345 FAIRFIELD RANCH RD - SUITE 160 CHINO HILLS, CA 91709
OFFICE: (909) 740-3120, FAX: (909) 726-9470
WEBSITE: WWW.SKCCOMPANY.COM
MANUFACTURER #IAP 1279666 DEALER # DL1279666
GC LIC # 992118 SBE CERTIFIED

ALL DESIGNS INDICATED ON THESE PLANS/DRAWINGS ARE PROPERTY OF SKC, INC AND ARE FOR THE USE BY SKC IN THE SPECIFIED JOB ONLY. THEY SHALL NOT BE USED AND/OR DUPLICATED OR TRANSMITTED IN ANY FORM, FOR ANY PURPOSE WITHOUT THE PRIOR WRITTEN CONSENT OF SKC, INC. ANY UNAUTHORIZED USE OF THESE PLANS SHALL SUBJECT THE OWNER OF SAID PROPERTY TO LIQUIDATED DAMAGES OF $75,000.00. THESE PLANS ARE PROTECTED UNDER THE PROVISIONS OF THE 1976 COPYRIGHT ACT COPYRIGHT SKC, © ALL RIGHTS RESERVED.

DISTRICT/CUSTOMER NAME:

SCHOOL/SITE NAME:

SHEET TITLE:

DSA 103
TEST & SPECIAL INSPECTIONS
SAMPLE

PRE-CHECK (PC) DOCUMENT
CODE: 2022 CBC
A SEPARATE PROJECT APPLICATION FOR CONSTRUCTION IS REQUIRED

APPROVED
DIV. OF THE STATE ARCHITECT
APP: 04-122029 PC
REVIEWED FOR
SS ☑ FLS ☑ ACS ☑ CG ☐
DATE: 09/27/2023

PROFESSIONAL OF RECORD ON PC

ORION
Structural Engineering, Inc.
11305 RANCHO BERNARDO RD
SUITE 121
SAN DIEGO CA, 92127
PHONE: (858) 679-1974
REGISTERED PROFESSIONAL ENGINEER
RAY L. ORR
EXP. 12/31/24
STRUCTURAL
STATE OF CALIFORNIA

FIRM: ORION STRUCTURAL ENGINEERING, INC.
ADDRESS: 11305 RANCHO BERNARDO ROAD, SUITE 121
CITY: SAN DIEGO, CA 92127
PHONE: (858) 679-1974

PROJECT SPECIFIC PROFESSIONAL OF RECORD

FIRM:
ADDRESS:
CITY:
PHONE:

REVISIONS

1 -
2 -
3 -
4 -
5 -

| | |
|---|---|
| PROJECT NO.: | 00-0000 |
| DRAFTER: | 00 |
| SCALE: | AS NOTED |
| DATE: | 00-00-00 |

SHEET NUMBER

R-2

9/26/2023 9:27:48 AM

# GENERAL NOTES

## GENERAL NOTES:

1. ALL CONSTRUCTION SHALL COMPLY WITH THE 2022 EDITION OF THE CALIFORNIA BUILDING CODE, CCR TITLE 24, PART 2 (CBC) AND CCR TITLE 24, PART 1, CHAPTER 4, GROUP 1, LATEST REVISIONS.
2. THE CONTRACTOR SHALL BE RESPONSIBLE FOR THE SAFETY OF THE BUILDING DURING CONSTRUCTION AND SHALL PROVIDE ADEQUATE SHORING AND BRACING DURING CONSTRUCTION. CONTRACTOR SHALL COMPLY WITH APPLICABLE SAFETY REGULATIONS
3. DETAILS NOT SPECIFICALLY SHOWN SHALL BE CALLED TO THE ATTENTION OF THE MANUFACTURER OR DESIGN PROFESSIONAL AND DSA.
4. THE CONTRACTOR SHALL COORDINATE THE WORK OF ALL TRADES AND SHALL CHECK ALL DIMENSIONS. ANY DISCREPANCIES SHALL BE CALLED TO THE ATTENTION OF THE OWNER AND BE RESOLVED BEFORE PROCEEDING WITH THE WORK.
5. NO STRUCTURAL MEMBERS SHALL BE CUT, NOTCHED OR OTHERWISE PENETRATED UNLESS SPECIFICALLY APPROVED BY THE STRUCTURAL ENGINEER IN ADVANCE OR SHOWN ON THESE DRAWINGS
6. TYPICAL DETAILS SHALL APPLY UNLESS SHOWN OTHERWISE ON THE DRAWINGS.
7. WHERE THESE GENERAL NOTES AND TYPICAL DETAILS ARE IN CONFLICT WITH THE CUSTOMER SPECIFICATIONS, THESE GENERAL NOTES AND TYPICAL DETAILS SHALL GOVERN.
8. NOT USED
9. REFER TO ARCHITECTURAL DRAWINGS FOR DIMENSIONS AND OTHER INFORMATION NOT SPECIFICALLY SHOWN ON STRUCTURAL DRAWINGS
10. ALL ELEVATIONS ARE REFERENCED FROM TOP OF FINISHED FIRST FLOOR ELEVATION = 0'-0"
11. NOT USED
12. NOT USED
13. DIMENSIONS AND ELEVATIONS SHOWN ARE APPROXIMATE AND ARE PROVIDED AS AN AID IN INTERPRETING THE DRAWINGS ONLY. DIMENSIONS AND ELEVATIONS MUST BE VERIFIED WITH ARCHITECTURAL DRAWINGS. IN THE EVENT OF CONFLICT, DIMENSIONS AND ELEVATIONS SHOWN ON ARCHITECTURAL DRAWINGS SHALL GOVERN. DRAWING SCALES GIVEN ARE APPROXIMATE - DO NOT SCALE PLANS OR DETAILS
14. NOT USED

## WOOD:

1. STRUCTURAL FRAMING SHALL BE HEM FIR GRADED IN ACCORDANCE WITH THE STANDARD GRADING RULES OF THE WESTERN WOOD PRODUCTS ASSOCIATION OR STANDARD GRADING RULES #17 OF THE WEST COAST LUMBER INSPECTION BUREAU, LATEST EDITIONS. GRADES SHALL BE AS FOLLOWS UNLESS NOTED OTHERWISE ON THE DRAWINGS. (HEM FIR NORTH IS NOT ALLOWED.) EACH PIECE SHALL BE GRADE MARKED AND NO PIECE MAY FALL BELOW GRADES INDICATED.
   ALL FRAMING EXCEPT AS NOTED HEM FIR #2
2. PLYWOOD SHALL BE AS SHOWN ON THESE DRAWINGS WITH EXTERIOR GLUE IN ACCORDANCE WITH U.S. PRODUCT STANDARD PS 1-19. ALL PANELS SHALL BE MARKED WITH AN APA GRADE MARK WITH AN IDENTIFICATION INDEX AS SHOWN ON DRAWINGS.
3. LAG SCREWS SHALL BE STEEL AND CONFORM TO ANSI/ASME STANDARD B18.2.1 AND THE REQUIREMENTS OF THE 2018 NATIONAL DESIGN SPECIFICATION FOR WOOD CONSTRUCTION (NDS). HOLES FOR LAG SCREW SHANKS SHALL BE BORED THE SAME DEPTH AND DIAMETER AS THE SHANK. THE REMAINING DEPTH OF PENETRATION OF THE SCREW SHALL BE BORED TO 70% OF THE SHANK DIAMETER. ONE QUARTER INCH (1/4") DIAMETER LAG SCREWS NEED NOT HAVE PRE-DRILLED HOLES IF IT CAN BE SHOWN THAT THE WOOD MEMBERS ARE NOT DAMAGED DURING INSTALLATION. PROVIDE FULL BODY DIAMETER LAG SCREWS WITH BENDING YIELD STRENGTHS PER THE 2018 NDS.
4. PROVIDE MALLEABLE IRON WASHERS OR EQUIVALENT CUT PLATE WASHERS (NOT LESS THAN A STANDARD CUT WASHER) UNDER NUTS AND BOLT OR LAG SCREW HEADS WHICH BEAR ON WOOD.
5. WOOD SCREWS SHALL CONFORM TO ANSI/ASME STANDARD B18.6.1 AND THE REQUIREMENTS OF THE 2018 NATIONAL DESIGN SPECIFICATION FOR WOOD CONSTRUCTION (NDS). GALVANIZED OR OTHER CORROSION RESISTANT COATING WHERE EXPOSED TO WEATHER OR USED IN FOUNDATIONS. SCREWS SHALL BE STEEL WITH CUT THREADS AND BENDING YIELD STRENGTHS NDS.
6. WOOD MEMBERS SHALL BE CUT OR NOTCHED ONLY AS SHOWN ON STRUCTURAL DRAWINGS.
7. WHEN REQUIRED NAILING TENDS TO SPLIT WOOD MEMBERS, NAIL HOLES SHALL BE PRE-BORED TO 3/4 OF THE NAIL DIAMETER.
8. STRUCTURAL NAILING SHALL BE WITH FULL HEAD COMMON NAILS PER ALL REQUIREMENTS OF THE 2018 NDS. NAILING NOT SPECIFICALLY INDICATED SHALL COMPLY WITH CCR TITLE 24, PART 2, TABLE 2304.10.2. ALL NAILS SHALL BE GALVANIZED OR OTHER CORROSION RESISTANT COATING WHERE EXPOSED TO WEATHER, IN FOUNDATIONS AND AS NOTED ON PLANS, PER THE REQUIREMENTS OF CCR TITLE 24, PART 2, WITH MINIMUM BENDING YIELDS PER THE 2018 NDS. (SEE NAIL EQUIVALENCE BELOW.)
9. NAIL EQUIVALENCE: (PROVIDE MINIMUM NAIL LENGTHS AS REQUIRED FOR SPECIFIED PENETRATION, TYP UNO) 6d EQUALS .113"Ø - PROVIDE 1.36" MIN POINT PENETRATION 8d EQUALS .131"Ø - PROVIDE *1.57" MIN POINT PENETRATION 10d EQUALS .148"Ø - PROVIDE *1.78" MIN POINT PENETRATION 16d EQUALS .162"Ø - PROVIDE *1.94" MIN POINT PENETRATION * 1 1/2" AT 2x MEMBERS
10. EXCEPT WHERE MORE STRINGENT CONSTRUCTION IS SHOWN ON THE DRAWINGS, WOOD CONSTRUCTION SHALL COMPLY WITH TITLE 24, PART 2, SECTION 2308, CONVENTIONAL LIGHT-FRAME CONSTRUCTION PROVISIONS, AS A MINIMUM
11. PRESSURE PRESERVATIVE TREATMENT SHALL BE PER SECTION 2303.1.9, CCR TITLE 24, PART 2. PROVIDE QUALITY MARK ON ALL TREATED FOUNDATION MEMBERS FROM AGENCY LISTED BY AN ACCREDITATION BODY THAT COMPLIES WITH THE REQUIREMENTS OF THE AMERICAN LUMBER STANDARDS TREATED WOOD PROGRAM. ALL FOUNDATION MEMBERS SHALL BE IDENTIFIED PER SECTION 2303.1.9.1. TREAT ALL CUT ENDS OF PRESSURE TREATED MEMBERS WITH AN APPROVED PRESERVATIVE. (WILLARD W/B COPPER GREEN 2% OR AN APPROVED EQUIVALENT).
12. MACHINE NAILING IS SUBJECT TO APPROVAL BY THE STRUCTURAL ENGINEER OR ARCHITECT AND THE DIVISION OF THE STATE ARCHITECT.
13. POWDER DRIVEN FASTENERS SHALL BE BY HILTI, INC, HILTI FASTENING SYSTEMS - OR EQUAL. INSTALL IN ACCORDANCE WITH DRAWINGS AND THE MANUFACTURER'S RECOMMENDATIONS AND ICC APPROVALS
14. FASTENERS FOR PRESSURE-PRESERVATIVE TREATED WOOD SHALL COMPLY WITH SECTION 2304.10.6 OF CBC
15. NAILS AND SPIKES USED IN WET OR EXTERIOR LOCATIONS SHALL COMPLY WITH SECTION 2304.10.2.1 OF CBC

## STRUCTURAL STEEL:

1. NOT USED
2. NOT USED
3. NOT USED
4. ALL WELDING SHALL BE IN ACCORDANCE WITH THE REQUIREMENTS OF THE CALIFORNIA BUILDING CODE (CBC) AND THE STRUCTURAL WELDING CODE - STEEL, AWS D1.1, 2015 EDITION OF THE AMERICAN WELDING SOCIETY. WELDING DONE BY SHIELDING ELECTRIC-ARC OR FLUX-CORED PROCESS COMPLYING WITH AWS.
5. FABRICATION AND ERECTION OF STRUCTURAL AND MISCELLANEOUS STEEL SHALL BE IN ACCORDANCE WITH THE REQUIREMENTS OF THE 2016 EDITION OF THE SPECIFICATION FOR STRUCTURAL STEEL BUILDINGS OF THE AMERICAN INSTITUTE OF STEEL CONSTRUCTION (AISC) (CBC CHAPTER 22A). ALSO COMPLY WITH REQUIREMENTS OF THE AISC CODE OF STANDARD PRACTICE FOR STEEL BUILDINGS AND BRIDGES. TEMPORARY BRACING IS REQUIRED AS NEEDED UNTIL ALL ELEMENTS SHOWN ON STRUCTURAL DRAWINGS ARE IN PLACE.
6. PRIME ALL STEEL SURFACES WITH AN APPROVED PRIMER, EXCEPT SURFACES TO BE EMBEDDED IN CONCRETE AND SURFACES TO RECEIVE FIELD WELDS. TOUCH-UP FIELD WELDS AND OTHER EXPOSED STEEL SURFACES AFTER ERECTION. ALTERNATE: PROVIDE GALVANIZED PER ASTM A-123.
7. N/A
8. QUALIFIED AND CERTIFIED WELDERS SHALL BE USED FOR ALL WELDING. ALL WELDING TO CONFORM TO THE 2015 EDITION OF THE AMERICAN WELDING SOCIETY STRUCTURAL WEDLING CODE AWS D1.1
9. MATERIALS:

| | |
|---|---|
| ANGLES, MISC STEEL | ASTM A36 |
| PLATES | ASTM A-572 GRADE 50 |
| WELDING ELECTRODES | AWS STRUCTURAL STEEL E70XX, |
| TYPICAL STEEL CONNECTION BOLTS | ASTM A307 GRADE A |
| RUSH-INHIBITING PRIMER | TT-P-645 |
| RECTANGULAR HSS MEMBERS | ASTM A-500 GRADE B (Fy = 46 KSI) |

10. CONNECTED MEMBERS SHALL BEAR ONLY UPON UNTHREADED PORTIONS OF BOLTS
11. BURNING OF HOLES IS NOT ALLOWED
12. NOT USED
13. THE STRUCTURAL STEEL FABRICATOR SHALL SUBMIT SHOP DRAWINGS TO THE ENGINEER FOR APPROVAL PRIOR TO FABRICATION
14. BOLT HOLES SHALL BE 1/16" LARGER IN DIAMETER THAN NOMINAL SIZE OF BOLTS USED, UNO

## ACCEPTABLE FASTENERS:

| | |
|---|---|
| SELF-TAPPING SCREWS | SECT 3.2.12 ASTM C1513 |
| SELF-DRILLING SCREWS | SECT 3.2.9 ASTM C1513 |
| SELF-PIERCING SCREWS | SECT 3.2.9 ASTM C1513 |

REFERENCE ASTM C1513, STANDARD SPECIFICATION FOR TAPPING SCREWS FOR COLD-FORMED STEEL FRAMING CONNECTION

REFERENCE AISI S400-20 , NORTH AMERICAN STANDARD FOR SEISMIC DESIGN

FASTENERS MANUFACTURED WITH CARBON STEEL WIRE SHALL CONFORM TO ASTM A510

TESTING - THE OPERATOR, TOOL, AND FASTENER SHALL BE PRE-QUALIFIED BY THE PROJECT INSPECTOR. HE SHALL OBSERVE THE TESTING OF THE FIRST 10 FASTENER INSTALLATIONS. A TEST "PULL-OUT" LOAD OF NOT LESS THAN TWICE THE DESIGN LOAD SHALL BE APPLIED TO THE PIN IN SUCH A MANNER AS NOT TO RESIST THE SPALLING TENDENCY OF THE CONCRETE SURROUNDING THE PIN. THEREAFTER, RANDOM TEST UNDER THE PROJECT INSPECTOR'S SUPERVISION SHALL BE MADE OF APPROXIMATELY 1 IN 10 PINS. IF ANY PIN FAILS TESTING, TEST ALL PINS OF THE SAME CATEGORY NOT PREVIOUSLY TESTED UNTIL TWENTY (20) CONSECUTIVE PASS, THEN RESUME THE INITIAL TESTING FREQUENCY.

## COLD FORMED STRUCTURAL STEEL:

1. NOT USED
2. NOT USED
3. CORROSION PROTECT PER TABLE A4-1 BELOW
4. GALVANIZED COATINGS MUST MEET ASTM A-525 SPECIFICATIONS
5. CARBON SHEET STEEL MUST MEET THE MINIMUM REQUIREMENTS OF ASTM A-1011 SS GRADE 55 & 33 GRADE 55 KSI FOR 10, 12, 14, AND 16 GAUGE AND GRADE 33 KSI FOR 18 GAUGE AND LIGHT MEMBERS UON. CARBON SHEET STEEL PRODUCTS MUST BE THOROUGHLY COATED WITH A RUST INHIBITIVE PAINT.
6. ALL STRUCTURAL MEMBERS SHALL BE DESIGNED IN ACCORDANCE WITH AMERICAN IRON AND STEEL INSTITUTE (AISI) NORTH AMERICAN SPECIFICATION FOR THE DESIGN OF COLD-FORMED STRUCTURAL STEEL MEMBERS LATEST ADOPTED EDITION AISI S100-16 (2020) W/S2-20.
7. NOT USED
8. NOT USED
9. FASTENINGS OF COMPONENTS SHALL BE WITH SELF-DRILLINGS SCREWS OR WELDING. SCREWS OR WELDS SHALL BE SUFFICIENT SIZE TO INSURE THE STRENGTH OF THE CONNECTION. ALL WELDS OF GALVANIZED STEEL SHALL BE TOUCHED UP WITH ZINC-RICH PAINT. ALL WELDS OF CARBON SHEET STEEL SHALL BE TOUCHED UP WITH PAINT
10. NOT USED
11. PROVIDE SHOP DRAWINGS INDICATING MEMBERS GAUGES, SHAPES, SIZES, SPACING, LOCATIONS AND CONNECTIONS
12. STUDS SHALL BE INSTALLED WITH THEIR BEARING ENDS POSITIONED FLUSH AGAINST THE INSIDE TRACK WEB.
13. NOT USED
14. NOT USED
15. N/A
16. NOT USED
17. ALL SHEET METAL SCREWS SHALL BE THREAD FORMING OR THREAD CUTTING, WITH OR WITHOUT A SELF-DRILLING POINT PER AISI
18. ALL WELDING OR MATERIAL LESS THAN 0.18 INCHES IN THICKNESS SHALL BE MADE IN ACCORDANCE WITH THE AWS D1.3 WELDERS AND WELDING PROCEDURES AND SHALL BE QUALIFIED AS SPECIFIED IN AWS D1.3
19. TOUCH UP COLD GALVANIZING USING ZRC CHEMICAL PRODUCTS CO.M, ZRC COLD GALVANIZING COMPOUND OR EQUAL
20. SPLICES IN STUDS SHALL NOT BE PERMITTED

## CORROSION PROTECTION:

1. STRUCTURAL MEMBERS UTILIZED IN COLD-FORMED STEEL FRAMED CONSTRUCTION SHALL HAVE A PROTECTIVE COATING AS SPECIFIED IN TABLE A4-1

TABLE A4-1
COATING DESIGNATIONS

| COATING CLASSIFICATION | COATING DESIGNATOR | MINIMUM COATING REQUIREMENTS | | | |
|---|---|---|---|---|---|
| | | ZINC COATED[A] $OZ/FT^2$ $(G/M^2)$ | ZINC IRON[B] $OZ/FT^2$ $(G/M^2)$ | 55% AL-ZINC[C] $OZ/FT^2$ $(G/M^2)$ | ZINCE-5%[D] $OZ/FT^2$ $(G/M^2)$ |
| METALLIC COATED | CP 60 | G60 [Z180] | A60 [F180] | AZ50 [AZM1850] | CF30 [ZGF90] |
| | CP 90 | G90 [Z275] | NOT APPLICABLE | AZ50 [AZM1850] | CF45 [ZGF135] |
| PAINTED METALLIC | PM | THE METALLIC COATED SUBSTRATE SHALL MEET THE REQUIREMENTS OF METALLIC COATED. IN ADDITION, THE PAINT FILM SHALL HAVE A MINIMUM THICKNESS OF 0.5 MIL PER SIDE (PRIMER PLUS TOPCOAT) WITH A MINIMUM PRIMER THICKNESS OF 0.1 MIL PER SIDE | | | |

A ZINC-COATED STEEL SHEET AS DESCRIBED IN ASTM A653/A653M
B ZINC-IRON ALLOY-COATED STEEL SHEET AS DESCRIBED IN ASTM A653/A653M
C 55% ALUMINUM-ZINCE ALLOY COATED STEEL SHEET AS DESCRIBED IN ASTM A792/A792M
D ZINCE-5% ALUMINUM ALLOY-COAED STEEL SHEET AS DESCRIBED IN ASTM A875/A875M
E IN ACCORDANCE WITH THE REQUIREMENTS OF ASTM A1003/A1003M

2. ADDITIONAL CORROSION PROTECTION SHALL NOT BE REQUIRED ON EDGES OF METALLIC-COATED STEEL FRAMING MEMBERS, SHOP OR FIELD CUT, PUNCHED OR DRILLED

3. UNLESS ADDITIONAL CORROSION PROTECTION IS PROVIDED, FRAMING MEMBERS SHALL BE LOCATED WITHIN THE BUILDING ENVELOPE AND SHIELDED FROM DIRECT CONTACT WITH MOISTURE FROM THE GROUND OR THE OUTDOOR CLIMATE

# ACCESS NOTES

1. RAMPS HAVING SLOPES STEEPER THAN 1 VERTICAL TO 20 HORIZONTAL SHALL HAVE LANDINGS AT TOP AND BOTTOM AND AT LEAST ONE INTERMEDIATE LANDING SHALL BE PROVIDED FOR EACH 30" RISE OF RISE PER CBC 11B-405.7

2. LOCATION OF LANDINGS - LANDINGS SHALL BE PROVIDED AT THE TOP AND BOTTOM OF EACH RAMP. INTERMEDIATE LANDINGS SHALL BE PROVIDED A INTERVALS NOT EXCEEDING 30" OF VERTICAL RISE AND AT EACH CHANGE OF DIRECTION. LANDINGS ARE NOT CONSIDERED IN DETERMINING THE MAXIMUM HORIZONTAL DISTANCE OF EACH RAMP

   EXAMPLES OF RAMP DIMENSIONS:

| SLOPE: | MAX RISE (INCHES): | MAX HORIZONTAL PROJECTION: |
|---|---|---|
| 1:12 | 30 | 30'-0" |
| 1:15 | 30 | 37'-6" |
| 1:16 | 30 | 40'-0" |

   SIZE OF LANDINGS SHALL NOT BE LESS THAN 60" WIDE AND SHALL HAVE A LENGTH OF NOT LESS THAN 60" IN THE DIRECTION OF THE RAMP RUN PER CBC 11B-405.7.2 & 11B-405.7.3. AT THE BOTTOM LANDING OR LANDING AT CHANGE OF RAMP DIRECTION, THE LANDING SHALL SLOPE 1:48 MAX AND EXTEND MIN 72" IN THE DIRECTION OF THE RAMP

3. DOORS IN ANY POSITION SHALL NOT BE REDUCE THE MINIMUM DIMENSIONS OF THE LANDING TO LESS THAN 42" AND SHALL NOT REDUCE THE REQUIRED WIDTH BY MORE THAN 3" WHEN FULLY OPENED PER CBC 11B-405.7.5

4. RAMPS SHALL BE CONSTRUCTED AS REQUIRED. ALL REQUIREMENTS SHALL CONFORM TO CBC 11B-405

5. THE SURFACE OF RAMPS, LANDING & STAIRS SHALL BE ROUGHED OR SHALL BE OF SLIP-RESISTANT MATERIAL WITH A COEFFICIENT OF FRICTION OF 0.6 FOR LANDINGS AND 0.8 FOR RAMP AND STAIRS

6. RAMPS AND STAIRWAY USED AS THE EXIT REQUIRED WIDTH SHALL CONFORM TO CBC SECTION 1009, 1010, CHAPTER 11B & 11B-405.5

7. HANDRAILS SHALL CONFORM TO CBC SECTION 11B-405.8 (RAMPS) AND 11B-504.6 (STAIRS)

8. STRIKE EDGE EXTENSION THE WIDTH OF THE LANDING SHALL EXTEND 24" PAST THE STRIKE EDGE OF ANY DOOR OR GATE FOR EXTERIOR RAMPS AND 18" PAST THE STRIKE EDGE FOR INTERIOR RAMPS. FOR DOOR SWINGING INTO LANDING, 42" MIN IS REQUIRED PER 11B-405.7.5

9. CHANGE IN DIRECTION - RAMPS THAT CHANGE DIRECTION BETWEEN RUNS AT LANDING SHALL HAVE A CLEAR LANDING 60" MINIMUM BY 72" MINIMUM IN THE DOWNWARD DIRECTION OF TRAVEL PER CBC 11B-405.7.4 AND 72" MIN REQUIRED AT THE BOTTOM LANDING

10. THE WIDTH OF RAMPS SHALL HAVE A MINIMUM WIDTH OF 48" OR AS WIDE AS REQUIRED EXIT WIDTH IF LARGER REQUIRED PER STAIRWAY AND EXITS PER CBC 11B-405.5

11. LANDINGS AND RAMPS SHALL BE SLOPED AT 1:48 MAX TO PREVENT THE ACCUMULATION OF WATER ON WALKING SURFACES PER CBC 11B-405.10. SEE CBC 11B-504.7 FOR STAIRS

12. SITE CONDITION: DUE TO VARIES SITE CONDITIONS, THE MAXIMUM HEIGHT OF FINISH FLOOR FROM GRADE IS 26". THEREFORE IT IS POSSIBLE THAT THE ACCESS RAMP ATTACHED TO THE COMMON LANDING COULD BE 26'-0". AT A SLOPE OF 1:12, THE ARCHITECT MUST TAKE INTO ACCOUNT THAT THE RAMP SUPPLIED BY SKC COMPANY IS 11'-0". AT A SLOPE OF 1:12 THE ARCHITECT WILL HAVE TO DESIGN AND PROVIDE SUFFICIENT DETAILS OF RAMP EXTENSIONS AND BOTTOM LANDING DEPENDING ON PARTICULAR SITE CONDITIONS ICS WILL NOT BE RESPONSIBLE FOR ANY RAMP EXTENSION EXCEEDING ORIGINAL PLAN AS SHOWN ON PLANS

STATE AGENCY APPROVAL


SKC COMPANY
15345 FAIRFIELD RANCH RD - SUITE 160 CHINO HILLS, CA 91709
OFFICE: (909) 740-3120, FAX: (909) 726-9470
WEBSITE: WWW.SKCCOMPANY.COM
MANUFACTURER #MF1279666 DEALER # DL1279666
GC LIC # 992118 SBE CERTIFIED



ALL DESIGNS INDICATED ON THESE PLANS/DRAWINGS ARE PROPERTY OF SKC, INC AND ARE FOR THE USE BY SKC IN THE SPECIFIED JOB ONLY. THEY SHALL NOT BE USED AND/OR DUPLICATED OR TRANSMITTED IN ANY FORM, FOR ANY PURPOSE WITHOUT THE PRIOR WRITTEN CONSENT OF SKC, INC. ANY UNAUTHORIZED USE OF THESE PLANS SHALL SUBJECT THE OWNER OF SAID PROPERTY TO LIQUIDATED DAMAGES OF $75,000.00. THESE PLANS ARE PROTECTED UNDER THE PROVISIONS OF THE 1976 COPYRIGHT ACT COPYRIGHT SKC, © ALL RIGHTS RESERVED.


DISTRICT/CUSTOMER NAME:

SCHOOL/SITE NAME:

SHEET TITLE:

CONSTRUCTION SPECIFICATIONS AND NOTES

PRE-CHECK (PC) DOCUMENT
CODE: 2022 CBC
A SEPARATE PROJECT APPLICATION FOR CONSTRUCTION IS REQUIRED

APPROVED
DIV. OF THE STATE ARCHITECT
APP: 04-122029 PC
REVIEWED FOR
SS ☑ FLS ☑ ACS ☑ CG ☐
DATE: 09/27/2023

PROFESSIONAL OF RECORD ON PC


ORION
Structural Engineering, Inc.
11305 RANCHO BERNARDO RD
SUITE 121
SAN DIEGO CA. 92127
PHONE (858) 679-1974

REGISTERED PROFESSIONAL ENGINEER
RYAN J. OVER
No. S 4437
EXP. 12/31/24
STRUCTURAL
STATE OF CALIFORNIA

FIRM: ORION STRUCTURAL ENGINEERING, INC.
ADDRESS: 11305 RANCHO BERNARDO ROAD, SUITE 121
CITY: SAN DIEGO, CA 92127
PHONE: (858) 679-1974


PROJECT SPECIFIC PROFESSIONAL OF RECORD

FIRM:
ADDRESS:
CITY:
PHONE:

REVISIONS

| | |
|---|---|
| 1 | - |
| 2 | - |
| 3 | - |
| 4 | - |
| 5 | - |

| | |
|---|---|
| PROJECT NO.: | 00-0000 |
| DRAFTER: | 00 |
| SCALE: | AS NOTED |
| DATE: | 00-00-00 |

SHEET NUMBER

R-3

9/26/2023 9:28:02 AM

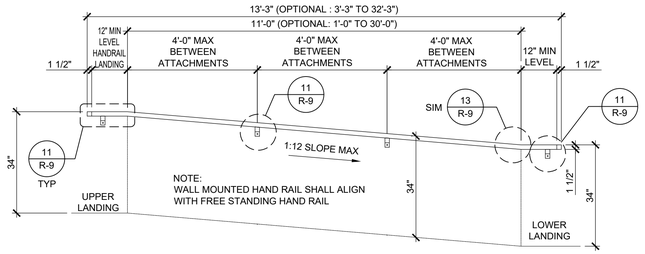


NOTE(*):
ALL HAND RAILS SURFACES SHALL BE SMOOTH WITH NO SHARP CORNER, PER CBC 11B-505.8 WALL TO BE SMOOTH AND TO EXTEND 18" ABOVE HANDRAIL.

ATTACHED TO BUILDING MEMBER BY OTHERS.

## HANDRAIL ATTACHMENT TO BUILDING

SCALE: 1/2" = 1'-0"

6

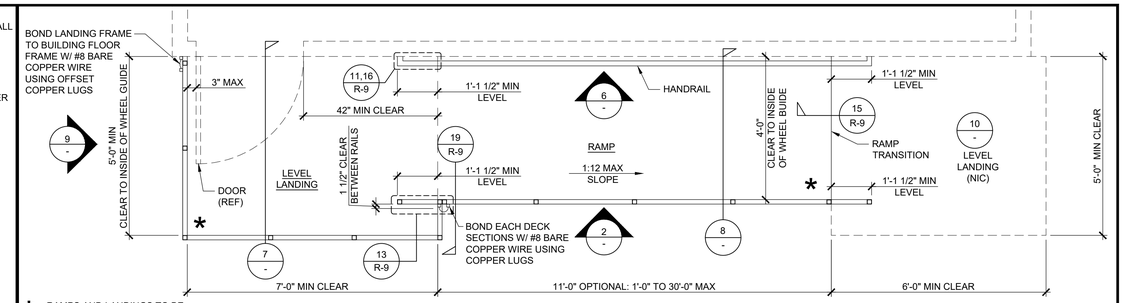


* RAMPS AND LANDINGS TO BE SLOPED SO AS NOT TO RETAIN STANDING WATER,1:48 (2.083%) MAX SLOPE

## RAMP AND LANDING AT BUILDING

SCALE: 1/2" = 1'-0"

1

11

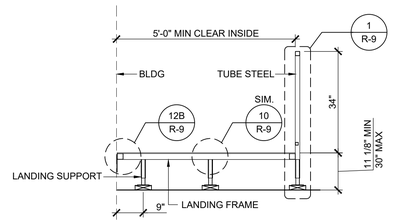


## SECTION AT LANDING

SCALE: 1/2" = 1'-0"

7

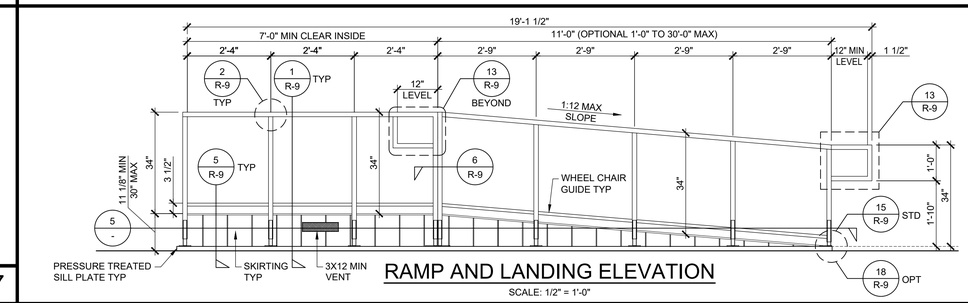


## RAMP AND LANDING ELEVATION

SCALE: 1/2" = 1'-0"

2

NOTE(*):
ALL HAND RAILS SURFACES SHALL BE SMOOTH WITH NO SHARP CORNER, PER CBC 11B-505.8 WALL TO BE SMOOTH AND TO EXTEND 8" ABOVE HANDRAIL

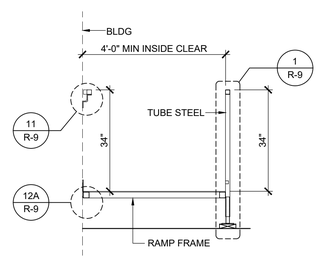


## SECTION AT RAMP

SCALE: 1/2" = 1'-0"

8

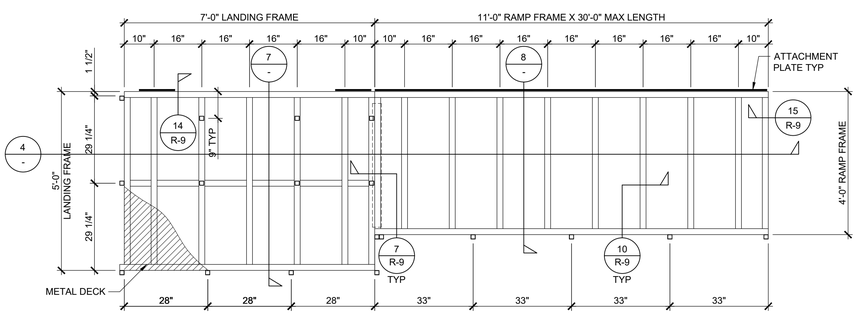


NOTE:
PER CBC 1012.5.1 MINIMUM EGRESS WIDTH SHALL COMPLY WITH CBC 1020.3 (CORRIDORS)

1020.3
THE MIN WIDTH OF CORRIDORS SPECIFIED IN TABLE 1020.3 SHALL BE DETERMINED BY SECTION 1005.3, PER OCCUPANT. HOWEVER FOR GROUP E IF THERE ARE 100 OR MORE OCCUPANTS REQ'D TO EXIT THE RAMP SHALL BE 72" MIN WIDTH. THIS WILL REQUIRE A NEW DESIGN.

## RAMP AND LANDING FRAMING PLAN

SCALE: 1/2" = 1'-0"

3

12

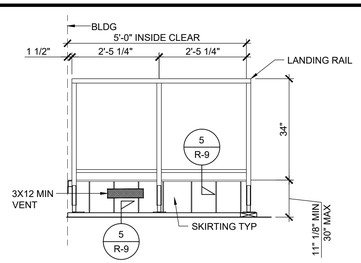


## LANDING ELEVATION (REAR)

SCALE: 1/2" = 1'-0"

9

13

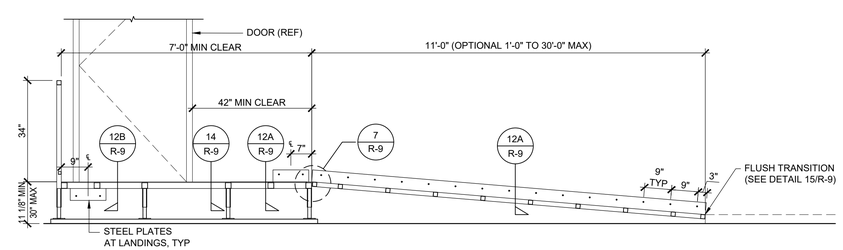


## SECTION AT RAMP AND LANDING

SCALE: 1/2" = 1'-0"

4

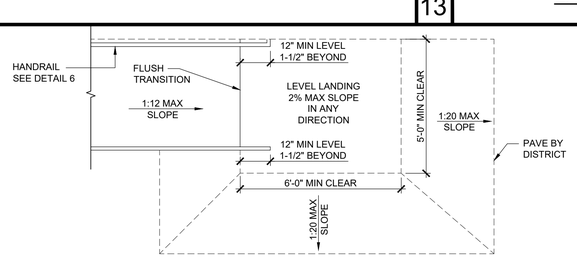


NOTE:
1. 1:20 TRANSITIONS OFF OF LOWER LANDING REQUIRES NO HANDRAILS.
2. TRANSITIONS EXCEEDING 1:20 BUT NOT TO EXCEED 1:12 REQUIRE REMOVAL OF 12" HANDRAIL EXTENSION AND ADDITIONAL HANDRAILING ALSO REQUIRES ADDITIONAL RAMP LENGTH BY DISTRICT. (THIS CONDITION REQUIRES A SITE SPECIFIC DETAIL PROVIDED BY ARCHITECT TO DEMONSTRATE ACCESSIBLE RAMP.)

* RAMPS AND LANDINGS TO BE SLOPED SO AS NOT TO RETAIN STANDING WATER,1:48 (2.083%) MAX SLOPE.

## CLEAR LANDING SPACE

SCALE: 3/8" = 1'-0"

10

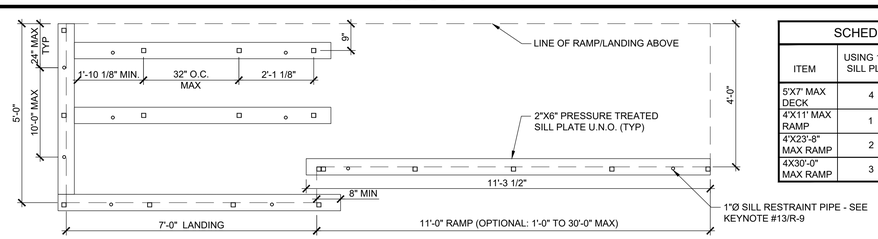


| SCHEDULE | | |
|---|---|---|
| ITEM | USING 12 FT SILL PLATE | MIN QTY OF PIPES |
| 5'X7' MAX DECK | 4 | 8 |
| 4'X11' MAX RAMP | 1 | 2 |
| 4'X23'-8" MAX RAMP | 2 | 4 |
| 4'X30'-0" MAX RAMP | 3 | 6 |

## SILL PLAN FOR RAMP AND LANDING

SCALE: 1/2" = 1'-0"

5

STATE AGENCY APPROVAL


SKC COMPANY
15345 FAIRFIELD RANCH RD - SUITE 160 CHINO HILLS, CA 91709
OFFICE: (909) 740-3120, FAX: (909) 726-9470
WEBSITE: WWW.SKCCOMPANY.COM
MANUFACTURER #MF1279666 DEALER # DL1279666
GC LIC # 992118 SBE CERTIFIED



ALL DESIGNS INDICATED ON THESE PLANS/DRAWINGS ARE PROPERTY OF SKC, INC AND ARE FOR THE USE BY SKC IN THE SPECIFIED JOB ONLY. THEY SHALL NOT BE USED AND/OR DUPLICATED OR TRANSMITTED IN ANY FORM, FOR ANY PURPOSE WITHOUT THE PRIOR WRITTEN CONSENT OF SKC, INC. ANY UNAUTHORIZED USE OF THESE PLANS SHALL SUBJECT THE OWNER OF SAID PROPERTY TO LIQUIDATED DAMAGES OF $75,000.00. THESE PLANS ARE PROTECTED UNDER THE PROVISIONS OF THE 1976 COPYRIGHT ACT COPYRIGHT SKC, © ALL RIGHTS RESERVED.


DISTRICT/CUSTOMER NAME:

SCHOOL/SITE NAME:

SHEET TITLE:

STANDARD RAMP & LANDING (ATTACHED HANDRAIL TO BUILDING)

PRE-CHECK (PC) DOCUMENT
CODE: 2022 CBC
A SEPARATE PROJECT APPLICATION FOR CONSTRUCTION IS REQUIRED

APPROVED
DIV. OF THE STATE ARCHITECT
APP: 04-122029 PC
REVIEWED FOR
SS ☑ FLS ☑ ACS ☑ CG ☐
DATE: 09/27/2023

PROFESSIONAL OF RECORD ON PC


ORION
STRUCTURAL ENGINEERING, INC.
11305 RANCHO BERNARDO RD
SUITE 121
SAN DIEGO CA, 92127
PHONE (858) 679-1974
REGISTERED PROFESSIONAL ENGINEER
RYAN J. ORR
No. 27427
EXP. 12/31/24
STRUCTURAL
STATE OF CALIFORNIA
FIRM: ORION STRUCTURAL ENGINEERING, INC.
ADDRESS: 11305 RANCHO BERNARDO ROAD, SUITE 121
CITY: SAN DIEGO, CA 92127
PHONE: (858) 679-1974


PROJECT SPECIFIC PROFESSIONAL OF RECORD

FIRM:
ADDRESS:
CITY:
PHONE:

REVISIONS

1 -
2 -
3 -
4 -
5 -

PROJECT NO.: 00-0000
DRAFTER: 00
SCALE: AS NOTED
DATE: 00-00-00

SHEET NUMBER

R-4

9/26/2023 9:28:19 AM

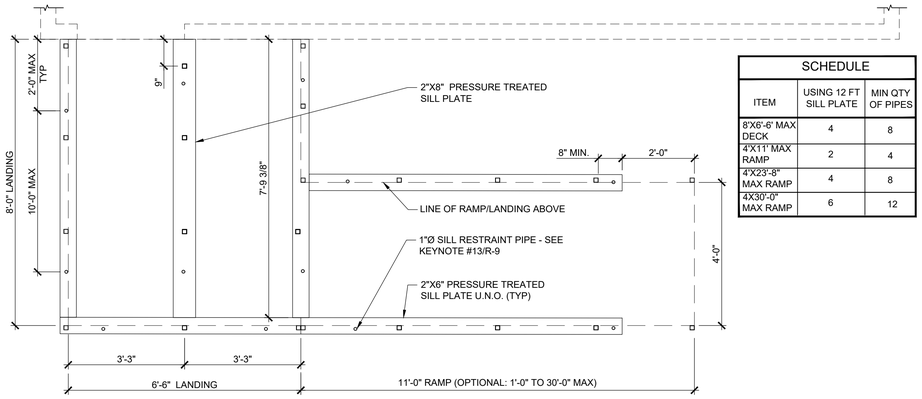


| SCHEDULE | | |
|---|---|---|
| ITEM | USING 12 FT SILL PLATE | MIN QTY OF PIPES |
| 8'X6'-6' MAX DECK | 4 | 8 |
| 4'X11' MAX RAMP | 2 | 4 |
| 4'X23'-8" MAX RAMP | 4 | 8 |
| 4'X30'-0" MAX RAMP | 6 | 12 |

## SILL PLAN FOR RAMP AND LANDING

SCALE: 1/2" = 1'-0"

5

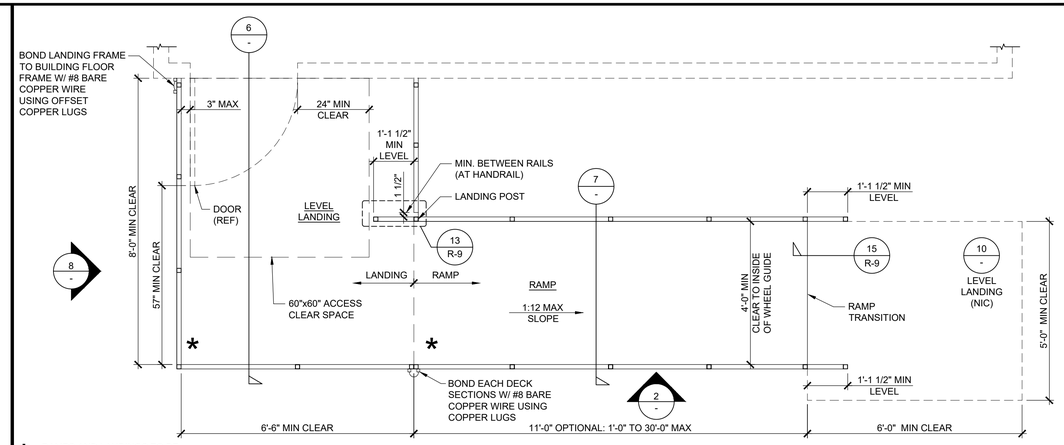


* RAMPS AND LANDINGS TO BE SLOPED SO AS NOT TO RETAIN STANDING WATER,1:48 (2.083%) MAX SLOPE

## RAMP AND LANDING AT BUILDING

SCALE: 1/2" = 1'-0"

1

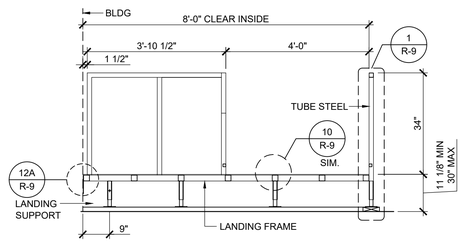


## SECTION AT LANDING

SCALE: 1/2" = 1'-0"

6

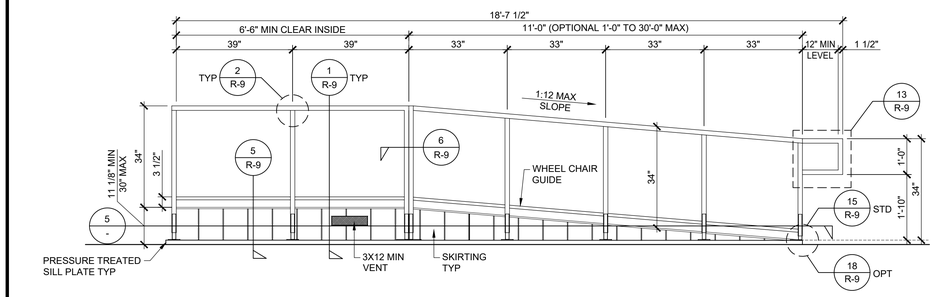


## RAMP AND LANDING ELEVATION

SCALE: 1/2" = 1'-0"

3

9

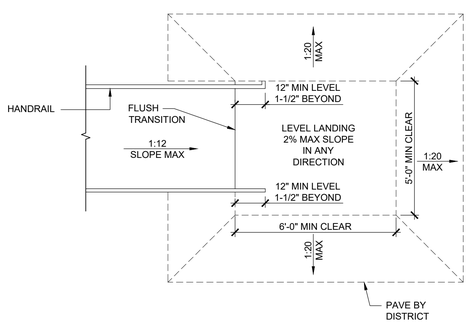


NOTE:
1. 1:20 TRANSITIONS OFF OF LOWER LANDING REQUIRES NO HANDRAILS.
2. TRANSITIONS EXCEEDING 1:20 BUT NOT TO EXCEED 1:12 REQUIRE REMOVAL OF 12" HANDRAIL EXTENSION AND ADDITIONAL HANDRAILING ALSO REQUIRES ADDITIONAL RAMP LENGTH BY DISTRICT. (THIS CONDITION REQUIRES A SITE SPECIFIC DETAIL PROVIDED BY ARCHITECT TO DEMONSTRATE ACCESSIBLE RAMP.)

* RAMPS AND LANDINGS TO BE SLOPED SO AS NOT TO RETAIL STANDING WATER,1:48 (2.083%) MAX SLOPE.

## CLEAR LANDING SPACE

SCALE: 3/8" = 1'-0"

10

NOTE(*):
ALL HAND RAILS SURFACES SHALL BE SMOOTH WITH NO SHARP CORNER, PER CBC 11B-505.8 WALL TO BE SMOOTH AND TO EXTEND 8" ABOVE HANDRAIL

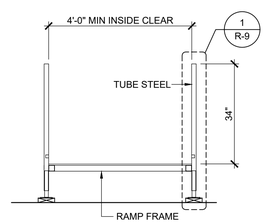


## SECTION AT RAMP

SCALE: 1/2" = 1'-0"

7

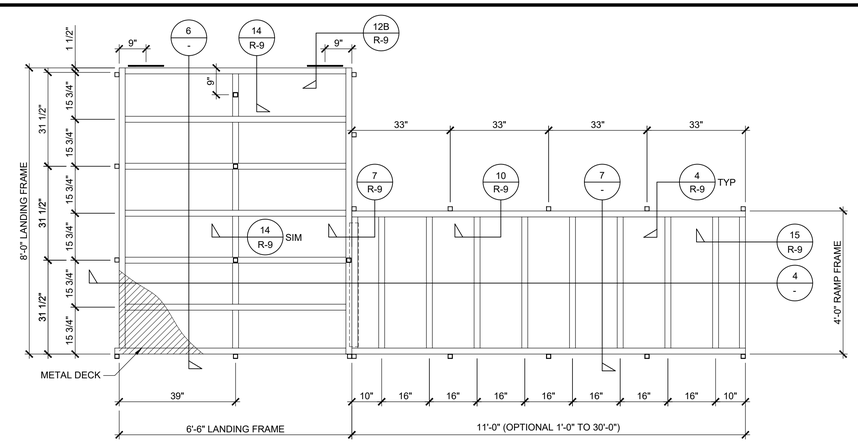


NOTE:
PER CBC 1012.5.1 MINIMUM EGRESS WIDTH SHALL COMPLY WITH CBC 1020.3 (CORRIDORS)

1020.3
THE MIN WIDTH OF CORRIDORS SPECIFIED IN TABLE 1020.3 SHALL BE DETERMINED BY SECTION 1005.3, PER OCCUPANT. HOWEVER FOR GROUP E IF THERE ARE 100 OR MORE OCCUPANTS REQ'D TO EXIT THE RAMP SHALL BE 72" MIN WIDTH. THIS WILL REQUIRE A NEW DESIGN.

## RAMP AND LANDING FRAMING PLAN

SCALE: 1/2" = 1'-0"

2

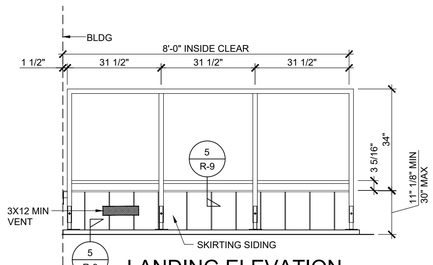


## LANDING ELEVATION

SCALE: 1/2" = 1'-0"

8

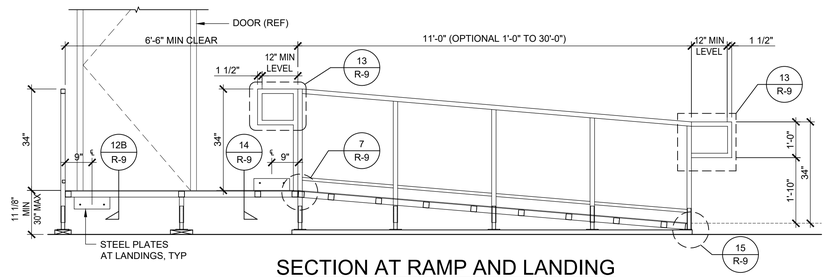


## SECTION AT RAMP AND LANDING

SCALE: 1/2" = 1'-0"

4

STATE AGENCY APPROVAL


SKC COMPANY
15345 FAIRFIELD RANCH RD - SUITE 160 CHINO HILLS, CA 91709
OFFICE: (909) 740-3120, FAX: (909) 726-9470
WEBSITE: WWW.SKCCOMPANY.COM
MANUFACTURER #MP 1279666 DEALER # DL 1279666
GC LIC # 992118 SBE CERTIFIED



ALL DESIGNS INDICATED ON THESE PLANS/DRAWINGS ARE PROPERTY OF SKC, INC AND ARE FOR THE USE BY SKC IN THE SPECIFIED JOB ONLY. THEY SHALL NOT BE USED AND/OR DUPLICATED OR TRANSMITTED IN ANY FORM, FOR ANY PURPOSE WITHOUT THE PRIOR WRITTEN CONSENT OF SKC, INC. ANY UNAUTHORIZED USE OF THESE PLANS SHALL SUBJECT THE OWNER OF SAID PROPERTY TO LIQUIDATED DAMAGES OF $75,000.00. THESE PLANS ARE PROTECTED UNDER THE PROVISIONS OF THE 1976 COPYRIGHT ACT COPYRIGHT SKC, © ALL RIGHTS RESERVED.


DISTRICT/CUSTOMER NAME:

SCHOOL/SITE NAME:

SHEET TITLE:

OFFSET RAMP & LANDING
(FREE STANDING HANDRAILS)

PRE-CHECK (PC) DOCUMENT
CODE: 2022 CBC
A SEPARATE PROJECT APPLICATION FOR CONSTRUCTION IS REQUIRED

APPROVED
DIV. OF THE STATE ARCHITECT
APP: 04-122029 PC
REVIEWED FOR
SS ☑ FLS ☑ ACS ☑ CG ☐
DATE: 09/27/2023

PROFESSIONAL OF RECORD ON PC


ORION
Structural Engineering, Inc.
11305 RANCHO BERNARDO RD
SUITE 121
SAN DIEGO CA, 92127
PHONE: (858) 679-1974
REGISTERED PROFESSIONAL ENGINEER
ADAM J. OSBORN
C 037
EXP. 12/31/24
STRUCTURAL
STATE OF CALIFORNIA

FIRM: ORION STRUCTURAL ENGINEERING, INC.
ADDRESS: 11305 RANCHO BERNARDO ROAD, SUITE 121
CITY: SAN DIEGO, CA 92127
PHONE: (858) 679-1974


PROJECT SPECIFIC PROFESSIONAL OF RECORD

FIRM:
ADDRESS:
CITY:
PHONE:

REVISIONS

1 -
2 -
3 -
4 -
5 -

| | |
|---|---|
| PROJECT NO.: | 00-0000 |
| DRAFTER: | 00 |
| SCALE: | AS NOTED |
| DATE: | 00-00-00 |

SHEET NUMBER

R-5

9/26/2023 9:28:34 AM

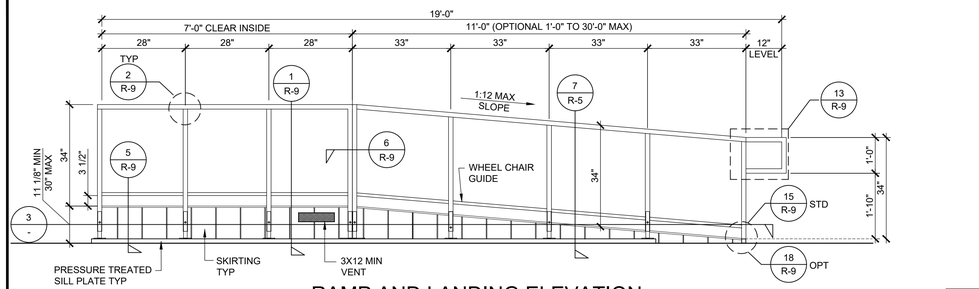


## RAMP AND LANDING ELEVATION

SCALE: 1/2" = 1'-0"

4

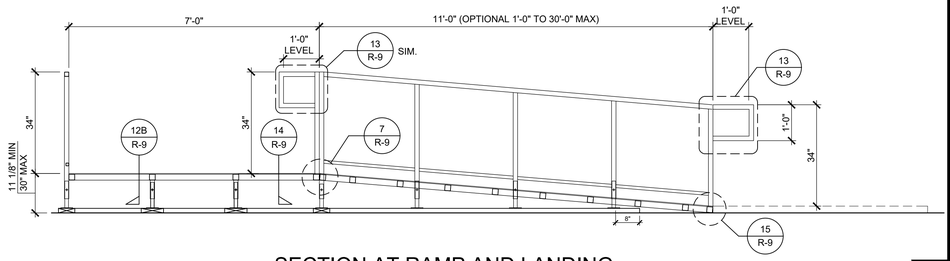


## SECTION AT RAMP AND LANDING

SCALE: 1/2" = 1'-0"

5

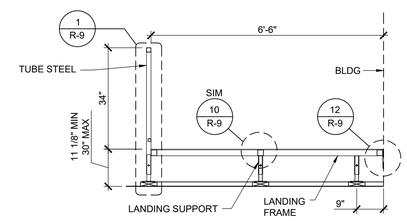


## SECTION AT LANDING

SCALE: 1/2" = 1'-0"

9

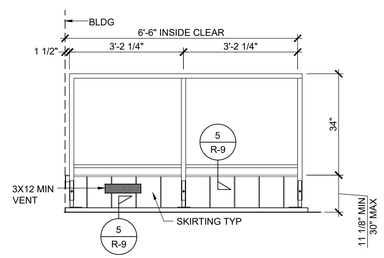


## LANDING ELEVATION

SCALE: 1/2" = 1'-0"

6

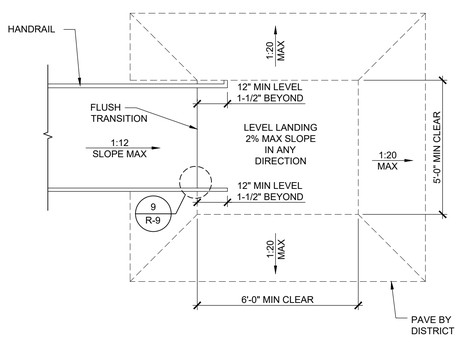


NOTE:
1. 1:20 TRANSITIONS OFF OF LOWER LANDING REQUIRES NO HANDRAILS.
2. TRANSITIONS EXCEEDING 1:20 BUT NOT TO EXCEED 1:12 REQUIRE REMOVAL OF 12" HANDRAIL EXTENSION AND ADDITIONAL HANDRAILING ALSO REQUIRES ADDITIONAL RAMP LENGTH BY DISTRICT. (THIS CONDITION REQUIRES A SITE SPECIFIC DETAIL PROVIDED BY ARCHITECT TO DEMONSTRATE ACCESSIBLE RAMP.)

* RAMPS AND LANDINGS TO BE SLOPED SO AS NOT TO RETAIL STANDING WATER,1:48 (2.083%) MAX SLOPE.

## LANDING ELEVATION (REAR)

SCALE: 3/8" = 1'-0"

10

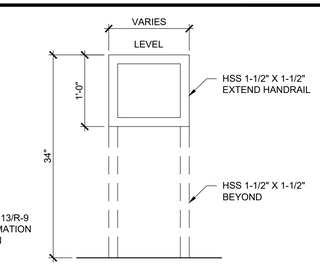


NOTE:
SEE DETAIL 13/R-9
FOR INFORMATION
NOT SHOWN

## RETURN EXTEND HANDRAIL ELEVATION

SCALE: 1" = 1'-0"

7

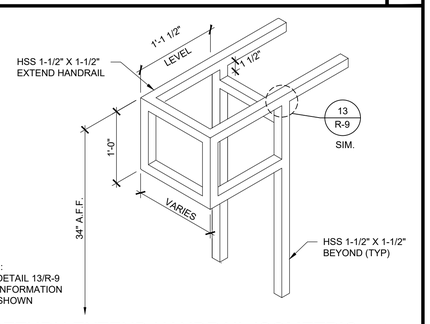


NOTE:
SEE DETAIL 13/R-9
FOR INFORMATION
NOT SHOWN

## RETURN EXTEND HANDRAIL ISOMETRIC

SCALE: 1" = 1'-0"

8

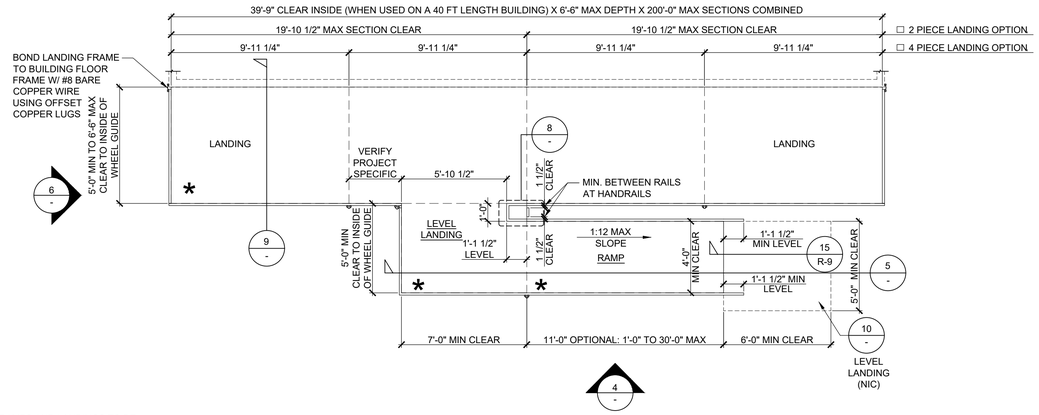


* RAMPS AND LANDINGS TO BE SLOPED SO AS NOT TO RETAIN STANDING WATER,1:48 (2.083%) MAX SLOPE

## RAMP AND LANDING AT BUILDING

SCALE: 1/4" = 1'-0"

1

NOTE:
PER CBC 1012.5.1 MINIMUM EGRESS WIDTH SHALL COMPLY WITH CBC 1020.3 (CORRIDORS)

1020.3
THE MIN WIDTH OF CORRIDORS SPECIFIED IN TABLE 1020.3 SHALL BE DETERMINED BY SECTION 1005.3, PER OCCUPANT. HOWEVER FOR GROUP E IF THERE ARE 100 OR MORE OCCUPANTS REQ'D TO EXIT THE RAMP SHALL BE 72" MIN WIDTH. THIS WILL REQUIRE A NEW DESIGN.

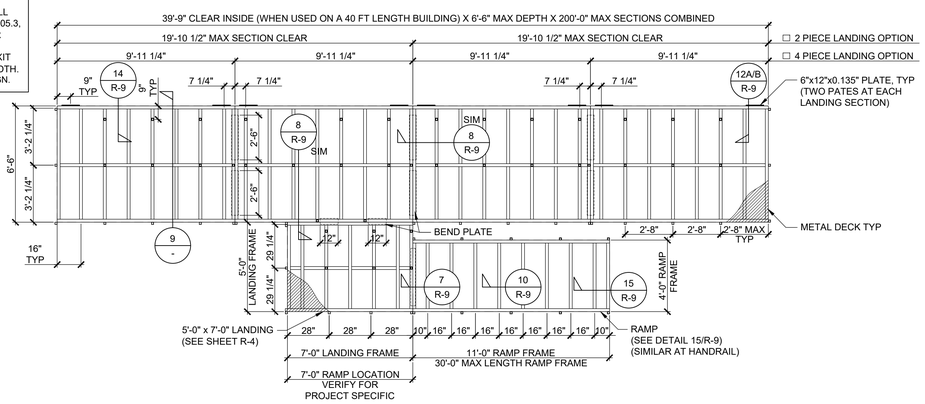


## RAMP AND LANDING FRAMING PLAN

SCALE: 1/4" = 1'-0"

2

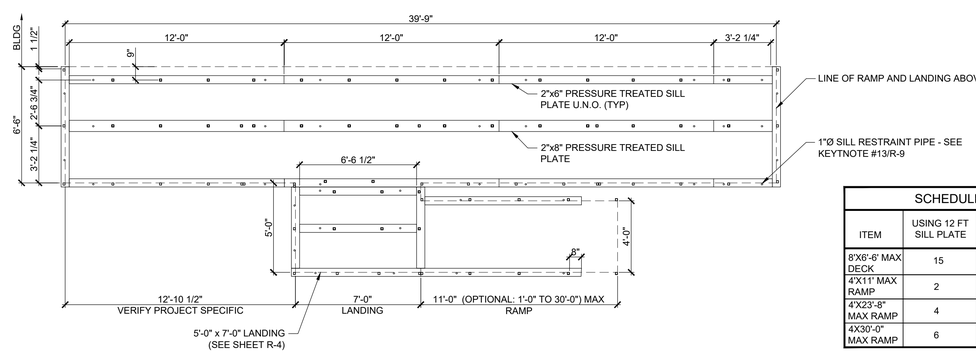


| SCHEDULE | | |
|---|---|---|
| ITEM | USING 12 FT SILL PLATE | MIN QTY OF PIPES |
| 8'X6'-6' MAX DECK | 15 | 38 |
| 4'X11' MAX RAMP | 2 | 4 |
| 4'X23'-8" MAX RAMP | 4 | 8 |
| 4X30'-0" MAX RAMP | 6 | 12 |

## SILL PLAN FOR RAMP AND LANDING

SCALE: 1/4" = 1'-0"

3

STATE AGENCY APPROVAL


SKC COMPANY
15345 FAIRFIELD RANCH RD - SUITE 160 CHINO HILLS, CA 91709
OFFICE: (909) 740-3120, FAX: (909) 726-9470
WEBSITE: WWW.SKCCOMPANY.COM
MANUFACTURER #MF1279666 DEALER # DL1279666
GC LIC # 992118 SBE CERTIFIED



ALL DESIGNS INDICATED ON THESE PLANS/DRAWINGS ARE PROPERTY OF SKC, INC AND ARE FOR THE USE BY SKC IN THE SPECIFIED JOB ONLY. THEY SHALL NOT BE USED AND/OR DUPLICATED OR TRANSMITTED IN ANY FORM, FOR ANY PURPOSE WITHOUT THE PRIOR WRITTEN CONSENT OF SKC, INC. ANY UNAUTHORIZED USE OF THESE PLANS SHALL SUBJECT THE OWNER OF SAID PROPERTY TO LIQUIDATED DAMAGES OF $75,000.00. THESE PLANS ARE PROTECTED UNDER THE PROVISIONS OF THE 1976 COPYRIGHT ACT COPYRIGHT SKC, © ALL RIGHTS RESERVED.


DISTRICT/CUSTOMER NAME:

SCHOOL/SITE NAME:

SHEET TITLE:

COMMON LANDING & RAMP PLAN

PRE-CHECK (PC) DOCUMENT
CODE: 2022 CBC
A SEPARATE PROJECT APPLICATION FOR CONSTRUCTION IS REQUIRED

APPROVED
DIV. OF THE STATE ARCHITECT
APP: 04-122029 PC
REVIEWED FOR
SS ☑ FLS ☑ ACS ☑ CG ☐
DATE: 09/27/2023

PROFESSIONAL OF RECORD ON PC


ORION
Structural Engineering, Inc.
11305 RANCHO BERNARDO RD
SUITE 121
SAN DIEGO CA, 92127
PHONE: (858) 679-1974
REGISTERED PROFESSIONAL ENGINEER
ALAN J. OTTO
No. 2437
EXP. 12/31/24
STRUCTURAL
STATE OF CALIFORNIA

FIRM: ORION STRUCTURAL ENGINEERING, INC.
ADDRESS: 11305 RANCHO BERNARDO ROAD, SUITE 121
CITY: SAN DIEGO, CA 92127
PHONE: (858) 679-1974


PROJECT SPECIFIC PROFESSIONAL OF RECORD

FIRM:
ADDRESS:
CITY:
PHONE:

REVISIONS

1 -
2 -
3 -
4 -
5 -

| | |
|---|---|
| PROJECT NO.: | 00-0000 |
| DRAFTER: | 00 |
| SCALE: | AS NOTED |
| DATE: | 00-00-00 |

SHEET NUMBER

R-6

9/26/2023 9:28:53 AM

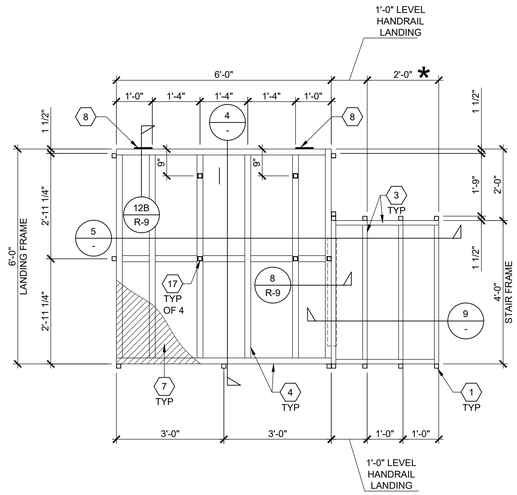


* = NUMBER OF STEPS WILL VARY. FIELD VERIFY DIMENSION PRIOR TO FABRICATION

## STAIR AND LANDING FRAMING PLAN

SCALE: 1/2" = 1'-0"

2

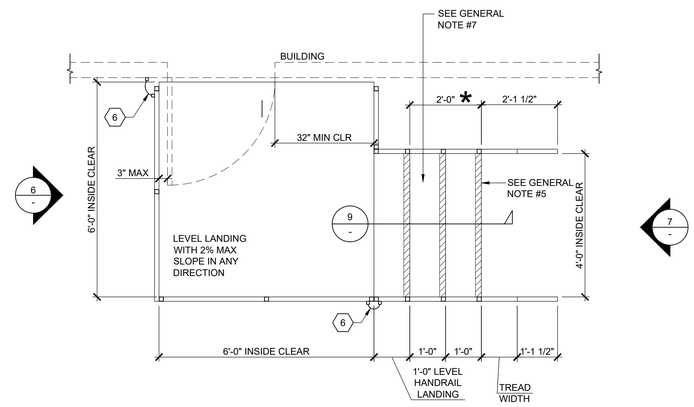


* = NUMBER OF STEPS WILL VARY. FIELD VERIFY DIMENSION PRIOR TO FABRICATION

## STAIR AND LANDING PLAN

SCALE: 1/2" = 1'-0"

1

## KEY NOTES

1. VERTICAL RAIL POST TUBE: 1 1/2" X 1 1/2" X 14 GA MIN (t = 0.075") SQUARE TUBE.
2. HANDRAIL TUBE: 1 1/2" X 1 1/2" X 16 GA MIN (t =0.060") SQUARE TUBE
3. STAIR TREAD AND RISER TUBE: 2" X 2" X 14 GA MIN (t = 0.075") SQUARE TUBE
4. LANDING JOISTS &PERIMETER TUBE: 2" X 2" X 14 GA MIN (t = 0.075") SQUARE TUBE
5. MIN 3" X 12" VENT
6. BONDING LUGS WITH MIN #8 COPPER WIRE
7. 12 GA MINIMUM METAL DECK (0.105"): NON-SLIP SURFACE MAINTAINABLE FOR 1 YEAR. SEE ACCESS NOTE #5 ON SHEET R-3
8. STEEL TAB AT LANDING
9. WHEELCHAIR GUIDE RAILS: 1" X 1" X 14 GA MIN (t = 0.075") SQUARE TUBE
10. 3/8"Ø ZINC COATED MACHINE BOLT WITH NUT
11. NOT USED
12. 2 X 6 HF #2 MIN PRESSURE TREATED SILL PLATE. SEE SILL PLATE SCHEDULE.
13. 1"Ø X 14" STANDARD WEIGHT HOT DIPPED GALVANIZED PIPE AT 10'-0" OC MAX, 2'-0"MAX FROM EACH CORNER IN BOTH DIRECTIONS AND A MINIMUM OF TWO PIPES PER DISCONTINUOUS FOUNDATION STRIP PER DSA IR 16-1 SECTION 3.2.3.5 DRILL SILL PLATE 1 1/2"Ø MAX HOLE PIPE SHOULD PENETRATE INTO SOIL AND/OR PAVING A MIN OF 12" MEASURED VERTICALLY PIPES SHALL BE INSTALLED ON A CONTINUOUS PLATE.
14. NOT USED
15. NOT USED
16. PLASTIC END CAP
17. LANDING SUPPORTS. SEE SHEET R-9
18. NOT USED
19. NOT USED
20. NOT USED
21. NOT USED
22. WOOD SKIRTING
23. NOT USED
24. 3" X 1" X 3'-0" X 10 GA BENT PLATE (0.135")

| SILL PLATE SCHEDULE | | |
|---|---|---|
| ITEM | USING 12 FT SILL PLATE | MIN QTY OF PIPES |
| 6'X6' MAX LANDING | 3 | 10 |
| STEPS | 1 | 4 |

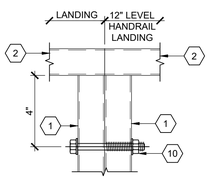


## STAIR TO LANDING CONN (TOP)

SCALE: 3" = 1'-0"

11

NOTE:
VERTICAL POST FOR HANDRAIL NOT SHOWN FOR CLARITY

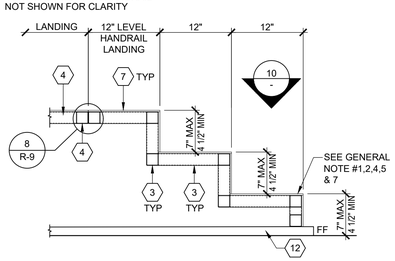


## SECTION AT STAIR RISER

SCALE: 1" = 1'-0"

9

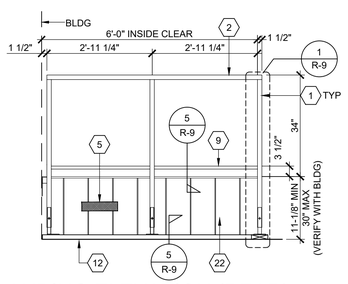


## LANDING ELEVATION (REAR)

SCALE: 1/2" = 1'-0"

6

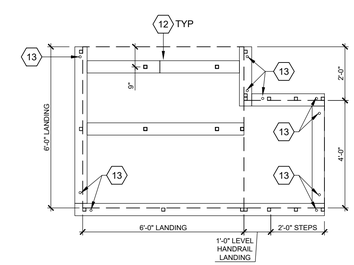


## SILL PLATE PLAN

SCALE: 3/8" = 1'-0"

3

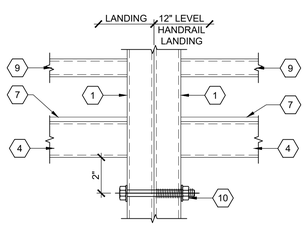


## STAIR TO LANDING CONN (BTM)

SCALE: 3" = 1'-0"

12

NOTE:
VERTICAL POST FOR HANDRAIL NOT SHOWN FOR CLARITY

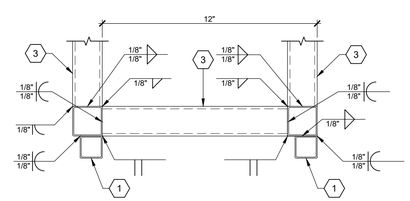


## STAIR TREAD PLAN VIEW

SCALE: 3" = 1'-0"

10

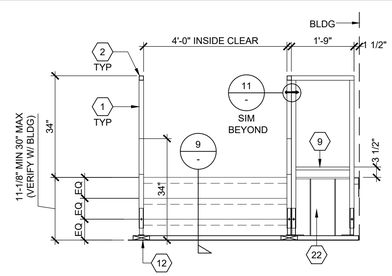


## STEP ELEVATION

SCALE: 1/2" = 1'-0"

7

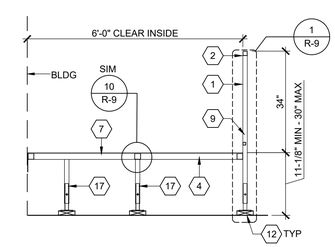


## SECTION AT LANDING

SCALE: 1/2" = 1'-0"

4

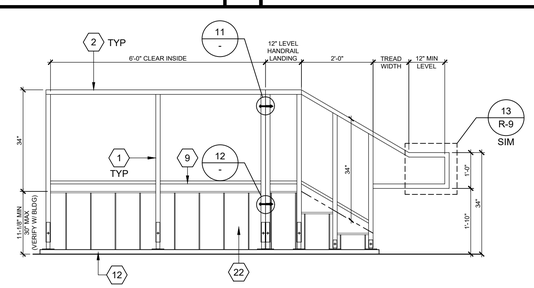


## STEPS & LANDING ELEVATION

SCALE: 1/2" = 1'-0"

8

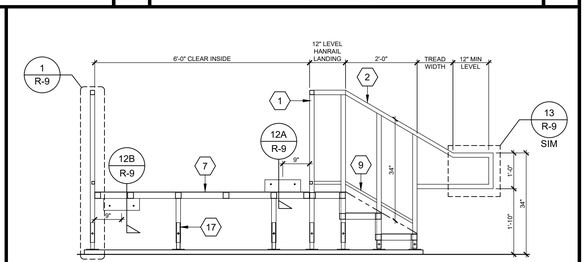


## SECTION AT STEPS & LANDING

SCALE:1/2" = 1'-0"

5

13

## GENERAL NOTES

1. THE RISE OF STAIR STEPS SHALL NOT BE LESS THAN 4-1/2" NOR MORE THAN 7". STAIR TREADS SHALL BE OF UNIFORM SIZE AND SHAPE, THE GREATER HEIGHT WITHIN ANY FLIGHT OF STAIR SHALL NOT EXCEED THE SMALLEST BY MORE THAN 3/8"
2. EXCEPT AS PERMITTED, THE RUN SHALL NOT BE LESS THAN 11" AS MEASURED HORIZONTALLY BETWEEN VERTICAL PLANES OF THE FURTHERMOST PROJECTION OF THE ADJACENT TREADS OR NOSING
3. TOP OF HANDRAILS AND HANDRAIL EXTENSIONS SHALL BE ONE CONSTANT HEIGHT BETWEEN 34"-38" ABOVE STAIR NOSING (NOT A RANGE)
4. ALL STAIR NOSING TO BE ROUNDED 1/2" RADIUS
5. PROVIDE 2" MIN WIDE (FULL WIDTH OF TREAD) CONTRASTING COLOR (70%) WARNING STRIPE 1" MAX FROM EDGE OF NOSING OF EACH STAIR AND TOP LANDING
6. SEE SHEET R-3 FOR ADDITIONAL GENERAL NOTES
7. STAIR TREADS MUST NOT COLLECT WATER
8. PROVISION OF THE STAIRS SHALL IN NO WAY ALLEVIATE OR PROVIDE AN EXCEPTION TO PROVIDING RAMPS AT ALL ENTRIES AND GROUND FLOOR EXITS

STATE AGENCY APPROVAL


SKC COMPANY
15345 FAIRFIELD RANCH RD - SUITE 160 CHINO HILLS, CA 91709
OFFICE: (909) 740-3120, FAX: (909) 726-9470
WEBSITE: WWW.SKCCOMPANY.COM
MANUFACTURER #MF 1276666 DEALER # DL 1279666
GC LIC # 992118 SBE CERTIFIED



ALL DESIGNS INDICATED ON THESE PLANS/DRAWINGS ARE PROPERTY OF SKC, INC AND ARE FOR THE USE BY SKC IN THE SPECIFIED JOB ONLY. THEY SHALL NOT BE USED AND/OR DUPLICATED OR TRANSMITTED IN ANY FORM, FOR ANY PURPOSE WITHOUT THE PRIOR WRITTEN CONSENT OF SKC, INC. ANY UNAUTHORIZED USE OF THESE PLANS SHALL SUBJECT THE OWNER OF SAID PROPERTY TO LIQUIDATED DAMAGES OF $75,000.00. THESE PLANS ARE PROTECTED UNDER THE PROVISIONS OF THE 1976 COPYRIGHT ACT COPYRIGHT SKC, © ALL RIGHTS RESERVED.


DISTRICT/CUSTOMER NAME:

SCHOOL/SITE NAME:

SHEET TITLE:

STAIR & LANDING DETAILS

PRE-CHECK (PC) DOCUMENT
CODE: 2022 CBC
A SEPARATE PROJECT APPLICATION FOR CONSTRUCTION IS REQUIRED

APPROVED
DIV. OF THE STATE ARCHITECT
APP: 04-122029 PC
REVIEWED FOR
SS ☑ FLS ☑ ACS ☑ CG ☐
DATE: 09/27/2023

PROFESSIONAL OF RECORD ON PC


ORION Structural Engineering, Inc.
11305 RANCHO BERNARDO RD
SUITE 121
SAN DIEGO CA, 92127
PHONE (858) 679-1974
REGISTERED PROFESSIONAL ENGINEER
SEAN J. ORR
No. 92127
Exp. 12/31/24
STRUCTURAL
STATE OF CALIFORNIA
FIRM: ORION STRUCTURAL ENGINEERING, INC.
ADDRESS: 11305 RANCHO BERNARDO ROAD, SUITE 121
CITY: SAN DIEGO, CA 92127
PHONE: (858) 679-1974


PROJECT SPECIFIC PROFESSIONAL OF RECORD

FIRM:
ADDRESS:
CITY:
PHONE:

REVISIONS

1 -
2 -
3 -
4 -
5 -

| | |
|---|---|
| PROJECT NO.: | 00-0000 |
| DRAFTER: | 00 |
| SCALE: | AS NOTED |
| DATE: | 00-00-00 |

SHEET NUMBER

R-7

9/26/2023 9:29:07 AM

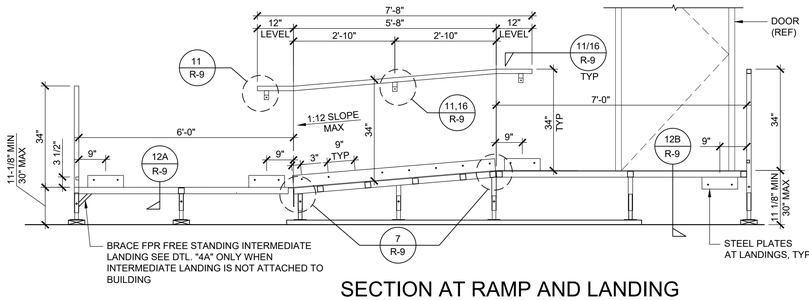


## SECTION AT RAMP AND LANDING

SCALE: 1/2" = 1'-0"

4

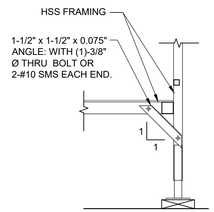


## DETAIL "4A"

SCALE: 1" = 1'-0"

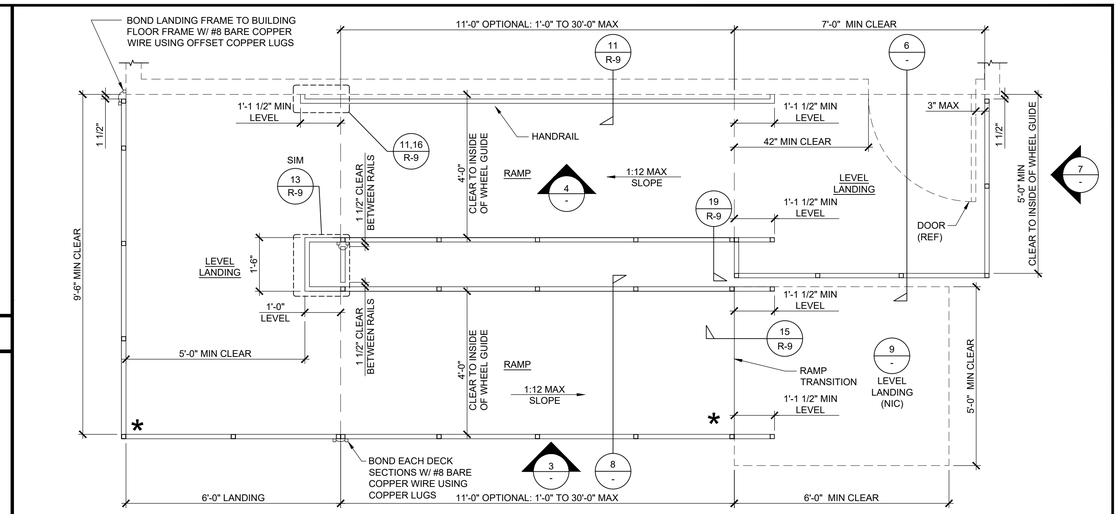


* RAMPS AND LANDINGS TO BE SLOPED SO AS NOT TO RETAIN STANDING WATER,1:48 (2.083%) MAX SLOPE.

## RAMP AND LANDING AT BUILDING

SCALE: 1/2" = 1'-0"

1

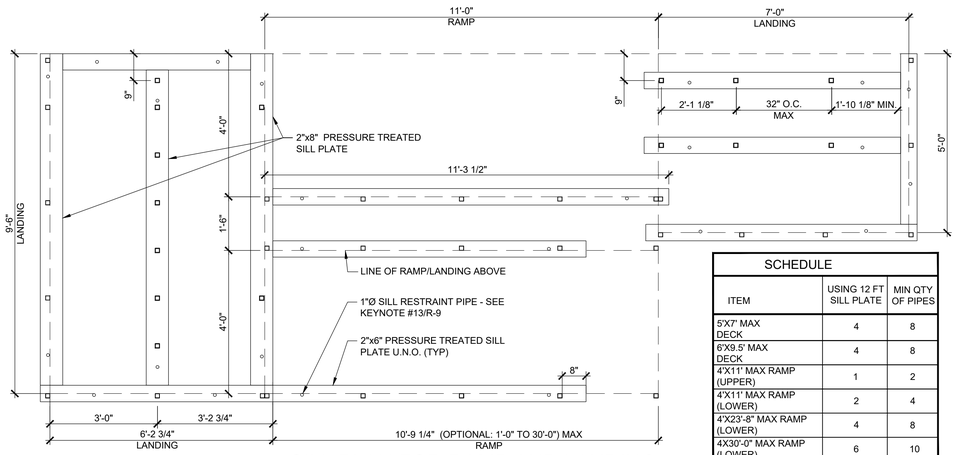


| SCHEDULE | | |
|---|---|---|
| ITEM | USING 12 FT SILL PLATE | MIN QTY OF PIPES |
| 5'X7' MAX DECK | 4 | 8 |
| 6'X9.5' MAX DECK | 4 | 8 |
| 4'X11' MAX RAMP (UPPER) | 1 | 2 |
| 4'X11' MAX RAMP (LOWER) | 2 | 4 |
| 4'X23'-8" MAX RAMP (LOWER) | 4 | 8 |
| 4X30'-0" MAX RAMP (LOWER) | 6 | 10 |

## SILL PLAN FOR RAMP AND LANDING

SCALE: 1/2" = 1'-0"

5

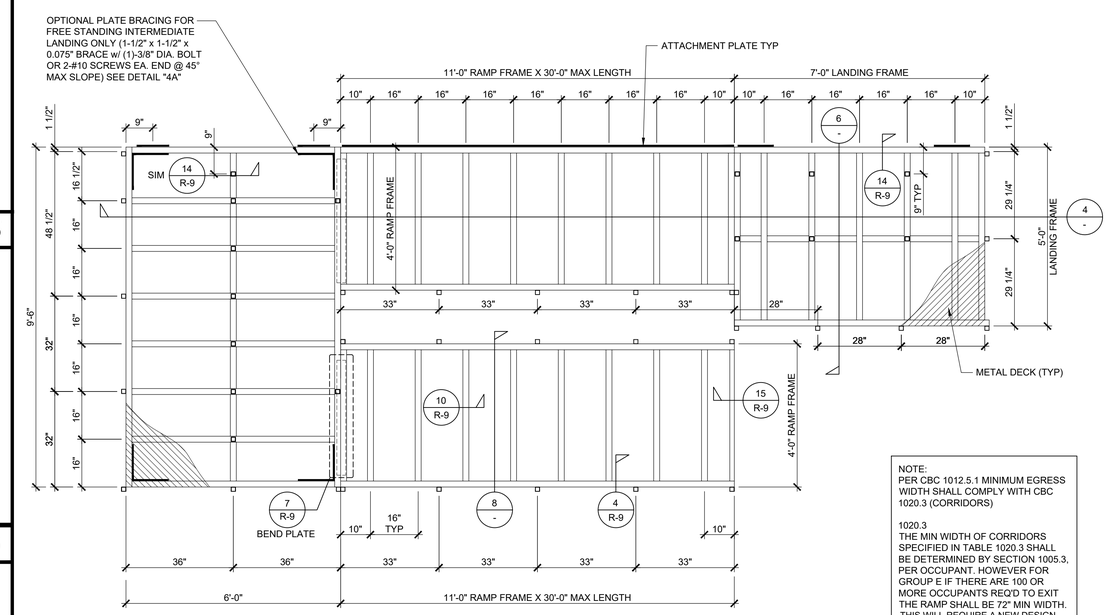


NOTE:
PER CBC 1012.5.1 MINIMUM EGRESS WIDTH SHALL COMPLY WITH CBC 1020.3 (CORRIDORS)

1020.3
THE MIN WIDTH OF CORRIDORS SPECIFIED IN TABLE 1020.3 SHALL BE DETERMINED BY SECTION 1005.3, PER OCCUPANT. HOWEVER FOR GROUP E IF THERE ARE 100 OR MORE OCCUPANTS REQ'D TO EXIT THE RAMP SHALL BE 72" MIN WIDTH. THIS WILL REQUIRE A NEW DESIGN.

## RAMP AND LANDING FRAMING PLAN

SCALE: 1/2" = 1'-0"

2

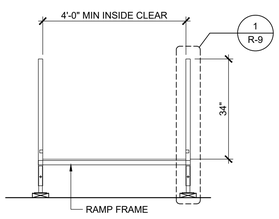


## SECTION AT RAMP

SCALE: 1/2" = 1'-0"

8

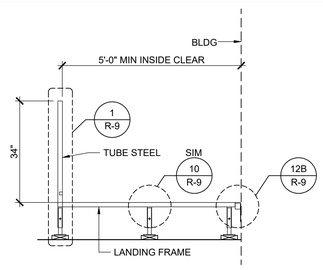


## SECTION AT LANDING

SCALE: 1/2" = 1'-0"

6

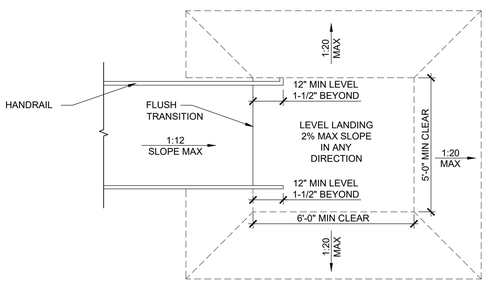


NOTE:
1. 1:20 TRANSITIONS OFF OF LOWER LANDING REQUIRES NO HANDRAILS.
2. TRANSITIONS EXCEEDING 1:20 BUT NOT TO EXCEED 1:12 REQUIRE REMOVAL OF 12" HANDRAIL EXTENSION AND ADDITIONAL HANDRAILING ALSO REQUIRES ADDITIONAL RAMP LENGTH BY DISTRICT. (THIS CONDITION REQUIRES A SITE SPECIFIC DETAIL PROVIDED BY ARCHITECT TO DEMONSTRATE ACCESSIBLE RAMP.)

* RAMPS AND LANDINGS TO BE SLOPED SO AS NOT TO RETAIL STANDING WATER,1:48 (2.083%) MAX SLOPE.

## CLEAR LANDING SPACE

SCALE: 3/8" = 1'-0"

9

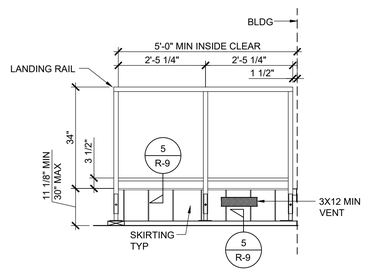


## LANDING ELEVATION

SCALE: 1/2" = 1'-0"

7

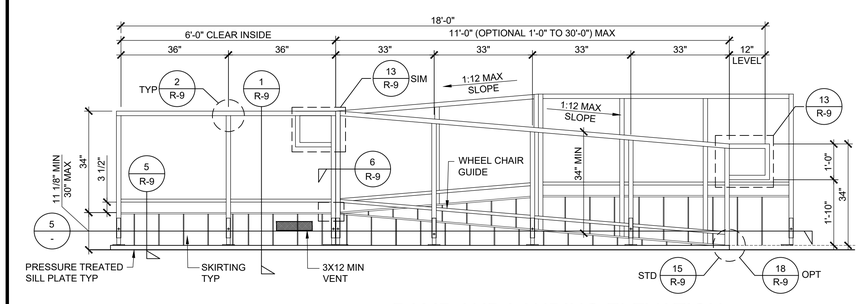


## RAMP AND LANDING ELEVATION

SCALE: 1/2" = 1'-0"

3

STATE AGENCY APPROVAL

SKC COMPANY

15345 FAIRFIELD RANCH RD - SUITE 160 CHINO HILLS, CA 91709
OFFICE: (909) 740-3120, FAX: (909) 726-9470
WEBSITE: WWW.SKCCOMPANY.COM
MANUFACTURER #MF 1279666 DEALER # DL 1279666
GC LIC # 992118 SBE CERTIFIED

ALL DESIGNS INDICATED ON THESE PLANS/DRAWINGS ARE PROPERTY OF SKC, INC AND ARE FOR THE USE BY SKC IN THE SPECIFIED JOB ONLY. THEY SHALL NOT BE USED AND/OR DUPLICATED OR TRANSMITTED IN ANY FORM, FOR ANY PURPOSE WITHOUT THE PRIOR WRITTEN CONSENT OF SKC, INC. ANY UNAUTHORIZED USE OF THESE PLANS SHALL SUBJECT THE OWNER OF SAID PROPERTY TO LIQUIDATED DAMAGES OF $75,000.00. THESE PLANS ARE PROTECTED UNDER THE PROVISIONS OF THE 1976 COPYRIGHT ACT COPYRIGHT SKC, © ALL RIGHTS RESERVED.

DISTRICT/CUSTOMER NAME:

SCHOOL/SITE NAME:

SHEET TITLE:

SWITCHBACK RAMP & LANDING PLAN

PRE-CHECK (PC) DOCUMENT
CODE: 2022 CBC
A SEPARATE PROJECT APPLICATION FOR CONSTRUCTION IS REQUIRED

APPROVED
DIV. OF THE STATE ARCHITECT
APP: 04-122029 PC
REVIEWED FOR
SS ☑ FLS ☑ ACS ☑ CG ☐
DATE: 09/27/2023

PROFESSIONAL OF RECORD ON PC

ORION
Structural Engineering, Inc.
11305 RANCHO BERNARDO RD
SUITE 121
SAN DIEGO CA 92127
PHONE: (858) 679-1974

REGISTERED PROFESSIONAL ENGINEER
RAY L. ORR
No. 12104
EXP. 12/31/24
STRUCTURAL
STATE OF CALIFORNIA

FIRM: ORION STRUCTURAL ENGINEERING, INC.
ADDRESS: 11305 RANCHO BERNARDO ROAD, SUITE 121
CITY: SAN DIEGO, CA 92127
PHONE: (858) 679-1974

PROJECT SPECIFIC PROFESSIONAL OF RECORD

FIRM:
ADDRESS:
CITY:
PHONE:

REVISIONS

1 -
2 -
3 -
4 -
5 -

| | |
|---|---|
| PROJECT NO.: | 00-0000 |
| DRAFTER: | 00 |
| SCALE: | AS NOTED |
| DATE: | 00-00-00 |

SHEET NUMBER

R-8

9/26/2023 9:29:23 AM

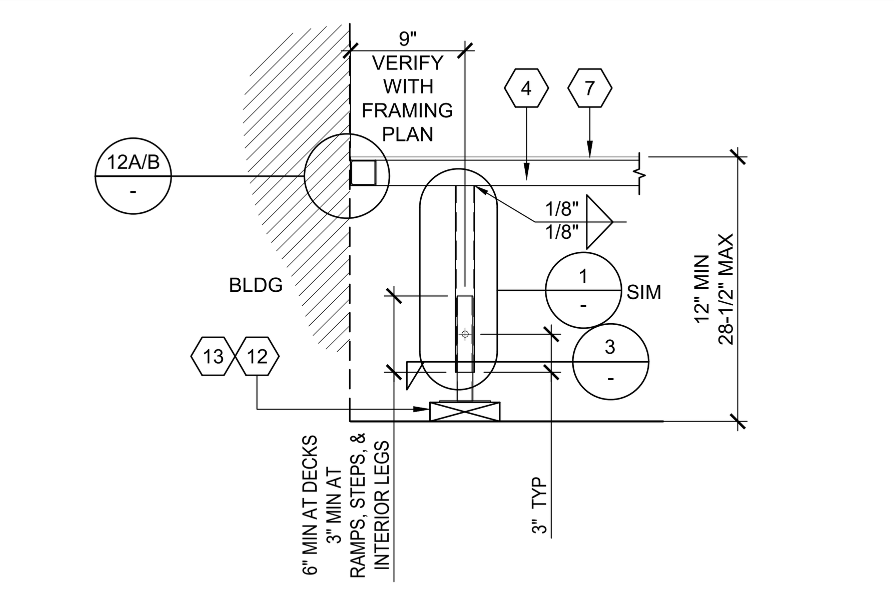


## INTERIOR ADJUSTABLE SUPPORT LEGS 14
SCALE: 1" = 1'-0"

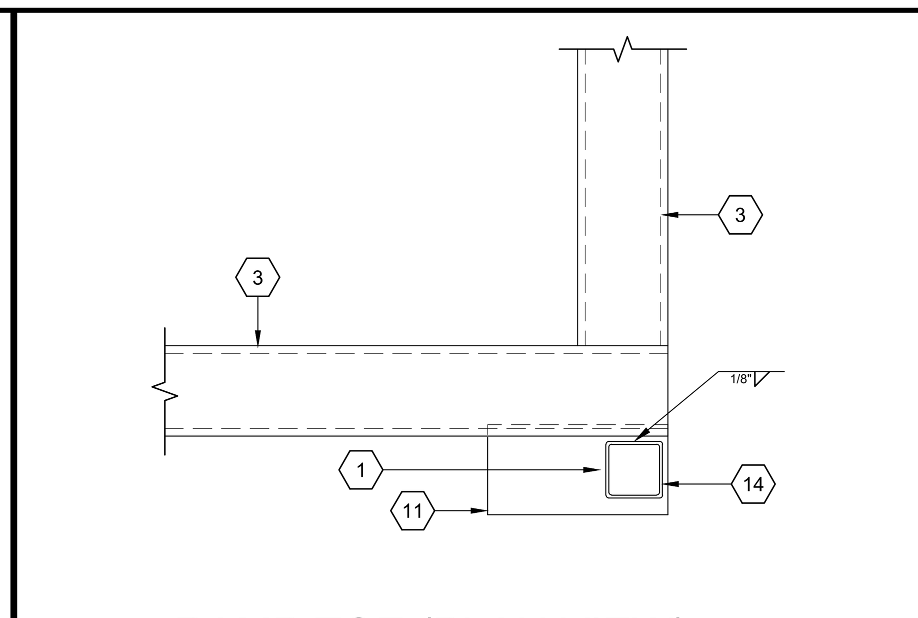


## RAMP TOE (PLAN VIEW) 9
SCALE: 6" = 1'-0"

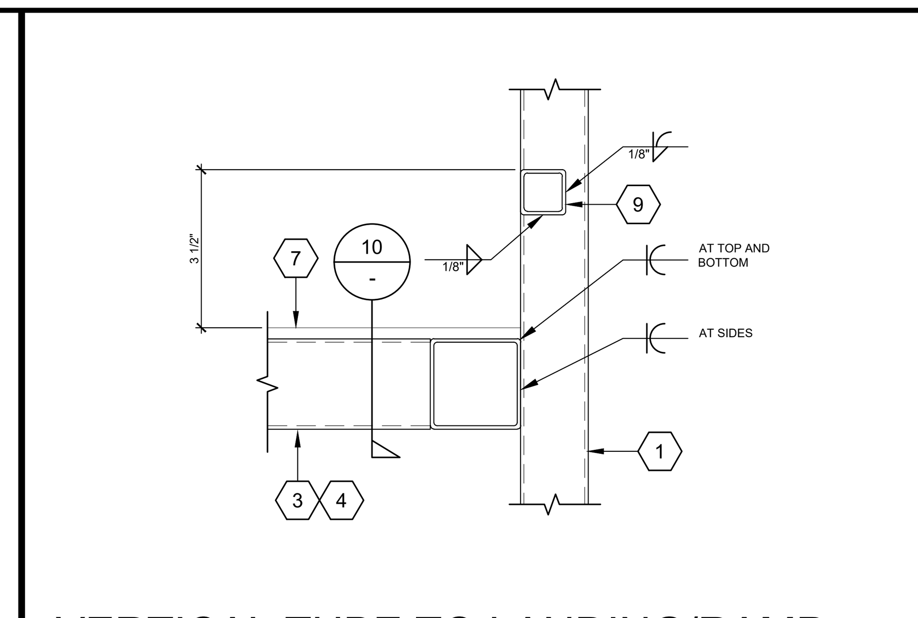


## VERTICAL TUBE TO LANDING/RAMP 4
SCALE: 6" = 1'-0"

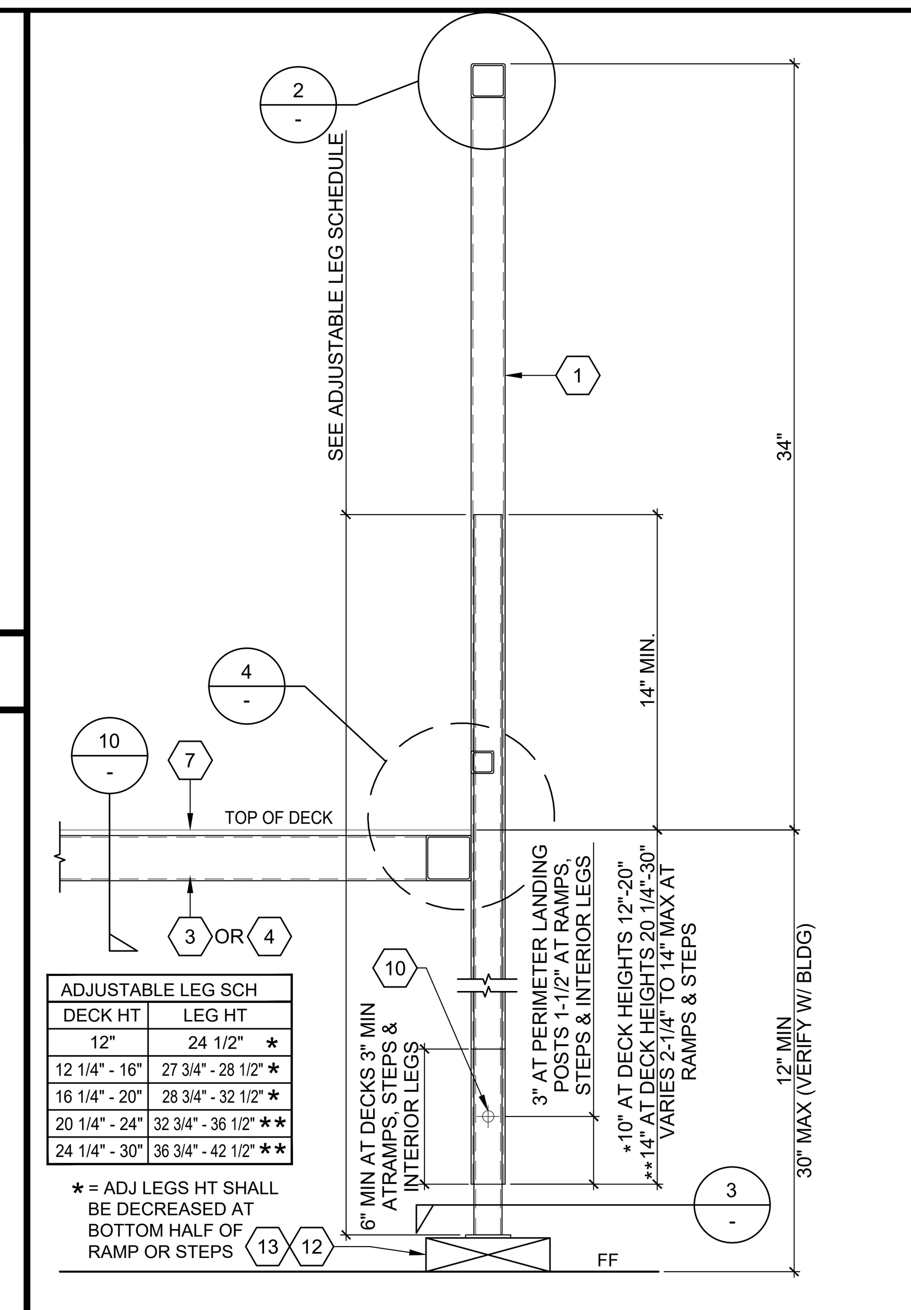


| ADJUSTABLE LEG SCH | |
|---|---|
| DECK HT | LEG HT |
| 12" | 24 1/2" * |
| 12 1/4" - 16" | 27 3/4" - 28 1/2" * |
| 16 1/4" - 20" | 28 3/4" - 32 1/2" * |
| 20 1/4" - 24" | 32 3/4" - 36 1/2" ** |
| 24 1/4" - 30" | 36 3/4" - 42 1/2" ** |

* = ADJ LEGS HT SHALL BE DECREASED AT BOTTOM HALF OF RAMP OR STEPS

## SECTION AT DECK & HANDRAIL 1
SCALE: 3" = 1'-0"

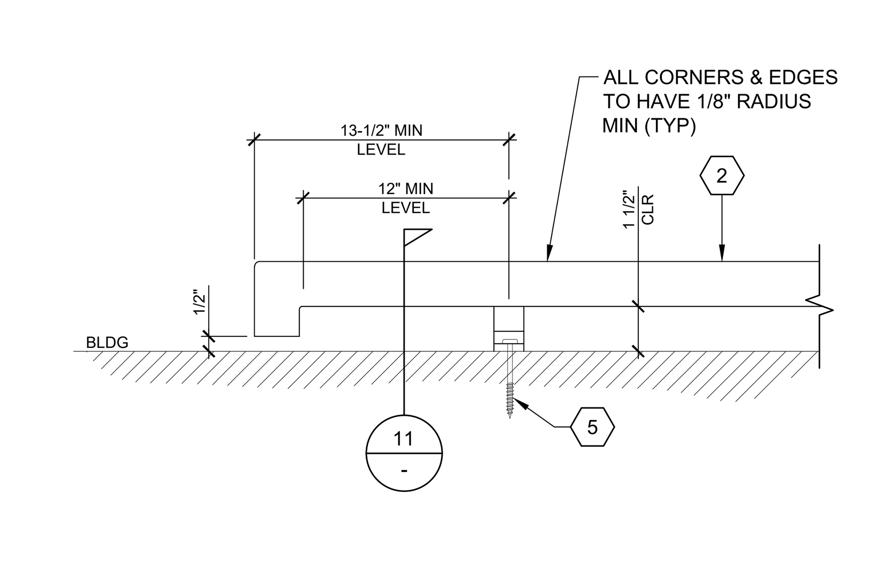


## SECTION AT HANDRAIL 16
SCALE: 1-1/2" = 1'-0"

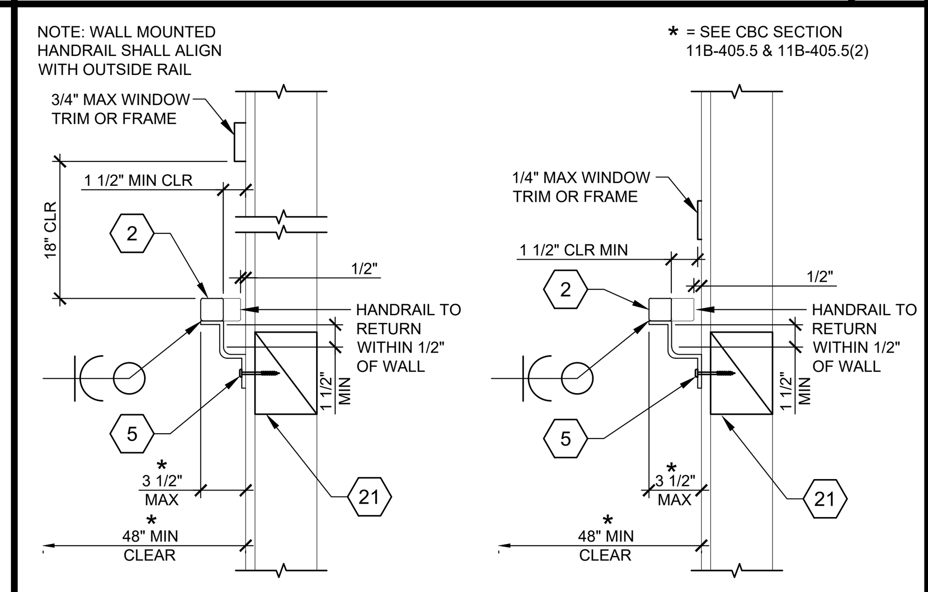


## HANDRAIL CONNECTION 11
SCALE: 1-1/2" = 1'-0"

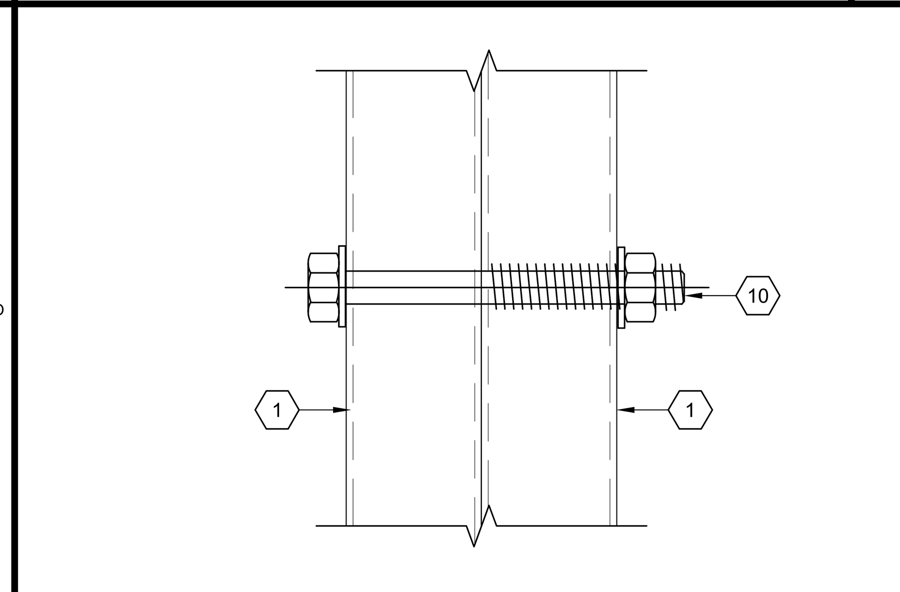

## VERT TUBE TO VERT TUBE CONN 6
SCALE: 1-1/2" = 1'-0"

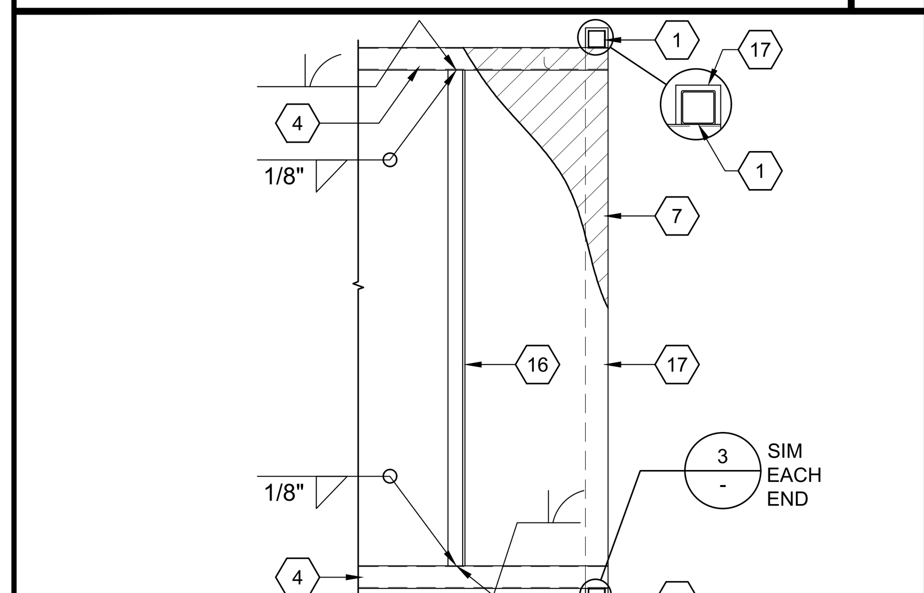


## RAMP SECTION 17
SCALE: 3/4" = 1'-0"

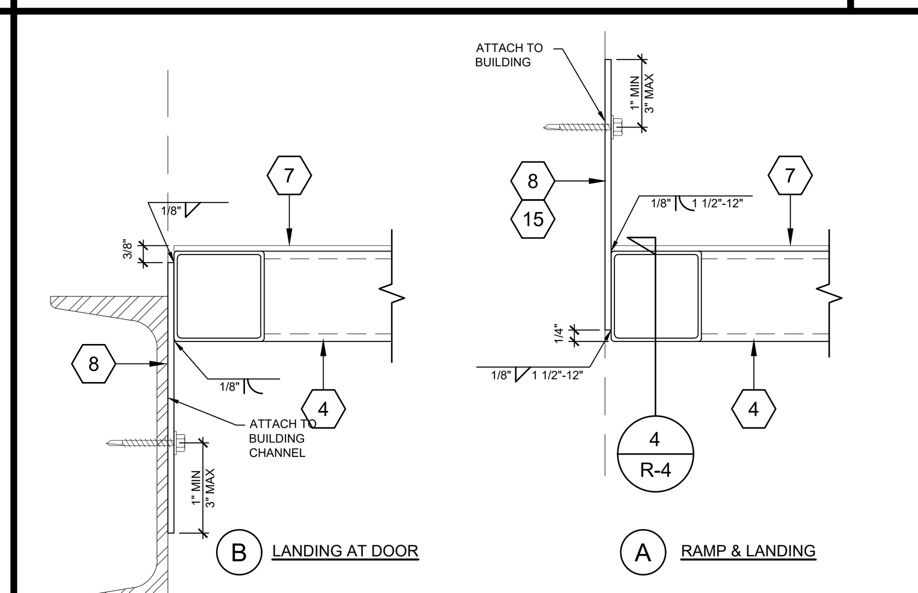


## SECTION AT PLATE 12
SCALE: 6" = 1'-0"

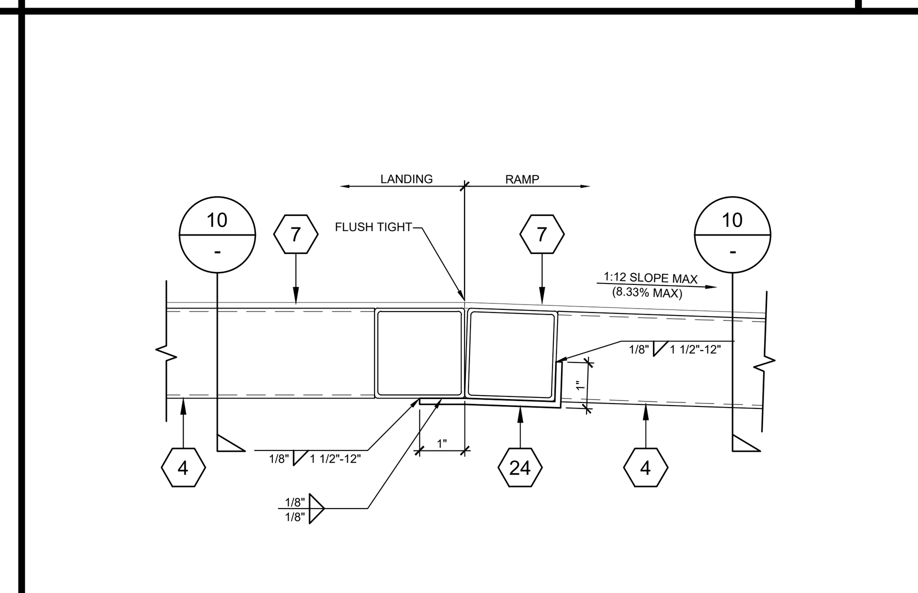


## RAMP TO LANDING 7
SCALE: 6" = 1'-0"

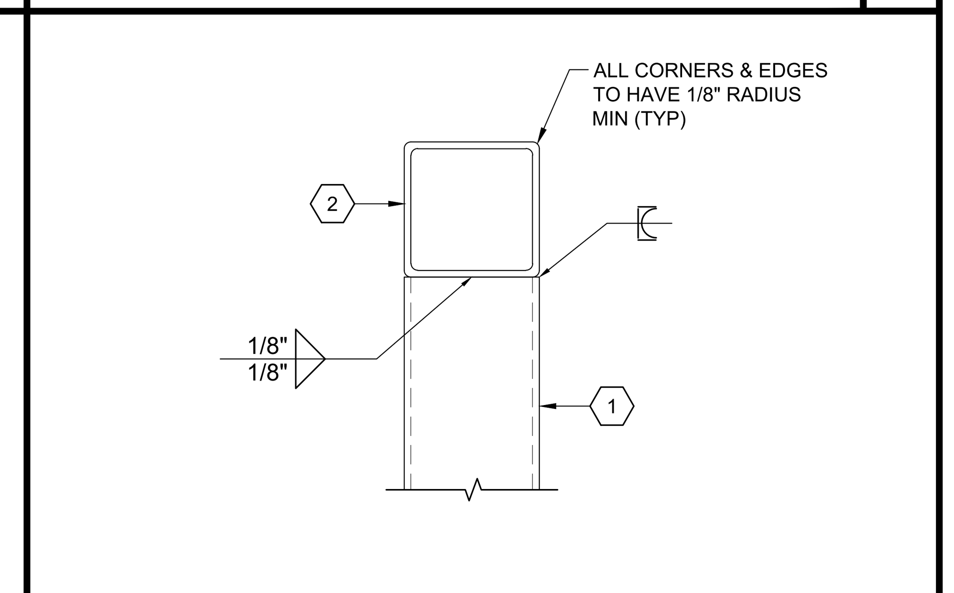


## HANDRAIL 2
SCALE: 1'-0" = 1'-0"

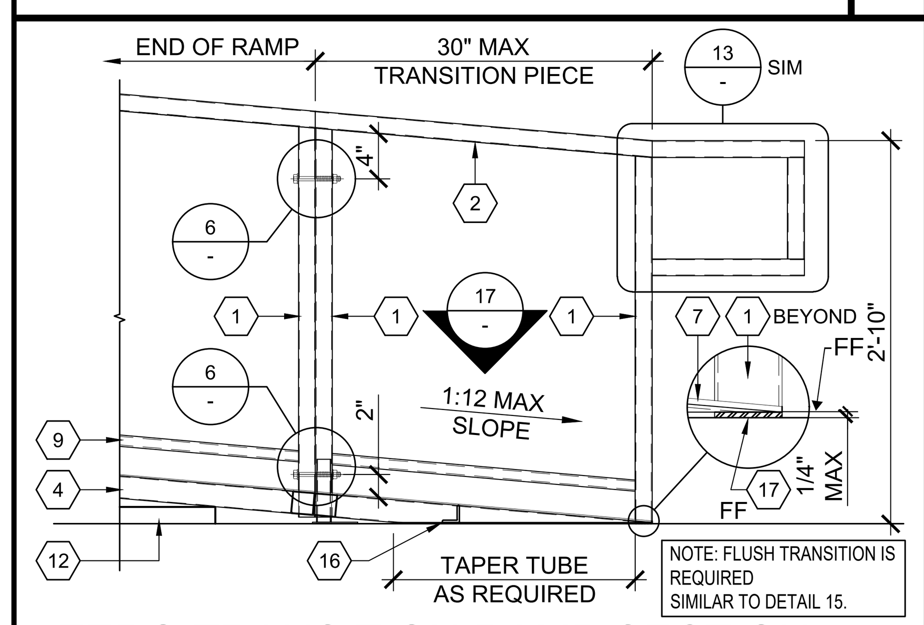


## ZERO TRANSITION RAMP SECTION 18
SCALE: 3/4" = 1'-0"

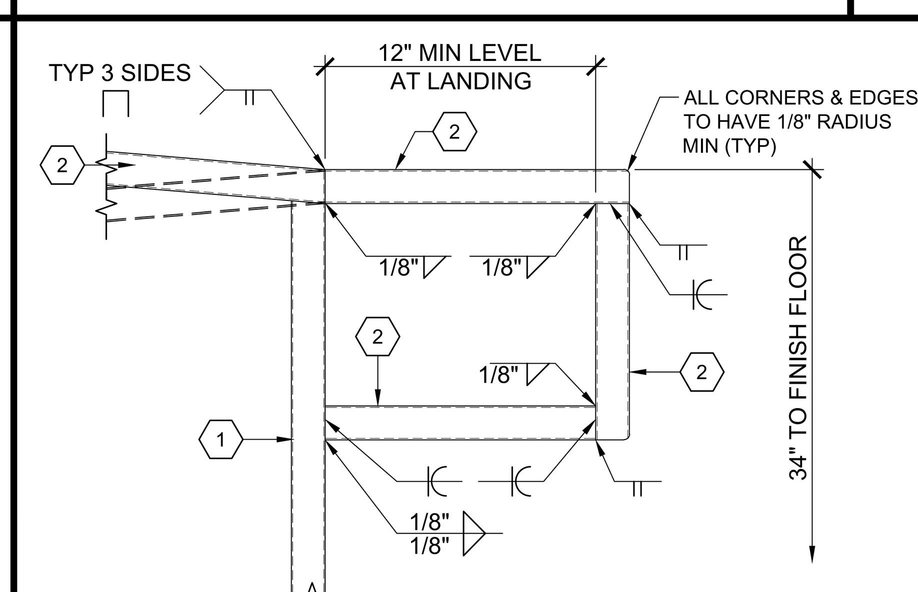


## HANDRAIL EXTENSION 13
SCALE: 1-1/2" = 1'-0"

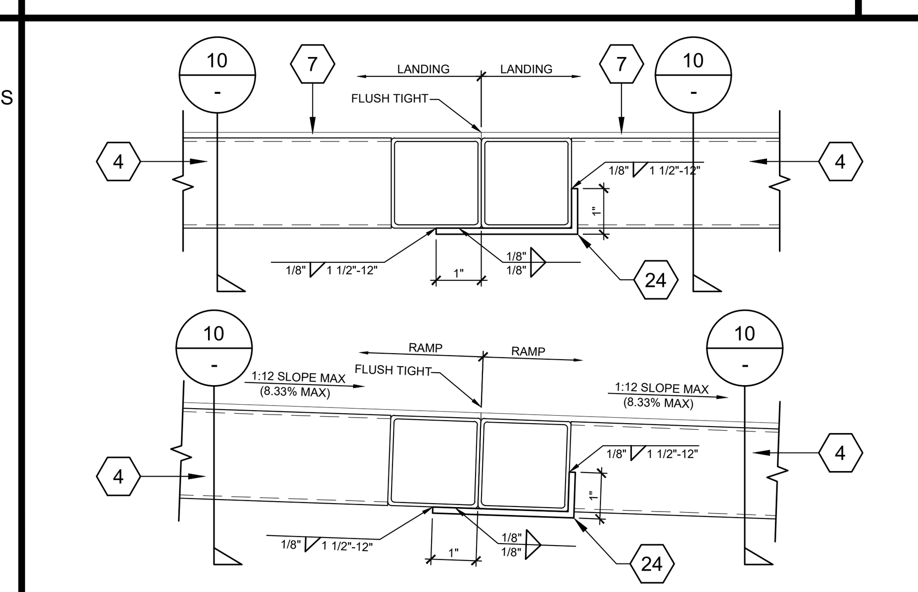


## RAMP OR LANDING EXTENSION 8
SCALE: 6" = 1'-0"

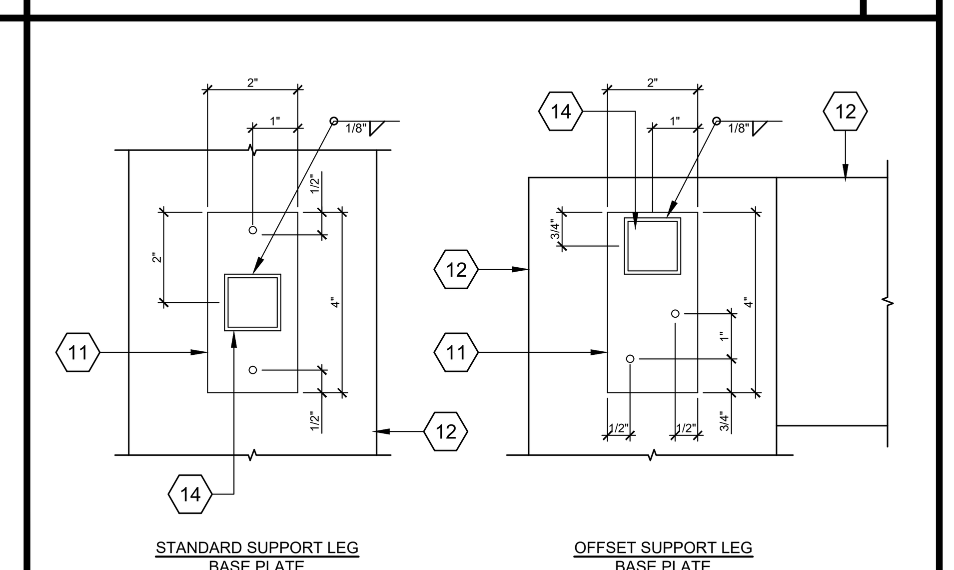


## BASE PLATE PLAN VIEW 3
SCALE: 6" = 1'-0"

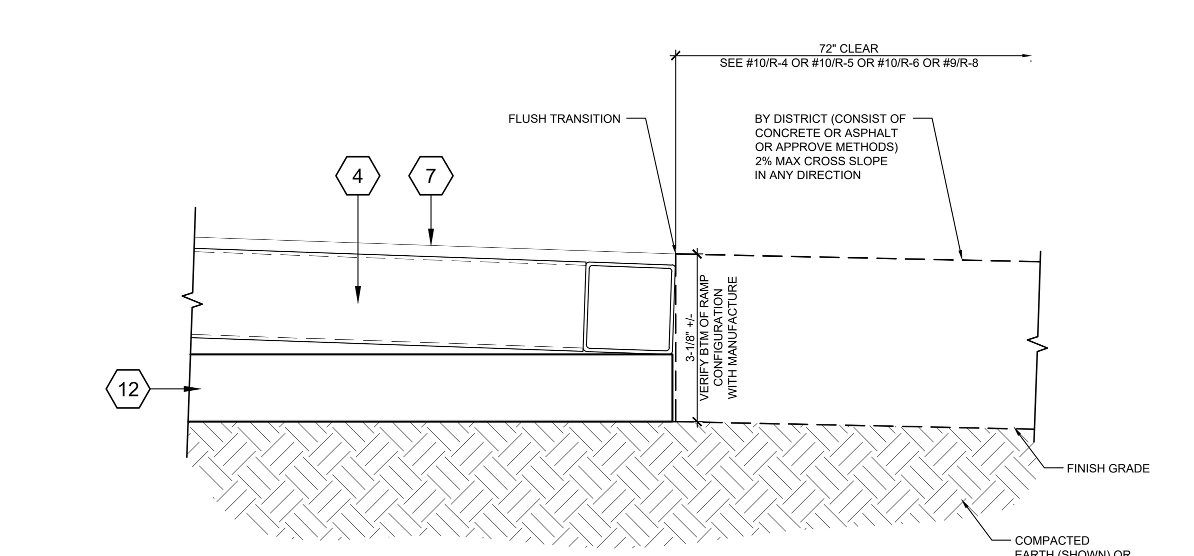


## FINISH GRADE TRANSITION 15
SCALE: 6" = 1'-0"

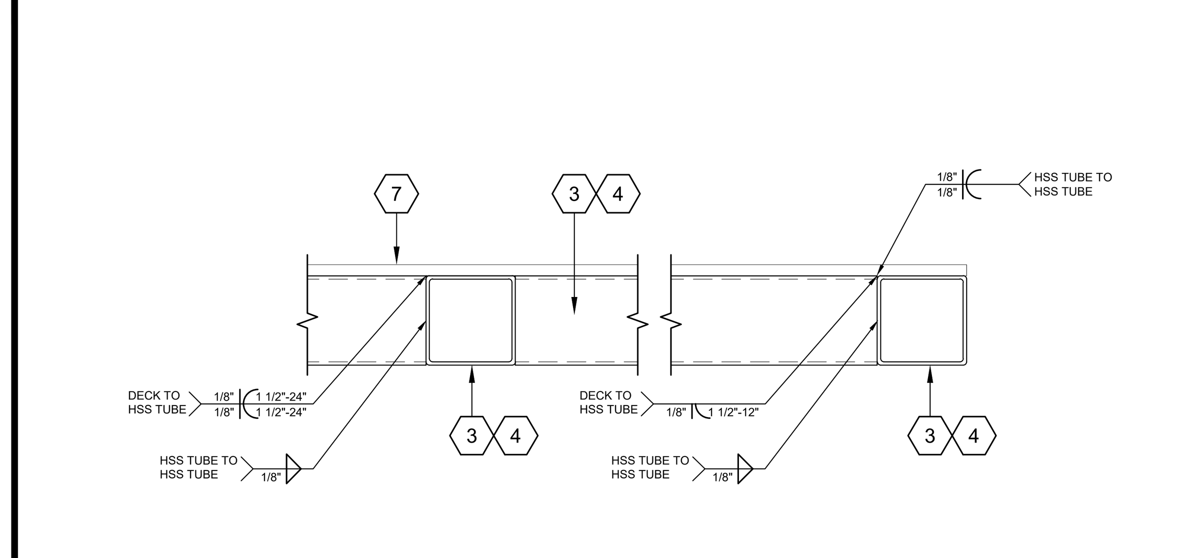


## DECK TO FRAME 10
SCALE: 6" = 1'-0"

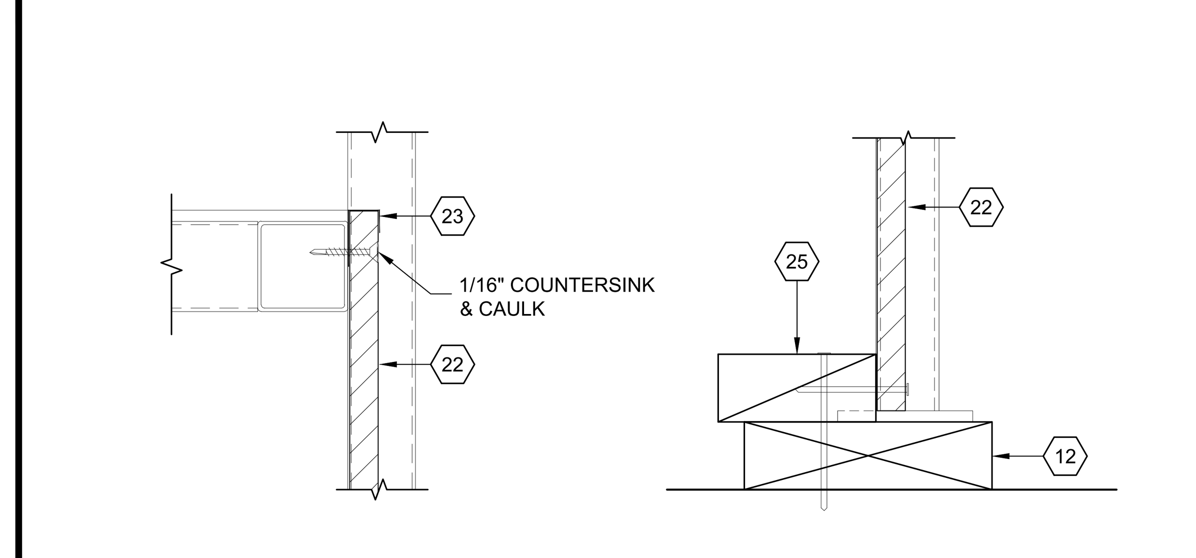


## SKIRTING INSTALLATION 5
SCALE: 6" = 1'-0"

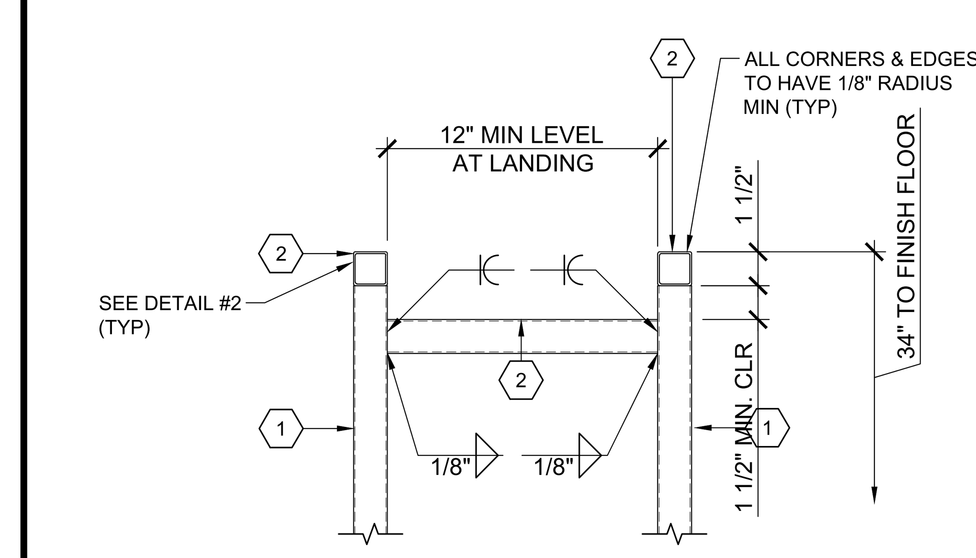


## RAMP AND DECK HANDRAIL 19
SCALE: 1-1/2" = 1'-0"

## KEY NOTES

1. VERTICAL RAIL POST TUBE: 1 1/2" X 1 1/2" X 14 GA MIN (T = 0.075") SQUARE TUBE.
2. HANDRAIL TUBE: 1 1/2" X 1 1/2" X 16 GA MIN (T =0.060") SQUARE TUBE
3. STAIR TREAD AND RISER TUBE: 2" X 2" X 14 GA MIN (T = 0.075") SQUARE TUBE
4. LANDING JOIST & PERIMETER TUBE: 2" X 2" X 14 GA MIN (T = 0.075") SQUARE TUBE
5. 10 GA. HANDRAIL MOUNTING BRACKET: 1/4" X 3" LAG SCREW AT WOOD STUD BUILDING OR #14 X 2" TEK SCREW AT METAL STUD BUILDING
6. NOT USED
7. 12 GA METAL DECK (0.105"): NON-SLIP SURFACE MAINTAINABLE FOR 1 YEAR. SEE ACCESS NOTES #5 AND DETAIL #4 ON SHEET R-9.
8. 6" X 12" X 0.135" STEEL PLATE AT LANDINGS. TO SECURE PLATE TO STRUCTURAL FLOOR FRAME, USE (2) #14 X 1-1/2" TEK SCREWS. TO SECURE PLATE TO BUILDING, USE (2) #14 X 2" TEK SCREWS FOR METAL STUD BUILDING OR (2) 1/4" X 3" LAG SCREWS FOR WOOD STUD BUILDING
9. WHEELCHAIR GUIDE RAILS: 1" X 1" X 14 GA MIN (t = 0.075") SQUARE TUBE
10. 3/8"Ø ZINC MACHINE BOLT WITH NUT
11. 2" X 4" 0.135" THICK BASE PLATE. DRILL (2) 5/16" HOLES FOR (2) 1/4"Ø X 1-1/2" GALV LAG SCREWS
12. 2 X HF #2 MIN PRESSURE TREATED SILL PLATE
13. 1"Ø X 14" STANDARD WEIGHT HOT DIPPED GALVANIZED PIPE AT 10'-0" OC MAX, 2'-0"MAX FROM EACH CORNER IN BOTH DIRECTIONS AND A MINIMUM OF TWO PIPES PERDISCONTINUE FOUNDATION STRIP PER DSA IR 16-1 SECTION 3.2.3.5 DRILL SILL PLATE 1 1/2"Ø MAX HOLE PIPE SHOULD PENETRATE INTO SOIL AND/OR PAVING A MIN OF 12" MEASURED VERTICALLY PIPES SHALL BE INSTALLED ON A CONTINUOUS PLATE.
14. ADJUSTABLE LEGS: 1-1/4" X 1-1/4" X 0.105" SQUARE TUBE WELDED TO BASE PLATE
15. 6" X LENGTH OF RAMP X 0.135" CONT PLATE. TO SECURE PLATE TO BUILDING, USE 1/4" X 3" LAG SCREWS. TO SECURE PLATE TO STRUCTURAL FLOOR FRAME, USE #14 X 2" TEK SCREWS. TO SECURE PLATE TO WOOD FOUNDATION, USE 1/4" X 3" LAG SCREWS. ALL FASTENER SPACING SHALL BE AT 9" OC MAX
16. L-1 1/2" X 1-1/2" X 3/16" X WIDTH OF RAMP
17. 2" X 1/8" CONTINUOUS PLATE
18. NOT USED
19. NOT USED
20. NOT USED
21. THIS BLOCKING IS PART OF THE BUILDING. WOOD BLOCKING 4X BLOCKING X STUD DEPTH W/ A34 t&b EA. END, FOR METAL STUD 16GA "C" FLAT BLOCKING W/ (3)-#10SMS TO EA. STUD.
22. 1/2" MINIMUM PLYWOOD SKIRTING OR 5/8" SIDING. FINISH TO MATCH SIDING. ATTACH SIDING TO TUBE STEEL WITH #14 X 1-1/2" FH SCREWS AT 6" OC AND TO 2X NAILER WITH 8D HOT-DIPPED GALVANIZED NAILS AT 6" OC
23. 26 GA MIN "J" FLASHING
24. 3" X 1" X 3'-0" X 10 GA BENT PLATE (0.135")
25. 2X NAILED TO SILL PLATE WITH 16D HOT-DIPPED GALVANIZED NAILS AT 16" OC MAX. ALT: #10 X 3" MIN EXTERIOR WOOD SCREWS

STATE AGENCY APPROVAL


SKC COMPANY
15345 FAIRFIELD RANCH RD - SUITE 160 CHINO HILLS, CA 91709
OFFICE: (909) 740-3120, FAX: (909) 726-9470
WEBSITE: WWW.SKCCOMPANY.COM
MANUFACTURER #MF1279666 GC LIC # 992118
DEALER # DL1279666 SBE CERTIFIED



ALL DESIGNS INDICATED ON THESE PLANS/DRAWINGS ARE PROPERTY OF SKC, INC AND ARE FOR THE USE BY SKC IN THE SPECIFIED JOB ONLY. THEY SHALL NOT BE USED AND/OR DUPLICATED OR TRANSMITTED IN ANY FORM, FOR ANY PURPOSE WITHOUT THE PRIOR WRITTEN CONSENT OF SKC, INC. ANY UNAUTHORIZED USE OF THESE PLANS SHALL SUBJECT THE OWNER OF SAID PROPERTY TO LIQUIDATED DAMAGES OF $75,000.00. THESE PLANS ARE PROTECTED UNDER THE PROVISIONS OF THE 1976 COPYRIGHT ACT COPYRIGHT SKC, © ALL RIGHTS RESERVED.


DISTRICT/CUSTOMER NAME:

SCHOOL/SITE NAME:

SHEET TITLE:

RAMP & LANDING DETAILS

PRE-CHECK (PC) DOCUMENT
CODE: 2022 CBC
A SEPARATE PROJECT APPLICATION FOR CONSTRUCTION IS REQUIRED

APPROVED
DIV. OF THE STATE ARCHITECT
APP: 04-122029 PC
REVIEWED FOR
SS ☑ FLS ☑ ACS ☑ CG ☐
DATE: 09/27/2023

PROFESSIONAL OF RECORD ON PC


ORION Structural Engineering, Inc.
11305 RANCHO BERNARDO RD SUITE 121
SAN DIEGO CA. 92127
PHONE (858) 679-1974
REGISTERED PROFESSIONAL ENGINEER RYAN J. OMER NO. S 4437 EXP. 12/31/24 STRUCTURAL STATE OF CALIFORNIA

FIRM: ORION STRUCTURAL ENGINEERING, INC.
ADDRESS: 11305 RANCHO BERNARDO ROAD, SUITE 121
CITY: SAN DIEGO, CA 92127
PHONE: (858) 679-1974


PROJECT SPECIFIC PROFESSIONAL OF RECORD

FIRM:
ADDRESS:
CITY:
PHONE:

REVISIONS

1 -
2 -
3 -
4 -
5 -

| | |
|---|---|
| PROJECT NO.: | 00-0000 |
| DRAFTER: | 00 |
| SCALE: | AS NOTED |
| DATE: | 00-00-00 |

SHEET NUMBER

# R-9

9/26/2023 9:29:37 AM