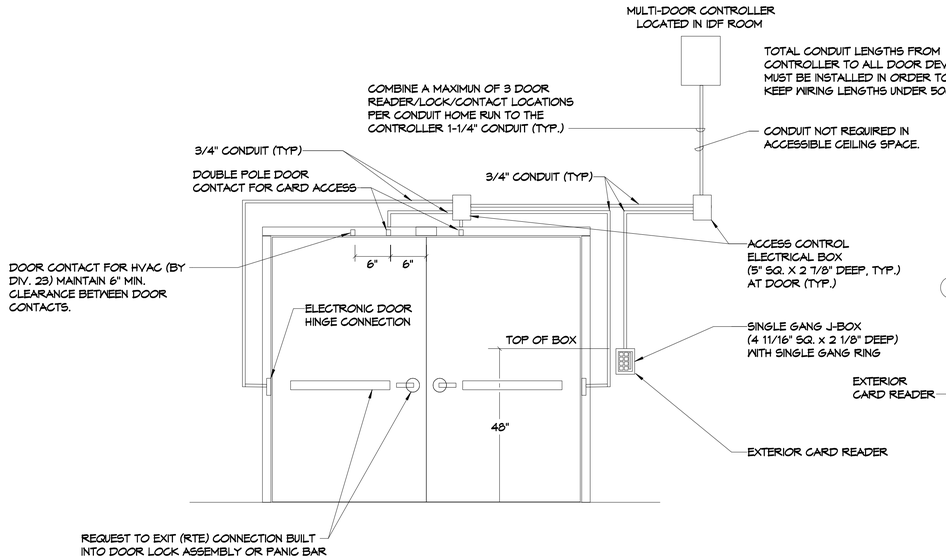

TYPICAL ACCESS CONTROL REQUIREMENTS-DOUBLE DOOR-EXTERIOR READER (1 / E4.13)

NO SCALE

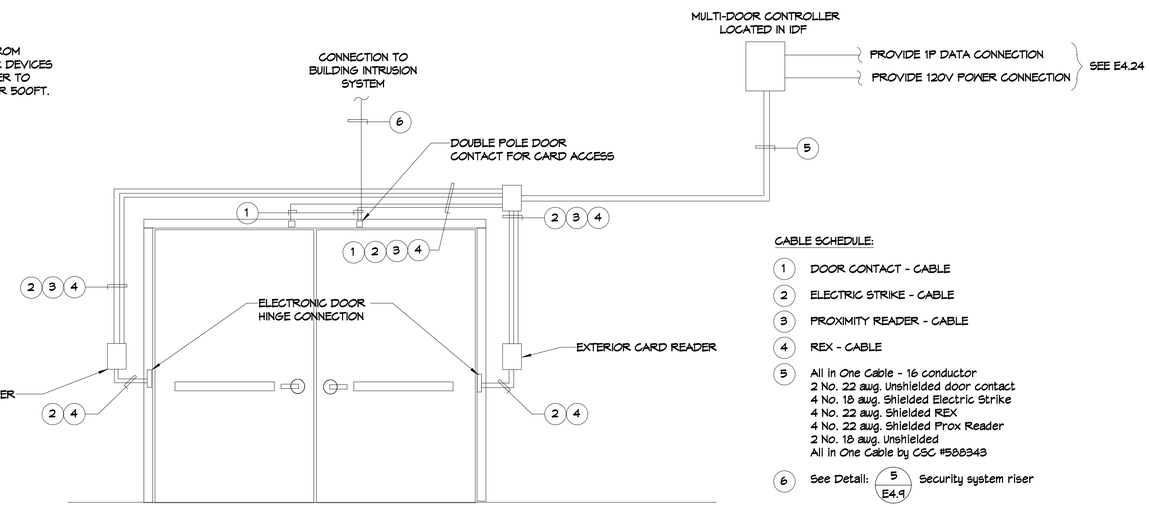

CABLE SCHEDULE:

1. DOOR CONTACT - CABLE
2. ELECTRIC STRIKE - CABLE
3. PROXIMITY READER - CABLE
4. REX - CABLE
5. All in One Cable - 16 conductor
   2 No. 22 awg. Unshielded door contact
   4 No. 18 awg. Shielded Electric Strike
   4 No. 22 awg. Shielded REX
   4 No. 22 awg. Shielded Prox Reader
   2 No. 18 awg. Unshielded
   All in One Cable by CSC #588343
6. See Detail: 5 / E4.9 Security system riser

TYPICAL ACCESS CONTROL REQUIREMENTS-DOUBLE DOOR INSTALLATION (2 / E4.13)

NO SCALE

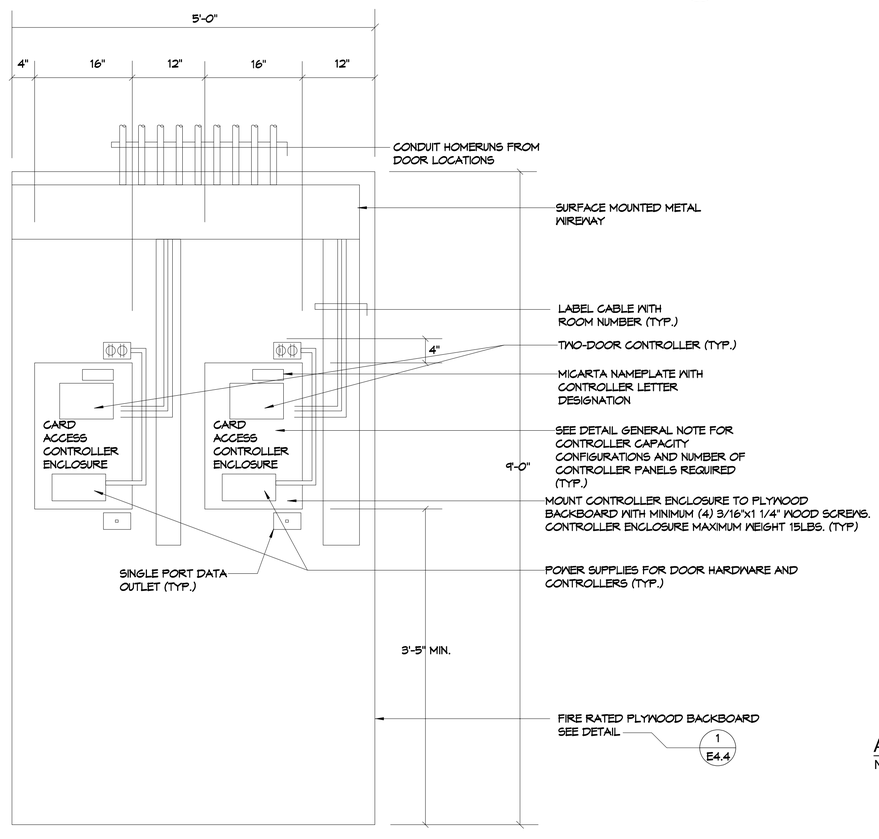

DETAIL GENERAL NOTES:

1. CONTROLLER PANELS SHALL BE CONFIGURATED FOR A MAXIMUM OF 2 DOORS.

TYPICAL CARD ACCESS CONTROLLER MOUNTING (1-2) CONTROLLER PANEL (3 / E4.13)

NO SCALE

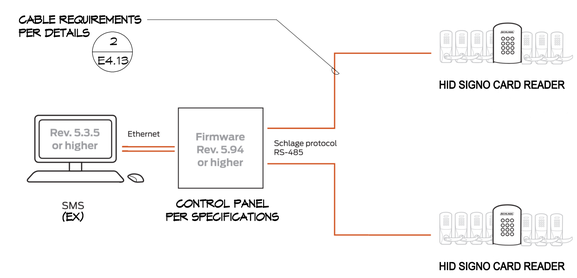

ACCESS CONTROL WIRED SYSTEM DIAGRAM-NEW BUILDING (4 / E4.13)

NO SCALE

REGISTERED PROFESSIONAL ENGINEER — MONICA GOESEWINSKI — No. E 14781 — Exp. 6-30-2027 — ELECTRICAL — STATE OF CALIFORNIA

#21116 8/4/2023

JOHNSON CONSULTING ENGINEERS, INC.
Power | Lighting | Multimedia
Communications | Data Networking
12875 Brookprinter Place, Suite 300
Poway, CA 92064
P 858.679.4030 | F 858.513.0559
www.jce-inc.com

ARCHITECT
westbergwhite architecture
1775 HANCOCK ST, SUITE 120
SAN DIEGO, CA 92110
619.542.1188 619.542.1663 FAX

LICENSED ARCHITECT — FRISCO WHITE — C-9090 — EXP. 10-2025 — STATE OF CALIFORNIA

CONSULTANT

City of La Puente
15900 E. MAIN ST, LA PUENTE, CA. 91744

ACCESS CONTROL SYSTEM DETAILS

La Puente ACTIVITY CENTER
501 GLENDORA AVE, LA PUENTE, CA. 91744

PROJECT NO.: 22008
R.S. A.P.
FILE NAME
DATE: 12/05/2025 DRAWN CHECKED
REVISIONS
SHEET NO. E4.13 OF SHEETS

CITY APPROVAL

N:\2021\21116\N\005-E4.13-21116.dwg Oct 09, 2025 - 4:19pm ychang

FIRE ALARM NOTE:
THIS FIRE ALARM DESIGN SHALL BE A COMPLETE PLAN SUBMITTAL IN ACCORDANCE WITH 2022 CBC 907.1.

FULLY AUTOMATIC FIRE ALARM DESIGN:
THIS PROJECT SHALL BE DESIGNED TO COMPLY WITH ALL REQUIREMENTS FOR A FULLY PROTECTED AUTOMATIC FIRE ALARM SYSTEM.

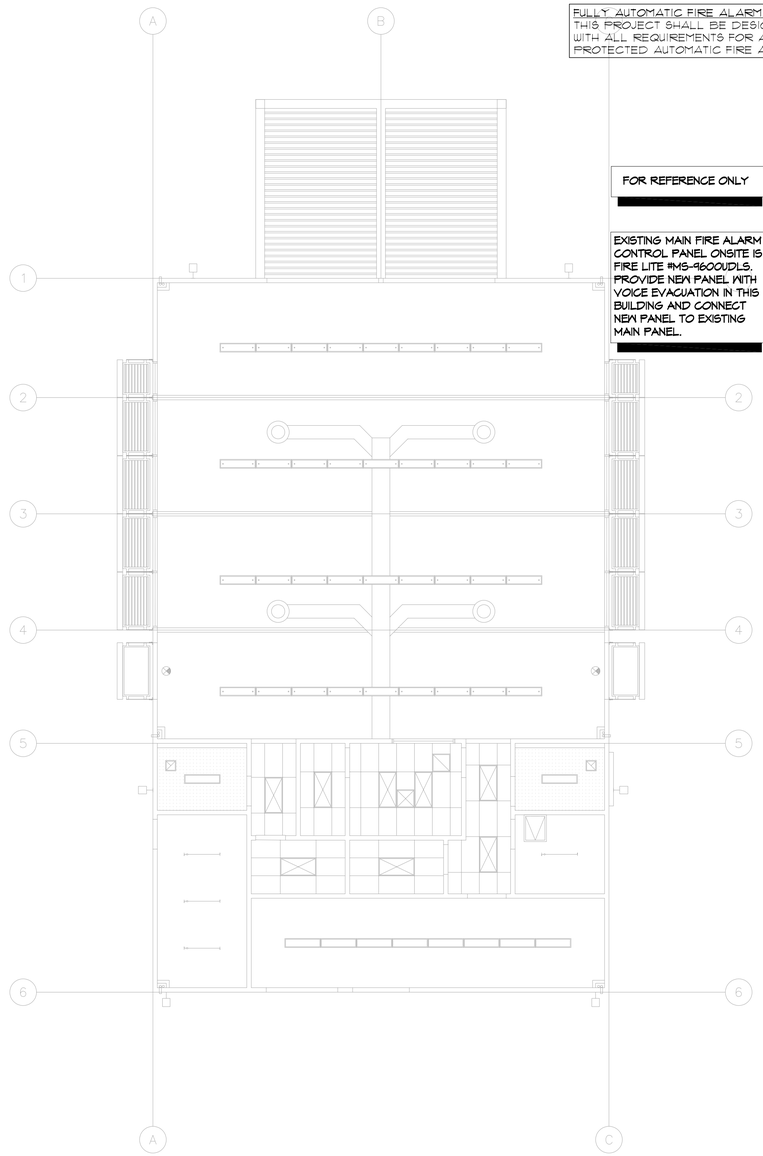

FOR REFERENCE ONLY

[redacted]

EXISTING MAIN FIRE ALARM CONTROL PANEL ONSITE IS FIRE LITE #MS-9600UDLS. PROVIDE NEW PANEL WITH VOICE EVACUATION IN THIS BUILDING AND CONNECT NEW PANEL TO EXISTING MAIN PANEL.

[redacted]

FIRE ALARM SYSTEM:

DEFERRED APPROVAL

FIRE ALARM CONTRACTOR SHALL BE RESPONSIBLE FOR INSTALLING A COMPLETE AND OPERABLE FIRE ALARM SYSTEM. FIRE ALARM SYSTEM SHALL BE AS PER APPLICABLE CODES. FIRE ALARM CONTRACTOR SHALL SUBMIT FOR REVIEW A COMPLETE FIRE ALARM SYSTEM DESIGN, INCLUDING DEVICES, LAYOUT, BATTERY CALCULATIONS, WIRING AND CONDUIT, VOLTAGE DROP CALCULATIONS AND OBTAIN APPROVAL FROM THE LOCAL AUTHORITY HAVING JURISDICTION, PRIOR TO INSTALLATION.

[redacted]

FIRE ALARM MONITORING NOTE:

1. AUTOMATIC FIRE ALARM SYSTEMS SHALL TRANSMIT THE ALARM, SUPERVISORY AND TROUBLE SIGNALS TO AN APPROVED SUPERVISING STATION AS REQUIRED BY NFPA 72 AS AMENDED BY CFC SECTION 907. THE SUPERVISING STATION SHALL BE LISTED AS EITHER UUFX OR UUJS BY UNDERWRITERS LABORATORY OR SHALL MEET THE REQUIREMENTS OF FACTORY MUTUAL RESEARCH APPROVAL STANDARD 3011. SUPERVISION OF SYSTEM AND LEASED TELEPHONE LINES SHALL BE ARRANGED BY OWNER.

FIRE ALARM GENERAL REQUIREMENTS:

1. THE COMPLETE INSTALLATION SHALL BE REVIEWED AND APPROVED BY THE ABOVE LOCAL MANUFACTURERS REPRESENTATIVE.
2. UNLESS OTHERWISE NOTED SOLID LINES BETWEEN DEVICES SHALL BE 3/4" E.M.T. ROUTED CONCEALED ABOVE CEILINGS OR IN WALLS. DASHED LINES INDICATE 3/4" P.V.C. UNDERGROUND CONDUIT. ALL WIRING TYPES AND QUANITITES SHOWN ARE FOR INFORMATION ONLY. THE CONTRACTOR SHALL PROVIDE ALL WIRING AS REQUIRED TO MAKE A FULLY OPERATIONAL SYSTEM. SHOP DRAWINGS AND OR AS-BUILT DOCUMENTS SHALL INDICATE ALL WIRING PROVIDED.
3. THE AUDIBILITY OF FIRE ALARM WARNING DEVICES SHALL BE AUDIBLE THROUGH THE OCCUPANCY WITH A MINIMAL SOUND LEVEL 15 db's OVER THE AMBIENT NOISE LEVEL. ADD ADDITIONAL DEVICES AS REQUIRED.
4. UPON COMPLETION OF THE INSTALLATION OF THE FIRE ALARM SYSTEM, A REACCEPTANCE TEST OF THE ENTIRE SYSTEM SHALL BE PERFORMED IN THE PRESENCE OF THE ENFORCING AGENCY AND IN ACCORDANCE WITH SPECIFICATIONS (28 30 00). THE CONTRACTOR SHALL FURNISH db METERS AND ALL OTHER EQUIPMENT TO PERFORM THESE TESTS.
5. ALL CONDUIT PENETRATIONS THROUGH FIRE RATED PARTITIONS SHALL PREVENT THE PASSAGE OF HEAT, SMOKE AND FIRE GASES. ALL PENETRATIONS SHALL COMPLY WITH U.L. ASSEMBLY WL-1001. REFER TO THROUGH-PENETRATION FIRESTOP DETAIL ON THE DETAIL SHEET.
6. ALL OPERATING HARDWARE AT INITIATING DEVICES SHALL NOT REQUIRE TIGHT GRASPING, PINCHING OR TWISTING OF THE WRIST, AND THE FORCE REQUIRED TO OPERATE SHALL BE LESS THAN 5 POUNDS.

GENERAL NOTES:

1. REFERENCE ARCHITECTURAL INTERIOR ELEVATIONS FOR EXACT LOCATION OF ALL WALL MOUNTED DEVICES.
2. REFERENCE E5 AND E8 SERIES SHEETS FOR TYPICAL CONDUIT AND BACKBOX INSTALLATION DETAILS.
3. REFERENCE RISER DIAGRAMS FOR TYPICAL CONDUIT SIZES AND INITIATION ZONE CIRCUIT IDENTIFICATIONS.
4. REFERENCE MECHANICAL PLANS FOR EXACT LOCTION OF ALL DUCT DETECTORS AND SMOKE DAMPER LOCATIONS.
5. UNLESS OTHERWISE NOTED SOLID LINES BETWEEN DEVICES SHALL BE 1" E.M.T. ROUTED CONCEALED ABOVE CEILINGS OR IN WALLS. DASHED LINES INDICATE 1" P.V.C. UNDERGROUND CONDUIT. ALL WIRING TO BE PROVIDED PER MANUFACTURER SHOP DRAWINGS.
6. CONTRACTOR SHALL PROVIDE CEILING ACCESS PANEL AT ALL NON-LAYIN TYPE CEILINGS, WHERE HEAT DETECTOR ABOVE CEILING IS INDICATED.
7. PROVIDE WIRE PROTECTIVE GUARD OVER ALL FIRE ALARM DEVICES LOCATED IN THE FOLLOWING AREAS: GYMNASIUM, LOCKER ROOMS, SHOP AREAS, AND ANY OTHER AREA WHERE DEVICES MAY BE SUBJECT TO CONTACT.

FLOOR PLAN - FIRE ALARM | 1/8" = 1'-0" | 1

REGISTERED PROFESSIONAL ENGINEER
MONICA GOESE-HANSEN
No. E 14781
Exp. 6-30-2027
ELECTRICAL
STATE OF CALIFORNIA

#21116 4/10/2025

JOHNSON
CONSULTING ENGINEERS, INC.
Power | Lighting | Multimedia
Communications | Data Networking
12875 Brookprinter Place, Suite 300
Poway, CA 92064
P 858.679.4030 | F 858.513.0559
www.jce-inc.com

ARCHITECT
westbergwhite architecture
1775 HANCOCK ST, SUITE 120
SAN DIEGO, CA 92110
619.542.1188 619.542.1663 FAX

LICENSED ARCHITECT
FRASCO WHITE
C-9090
EXP. 10-2025
STATE OF CALIFORNIA

CONSULTANT

City of La Puente
15900 E. MAIN ST. LA PUENTE, CA. 91744

FLOOR PLAN - FIRE ALARM

La Puente ACTIVITY CENTER
501 GLENDORA AVE. LA PUENTE, CA. 91744

PROJECT NO.: 22008
R.S. A.P.
FILE NAME
DATE: 12/05/2025 DRAWN
CHECKED
REVISIONS
SHEET NO.
E5.1
OF SHEETS

CITY APPROVAL

N:\2021\21116WW\005-E5.1-21116.dwg Oct 09, 2025 - 4:19pm yzhang

GENERAL NOTES:

1. REFERENCE MECHANICAL PLANS FOR EXACT EQUIPMENT LOCATIONS PRIOR TO ROUGH-IN.
2. DASHED EQUIPMENT INDICATES THAT EQUIPMENT IS LOCATED WITHIN CEILING SPACE. ALL OTHER EQUIPMENT IS ROOF MOUNTED (U.O.N.).
3. ALL CONDUIT FEEDERS TO ROOF MOUNTED EQUIPMENT SHALL BE RUN CONCEALED IN CEILING SPACE WHERE EQUIPMENT CURBS ARE PROVIDED. ROUTE FEEDER UP THROUGH CURB TO EQUIPMENT DISCONNECT.
4. REFERENCE SHEET E6 SERIES MECHANICAL EQUIPMENT SCHEDULE FOR CONDUIT, WIRE AND DISCONNECT REQUIREMENTS.

KEY NOTES:

1. ROOF HATCH SECURITY CONTACT PROVIDE 3/4" CONDUIT TO BUILDING COMMUNICATIONS CABINET.

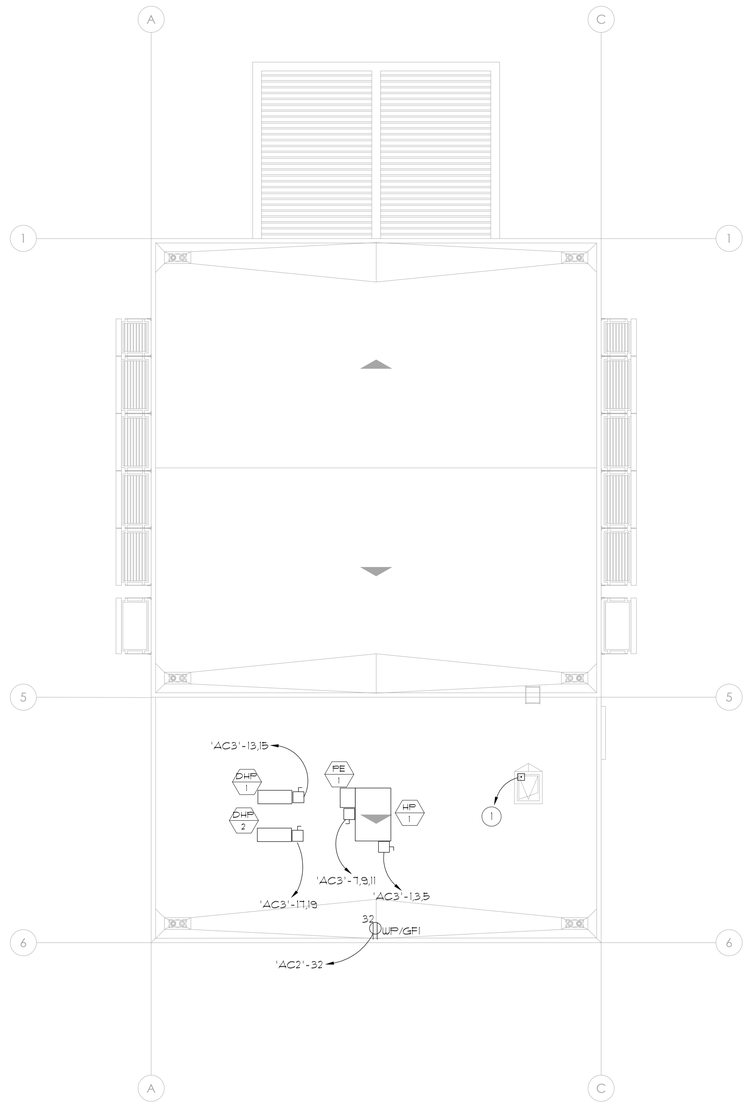

ROOF PLAN | 1/8" = 1'-0" | 1

REGISTERED PROFESSIONAL ENGINEER
MONICA GOESE-HAGER
No. E 14781
Exp. 6-30-2027
ELECTRICAL
STATE OF CALIFORNIA

#21116 4/10/2025

JOHNSON CONSULTING ENGINEERS, INC.
Power | Lighting | Multimedia
Communications | Data Networking
12875 Brookprinter Place, Suite 300
Poway, CA 92064
P 858.679.4030 | F 858.513.0559
www.jce-inc.com

ARCHITECT

westbergwhite architecture
1775 HANCOCK ST, SUITE 120
SAN DIEGO, CA 92110
619.542.1188 619.542.1663 FAX

LICENSED ARCHITECT
FRASCO WHITE
C-9090
EXP. 10-2025
STATE OF CALIFORNIA

CONSULTANT

City of La Puente
15900 E. MAIN ST. LA PUENTE, CA. 91744

ROOF PLAN - FIRE ALARM

La Puente ACTIVITY CENTER
501 GLENDORA AVE. LA PUENTE, CA. 91744

PROJECT NO.: 22008
R.S. A.P.
FILE NAME
DATE: 12/05/2025 DRAWN
CHECKED
REVISIONS
SHEET NO. E6.1
OF SHEETS

CITY APPROVAL

N:\2021\211169W\006-E6.1-21116.dwg Oct 09, 2025 - 4:19pm yzhang

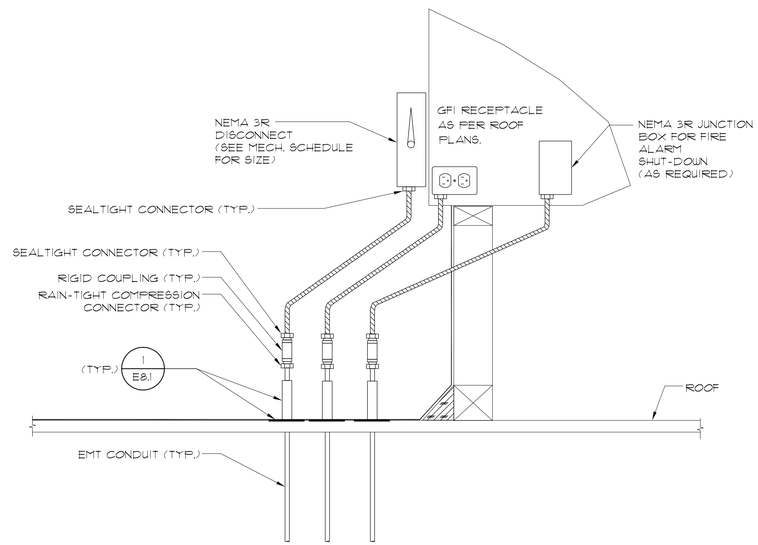

A/C UNIT CONNECTION DETAIL

NO SCALE

M31

1
E6.2

MECHANICAL EQUIPMENT SCHEDULE

MARK	VOLTAGE/ PHASE	CONDUIT/ WIRE	FUSE	DISC. SWITCH	PANEL	REMARKS
HP 1	208V/3PH	1-1/2"C, 4 #2, 1 #8 GND	80	100A /3P /3R	SEE PLAN	63 MCA
DHP 1	208V/1PH	1"C, 3 #10, 1 #10 GND	20	30A /3P /3R	SEE PLAN	16 MCA
DHP 2	208V/1PH	1"C, 3 #10, 1 #10 GND	20	30A /3P /3R	SEE PLAN	16 MCA
DFC 1	208V/1PH	1"C, 3 #10, 1 #10 GND	NA	MANUAL MOTOR STARTER SWITCH	SEE PLAN	FED FROM OUTDOOR UNIT
DFC 2	208V/1PH	1"C, 3 #10, 1 #10 GND	NA	MANUAL MOTOR STARTER SWITCH	SEE PLAN	FED FROM OUTDOOR UNIT
EF 1	120V/1PH	3/4"C, 2 #12, 1 #12 GND	NA	MANUAL MOTOR STARTER SWITCH	SEE PLAN	51 W
EF 2	120V/1PH	3/4"C, 2 #12, 1 #12 GND	NA	MANUAL MOTOR STARTER SWITCH	SEE PLAN	51 W
EF 3	120V/1PH	3/4"C, 2 #12, 1 #12 GND	NA	MANUAL MOTOR STARTER SWITCH	SEE PLAN	51 W
EF 4	120V/1PH	3/4"C, 2 #12, 1 #12 GND	NA	MANUAL MOTOR STARTER SWITCH	SEE PLAN	117 W

REGISTERED PROFESSIONAL ENGINEER
MONICA GOESE-HAGEN
No. E 14781
Exp. 6-30-2027
ELECTRICAL
STATE OF CALIFORNIA

#21116 4/9/2025

JOHNSON CONSULTING ENGINEERS, INC.
Power | Lighting | Multimedia
Communications | Data Networking
12875 Brookprinter Place, Suite 300
Poway, CA 92064
P 858.679.4030 | F 858.513.0559
www.jce-inc.com

ARCHITECT

westbergwhite architecture
1775 HANCOCK ST, SUITE 120
SAN DIEGO, CA 92110
619.542.1188 619.542.1663 FAX

LICENSED ARCHITECT
FRASCO WHITE
C-9090
EXP. 10-2025
STATE OF CALIFORNIA

CONSULTANT

City of La Puente

15900 E. MAIN ST. LA PUENTE, CA. 91744

A./C UNIT DETAILS AND MECHANICAL SCHEDULE

La Puente ACTIVITY CENTER

501 GLENDORA AVE. LA PUENTE, CA. 91744

PROJECT NO.: 22008
R.S. A.P.
FILE NAME
DATE: 12/05/2025 DRAWN CHECKED
REVISIONS
SHEET NO. E6.2
OF SHEETS

CITY APPROVAL

N:\2021\21116WW\006-E6.2-21116.dwg Oct 09, 2025 - 4:19pm ysiang

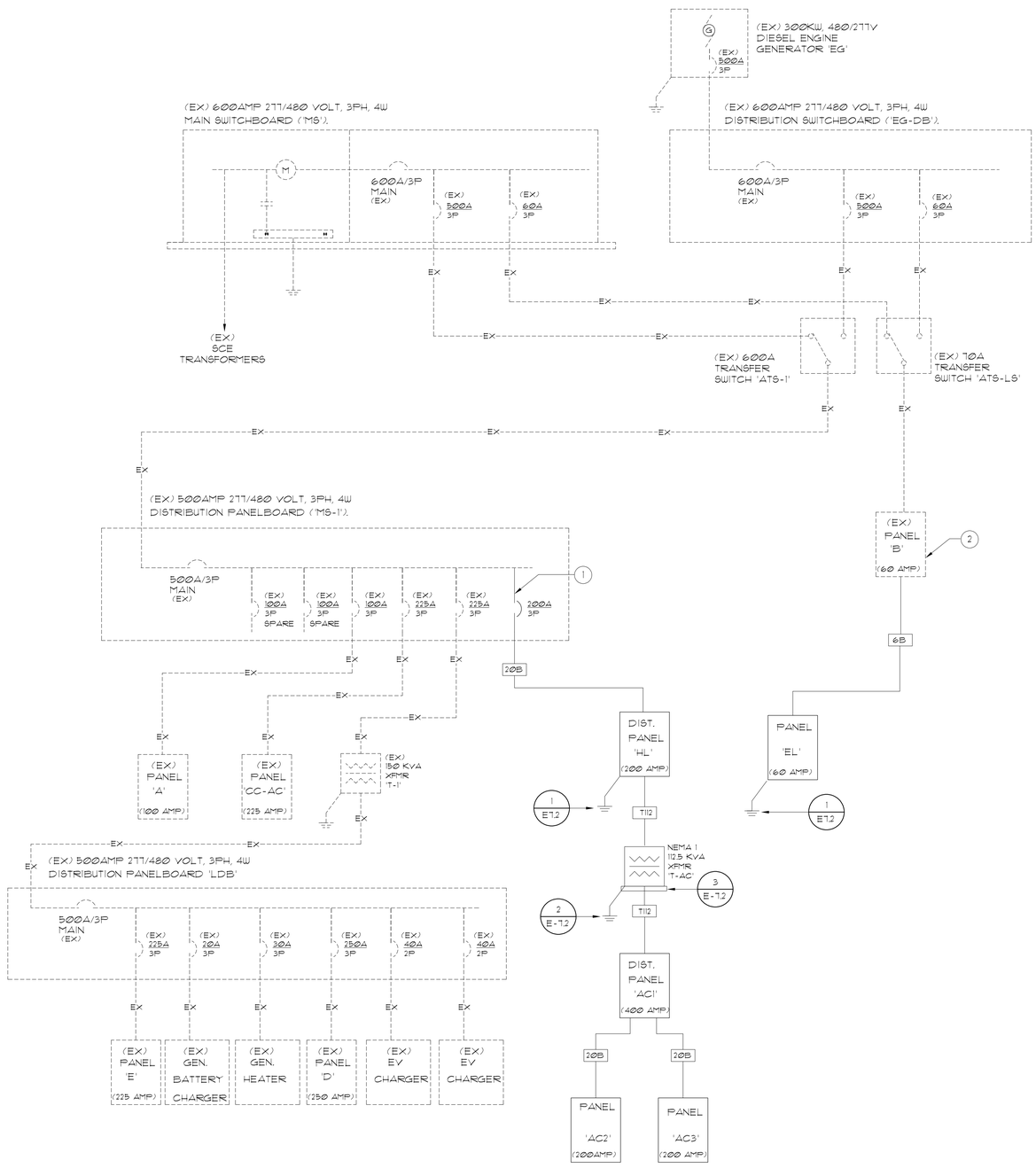

ELECTRICAL ONE-LINE DIAGRAM

NO SCALE

1 / E-7.1

600V FEEDER SCHEDULE LEGEND

MS — REFERENCE MECHANICAL EQUIPMENT SCHEDULE FOR SIZE — E-6.2

T75 — 'T' INDICATES TYPICAL TRANSFORMER FEEDER REFERENCE. THE NUMBER INDICATES TRANSFORMER TYPE. REFER TO SCHEDULE ON SHEET FOR SIZE REQUIRED. — 3 / E-7.2

2 | | 00

2 | | INDICATES QUANTITY OF CONDUITS REQUIRED = (2)

| 4 | INDICATES SIZE OF CONDUITS REQUIRED = 4"

| | 00 INDICATES 'CONDUIT ONLY'

600V FEEDER SCHEDULE GENERAL NOTES:

1. ALL CONDUCTOR SHALL BE PROVIDED WITH TYPE THWN-2 INSULATION. REFERENCE SPECIFICATION SECTION 26 05 19 (16120) FOR ADDITIONAL REQUIREMENTS.
2. PROVIDE 60 DEGREE COPPER/ALUMINUM RATED TERMINATION FOR ALL FEEDERS SIZED WITH #2 OR SMALLER CONDUCTORS. PROVIDE 75 DEGREE COPPER/ALUMINUM RATED TERMINATIONS FOR ALL FEEDERS SIZED WITH #1 OR LARGER CONDUCTORS.
3. CONTRACTOR SHALL BE RESPONSIBLE FOR ORDERING LUG CONFIGURATION AN ALL EQUIPMENT, BREAKER OF DISCONNECTS TO MATCH FEEDER CONFIGURATIONS INDICATED.
4. WHERE MULTIPLE CONDUIT QUANTITIES ARE INDICATED, CONDUCTOR QUANTITIES AND SIZES SHOWN IN SCHEDULE SHALL BE PROVIDED IN EACH CONDUIT.

GENERAL NOTES:

1. A FAULT CURRENT AND TIME CURRENT STUDY MUST BE PROVIDED AS DESCRIBED IN THE SPECIFICATIONS PRIOR TO FINAL APPROVAL OF THE POWER EQUIPMENT.
2. REFERENCE DETAIL FOR ALL EQUIPMENT FAULT CURRENT RATINGS. — 4 / E-7.2
3. UNLESS WHERE OTHERWISE NOTED, ALL WORK INDICATED ON THESE DRAWINGS SHALL BE CONSIDERED NEW WORK.
4. ALL ELECTRICAL GEAR AND EQUIPMENT SHOWN ON ONE-LINE DIAGRAM SHALL BE NEMA 3R UNLESS OTHERWISE NOTED.

KEY NOTES:

1. PROVIDE (1) 200A/3P BREAKER IN EXISTING SPACE.
2. PROVIDE (1) 60A/3P BREAKER IN EXISTING SPACE.

600Volt Feeder Schedule

I.D.	Type	Ampacity	Copper Conduit	Copper Conductors	Aluminum Conduit	Aluminum Conductors
2A		20	(1) 3/4"	3 # 12, 1# 12 Gnd	NA	NA
2B		20	(1) 3/4"	4 # 12, 1# 12 Gnd	NA	NA
3A		30	(1) 3/4"	3 # 10, 1# 10 Gnd	NA	NA
3B		30	(1) 3/4"	4 # 10, 1# 10 Gnd	NA	NA
4A		40	(1) 1"	3 # 8, 1# 10 Gnd	NA	NA
4B		40	(1) 1"	4 # 8, 1# 10 Gnd	NA	NA
5A		50	(1) 1"	3 # 6, 1# 10 Gnd	NA	NA
5B		50	(1) 1"	4 # 6, 1# 10 Gnd	NA	NA
6A		60	(1) 1 1/4"	3 # 4, 1# 8 Gnd	NA	NA
6B		60	(1) 1 1/4"	4 # 4, 1# 8 Gnd	NA	NA
7A		70	(1) 1 1/4"	3 # 4, 1# 8 Gnd	NA	NA
7B		70	(1) 1 1/4"	4 # 4, 1# 8 Gnd	NA	NA
8A		80	(1) 1 1/4"	3 # 3, 1# 8 Gnd	NA	NA
8B		80	(1) 1 1/4"	4 # 3, 1# 8 Gnd	NA	NA
9A		90	(1) 1 1/2"	3 # 2, 1# 8 Gnd	NA	NA
9B		90	(1) 1 1/2"	4 # 2, 1# 8 Gnd	NA	NA
10A		100	(1) 1 1/2"	3 # 1, 1# 6 Gnd	NA	NA
10B		100	(1) 1 1/2"	4 # 1, 1# 6 Gnd	NA	NA
12A		125	(1) 2"	3 # 1, 1# 6 Gnd	(1) 2"	3 # 2/0, 1# 3 Gnd
12B		125	(1) 2"	4 # 1, 1# 6 Gnd	(1) 2"	4 # 2/0, 1# 3 Gnd
15A		150	(1) 2"	3 # 1/0, 1# 6 Gnd	(1) 2"	3 # 3/0, 1# 3 Gnd
15B		150	(1) 2"	4 # 1/0, 1# 6 Gnd	(1) 2"	4 # 3/0, 1# 3 Gnd
17A		175	(1) 2"	3 # 2/0, 1# 6 Gnd	(1) 2"	3 # 4/0, 1# 3 Gnd
17B		175	(1) 2"	4 # 2/0, 1# 6 Gnd	(1) 2"	4 # 4/0, 1# 3 Gnd
20A		200	(1) 3"	3 # 3/0, 1# 4 Gnd	(1) 3"	3 # 250, 1# 2 Gnd
20B		200	(1) 3"	4 # 3/0, 1# 4 Gnd	(1) 3"	4 # 250, 1# 2 Gnd
22A		225	(1) 3"	3 # 4/0, 1# 4 Gnd	(1) 3"	3 # 300, 1# 2 Gnd
22B		225	(1) 3"	4 # 4/0, 1# 4 Gnd	(1) 3"	4 # 300, 1# 2 Gnd
25A		250	(1) 3"	3 # 250, 1# 4 Gnd	(1) 3"	3 # 350, 1# 2 Gnd
25B		250	(1) 3"	4 # 250, 1# 4 Gnd	(1) 3"	4 # 350, 1# 2 Gnd
30A		300	(1) 3"	3 # 350, 1# 4 Gnd	(1) 3"	3 # 500, 1# 2 Gnd
30B		300	(1) 3"	4 # 350, 1# 4 Gnd	(1) 3"	4 # 500, 1# 2 Gnd
35A		350	(2) 2"	3 # 2/0, 1# 2 Gnd	(2) 2"	3 # 4/0, 1# 1 Gnd
35B		350	(2) 2"	4 # 2/0, 1# 2 Gnd	(2) 2"	4 # 4/0, 1# 1 Gnd
40A		400	(2) 3"	3 # 3/0, 1# 2 Gnd	(2) 3"	3 # 250, 1# 1/0 Gnd
40B		400	(2) 3"	4 # 3/0, 1# 2 Gnd	(2) 3"	4 # 250, 1# 1/0 Gnd
45A		450	(2) 3"	3 # 4/0, 1# 2 Gnd	(2) 3"	3 # 300, 1# 1/0 Gnd
45B		450	(2) 3"	4 # 4/0, 1# 2 Gnd	(2) 3"	4 # 300, 1# 1/0 Gnd
50A		500	(2) 3"	3 # 250, 1# 2 Gnd	(2) 3"	3 # 350, 1# 1/0 Gnd
50B		500	(2) 3"	4 # 250, 1# 2 Gnd	(2) 3"	4 # 350, 1# 1/0 Gnd
60A		600	(2) 3"	3 # 350, 1# 1 Gnd	(2) 3"	3 # 500, 1# 2/0 Gnd
60B		600	(2) 3"	4 # 350, 1# 1 Gnd	(2) 3"	4 # 500, 1# 2/0 Gnd
70A		700	(3) 3"	3 # 4/0, 1# 1/0 Gnd	(3) 3"	3 # 300, 1# 3/0 Gnd
70B		700	(3) 3"	4 # 4/0, 1# 1/0 Gnd	(3) 3"	4 # 300, 1# 3/0 Gnd
80A		800	(3) 3"	3 # 300, 1# 1/0 Gnd	(3) 3"	3 # 500, 1# 3/0 Gnd
80B		800	(3) 3"	4 # 300, 1# 1/0 Gnd	(3) 3"	4 # 500, 1# 3/0 Gnd
100B		1000	(4) 3"	4 # 250, 1# 2/0 Gnd	(4) 3"	4 # 400, 1# 4/0 Gnd
120B		1200	(4) 4"	4 # 350, 1# 3/0 Gnd	(4) 4"	4 # 500, 1# 250 Gnd
160B		1600	(5) 4"	4 # 400, 1# 4/0 Gnd	(5) 4"	4 # 600, 1# 350 Gnd
200B		2000	(6) 4"	4 # 500, 1# 250 Gnd	(6) 4"	4 # 600, 1# 400 Gnd
250B		2500	(7) 4"	4 # 500, 1# 350 Gnd	(7) 4"	4 # 750, 1# 600 Gnd
300B		3000	(8) 4"	4 # 500, 1# 350 Gnd	(8) 4"	4 # 750, 1# 600 Gnd
350B		3500	(12) 4"	4 # 350, 1# 400 Gnd	(12) 4"	4 # 500, 1# 600 Gnd
400B		4000	(12) 4"	4 # 400, 1# 400 Gnd	(12) 4"	4 # 600, 1# 750 Gnd

REGISTERED PROFESSIONAL ENGINEER — MONICA GOESEWINKEL — No. E 14781 — Exp. 6-30-2027 — ELECTRICAL — STATE OF CALIFORNIA

#21116 4/10/2025

JOHNSON CONSULTING ENGINEERS, INC.
Power | Lighting | Multimedia
Communications | Data Networking
12875 Brookprinter Place, Suite 300
Poway, CA 92064
P 858.679.4030 | F 858.513.0559
www.jce-inc.com

ARCHITECT
westbergwhite architecture
1775 HANCOCK ST, SUITE 120
SAN DIEGO, CA 92110
619.542.1188 619.542.1663 FAX
LICENSED ARCHITECT — FRASCO WHITE — C-9090 — EXP. 10-2025 — STATE OF CALIFORNIA

CONSULTANT

City of La Puente
15900 E. MAIN ST. LA PUENTE, CA. 91744

ONE LINE DIAGRAM

La Puente
ACTIVITY CENTER
501 GLENDORA AVE. LA PUENTE, CA. 91744

PROJECT NO.: 22008
R.S. A.P.
FILE NAME
DATE: 12/05/2025 DRAWN
CHECKED
REVISIONS SHEET NO.
E7.1
OF SHEETS

CITY APPROVAL

N:\2021\21116WWCOT-E7.1-21116.dwg Oct 09, 2025 - 4:19pm ythang

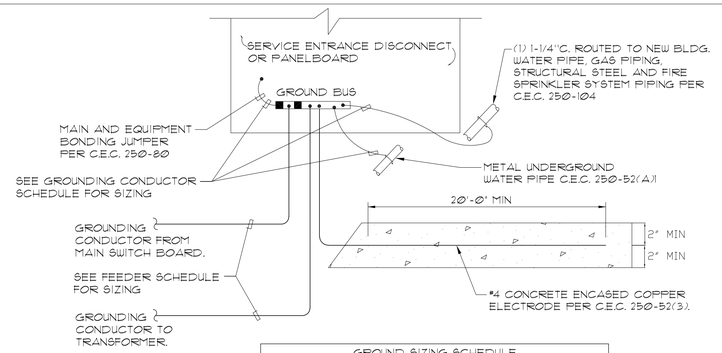

GROUND SIZING SCHEDULE	
EQUIPMENT AMPACITY	GROUNDING CONDUCTOR SIZE
0 - 200 AMPS	#4 CU.
201 - 400 AMPS	#1/0 CU.
401 - 800 AMPS	#2/0 CU.
801 - 1200 AMPS	#3/0 CU.
1201 - 2000 AMPS	#250 CU.
2001 - 4000 AMPS	#350 CU.

SERVICE ENTRANCE GROUNDING AND BONDING DETAIL

NO SCALE

1 / E7.2

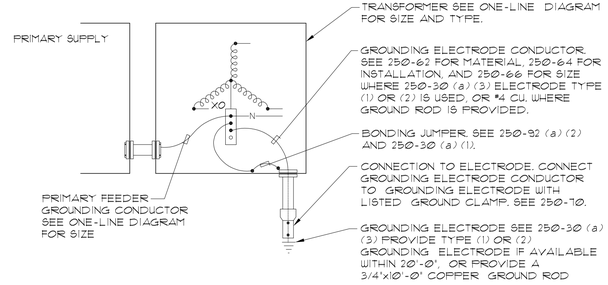

THREE PHASE TRANSFORMER GROUNDING

NO SCALE

DET-G6 (2004 CEC)

2 / E7.2

GENERAL NOTE:

1. ALL RATINGS SHOWN ARE FOR A UL LISTED SERIES COMBINATION OF THE BREAKERS INDICATED.

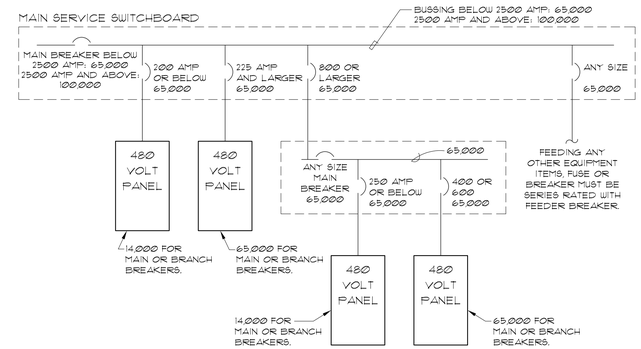

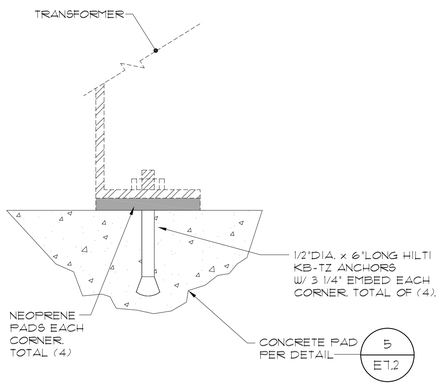

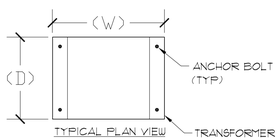

TRANSFORMER SIZING	WIDTH (W)	DEPTH (D)	HEIGHT	WEIGHT
15 KVA	24"	17"	27"	300 LBS.
30 KVA	24"	20"	33"	352 LBS.
45 KVA	32"	23"	35"	523 LBS.
75 KVA	32"	25"	33"	630 LBS.
112.5 KVA	35"	30"	46"	805 LBS.
150 KVA	38"	30"	56"	1045 LBS.
225 KVA	48"	34"	56"	1365 LBS.
300 KVA	48"	34"	63"	1575 LBS.
500 KVA	60"	50"	76"	4070 LBS.
1000 KVA	88"	72"	72"	13,200 LBS.
2500 KVA	98"	101"	72"	16,000 LBS.

TRANSFORMER ANCHORAGE DETAIL

NO SCALE

3 / E7.2

SINGLE PHASE TRANSFORMER FEEDER SCHEDULE						
ID	RATING	CONDUCTOR	PRIMARY		SECONDARY	
T10	10KVA	COPPER	(1)	3/4"C. 2 #10, 1 #12 GND	(1)	1 1/4"C. 3 #4, 1 #10 GND
		ALUMINUM		NA		NA
T15	15KVA		(1)	3/4"C. 2 #8, 1#10 GND	(1)	1 1/2"C. 3 #3, 1 #6 GND
				NA		NA
T25	25KVA		(1)	1 1/4"C. 2 #4, 1 #8 GND	(1)	2"C. 3 #1, 1 #6 GND
				NA		NA

THREE PHASE TRANSFORMER FEEDER SCHEDULE						
ID	RATING	CONDUCTOR	PRIMARY		SECONDARY	
T30	30 KVA	COPPER	(1)	1"C. 3 #6, 1 #8 GND	(1)	1 1/2"C. 4 #1, 1 #6 GND
		ALUMINUM		NA		NA
T45	45 KVA	COPPER	(1)	1 1/4"C. 3 #4, 1 #6 GND	(1)	2"C. 4 #2/0, 1 #6 GND
		ALUMINUM		NA		NA
T75	75 KVA	COPPER	(1)	2"C. 3 #1, 1 #6 GND	(1)	3"C. 4 #250, 1 #4 GND
		ALUMINUM	(1)	2"C. 3 #2/0, 1 #3 GND		3"C. 4 #350, 1 #2 GND
T112	112 1/2 KVA	COPPER	(1)	2"C. 3 #2/0, 1 #4 GND	(2)	3"C. 4 #3/0, 1 #2 GND
		ALUMINUM	(1)	2"C. 3 #4/0, 1 #2 GND	(2)	3"C. 4 #250, 1 #1/0 GND
T150	150 KVA	COPPER	(1)	3"C. 3 #4/0, 1 #4 GND	(2)	3"C. 4 #350, 1 #1 GND
		ALUMINUM	(1)	3"C. 3 #300, 1 #2 GND	(2)	3"C. 4 #500, 1 #2/0 GND
T225	225 KVA	COPPER	(2)	2"C. 3 #2/0, 1 #2 GND	(3)	3"C. 4 #300, 1 #1/0 GND
		ALUMINUM	(2)	2"C. 3 #4/0, 1 #1/0 GND	(3)	3"C. 4 #500, 1 #3/0 GND
T300	300 KVA	COPPER	(2)	3"C. 3 #4/0, 1 #2 GND	(4)	3"C. 4 #350, 1 #3/0 GND
		ALUMINUM	(2)	3"C. 3 #300, 1 #1/0 GND	(4)	3"C. 4 #500, 1 #250 GND
T500	500 KVA	COPPER	(3)	4"C. 3 #300, 1 #1/0 GND	(8)	3"C. 4 #250, 1 #250 GND
		ALUMINUM	(3)	4"C. 3 #400, 1 #3/0 GND	(8)	3"C. 4 #400, 1 #400 GND

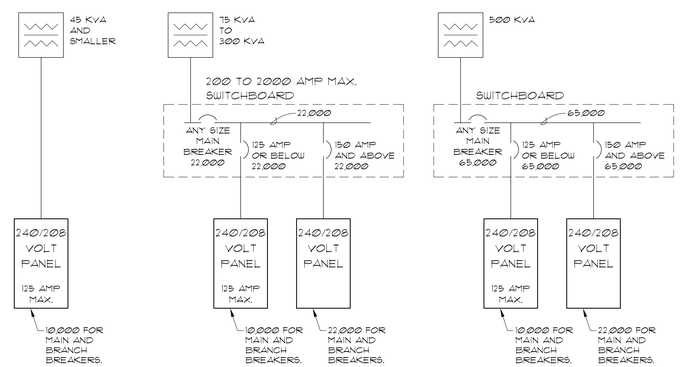

TYPICAL 480 VOLT SERVICE AIC EQUIPMENT RATINGS

NO SCALE

4 / E7.2

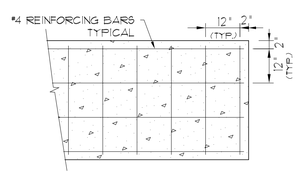

TYPICAL SECTION ELEVATION

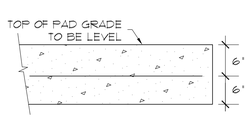

GENERAL NOTES

1. ALL CONCRETE SHALL ATTAIN A MINIMUM COMPRESSIVE STRENGTH OF 3000 PSI AT 28 DAYS. AS PER 1905A METHOD 'A' AND TABLE 19A-A-8. BATCH PLANT INSPECTIONS AND TESTS OF CEMENT AND REINFORCING BARS MAY BE WAIVED PER TITLE 24 SECTION 1704A.4.3 & 1704A.4.4.
2. CONCRETE MIX DESIGNS SHALL COMPLY WITH TITLE 24 SECTION 1905A.2.
3. PORTLAND CEMENT SHALL CONFORM TO (ASTM C-150) TYPE I OR II
4. CONCRETE AGGREGATES SHALL CONFORM TO ASTM C-33
5. CONCRETE PLACEMENT SHALL CONFORM TO TITLE 24 SECTION 1905A.7.
6. ALL REINFORCING BARS SHALL CONFORM TO TITLE 24 SECTION 1903A AND ASTM A-615 GRADE 60.

TYPICAL HOUSEKEEPING PAD DETAIL

NO SCALE

DET-AN2

5 / E7.2

ARCHITECT

westbergwhite architecture
1775 HANCOCK ST, SUITE 120
SAN DIEGO, CA 92110
619.542.1188 619.542.1663 FAX

LICENSED ARCHITECT FRASCO WHITE C-8090 EXP. 10-2025 STATE OF CALIFORNIA

CONSULTANT

REGISTERED PROFESSIONAL ENGINEER MONICA GOESCHNEIDER No. E 14781 Exp. 6-30-2027 ELECTRICAL STATE OF CALIFORNIA

JOHNSON CONSULTING ENGINEERS, INC.
Power | Lighting | Multimedia
Communications | Data Networking
12875 Brookprinter Place, Suite 300
Poway, CA 92064
P 858.679.4030 | F 858.513.0559
www.jce-inc.com

#21116 4/10/2025

City of La Puente
15900 E. MAIN ST. LA PUENTE, CA. 91744

DETAILS

La Puente ACTIVITY CENTER
501 GLENDORA AVE. LA PUENTE, CA. 91744

PROJECT NO.: 22008
R.S. A.P.
FILE NAME
DATE: 12/05/2025 DRAWN CHECKED
REVISIONS
SHEET NO. E7.2
OF SHEETS

CITY APPROVAL

N:\2021\21116PM\007-E7.2-21116.dwg Oct 09, 2025 - 4:19pm yzhang

GENERAL NOTES:

1. ALL CONDUIT PENETRATION THRU FIRE RATED PARTITIONS SHALL COMPLY WITH THESE DETAILS. SEE ARCHITECTURAL PLANS FOR LOCATION OF ALL RATED PARTITIONS.

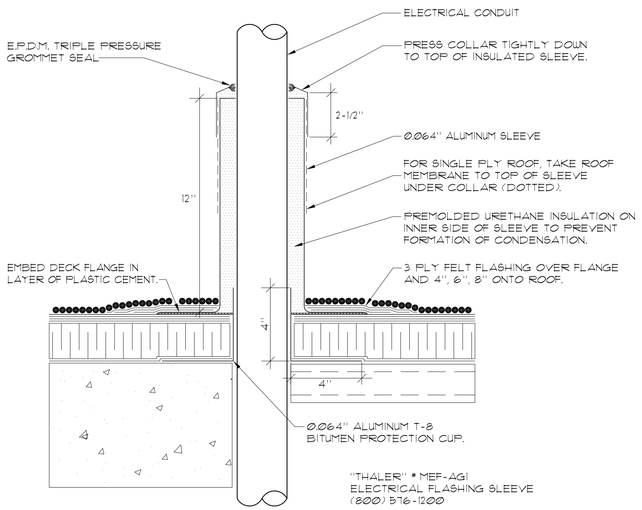

CONDUIT ROOF PENETRATION DETAIL

NO SCALE

DET-C11 — 1 / E8.1

System No.W-L-1166
F Ratings - 1 and 2 Hr
T RATINGS - 0 HR

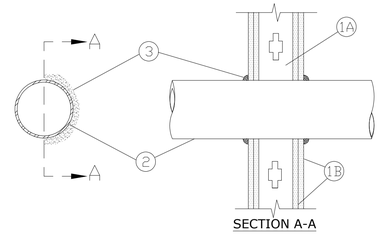

SECTION A-A

1. WALL ASSEMBLY - THE 1 OR 2 HR FIRE RATED GYPSUM WALLBOARD/STUD WALL ASSEMBLY SHALL BE CONSTRUCTED OF THE MATERIALS AND IN THE MANNER SPECIFIED IN THE INDIVIDUAL U300 OR U400 SERIES WALL AND PARTITION DESIGNS IN THE UL FIRE RESISTANCE DIRECTORY AND SHALL INCLUDE THE FOLLOWING CONSTRUCTION FEATURES:

A. STUDS - WALL FRAMING MAY CONSIST OF EITHER WOOD STUDS OR STEEL CHANNEL STUDS. WOOD STUDS TO CONSIST OF NOM 2 BY 4 IN. (51 BY 102 MM) LUMBER SPACED 16 IN. (406 MM) OC. STEEL STUDS TO BE MIN 3-1/2 IN. (89 MM) WIDE AND SPACED MAX 24 IN. (610 MM) OC.
B. GYPSUM BOARD* - THICKNESS, TYPE, NUMBER OF LAYERS AND FASTENERS AS REQUIRED IN THE INDIVIDUAL WALL AND PARTITION DESIGN. MAX DIAM OF OPENING IS 5 IN. (127 MM).

THE HOURLY F RATING OF THE FIRESTOP SYSTEM IS EQUAL TO THE HOURLY FIRE RATING OF THE WALL ASSEMBLY IN WHICH IT IS INSTALLED.

2. THROUGH PENETRANTS - ONE METALLIC PIPE, CONDUIT OR TUBING INSTALLED EITHER CONCENTRICALLY OR ECCENTRICALLY WITHIN THE FIRESTOP SYSTEM. THE ANNULAR SPACE BETWEEN PIPE, CONDUIT OR TUBING AND PERIPHERY OF OPENING SHALL BE MIN OF 0 IN. (0 MM) (POINT CONTACT) TO MAX 1/8 IN. (3.2 MM) PIPE, CONDUIT OR TUBING TO BE RIGIDLY SUPPORTED ON BOTH SIDES OF WALL ASSEMBLY. THE FOLLOWING TYPES AND SIZES OF METALLIC PIPES, CONDUITS OR TUBING MAY BE USED:

A. CONDUIT - NOM 4 IN. (102 MM) DIAM (OR SMALLER) STEEL ELECTRICAL METALLIC TUBING OR RIGID STEEL CONDUIT.

3. FILL/VOID OR CAVITY MATERIALS* - CAULK, SEALANT OR PUTTY - MIN 1/2 IN. (13 MM) DIAMETER BEAD OF CAULK OR PUTTY APPLIED CONTINUOUSLY AROUND THE PENETRANT ON THE WALL SURFACES ON BOTH SIDES OF THE WALL.

3M COMPANY - CP 25WB+ CAULK, FB-3000 WT SEALANT, MP+ STIX PUTTY.

*BEARING THE UL CLASSIFICATION MARKING

SYSTEM NO C-AJ-1014

F RATING--2 HR
T RATING--0 HR
L RATING AT AMBIENT--LESS THAN 1 CFM/sq ft (SEE ITEM 4)
L RATING AT 400° F--LESS THAN 1 CFM/sq ft (SEE ITEM 4)

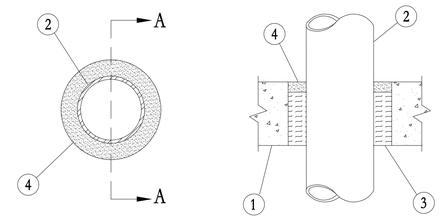

SECTION A-A

1. FLOOR OR WALL ASSEMBLY - MIN 3-1/4 IN. THICK REINFORCED LIGHTWEIGHT OR NORMAL WEIGHT (100-150 PCF) CONCRETE. WALL MAY ALSO BE CONSTRUCTED OF ANY UL CLASSIFIED CONCRETE BLOCKS*. MAX DIAM OF CIRCULAR OPENING IS 6 IN.
SEE CONCRETE BLOCKS (CAZT) CATEGORY IN THE FIRE RESISTANCE DIRECTORY FOR NAMES OF MANUFACTURERS.

2. THROUGH PENETRANTS - ONE METALLIC PIPE OR CONDUIT TO BE CENTERED WITHIN THE FIRESTOP SYSTEM. A NOM ANNULAR SPACE OF 3/4 IN. IS REQUIRED WITHIN THE FIRESTOP SYSTEM. PIPE OR CONDUIT TO BE RIGIDLY SUPPORTED ON BOTH SIDES OF FLOOR OR WALL ASSEMBLY. THE FOLLOWING TYPES AND SIZES OF METALLIC PIPES OR CONDUITS MAY BE USED:
- NOM 4 IN. DIAM (OR SMALLER) SCHEDULE 10 (OR HEAVIER) STEEL PIPE.
B. CONDUIT - NOM 4 IN. DIAM (OR SMALLER) STEEL ELECTRICAL METALLIC TUBING OR STEEL CONDUIT.

3. PACKING MATERIAL - MIN 4 PCF MINERAL WOOL BATT INSULATION FIRMLY PACKED INTO OPENING AS A PERMANENT FORM. PACKING MATERIAL TO BE RECESSED FROM TOP SURFACE OF FLOOR OR FROM BOTH SURFACES OF WALL AS REQUIRE TO ACCOMMODATE THE REQUIRED THICKNESS OF FILL MATERIAL.
MIN THICKNESS OF PACKING MATERIAL IN FLOORS AND WALLS TO BE 2-3/4 IN. AND 2-1/4 IN., RESPECTIVELY.

4. FILL/VOID OR CAVITY MATERIAL* - SEALANT - MIN 1/2 IN. THICKNESS OF FILL MATERIAL APPLIED WITHIN ANNULUS, FLUSH WITH TOP SURFACE OF FLOOR OR WITH BOTH SURFACES OF WALL. AS AN ALTERNATE, THE PERMANENT FORMING MATERIAL (ITEM 3) MAY BE OMITTED IF THE FILL MATERIAL
THICKNESS IS INCREASED TO A MIN 1-1/2 IN.
MINNESOTA MINING & MFG CO - TYPES FB-2000 OR FB-2000+.
(NOTE: L RATINGS APPLY ONLY WHEN FB-2000+ IS USED.)
*BEARING THE UL CLASSIFICATION MARKING

CONDUIT PENETRATION THRU FIRE RATED PARTITIONS

NO SCALE

DET-C12 — 2 / E8.1

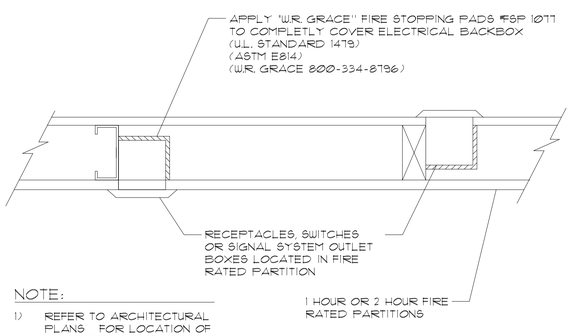

NOTE:
1) REFER TO ARCHITECTURAL PLANS FOR LOCATION OF ALL RATED PARTITIONS.

OUTLET BOX IN FIRE RATED PARTITION

NO SCALE

DET-P24 — 3 / E8.1

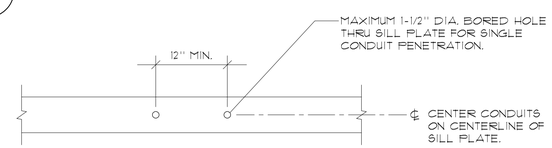

TYPICAL TOP PLATE PLAN VIEW

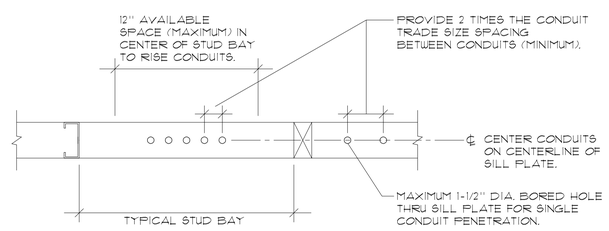

TYPICAL SILL PLATE PLAN VIEW

CONDUIT PENETRATIONS THRU PLATE DETAIL

NO SCALE

4 / E8.1

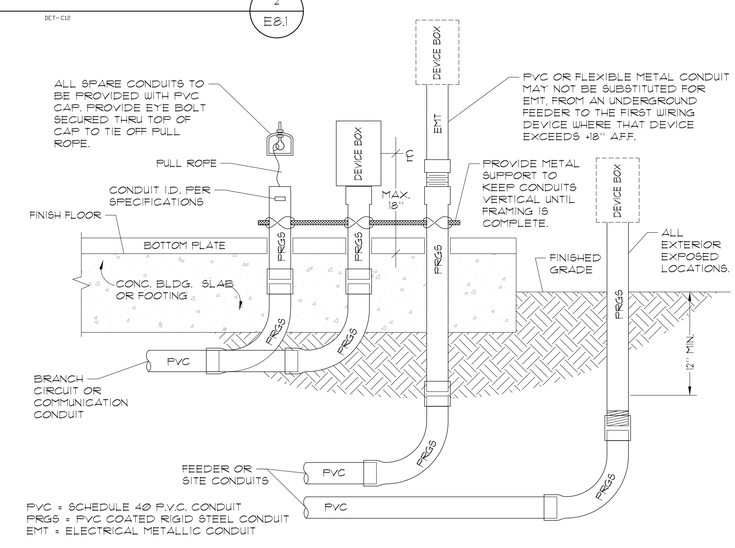

PVC = SCHEDULE 40 P.V.C. CONDUIT
PRGS = PVC COATED RIGID STEEL CONDUIT
EMT = ELECTRICAL METALLIC CONDUIT

TYPICAL CONDUIT DETAIL

NO SCALE

5 / E8.1

REGISTERED PROFESSIONAL ENGINEER — MONICA GOESEWINSKI — No. E 14781 — Exp. 6-30-2027 — ELECTRICAL — STATE OF CALIFORNIA

#21116 4/9/2025

JOHNSON CONSULTING ENGINEERS, INC.
Power | Lighting | Multimedia
Communications | Data Networking
12875 Brookprinter Place, Suite 300
Poway, CA 92064
P 858.679.4030 | F 858.513.0559
www.jce-inc.com

ARCHITECT
westbergwhite architecture
1775 HANCOCK ST, SUITE 120
SAN DIEGO, CA 92110
619.542.1188 619.542.1663 FAX
LICENSED ARCHITECT — FRASCO WHITE — C-9090 — EXP. 10-2025 — STATE OF CALIFORNIA

CONSULTANT

City of La Puente
15900 E. MAIN ST, LA PUENTE, CA. 91744

CONDUIT DETAILS

La Puente ACTIVITY CENTER
501 GLENDORA AVE, LA PUENTE, CA. 91744

PROJECT NO.: 22008
R.S. A.P.
FILE NAME
DATE: 12/05/2025 DRAWN CHECKED
REVISIONS
SHEET NO. E8.1
OF SHEETS

CITY APPROVAL

N:\2021\211169\N\008-E8.1-21116.dwg Oct 09, 2025 - 4:19pm yzhang

277/480 | **277/480 3PH, 4WIRE** | 200% Neutral Bus | (INTEGRAL)TVSS Protection | (REMOTE)TVSS Protection | Service Entrance Rated: X | Load Side Feed thru Lugs

HL — 200 AMP

Main: Breaker X, Lug | Enclosure: Recessed, Surface X

ENCLOSURE TYPE: X NEMA TYPE 1; NEMA TYPE 3R; NEMA TYPE 4X — ENCLOSURE NOTE

GENERAL DISTRIBUTION — BREAKER REQUIREMENTS: **PROVIDE LOCK ON BREAKER DEVICES FOR ALL EMERGENCY LIGHTING, WATER HEATERS**; **MOTORS, AND FIRE ALARM EQUIPMENT SERVED FROM THIS PANEL.**

LCL	NHL	CIRCUIT DESCRIPTION	AMP	POLE	NO	PHASE A	PHASE B	PHASE C	NO	AMP	POLE	CIRCUIT DESCRIPTION	LCL	NHL
		FUTURE TRANSFORMER PROVISION												
		INTERIOR LTG	20	1	1	1280			2	20	1	**EXTERIOR LTG**		
		INTERIOR LTG	20	1	3		800		4	20	1	**EXTERIOR LTG**		
		LTG CONTROL PANEL	20	1	5			600	6	20	1	**SPARE**		
		SPARE	20	1	7				8	20	1	**SPARE**		
		SPARE	20	1	9				10	20	1	**SPARE**		
		SPARE	20	1	11				12	20	1	**SPARE**		
		FUTURE METERING PROVISION												
		SPARE	20	1	13				14	20	1	**SPARE**		
		SPARE	20	1	15				16	20	1	**SPARE**		
		SPARE	20	1	17				18	20	1	**SPARE**		
		SPARE	20	1	19				20	20	1	**SPARE**		
		SPARE	20	1	21				22	20	1	**SPARE**		
		SPARE	20	1	23				24	20	1	**SPARE**		
		FUTURE METERING PROVISION												
		TRNASFORMER 'T-AC'	175	3	25	19541			26	20	1	**SPARE**		
					27		20388		28	20	1	**SPARE**		
					29			18521	30	20	1	**SPARE**		
		SPARE	20	1	31				32	20	1	**SPARE**		
		SPARE	20	1	33				34	20	1	**SPARE**		
		SPARE	20	1	35				36	20	1	**SPARE**		
		SPARE	20	1	37				38	20	1	**SPARE**		
		SPARE	20	1	39				40	20	1	**SPARE**		
		SPARE	20	1	41				42	20	1	**SPARE**		
		SPARE	20	1	43				44	20	1	**SPACE**		
		SPACE	20	1	45				46	20	1	**SPACE**		
		SPACE	20	1	47				48	20	1	**SPACE**		
		SPACE	20	1	49				50	20	1	**SPACE**		
		SPACE	20	1	51				52	20	1	**SPACE**		
		SPACE	20	1	53				54	20	1	**SPACE**		

XX NOTE — NOTE #1 — NOTE #2

NHL= Non Harmonic Load — **TOTAL LOAD PER PHASE** 20821 | 21188 | 19321
LCL= Long Continuous Load — **25% LONG CONTINUOUS LOADS** 0 | 0 | 0

HIGH PHASE 21188 / 0.9pf = KVA @ 277V **85.0 AMPS**
ALL PHASES 61330 / 0.9pf = KVA @ 480V/3PH **82.1 AMPS**

SUB PANEL — SUB PANEL — Max. Neut. Load — DEMAND PER

130 AMPS — **TOTAL CONNECTED LOAD** 20821 | 21188 | 19321 — CEC 220-86 — **AMPS**

M:\Panel Schedule\2021\21116 La Puente Activity Center\HL - 3PH - Disaggregation Panel 54 circuits-12-12-30.xls 7:48 AM4/10/2025

277/480 | **277/480 3PH, 4WIRE** | 200% Neutral Bus | (INTEGRAL)TVSS Protection | (REMOTE)TVSS Protection | Service Entrance Rated: X | Load Side Feed thru Lugs

EL — 60 AMP

Main: Breaker X, Lug | Enclosure: Recessed, Surface X

ENCLOSURE TYPE: X NEMA TYPE 1; NEMA TYPE 3R; NEMA TYPE 4X — ENCLOSURE NOTE

GENERAL DISTRIBUTION — BREAKER REQUIREMENTS: **PROVIDE LOCK ON BREAKER DEVICES FOR ALL EMERGENCY LIGHTING, WATER HEATERS**; **MOTORS, AND FIRE ALARM EQUIPMENT SERVED FROM THIS PANEL**

LCL	NHL	CIRCUIT DESCRIPTION	AMP	POLE	NO	PHASE A	PHASE B	PHASE C	NO	AMP	POLE	CIRCUIT DESCRIPTION	LCL	NHL
		EM INTERIOR LTG	20	1	1	300			2	20	1	**EM EXTERIOR LTG**		
		EM INTERIOR LTG	20	1	3	150	200		4	20	1	**SPARE**		
		SPRAE	20	1	5				6	20	1	**SPARE**		
		SPARE	20	1	7				8	20	1	**SPARE**		
		SPARE	20	1	9				10	20	1	**SPARE**		
		SPARE	20	1	11				12	20	1	**SPARE**		
		SPARE	20	1	13				14	20	1	**SPARE**		
		SPARE	20	1	15				16	20	1	**SPARE**		
		SPARE	20	1	17				18	20	1	**SPARE**		
		SPARE	20	1	19				20	20	1	**SPARE**		
		SPARE	20	1	21				22	20	1	**SPARE**		
		SPARE	20	1	23				24	20	1	**SPARE**		
		SPARE	20	1	25				26	20	1	**SPARE**		
		SPARE	20	1	27				28	20	1	**SPARE**		
		SPARE	20	1	29				30	20	1	**SPARE**		
		SPARE	20	1	31				32	20	1	**SPARE**		
		SPARE	20	1	33				34	20	1	**SPARE**		
		SPARE	20	1	35				36	20	1	**SPARE**		
		SPARE	20	1	37				38	20	1	**SPARE**		
		SPARE	20	1	39				40	20	1	**SPARE**		
		SPARE	20	1	41				42	20	1	**SPARE**		
		SPARE	20	1	43				44	20	1	**SPARE**		
		SPARE	20	1	45				46	20	1	**SPARE**		
		SPARE	20	1	47				48	20	1	**SPARE**		
		SPARE	20	1	49				50	20	1	**SPARE**		
		SPARE	20	1	51				52	20	1	**SPARE**		
		SPARE	20	1	53				54	20	1	**SPARE**		

SPECIAL PANEL NOTE — NOTE #1 — NOTE #2

NHL= Non Harmonic Load — **TOTAL LOAD PER PHASE** 450 | 200 | 0
LCL= Long Continuous Load — **25% LONG CONTINUOUS LOADS** 0 | 0 | 0

HIGH PHASE 450 / 0.9pf = VA @ 277V **1.8 AMPS**
ALL PHASES 650 / 0.9pf = VA @ 480V/3PH **0.9 AMPS**

SUB PANEL — SUB PANEL — Max. Neut. Load — DEMAND PER

3 AMPS — **TOTAL CONNECTED LOAD** 450 | 200 | 0 — CEC 220-86 — 31000 sq. ft. — **AMPS**

M:\Panel Schedule\2021\21116 La Puente Activity Center\EL - 3PH - Panel.xls 7:49 AM4/10/2025

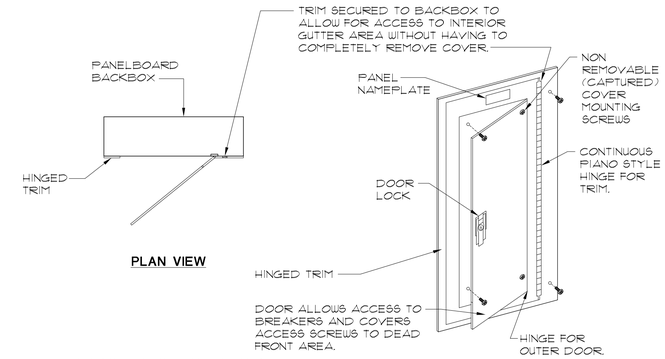

DETAIL GENERAL NOTES

1. PROVIDE FOR ALL PANELBOARDS FOR THIS PROJECT - SURFACE, RECESSED NEMA 1, OR NEMA 3R CONFIGURATION.
2. SEE REFERENCE ONE LINE DIAGRAM FOR ALL PANELBOARD AIC RATINGS.

TYPICAL PANELBOARD DOOR / TRIM DETAIL

NO SCALE

1 / E9.1

120/208 | **120/208 3PH, 4WIRE** | 200% Neutral Bus | (INTEGRAL)TVSS Protection | (REMOTE)TVSS Protection | Service Entrance Rated | Load Side Feed thru Lugs

AC1 — 400 AMP

Main: Breaker X, Lug | Enclosure: Recessed X, Surface

ENCLOSURE TYPE: X NEMA TYPE 1; NEMA TYPE 3R; NEMA TYPE 4X — ENCLOSURE NOTE

GENERAL DISTRIBUTION — BREAKER REQUIREMENTS: **PROVIDE LOCK ON BREAKER DEVICES FOR ALL EMERGENCY LIGHTING, WATER HEATERS**; **MOTORS, AND FIRE ALARM EQUIPMENT SERVED FROM THIS PANEL**

LCL	NHL	CIRCUIT DESCRIPTION	AMP	POLE	NO	PHASE A	PHASE B	PHASE C	NO	AMP	POLE	CIRCUIT DESCRIPTION	LCL	NHL
		PANEL 'ACZ'	200	3	1	6000			2	200	3	**PANEL 'AC3'**		
		"			3	13491	7200		4			"		
		"			5		13188	5450	6			"		
		SPACE	20	1	7			13071	8	20	1	**SPACE**		
		SPACE	20	1	9				10	20	1	**SPACE**		
		SPACE	20	1	11				12	20	1	**SPACE**		
		SPACE	20	1	13				14	20	1	**SPACE**		
		SPACE	20	1	15				16	20	1	**SPACE**		
		SPACE	20	1	17				18	20	1	**SPACE**		
		SPACE	20	1	19				20	20	1	**SPACE**		
		SPACE	20	1	21				22	20	1	**SPACE**		
		SPACE	20	1	23				24	20	1	**SPACE**		
		SPACE	20	1	25				26	20	1	**SPACE**		
		SPACE	20	1	27				28	20	1	**SPACE**		
		SPACE	20	1	29				30	20	1	**SPACE**		
		SPACE	20	1	31				32	20	1	**SPACE**		
		SPACE	20	1	33				34	20	1	**SPACE**		
		SPACE	20	1	35				36	20	1	**SPACE**		
		SPACE	20	1	37				38	20	1	**SPACE**		
		SPACE	20	1	39				40	20	1	**SPACE**		
		SPACE	20	1	41				42	20	1	**SPACE**		
		SPACE	20	1	43				44	20	1	**SPACE**		
		SPACE	20	1	45				46	20	1	**SPACE**		
		SPACE	20	1	47				48	20	1	**SPACE**		
		SPACE	20	1	49				50	20	1	**SPACE**		
		SPACE	20	1	51				52	20	1	**SPACE**		
		SPACE	20	1	53				54	20	1	**SPACE**		

XX NOTE — NOTE #1 — NOTE #2

NHL= Non Harmonic Load — **TOTAL LOAD PER PHASE** 19541 | 20388 | 18521
LCL= Long Continuous Load — **25% LONG CONTINUOUS LOADS** 0 | 0 | 0

HIGH PHASE 20388 / 0.9pf = VA @ 120V **188.9 AMPS**
ALL PHASES 58450 / 0.9pf = VA @ 208V/3PH **180.4 AMPS**

SUB PANEL — SUB PANEL — Max. Neut. Load — DEMAND PER

289 AMPS — **TOTAL CONNECTED LOAD** 19541 | 20388 | 18521 — CEC 220-86 — **AMPS**

M:\Panel Schedule\2021\21116 La Puente Activity Center\AC1 - 3PH - Panel 54 circuits.xls 7:47 AM4/10/2025

120/208 | **120/208 3PH, 4WIRE** | 200% Neutral Bus | (INTEGRAL)TVSS Protection | (REMOTE)TVSS Protection | Service Entrance Rated | Load Side Feed thru Lugs

AC2 — 200 AMP

Main: Breaker X, Lug | Enclosure: Recessed, Surface X

ENCLOSURE TYPE: X NEMA TYPE 1; NEMA TYPE 3R; NEMA TYPE 4X — ENCLOSURE NOTE

GENERAL DISTRIBUTION — BREAKER REQUIREMENTS: **PROVIDE LOCK ON BREAKER DEVICES FOR ALL EMERGENCY LIGHTING, WATER HEATERS**; **MOTORS, AND FIRE ALARM EQUIPMENT SERVED FROM THIS PANEL**

LCL	NHL	CIRCUIT DESCRIPTION	AMP	POLE	NO	PHASE A	PHASE B	PHASE C	NO	AMP	POLE	CIRCUIT DESCRIPTION	LCL	NHL
		SOUND RECEPTACLE	20	1	1	800			2	20	1	**PROJECTOR**		
		SOUND RECEPTACLE	20	1	3	1200	800		4	20	1	**SCREEN**		
		UPS	30	2	5		600	1250	6	20	1	**RECEPTALCES**		
		"			7	1250		400	8	20	1	**RECEPTALCES**		
		SOUND RECEPTACLE	30	1	9	400	1800		10	20	1	**RECEPTALCES**		
		FIRE ALARM PANEL	20	1	11		400	800	12	20	1	**RECEPTALCES**		
		LTG CTRL HEADEND	20	1	13	400		400	14	20	1	**PEDESTAL/RECEPTACLE**		
		SECURITY PANEL	20	1	15	400	800		16	20	1	**PEDESTAL/RECEPTACLE**		
		ACCESS CONTROL PANEL	20	1	17		400	800	18	20	1	**RECEPTALCES**		
		RECEPTACLES	20	1	19	400			20	20	1	**RECEPTALCES**		
		RECEPTACLES	20	1	21		400		22	20	1	**RECEPTALCES**		
		RECEPTACLE	20	1	23			800	24	20	1	**RECEPTALCES**		
		RECEPTACLE	20	1	25	800			26	20	1	**RECEPTALCES**		
		RECEPTACLE	20	1	27		800		28	20	1	**DRINKING FOUNTAIN**		
		RECEPTACLE	20	1	29			800	30	20	1	**RECEPTALCES**		
		RECEPTACLES	20	1	31	400			32	20	1	**ROOF RECEPTACLE**		
		ROLL UP DOOR	20	1	33	200	1200		34	20	1	**SPARE**		
		TP-2	20	1	35			200	36	20	1	**SPARE**		
		SPARE	20	1	37				38	20	1	**SPARE**		
		SPARE	20	1	39				40	20	1	**SPARE**		
		SPARE	20	1	41				42	20	1	**SPARE**		
		SPARE	20	1	43				44	20	1	**SPACE**		
		SPACE	20	1	45				46	20	1	**SPACE**		
		SPACE	20	1	47				48	20	1	**SPACE**		
		SPACE	20	1	49				50	20	1	**SPACE**		
		SPACE	20	1	51				52	20	1	**SPACE**		
		SPACE	20	1	53				54	20	1	**SPACE**		

XX NOTE — NOTE #1 — NOTE #2

NHL= Non Harmonic Load — **TOTAL LOAD PER PHASE** 6250 | 7200 | 5450
LCL= Long Continuous Load — **25% LONG CONTINUOUS LOADS** 0 | 0 | 0

HIGH PHASE 7200 / 0.9pf = VA @ 120V **66.7 AMPS**
ALL PHASES 18900 / 0.9pf = VA @ 208V/3PH **58.3 AMPS**

SUB PANEL — SUB PANEL — Max. Neut. Load — DEMAND PER

102 AMPS — **TOTAL CONNECTED LOAD** 6250 | 7200 | 5450 — CEC 220-86 — **AMPS**

M:\Panel Schedule\2021\21116 La Puente Activity Center\AC2 - 3PH - Panel 54 circuits.xls 7:45 AM4/10/2025

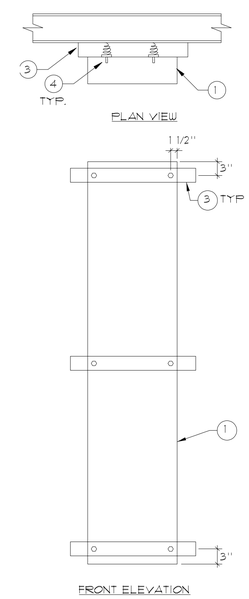

ELECTRICAL PANELBOARD MAX. 200 LB

DETAIL NOTES

1. ELECTRICAL PANEL WALL MOUNTED 90" H. X 20" W. X 6" D. MAXIMUM.
2. NOT USED
3. UNISTRUT P1000 C-CHANNEL.
4. UNISTRUT P2380 ANCHOR.
5. #12 SMS @ 6" O.C. TO BACKING. (MIN. 6 SCREWS @ EA UNISTRUCT TO BACKING)
6. BACKING PLATE AND DBL METAL STUDS PER STRUCTURAL

SURFACE MOUNTED PANEL BOARD

NO SCALE

8 / E7.2

REGISTERED PROFESSIONAL ENGINEER — MONICA BOESE-HANSEN — No. E 14781 Exp. 6-30-2027 — ELECTRICAL — STATE OF CALIFORNIA

#21116 4/10/2025

JOHNSON CONSULTING ENGINEERS, INC.
Power | Lighting | Multimedia
Communications | Data Networking
12875 Brookprinter Place, Suite 300
Poway, CA 92064
P 858.679.4030 | F 858.513.0559
www.jce-inc.com

ARCHITECT

westbergwhite architecture
1775 HANCOCK ST, SUITE 120
SAN DIEGO, CA 92110
619.542.1188 619.542.1663 FAX

LICENSED ARCHITECT — FRASCO WHITE — C-9090 EXP. 10-2025 — STATE OF CALIFORNIA

CONSULTANT

City of La Puente
15900 E. MAIN ST, LA PUENTE, CA. 91744

PANEL SCHEDULES AND PANELBOARD DETAILS

La Puente ACTIVITY CENTER
501 GLENDORA AVE, LA PUENTE, CA. 91744

PROJECT NO.: 22008
R.S. A.P.
FILE NAME
DATE: 12/05/2025 DRAWN CHECKED
REVISIONS
SHEET NO. E9.1 OF SHEETS

CITY APPROVAL

N:\2021\21116PW\004-E9.1-21116.dwg Oct 09, 2025 - 4:19pm yzhang

120/208	120/208 3PH, 4WIRE	200 AMP	Main	Breaker	X		ENCLOSURE TYPE	ENCLOSURE NOTE
	200% Neutral Bus			Lug		X	NEMA TYPE 1	
	(INTEGRAL)TVSS Protection		Enclosure	Recessed			NEMA TYPE 3R	
AC3	(REMOTE)TVSS Protection			Surface	X		NEMA TYPE 4X	
	Service Entrance Rated	GENERAL DISTRIBUTION	PROVIDE LOCK ON BREAKER DEVICES FOR ALL EMERGENCY LIGHTING, WATER HEATERS					
	Load Side Feed thru Lugs	BREAKER REQUIREMENTS :	MOTORS, AND FIRE ALARM EQUIPMENT SERVED FROM THIS PANEL					

LCL	NHL	CIRCUIT DESCRIPTION	AMP	POLE	NO	PHASE A	PHASE B	PHASE C	NO	AMP	POLE	CIRCUIT DESCRIPTION	LCL	NHL
		HP-1	90	3	1	7560			2	20	1	SPARE		
		"			3		7560		4	20	2	WH-1		
							1500							
		"			5			7560	6			"		
								1500						
		PE-1	30	3	7	2040			8	20	1	SPARE		
		"			9		2040		10	20	1	SPARE		
		"			11			2040	12	20	1	SPARE		
		DHP-1	25	2	13	1920			14	20	1	SPARE		
		"			15		1920		16	20	1	SPARE		
		DHP-2	25	2	17			1920	18	20	1	SPARE		
		"			19	1920			20	20	1	SPARE		
		EF-1	20	1	21		51		22	20	1	SPARE		
		EF-2	20	1	23			51	24	20	1	SPARE		
		EF-3	20	1	25	51			26	20	1	SPARE		
		EF-4	20	1	27		117		28	20	1	SPARE		
		SPARE	20	1	29				30	20	1	SPARE		
		SPARE	20	1	31				32	20	1	SPARE		
		SPARE	20	1	33				34	20	1	SPARE		
		SPARE	20	1	35				36	20	1	SPARE		
		SPARE	20	1	37				38	20	1	SPARE		
		SPARE	20	1	39				40	20	1	SPARE		
		SPARE	20	1	41				42	20	1	SPARE		

SPECIAL PANEL NOTE				NOTE #1				
				NOTE #2				
NHL= Non Harmonic Load	TOTAL LOAD PER PHASE	13491	13188	13071	HIGH PHASE	13491	/ 0.9pf = VA @ 120V	124.9 AMPS
LCL= Long Continuous Load	25% LONG CONTINUOUS LOADS	0	0	0	ALL PHASES	39750	/ 0.9pf = VA @ 208V/3PH	122.7 AMPS
	SUB PANEL							
Max. Neut. Load	SUB PANEL				DEMAND PER			
191 AMPS	TOTAL CONNECTED LOAD	13491	13188	13071	CEC 220-86			AMPS

M:\Panel Schedule\2021\21116 La Puente Activity Center\AC3 - 3PH - Panel.xls 7:48 AM4/10/2025

ARCHITECT

westbergwhite architecture
1775 HANCOCK ST, SUITE 120
SAN DIEGO, CA 92110
619.542.1188 619.542.1663 FAX

LICENSED ARCHITECT FRISCO WHITE C-9090 EXP. 10-2025 STATE OF CALIFORNIA

CONSULTANT

REGISTERED PROFESSIONAL ENGINEER MONICA GOESE-HAGER No. E 14781 Exp. 6-30-2027 ELECTRICAL STATE OF CALIFORNIA

JOHNSON CONSULTING ENGINEERS, INC.
Power | Lighting | Multimedia
Communications | Data Networking
12875 Brookprinter Place, Suite 300
Poway, CA 92064
P 858.679.4030 | F 858.513.0559
www.jce-inc.com

#21116 4/10/2025

City of La Puente
15900 E. MAIN ST. LA PUENTE, CA. 91744

PANEL SCHEDULES AND PANELBOARD DETAILS

La Puente ACTIVITY CENTER
501 GLENDORA AVE. LA PUENTE, CA. 91744

PROJECT NO.: 22008
R.S. A.P.
FILE NAME
DATE: 12/05/2025 DRAWN CHECKED
REVISIONS
SHEET NO. E9.2
OF SHEETS

CITY APPROVAL

N:\2021\21116PW\004-E9.2-21116.dwg Oct 08, 2025 - 4:19pm yzhang

CITY OF LA PUENTE ACTIVITY CENTER
FIRE SPRINKLER SYSTEM

SYMBOLS LEGEND

SYMBOL	ABBR.	DESCRIPTION
		NEW PIPING
		EXISTING PIPING
		EXISTING PIPING TO BE REMOVED
		PIPE HANGER LOCATION
		PIPE HANGER RESTRAINT LOCATION
		FLANGED CONNECTION
		"RIGID" GROOVED COUPLING
		"FLEXIBLE" GROOVED COUPLING
		SCREWED CAP
		FIRE HYDRANT
#2(1'-2")		HANGER TYPE AND LENGTH
		SCREWED PLUG
	2-WAY	2-WAY SEISMIC BRACE
	4-WAY	4-WAY SEISMIC BRACE
	FDC	FIRE DEPARTMENT CONNECTION
	TB	UNDERGROUND THRUST BLOCK
	RS	FIRE SPRINKLER RISER
		FIRE ALARM BELL
T		TAMPER SWITCH
		KEY VALVE
CL-900 AFF		PIPING ELEVATION
1		HYDRAULIC REFERENCE POINT
LD1		BRANCH LINE NUMBER
PD1		WELDED BRANCH LINE PIECE NO.
MD1		WELDED MAIN PIECE NO.
		SLEEVE AT FIRE RATED WALL PENETRATIONS
	PIV / FDC	POST INDICATING VALVE W/ FIRE DEPT. CONNECTION
	BFP	BACKFLOW PREVENTER

ABBREVIATIONS

AHJ	AUTHORITY HAVING JURISDICTION
AWWA	AMERICAN WATER WORKS ASSOCIATION
BFP	BACK FLOW PREVENTER
CBC	CALIFORNIA BUILDING CODE
CFC	CALIFORNIA FIRE CODE
CPVC	CHLORINATED POLYVINYL CHLORIDE
DSA	DIVISION OF THE STATE ARCHITECT
FDC	FIRE DEPARTMENT CONNECTION
FM	FACTORY MUTUAL
IBC	INTERNATIONAL BUILDING CODE
N.F.P.A.	NATIONAL FIRE PROTECTION ASSOCIATION
PVC	POLYVINYL CHLORIDE
PIV	POST INDICATOR VALVE
PSI	PRESSURE PER SQUARE INCH
RPDA	REDUCED PRESSURE DETECTOR ASSEMBLY
SQ. IN.	SQUARE INCHES
SQ. FT.	SQUARE FEET
UL	UNDERWRITES LABRATORY

PIPE TABLES

C900 DR 18 PVC - 235 PSI PIPE ID

NOMINAL	ACTUAL
4"	4.23
6"	6.09
8"	7.98
10"	9.79
12"	11.65

C151, CLASS 350 DUCTILE IRON PIPE ID

NOMINAL	ACTUAL
4"	4.300
6"	6.400
8"	8.550
10"	10.580
12"	12.640

SCH. 40 PIPE ID

NOMINAL	ACTUAL
3/4"	0.824"
1"	1.049
1-1/4"	1.380
1-1/2"	1.610
2"	2.067
2-1/2"	2.469

SCH. 10 PIPE ID

NOMINAL	ACTUAL
2-1/2"	2.635
3"	3.260
3-1/2"	3.760
4"	4.260
5"	5.295
6"	6.357

GENERAL BUILDING SYSTEM NOTES

1. INSTALLATION SHALL CONFORM TO THE FOLLOWING CODES AND STANDARDS:
   A. CALIFORNIA BUILDING CODE, 2022 ED.
   B. CALIFORNIA FIRE CODE, 2022 ED.
   C. NFPA 13, 2022 ED.
   D. NFPA 14, 2019 ED.
   E. NFPA 24, 2022 ED.
   F. NFPA 72, 2022 ED.
   G. ASCE 7, 2016 ED.
   H. APPLICABLE LOCAL CODES AND AMENDMENTS
2. ALL MATERIALS INSTALLED SHALL BE NEW, U.L. LISTED AND/OR F.M. APPROVED FOR FIRE PROTECTION SYSTEMS.
3. INSTALLING CONTRACTOR SHALL OBTAIN ALL REQUIRED PERMITS.
4. CUTTING, NOTCHING, WELDING AND PENETRATION OF STRUCTURAL MEMBERS SHALL BE DONE ONLY IN ACCORDANCE WITH THE APPROVED PLANS OR UPON WRITTEN DIRECTION AND/OR APPROVAL OF THE ARCHITECT OR PROJECT STRUCTURAL ENGINEER OF RECORD.
5. ALL PIPING PENETRATIONS OF FIRE-RATED WALL AND FLOOR ASSEMBLIES SHALL BE FURNISHED WITH A LISTED/APPROVED FIRE STOP WITH A FIRE RESISTANCE RATING EQUAL TO OR GREATER THAN THAT OF THE ASSEMBLY BEING PENETRATED. ROOF PENETRATIONS SHALL BE FLASHED AND SEALED AS APPROVED BY ARCHITECT.
6. WHERE VALVES OR OPERABLE SYSTEM COMPONENTS ARE PROPOSED FOR INSTALLATION IN WALL OR CEILING CAVITIES, INSTALLING CONTRACTOR SHALL FURNISH ACCESS PANELS WITH APPROVED SIGNAGE IDENTIFYING LOCATION AND FUNCTION OF COMPONENTS WITHIN.
7. FURNISH A SUPPLY OF SPARE SPRINKLERS IN ACCORDANCE WITH NFPA 13, INCLUDING WRENCHES OR SPECIAL FITTINGS REQUIRED FOR EACH TYPE OF SPRINKLER INSTALLED. THE NUMBER OF EACH TYPE OF SPRINKLER AND THE TOTAL NUMBER OF SPRINKLERS SHALL BE AS DESCRIBED IN NFPA 13.
8. ALL PIPING SHALL BE SUPPORTED, RESTRAINED AND SWAY-BRACED STRICTLY PER NFPA 13 AND ASCE 7-16. RESTRAINTS AND LATERAL SWAY BRACING MAY BE OMITTED WHERE ROD-TYPE HANGERS DO NOT EXCEED 6" IN THE MEASURED DISTANCE FROM POINT OF CONNECTION TO TOP OF PIPING.
9. FLEXIBLE AND NON-FLEXIBLE GROOVED COUPLING SHALL BE USED ACCORDING TO THE REQUIREMENTS FOR SEISMIC PROTECTION OF PIPING AND LOCATION OF SWAY BRACING PER NFPA 13 UNLESS NOTED OTHERWISE. WHERE GROOVED COUPLINGS ARE SHOWN ON PLANS, THEY SHALL BE CONSIDERED NON-FLEXIBLE TYPE UNLESS NOTED AS FLEXIBLE TYPE. PROVIDE BRACING WITHIN 24" OF EVERY FLEXIBLE CONNECTION.
10. SYSTEMS OF GREATER THAN 6 SPRINKLERS SHALL BE MONITORED BY AN OFF-SITE SUPERVISORY STATION. SUPERVISORY SYSTEM AND CENTRAL STATION SHALL BE U.L. LISTED AND/OR F.M. APPROVED, AND ACCEPTABLE TO THE SERVING FIRE DEPARTMENT. SUPERVISORY SYSTEM SHALL MONITOR ALL VALVES CONTROLLING FIRE PROTECTION SYSTEM WATER SUPPLIES AND FLOW SWITCHES INSTALLED ON THE SYSTEM(S).
11. ELECTRICAL ROOMS, TRANSFORMER VAULTS AND OTHER ROOMS WHERE DIRECT WATER APPLICATION IS UNDESIRABLE MAY BE PROVIDED WITH SHIELD TO DEFLECT WATER AWAY FROM EQUIPMENT. WHERE APPROVED BY THE LOCAL FIRE OFFICIAL, APPROVED SMOKE DETECTION DEVICES MAY BE FURNISHED IN LIEU OF FIRE SPRINKLERS. DETECTION EQUIPMENT SHALL BE MONITORED WITH THE FIRE SPRINKLER SYSTEM.
12. PRIOR TO COMMISSIONING AND FINAL ACCEPTANCE TESTING, CONTRACTOR SHALL AFFIX A PERMANENT AND DURABLE HYDRAULIC DESIGN PLATE STATING THE BASIS OF DESIGN AND DEMAND FOR EACH HYDRAULICALLY DESIGNED SYSTEM PER NFPA 13. WHERE A HYDRAULIC INFORMATION PLATE IS REQUIRED AT THE FIRE DEPARTMENT CONNECTION BY NFPA 13 OR 14, SUCH SIGANGE SHALL BE INSTALLED IN SUCH A MANNER AND FABRICATED OF SUCH MATERIALS AS TO BE PROTECTED FROM EXPOSURE TO THE ELEMENTS AND PHYSICAL DAMAGE.
13. ALL VALVES SHALL BE EQUIPPED WITH IDENTIFICATION SIGNS STATING THE PURPOSE AND FUNCTION OF THE VALVE, AND ALSO THE EXISTENCE AND LOCATION OF ANY OTHER VALVES THAT ARE REQUIRED TO BE OPERATED IN ORDER TO CONTROL OR TEST THE WATER SUPPLY TO ANY SYSTEM OR PART OF THE SYSTEM.

COORDINATION NOTES

1. INSTALLING CONTRACTOR SHALL PREPARE A SHOP DRAWING SUBMITTAL PRIOR TO START OF WORK, THE FIRE SPRINKLER SYSTEM SUBMITTAL SHALL INCLUDE WORKING PLANS IN ACCORDANCE WITH NFPA13 SECTION 28.1 AND SUBMITTAL GUIDELINES OF THE AUTHORITY HAVING JURISDICTION (AHJ). DEVIATION FROM APPROVED PLANS SHALL REQUIRE PERMISSION OF THE AHJ PER NFPA 13, 28.1.2.
2. CONFIGURATION OF PIPING AND SPRINKLERS SHOWN ON THESE PLANS SHALL BE USED AS A BASIS FOR LAYOUT AND INSTALLATION. CHANGES IN ELEVATION SHALL BE UNDERTAKEN BY THE INSTALLING CONTRACTOR AS REQUIRED TO EFFECT COORDINATION WITH OTHER TRADES AND/OR MAINTAIN PROPER CLEARANCES. ALL SUCH REVISIONS SHALL BE SHOWN ON CONTRACTOR'S WORKING PLANS.
3. ALL DIMENSIONS SHOWN ON THESE PLANS ARE CENTERLINE-TO-CENTERLINE. INSTALLING CONTRACTOR SHALL INSPECT AND CONFIRM THE ACTUAL AS-BUILT CONDITIONS OF ALL WORK AREAS AND SHALL COORDINATE THE INSTALLATION OF FIXED FIRE PROTECTION SYSTEMS WITH ALL WORK BY OTHER TRADES.
   A. THE EXACT LOCATION AND ELEVATION OF INSTALLED PIPING AND THE CUT LENGTHS OF ALL PIPING AND HANGERS SHALL BE THE RESPONSIBILITY OF THE INSTALLING CONTRACTOR.
   B. INSTALLING CONTRACTOR SHALL COORDINATE THE INSTALLATION WITH OBSTRUCTIONS SUCH AS STRUCTURE, DUCTWORK, CABLE TRAYS AND OTHER SUCH BUILDING UTILITY SYSTEMS AND WORK BY OTHER TRADES.
   C. WHERE FIELD CONFLICTS REQUIRE THAT PIPING BE REVISED, SUCH CHANGES SHALL BE INCLUDED IN CONTRACTOR'S WORKING PLANS AND SUBMITTED TO ARCHITECT FOR REVIEW, TO ASSURE CONFORMANCE TO APPROVED DESIGN.
   D. CONTRACTOR SHALL NOT SUBMIT COPIES OF APPROVED CONSTRUCTION DOCUMENTS PRIOR TO COORDINATION OR IN LIEU OF COORDINATED WORKING PLANS.
4. WHERE PENDENT SPRINKLERS ARE SHOWN IN OR NEAR THE EXACT CENTER OF SUSPENDED CEILING TILES, CONTRACTOR SHALL BE CONFIRM THE ACTUAL TILE PATTERN AND SPRINKLER LOCATIONS, SO THAT THE FINAL INSTALLATION IS EXACTLY CENTERED. WHERE CEILING TILES ARE 2'X4' "SECOND LOOK" TYPE WITH 2'X2' MODULES, SPRINKLERS SHALL BE SHALL BE IN THE EXACT CENTER OF THE 2'X2' MODULE. WHERE CEILING TILES ARE CONVENTIONAL 2'X4', SPRINKLERS SHALL BE CENTERED IN THE 2' DIRECTION AND SHALL BE LOCATED AT LEAST 6" CLEAR FROM ANY T-BAR.
5. CONTRACTOR SHALL FURNISH AND COORDINATE CONNECTION POINTS BETWEEN FIRE SPRINKLER SYSTEM SIGNALING DEVICES AND THE FIRE DETECTION AND ALARM SYSTEM. THIS SHALL INCLUDE BUT IS NOT LIMITED TO THE LOCATION OF ALL BELLS AND HORNS, FLOW SWITCHES AND TAMPER SWITCHES REQUIRING CONNECTION TO THE FIRE ALARM AND SUPERVISORY SYSTEMS.
6. CONTRACTOR SHALL UNDERTAKE MEETINGS AND CORRESPONDENCE WITH ALL AGENCIES HAVING JURISDICTION, AS REQUIRED TO CONFIRM SPECIFIC REQUIREMENTS REGARDING LOCATIONS AND METHODS OF DISCHARGING WATER FROM TEST AND DRAIN LOCATIONS. WHERE SHOWN ON PLANS, ALL WASTEWATER SHALL DISCHARGE INTO DEDICATED RECEPTORS AND BE COORDINATED WITH THE PLUMBING AND SEWER DESIGNS.
14. WHERE REQUIRED BY THE SERVING FIRE DEPARTMENT (LOCAL FIRE AUTHORITY) ALL CONTROL VALVES SHALL BE SUPERVISED AND/OR LOCKED IN THE OPEN POSITION. COMMON KEYED PADLOCKS SUCH AS KNOX OR EQUIVALENT SHALL BE PROVIDED BY OTHERS.
15. ELECTRICAL ALARM SWITCHES AND BELLS, AS REQUIRED TO PROVIDE INTERCONNECTION TO THE FIRE ALARM SYSTEM AND TO PROVIDE AN AUDIBLE LOCAL WATERFLOW ALARM SHALL BE PROVIDED BY THE FIRE SPRINKLER CONTRACTOR. ALL ALARM DEVICES SHALL COMPLY WITH NFPA 72 AND BE U.L. LISTED AND/OR F.M. APPROVED, AND LISTED BY CALIFORNIA STATE FIRE MARSHAL:
   A. BELL OR OTHER AUDIBLE APPLIANCE (S) AS REQUIRED BY SERVING FIRE DEPARTMENT.
   B. WATERFLOW ALARM SWITCH FOR MAIN SYSTEM RISER AND ALL SECTIONAL/FLOOR CONTROL ASSEMBLIES AS REQUIRED.
   C. SUPERVISORY (TAMPER) SWITCHES ON ALL VALVES CONTROLLING FIRE PROTECTION WATER SUPPLIES.
16. EACH WATER FLOW ALARM SWITCH SHALL BE CONNECTED TO A 10" EXTERIOR ALARM BELL OR BELL/STROBE OR APPROVED HORN/STROBE UNIT, LOCATED A S APPROVED BY RESPONDING FIRE DEPARTMENT OR LOCAL FIRE AGENCY. FURNISH IDENTIFYING SIGNAGE AT EXTERIOR ALARM DEVICE. THERE SHALL BE ONE EXTERIOR AUDIBLE ALARM FOR EVERY SPRINKLER SYSTEM. WHERE A BUILDING FIRE ALARM SYSTEM IS INSTALLED, ACTUATION OF THE SPRINKLER SYSTEM SHALL ALSO ACTUATE THE FIRE ALARM SYSTEM.
17. ACTIVATION OF THE WATER FLOW ALARM SHALL SIGNAL THE FIRE ALARM SYSTEM AND/OR SOUND THE AUDIBLE ALARM IN ACCORDANCE WITH NFPA 72.
18. ALL WIRING OF ELECTRICAL ALARM DEVICES SHALL BE SPECIFIED IN OTHER SECTIONS OF THIS CONTRACT AND THE WORK DONE BY OTHERS.
19. POWER FOR ALL FIRE SPRINKLER ALARMS SHALL BE TAKEN FROM A DESIGNATED CIRCUIT FOR FIRE ALARM USE ONLY AND SHALL BE SUPPLIED AFTER THE METER BUT AHEAD OF THE MAIN PANEL DISCONNECT. PERMANENT POWER SUPPLY MUST BE IN SERVICE BEFORE FINAL INSPECTION BY AUTHORITIES HAVING JURISDICTION.
20. PIPING SHALL BE INSTALLED SO THAT ENTIRE SYSTEM CAN BE DRAINED THROUGH MAIN AND/OR AUXILIARY DRAIN VALVES IN ACCORDANCE WITH NFPA 13.
21. MAIN DRAIN, AUXILIARY DRAIN AND INSPECTOR'S TEST CONNECTIONS SHALL DISCHARGE TO AN APPROVED LOCATION CAPABLE OF SAFELY RECEIVING THE FULL FLOW DISCHARGE OF THE DRAIN OR TEST CONNECTION.
22. CONTRACTOR SHALL MAKE PIPING ABOVE SUSPENDED CEILING ACCESSIBLE TO FIRE DEPARTMENT PERSONNEL FOR VISUAL INSPECTIONS AS A CONDITION FOR FINAL APPROVAL.
23. ALL WELDED PIPE SHALL BE MADE AVAILABLE FOR INSPECTION BY AUTHORITIES HAVING JURISDICTION BEFORE START OF INSTALLATION. CERTIFIED WELDER SHALL PROVIDE I.D. STAMP ON EACH WELD.
24. BUILDING SPRINKLER SYSTEM SHALL NOT CONNECT TO SITE UNDERGROUND MAIN UNTIL SITE PIPING HAS BEEN TESTED AND FLUSHED PER NFPA 13 AND/OR ALL TESTING AND FLUSHING SHALL BE WITNESSED AND APPROVED BY PROJECT INSPECTOR OF RECORD AND/OR AUTHORITIES HAVING JURISDICTION. INSTALLING CONTRACTOR SHALL EXECUTE AND FURNISH A COMPLETED AND SIGNED COPY OF THE "CONTRACTOR'S MATERIAL & TEST CERTIFICATE FOR UNDERGROUND PIPING"PER NFPA 13.WHEN UNDERGROUND PIPING IS TESTED AND FLUSHED BUT NOT IMMEDIATELY CONNECTED TO THE BUILDING SYSTEM PIPING, IT SHALL BE CAPPED OR OTHERWISE PROTECTED AGAINST ENTRY OF DEBRIS, DIRT OR ANIMALS.
25. ALL PIPING AND ATTACHED APPURTENANCES SHALL BE HYDROSTATICALLY TESTED AT 200 PSI OR 50 PSI OVER THE MAXIMUM SYSTEM WORKING PRESSURE, WHICHEVER IS GREATER, FOR A PERIOD OF AT LEAST TWO HOURS WITH NO LOSS OF PRESSURE. HYDROSTATIC TESTING SHALL BE WITNESSED AND ATTESTED TO BY PROJECT INSPECTOR OF RECORD AND/OR AUTHORITIES HAVING JURISDICTION.
26. UPON COMPLETION OF ALL TESTS AND INSPECTIONS, BUILDING SYSTEM CONTRACTOR SHALL EXECUTE AND FURNISH A COMPLETED AND SIGNED COPY OF THE "CONTRACTOR'S MATERIAL & TEST CERTIFICATE FOR ABOVEGROUND PIPING" PER NFPA 13.
27. UPON OCCUPANCY OF THE BUILDING, THE OWNER SHALL BE RESPONSIBLE FOR CONFORMANCE TO THE REQUIREMENTS OF TITLE 19 AND THE CALIFORNIA FIRE CODE FOR INSPECTIONS, TESTING AND MAINTENANCE OF THE SPRINKLER SYSTEM (S. AS-BUILT DRAWINGS SHALL BE KEPT ON PREMISES FOR THREE YEARS AND/OR IN THE CUSTODY OF THE OWNER OR DESIGNATED REPRESENTATIVE FOR THE LIFE OF THE BUILDING.

WATER DEPARTMENT NOTES

1. ARRANGEMENT OF FIRE PROTECTION WATER SUPPLY AND DEVICES SHALL STRICTLY CONFORM TO THE REQUIREMENTS OF CITY OF SAN DIEGO WATER UTILITIES DEPARTMENT.
2. BACKFLOW PREVENTION DEVICE TO BE REDUCED PRESSURE DETECTOR ASSEMBLY (RPDA). ASSEMBLY SHALL BE FURNISHED WITH 2 U.L. LISTED BUTTERFLY GATE VALVES, EQUIPPED WITH APPROVED TAMPER SWITCHES. BACKFLOW ASSEMBLY SHALL BE UL, CLASSIFIED, AND AWWA APPROVED FOR FIRE SERVICE INSTALLATIONS AND LISTED BY THE CROSS-CONNECTION INSTITUTE AT THE UNIVERSITY OF SOUTHERN CALIFORNIA.
3. BACKFLOW PREVENTION ASSEMBLY SHALL BE TESTED UPON INSTALLATION BY ACERTIFIED BACKFLOW TECHNICIAN, PRIOR TO ACCEPTANCE OF BACKFLOW ASSEMBLY BY THE WATER DEPARTMENT.
4. CONTRACTOR SHALL FURNISH VALVE SUPPORT STANDS AS REQUIRED AND SHALL MAINTAIN ALL INSTALLATION CLEARANCES AND HEIGHTS AS SHOWN ON THE DRAWINGS AND STANDARD DETAILS FOR THE SERVING WATER DEPARTMENT.
5. CONCRETE SLAB TO BE MINIMUM 4" THICK AND SLOPED TO DRAIN. PAD ELEVATION TO BE 1" ABOVE FINISH GRADE IN LAWN AREAS AND 2" ABOVE FINISH GRADE IN ALL OTHER AREAS. OVERALL ALL DIMENSIONS OF PAD SHALL BE AS SHOWN ON THE DRAWINGS AND STANDARD DETAILS FOR THE SERVING WATER AND FIRE DEPARTMENTS.

VICINITY MAP

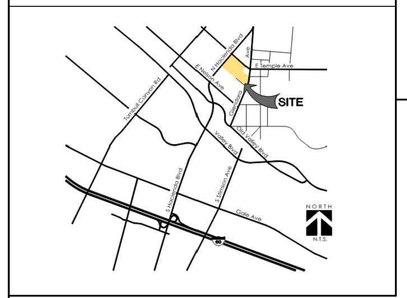

GENERAL CODE DATA

GOVERNING CODES:
BUILDING CODE: CALIFORNIA BUILDING CODE, 2022 ED.
FIRE CODE: CALIFORNIA FIRE CODE, 2022 ED

TYPE OF CONSTRUCTION: TYPE V
OCCUPANCY CLASS: GROUP A-3
FIRE SPRINKLERED IN LIEU OF RATED CONSTRUCTION: NO
NUMBER OF STORIES: 1
BUILDING HEIGHT: 40' - 0"
TOTAL BLDG AREA: 4,071.5 SQ. FT.

SHEET INDEX

F100	FIRE PROTECTION GENERAL NOTES
F101	UNDERGROUND SITE FIRE PIPING PLAN
F200	PIPING PLAN
F300	BUILDING SECTIONS
F400	FIRE PROTECTION DETAILS
F401	FIRE PROTECTION DETAILS

SCOPE OF WORK

FURNISH NEW WET-PIPE AUTOMATIC FIRE SPRINKLER SYSTEM PER N.F.P.A. 13, 2022 ED. AT CITY OF LA PUENTE ACTIVITY CENTER.

DESIGN NOTES

1. SPRINKLERS
   A. LOCATION: ACTIVITY ROOM
      HAZARD GROUP: DA-01
      DISCHARGE DENSITY: 0.10
      OR AREA REDUCTION: NO
      HOSE STREAM ALLOWANCE
      OUTSIDE: 100
      INSIDE:
      COMBINED: 100
   B. CONSTRUCTION CLASSIFICATION
      TYPE: NON-OBSTRUCTED / NON-COMBUSTIBLE
      DEFLECTOR DISTANCE: 12" MAX.
2. UNDERGROUND PIPE TYPES (SEE PIPE TABLES)
   A. UNDERGROUND MAINS: C-900 PVC, CLASS 200
   B. UNDERGROUND TRANSITIONS THROUGH WALLS AND UNDER FOOTINGS: AWWA C151 DUCTILE IRON, CLASS 350 OR TYPE 304 STAINLESS STEEL
3. BUILDING SYSTEM PIPE TYPES. (SEE PIPE TABLES)
   A. MAIN PIPING: BLACK STEEL, SCHEDULE 10
      FITTINGS: GROOVED/WELDED
   B. BRANCH PIPING: BLACK STEEL, SCHEDULE 40
      FITTINGS: THREADED CAST/MALLEABLE IRON
4. SEE SPRINKLER LEGEND ON PLANS FOR SPACING OF SPRINKLERS AND FINISHES

ARCHITECT
westbergwhite architecture
1775 HANCOCK ST, SUITE 120
SAN DIEGO, CA 92110
619.542.1188 619.542.1663 FAX
LICENSED ARCHITECT FRASCO WHITE C-9090 EXP. 10-2025 STATE OF CALIFORNIA

CONSULTANT
PROTECTION DESIGN AND CONSULTING
2851 Camino Del Rio S. # 210
San Diego, California 92108
www.protectiondesign.com
phone 619.255.8964
fax 619.255.9547
REGISTERED PROFESSIONAL ENGINEER JONATHON S. MITCHELL FP 1559 Exp 06/26 FIRE PROTECTION STATE OF CALIFORNIA

City of La Puente
15900 E. MAIN ST, LA PUENTE, CA. 91744

FIRE PROTECTION GENERAL NOTES

La Puente ACTIVITY CENTER
501 GLENDORA AVE, LA PUENTE, CA. 91744

PROJECT NO.: 22008
R.S. A.P.
FILE NAME
DATE: 12/05/2025 DRAWN CHECKED
REVISIONS
SHEET NO. F100

CITY APPROVAL

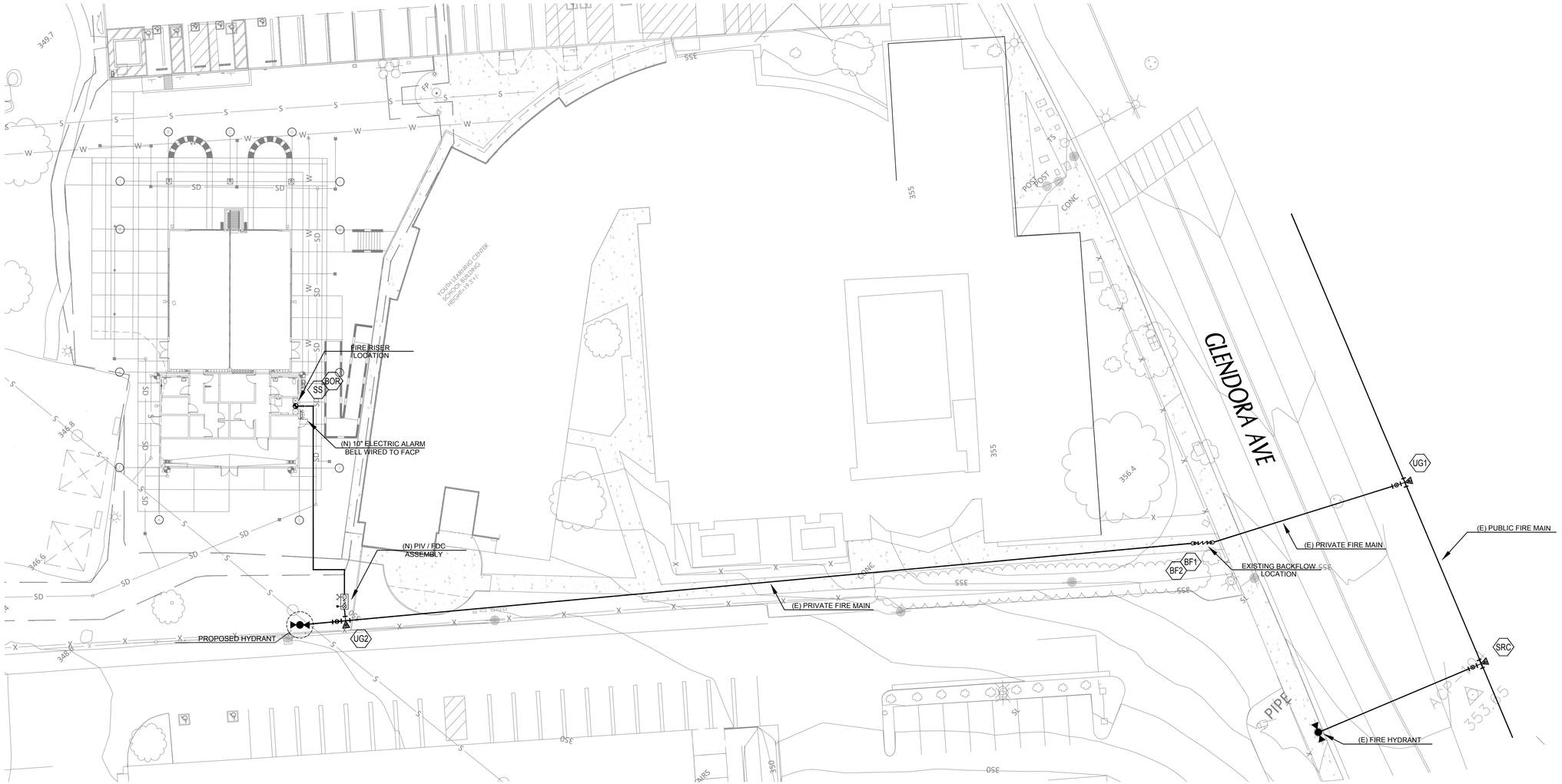

UNDERGROUND SITE FIRE PIPING PLAN

PLAN NORTH

SCALE: 1" = 20'-0"

0' 10' 20' 40' 60'

ARCHITECT

westbergwhite architecture

1775 HANCOCK ST. SUITE 120
SAN DIEGO, CA 92110
619.542.1188 619.542.1663 FAX

LICENSED ARCHITECT FRASCO WHITE C-8090 EXP. 10-2025 STATE OF CALIFORNIA

CONSULTANT

PROTECTION DESIGN AND CONSULTING

2851 Camino Del Rio S. # 210
San Diego, California 92108
www.protectiondesign.com
phone 619.255.8964
fax 619.255.9547

REGISTERED PROFESSIONAL ENGINEER JONATHON S. MITCHELL FP 1559 Exp 06/26 FIRE PROTECTION STATE OF CALIFORNIA

City of La Puente

15900 E. MAIN ST. LA PUENTE, CA. 91744

UNDERGROUND SITE FIRE PIPING PLAN

La Puente ACTIVITY CENTER

501 GLENDORA AVE. LA PUENTE, CA. 91744

PROJECT NO.: 22008

R.S. A.P.

FILE NAME

DATE: 12/05/2025 DRAWN CHECKED

REVISIONS

SHEET NO. F101

CITY APPROVAL

G:\Work In Progress\2023\23-19 La Puente Activity Center\FIRE\2025-04-07\CAD\23-19 FP-1.0 - LA PUENTE.dwg Apr 08, 2025 - 6:00pm scesena

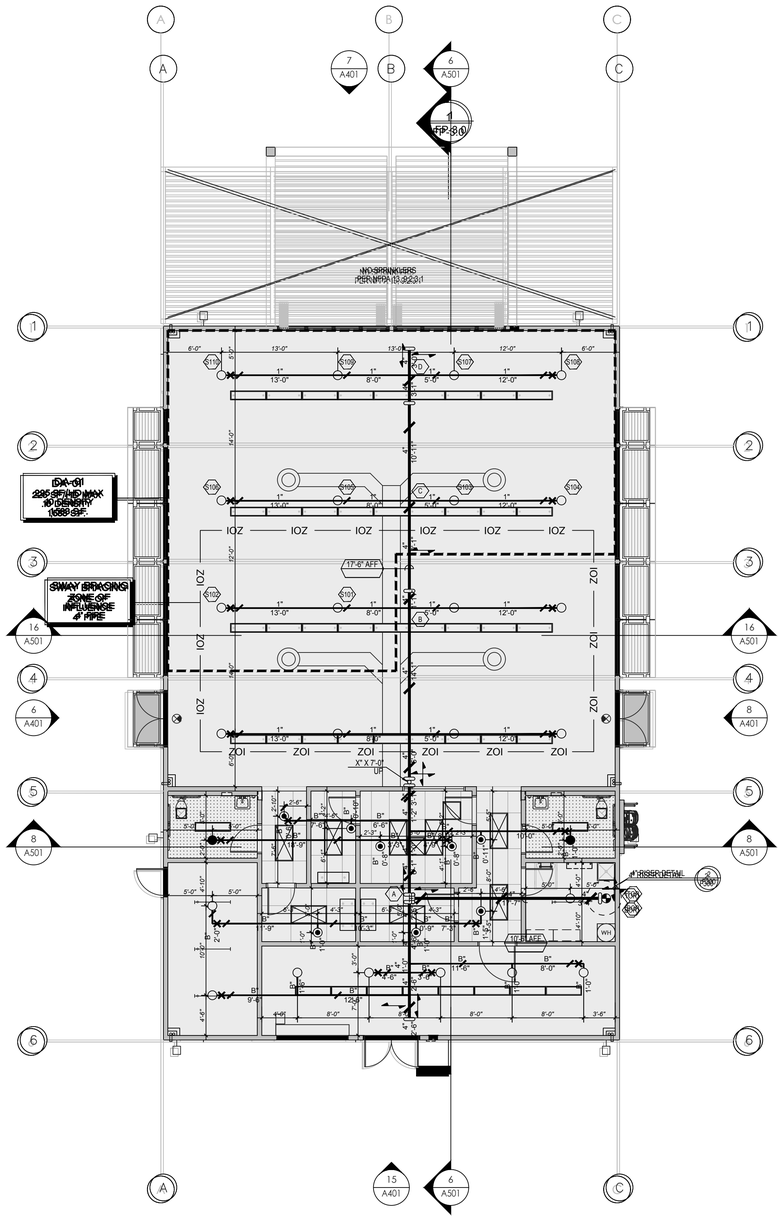

PIPING PLAN

SCALE: 1/8" = 1'-0"

PROJECT NORTH

HYDRAULIC SYSTEM

This building is protected by a Hydraulically Designed Automatic Sprinkler System

Location ACTIVITY ROOM DA-01

Sprinkler Information

NUMBER OF FLOWING SPRINKLERS	10
MANUFACTURE	VIKING
MODEL	VK300
200°	QUICK RESPONSE
1/2" ORIFICE	5.6 K-FACTOR

Basis of Design

STANDARD	NFPA 13, 2022 EDITION
HAZARD GROUP	LIGHT HAZARD
DENSITY	0.10 GPM/SQ. FT.
DESIGNED AREA OF DISCHARGE	1,583 SQ. FT.

System Demand

GPM DEMAND AT THE BASE OF THE RISER	194.1 GPM
RESIDUAL PRESSURE AT THE BASE OF THE RISER	27.5 PSI
GPM DEMAND AT THE WATER SUPPLY SOURCE	294.1 GPM
RESIDUAL PRESSURE AT THE WATER SUPPLY SOURCE	42.21 PSI
HOSE STREAM ALLOWANCE	100 GPM INSIDE 0 GPM OUTSIDE 100 GPM TOTAL
REMOTE SPRINKLER FLOW	10.2 GPM @ 10.6 PSI
SAFETY PRESSURE	17.05 PSI

INSTALLATION NOTES:

PIPE TYPES

1. MAINS TO BE BLACK SCHEDULE 10 STEEL PIPE, U.O.N.
2. LINES TO BE BLACK SCHEDULE 40 STEEL PIPE, U.O.N.

PIPE SIZES

1. MAINS TO BE 4" NOMINAL DIAMETER PIPE, U.O.N.
2. BRANCHLINES TO BE 1" NOMINAL DIAMETER PIPE, U.O.N.
3. ARM-OVERS AND DROPS TO BE 1" NOMINAL DIAMETER PIPE, U.O.N.

HANGERS

1. HANG LINES & MAINS TO WOOD STRUCTURE PER DETAIL

DENOTES HANGER LOCATION — 3 - 6 / F400

2. FURNISH RESTRAINING TYPE HANGERS AT THE ENDS OF ALL BRANCHLINES, AND AT EVERY DISTANCE ALONG THE LINES MENTIONED IN THE RESTRAINT SPACING TABLE BELOW.

DENOTES LATERAL RESTRAINT — 7 - 8 / F400

4. SEE SHEET F400 FOR DETAILS

MAXIMUM SPACING OF RESTRAINTS (ft)
STEEL PIPE

LA PUENTE ACTIVITY CENTER (Sds=1.163 Cp = 0.8769)

	SEISMIC COEFFICIENT (Cp)			
PIPE SIZE	Cp<0.50	0.5≤Cp≤0.71	Cp>0.71	Cp≥1.40
1"	43'	36'	29'	22'
1-1/4"	46'	39'	27'	24'
1-1/2"	49'	41'	29'	25'
2"	53'	45'	31'	27'

SWAY BRACING

SWAY BRACING SHALL BE PER NFPA 13, 2022 ED AND CBC, 2022 ED. SEE F401 FOR THE DETAILS AND CALCULATIONS. WHERE HANGER RODS ARE LESS THAN 6" IN LENGTH, LATERAL SWAY BRACING MAY BE OMITTED.

DENOTES SWAY BRACE — 2 - 7 / F401

DENOTES 4-WAY SWAY BRACE. A SWAY BRACE ASSEMBLY COULD INCLUDE A LATERAL & LONGITUDINAL BRACE IN COMBINATION — 1 / F401

DENOTES FIRESTOP PER — 1 - 2 / F400

FIRE SPRINKLER LEGEND

SYM	LOCATION	MFR	MODEL	SIN	SR/QR	K-FAC	TYPE	TEMP	FIN	THRD	SPACING MIN/MAX	AREA	ESCUTCHEON TYPE	FIN	COMMENTS	TOTAL
◉	FINISHED CEILING	VIKING	MICROFAST	VK302	QR	5.6K	SSP	200°	WHITE	1/2"	6'-0" / 15'-0"	225 S.F.	CONCEALED	WHITE		8
●	FINISHED CEILING	VIKING	MICROFAST	VK462	QR	5.6K	SSP	200°	WHITE	1/2"	6'-0" / 15'-0"	225 S.F.	CONCEALED	WHITE		2
○	OPEN CEILING	VIKING	MICROFAST	VK300	QR	5.6K	SSU	200°	BRASS	1/2"	6'-0" / 15'-0"	225 S.F.	N/A	BRASS		24
															TOTAL THIS SHEET	34

ARCHITECT

westbergwhite architecture
1775 HANCOCK ST, SUITE 120
SAN DIEGO, CA 92110
619.542.1188 619.542.1663 FAX

LICENSED ARCHITECT FRISCO WHITE C-9090 EXP. 10-2025 STATE OF CALIFORNIA

CONSULTANT

PROTECTION DESIGN AND CONSULTING
2851 Camino Del Rio S. # 210
San Diego, California 92108
www.protectiondesign.com
phone 619.255.8964
fax 619.255.9547

REGISTERED PROFESSIONAL ENGINEER JONATHAN S. MITCHELL FP 1559 Exp 06/26 FIRE PROTECTION STATE OF CALIFORNIA

City of La Puente
15900 E. MAIN ST. LA PUENTE, CA. 91744

PIPING PLAN

La Puente ACTIVITY CENTER
501 GLENDORA AVE. LA PUENTE, CA. 91744

PROJECT NO.: 22008
R.S. A.P.
FILE NAME
DATE: 12/05/2025 DRAWN CHECKED
REVISIONS SHEET NO. F200

CITY APPROVAL

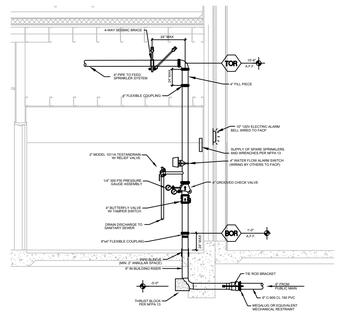

4" RISER DETAIL

2
F300

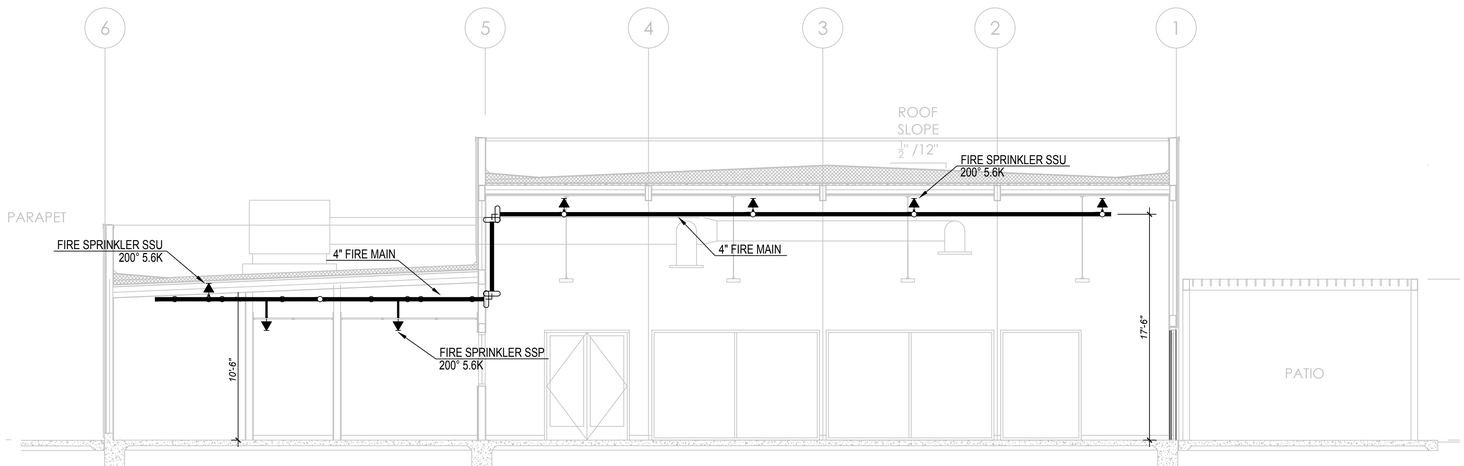

BUILDING SECTION 1

SCALE: 3/16" = 1'-0"

0' 2' 4' 8' 16'

1
F300

ARCHITECT

westbergwhite architecture
1775 HANCOCK ST, SUITE 120
SAN DIEGO, CA 92110
619.542.1188 619.542.1663 FAX

LICENSED ARCHITECT FRASCO WHITE C-9090 EXP. 10-2025 STATE OF CALIFORNIA

CONSULTANT

PROTECTION DESIGN AND CONSULTING
2851 Camino Del Rio S. # 210
San Diego, California 92108
www.protectiondesign.com
phone 619.255.8964
fax 619.255.9547

REGISTERED PROFESSIONAL ENGINEER JONATHON S. MITCHELL FP 1559 Exp 06/26 FIRE PROTECTION STATE OF CALIFORNIA

City of La Puente
15900 E. MAIN ST. LA PUENTE, CA. 91744

BUILDING SECTIONS

La Puente ACTIVITY CENTER
501 GLENDORA AVE. LA PUENTE, CA. 91744

PROJECT NO.: 22008
R.S. A.P.
FILE NAME
DATE: 12/05/2025
DRAWN
CHECKED
REVISIONS
SHEET NO.
F300

CITY APPROVAL

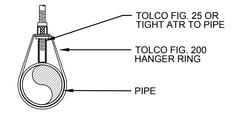

ROD STIFFENER DETAIL

NOT TO SCALE — SHOWN ON PLAN AS 6 / FP400

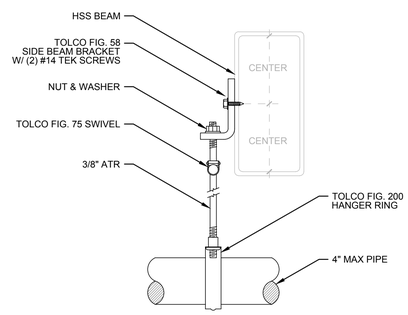

HSS BOX BEAM HANGER DETAIL

NOT TO SCALE — SHOWN ON PLAN AS 5 / FP400

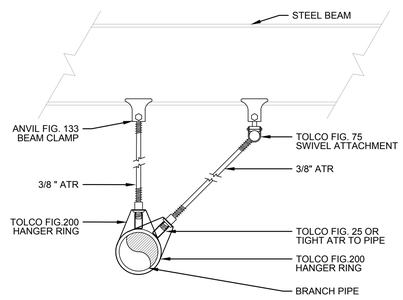

STEEL STRUCTURE RESTRAINT DETAIL

NOT TO SCALE — SHOWN ON PLAN AS 8 / FP400

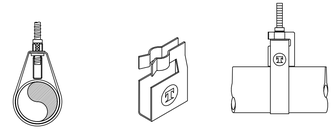

TOLCO FIG. 25 SURGE RESTRAINT

TYPE 1- FOR 1" AND 1-1/4" PIPE AND HANGER
TYPE 2 - FOR 1-1/2" AND 2" PIPE AND HANGER

TOLCO FIG. 25 IS DESIGNED TO BE USED ONLY WITH TOLCO BAND HANGERS FIG. 200 TO RESTRAIN THE UPWARD MOVEMENT OF PIPE AS IT OCCURS DURING SPRINKLER HEAD ACTIVATION OR SEISMIC ACTIVITY

LATERAL RESTRAINTS SHALL BE LOCATED WITHIN 2'-0" OF HANGER. THIS HANGER SHALL BE USED ALONG WITH VERTICAL RESTRAINTS.

VERTICAL RESTRAINT DETAIL

NOT TO SCALE — SHOWN ON PLAN AS 7 / FP400

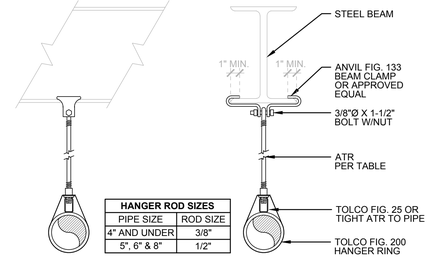

HANGER ROD SIZES	
PIPE SIZE	ROD SIZE
4" AND UNDER	3/8"
5", 6" & 8"	1/2"

BEAM CLAMP HANGER DETAIL

NOT TO SCALE — SHOWN ON PLAN AS 4 / FP400

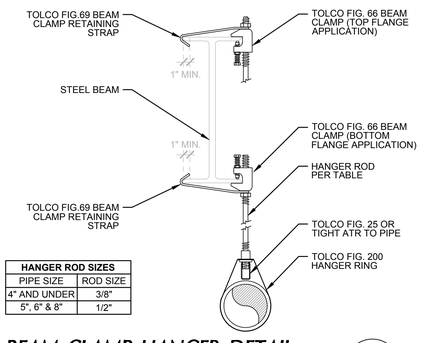

HANGER ROD SIZES	
PIPE SIZE	ROD SIZE
4" AND UNDER	3/8"
5", 6" & 8"	1/2"

BEAM CLAMP HANGER DETAIL

NOT TO SCALE — SHOWN ON PLAN AS 3 / FP400

CLASSIFIED c UL US
Classified by Underwriters Laboratories, Inc. to UL 1479 and CAN/ULC-S115

System No. W-L-1054

ANSI/UL1479 (ASTM E814)	CAN/ULC S115
F Ratings —1 and 2 Hr (See Items 1 and 3)	F Ratings — 1 and 2 Hr (See Items 1 and 3)
T Rating — 0 Hr	FT Rating — 0 Hr
L Rating at Ambient — Less Than 1 CFM/sq ft	FH Ratings —1 and 2 Hr (See Items 1 and 3)
L Rating at 400 F — Less Than 1 CFM/sq ft	FTH Rating — 0 Hr
	FTH Rating — 0 Hr
	L Rating at Ambient — Less Than 1 CFM/sq ft L Rating at 400 F — Less Than 1 CFM/sq ft

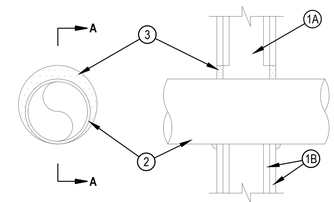

SECTION A-A

1. WALL ASSEMBLY — THE 1 OR 2 HR FIRE-RATED GYPSUM WALLBOARD/STUD WALL ASSEMBLY SHALL BE CONSTRUCTED OF THE MATERIALS AND IN THE MANNER SPECIFIED IN THE INDIVIDUAL U300 OR U400 SERIES WALL AND PARTITION DESIGNS IN THE UL FIRE RESISTANCE DIRECTORY AND SHALL INCLUDE THE FOLLOWING CONSTRUCTION FEATURES:

   A. STUDS — WALL FRAMING MAY CONSIST OF EITHER WOOD STUDS OR STEEL CHANNEL STUDS. WOOD STUDS TO CONSIST OF NOM 2 BY 4 IN. (51 BY 102 MM) LUMBER SPACED 16 IN. (406 MM) OC. STEEL STUDS TO BE MIN 2-1/2 IN. (64 MM) WIDE AND SPACED MAX 24 IN. (610 MM) OC. WHEN STEEL STUDS ARE USED AND THE DIAM OF OPENING EXCEEDS THE WIDTH OF STUD CAVITY, THE OPENING SHALL BE FRAMED ON ALL SIDES USING LENGTHS OF STEEL STUD INSTALLED BETWEEN THE VERTICAL STUDS AND SCREW-ATTACHED TO THE STEEL STUDS AT EACH END. THE FRAMED OPENING IN THE WALL SHALL BE 4 TO 6 IN. (102 TO 152 MM) WIDER AND 4 TO 6 IN. (102 TO 152 MM) HIGHER THAN THE DIAM OF THE PENETRATING ITEM SUCH THAT, WHEN THE PENETRATING ITEM IS INSTALLED IN THE OPENING, A 2 TO 3 IN. (51 TO 76 MM) CLEARANCE IS PRESENT BETWEEN THE PENETRATING ITEM AND THE FRAMING ON ALL FOUR SIDES.
   B. GYPSUM BOARD* — 5/8 IN. (16 MM) THICK, 4 FT (122 CM) WIDE WITH SQUARE OR TAPERED EDGES. THE GYPSUM BOARD TYPE, THICKNESS, NUMBER OF LAYERS, FASTENER TYPE AND SHEET ORIENTATION SHALL BE AS SPECIFIED IN THE INDIVIDUAL U300 OR U400 SERIES DESIGN IN THE UL FIRE RESISTANCE DIRECTORY. MAX DIAM OF OPENING IS 32-1/4 IN. (819 MM) FOR STEEL STUD WALLS. MAX DIAM OF OPENING IS 14-1/2 IN. (368 MM) FOR WOOD STUD WALLS.

   THE F AND FH RATINGS OF THE FIRESTOP SYSTEM ARE EQUAL TO THE FIRE RATING OF THE WALL ASSEMBLY.

2. THROUGH-PENETRANTS — ONE METALLIC PIPE, CONDUIT OR TUBING TO BE INSTALLED EITHER CONCENTRICALLY OR ECCENTRICALLY WITHIN THE FIRESTOP SYSTEM. THE ANNULAR SPACE SHALL BE MIN 0 IN. TO MAX 2-1/4 IN. (57 MM). PIPE MAY BE INSTALLED WITH CONTINUOUS POINT CONTACT. PIPE, CONDUIT OR TUBING MAY BE INSTALLED AT AN ANGLE NOT GREATER THAN 45 DEGREES FROM PERPENDICULAR. PIPE, CONDUIT OR TUBING TO BE RIGIDLY SUPPORTED ON BOTH SIDES OF WALL ASSEMBLY. THE FOLLOWING TYPES AND SIZES OF METALLIC PIPES, CONDUITS OR TUBING MAY BE USED:

   A. STEEL PIPE — NOM 30 IN. (762 MM) DIAM (OR SMALLER) SCHEDULE 10 (OR HEAVIER) STEEL PIPE.
   B. IRON PIPE — NOM 30 IN. (762 MM) DIAM (OR SMALLER) CAST OR DUCTILE IRON PIPE.
   C. CONDUIT — NOM 4 IN. (102 MM) DIAM (OR SMALLER) STEEL ELECTRICAL METALLIC TUBING OR 6 IN. (152 MM) . DIAM STEEL CONDUIT.
   D. COPPER TUBING — NOM 6 IN. (152 MM) DIAM (OR SMALLER) TYPE L (OR HEAVIER) COPPER TUBING.
   E. COPPER PIPE — NOM 6 IN. (152 MM) DIAM (OR SMALLER) REGULAR (OR HEAVIER) COPPER PIPE.

3. FILL, VOID OR CAVITY MATERIAL* — SEALANT — MIN 5/8 IN. (16 MM) THICKNESS OF FILL MATERIAL APPLIED WITHIN THE ANNULUS, FLUSH WITH BOTH SURFACES OF WALL. AT THE POINT OR CONTINUOUS CONTACT LOCATIONS BETWEEN PIPE AND WALL. A MIN 1/2 IN. (13 MM) DIAM BEAD OF FILL MATERIAL SHALL BE APPLIED AT THE PIPE WALL INTERFACE ON BOTH SURFACES OF WALL.

HILTI CONSTRUCTION CHEMICALS, DIV OF HILTI INC — FS-ONE SEALANT OR FS-ONE MAX INTUMESCENT SEALANT

* INDICATES SUCH PRODUCTS SHALL BEAR THE UL OR CUL CERTIFICATION MARK FOR JURISDICTIONS EMPLOYING THE UL OR CUL CERTIFICATION (SUCH AS CANADA), RESPECTIVELY.

GYP-WALL FIRE STOP PENETRATION

NO SCALE — SHOWN ON PLAN AS 2 / FP400

UL/cUL SYSTEM NO. C-AJ-1154
METAL PIPE THROUGH CONCRETE FLOOR/WALL OR BLOCK WALL
F RATING = 3-HR.
T RATING = 1/4-HR.
L RATING AT AMBIENT = LESS THAN 1 CFMISQ.FT
L RATING AT 400oF = 4 CFM / SQ

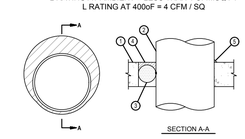

1. CONCRETE FLOOR OR WALL ASSEMBLY (3-HR. FIRE-RATING):
   A. LIGHTWEIGHT OR NORMAL WEIGHT CONCRETE FLOOR OR WALL (MINIMUM 4-1/2" THICK).
   B. ANY UL/cUL CLASSIFIED CONCRETE BLOCK WALL
2. PENETRATING ITEM TO BE ONE OF THE FOLLOWING :
   A. MAXIMUM 10" NOMINAL DIAMETER STEEL PIPE (SCHEDULE 10 OR HEAVIER).
   B. MAXIMUM 4" NOMINAL DIAMETER COPPER PIPE.
   C. MAXIMUM 4" NOMINAL DIAMETER STEEL CONDUIT.
   D. MAXIMUM 4" NOMINAL DIAMETER EMT.
3. BACKER ROD, HILTI CF-AS CJP ALL SEASONS CRACK AND JOINT INSULATING FOAM, HILTICF 812 WINDOW AND DOOR PRO LOW-PRESSURE FILLER FOAM, OR MINERAL WOOL TO BE USED AS A BACKER.
4. MINIMUM 1/2" DEPTH HILTI FS-ONE MAX INTUMESCENT FIRESTOP SEALANT.
5. MINIMUM 1/2" BEAD HILTI FS-ONE MAX INTUMESCENT FIRESTOP SEALANT APPLIED AT POINT OF CONTACT.

NOTES :
1. MAXIMUM DIAMETER OF OPENING = 14".
2. ANNULAR SPACE = MINIMUM 0", MAXIMUM 3-1/4".
3. MINIMUM 1/2" DEPTH HILTI FS-ONE MAX INTUMESCENT FIRESTOP SEALANT IS REQUIRED ON BOTH SIDES OF A WALL A

CONC. FIRE STOP PENETRATION

NOT TO SCALE — SHOWN ON PLAN AS 1 / FP400

ARCHITECT
westbergwhite architecture
1775 HANCOCK ST, SUITE 120
SAN DIEGO, CA 92110
619.542.1188 619.542.1663 FAX
LICENSED ARCHITECT FRISCO WHITE C-9090 EXP. 10-2025 STATE OF CALIFORNIA

CONSULTANT
PROTECTION DESIGN AND CONSULTING
2851 Camino Del Rio S. # 210
San Diego, California 92108
www.protectiondesign.com
phone 619.255.8964
fax 619.255.9547
REGISTERED PROFESSIONAL ENGINEER JONATHAN S. MITCHELL FP 1559 Exp 06/26 FIRE PROTECTION STATE OF CALIFORNIA

City of La Puente
15900 E. MAIN ST., LA PUENTE, CA. 91744

FIRE PROTECTION DETAILS

La Puente ACTIVITY CENTER
501 GLENDORA AVE. LA PUENTE, CA. 91744

PROJECT NO.: 22008
R.S. A.P.
FILE NAME
DATE: 12/05/2025 DRAWN CHECKED
REVISIONS
SHEET NO. F400

CITY APPROVAL

TOLBrace™ Seismic Bracing Calculations

V8.8.137

Project Address: LA PUENTE ACTIVITY CENTER
15900 E. MAIN ST.
LA PUENTE, CA
Job # 23-19

Contractor: Protection Design and Const
Address: 2851 Camino del Rio South
San Diego, CA, 92108
Phone:
License:

EATON — Powering Business Worldwide

Calculations based on 2022 NFPA Pamphlet #13

Brace Information

Maximum Brace Length	7' 0" (2.134 m)
Diameter of Brace	1"
Type of Brace	Sch.40
Angle of Brace	60° Min.
Least Rad. of Gyration	0.42" (11 mm)
L/R Value	200
Max Horizontal Load	1604 lbs (728 kg)

TOLCO™ Brace Components

TOLCO™ Component	Listed Load	Adjusted Load
Fig. 1001 Clamp	2000 lbs (907 kg)	1732 lbs (786 kg)
Fig.980 - 1/2" Universal Swivel	2100 lbs (953 kg)	1819 lbs (825 kg)
See Fastener Information		

*Calculation Based on CONCENTRIC Loading
*Please Note: These calculations are for TOLCO™ components only. Use of any other components voids these calculations and the listing of the assembly.

Fastener Information

Orientation to Connecting Surface	NFPA Type C
Fastener	
Type	1/2in. Unfinished Steel Bolt
Diameter	1/2in.
Length	N/A
Maximum Load	2550 lbs (1157 kg)
Prying Factor	N/A

Seismic Brace Assembly Detail

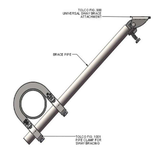

Brace Identification on Plans 4" LAT TO STEEL
Brace Type Lateral [X] Longitudinal [ ] 4-Way [ ]

Sprinkler System Load Calculation (Fpw = CpWp)
Cp = 0.88

Diameter	Type	Length	Total Length	Weight Per Unit Length	Total Weight
4" (100 mm)	Sch. 10	25 ft (7.6 m)	25 ft (7.6 m)	11.78 lb/ft (17.53 kg/m)	294 lbs (133 kg)
1" (25 mm)	Sch. 40	80 ft (24.4 m)	80 ft (24.4 m)	2.05 lb/ft (3.05 kg/m)	164 lbs (74 kg)

Subtotal Weight	458 lbs (208 kg)
Wp (incl. 15%)	527 lbs (239 kg)
Total (Fpw)	463 lbs (210 kg)
Maximum Fpw per 18.5.5.2 (if applicable)	1307 lb (592 kg)

Main Size	Type/Sch.	Spacing (ft)
4"	Sch. 10	29

(TOLBrace™ Version 8) Use of TOLBrace™ is subject to terms and conditions per the end user license agreement

4" LATERAL TO STEEL

TOLBrace™ Seismic Bracing Calculations

V8.8.137

Project Address: LA PUENTE ACTIVITY CENTER
15900 E. MAIN ST.
LA PUENTE, CA
Job # 23-19

Contractor: Protection Design and Const
Address: 2851 Camino del Rio South
San Diego, CA, 92108
Phone:
License:

EATON — Powering Business Worldwide

Calculations based on 2022 NFPA Pamphlet #13

Brace Information

Maximum Brace Length	7' 0" (2.134 m)
Diameter of Brace	1"
Type of Brace	Sch.40
Angle of Brace	60° Min.
Least Rad. of Gyration	0.42" (11 mm)
L/R Value	200
Max Horizontal Load	1604 lbs (728 kg)

TOLCO™ Brace Components

TOLCO™ Component	Listed Load	Adjusted Load
Fig. 4L Clamp	2000 lbs (907 kg)	1732 lbs (786 kg)
Fig.980 - 1/2" Universal Swivel	2100 lbs (953 kg)	1819 lbs (825 kg)
See Fastener Information		

*Calculation Based on CONCENTRIC Loading
*Please Note: These calculations are for TOLCO™ components only. Use of any other components voids these calculations and the listing of the assembly.

Fastener Information

Orientation to Connecting Surface	NFPA Type C
Fastener	
Type	1/2in. Unfinished Steel Bolt
Diameter	1/2in.
Length	N/A
Maximum Load	2550 lbs (1157 kg)
Prying Factor	N/A

Seismic Brace Assembly Detail

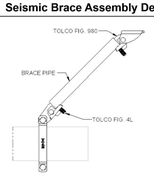

Brace Identification on Plans 4" LONG TO STEEL
Brace Type Lateral [ ] Longitudinal [X] 4-Way [ ]

Sprinkler System Load Calculation (Fpw = CpWp)
Cp = 0.88

Diameter	Type	Length	Total Length	Weight Per Unit Length	Total Weight
4" (100 mm)	Sch. 10	50 ft (15.2 m)	50 ft (15.2 m)	11.78 lb/ft (17.53 kg/m)	589 lbs (267 kg)

Subtotal Weight	589 lbs (267 kg)
Wp (incl. 15%)	677 lbs (307 kg)
Total (Fpw)	596 lbs (270 kg)
Maximum Fpw per 18.5.5.2 (if applicable)	N/A

Main Size	Type/Sch.	Spacing (ft)
4"	Sch. 10	50

(TOLBrace™ Version 8) Use of TOLBrace™ is subject to terms and conditions per the end user license agreement

4" LONGITUDINAL TO STEEL

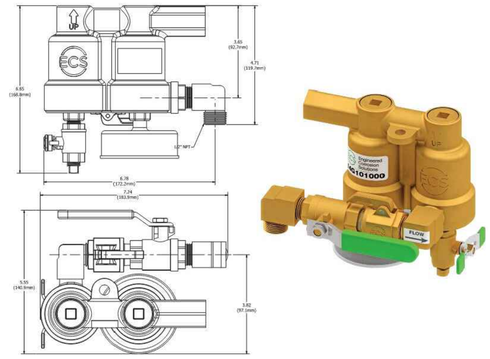

NOTE: IT IS THE CONTRACTOR'S RESPONSIBILITY TO SELECT THE SYSTEM HIGHEST POINT

AIR VENT DEVICE

NOT TO SCALE — 6 / F401

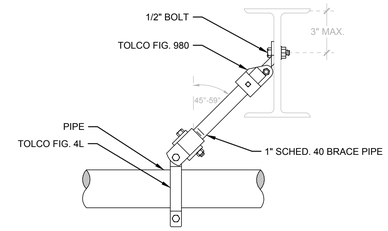

LONGITUDINAL EQB TO STEEL BEAM

NOT TO SCALE — SHOWN ON PLAN AS — 7 / F401

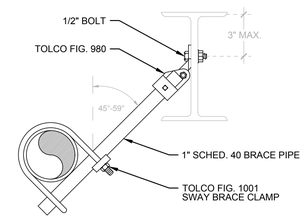

LATERAL EQB TO STEEL BEAM

NOT TO SCALE — SHOWN ON PLAN AS — 6 / F401

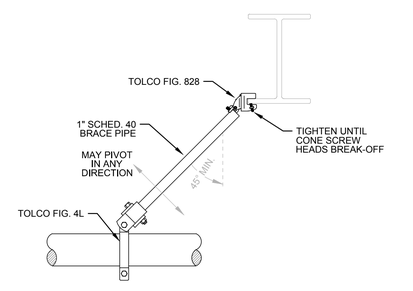

LONGITUDINAL EQB TO BEAM

NOT TO SCALE — SHOWN ON PLAN AS — 5 / F401

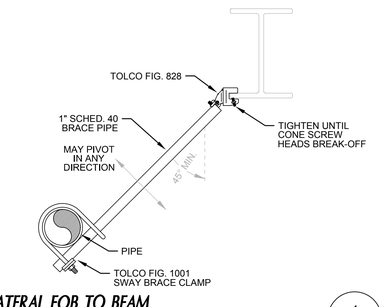

LATERAL EQB TO BEAM

NOT TO SCALE — SHOWN ON PLAN AS — 4 / F401

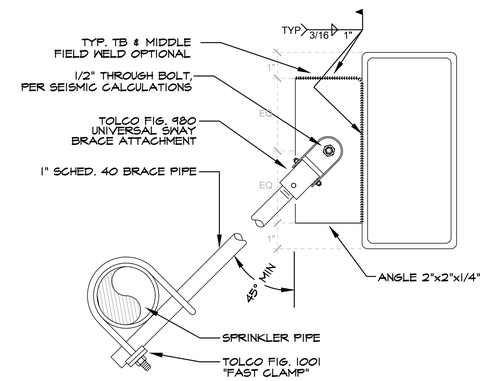

LATERAL EQB TO HSS TUBE STEEL

NOT TO SCALE — SHOWN ON PLAN AS — 3 / F401

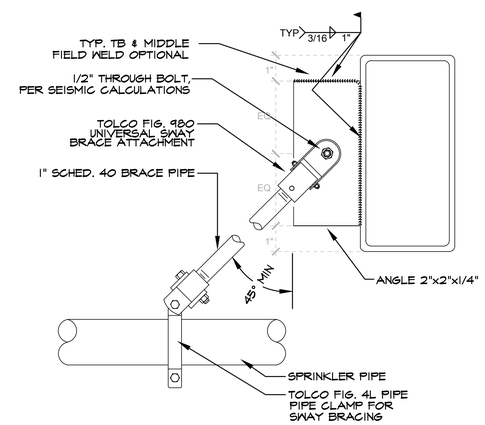

LONGITUDINAL EQB TO HSS TUBE STEEL

NOT TO SCALE — SHOWN ON PLAN AS — 2 / F401

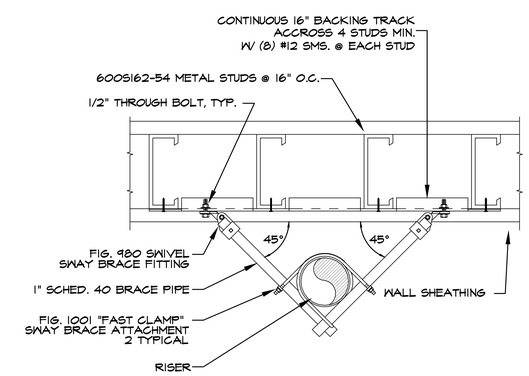

4-WAY EQB BRACE

NO SCALE — SHOWN ON PLAN AS — 1 / F401

ARCHITECT
westbergwhite architecture
1775 HANCOCK ST. SUITE 120
SAN DIEGO, CA 92110
619.542.1188 619.542.1663 FAX
LICENSED ARCHITECT FRASCO WHITE C-9090 EXP. 10-2025 STATE OF CALIFORNIA

CONSULTANT
PROTECTION DESIGN AND CONSULTING
2851 Camino Del Rio S. # 210
San Diego, California 92108
www.protectiondesign.com
phone 619.255.8964
fax 619.255.9547
REGISTERED PROFESSIONAL ENGINEER JONATHAN S. MITCHELL FP 1559 Exp 06/26 FIRE PROTECTION STATE OF CALIFORNIA

City of La Puente
15900 E. MAIN ST. LA PUENTE, CA. 91744

FIRE PROTECTION DETAILS

La Puente ACTIVITY CENTER
501 GLENDORA AVE. LA PUENTE, CA. 91744

PROJECT NO.: 22008
R.S. A.P.
FILE NAME
DATE: 12/05/2025 DRAWN CHECKED
REVISIONS
SHEET NO. F401

CITY APPROVAL

POINT OF CONNECTION:

SOURCE: EXISTING 4" IRRIGATION MAINLINE IN THIS LOCATION. (SEE POINT OF CONNECTION NOTES THIS SHEET)
TO BE INSTALLED DOWN STREAM OF P.O.C:
- 2" MASTER CONTROL VALVE
- 1 1/2" IRRIGATION FLOW METER
- 2" BALL VALVE

POINT OF CONNECTION "A" NOTES:

1. THE WATER SOURCE FOR THIS IRRIGATION SYSTEM IS TO BE THE EXISTING IRRIGATION 4" MAINLINE
2. CONTRACTOR TO CONFIRM PRECISE LOCATION OF EXISTING 4" IRRIGATION WATER MAIN AND IRRIGATION CONTROL WIRES, PRIOR TO BEGINNING OF WORK.
3. CONTRACTOR TO PROVIDE COMMUNICATION WIRES FOR THE PROPOSED IRRIGATION FLOW SENSOR AND MASTER VALVE TO EXISTING IRRIGATION HUNTER ICC CONTROLLER LOCATED IN TRASH ENCLOSURE SOUTH EAST OF SITE
4. MINIMUM P.O.C. REQUIRED PSI: 60 (CONTRACTOR TO VERIFY)

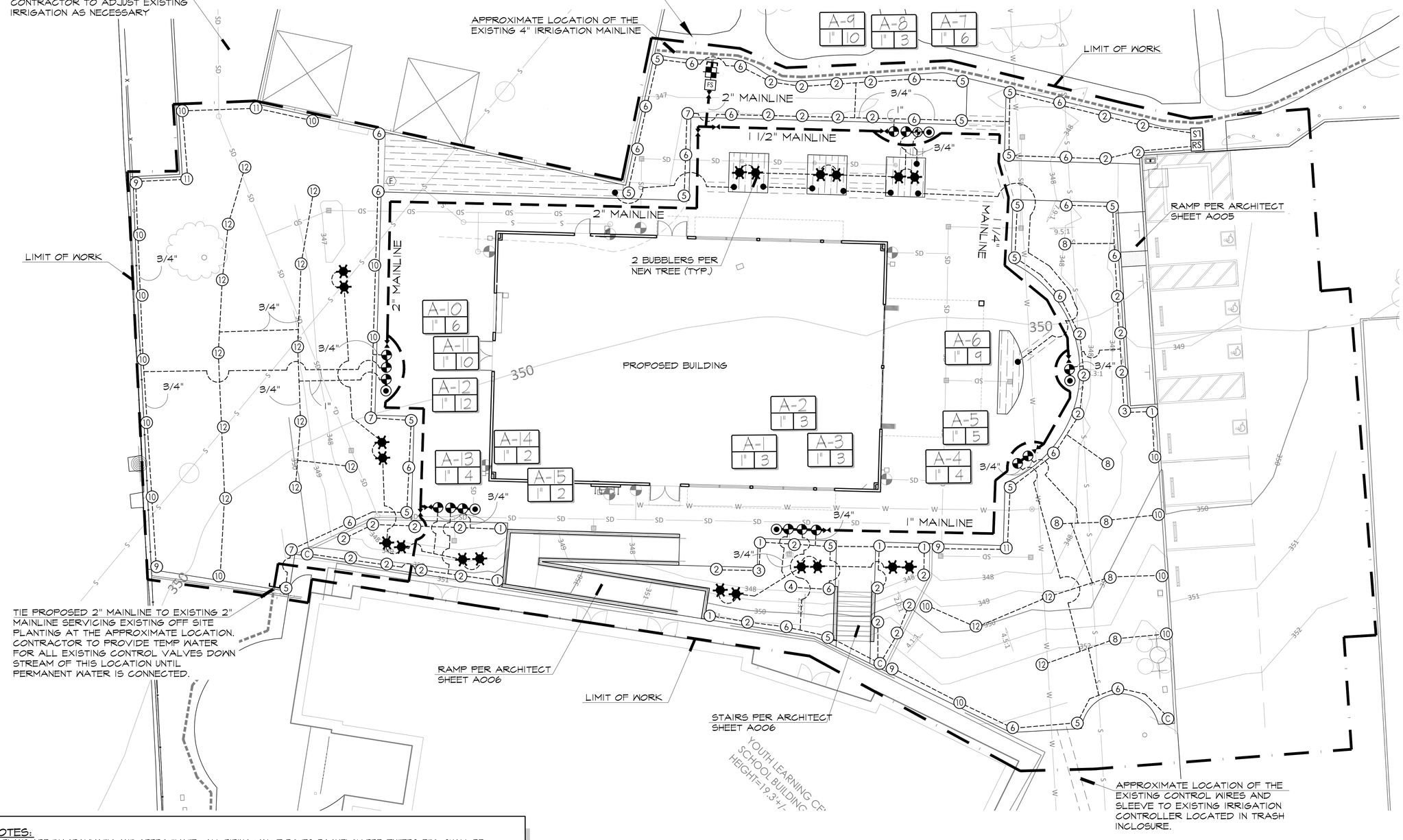

NOTES:

1. PLANS ARE DIAGRAMMATIC AND APPROXIMATE. ALL PIPING, VALVE BOXES, BACKFLOW PREVENTERS, ETC., SHALL BE LOCATED IN LANDSCAPE AREAS. NO IRRIGATION EQUIPMENT SHALL BE LOCATED IN, OR UNDER THE HARDSCAPE UNLESS WITHIN A SLEEVE. GROUP VALVE BOXES AND LOCATE IN SHRUB AREAS WHENEVER POSSIBLE.
2. ALL END-RUNS SHALL BE 3/4" PVC SCH 40 PIPE UNLESS STATED OTHERWISE.
3. CONTRACTOR TO COORDINATE PRECISE IRRIGATION CONTROLLER LOCATION WITH LANDSCAPE ARCHITECT, CITY ENGINEER OR HIS REPRESENTATIVE.
4. CONTRACTOR TO VERIFY DEPTH & LOCATION OF EXISTING WATER, SEWER & ANY OTHER UTILITY LINES THAT MAY BE ON SITE PRIOR TO TRENCHING OR INSTALLING IRRIGATION.
5. CONTRACTOR TO OBTAIN FIELD VERIFICATION FROM PROJECT ENGINEER FOR VALVE BOXES LOCATION.
6. CONTRACTOR TO OBTAIN FIELD VERIFICATION FROM PROJECT ENGINEER, OF ALL TREE LOCATIONS , PRIOR TO INSTALLATION OF BUBBLERS
7. ANTI-DRAIN VALVES SHALL BE INSTALLED AS REQUIRED TO PREVENT ALL LOW HEAD DRAINAGE.
8. CONTRACTOR TO INSURE ALL OVERHEAD IRRIGATION BE A MINIMUM OF 18" AWAY FROM ANY IMPERVIOUS SURFACE AND ALL PLANTING WITHIN 18" OF IMPERVIOUS SURFACES BE IRRIGATIED WITH SUBSURFACE IRRIGATION.
9. CONTRACTOR TO BRAND VALVE BOX LIDS WITH TO MATCH VALVE NUMBERS.

CONTROLLER NOTES:

1. CONTRACTOR TO CONFIRM PRECISE LOCATION AND VIABILITY OF EXISTING HUNTER ICC CONTROLLER LOCATED IN TRASH ENCLOSURE APPROXIMATELY 135' SOUTHEAST OF THE SITE.
2. CONTRACTOR TO TIE PROPOSED IRRIGATION CONTROLLERS TO EXISTING BUNDLE OF CONTROL WIRE LOCATED IN A SLEEVE PER THE PLAN.
3. CONTRACTOR TO UTILIZE EXISTING SLEEVE TO RUN PROPOSED IRRIGATION MASTER CONTROL VALVE AND FLOW SENSOR TO THE EXISTING IRRIGATION CONTROLLER.

ARCHITECT
westbergwhite architecture
1775 HANCOCK ST, SUITE 120
SAN DIEGO, CA 92110
619.542.1188 619.542.1663 FAX
LICENSED ARCHITECT FRISCO WHITE C-9090 EXP. 10-2025 STATE OF CALIFORNIA

CONSULTANT
ADL PLANNING ASSOCIATES
LAND PLANNING LANDSCAPE ARCHITECTURE
2195 BASSWOOD AVE. CARLSBAD CA 92008
(760) 729-8637
REGISTERED LANDSCAPE ARCHITECT WILLIAM D. LAWSON 12/01/22 CALIFORNIA

City of La Puente
15900 E. MAIN ST. LA PUENTE, CA. 91744

IRRIGATION PLANS

La Puente ACTIVITY CENTER

501 GLENDORA AVE. LA PUENTE, CA. 91744

PROJECT NO.: 22008
R.S. A.P.
FILE NAME
DATE: 12/05/2025 DRAWN CHECKED
REVISIONS
SHEET NO. L-1
OF SHEETS

CITY APPROVAL

S:\PROJECTS\2251 La Puente Activity Center\4.0 CDs\Irrigation Plans_recover.dwg Sep 24, 2025 - 5:53pm colto

IRRIGATION EQUIPMENT LEGEND:

SYMBOL	DESCRIPTION	MANUFACTURER	MODEL NUMBER/ NOTES	NOTES
	BRASS MASTER CONTROL VALVE	HUNTER	IBV-101G-FS	DETAIL A, SHEET L-3
FS	PVC FLOW SENSOR. INSTALL PER MANUFACTURER'S RECOMMENDATIONS.	GRISWOLD	2030 SIZE PER PLAN	DETAIL B, SHEET L-3
	BALL VALVE, LINE SIZE	SPEARS MFG.	8722	DETAIL E, SHEET L-3
	QUICK COUPLER VALVE, INSTALLED IN 6" ROUND VALVE BOX	HUNTER	H044-LRC	DETAIL F, SHEET L-3
	REMOTE CONTROL VALVE - SIZE PER PLANS	HUNTER	ICV-XXX6-FS	DETAIL D, SHEET L-3
	DRIP SERIES REMOTE CONTROL VALVE. - SIZE PER PLANS	HUNTER	ICZ-1XX	DETAIL C, SHEET L-3
	PVC PIPE AS SLEEVING.	PACIFIC PLASTICS	SCH. 80 UNDER VEHICLE PAVING SCH. 40 UNDER PEDESTRIAN PAVING	DETAIL J, SHEET L-3
--------	PVC LATERAL PIPE	PACIFIC PLASTICS	PVC CLASS 315 (2" & GREATER) SCH. 40 (1-1/2" & SMALLER)	DETAIL I, SHEET L-3
—— ——	PVC WATER MAINLINES.	PACIFIC PLASTICS	PVC CLASS 315 (2" & GREATER) SCH. 40 (1-1/2" & SMALLER)	DETAIL I, SHEET L-3
NO SYMBOL	VALVE BOXES.	RAINBIRD	7" ROUND VB - VBTRND STD VB - VBSTDDH JUMBO VB - VBJMBH	--
	DRIP TUBING W/ .6 GPH EMITTERS 12" ON CENTER. TUBING ROWS SHALL BE INSTALLED A MAXIMUM OF 16" APART IN PLANTING AREAS.	HUNTER	HDL-06-12-CV	DETAIL M, SHEET L-3
F	END CAP OF DRIP DISCHARGE HEADER	HUNTER / PLD-BV	INSTALL FLUSH VALVE INSIDE A SEPARATE VALVE BOX	DETAIL N, SHEET L-3
A	AIR / VACUUM RELIEF VALVE	HUNTER / PLD-AVR	INSTALL IN VISIBLE AREA OF PLANTING BED	DETAIL O, SHEET L-3
E	OPERATING INDICATOR SET	HUNTER / ECO-ID	INSTALL IN VISIBLE AREA OF PLANTING BED	DETAIL N, SHEET L-3

IRRIGATION HEAD LEGEND:

SYMBOL	DESCRIPTION	MAKE / MODEL	ARC	PSI	RAD.	DISCHARGE (GPM)	SPAC.	DETAIL
1 2 3 4	MP ROTATOR	SPRAY HEAD: HUNTER / MP800-(90, 180, 270, 360) POP-UP BODY: PROS-00-PRS-30	VARIES	30	6'-8'	.17, .33, .5, .66	8'	DETAIL G/H
5 6 7 8	MP ROTATOR	SPRAY HEAD: HUNTER / MP800-(90, 180, 270, 360) POP-UP BODY: PROS-00-PRS-40	VARIES	40	8'-12'	.19, .37, .57, .75	10'	DETAIL G/H
9 10 11 12	MP ROTATOR	SPRAY HEAD: HUNTER / MP1000-(90, 180, 270, 360) POP-UP BODY: PROS-00-PRS-40	VARIES	40	10'-15'	.23, .42, .57, .78	12'	DETAIL G/H
13 14 15 16	MP ROTATOR	SPRAY HEAD: HUNTER / MP2000-(90, 180, 270, 360) POP-UP BODY: PROS-00-PRS-40	VARIES	40	15'-21'	.4, .74, 1.10, 1.47	20'	DETAIL G/H
17 18 19 20	MP ROTATOR	SPRAY HEAD: HUNTER / MP3000-(90, 180, 270, 360) POP-UP BODY: 570Z-12P-PROS-00-PRS-40	VARIES	40	22'-30'	.86, 1.82, 2.73, 3.64	30'	DETAIL G/H
C	MP ROTATOR CORNER	SPRAY HEAD: HUNTER / MPCORNER POP-UP BODY: PROS-00-PRS-40	VARIES	40	8'-15'	0.45	12'	DETAIL G/H
SS	MP ROTATOR STRIP	SPRAY HEAD: HUNTER / MPLCS515-(SIDE STRIP) POP-UP BODY: PROS-00-PRS-40	STRIP	40	5'X15'	0.44	15'	DETAIL G/H
LS	MP ROTATOR STRIP	SPRAY HEAD: HUNTER / MPLCS515-(LEFT STRIP) POP-UP BODY: PROS-00-PRS-40	STRIP	40	5'X15'	0.22	15'	DETAIL G/H
RS	MP ROTATOR STRIP	SPRAY HEAD: HUNTER / MPRCS515-(RIGHT STRIP) POP-UP BODY: PROS-00-PRS-40	STRIP	40	5'X15'	0.22	15'	DETAIL G/H
	TREE BUBBLER (2 PER TREE)	RAINBIRD / 1402 - BUBBLER NOZZLE (0.50 GPM)	TRICKLE	40	2'-4'	0.5 (1.0)	2'-4'	DETAIL K

NOTES:
ALL SHRUB HEADS INSTALLED FARTHER THAN TEN (10) FEET FROM PAVING, CURBS, SIDEWALKS, STEPS, TURF BOUNDARIES OR OTHER PEDESTRIAN AREAS MAY BE INSTALLED ON RISER WITH HUNTER PROS-00-PRS-XX, WITH IN LINE CHECK VALVE, AND WITH NOZZLE AS PER PLAN

ALL SPRAY AND ROTOR HEADS INSTALLED ON RECYCLED WATER SYSTEMS SHALL HAVE A FACTORY INSTALLED PURPLE RECLAIMED WATER COVER.

INSTALL ALL HEADS IN TURF AREA ON 6" POP-UPS.

IRRIGATION NOTES:

1. ALL IRRIGATION SYSTEM COMPONENTS SHALL BE INSTALLED AS PER LOCAL CODE. CONTRACTORS SHALL SECURE ALL NECESSARY PERMITS.
2. CHECK AND VERIFY ALL SITE CONDITIONS, UTILITIES AND SERVICES PRIOR TO TRENCHING. IF DURING CONSTRUCTION IT IS FOUND THAT THE SITE VARIES FROM THE DRAWINGS, NOTIFY THE LANDSCAPE ARCHITECT, CITY ENGINEER OR HIS REPRESENTATIVE BEFORE PROCEEDING WITH WORK.
3. PLANS ARE DIAGRAMMATIC AND APPROXIMATE. ALL PIPING SHALL BE INSTALLED IN PLANTING AREAS EXCEPT WHERE IT IS INFEASIBLE.
4. PVC PIPE CEMENT , IPS WELD-ON PVC 721 BLUE MEDIUM-BODIED, SHOULD BE USED WITH 1/2" TO 1-1/2" PVC PIPES.
5. PVC PIPE CEMENT, IPS WELD-ON PVC 711 GREY HEAVY-BODIED, SHOULD BE USED WITH 2" AND LARGER PVC PIPES, AND ALL MAIN LINES.
6. PVC PIPE PRIMER, IPS WELD-ON P-70 PRIMER PURPLE, SHOULD BE USED WITH ALL PVC CONNECTIONS.
7. ALL VALVES ARE TO BE LABELED WITH CHRISTY'S VALVE IDENTIFICATION TAGS, IDENTIFYING STATION # AND APPROPRIATE CONTROLLER IDENTIFICATION INFORMATION.
8. CONTRACTOR SHALL FLUSH ALL MAINLINES PRIOR TO INSTALLATION OF VALVES AND ALL LATERAL LINES PRIOR TO INSTALLATION OF HEADS.
9. WHERE POSSIBLE, ALL PIPING, PVC ELECTRICAL SLEEVES, ETC., UNDER PAVING SHALL BE INSTALLED PRIOR TO PAVING WORK. NO TEES, ELLS, OR OTHER TURNS IN PIPING SHALL BE LOCATED UNDER PAVING.
10. UNDERGROUND MARKING TAPE SHALL BE RUN WITH ALL MAIN LINES AND MUST BE INSTALLED AT LEAST 6" ABOVE TOP OF PIPE.
11. COORDINATE IRRIGATION WORK WITH PLANTING PLANS TO AVOID CONFLICTING LOCATIONS BETWEEN PIPING AND PLANT PITS.
12. QUICK COUPLERS ARE TO BE LOCATED IN SHRUB AREAS WHENEVER POSSIBLE AND PLACED SIX (6) INCHES FROM OUTSIDE HEADER.
13. TRACING WIRE: ONE #10 AWG, SOLID COPPER, 600 VOLT, TYPE OF WIRE CABLE MUST BE TAPED TO ALL MAIN LINES AND BE VISIBLY MARKED AND ACCESSIBLE AT ALL GATE AND/OR BALL VALVES.
14. SPEAR DRI-SPLICE SHOULD BE USED AS WIRE CONNECTORS: USE EXTRA DS300 SEALANT INSIDE CONNECTORS.
15. EACH WIRE SHALL BE INSTALLED WITH A 30" COILED EXCESS WIRE LENGTH AT WIRE END/VALVE.
16. CONTRACTOR TO INCLUDE TWO, (2), ADDITIONAL CONTROL WIRES WITHIN EACH END-RUN, FOR FUTURE USE AND/OR CONTINGENCY.
17. LANDSCAPE IRRIGATION SHALL BE APPLIED AT A RATE NOT EXCEEDING THE INFILTRATION RATE OF THE SOIL (MINIMIZING EROSION AND WATER WASTE) BUT SUFFICIENTLY TO ALLOW FOR HEALTHY PLANT GROWTH.
18. INSTALL CHECK VALVES AS NEEDED TO PREVENT LOW HEAD DRAINAGE.
19. SPECIAL CONSIDERATION SHALL BE GIVEN TO WATER AND ELECTRICAL SERVICES.
20. IRRIGATION AND PLANTING SHALL TAKE PLACE AS IMPROVEMENTS PROGRESS.
21. ALL IRRIGATION PIPE UNDER PAVING/HARDSCAPE TO BE INSTALLED IN SLEEVE.
22. INSTALLATION DEPTH OF PIPING:
    - PVC PRESSURE MAINLINE: 18" MIN.
    - PVC NON PRESSURE LATERAL: 12" MIN.
    - PVC SLEEVE: 24" MIN.
    - POLYPROPELENE TUBING: 4" MIN.

ARCHITECT
westbergwhite architecture
1775 HANCOCK ST, SUITE 120
SAN DIEGO, CA 92110
619.542.1188 619.542.1663 FAX

LICENSED ARCHITECT FRISCO WHITE C-9090 EXP. 10-2025 STATE OF CALIFORNIA

CONSULTANT
ADL PLANNING ASSOCIATES
LAND PLANNING
LANDSCAPE ARCHITECTURE
2195 BASSWOOD AVE. CARLSBAD CA 92008
(760) 729-8637

REGISTERED LANDSCAPE ARCHITECT WILLIAM D. LAWSON 2549 12/31/27 CALIFORNIA

City of La Puente
15900 E. MAIN ST. LA PUENTE, CA. 91744

IRRIGATION LEGEND & NOTES

La Puente ACTIVITY CENTER
501 GLENDORA AVE. LA PUENTE, CA. 91744

PROJECT NO.: 22008
R.S. A.P.
FILE NAME
DATE: 12/05/2025 DRAWN CHECKED
REVISIONS
SHEET NO. L-2
OF SHEETS

CITY APPROVAL

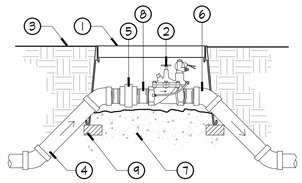

LEGEND

1. RECTANGULAR PLASTIC VALVE BOX WITH LOCKING BOLT LID
2. ELECTRIC REMOTE CONTROL VALVE
3. FINISH GRADE
4. PRESSURE SUPPLY LINE
5. UNION
6. PVC SCH. 40 45 DEGREE FITTING, FOUR (4) REQUIRED
7. ¾" CRUSHED ROCK SUMP
8. SCH. 80 NIPPLE (TYP)
9. 4" WIDE BRICK SUPPORT, ONE PLACED AT EACH CORNER

NOTE:
VALVE SHALL HAVE A MINIMUM OF 4" CLEARANCE FROM THE BOTTOM OF THE VALVE BOX LID, AND 2" MINIMUM CLEARANCE FROM THE BOTTOM OF VALVE AND TOP OF GRAVEL SUMP.

Ⓐ MASTER CONTROL VALVE

SCALE: N.T.S.

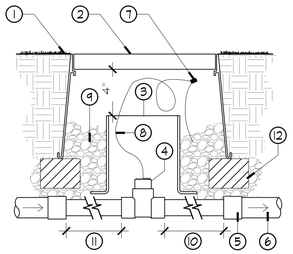

LEGEND

1. FINISH GRADE
2. RECTANGULAR VALVE BOX (TOP OF LID TO BE ENGRAVED)
3. 8" DIA. CL 160 PVC SLEEVE BOTTOM TO BE FLARED AND CONTACT TOP OF PRESSURE SUPPLY LINE
4. FLOW SENSOR, REFER TO LEGEND FOR MODEL AND SIZE
5. PVC REDUCING COUPLER (2) REQUIRED
6. PVC MAINLINE
7. WATERPROOF CONNECTIONS WITHIN ELECTRICAL CONDUIT RELAYED BACK TO THE MASTER CONTROLLER
8. CONTROL WIRE WITH 30" EXPANSION COIL
9. ¾" GRAVEL SUMP (ONE CUBIT FOOT)
10. 5X PIPE DIA. MIN. DOWNSTREAM
11. 10X PIPE DIA. MIN. UPSTREAM
12. BRICK SUPPORT

Ⓑ FLOW SENSOR

SCALE: N.T.S.

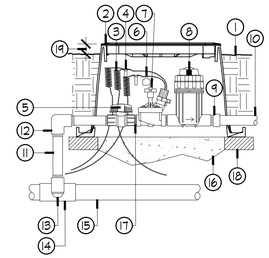

LEGEND

1. FINISH GRADE
2. VALVE BOX WITH COVER
3. 30-INCH LINEAR LENGTH OF WIRE, COILED
4. WATERPROOF CONNECTION
5. 1-INCH BALL VALVE
6. ID TAG
7. REMOTE CONTROL VALVE
8. PRESSURE REGULATING QUICK CHECK BASKET FILTER
9. PVC SCH 40 FEMALE ADAPTOR
10. LATERAL PIPE
11. PVC SCH 80 NIPPLE (LENGTH AS REQUIRED)
12. PVC SCH 40 ELL
13. PVC SCH 80 NIPPLE (2-INCH LENGTH, HIDDEN) AND PVC SCH 40 ELL
14. PVC SCH 40 TEE OR ELL
15. MAINLINE PIPE
16. PEA GRAVEL, 3" MIN. DEPTH
17. PVC SCH 80 NIPPLE, CLOSE
18. BRICK SUPPORT
19. 3" IN TURF & GROUNDCOVER AREAS

Ⓒ DRIPLINE VALVE KIT

N.T.S.

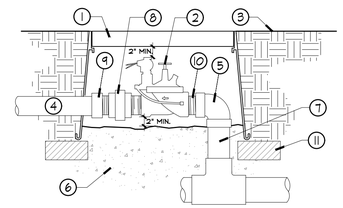

LEGEND

1. PLASTIC VALVE BOX W/ LOCKING LID
2. REMOTE CONTROL VALVE
3. FINISH GRADE
4. PVC LATERAL LINE
5. PVC SCH. 40 ELL
6. 3/4" CRUSHED ROCK SUMP
7. PRESSURE SUPPLY LINE
8. SCH. 80 PVC MALE ADAPTER
9. SCH. 80 NIPPLE
10. 4" WIDE BRICK SUPPORT ONE PLACE AT EACH CORNER

Ⓓ REMOTE CONTROL VALVE

SCALE: N.T.S.

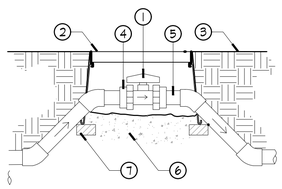

LEGEND

1. BLOCKED TRUE UNION BALL VALVE
2. PURPLE PLASTIC VALVE BOX W/ LOCKING LID.
3. FINISH GRADE
4. SLIP END CONNECTORS SUPPLIED WITH VALVE
5. PVC MAINLINE - SEE IRRIGATION SPECS. FOR PIPE DEPTH
6. PEA GRAVEL, 2" DEPTH
7. 4" WIDE BRICK SUPPORT, ONE PLACED AT EACH CORNER

NOTE:
VALVE SHALL HAVE A MINIMUM OF 4" CLEARANCE FROM THE BOTTOM OF THE VALVE BOX LID, AND 2" MINIMUM CLEARANCE FROM THE BOTTOM OF VALVE AND TOP OF GRAVEL SUMP.

Ⓔ BALL VALVE

SCALE: N.T.S.

LEGEND

1. VALVE BOX WITH PURPLE LID
2. FINISH GRADE
3. QUICK COUPLING VALVE W/ PURPLE LOCKING CAP AND ACME THREADS
4. PVC MAINLINE PIPE
5. PVC SCHEDULE 40 STREET ELL (3 REQUIRED)
6. PVC SCH 40 ELL OR TEE
7. PVC SCH. 80 NIPPLE (LENGTH AS REQUIRED)
8. 3 INCH MINIMUM 3/4" CRUSHED ROCK
9. PVC SCH. 80 NIPPLE (LENGTH AS REQUIRED)
10. 36" MIN. LENGTH #4 REBAR STABILIZER ATTACH WITH TWO STAINLESS STEEL BANDS
11. BRICK (2 REQUIRED)

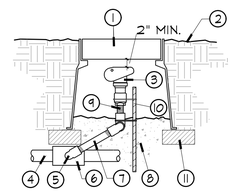

NOTE:
QUICK COUPLER VALVES SHALL BE OF THE TYPE APPROVED FOR RECYCLED WATER USE.

Ⓕ QUICK COUPLER VALVE

SCALE: N.T.S.

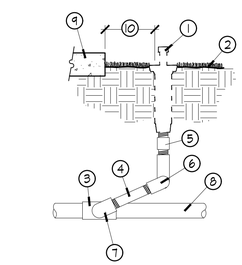

LEGEND

1. PVC BLACK CAP SAWCUT TOP TO ALLOW FOR SURFACE FLOODING DO NOT CEMENT CAP TO DRAIN PIPE (SET MIN. 1" ABOVE MULCH)
2. BUBBLER HEAD
3. FINISH GRADE
4. 1/2" SCH 80 PVC NIPPLE
5. 6" PERFORATED PVC DRAIN PIPE, FILL WITH 3/8 IN. CRUSHED GRAVEL. INSTALL ON UPHILL SIDE OF TRUNK ON SLOPES WITHIN WATERING BERM.
6. PVC LATERAL PIPE
7. 3" LAYER OF MULCH

Ⓖ 8' POP-UP SPRAY (TURF)

N.T.S.

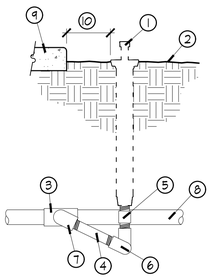

LEGEND

1. FINISH GRADE
2. FLUSH CAP FOR EASY FIT COMPRESSION FITTINGS: POTABLE:RAIN BIRD MDCFCAP
3. EASY FIT COUPLING: RAIN BIRD MDCFCOUP
4. SUBTERRANEAN EMITTER BOX:
5. SUB-SURFACE DRIPLINE:
6. 3-INCH MINIMUM DEPTH OF 3/4-INCH WASHED GRAVEL
7. BRICK (1 OF 2)

NOTE:
1. ALLOW A MINIMUM OF 6-INCHES OF DRIPLINE TUBING IN VALVE BOX IN ORDER TO DIRECT FLUSHED WATER OUTSIDE VALVE BOX.

Ⓝ FLUSH VALVE AND CAP

N.T.S.

LEGEND

1. POP-UP SPRAY HEAD
2. FINISH GRADE
3. PVC FITTINGS
4. SCH. 80 PVC NIPPLE
5. CHECK VALVE IF REQUIRED
6. 90° ELL
7. STREET ELL
8. PVC SUPPLY LINE
9. WALK, CURB, HEADER, ETC.
10. VARIES - ALLOW 12" FROM ANY VERTICAL SURFACES AND 24" IMPERMEABLE SURFACES.

NOTE:
SWING JOINT NIPPLES AND ELLS ARE TO BE THE SAME SIZE AS THE INLET AT HEAD.

Ⓗ 12' POP-UP SPRAY (SHRUBS)

N.T.S.

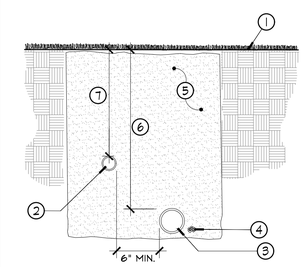

LEGEND

1. FINISH GRADE
2. LATERAL LINE
3. PRESSURE SUPPLY LINE
4. CONTROL WIRES
5. BACKFILL
6. FOR PIPE DEPTHS SEE IRRIGATION NOTE 20 ON SHEET L-3.

*INSTALL CONTROL WIRES ON THE UNDERSIDE OF PRESSURE SUPPLY LINE.

Ⓘ IRRIGATION TRENCHING

SCALE: N.T.S.

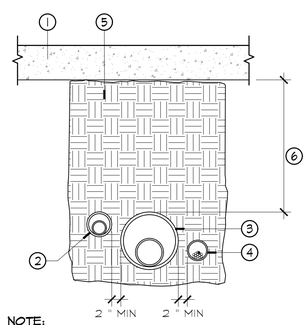

LEGEND

1. PAVING
2. LATERAL LINE (IN SLEEVE)
3. PRESSURE SUPPLY LINE (IN SLEEVE)
4. CONTROL WIRES (IN CONDUIT)
5. BACKFILL
6. FOR PIPE DEPTHS SEE IRRIGATION NOTE 20 ON SHEET L-3.

NOTE:
1. ALL SLEEVES TO BE TWICE DIAMETER OF PIPE (PER SPECIFICATIONS).
2. NO IRRIGATION SLEEVING IS PERMITTED PERPENDICULAR AND OVER CONCRETE BROW DITCHES.

Ⓙ IRRIGATION SLEAVING

SCALE: N.T.S.

LEGEND

1. WALK, CURB, HEADER, ETC.
2. FINISH GRADE
3. POP-UP INDICATOR, SHALL BE PLACE ON A VISIBLE AREA
4. 1/2"X8" SCH. 80 PVC NIPPLE WITH THREE STREET ELLS
5. PVC FITTING AS NEEDED
6. PVC DRIP LATERAL SUPPLY LINE

Ⓚ SUBSURFACE TREE BUBLER

N.T.S.

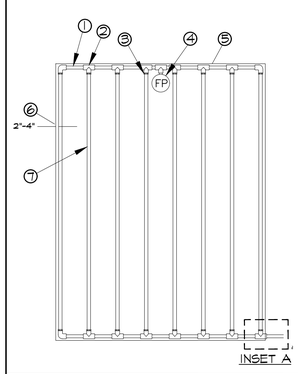

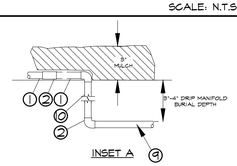

NOTES:
1. DRIP LINE TO BE BURIED UNDER 3 TO 4 INCHES OF MULCH.
2. LENGTH OF LONGEST DRIPLINE LATERAL SHOULD NOT EXCEED THE MAXIMUM SPACING SHOWN IN THE ACCOMPANYING TABLE.
3. WHEN USING 17MM INSERT FITTINGS WITH DESIGN PRESSURE OVER 50PSI, IT IS RECOMMENDED THAT STAINLESS STEEL CLAMPS BE INSTALLED ON EACH FITTING.

1. PVC EXHAUST HEADER
2. PVC SCH 40 TEE OR EL (TYPICAL)
3. BARB X MALE FITTING (TYPICAL)
4. FLUSH POINT (TYPICAL).
5. PERIMETER OF AREA
6. PERIMETER DRIPLINE PIPE TO BE INSTALLED 2"-4" FROM EDGE OF PLANTER
7. DRIPLINE:
8. PVC SUPPLY HEADER
9. PVC DRIP MANIFOLD FROM CONTROL ZONE VALVE KIT (SIZED TO MEET LATERAL FLOW DEMAND)
10. PVC SCH 40 RISER PIPE

Dripline Maximum Lateral Lengths (Feet)				
Inlet Pressure psi	12" Spacing		18" Spacing	
	Nominal Flow (gph)		Nominal Flow (gph)	
	0.6	0.9	0.6	0.9
20	192	136	254	215
30	289	205	402	337
40	350	248	498	416
50	397	281	573	477
60	436	309	637	529

Ⓜ DRIP IRRIGATION

N.T.S.

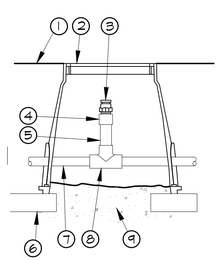

LEGEND

1. FINISH GRADE
2. PLASTIC VALVE BOX W/ LOCKING LID
3. ½" AIR RELIEF VALVE: TO BE INSTALLED AT HIGH POINTS IN DRIP ZONE
4. PVC SCH 40 FEMALE ADAPTER
5. PVC SCH 80 RISER
6. BRICK (1 OF 2)
7. PVC HEADER PIPE
8. PVC SCH 40 TEE
9. 3" MINIMUM DEPTH OF ¾" WASHED GRAVEL

NOTE:
1. AIR RELIEF VALVE MUST BE LOCATED AT HIGHEST ELEVATION(S) OF CIRCUIT.
2. PROVIDE AS NEEDED AND AS PER MANUFACTURER'S RECOMMENDATIONS.

Ⓞ AIR RELIEF VALVE

N.T.S.

ARCHITECT

westbergwhite architecture
1775 HANCOCK ST, SUITE 120
SAN DIEGO, CA 92110
619.542.1188 619.542.1663 FAX

LICENSED ARCHITECT FRISCO WHITE C-8090 EXP. 10-2025 STATE OF CALIFORNIA

CONSULTANT

ADL PLANNING ASSOCIATES
LAND PLANNING
LANDSCAPE ARCHITECTURE
2195 BASSWOOD AVE. CARLSBAD CA 92008
(760) 729-8637

REGISTERED LANDSCAPE ARCHITECT WILLIAM D. LAWSON 2548 12/31/27 CALIFORNIA

City of La Puente
15900 E. MAIN ST. LA PUENTE, CA. 91744

IRRIGATION DETAILS

La Puente ACTIVITY CENTER
501 GLENDORA AVE. LA PUENTE, CA. 91744

PROJECT NO.: 22008
R.S. A.P.
FILE NAME
DATE: 12/05/2025 DRAWN
CHECKED
REVISIONS
SHEET NO. L-3
OF SHEETS

CITY APPROVAL

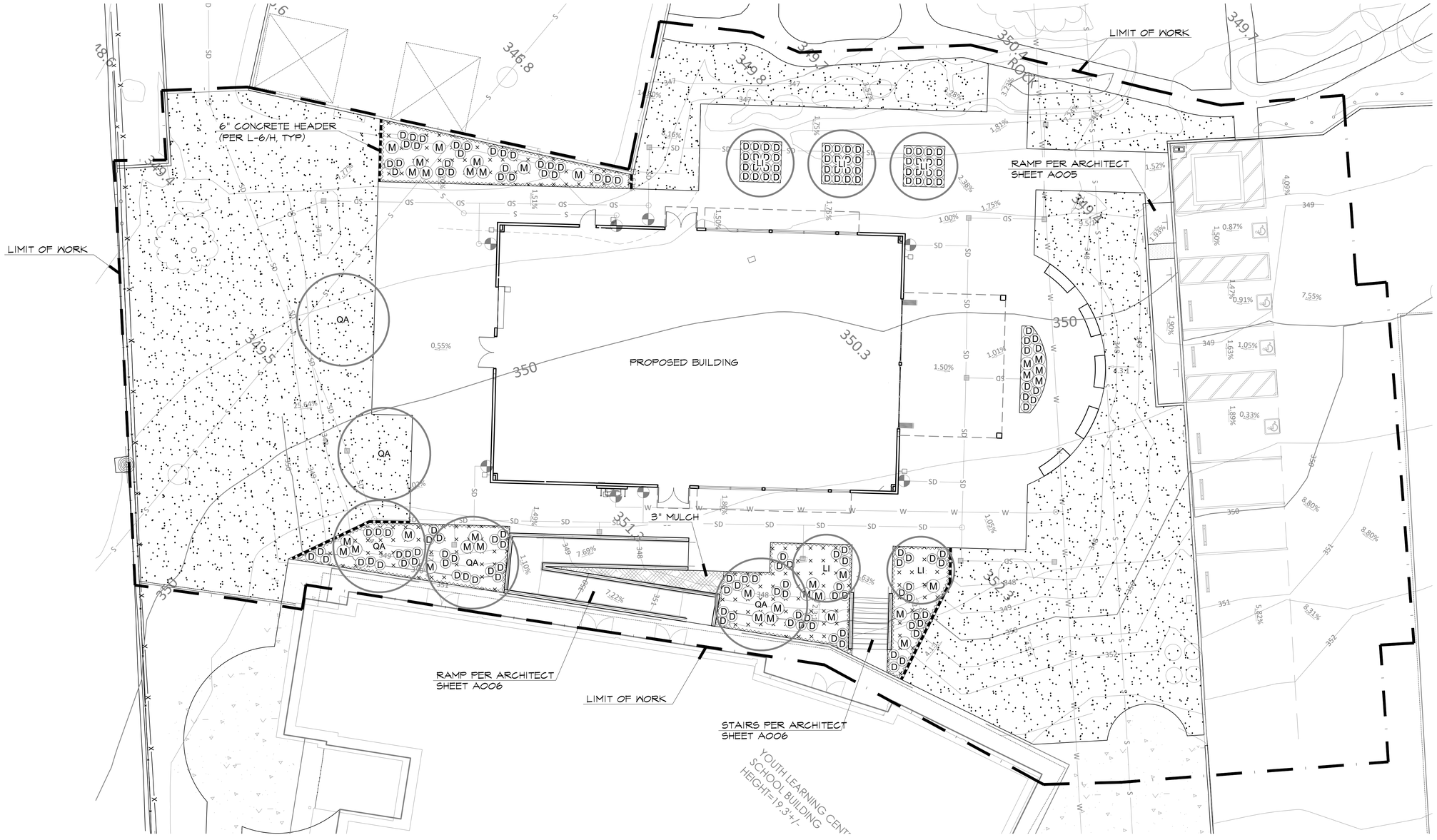

ARCHITECT

westbergwhite
architecture
1775 HANCOCK ST, SUITE 120
SAN DIEGO, CA 92110
619.542.1188 619.542.1663 FAX

LICENSED ARCHITECT
FRISCO WHITE
C-9090
EXP. 10-2025
STATE OF CALIFORNIA

CONSULTANT

ADL PLANNING ASSOCIATES
LAND PLANNING
LANDSCAPE ARCHITECTURE
2195 BASSWOOD AVE. CARLSBAD CA 92008
(760) 729-8637

REGISTERED LANDSCAPE ARCHITECT
WILLIAM D. LAWSON
12/01/22
CALIFORNIA

City of La Puente

15900 E. MAIN ST. LA PUENTE, CA. 91744

PLANTING PLAN

La Puente ACTIVITY CENTER

501 GLENDORA AVE. LA PUENTE, CA. 91744

PROJECT NO.: 22008

R.S. A.P.

FILE NAME

DATE: 12/05/2025 DRAWN CHECKED

REVISIONS

SHEET NO. L-4 OF SHEETS

CITY APPROVAL

S:\PROJECTS\2251 La Puente Activity Center\4.0 CDs\Planting Plans_rescover.dwg Sep 29, 2025 - 5:44pm colto

PLANTING NOTES:

1. THE PLANTING PLAN IS DIAGRAMMATIC AND SHALL BE USED AS A GUIDE FOR SETTING OUT PLANTS. PRIOR TO PLANTING, THE CITY REPRESENTATIVE SHALL BE CONTACTED TO APPROVE ALL PLANT LOCATIONS AND DIRECT ADJUSTMENTS.

2. PLANT MATERIALS SHALL CONFORM TO NURSERYMAN'S STANDARDS FOR SIZE AND HEALTH. ALL PLANTS ARE SUBJECT TO REJECTION BY THE CITY REPRESENTATIVE IN SUBSTANDARD IN SIZE, QUALITY, OR HEALTH.

3. PROVIDE WATERPROOF SPECIES IDENTIFICATION TAGS ON ONE PLANT PER SPECIES PER GROUPING.

4. PLANT COUNTS ARE FOR THE CONVENIENCE OF THE LANDSCAPE CONTRACTOR ONLY. CONTRACTOR IS RESPONSIBLE FOR ALL PLANTS SHOWN ON THE PLAN.

5. IRRIGATION SYSTEM SHALL BE FULLY OPERATIONAL AND ALL PLANTING AREAS THOROUGHLY SOAKED PRIOR TO PLANTING.

6. ALL SITE DEMOLITION AREAS SHALL BE CLEARED AND GRUBBED PER THE DEMO PLAN.

7. PLANTING PITS SHALL BE TWICE THE CONTAINER WIDTH AND OF EQUAL DEPTH.
PLANTING PITS AND PLANTERS SHALL BE BACKFILLED WITH EXISTING SITE SOIL AND 1/4 (BY VOLUME) NITRIFIED TOP SOIL MIX. FERNS, AZALEAS AND ACID PLANTS SHALL RECEIVE AN ADDITIONAL 1/3 (BY VOLUME) PEAT IN BACKFILL MIX.

8. LANDSCAPE CONTRACTOR SHALL REMOVE EXISTING VEGETATION, TRASH, CLIPPINGS, ROCK AND OTHER DEBRIS IN PLANTING AREAS. RAKE AND FINE GRADE ALL PLANTING AREAS PRIOR TO COMMENCEMENT OF PLANTING OPERATIONS. EXISTING LANDSCAPING ON AND ADJACENT TO THE SITE SHALL BE PROTECTED IN PLACE AND SUPPLEMENTED OR REPLACED TO MEET THE SATISFACTION OF THE CITY ENGINEER.

9. TREES AND SHRUBS SHALL BE FERTILIZED AT THE TIME OF PLANTING WITH 21-GRAM TRI-C OR GROW-POWER OR EQUAL TABLETS TABLETS AT THE FOLLOWING RATES:
   - 2 TABLETS PER 5 GALLON AND SMALLER
   - 3 TABLETS PER 15 GALLON
   - 4 TABLETS PER 24 INCH BOX
   - 5 TABLETS PER 30 INCH BOX
   - 6 TABLETS PER 36 INCH BOX
   - 7 TABLETS PER 42 INCH BOX
   - 8 TABLETS PER 48 INCH AND LARGER BOXES

10. ALL 24" BOX TREES OR LARGER SHALL BE DOUBLE STAKED. CONTRACTOR SHALL BE RESPONSIBLE FOR TREE STABILITY DURING LENGTH OF THE GUARANTEE PERIOD.

11. VERIFY TREE PIT DRAINAGE WITH 24 HOUR WATER FILL TEST PRIOR TO PLANTING. ALL BOXED TREES NOT DRAINING ARE TO HAVE A 8" DIAMETER AUGER HOLE DRILLED THROUGH ANY HARDPAN OR COMPACTED EARTH AS REQUIRED TO PROVIDE DRAINAGE IN A 24 HOUR PERIOD.

12. ALL PLANTING AREAS EXCEPT SLOPES SHALL BE PREPARED BY APPLYING THE FOLLOWING AMENDMENTS TO THE SOIL AND TILLING INTO THE TOP 6" OF SOIL:
6 CU YDRS/1000 S.F. NITROGEN STABILIZED SAWDUST
25 LBS./1000 S.F. SOIL SULPHUR
20 LBS./1000 S.F. GRANULAR GYPSUM
25 LBS./1000 S.F. COMMERCIAL FERTILIZER 6-24-24XB
NOTE: SUBJECT TO CHANGE PER SOIL TEST RECOMMENDATIONS.

13. SOIL TEST SHALL BE PERFORMED BY A SOIL TESTING LABORATORY (PRE-APPROVED BY THE DISTRICT). THE TEST SHALL INDICATE BUT NOT BE LIMITED TO THE FOLLOWING:
   - A. ORGANIC MATTER CONTENT
   - B. N.P.K.
   - C. PH
   - D. ED
   - E. SOIL TEXTURE (SILT, CLAY, SAND)
   - F. RECOMMENDATIONS FOR AMENDMENTS, LEACHING, AND MAINTENANCE

THE RESULTS AND RECOMMENDATIONS OF THE SOIL TESTING LABORATORY SHALL BE SUBMITTED TO AND APPROVED BY THE CITY.
POST PLANTING FERTILIZATION SHALL BE PERFORMED BY CONTRACTOR AT 30, 60, AND 90 DAYS AFTER PLANTING.

14. PLANTS SHALL NOT BE PLACED WITHIN 12" OF SPRINKLER HEADS.

15. ROOT BARRIERS SHALL BE INSTALLED ADJACENT TO ALL PAVING SURFACES, WHERE A PAVING SURFACE IS LOCATED WITHIN 6 FEET OF A TREE'S TRUNK. ROOT BARRIERS SHALL EXTEND 5 FEET IN EACH DIRECTION FROM THE CENTERLINE OF THE TRUNK, FOR A TOTAL DISTANCE OF 10 FEET.
ROOT BARRIERS SHALL BE 24" IN DEPTH.

16. GROUNDCOVER SHALL BE PLANTED USING TRIANGULAR SPACING AS NOTED IN LEGEND.

17. PROVIDE A 3" LAYER OF "WALK ON BARK" FOR ALL NON-TURF AREAS LESS STEEP THAN 3:1. SUBMIT SAMPLE TO CITY REPRESENTATIVE FOR APPROVAL PRIOR TO "BULK DELIVERY" TO SITE.

18. LANDSCAPE CONTRACTOR SHALL MAINTAIN ALL PLANTINGS FOR A PERIOD OF 120 DAYS FROM DATE OF PLANTING COMPLETION. ALL AREAS SHALL BE KEPT CLEAN, WATERED, AND WEED-FREE. ALL DEAD OR DYING PLANTS SHALL BE REPLACED DURING THE MAINTENANCE PERIOD ACCORDING TO THE SPECIAL PROVISIONS.

19. CONTRACTOR SHALL GUARANTEE PLANT LONGEVITY AS FOLLOWS: TREES, SHRUBS, GROUNDCOVER & OTHER PLANTING ONE YEAR

20. THE LANDSCAPE AREAS SHALL BE MAINTAINED PER CITY REQUIREMENTS.

21. THE MAXIMUM TOTAL STAKE DEPTH ALLOWED SHALL BE 30". CONTRACTOR SHALL PERMANENTLY MARK THE MAXIMUM DEPTH OF STAKING ON EACH STAKE PRIOR TO PLACING AND VERIFY THAT THE IMPERMEABLE LINER IS NOT BREACHED.

22. CONTRACTOR MAY ELECT TO PLACE A PLASTIC CAP AT EACH STAKE TO FURTHER PROTECT LINER FROM DAMAGE.

23. IF TREE STAKES NEED TO BE DRIVEN DEEPER THAN THE INDICATED GRAVEL DEPTH OR IMPERMEABLE LINERS, CONTRACTOR SHALL PLACE THE IMPERMEABLE LINER 6" BELOW THE MAXIMUM DEPTH OF THE STAKE AND GRADE THE SUBGRADE .05% TOWARDS THE SUBDRAIN IN A 36" WIDE 12" DEEP LINED THROUGH (TRENCH) TO AVOID LOWERING ALL OF THE BASIN BOTTOMS. THE ROCK VOLUME TAKEN UP BY THE ROOT ZONE SHALL BE MADE UP IN OTHER AREAS DIRECTLY ADJACENT TO THE GRAVEL STORAGE DEPTHS OF 4', 3.5' AND 2.5' DEPTH.

TREES

SYM.	QTY.	BOTANICAL NAME	COMMON NAME	SIZE	WATER USE	COMMENTS
LI	5	LAGERSTROMIA INDICA 'TUSCARORA'	TUSCARORA CRAPE MYRTLE	48" BOX	LOW	STANDARD FORM
QA	5	QUERCUS AGRIFOLIA	COATS LIVE OAK	48" BOX	LOW	STANDARD FORM

SHRUBS, SUCCULENTS & GROUNDCOVERS

ACCENT SHRUBS

D	160	LOMANDRA LONGIFOLIA 'BREEZE'	DWARF MAT RUSH	1 GAL.	LOW	
M	35	MELALEUCA VIMINALIS ' LITTLE JOHN'	LITTLE JOHN DWARF BOTTLE BRUSH	5 GAL.	LOW	

GROUNDCOVER

× × × × × ×	825 S.F.	MYOPORUM PARVIFOLIUM	PROSTRATE MYOPORUM	FLATS	LOW	18" O.C. SPACING

TURF GRASS

	8,855 S.F.	TO MATCH EXISTING TURF ON SITE.			HIGH	-

ARCHITECT

westbergwhite architecture
1775 HANCOCK ST, SUITE 120
SAN DIEGO, CA 92110
619.542.1188 619.542.1663 FAX

LICENSED ARCHITECT FRISCO WHITE C-9090 EXP. 10-2025 STATE OF CALIFORNIA

CONSULTANT

ADL PLANNING ASSOCIATES
LAND PLANNING
LANDSCAPE ARCHITECTURE
2195 BASSWOOD AVE. CARLSBAD CA 92008
(760) 729-8637

REGISTERED LANDSCAPE ARCHITECT WILLIAM D. LAWSON 2549 12/31/27 CALIFORNIA

City of La Puente
15900 E. MAIN ST. LA PUENTE, CA. 91744

PLANTING LEGEND & NOTES

La Puente ACTIVITY CENTER
501 GLENDORA AVE. LA PUENTE, CA. 91744

PROJECT NO.: 22008
R.S. A.P.
FILE NAME
DATE: 12/05/2025 DRAWN CHECKED
REVISIONS
SHEET NO. L-5
OF SHEETS

CITY APPROVAL

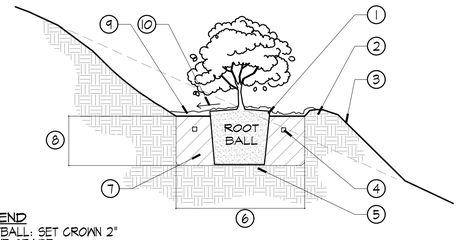

LEGEND

1. ROOTBALL: SET CROWN 2" ABOVE GRADE
2. 2" BASIN BERM FOR SHRUBS
3. FINISH GRADE
4. FERTILIZER TABLET
5. PLACE ROOTBALL OVER NATIVE SUBGRADE
6. PLANTING HOLE: 2 X CONTAINER WIDTH (12" MIN. FOR LINERS)
7. AMENDED BACKFILL
8. CONTAINER DEPTH (12" MIN. FOR LINERS
9. 3" LAYER OF MULCH, MAINTAIN 3" CLEARANCE FROM SHRUB BASE
10. 2% SLOPE (AWAY FROM TRUNK)

NOTE:
WHERE ON SLOPES, THE FRONT AND REAR OF THE PLANTING PITS SHALL BE GRADED TO A MAXIMUM 1:1 SLOPE AND EROSION CONTROL FABRIC SHALL BE INSTALLED ON THESE SLOPES TO CONTROL EROSION WHILE PLANTS ESTABLISH.

(A) SLOPE PLANTING: SHRUBS

SCALE: N.T.S.

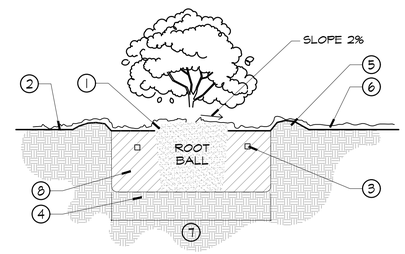

LEGEND

1. ROOTBALL, SET CROWN 1" ABOVE GRADE.
2. FINISH GRADE
3. FERTILIZER TABLET
4. PLACE ROOTBALL OVER NATIVE SUBGRADE
5. 2" WATERING BERM FOR SHRUBS
6. 3" LAYER OF MULCH. MAINTAIN 3" FROM TRUNK
7. PLANTING HOLE: 2 TIMES CONTAINER WIDTH
8. AMENDED BACKFILL

(B) SHRUB PLANTING

SCALE: N.T.S.

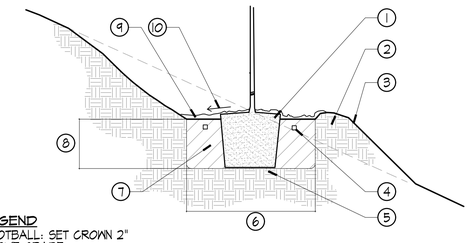

LEGEND

1. ROOTBALL: SET CROWN 2" ABOVE GRADE
2. 4" WATERING BERM FOR TREES
3. FINISH GRADE
4. FERTILIZER TABLET
5. PLACE ROOTBALL OVER NATIVE SUBGRADE
6. PLANTING HOLE: 2 X CONTAINER WIDTH (12" MIN. FOR LINERS)
7. AMENDED BACKFILL
8. CONTAINER DEPTH (12" MIN. FOR LINERS
9. 3" LAYER OF MULCH. MAINTAIN 3" CLEARANCE FROM SHRUB BASE
10. 2% SLOPE (AWAY FROM TRUNK)

NOTE:
WHERE ON SLOPES, THE FRONT AND REAR OF THE PLANTING PITS SHALL BE GRADED TO A MAXIMUM 1:1 SLOPE AND EROSION CONTROL FABRIC SHALL BE INSTALLED ON THESE SLOPES TO CONTROL EROSION WHILE PLANTS ESTABLISH.

(C) SLOPE PLANTING: TREES

SCALE: N.T.S.

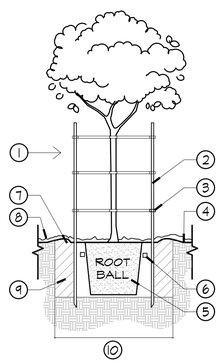

LEGEND

1. POSITION STAKES PARALLEL TO PREVAILING WINDS
2. 2" DIA. 10' PINE LODGE POLE STAKE
3. TREE TIES (3)
4. FINISH GRADE
5. ROOTBALL. SET CROWN 2" ABOVE GRADE
6. FERTILIZER TABLET
7. 4" WATERING BERM
8. 3" LAYER OF MULCH. MAINTAIN 3" FROM TRUNK
9. AMENDED BACKFILL
10. PLANTING PIT. 2 TIMES CONTAINER SIZE

(D) TREE PLANTING: DOUBLE STAKE

SCALE: N.T.S.

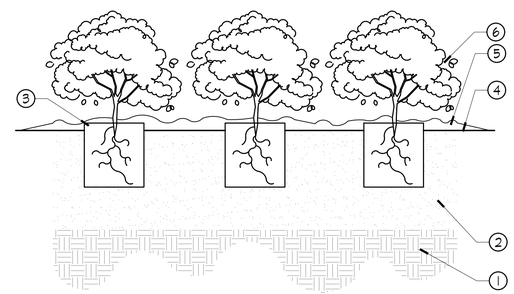

LEGEND

1. EXISTING SUBGRADE
2. AMENDED PLANTING BACKFILL
3. ROOTBALL 2" ABOVE FINISH GRADE
4. FINISH GRADE
5. 3" MULCH LAYER INSTALLED BEFORE PLANTING
6. PLANT TYPE AND SPACING AS SPECIFIED ON PLANS

(E) GROUND COVER PLANTING

SCALE: N.T.S.

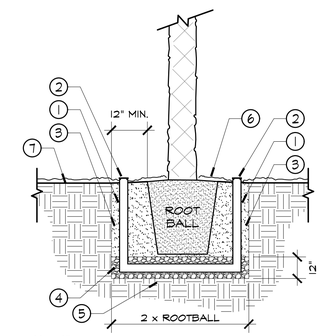

LEGEND

1. 4" SCH. 40 PERFORATED DRAIN PIPE
2. 4" FLAT DRAIN GRATE. TOP OF GRATE TO BE 2" ABOVE FINISH GRADE. (NOT TO BE USED FOR SURFACE DRAINAGE)
3. SAND BACKFILL
4. 12" DEPTH OF ONE INCH (1") CLEAN CRUSHED ROCK OR WASHED PEA GRAVEL
5. NATIVE SUBGRADE
6. 4" LAYER OF MULCH, UNLESS OTHERWISE SPECIFIED. MAINTAIN 3" FROM TRUNK.
7. FINISH GRADE

NOTE:

1. CONTRACTOR TO PROVIDE BRACING OR GUYING AS NECESSARY PER PROJECT AND WEATHER CONDITIONS TO ENSURE HEALTH OF PALMS

(F) PALM PLANTING

SCALE: N.T.S.

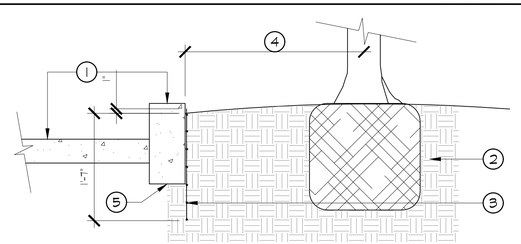

SECTION

1. HARDSCAPE (PAVING, CURBS, ETC.) PER PLANS.
2. TREE PLANTING PER PLANS AND DETAILS
3. UNIVERSAL ROOT BARRIER BY DEEP ROOT. MODEL # UB24-2
4. ROOT BARRIER REQ'D. PER CITY CODE WHERE TREE IS 6'-0" FROM EDGE OF HARDSCAPE, UNLESS OTHERWISE INDICATED ON PLANS. PROPOSED TREE LOCATION TO BE APPROVED PER SPECS. PRIOR TO PLANTING.
5. REMOVE CONCRETE DEBRIS OR OVERPOURS AS REQ'D. TO ALLOW ROOT BARRIER TO LAY FLUSH AGAINST ADJACENT HARDSCAPE.

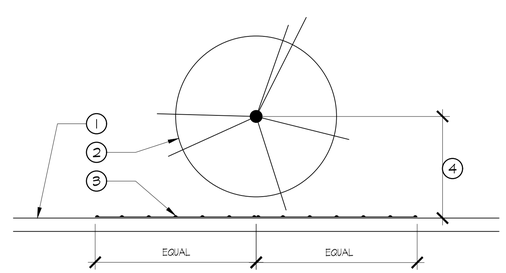

PLAN

(G) ROOT BARRIER

SCALE: N.T.S.

1. STANDARD GREY MEDIUM BROOM FINISH CONCRETE
2. PLANTING AREA
3. 1/2" RADIUS (TYPICAL ON BOTH EDGES)
4. # 3 BAR (MIN. 6" LAP @ SEAMS) MON STRIPS SHALL HAVE W.P. JOINTS @ 5' O.C., & AT CORNERS, AND CHANGES IN DIRECTION

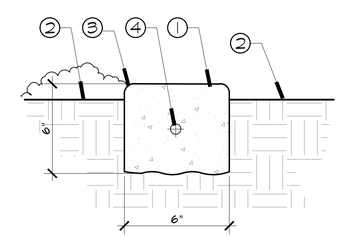

(1) SEE MATERIALS/FINSIH SCHEDULE

(H) 6" CONCRETE HEADER

SCALE: N.T.S

ARCHITECT

westbergwhite architecture
1775 HANCOCK ST, SUITE 120
SAN DIEGO, CA 92110
619.542.1188 619.542.1663 FAX

LICENSED ARCHITECT FRISCO WHITE C-9090 EXP. 10-2025 STATE OF CALIFORNIA

CONSULTANT

ADL PLANNING ASSOCIATES
LAND PLANNING LANDSCAPE ARCHITECTURE
2195 BASSWOOD AVE. CARLSBAD CA 92008
(760) 729-8637

REGISTERED LANDSCAPE ARCHITECT WILLIAM D. LAWSON CALIFORNIA 12/31/27

City of La Puente

15900 E. MAIN ST. LA PUENTE, CA. 91744

PLANTING DETAILS

La Puente ACTIVITY CENTER

501 GLENDORA AVE. LA PUENTE, CA. 91744

PROJECT NO.: 22008
R.S. A.P.
FILE NAME
DATE: 12/05/2025 DRAWN CHECKED
REVISIONS
SHEET NO. L-6
OF SHEETS

CITY APPROVAL

S:\PROJECTS\22511 La Puente Activity Center\4.0 CDs\Planting Plans_rescover.dwg Sep 29, 2025 - 5:25pm calto