ALL IDEAS, DESIGN, ARRANGEMENTS AND PLANS INDICATED OR REPRESENTED BY THIS DRAWING ARE OWNED BY, AND THE PROPERTY OF CARRIER JOHNSON AND WERE CREATED, EVOLVED AND DEVELOPED FOR USE ON, AND IN CONNECTION WITH THIS PROJECT. NONE OF SUCH IDEAS, DESIGN, ARRANGEMENTS, OR PLANS SHALL BE USED BY, OR DISCLOSED TO ANY PERSON, FIRM, OR CORPORATION FOR ANY PURPOSE WHATSOEVER WITHOUT THE WRITTEN PERMISSION OF CARRIER JOHNSON. FILING THESE DRAWINGS OR SPECIFICATIONS WITH ANY PUBLIC AGENCY IS NOT A PUBLICATION OF SAME. NO COPYING, REPRODUCTION OR USE THEREOF IS PERMISSIBLE WITHOUT THE CONSENT OF CARRIER JOHNSON.

SYMBOLS

- DETAIL: DETAIL NUMBER (12) / SHEET WHERE DRAWN (A11.1)
- INTERIOR ELEVA... ELEVATION NUMBER (1) / SHEET WHERE DRAWN (A5.1)
- WALL SECTION: SECTION NUMBER (D5) / SHEET WHERE DRAWN (A12.3)
- BUILDING SECTION: SECTION NUMBER (D6) / SHEET WHERE DRAWN (A12.1)
- TRUE NORTH — PLAN NORTH
- GRID OR COLUMN LINE (A) (1)
- ELEVATION
- REVISION (X)
- W.P. WORK POINT
- XXX ROOM NUMBER
- XX WALL TYPE
- XX DOOR NUMBER
- - KEYNOTE

ABBREVIATIONS

A.B.	ANCHOR BOLT
A.B.C.	AGGREGATE BASE COURSE
A.C.	ASPHALTIC CONCRETE/ AIR CONDITIONING
ACOUST.	ACOUSTICAL
A.D.	ACCESS DOOR/AREA DRAIN AREA DRAIN
ADD	ADDENDUM OR ADDITION
ADJ	ADJUSTABLE
A.F.F.	ABOVE FINISH FLOOR
A.E.F.F.	ABOVE EXISTING FINISH FLOOR
ALUM	ALUMINUM
ALT	ALTERNATE
&	AND
∠	ANGLE
ANOD	ANODIZED
ARCH	ARCHITECT(URAL)
ASPH	ASPHALT
@	AT
BD	BOARD
BTWN	BETWEEN
B.F.	BOTTOM OF FOOTING
BLDG	BUILDING
BLKG	BLOCKING
BM	BEAM
B.N.	BOUNDARY NAIL
B.O.	BOTTOM OF
BOT	BOTTOM
BRG	BEARING
BSMT	BASEMENT
B.U.	BUILT-UP
C (or [ )	CHANNEL
CER	CERAMIC
CB	CATCH BASIN
CG	CORNER GUARD
C.I.P.	CAST-IN-PLACE
C.J.	CONTROL JOINT
CL	CENTERLINE
CLG	CEILING
CLR	CLEAR(ANCE)
CMU	CONCRETE MASONRY UNIT
CLOS.	CLOSET
C.O.	CLEAN OUT
COL	COLUMN
CONC	CONCRETE
CONSTR	CONSTRUCTION
CONT	CONTINUOUS
COORD	COORDINATE
CORR	CORRIDOR
CSK	COUNTERSINK
CTR	CENTER
CR	CARD READER
d	PENNEY (NAILS)
DP	DAMPPROOFING
D.F.	DRINKING FOUNTAIN/ DOUGLAS FIR
DBL	DOUBLE
DIA ( )	DIAMETER
DIAG	DIAGONAL
DIAPH	DIAPHRAGM
DIM	DIMENSION
D.L.	DEAD LOAD
DN.	DOWN
D.S.	DOWNSPOUT
DTL	DETAIL
DWG	DRAWING
DWLS	DOWELS
DWR	DRAWER
E	EAST
EA	EACH
E.B.	EXPANSION BOLT
E.D.F.	ELEC. DRINKING FOUNTAIN
E.J.	EXPANSION JOINT
EL	ELEVATOR
ELEC	ELECTRIC(AL)
ELEV	ELEVATION
E.N.	EDGE NAIL
ENC	ENCLOSURE
EQ	EQUAL
EQUIP	EQUIPMENT
E.W.	EACH WAY
EWC	ELECTRIC WATER COOLER
EXT	EXTERIOR
EXST	EXISTING
(E)	EXISTING
F.B.	FLAT BAR
F.D.	FLOOR DRAIN
FDN	FOUNDATION
F.E.	FIRE EXTINGUISHER
F.E.C.	FIRE EXTINGUISHER CABINET
F.F.	FINISH FLOOR / FACTORY FINISH
F.F.E	FINISHED FLOOR ELEVATION
F.P.E	FINISHED PAVING ELEVATION
F.G.	FINISHED GRADE
F.H.C.	FIRE HOSE CABINET
FIN	FINISH
FLR	FLOOR
FLUOR	FLUORESCENT
F.N.	FIELD NAILING
F.O.	FACE OF (SPECIFY ITEM)
F.O.B.	FACE OF BRICK
F.O.C.	FACE OF CONCRETE
F.O.F.	FACE OF FINISH
F.O.M.	FACE OF MASONRY
F.O.P.	FACE OF PANEL
F.O.S.	FACE OF STUD
FS.	FINISH SURFACE
FT	FOOT/FEET
FTG	FOOTING
F.S.	FLOOR SINK
GA	GAUGE
GALV	GALVANIZED
G.I.	GALVANIZED IRON
GL	GLASS
GLB	GLU LAM BEAM
GYP. BD.	GYPSUM BOARD
H.B.	HOSE BIBB
H.C.	HOLLOW CORE
HDR	HEADER
HDWR	HARDWARE
HGR	HANGER
H.M.	HOLLOW METAL
HORIZ	HORIZONTAL
HR	HOUR
HT	HEIGHT
HVAC	HEATING, VENTILATING AND AIR CONDITIONING
H.W.	HOT WATER
I.D.	INSIDE DIAMETER
IN	INCH
INCL	INCLUDED
I.E.	INVERT ELEVATION
INSUL	INSULATION
INT	INTERIOR
JAN	JANITOR
JST	JOIST
JT	JOINT
KIT	KITCHEN
KJ	KEYED JOINT
KO	KNOCKOUT
LAM	LAMINATED
LAV	LAVATORY
L.G.	LAG BOLT
L.L.	LIVE LOAD
LLH	LONG LEG HORIZONTAL
LLV	LONG LEG VERTICAL
LONGIT	LONGITUDINAL
L.P.	LOW POINT
L.W.C.	LIGHT WEIGHT CONCRETE
MAS	MASONRY
M.O.	MASONRY OPENING
MAT'L	MATERIAL
MAX	MAXIMUM
MECH	MECHANICAL
MEMB	MEMBRANE
MET	METAL
MFR	MANUFACTURER
MIN	MINIMUM
MISC	MISCELLANEOUS
N	NORTH
N.A.	NOT APPLICABLE
N.I.C.	NOT IN CONTRACT
N.T.S.	NOT TO SCALE
NO	NUMBER
O.C.	ON CENTER
O.D.	OUTSIDE DIAMETER
O.F.	OVERFLOW/OUTSIDE FACE
O.F.C.I.	OWNER FURNISHED/ CONTRACTOR INSTALLED
O.F.O.I.	OWNER FURNISHED/ OWNER INSTALLED
O.H.	OPPOSITE HAND/OVERHEAD
OPN'G.	OPENING
OPP	OPPOSITE
PL	PROPERTY LINE/PLATE
PERIM	PERIMETER
PERP(L)	PERPENDICULAR
PLAM	PLASTIC LAMINATE
PLAS	PLASTER
PLAST	PLASTIC
P.D.	PLANTER DRAIN
PLWD	PLYWOOD
P.S.F.	POUNDS PER SQUARE FOOT
P.S.I.	POUNDS PER SQUARE INCH
P.T.	PRESSURE TREATED
P.T.S.	POST TENSIONING SLAB
PVC	POLYVINYL CHLORIDE
R	RISE
R.C.P.	REFLECTED CEILING PLAN
R.D.	ROOF DRAIN
REF	REFER(ENCE)
REINF	REINFORCING
REQ(D)	REQUIRED
REQMTS	REQUIREMENTS
RESIL	RESILIENT
RET	RETAIN(ING)
RM	ROOM
S	SOUTH
S.C.	SOLID CORE
SCHED	SCHEDULE
S.F.	SQUARE FEET
SHT	SHEET
SIM	SIMILAR
S.M.F.E.	SURFACE MOUNTED FIRE EXTINGUISHER
SPEC	SPECIFICATION
SQ	SQUARE
S.S.	STAINLESS STEEL
STAGG	STAGGERED
STD	STANDARD
STIFF	STIFFENED
STR	STRUCTURAL
STL	STEEL
SYM	SYMMETRICAL
T	TREAD
T.C.	TOP OF CURB/ TOP OF CONCRETE
T&G	TONGUE AND GROOVE
THR	THRESHOLD
T.I.	TENANT IMPROVEMENT
T.J.	TOOLED JOINT
T.N.	TOE NAILED
T.O.	TOP OF (SPECIFY ITEM)
T.O.C.	TOP OF CURB
T.O.P.	TOP OF PARAPET
T.O.S.	TOP OF SLAB
T.O.W.	TOP OF WALL
TRANS	TRANSVERSE
TYP	TYPICAL
U.B.C.	UNIFORM BUILDING CODE
U.N.O.	UNLESS NOTED OTHERWISE
UL	UNDERWRITERS LABORATORY
V.C.T.	VINYL COMPOSITION TILE
VENT	VENTILATOR/VENTILATION
VERT	VERTICAL
V.R.	VAPOR RETARDER
VTR	VENT THRU ROOF
VWC	VINYL WALL COVERING
W	WEST
WDW	WINDOW
W/	WITH
W.GL.	WIRE GLASS
W.H.	WATER HEATER
W/O	WITHOUT
WP	WATERPROOF
W.P.J.	WEAKENED PLANE JOINT
W.R.	WATER RESISTANT
WT	WEIGHT
W.W.F.	WELDED WIRE FABRIC
W.W.M.	WELDED WIRE MESH

PROJECT DATA

PROJECT DESCRIPTION :

REMODELED EXTERIOR FACADE AND TENANT IMPROVEMENT TO THE MAIN BUILDING, SITE WORK AND LANDSCAPING NOT INCLUDING THE ANCILLARY STRUCTURE.

ADDRESS :

2534 SOUTH ARCHIBALD
ONTARIO, CALIFORNIA

AREA ANALYSIS :

MAIN BUILDING	
EXISTING FIRST FLOOR	152,435 GSF
EXISTING SECOND FLOOR ADMINISTRATION	10,370 GSF
EXISTING SECOND FLOOR LOCKER AREA	1,280 GSF
SUB TOTAL EXISTING MAIN BUILDING	164,085 GSF
NET ADDED AREA AT ENTRANCE	1,170 GSF
ADDED AREA AT SALLY PORT	2,480 GSF
TOTAL FOR MAIN BUILDING (EXISTING & NEW)	167,735 GSF
EXISTING SUPPORT BUILDING (NOT A PART)	7,705 GSF

(2)

ALLOWABLE AREA IS UNLIMITED PER SECTION 505.2 OF THE CALIFORNIA BUILDING CODE.

CONSTRUCTION TYPE :

TYPE V ONE HOUR, WITH FIRE RESISTIVE SUBSTITUTION PER CBC SECTION 508

OCCUPANCY : (2)

B OCCUPANCY OVERALL
A2.1, A3 OCCUPANCY
S-3 OCCUPANCY; SALLY PORT

VICINITY MAP

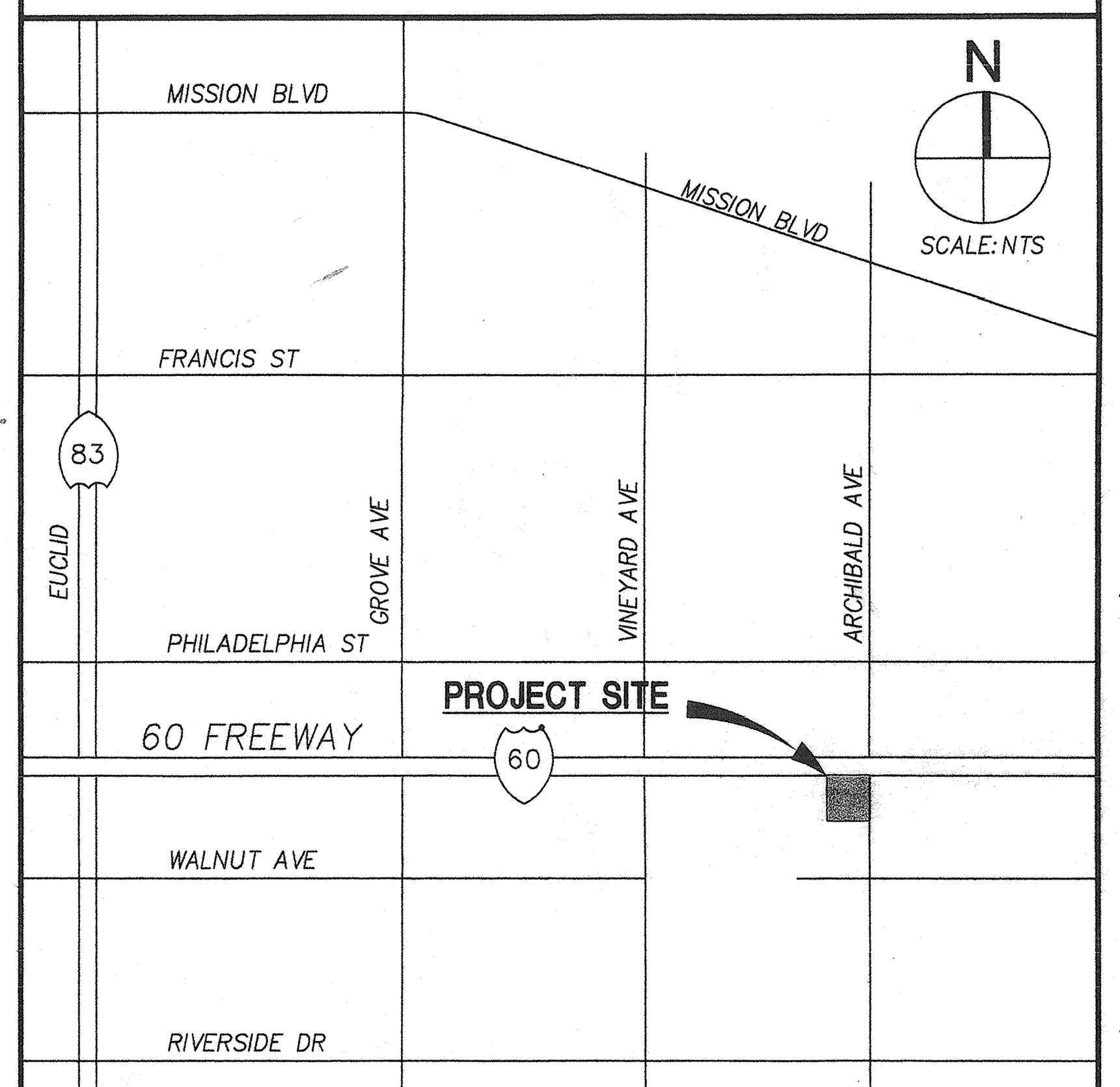

SHEET INDEX

GENERAL

A0.1 COVER SHEET
A0.0 EXISTING SITE PLAN
A0.2 ACCESSIBILITY NOTES / TITLE 24
(2) A0.3 GENERAL NOTES
A0.4 MOUNTING HEIGHTS & ACCESSORIES
A1.0.0 OVERALL SITE PLAN
A1.0.1 OVERALL KEY PLAN EXITING PLAN
A1.0.2 SECOND LEVEL EXITING PLAN
A1.0.3 SITE DETAILS
A1.0.4 GATE DETAILS
(5) A1.0.5 FENCING AND GATE DETAILS
A1.0.6 SOUTH PAVING PLAN
A1.0.7 NORTH PAVING PLAN
A1.0.8 WEST PAVING PLAN

CIVIL

C-1 DEMOLITION PLAN
C-2 GRADING PLAN
C-3 GRADING PLAN
C-4 UTILITY PLAN
C-5 HORIZONTAL CONTROL AND STRIPING PLAN
C-6 EROSION CONTROL PLAN

LANDSCAPE

A0.0 EXISTING IRRIGATION SITE PLAN
L-200 IRRIGATION PLAN
L-201 IRRIGATION PLAN AT COURTYARD
L-300 IRRIGATION DETAILS
(5) L-400 TREE PLANTING PLAN
L-401 SHRUB PLANTING PLAN
L-402 SHRUB PLANTING PLAN AT COURTYARD
L-500 PLANTING DETAILS

ARCHITECTURAL

A2.0.0 DEMO FLOOR PLAN OVERAL FIRST LEVEL
A2.0.1 DEMO FLOOR PLAN - FIRST LEVEL - AREA 1
A2.0.2 DEMO FLOOR PLAN - FIRST LEVEL - AREA 2
A2.0.3 DEMO FLOOR PLAN - FIRST LEVEL - AREA 3
A2.0.4 DEMO FLOOR PLAN - FIRST LEVEL - AREA 4
A2.0.5 DEMO FLOOR PLAN - SECOND LEVEL

A2.1.1 FLOOR PLAN - FIRST LEVEL - AREA 1
A2.1.1FP FINISH PLAN - FIRST LEVEL - AREA 1
A2.1.1FE FURNITURE & EQUIPMENT PLAN - FIRST LEVEL - AREA 1
A2.1.2 FLOOR PLAN - FIRST LEVEL - AREA 2
A2.1.2FP FINISH PLAN - FIRST LEVEL - AREA 2
A2.1.2FE FURNITURE & EQUIPMENT PLAN - FIRST LEVEL - AREA 2
A2.1.3 FLOOR PLAN - FIRST LEVEL - AREA 3
A2.1.3FP FINISH PLAN - FIRST LEVEL - AREA 3
A2.1.3FE FURNITURE & EQUIPMENT PLAN - FIRST LEVEL - AREA 3
A2.1.4 FLOOR PLAN - FIRST LEVEL - AREA 4
A2.1.4FP FINISH PLAN - FIRST LEVEL - AREA 4
A2.1.4FE FURNITURE & EQUIPMENT PLAN - FIRST LEVEL - AREA 4
A2.2.5 FLOOR PLAN - SECOND LEVEL - AREA 5
A2.2.5FP FINISH PLAN - SECOND LEVEL - AREA 5
A2.2.5FE FURNITURE & EQUIPMENT PLAN - SECOND LEVEL - AREA 5

A2.3.0 FINISH SPECIFICATION

A2.4.0 ROOF PLAN - OVERALL

A3.1.1R REFLECTED CEILING PLAN - FIRST LEVEL - AREA 1
A3.1.2R REFLECTED CEILING PLAN - FIRST LEVEL - AREA 2
A3.1.3R REFLECTED CEILING PLAN - FIRST LEVEL - AREA 3
A3.1.4R REFLECTED CEILING PLAN - FIRST LEVEL - AREA 4
A3.2.5R REFLECTED CEILING PLAN - SECOND LEVEL

A4.1 ENLARGED FLOOR PLANS
A4.2 ENLARGED FLOOR PLANS
(2) A4.3 ENLARGED FLOOR PLANS
A4.4 ENLARGED FLOOR PLANS

A5.1 OVERALL EXISTING BUILDING ELEVATIONS
A5.1.1 BUILDING ELEVATIONS

A6.0 EXISTING BUILDING SECTIONS
A6.1.1 BUILDING SECTIONS
A6.1.2 BUILDING SECTIONS
A6.1.3 BUILDING SECTIONS
A6.1.4 BUILDING SECTIONS
A6.1.5 WALL SECTIONS & ENLARGED ELEVATIONS
A6.1.6 WALL SECTIONS & ENLARGED ELEVATIONS
A6.1.7 WALL SECTIONS & ENLARGED ELEVATIONS
A6.1.8 WALL SECTIONS & ENLARGED ELEVATIONS
A6.1.9 WALL SECTIONS & ENLARGED ELEVATIONS

A7.1 INTERIOR ELEVATIONS
A7.2 INTERIOR ELEVATIONS
A7.3 INTERIOR ELEVATIONS
(5) A7.4 INTERIOR ELEVATIONS
A7.5 INTERIOR ELEVATIONS
A7.6 INTERIOR ELEVATIONS
A7.7 INTERIOR ELEVATIONS

ARCHITECTURAL (CONTINUE)

A8.0.1 WALL TYPES
A8.0.2 DETAILS
A8.0.3 DETAILS
A8.0.4 DETAILS
A8.0.5 DETAILS
A8.0.6 DETAILS

A8.1.1 DETAILS
A8.1.2 DETAILS
(2) A8.1.3 DETAILS
A8.1.4 DETAILS
A8.1.5 DETAILS

A9.0.1 SCHEDULE, DOORS, FRAMES, & DOOR TYPES
A9.0.2 SCHEDULE, DOORS, FRAMES, & DOOR TYPES

STRUCTURAL

S1.1 GENERAL NOTES AND SHEET INDEX
S1.2 TYPICAL DETAILS
S1.3 TYPICAL DETAILS
S1.4 TYPICAL DETAILS
S1.5 MISCELLANEOUS DETAILS
S1.6 MISCELLANEOUS DETAILS
S2.1 GROUND FLOOR/FOUNDATION PLAN
S2.2 ROOF FRAMING PLAN
S2.3 MEZZANINE FLOOR, ROOF FRAMING PLAN, AND DETAILS
S2.4 PARTIAL FOUNDATION, ROOF FRAMING, FRAME ELEV. AND DETAILS
S3.1 EXISTING BEAM SCHEDULE AND DETAILS
S3.2 STEEL CANOPY AND DETAILS
S3.3 ELEVATIONS AND DETAILS

MECHANICAL

M-0.1 HVAC - LEGEND, NOTES & SCHEDULES
M-0.1A HVAC - LEGEND, NOTES & SCHEDULES
M-2.1.1 FLOOR PLAN - FIRST LEVEL - AREA 1
M-2.1.2 FLOOR PLAN - FIRST LEVEL - AREA 2
M-2.1.3 FLOOR PLAN - FIRST LEVEL - AREA 3
M-2.1.4 FLOOR PLAN - FIRST LEVEL - AREA 4
M-2.1.4H FLOOR PLAN - FIRST LEVEL - HOLDING AREA
M-2.2 FLOOR PLAN - SECOND LEVEL
M-2.3.1 MECHANICAL ROOF PLAN - AREA 1
M-2.3.2 MECHANICAL ROOF PLAN - AREA 2
M-2.3.3 MECHANICAL ROOF PLAN - AREA 3
M-2.3.4 MECHANICAL ROOF PLAN - AREA 4
M-5.1 HVAC - CONTROLS

PLUMBING

P-0.1 PLUMBING GENERAL NOTES AND SCHEDULES
P-1.1 PLUMBING SITE PLAN
P-2.1.0 PLUMBING PLAN - OVERALL FIRST LEVEL
P-2.2.0 PLUMBING PLAN - OVERALL SECOND LEVEL
P-2.4.0 PLUMBING PLAN - OVERALL ROOF
P-3.1.1 PLUMBING PARTIALS
P-3.1.2 PLUMBING PARTIALS
P-3.1.3 PLUMBING PARTIALS
P-3.1.4 PLUMBING PARTIALS
P-3.1.5 PLUMBING EQUIPMENT YARD
P-3.1.6 PLUMBING PARTIALS
(2) P-4.1 PLUMBING DETAILS
P-5.1 WASTE & VENT RISER DIAGRAMS

ELECTRICAL

E1.1 ELECTRICAL SYMBOL LIST
E1.2 ABBREVIATIONS AND SCHEDULES

MMC-E1.5 & 1.7 POWER & GROUNDING
MM-E1.6 SINGLE LINE DIAGRAMS
MM-E1.9 POWER PLAN - I.T. ROOMS
MM-E2.1 POWER PLAN - FIRST LEVEL -AREA 1
MM-E2.2 POWER PLAN - FIRST LEVEL -AREA 2
MM-E2.3 POWER PLAN - FIRST LEVEL -AREA 3
MM-E2.4 POWER PLAN - FIRST LEVEL -AREA 4
MM-E2.5 VAV / CSFD POWER PLAN - AREA 1
MM-E2.6 VAV / CSFD POWER PLAN - AREA 2
MM-E2.7 VAV / CSFD POWER PLAN - AREA 3
MM-E2.8 VAV / CSFD POWER PLAN - AREA 4
MM-E2.9 VAV / CSFD POWER PLAN - SECOND LEVEL

MM-E3.0 COMMUNICATIONS DUCTBANK
MM-E3.0 A&B SITE LIGHTING
MM-E3.01 PARKING LOT LIGHTING
MM-E3.1 LIGHTING PLAN - FIRST LEVEL - AREA 1
MM-E3.2 LIGHTING PLAN - FIRST LEVEL - AREA 2
MM-E3.3 LIGHTING PLAN - FIRST LEVEL - AREA 3
MM-E3.4 LIGHTING PLAN - FIRST LEVEL - AREA 4

ELECTRICAL (CONTINUE)

MM-E4.0 ROOF POWER
MM-E4.1 CABLE TRAY PLAN - AREA 1
MM-E4.2 CABLE TRAY PLAN - AREA 2
MM-E4.3 CABLE TRAY PLAN - AREA 3
MM-E4.4 CABLE TRAY PLAN - AREA 4
MM-E4.5 OVERHEAD FEEDER CONDUIT - AREA 1
MM-E4.6 OVERHEAD FEEDER CONDUIT - AREA 2
MM-E4.7 OVERHEAD FEEDER CONDUIT - AREA 3
MM-E4.8 OVERHEAD FEEDER CONDUIT - AREA 4
MM-E4.9 OVERHEAD FEEDER CONDUIT - SECOND LEVEL
MM-E7.1 MEZZANINE POWER
MM-E8.1 MEZZANINE LIGHTING
(2) MM-E12.1 PANEL SCHEDULES
MM-E12.2 PANEL SCHEDULES
MM-E12.3 PANEL SCHEDULES
MM-E12.4 PANEL SCHEDULES

FIRE SUPPRESSION

FP-1 COVER SHEET, SYSTEM NOTES, BILL OF MATERIAL
FP-2 DETECTION CONTROLS
FP-3 FM-200 PIPING PLANS & ISOMETRIC
FP-4 FM-200 PIPING PLANS & ISOMETRIC
FP-5 CONTROL PANEL WIRING DIAGRAM
FP-6 ELECTRICAL DETAILS
FP-7 MECHANICAL DETAILS

FIRE SPRINKLERS

FS-1 OF 5 SITE, UPPER LEVEL & HOLDING AREA PIPING PLANS
FS-2 OF 5 PIPING PLAN - AREA 2
FS-3 OF 5 PIPING PLAN - AREA 3
FS-4 OF 5 PIPING PLAN - AREA 1
FS-5 OF 5 PIPING PLAN - AREA 4

DRAWING NO:
A2.1.1 (5) = DENOTES REPLACEMENT OF EXISTING SHEET FOR ADDENDUM OR REVISION PURPOSE.

PROJECT TEAM

OWNERS REPRESENTATIVE:
RDK CONSULTING, INC.
7742 HERSCHEL AVENUE, SUITE H
LA JOLLA, CA 92037

CONTACT: RICK KING
PHONE: 858.454.5996
FAX: 858.454.7448
EMAIL: rick@rdkconsulting.com

ARCHITECT:
CARRIER JOHNSON
2600 MICHELSON DRIVE, SUITE 400
IRVINE, CALIFORNIA 92614-6220

CONTACT: GARY MANGHAM
PHONE: 949.955.2353
FAX: 949.955.2377
EMAIL: wgm@carrierjohnson.com

CIVIL
PENCO ENGINEERING
ONE TECHNOLOGY PARK, BUILDING J-725
IRVINE, CA 92618

CONTACT: DAVE ELWELL
PHONE: 949.753.8111
FAX: 949.753.0775
EMAIL: david@pencoeng.com

STRUCTURAL
RDG
4850 BARRANCA PARKWAY, SUITE 205
IRVINE, CALIFORNIA 92604

CONTACT: JEFF ROESSLER
PHONE: 949.651.8111
FAX: 949.651.8177
EMAIL: RDGSE@AOL.com

PLUMBING
GEM ENGINEERING
17065 CAMINO SAN BERNARDO, SUITE 200
SAN DIEGO, CALIFORNIA 92127

CONTACT: JEREMY CLIFTON
PHONE: 858.753.1000
FAX: 858.753.1001
EMAIL: clifton@gemengineering.com

ELECTRICAL
ILA ZAMMIT
3625 RUFFIN ROAD, SUITE 300
SAN DIEGO, CALIFORNIA 92123

CONTACT: FRED WOLFF
PHONE: 858.279.0242
FAX: 858.279.0711
EMAIL: fwolff@ilaz.com

LANDSCAPE
IMA DESIGN
2500 MICHELSON DRIVE, SUITE 125
IRVINE, CALIFORNIA 92612

CONTACT: ANN CUTNER
PHONE: 949.250.0023
FAX: 949.250.0043
EMAIL: acutner@imadesign.com

CARRIER JOHNSON

GORDON R. CARRIER AIA
MICHAEL C. JOHNSON AIA

WILLIAM C. BOCKEN AIA
DEBORAH P. ELLIOTT IIDA

2600 MICHELSON DRIVE
SUITE 400
IRVINE, CALIFORNIA
92612

TEL 949 955-2353
FAX 949 955-2377

1301 THIRD AVENUE
SAN DIEGO, CALIFORNIA
92101

TEL 619 239-2353
FAX 619 239-6227

RECORD DOCUMENTS

THESE DOCUMENTS RELEASED BY CARRIER JOHNSON FOR USE AS RECORD DOCUMENTS WILL SHOW THE REPORTED LOCATION OF THE WORK AND SIGNIFICANT CHANGES MADE DURING THE CONSTRUCTION PROCESS, AND ARE BASED ON UNVERIFIED INFORMATION PROVIDED BY THE CONTRACTOR AND OTHER PARTIES WHICH WILL BE ASSUMED RELIABLE. CARRIER JOHNSON CANNOT AND DOES NOT WARRANT THE ACCURACY AND/OR COMPLETENESS OF THIS INFORMATION AND SHALL NOT BE RESPONSIBLE FOR ANY ERRORS OR OMISSIONS WHICH MAY BE INCORPORATED THEREIN AS A RESULT. FUTURE CONSTRUCTION PLANNING MUST INCLUDE FIELD CONFIRMATION OF EXISTING CONDITIONS.

DEFERRED SUBMITTAL ITEMS

1. EXTERIOR LIGHT GAUGE METAL FRAMING.
2. EXTERIOR CURTAIN WALL AND CURTAIN WALL CALCULATIONS.
3. FIRE SPRINKLER SYSTEM.
4. MECHANICAL SYSTEM AND CALCULATIONS. (2)

CERTIFICATE OF COMPLIANCE Part 1 of 2 **ENV-1**

PROJECT NAME: Ontario Police Department	DATE: 4/29/2003
PROJECT ADDRESS: 2534 South Archibald Avenue Ontatio	Building Permit #
PRINCIPAL DESIGNER - ENVELOPE: Carrier Johnson Architecture	TELEPHONE: (949) 955-2353
DOCUMENTATION AUTHOR: WESTERN ALLIED	TELEPHONE: (562) 944-6341 — Checked by/Date Enforcement Agency Use

GENERAL INFORMATION

DATE OF PLANS: 4/30/2003	BUILDING CONDITIONED FLOOR AREA: 135,775 Sq.Ft.	CLIMATE ZONE: 10
BUILDING TYPE	[X] NONRESIDENTIAL [ ] HIGH RISE RESIDENTIAL	[ ] HOTEL/MOTEL GUEST ROOM
PHASE OF CONSTRUCTION	[ ] NEW CONSTRUCTION [ ] ADDITION [ ] ALTERATION	[ ] EXISTING + ADDITION
METHOD OF ENVELOPE COMPLIANCE	[ ] COMPONENT [X] OVERALL ENVELOPE	[ ] PERFORMANCE

STATEMENT OF COMPLIANCE

This Certificate of Compliance lists the building features and performance specifications needed to comply with Title 24, Parts 1 and 6 of the California Code of Regulations. This certificate applies only to building envelope requirements.

The documentation preparer hereby certifies that the document is accurate and complete.

DOCUMENTATION AUTHOR: Western Allied Corp. M. Taylor — SIGNATURE: Michael J. Taylor — DATE: 4/30/03

The Principal Envelope Designer hereby certifies that the proposed building design represented in this set of construction documents is consistent with the other compliance forms and worksheets, with the specifications, and with any other calculations submitted with this permit application. The proposed building has been designed to meet the envelope requirements contained in Sections 110, 116 through 118, and 140, 142, 143 or 149 of Title 24, Part 6.

Please check one:

[ ] I hereby affirm that I am eligible under the provisions of Division 3 of the Business and Professions Code to sign this document as the person responsible for its preparation; and that I am licensed in the state of California as a civil engineer or mechanical engineer, or I am a licensed architect.

[ ] I affirm that I am eligible under the exemption to Division 3 of the Business and Professions Code by Section 5537.2 or 6737.3 to sign this document as the person responsible for its preparation; and that I am a licensed contractor performing this work.

[ ] I affirm that I am eligible under Division 3 of the Business and Professions Code to sign this document because it pertains to a structure or type of work described as exempt pursuant to Business and Professions Code Sections 5537, 5538, and 6737.1.

PRINCIPAL ENVELOPE DESIGNER - NAME: Carrier Johnson Architecture — SIGNATURE — DATE — LIC. #

ENVELOPE MANDATORY MEASURES

Indicate location on plans of Note Block for Mandatory Measures

INSTRUCTIONS TO APPLICANT

For detailed instructions on the use of this and all Energy Efficiency Standards compliance forms, please refer to the Nonresidential Manual published by the California Energy Commission.
ENV-1: Required on plans for all submittals. Part 2 may be incorporated in schedules on plans.
ENV-2: Used for all submittals; choose appropriate version depending on method of envelope compliance.
ENV-3: Optional. Use if default U-values are not used. Choose appropriate version for assembly U-value to be calculated.

EnergyPro 3.1 By EnergySoft User Number: 3260 Job Number: 11755 Page 3 of 19

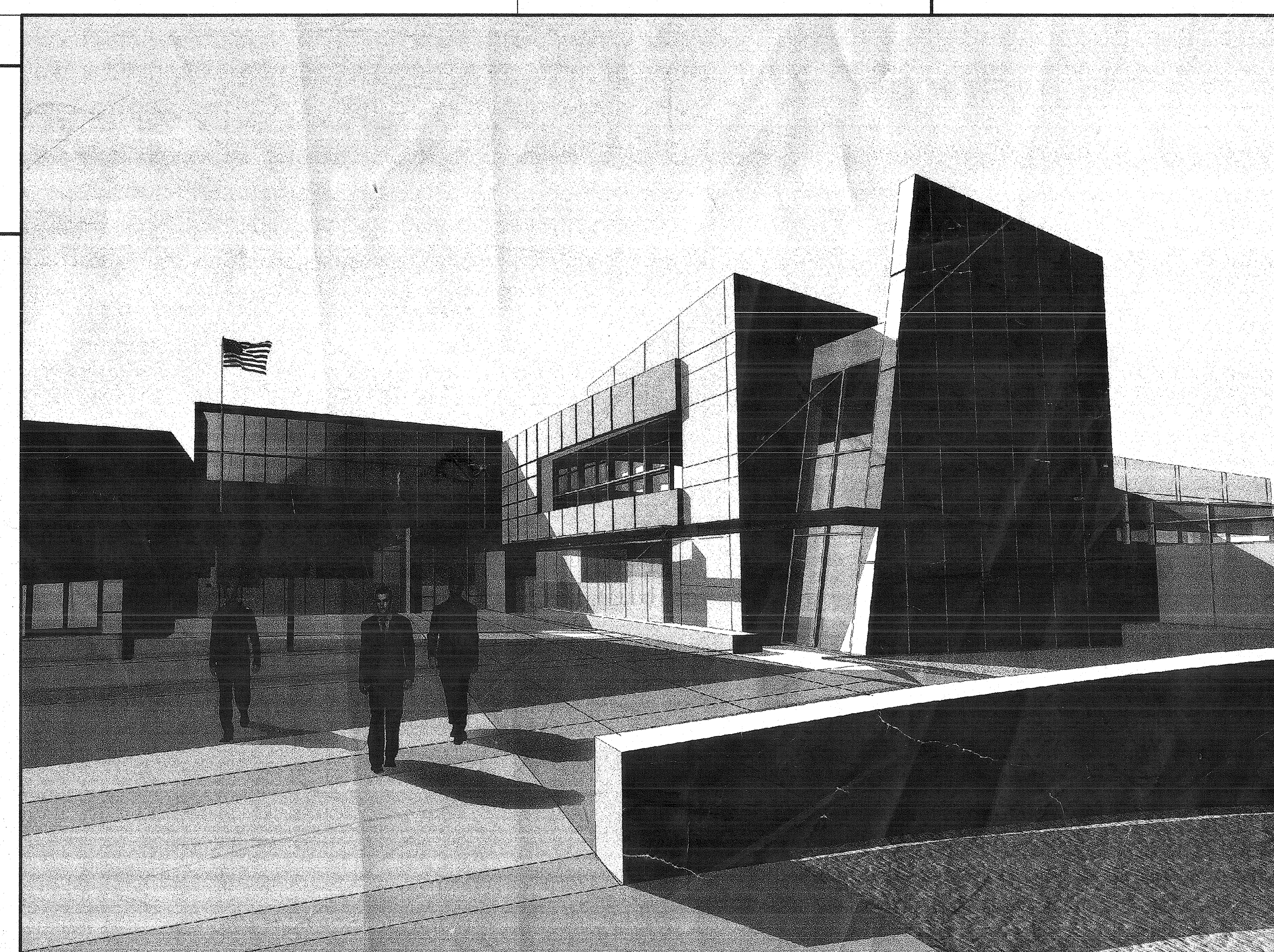

RECORD DOCUMENTS
06.11.2004

ONTARIO PD:HEADQUARTERS

ONTARIO PD:: HEADQUARTERS
2534 S. ARCHIBALD AVE., ONTARIO, CALIFORNIA 91761

(F13) Field Order #13 07.01.03
(5) Addendum 5 04.21.2003
(3) Addendum 3
(2) Addendum 2/Bldg. Dept. Re-Submittal 03.20.2003
Building Dept. Submittal 02.24.20..
ISSUES:

DIRECTORY/FILE NUMBER: 4511-..
XREF'S DRAWINGS:
PROJECT NUMBER: 4511.00
DRAWN BY: CHECKED BY:
DATE: 1/23/03
SCALE: AS NOTED
TITLE: TITLE SHEET

DRAWING NO:
A0.1

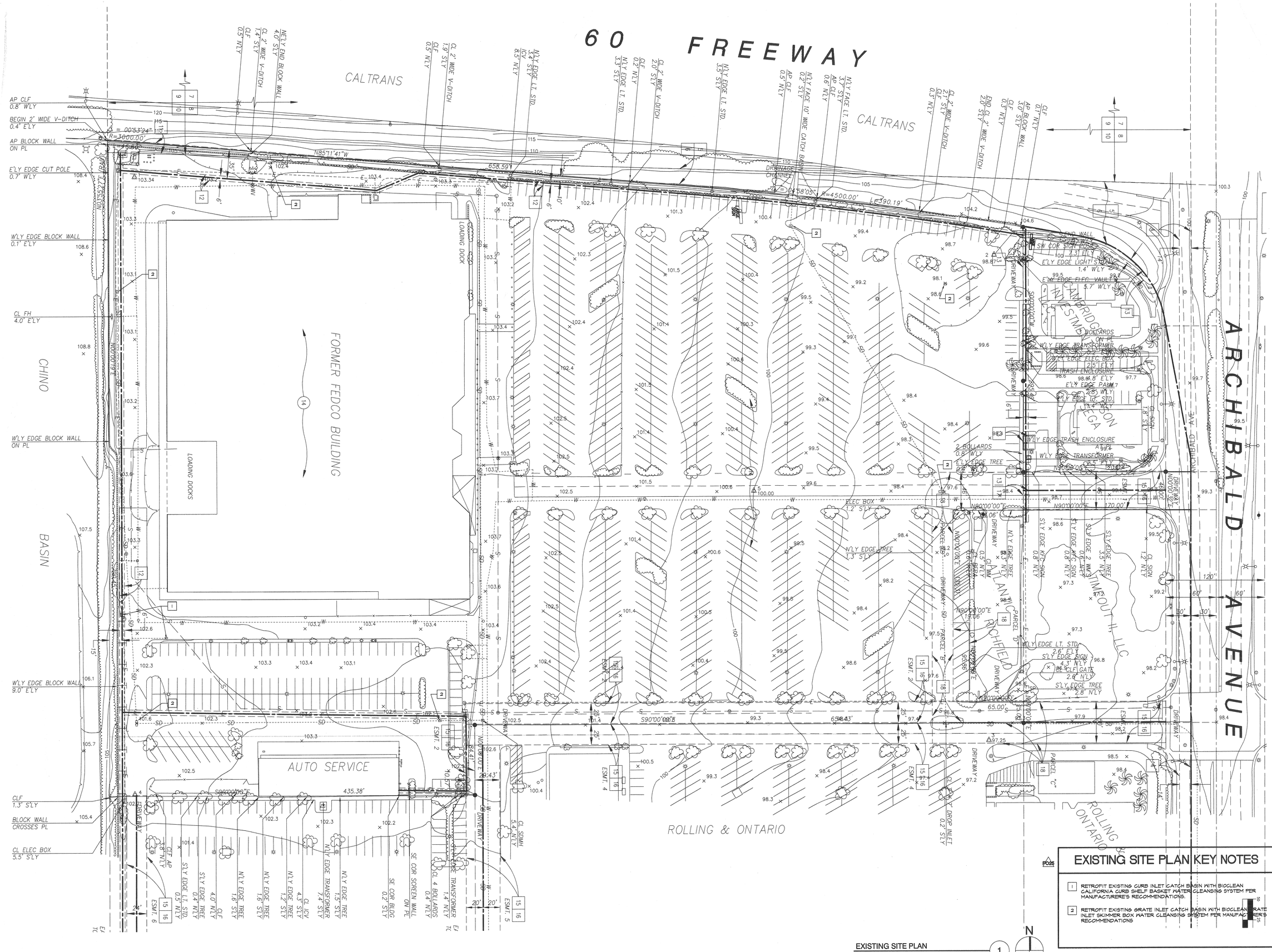

EXISTING SITE PLAN
1"=20'

EXISTING SITE PLAN KEY NOTES

1. RETROFIT EXISTING CURB INLET CATCH BASIN WITH BIOCLEAN CALIFORNIA CURB SHELF BASKET WATER CLEANSING SYSTEM PER MANUFACTURERE'S RECOMMENDATIONS.
2. RETROFIT EXISTING GRATE INLET CATCH BASIN WITH BIOCLEAN GRATE INLET SKIMMER BOX WATER CLEANSING SYSTEM PER MANUFACTURER'S RECOMMENDATIONS

CARRIER JOHNSON
ARCHITECTURE
INTERIOR DESIGN
PLANNING

GORDON R. CARRIER AIA
MICHAEL C. JOHNSON AIA

WILLIAM C. BOCKEN AIA
DEBORAH P. ELLIOTT IIDA

2600 MICHELSON DRIVE
SUITE 400
IRVINE, CALIFORNIA
92612

TEL 949 955-2353
FAX 949 955-2377

1301 THIRD AVENUE
SAN DIEGO, CALIFORNIA
92101

TEL 619 239-2353
FAX 619 239-6227

RECORD DOCUMENTS

THESE DOCUMENTS RELEASED BY CARRIER JOHNSON FOR USE AS RECORD DOCUMENTS WILL SHOW THE REPORTED LOCATION OF THE WORK AND SIGNIFICANT CHANGES MADE DURING THE CONSTRUCTION PROCESS, AND ARE BASED ON UNVERIFIED INFORMATION PROVIDED BY THE CONTRACTOR AND OTHER PARTIES WHICH WILL BE ASSUMED RELIABLE. CARRIER JOHNSON CANNOT AND DOES NOT WARRANT THE ACCURACY AND/OR COMPLETENESS OF THIS INFORMATION AND SHALL NOT BE RESPONSIBLE FOR ANY ERRORS OR OMISSIONS WHICH MAY BE INCORPORATED THEREIN AS A RESULT. FUTURE CONSTRUCTION PLANNING MUST INCLUDE FIELD CONFIRMATION OF EXISTING CONDITIONS.

ONTARIO PD:: HEADQUARTERS

2534 S. ARCHIBALD AVE., ONTARIO, CALIFORNIA 91761

F13	Field Order #13 07.01.03
5	Addendum 5 04.21.2003
3	Addendum 3
2	Addendum 2/Bldg. Dept. Re-Submittal 03.20.2003
	Building Dept. Submittal 02.24.2003

ISSUES:
DIRECTORY/FILE NUMBER: 4511-A0
XREF'S DRAWINGS:
PROJECT NUMBER: 4511.00
DRAWN BY: CHECKED BY:
DATE:
SCALE: 1"=20'
TITLE: EXISTING SITE PLAN
DRAWING NO: A0.0

ALL IDEAS, DESIGN, ARRANGEMENTS AND PLANS INDICATED OR REPRESENTED BY THIS DRAWING ARE OWNED BY, AND THE PROPERTY OF CARRIER JOHNSON, AND WERE CREATED, EVOLVED AND DEVELOPED FOR USE ON, AND IN CONNECTION WITH THIS PROJECT. NONE OF SUCH IDEAS, DESIGN, ARRANGEMENTS, OR PLANS SHALL BE USED BY, OR DISCLOSED TO ANY PERSON, FIRM, OR CORPORATION FOR ANY PURPOSE WHATSOEVER WITHOUT THE WRITTEN PERMISSION OF CARRIER JOHNSON. FILING THESE DRAWINGS OR SPECIFICATIONS WITH ANY PUBLIC AGENCY IS NOT A PUBLICATION OF SAME. NO COPYING, REPRODUCTION OR USE THEREOF IS PERMISSIBLE WITHOUT THE CONSENT OF CARRIER JOHNSON.

ALL IDEAS, DESIGN, ARRANGEMENTS AND PLANS INDICATED OR REPRESENTED BY THIS DRAWING ARE OWNED BY, AND ARE THE PROPERTY OF CARRIER JOHNSON AND SHALL NOT BE USED BY OR DISCLOSED TO ANY PERSON, FIRM OR CORPORATION FOR ANY PURPOSE WHATSOEVER WITHOUT THE WRITTEN PERMISSION OF CARRIER JOHNSON. FILING THESE DRAWINGS OR SPECIFICATIONS WITH ANY PUBLIC AGENCY IS NOT A PUBLICATION OF SAME; NO COPYING, REPRODUCTION OR USE THEREOF IS PERMISSIBLE WITHOUT THE CONSENT OF CARRIER JOHNSON.

NOTE:

ALL MAINLINE IS LOCATED WITHIN 12 – 18 INCHES FROM INSIDE OF CURB FACE, UNLESS OTHERWISE NOTED

SITE SATELLITE CONTROLLER
PROVIDE TELEPHONE LINE TO CONTROLLER.
PROVIDE 120V CONNECTION FOR POWER

NOTE:
RCV's #4 & #37 REPLACE EXISTING VALVE ONLY

NOTE:
THE CONTRACTOR SHALL REPAIR ALL DAMAGE TO EXISTING PLANTING AND IRRIGATION AT NO ADDITIONAL COST WHICH ARE TO REMAIN AND BE PRESERVED IN PLACE TO THE SATISFACTION OF THE CITY OF ONTARIO AND THE LANDSCAPE ARCHITECT.

8 – GROUND WIRES
1 – COMMON WIRE
IN B.V. BOX FOR FUTURE USE.

3 – GROUND WIRE
1 – COMMON WIRES
IN B.V. BOX FOR FUTURE USE.

1½" RCV FOR FUTURE USE
WYE STRAINER FOR DRIP RCV

NOTE:
AS PART OF THIS CONTRACT, THE CONTRACTOR SHALL REPAIR ALL EXISTING IRRIGATION SYSTEMS THAT ARE TO REMAIN PROTECTED IN PLACE WITHIN THE CITY OF ONTARIO'S RIGHT-OF-WAY ADJACENT TO THE 60 FREEWAY.

TYP. 2' TYP. FROM SOUTHSIDE OF PANTIER DIAMOND
TYPICAL SLV. LAYOUT

There are two point of connections, (1) at the existing backflow device and (2) at the remote control valve #19 in the island just East of this location. Both POC tie into the existing mainline.

POC #1
POC #2
TIE INTO EXISTING MAINLINE
EXISTING BACKFLOW
POC #1 IS 145' EAST AND IS LOCATED ON THE SOUTH SIDE OF DRIVEWAY ENTRANCE.

NOTE:
CONTRACTOR TO REPLACE EXISTING IRRIGATION PIPING AND SPRINKLER HEADS AND RE-CONNECT TO EXISTING SYSTEM. MODIFY AS REQUIRED TO THE SATISFACTION OF THE CITY OF ONTARIO.

– CONTRACTOR SHALL CONNECT INTO EXISTING 2 1/2" MAINLINE FOR PROPOSED NEW IRRIGATION MAINLINE WHICH IS LOCATED APPROXIMATELY /– 275' WEST ADJACENT TO THE OLD FEDCO GUARD SHACK INCLUDING THE EXISTING CONTROLLER, BACKFLOW PREVENTER AND WATER METER.

RCV #19, REPLACED EXISTING RCV ONLY

NORTH
SCALE: 1" = 20'-0"

IRRIGATION LEGEND

SYMBOLS Q/T/H/F	DESCRIPTION	MFR.	MODEL NO.	PSI	GPM Q/T/H/F	R.
▽▽▽▽	POP–UP TURF SPRAY	RAINBIRD	1806–SAM–5–MPR–PCS	30	.10/.13/.2/.41	5'
▽▽▽▽	POP–UP TURF SPRAY	RAINBIRD	1806–SAM–8–MPR–PCS	30	.26/.35/.52/1.05	8'
▽▽▽▽	POP–UP TURF SPRAY	RAINBIRD	1806–SAM–10–MPR–PCS	30	.39/.53/.79/1.58	10'
▽▽▽▽	POP–UP TURF SPRAY	RAINBIRD	1806–SAM–U12–MPR–PCS	30	.65/.87/1.3/2.6	12'
▽▽▽▽	POP–UP TURF SPRAY	RAINBIRD	1806–SAM–U15–MPR–PCS	30	.92/1.23/1.85/3.7	15'
◓◓◓●	POP–UP SHRUB SPRAY	RAINBIRD	1812–SAM–5–MPR–PCS	30	.10/.13/.2/.41	5'
◓◓◓◎	POP–UP SHRUB SPRAY	RAINBIRD	1812–SAM–8–MPR–PCS	30	.26/.35/.52/1.05	8'
◓◓◓◎	POP–UP SHRUB SPRAY	RAINBIRD	1812–SAM–10–MPR–PCS	30	.39/.52/.79/1.58	10'
◓◓◓◎	POP–UP SHRUB SPRAY	RAINBIRD	1812–SAM–12–MPR–PCS	30	.65/.87/1.3/2.6	12'
◓◓◓◎	POP–UP SHRUB SPRAY	RAINBIRD	1812–SAM–15–MPR–PCS	30	.92/1.23/1.85/3.7	15'

SYMBOLS	DESCRIPTION	MFR.	MODEL NUMBER
C	SITE SATELITE IRRIGATION CONTROLLER	RAINBIRD	SA6–RB2–40/LPP/LFS200/RMLP
	ELEC. REMOTE CONTROL VALVE	RAINBIRD	PESB–PRS–D–W/NP–HAN
	PRESSURE REDUCING VALVE	GRISWALD	#2280
	STRAINER 30–MESH SCREEN	HAYWARD	#72–3" SIMPLEX W/ SS 80 MESH BASKET.
	BRASS MASTER VALVE	RAINBIRD	3" BPES–PRS–D–W/NP–HAN
	FLOW SENSOR	DATA INDUSTRIAL	FS200 SERIES W/CABLE #AEF9516–2SP IN A 1" CONDUIT TO CONTROLLER
PB	PULL BOX (FLOW SENSOR CABLE)		
	CLASS 200 PVC PURPLE LATERAL LINE		
	CLASS 315 PVC PURPLE MAINLINE 2" AND LARGER		
	SCH 40 PVC PURPLE MAINLINE 1 1/2" AND SMALLER		
	SCHEDULE 40 PVC SLEEVE & WIRE CONDUIT– TWICE DIA OF INSERT PIPE AND WIRE BUNDLES		

SYMBOLS Q/T/H/F	DESCRIPTION	MFR.	MODEL NO.	PSI	GPM Q/T/H/F	R.
•	PRESSURE COMPENSATING FULL CIRCLE BUBBLER ON POP–UP BODY	RAINBIRD	1404	30	1.0	1'–3'
•		RAINBIRD	1402	30	0.5	1'–3'
	BALL GATE VALVE 2" OR SMALLER	NIBCO	T–580–70–66 W/ SS BALL VALVE.			
	QUICK COUPLING	NELSON	7645 ACME THREAD W/ 7641 1" KEY & HORSE SEIVEL.			

STATION NUMBER
VALVE SIZE
APPROX GPM

NOTES:
– SEE SHEET L–300 FOR IRRIGATION NOTES
– ALL IRRIGATION SHALL CONFORM TO CITY OF ONTARIO STANDARDS & DESIGN CRITERIA WHETHER OR NOT MENTION HEREIN.
– OFFSITE LANDSCAPE AND IRRIGATION SHALL BE TO CITY OF ONTARIO STANDARDS.
– SITE SATELLITE CONTROLLER ASSEMBLY AVAILABLE THROUGH UNITED GREEN TECH. – (800) 427–0779 REPRESENTATIVE – DARYL GREEN.
– CONTRACTOR TO PROVIDE TELEPHONE LINE TO THE IRRIGATION CONTROLLER.
– ALL SPRINKLER HEADS SHALL HAVE PURPLE COVER.
– ADDITIONAL BUBBLERS HEADS WILL BE REQUIRED IF LARGER TREES ARE SELECTED PER ADD ALTERNATE # 5.

MAXIMUM APPLIED WATER ALLOWANCE

MAWA=(ETO)(0.8)(LA)(0.62)
=54.6 X 0.8 X 27,783 X 0.62
=752,408 GALLONS PER YEAR

WATER/USE	PLANT KEY	HYDROZONE	PLANT FACTOR
LOW	–	–	–
MEDIUM	ALL PLANTS	13,599 S.F.	13,599 X 0.5=6,799.5
HIGH	ALL TURF	14,184 S.F.	14,184 X 0.6=8,510.4
		27,783 S.F.	15,309.9 S.F.
AVERAGE PLANT FACTOR (APF)		15,309.9 / 27,783	= 0.55

ESTIMATED WATER USE

EWU=ETO(APF)(LA)(0.62)/IE
=54.6 X 0.55 X 27,783 X 0.62 / 0.75
=689,707 GALLONS PER YEAR

GENERAL NOTES FOR RECLAIMED WATER SYSTEM

1. PRIOR TO COMMENCING CONSTRUCTION THE CONTRACTOR SHALL NOTIFY THE CITY OF ONTARIO, CROSS–CONNECTION AND WATER POLLUTION CONTROL PROGRAM. THE CONTRACTOR SHALL ARRANGE FOR INSPECTION OF ALL RECLAIMED AND POTABLE WATER WORK.
2. NO EXCAVATION OR OPEN TRENCH MAY BE BACKFILLED WITHOUT FIRST SECURING HEALTH DEPARTMENT APPROVAL.
3. ALL RECLAIMED WATER VALVE AND OUTLETS SHALL BE CLEARLY IDENTIFIED "RECLAIMED WATER" IN BLACK LETTERS ON A PURPLE BACKGROUND
4. ALL POTABLE WATER VALVE BOXES AND/OR VAULTS SHALL BE CLEARLY IDENTIFIED "POTABLE WATER" ON A BLUE BACKGROUND
5. ALL RECLAIMED WATER LINES SHALL BE IDENTIFIED WITH THREE INCH (3") WIDE TAPE WITH AT LEAST ONE INCH (1") CONTINUOUS LETTERING "CAUTION RECLAIMED WATER", PURPLE WITH BLACK LETTERING. THE TAPE IS TO BE ATTACHED TO THE TOP OF ALL PIPE. IDENTIFICATION TAPE SHALL EXTEND INTO ALL VALVE BOXES AND/OR VAULTS.

   IDENTIFICATION TAPE IS NOT NECESSARY FOR EXTRUDED PURPLE COLORED PVC WITH THE CONTINUOUS BLACK MARKINGS "CAUTION RECLAIMED WATER."
6. ALL POTABLE WATER LINES SHALL BE IDENTIFIED WITH THREE INCH (3") WIDE TAPE WITH AT LEAST ONE INCH (1") CONTINUOUS LETTERING "POTABLE WATER", BLUE WITH WHITE LETTERING. THE TAPE IS TO BE ATTACHED TO THE TOP OF ALL PIPE. IDENTIFICATION TAPE SHALL EXTEND INTO ALL VALVE BOXES AND/OR VAULTS.

   IDENTIFICATION TAPE IS NOT NECESSARY FOR EXTRUDED COLORED PVC WITH THE CONTINUOUS BLUE MARKINGS "POTABLE WATER".
7. SEPARATION CRITERIA FOR DOMESTIC AND RECLAIMED WATER TRANSMISSION AND DISTRIBUTION SYSTEM:
   A. PARALLEL CONSTRUCTION: TEN FEET (10'), ALL DISTANCES MEASURED FORM PIPELINE OUTSIDE DIAMETERS.
   B. CROSS–OVER CONSTRUCTION: AS PERPENDICULAR AS POSSIBLE; ONE FOOT (1') VERTICAL SEPARATION, WITH POTABLE ABOVE RECLAIMED; FULL PIPE LENGTH CENTERED OVER CROSS–OVER.
   C. ALTERNATE CROSS–OVER CONSTRUCTION: EITHER THE POTABLE OR RECLAIMED WATER LINES MAY BE SLEEVED WITH THE SAME CLASS PIPING FOR ONE FULL PIPE LENGTH (MINIMUM TEN FEET) CENTERED OVER THE CROSS–OVER.
   D. POTABLE AND RECLAIMED WATER LINES MAY NOT BE LAID IN A COMMON TRENCH.
   E. THE RECLAIMED WATER SYSTEM IS TO BE CONSTRUCTED IN CONFORMANCE WITH POTABLE WATER SYSTEM CONSTRUCTION STANDARDS.
   F. INSTALLATION OF HOSE BIBS ON ANY RECLAIMED WATER IRRIGATION SYSTEM SHALL NOT BE PERMITTED.
   G. ALL RECLAIMED WATER COMPONENTS SHALL BE TAGGED AS RECLAIMED WATER.
   H. CONTRACTOR TO SUPPLY AND ADD FSV–200 (FLOW SENSING AND MASTER VALVE ASSEMBLY) PER CITY OF ONTARIO STANDARD DETAILS.

CARRIER JOHNSON
ARCHITECTURE
INTERIOR DESIGN
PLANNING
GORDON R. CARRIER AIA
MICHAEL C. JOHNSON AIA
WILLIAM C. BOCKEN AIA
DEBORAH P. ELLIOTT IIDA
2600 MICHELSON DRIVE SUITE 400 IRVINE, CALIFORNIA 92612
TEL 949 955-2353 FAX 949 955-2377
1301 THIRD AVENUE SAN DIEGO, CALIFORNIA 92101
TEL 619 239-2353 FAX 619 239-5227

LANDSCAPE INSTALLATION CONTRACTOR:
NIDORI LANDSCAPE INC.
714.751.8792

ima design
2500 michelson dr
suite 125
irvine ca 92612
949.250.0023
949.250.0043 f

ONTARIO PD:::
HEADQUARTERS
2534 S. ARCHIBALD AVE., ONTARIO, CALIFORNIA 91761
AS-BUILT SET

REGISTERED LANDSCAPE ARCHITECT
ANTHONY WASHINGTON
NO. 2499
SIGNATURE
RENEWAL DATE
STATE OF CALIFORNIA

5 Addendum 5 04.21.2003
3 Addendum 3
2 Addendum 2/Bldg. Dept. Re-Submittal 03.20.2003
Building Dept. Submittal 02.24.2003
ISSUES:

DIRECTORY/FILE NUMBER: 461-A812
XREF'S DRAWING:
PROJECT NUMBER: 461.00
DRAWN BY: CHECKED BY:
DATE: 3/30/03
SCALE: AS NOTED
TITLE:
IRRIGATION PLAN
AS-BUILT SET
03-31-04
KEVIN HEGLE
DRAWING NO:
L-200

5

AS-BUILT

THIS PROJECT, NONE OF SUCH IDEAS, DESIGN, ARRANGEMENTS, OR PLANS SHALL BE USED, BY, OR DISCLOSED TO ANY PERSON, FIRM, OR CORPORATION, FOR ANY PURPOSE WHATSOEVER WITHOUT THE WRITTEN PERMISSION OF CARRIER JOHNSON. FILING THESE DRAWINGS OR SPECIFICATIONS WITH ANY PUBLIC AGENCY IS NOT A PUBLICATION OF SAME. NO COPYING, REPRODUCTION OR USE THEREOF IS PERMISSIBLE WITHOUT THE CONSENT OF CARRIER JOHNSON.

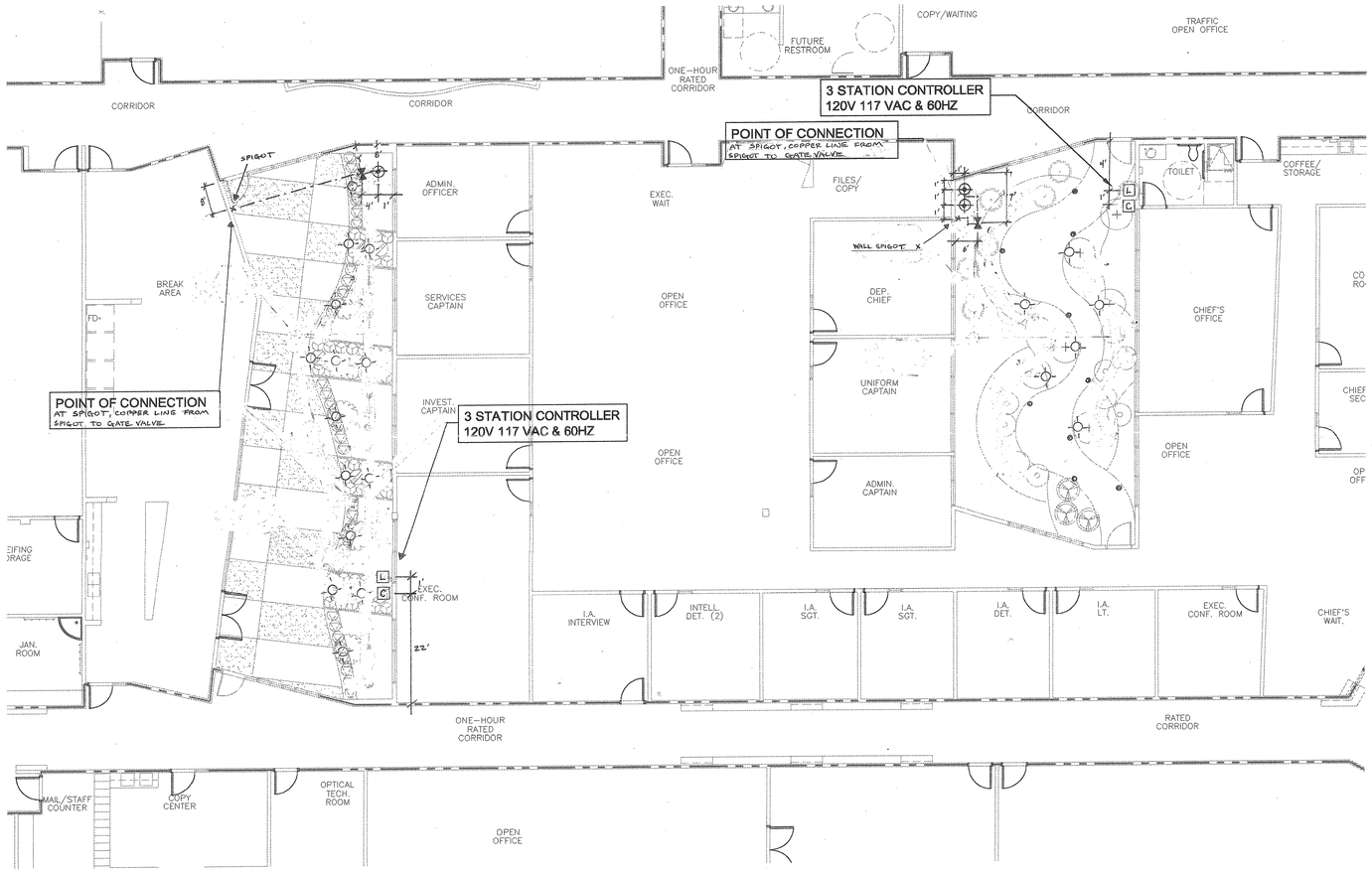

IRRIGATION LEGEND

SYMBOLS	DESCRIPTION	MFR.	MODEL NO.
	ON-SURFACE NON-PRESSURE COMPENSATING DRIPPERLINE	NETAFIM	TL7-10-18
	ZONE CONTROL KIT	RAINBIRD	XACZ-075
C	WALL-MOUNT IRRIGATION CONTROLLER	RAINBIRD	E-3-3STA
P.O.C.	1-1/4" P.O.C.(WATER SOURCE) POTABLE WATER.		
	CLASS 200 PVC LATERAL LINE		
	SCH 40 PVC MAINLINE 1-1/4"		
	GATE VALVE (NIBCO T113)		
L	TRANSFORMER (MALIBU LIGHTING 900 W)		
	MALIBU LIGHTING PATH LIGHTS 20 W, FLOOD LIGHTS 35 W		

APPROX GPM
STATION NUMBER
VALVE SIZE
APPROX GPH

EMITTER SCHEDULE TABLE

PLANT SIZE	EMITTER DEVICE	FLOW/ OUTLET	OUTLET PER PLAN
24" BOX	XBD-80 (8) MULTI-OUTLET W/ DC-025 & PC-10	20 GPH	2
15 GAL	XBD-80 (8) MULTI-OUTLET W/ DC-025 & PC-10	20 GPH	2
5 GAL	XBD-80 (8) MULTI-OUTLET W/ DC-025 & PC-10	10 GPH	1
1 GAL	XBD-80 (8) MULTI-OUTLET W/ DC-025 & PC-10	10 GPH	1

PIPE SIZING FOR DRIP IRRIGATION

PIPE SIZE	GPM	GPH
1/2"	0-5	0-300
3/4"	6-9	360-540
1"	10-15	600-900
1-1/4"	16-24	960-1440

NORTH

0 4 8 16 32
SCALE: 1" = 8'-0"

CARRIER JOHNSON
ARCHITECTURE
INTERIOR DESIGN
PLANNING
GORDON R. CARRIER AIA
MICHAEL C. JOHNSON AIA
WILLIAM C. BOCKEN AIA
DEBORAH P. ELLIOTT IIDA
2600 MICHELSON DRIVE SUITE 400 IRVINE, CALIFORNIA 92612
TEL 949 955-2353 FAX 949 955-2377
1301 THIRD AVENUE SAN DIEGO, CALIFORNIA 92101
TEL 619 239-2353 FAX 619 239-4227
ima design
2500 michelson dr
suite 125
irvine ca 92612
949.250.0023
949.250.0043 f

ONTARIO PD..
HEADQUARTERS
2534 S. ARCHIBALD AVE., ONTARIO, CALIFORNIA 91761

REGISTERED LANDSCAPE ARCHITECT
ANN C. KRAKHARD LANDSCAPE ARCHITECT INC. NO. 2558
SIGNATURE
RENEWAL DATE
DATE
STATE OF CALIFORNIA

5 Addendum 5 04.21.2006
3 Addendum 3
2 Addendum 2/Bldg. Dept. Re-Submittal 03.20.2003
Building Dept. Submittal 02.24.2003
ISSUES:

DIRECTORY/FILE NUMBER: 4511-A312
XREF'S DRAWINGS:
PROJECT NUMBER: 4511.00
DRAWN BY: CH
CHECKED BY:
DATE:
SCALE: AS NOTED
TITLE: IRRIGATION PLAN AT COURTYARD
AS BUILT SET 03-31-04
DRAWING NO: L-201
AS BUILT

ALL IDEAS, DESIGN, ARRANGEMENTS AND PLANS INDICATED OR REPRESENTED BY THIS DRAWING ARE OWNED BY, AND THE PROPERTY OF CARRIER JOHNSON AND WERE CREATED, EVOLVED AND DEVELOPED FOR USE ON, AND IN CONNECTION WITH THIS PROJECT. NONE OF SUCH IDEAS, DESIGN, ARRANGEMENTS OR PLANS SHALL BE USED BY, OR DISCLOSED TO, ANY PERSON, FIRM, OR CORPORATION FOR ANY PURPOSE WHATSOEVER WITHOUT THE WRITTEN PERMISSION OF CARRIER JOHNSON. FILING THESE DRAWINGS OR SPECIFICATIONS WITH ANY PUBLIC AGENCY IS NOT A PUBLICATION OF SAME. NO COPYING, REPRODUCTION OR USE THEREOF IS POSSIBLE WITHOUT THE CONSENT OF CARRIER JOHNSON.

5

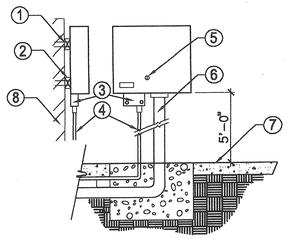

LEGEND

1. SECURE TO WALL WITH LAG OR WOOD SCREWS
2. 1" X REDWOOD BLOCKING
3. JUNCTION BOX
4. 120 VOLT ELECTRIC CONDUIT AND SERVICE BY ELECTRIC CONTRACTOR. FINAL HOOK UP BY IRRIGATION CONTRACTOR
5. KEY LOCKS
6. PVC CONDUIT TO CONCEAL LOW VOLTAGE WIRING WHERE EXPOSED ABOVE GRADE
7. FINISH SURFACE
8. WALL

NOTE: ALL WIRING TO BE INSTALLED PER LOCATION CODE.

AUTO.CONTROLLER (WALL MOUNTED) 10

Scale: N.T.S. I-CONT(WALL) L-300

United Green Tech Drawing

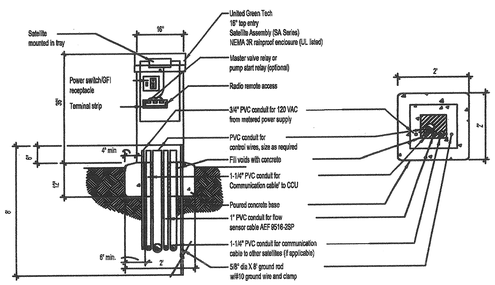

16"X16" SATELITE ASSEMBLY 7

Scale: N.T.S. N.T.S. L-300

CITY of ONTARIO STANDARD DRAWING

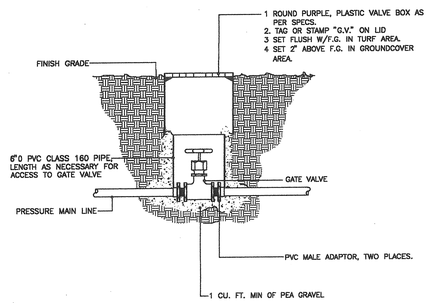

GATE VALVE 4

Scale: N.T.S. N.T.S. L-300

CITY of ONTARIO STANDARD DRAWING

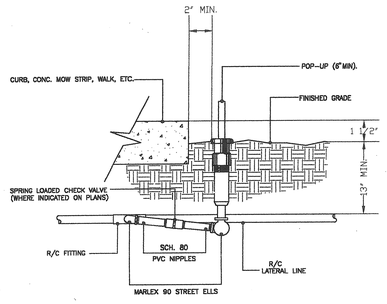

POP-UP HEAD ASSEMBLY 1

Scale: N.T.S. N.T.S. L-300

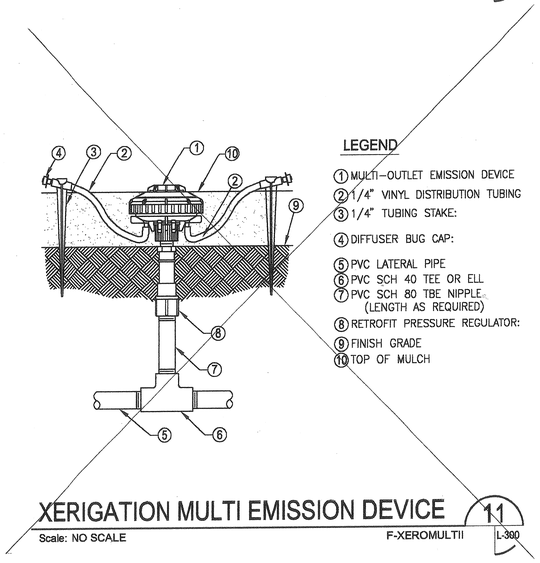

LEGEND

1. MULTI-OUTLET EMISSION DEVICE
2. 1/4" VINYL DISTRIBUTION TUBING
3. 1/4" TUBING STAKE:
4. DIFFUSER BUG CAP:
5. PVC LATERAL PIPE
6. PVC SCH 40 TEE OR ELL
7. PVC SCH 80 TBE NIPPLE. (LENGTH AS REQUIRED)
8. RETROFIT PRESSURE REGULATOR:
9. FINISH GRADE
10. TOP OF MULCH

XERIGATION MULTI EMISSION DEVICE 11

Scale: NO SCALE F-XEROMULTII L-300

United Green Tech Drawing

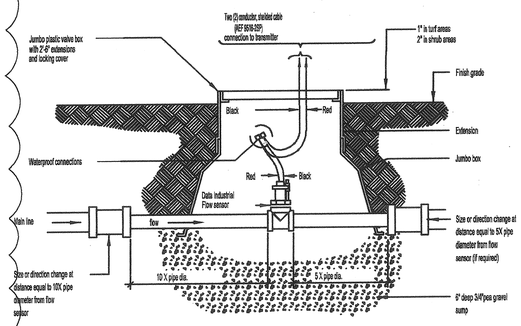

FLOW SENSOR 8

Scale: N.T.S. N.T.S. L-300

CITY of ONTARIO STANDARD DRAWING

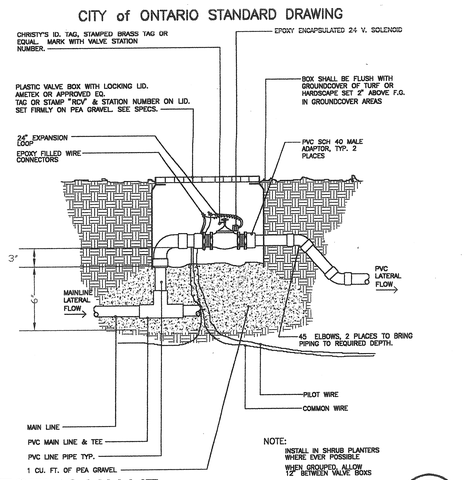

ELECTRIC VALVE 5

Scale: N.T.S. N.T.S. L-300

CITY of ONTARIO STANDARD DRAWING

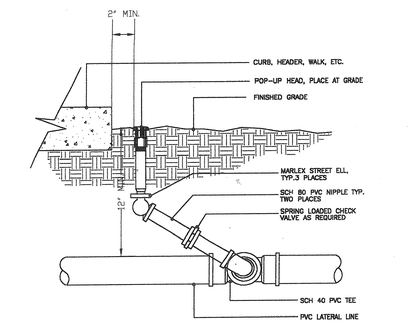

POP-HEAD PLACEMENT 2

Scale: N.T.S. N.T.S. L-300

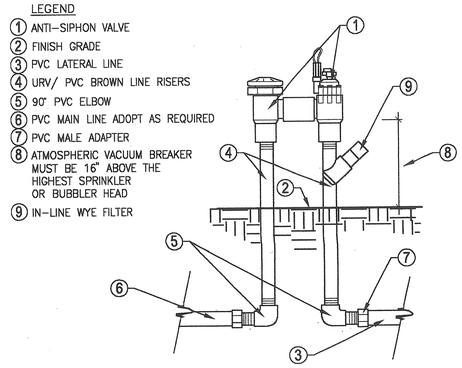

LEGEND

1. ANTI-SIPHON VALVE
2. FINISH GRADE
3. PVC LATERAL LINE
4. URV/ PVC BROWN LINE RISERS
5. 90° PVC ELBOW
6. PVC MAIN LINE ADOPT AS REQUIRED
7. PVC MALE ADAPTER
8. ATMOSPHERIC VACUUM BREAKER MUST BE 16" ABOVE THE HIGHEST SPRINKLER OR BUBBLER HEAD
9. IN-LINE WYE FILTER

ZONE CONTROL KIT /ANTI-SIPHON

Scale: N.T.S. I-ANT_RCV,DWG

IRRIGATION NOTES

1. DRAWINGS ARE DIAGRAMATIC. EQUIPMENT SHOWN IN PAVED AREAS ARE FOR DESIGN CLARIFICATION ONLY AND SHALL BE INSTALLED WITHIN PLANTED AREAS.
2. DO NOT WILLFULLY INSTALL THE SYSTEM AS DESIGNED WHEN IT IS OBVIOUS IN THE FIELD THAT UNKNOWN OBSTRUCTIONS OR GRADE DIFFERENCES EXIST THAT WERE NOT KNOWN DURING DESIGNING. SUCH CONDITIONS SHALL BE BROUGHT TO THE ATTENTION OF THE OWNER'S AUTHORIZED REPRESENTATIVE, OTHERWISE THE IRRIGATION CONTRACTOR MUST ASSUME FULL RESPONSIBILITY FOR ANY AND ALL NECESSARY REVISIONS.
3. SYSTEM DESIGN IS BASED ON MINIMUM OPERATING PRESSURE OF 80 PSI AT EACH POINT OF CONNECTION. IRRIGATION CONTRACTOR SHALL VERIFY ALL PRESSURE ON SITE PRIOR TO CONSTRUCTION.
4. INSTALL ALL MATERIAL IN ACCORDANCE WITH APPLICABLE CODES AND ORDINANCES, DETAILS, AND SPECIFICATIONS.
5. INSTALL ELECTRICAL HOOK-UP FOR CONTROLLER, INSTALL NO. 14 UF DIRECT BURIAL IRRIGATION WIRE (WHITE COMMON, DIFFERENT COLOR PILOT FOR EACH CONTROLLER) USE EPOXY CONNECTORS AND BURY WIRE A MINIMUM OF EIGHTEEN (18) INCHES IN DEPTH, BUNDLED AND TAPED TOGETHER EVERY TEN (10) FEET. FORM EXPANSION COILS AT EACH VALVE AND CHANGE OF DIRECTION. INSTALL WIRING IN PVC SCH 40 SLEEVES UNDER PAVING.
6. PRESSURE MAINLINES FOR THREE (3) INCHES AND LARGER SHALL BE PVC CLASS 315 PVC PIPE. PRESSURE MAINLINE LESS THAN TWO (2) INCHES SHALL BE PVC SCHEDULE 40 PIPE.
7. NON PRESSURE LATERALS SHALL BE PVC CLASS 200 WITH SCHEDULE 40 FITTINGS.
8. ALL PIPE UNDER PAVED AREAS TO BE PVC SCHEDULE 40 SLEEVE INSTALLED PRIOR TO PAVING.
9. FLUSH ALL LINES AND ADJUST ALL HEADS FOR MAXIMUM PERFORMANCE AND TO PREVENT OVERSPRAY ONTO WALKS, DRIVES, AND BUILDINGS AS MUCH AS POSSIBLE. THIS SHALL INCLUDE SELECTING THE BEST DEGREE OF ARC TO FIT EXISTING SITE CONDITIONS.
10. GATE VALVES SHALL BE LINE SIZED AND LOCATED IN PLASTIC VALVE BOXES.
11. CONTROL VALVES SHALL BE SIZED AS NOTED ON DRAWINGS AND LOCATED IN PLASTIC VALVE BOXES WITH RAINBIRD VALVE MARKERS PAINTED GREEN.
12. ALL ABOVE GROUND IRRIGATION EQUIPMENT SHALL BE SCREENED WITH PLANT MATERIAL.

IRRIGATION NOTES 9

Scale: N.T.S. N.T.S. L-300

CITY of ONTARIO STANDARD DRAWING

SECTION

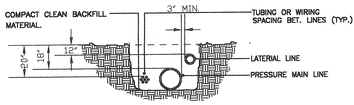

PLANVIEW





NOTE

1. UNDER PAVED AREAS ALL LINES & WIRES SHALL BE SLEEVED W/ SCHED. 40 PVC PIPE.
2. INSTALL AT DEPTH OF 24"
3. BACKFILL W/6" SAND BELOW AND 3" SAND ABOVE.
4. PROVIDE 95% COMPACTION BY MECHANICAL TAMPING DEVICES.

PIPE & WIRE SECTION 6

Scale: N.T.S. N.T.S. L-300

CITY of ONTARIO STANDARD DRAWING

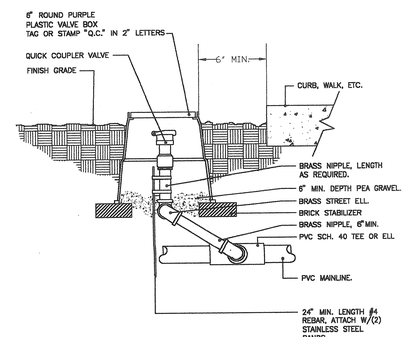

QUICK-COUPLER VALVE 3

Scale: N.T.S. N.T.S. L-300

CARRIER JOHNSON

ARCHITECTURE
INTERIOR DESIGN
PLANNING

GORDON R. CARRIER AIA
MICHAEL C. JOHNSON AIA

WILLIAM C. BOCKEN AIA
DEBORAH P. ELLIOTT IIDA

2600 MICHELSON DRIVE
SUITE 400
IRVINE, CALIFORNIA
92612
TEL 949 955-2353
FAX 949 955-2377

1301 THIRD AVENUE
SAN DIEGO, CALIFORNIA
92101
TEL 619 239-2353
FAX 619 239-0227

imadesign
2500 michelson dr
suite 125
irvine ca 92612
949.250.0023
949.250.0043 f

ONTARIO PD:..
HEADQUARTERS
2534 S. ARCHIBALD AVE., ONTARIO, CALIFORNIA 91761

REGISTERED LANDSCAPE ARCHITECT
MR. TIMOTHY SCHEIDT
LIC. NO. 2499
SIGNATURE
RENEWAL DATE
DATE
STATE OF CALIFORNIA

5 Addendum 5 04.21.2003
3 Addendum 3
2 Addendum 2/Bldg. Dept. Re-Submittal 03.20.2003
Building Dept. Submittal 02.24.2003
ISSUES:

DIRECTORY/FILE NUMBER: 4511-AS2
XREF'S DRAWINGS:
PROJECT NUMBER: 451100
DRAWN BY: CHECKED BY:
DATE: 9/20/03
SCALE: AS NOTED
TITLE: IRRIGATION DETAILS

DRAWING NO: L-300

AS-BUILT

ALL IDEAS, DESIGN, ARRANGEMENTS AND PLANS INDICATED OR REPRESENTED BY THIS DRAWING ARE OWNED BY, AND THE PROPERTY OF CARRIER JOHNSON AND WERE CREATED, EVOLVED AND DEVELOPED FOR USE ON, AND IN CONNECTION WITH THIS PROJECT. NONE OF SUCH IDEAS, DESIGN, ARRANGEMENTS, OR PLANS SHALL BE USED BY, OR DISCLOSED TO ANY PERSON, FIRM, OR CORPORATION FOR ANY PURPOSE WHATSOEVER WITHOUT THE WRITTEN PERMISSION OF CARRIER JOHNSON. FILING THESE DRAWINGS OR SPECIFICATIONS WITH ANY PUBLIC AGENCY IS NOT A PUBLICATION OF SAME. NO COPYING, REPRODUCTION OR USE THEREOF PERMISSIBLE WITHOUT THE CONSENT OF CARRIER JOHNSON.

TREE LEGEND

SYMBOLS	BOTANICAL NAME	COMMON NAME	SIZE	SPACING	QTY.	REMARKS
CHO SPE	Chorisia s. 'Majestic Beauty'	Floss Silk Tree	24" Box (36" Box)	Per Plan	–	–
CIN CAM	Cinnamomum camphora	Camphor Tree	24" Box (36" Box)	40'o.c.	–	–
JAC MIM	Jacaranda mimosifolia	Jacaranda	36" Box (48" Box)	Per Plan	–	Multi–Stem
KOE BIP	Koelreuteria bipinnata	Chinese Flame Tree	24" Box (36" Box)	Per Plan	–	Multi–Stem
MAG GRA	Magnolia grandiflora	Southern Magnolia	36" Box (48" Box)	Per Plan	–	Low–Branched
POD GRA	Podocarpus gracilior	Fern Pine	15 Gal. (24" Box)	15'o.c.	–	–
CHI TAS	Chitalpa tashkentensis	Violet Chitalpa	15 Gal. (24" Box)	Per Plan	–	Multi–Stem
SCH MOL	Schinus molle	California Pepper	36" Box (48" Box)	Per Plan	–	Multi–Stem
TRI CON	Tristania conferta	Brisbane Box	15 Gal. (24" Box)	Per Plan	–	–
WAS ROB	Washingtonia robusta	Mexican Fan Palm	25–35' BTH	40'o.c.	–	–

NOTE:

CONTRACTOR SHALL REPAIR ALL DAMAGE TO EXISTING PLANTING WHICH ARE TO REMAIN AND BE PRESERVED IN PLACE TO THE SATISFACTION OF THE CITY OF ONTARIO AND THE LANDSCAPE ARCHITECT.

SIZE SHOWN IN ( ) ARE INCREASED SIZES PER ADD ALTERNATE #5.

NORTH

0 10 20 40 80

SCALE: 1" = 20'-0"

AS-BUILT

CARRIER JOHNSON

ARCHITECTURE
INTERIOR DESIGN
PLANNING

GORDON R. CARRIER AIA
MICHAEL C. JOHNSON AIA

WILLIAM C. BOCKEN AIA
DEBORAH P. ELLIOTT IIDA

2600 MICHELSON DRIVE
SUITE 400
IRVINE, CALIFORNIA
92612

TEL 949 955-2353
FAX 949 955-2377

1301 THIRD AVENUE
SAN DIEGO, CALIFORNIA
92101

TEL 619 239-2353
FAX 619 239-2227

ima design
2500 michelson dr
suite 125
irvine ca 92612
949.250.0023
949.250.0043 f

ONTARIO PD::
HEADQUARTERS
2534 S. ARCHIBALD AVE., ONTARIO, CALIFORNIA 91761

REGISTERED LANDSCAPE ARCHITECT
DAVID A. YAKSHITI
No. 4913
STATE OF CALIFORNIA

2 Addendum 2/Bldg. Dept. Re-Submittal 03.20.2003
Building Dept. Submittal 02.24.2003
ISSUES:

DIRECTORY/FILE NUMBER: 4511-A512

XREF'S DRAWINGS:

PROJECT NUMBER: 4511.00

DRAWN BY: CHECKED BY:

DATE: 9/20/02

SCALE: AS NOTED

TITLE: TREE PLANTING PLAN

DRAWING NO: L-400

THESE DRAWINGS AND SPECIFICATIONS AND THE IDEAS, DESIGN, ARRANGEMENTS, OR PLANS SHALL BE USED BY, OR DISCLOSED TO ANY PERSON, FIRM, OR CORPORATION FOR ANY PURPOSE WHATSOEVER WITHOUT THE WRITTEN PERMISSION OF CARRIER JOHNSON. NO COPYING, REPRODUCTION OR USE THEREOF IS PERMISSIBLE WITHOUT THE CONSENT OF CARRIER JOHNSON.
THE USE WITH THIS PROJECT. NONE OF SUCH IDEAS, DESIGN, ARRANGEMENTS, OR PLANS SHALL BE USED BY, OR DISCLOSED TO ANY PERSON, FIRM, OR CORPORATION FOR ANY PURPOSE WHATSOEVER WITHOUT THE WRITTEN PERMISSION OF CARRIER JOHNSON. FILING THESE DRAWINGS OR SPECIFICATIONS WITH ANY PUBLIC AGENCY IS NOT A PUBLICATION OF SAME. NO COPYING, REPRODUCTION OR USE THEREOF IS PERMISSIBLE WITHOUT THE CONSENT OF CARRIER JOHNSON.

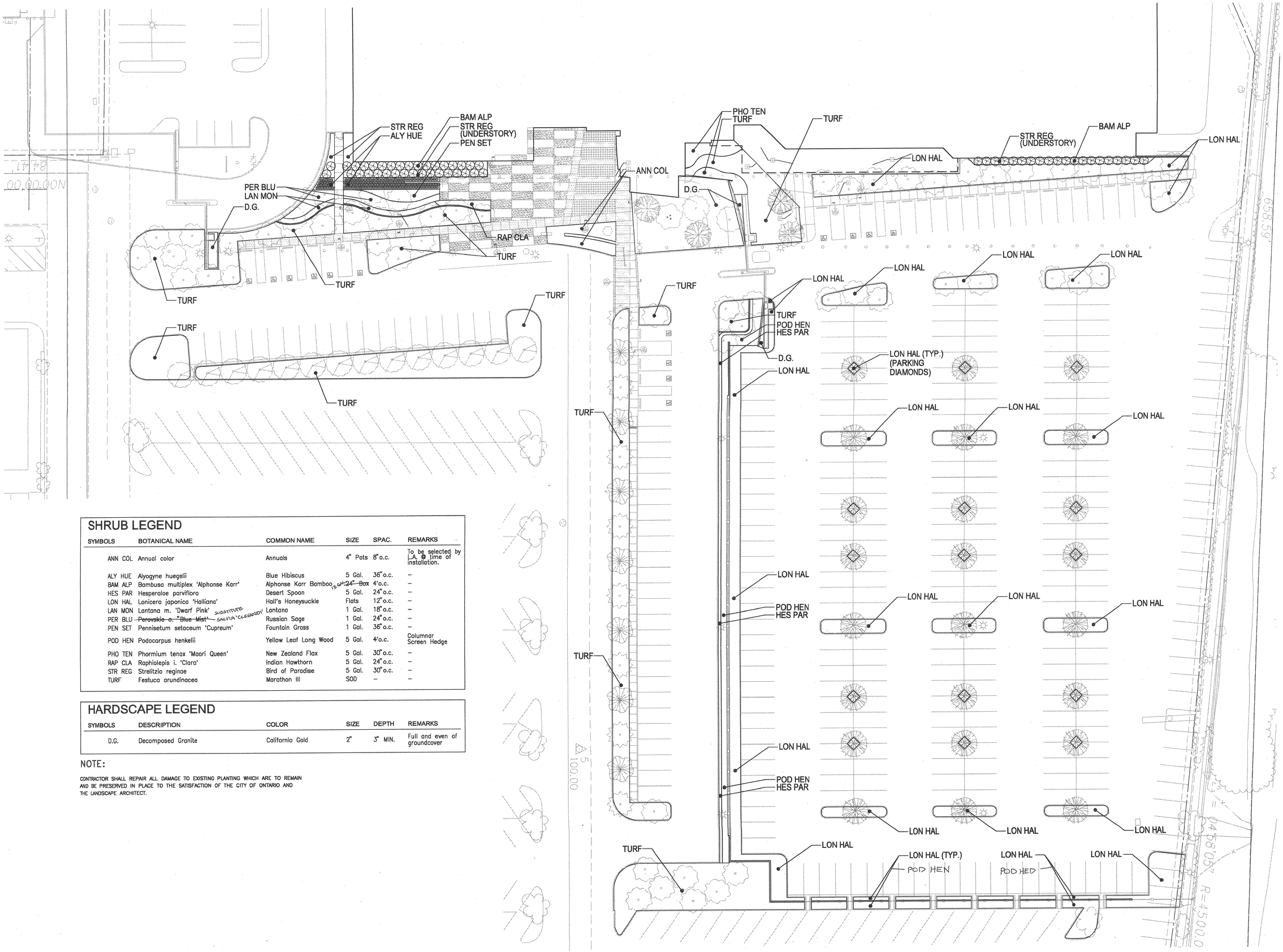

SHRUB LEGEND

SYMBOLS	BOTANICAL NAME	COMMON NAME	SIZE	SPAC.	REMARKS
ANN COL	Annual color	Annuals	4" Pots	8" o.c.	To be selected by L.A. @ time of installation.
ALY HUE	Alyogyne huegelii	Blue Hibiscus	5 Gal.	36" o.c.	–
BAM ALP	Bambusa multiplex 'Alphonse Karr'	Alphonse Karr Bamboo	~~15 Gal.~~ ~~24" Box~~	4' o.c.	–
HES PAR	Hesperaloe parviflora	Desert Spoon	5 Gal.	24" o.c.	–
LON HAL	Lonicera japonica 'Halliana'	Hall's Honeysuckle	Flats	12" o.c.	–
LAN MON	Lantana m. 'Dwarf Pink' SUBSTITUTE	Lantana	1 Gal.	18" o.c.	–
PER BLU	~~Perovskia a. "Blue Mist"~~ SALVIA CLEVANDII	Russian Sage	1 Gal.	24" o.c.	–
PEN SET	Pennisetum setaceum 'Cupreum'	Fountain Grass	1 Gal.	36" o.c.	–
POD HEN	Podocarpus henkelii	Yellow Leaf Long Wood	5 Gal.	4' o.c.	Columnar Screen Hedge
PHO TEN	Phormium tenax 'Maori Queen'	New Zealand Flax	5 Gal.	30" o.c.	–
RAP CLA	Raphiolepis i. 'Clara'	Indian Hawthorn	5 Gal.	24" o.c.	–
STR REG	Strelitzia reginae	Bird of Paradise	5 Gal.	30" o.c.	–
TURF	Festuca arundinacea	Marathon III	SOD	–	–

HARDSCAPE LEGEND

SYMBOLS	DESCRIPTION	COLOR	SIZE	DEPTH	REMARKS
D.G.	Decomposed Granite	California Gold	2"	3" MIN.	Full and even of groundcover

NOTE:

CONTRACTOR SHALL REPAIR ALL DAMAGE TO EXISTING PLANTING WHICH ARE TO REMAIN AND BE PRESERVED IN PLACE TO THE SATISFACTION OF THE CITY OF ONTARIO AND THE LANDSCAPE ARCHITECT.

NORTH

0 10 20 40 80

SCALE: 1" = 20'-0"

CARRIER JOHNSON
ARCHITECTURE
INTERIOR DESIGN
PLANNING
GORDON R. CARRIER AIA
MICHAEL C. JOHNSON AIA
WILLIAM C. BOCKEN AIA
DEBORAH P. ELLIOTT IIDA
2600 MICHELSON DRIVE
SUITE 400
IRVINE, CALIFORNIA
92612
TEL 949 955-2353
FAX 949 955-2377
1301 THIRD AVENUE
SAN DIEGO, CALIFORNIA
92101
TEL 619 239-2353
FAX 619 239-2227

ima design
2500 michelson dr
suite 125
irvine ca 92612
949.250.0023
949.250.0043 f

ONTARIO PD::
HEADQUARTERS
2534 S. ARCHIBALD AVE., ONTARIO, CALIFORNIA 91761

REGISTERED LANDSCAPE ARCHITECT
ARIF M. MASHTOUB
No. 3447
STATE OF CALIFORNIA

Addendum 2/Bldg. Dept. Re-Submittal 03.20.2003
Building Dept. Submittal 02.24.2003
ISSUES:

DIRECTORY/FILE NUMBER: 461-A812

XREF'S DRAWINGS:

PROJECT NUMBER: 461L00
DRAWN BY: CHECKED BY:

DATE: 9/20/02
SCALE: AS NOTED

TITLE:
SHRUB PLANTING PLAN

DRAWING NO:
L-401

AS-BUILT

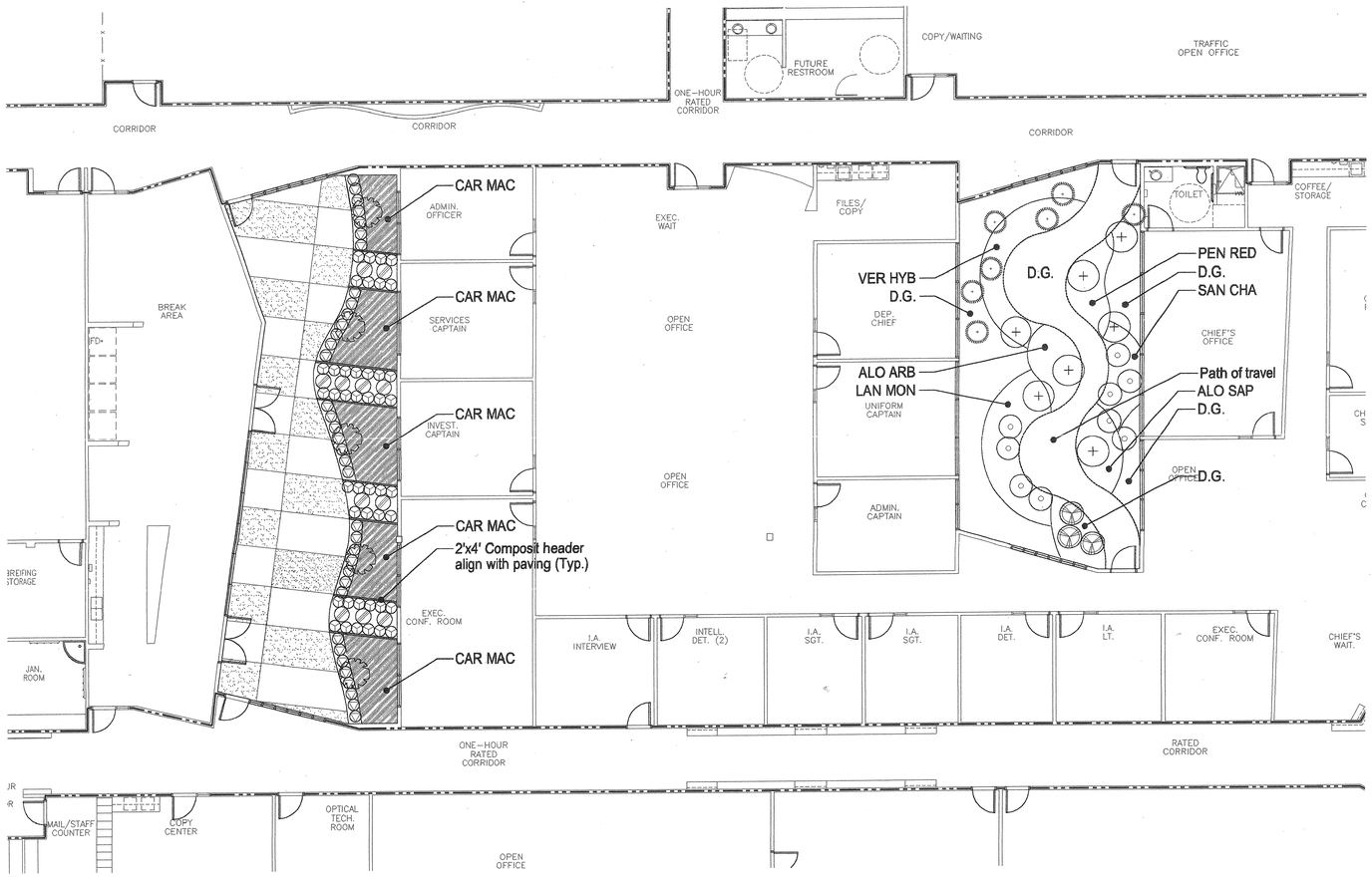

SHRUB LEGEND (COURTYARD)

SYMBOLS	BOTANICAL NAME	COMMON NAME	SIZE	SPAC.	REMARKS
AGA ATT	Agave attenuata	Agave	15 Gal.	–	–
ALO ARB	Aloe arborescens	Tree Aloe	5 Gal.	24" O.C.	
ALO SAP	Aloe saponaria	–	5 Gal.	18" O.C.	–
BAM MUL	Bambusa multiplex 'Golden Goddess'	Golden Goddess Bamboo	15 Gal.	–	–
CAR MAC	Carissa macrocarpa 'Horizontalis'	Natal Plum	5 Gal.	24" O.C.	–
FES OVI	Festuca ovina 'Glauca'	Common Blue Fescue	1 Gal.	–	–
HEM HYB	Hemerocallis hybrids 'Purple'	Daylily	5 Gal.	–	–
JUN CHI	Juniperus chinensis 'Torulosa'	Hollywood Juniper	24" Box	–	–
LAN MON	Lantana montevidensis 'Confetti'	Lantana	1 Gal.	18" O.C.	–
MYR COM	Myrtus communis 'Compacta'	Dwarf Myrtus	5 Gal.	18" O.C.	–
PEN RED	Penstemon 'Hybrid Red'	–	1 Gal.	18" O.C.	–
PHO TEN	Phormium tenax 'Tom Thumb'	New Zealand Flax	5 Gal.	18" O.C.	–
SAN CHA	Santolina chamaecyparissus	Lavender Cotton	1 Gal.	18" O.C.	–
STR NIC	Strelitzia nicolai	Giant Bird Of Paradise	24" Box	–	–
VER HYB	Verbena Hybrida 'Purple'	Garden Verbena	1 Gal.	12" O.C.	–

HARDSCAPE LEGEND (COURTYARD)

SYMBOLS	DESCRIPTION	COLOR	SIZE	DEPTH	REMARKS
D.G.	Decomposed Granite Mulch	California Gold	3/8" to 1/2"	3" MIN.	–

NORTH

0 4 8 16 32

SCALE: 1" = 8'-0"

ALL IDEAS, DESIGN, ARRANGEMENTS, OR PLANS SHALL BE USED BY, OR DISCLOSED TO ANY PERSON, FIRM, OR CORPORATION FOR ANY PURPOSE WHATSOEVER WITHOUT THE WRITTEN PERMISSION OF CARRIER JOHNSON. NONE OF SUCH IDEAS, DESIGN, ARRANGEMENTS, OR PLANS SHALL BE USED BY, OR DISCLOSED TO ANY PERSON, FIRM, OR CORPORATION FOR ANY PURPOSE WHATSOEVER WITHOUT THE WRITTEN PERMISSION OF CARRIER JOHNSON. FILING THESE DRAWINGS OR SPECIFICATIONS WITH ANY PUBLIC AGENCY IS NOT A PUBLICATION OF SAME. NO COPYING, REPRODUCTION OR USE THEREOF IS PERMISSIBLE WITHOUT THE CONSENT OF CARRIER JOHNSON.

CARRIER JOHNSON

ARCHITECTURE
INTERIOR DESIGN
PLANNING

GORDON R. CARRIER AIA
MICHAEL C. JOHNSON AIA

WILLIAM C. BOCKEN AIA
DEBORAH P. ELLIOTT IIDA

2600 MICHELSON DRIVE
SUITE 400
IRVINE, CALIFORNIA
92612

TEL 949 955-2353
FAX 949 955-2377

1301 THIRD AVENUE
SAN DIEGO, CALIFORNIA
92101

TEL 619 239-2353
FAX 619 239-5227

imadesign
2500 michelson dr
suite 125
irvine ca 92612
949.250.0023
949.250.0043 f

ONTARIO PD::
HEADQUARTERS
2534 S. ARCHIBALD AVE., ONTARIO, CALIFORNIA 91761

REGISTERED LANDSCAPE ARCHITECT
ANN THRASHER GUTHRIE
P.L.A. NO. 2989
SIGNATURE
RENEWAL DATE
DATE
STATE OF CALIFORNIA

5 Addendum 5 04.21.2003
3 Addendum 3
2 Addendum 2/Bldg. Dept Re-Submittal 03.20.2003
Building Dept. Submittal 02.24.2003
ISSUES:

DIRECTORY/FILE NUMBER: 4511-A912

XREF'S DRAWINGS:

PROJECT NUMBER: 4511.00
DRAWN BY: CHECKED BY:

DATE:

SCALE: AS NOTED

5

TITLE:
SHRUB PLANTING PLAN AT COURTYARD

DRAWING NO:
L-402

AS BUILT

ALL IDEAS, DESIGN, ARRANGEMENTS, OR PLANS SHALL BE USED BY, OR DISCLOSED TO ANY PERSON, FIRM, OR CORPORATION FOR ANY PURPOSE WHATSOEVER WITHOUT THE WRITTEN PERMISSION OF CARRIER JOHNSON. FILING THESE DRAWINGS OR SPECIFICATIONS WITH ANY PUBLIC AGENCY IS NOT A PUBLICATION OF SAME. NO COPYING, REPRODUCTION OR USE THEREOF IS PERMISSIBLE WITHOUT THE CONSENT OF CARRIER JOHNSON.

1. The Contractor shall be responsible for making himself familiar with all underground utilities and structures. The Contractor shall take sole responsibility for any cost incurred due to damage of said utilities or structures.
2. Do not willfully proceed with planting operations as designed when it is obvious that unknown obstructions and/or grade differences exist that may not have been known during the design process. Such conditions shall be immediately brought to the attention of the Owner. The Contractor shall assume full responsibility for all necessary revisions due to failure to give such notification prior to beginning work.
3. The Contractor shall be responsible for any coordination with subcontractors as required to accomplish planting operations.
4. Refer to the specifications for planting requirements, materials and execution.
5. All trees shall be tagged by the Landscape Architect at a nursery selected by the Contractor or at the discretion of Landscape Architect.
6. If conflicts arise between the actual size of areas on the site and the Drawings, contact the General contractor for resolution. Unless otherwise directed, the contractor shall assume the more expensive of the two options.
7. Groundcovers and shrubs are to be triangularly spaced unless otherwise indicated on the Drawings.
8. All trees within a species shall have matching form, unless noted otherwise on the Planting Plan.
9. All shrub and groundcover areas (excluding turf areas) are to be mulched with "Forest Floor 2" by Aguanaga Fertilizer Company mulch. Refer to specifications for more information.
10. The Contractor shall have 3 soil samples taken from the site. Location to be determin by the landscape architect. The samples shall be tested by a qualified soils testing laboratory for soil fertility, agricultural suitability, and soil preparation recommendations. Each soil sample shall contain approximately one (1) quart of soil. The Contractor may be requested to amend the soil to conform to these recommendations.
11. Plant quantities labeled on all plans are for in-house reference purposes only. The plant spacing shown on the Planting Legend shall take precedence during bidding and construction phases. The onus is upon the Contractor to calculate final plant quantities.
12. The results and recommendations of the soil testing laboratory shall be submitted to and approved by the City. The approved recommendations for amendments and backfill shall be incorporated into the landscape plans prior to the start of construction and shall become part of the approved plans.

GENERAL PLANTING NOTES

Scale: no scale — PLTNTS — 7

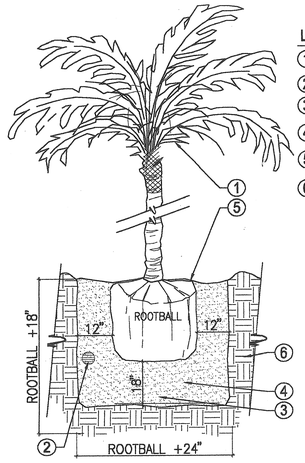

LEGEND

1. FRONDS TIED UP PRIOR TO RELOCATION, REMOVE TIES BY HAND IN 35–45 DAYS.
2. PLANT TABLET.
3. FIRM BOTTOM SAND LAYER BY WATER JETTING PRIOR TO SETTING TREE.
4. BACK FILL – 100% CLEAN WASHED CONCRETE SAND.
5. PLANT CROWN AT ORIGINAL GRADE OF ROOT BALL.
6. UNDISTURBED SOIL.

NOTE:

SEE SPECS. FOR PLANTING PROCEDURES, TRUNK & ROOT BALL REQUIREMENTS.

CONTRACTOR SHALL EXTEND SAND TO SURFACE AND SETTLE IN W/ WATER; DO NOT CAP W/ NATIVE SOIL OR PLANTER MIX.

MAINTAIN GROUNDCOVER 12" (MIN.) CLEAR FROM TRUNK

TREE TRUNKS TO BE PLUMB. TRUNK HEIGHTS TO MATCH WITHIN +/– 12".

PALM PLANTING

Scale: no scale — M02901-05 — 4

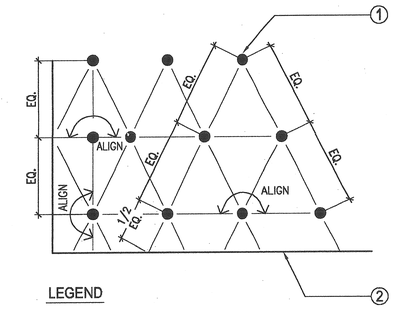

LEGEND

1. PLANT LOCATION
2. EDGE OF PLANTER OR PAVING

NOTE: SEE PLANTING SCHEDULE FOR SPACING OF ALL SHRUBS AND GROUNDCOVERS

TRIANGULAR SHRUB/G.C. SPACING

Scale: no scale — M02901-01 — 1

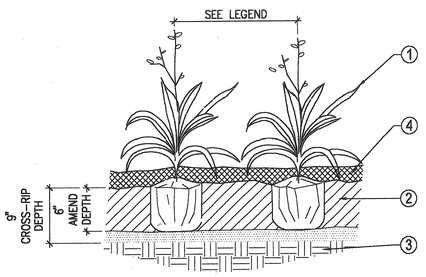

LEGEND

1. SET PLANT IN TRIANGULAR ROWS AT SPECIFIED SPACING.
2. CROSS RIP, ROTO-TILL AND AMEND ALL PLANTING AREAS.
3. UNDISTURBED SOIL.
4. 3" MULCH LAYER.

GROUND COVER PLANTING

Scale: no scale — M02901-06 — 5

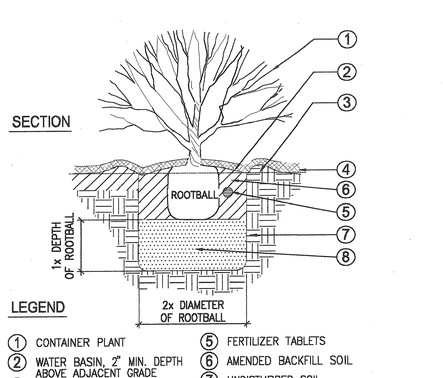

LEGEND

1. CONTAINER PLANT
2. WATER BASIN, 2" MIN. DEPTH ABOVE ADJACENT GRADE
3. 3" MULCH LAYER.
4. FINISH GRADE
5. FERTILIZER TABLETS
6. AMENDED BACKFILL SOIL
7. UNDISTURBED SOIL
8. EXCAVATE SOIL, REPLACE AND HAND TAMP.

NOTE: SET TOP OF ROOTBALL 1" ABOVE SURROUNDING GRADE.

SHRUB PLANTING

Scale: no scale — M02901-02 — 2

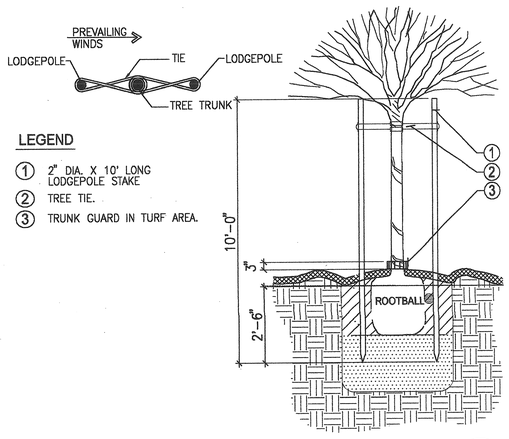

LEGEND

1. 2" DIA. X 10' LONG LODGEPOLE STAKE
2. TREE TIE.
3. TRUNK GUARD IN TURF AREA.

DOUBLE TREE STAKING

Scale: no scale — M02902-01 — 6

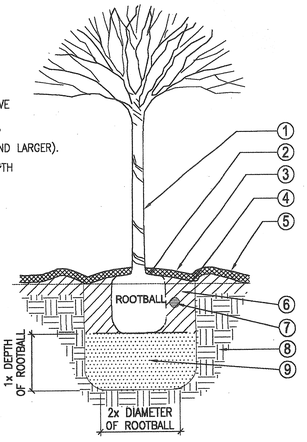

LEGEND

1. TREE
2. SET TOP OF ROOTBALL ABOVE SURROUNDING GRADE. 1" ABOVE FOR 5–15 GAL., 2" ABOVE FOR 24" BOX, 3" ABOVE FOR 36" BOX AND LARGER).
3. WATER BASIN: 4" MIN. DEPTH ABOVE ADJACENT GRADE
4. FINISH GRADE
5. 3" MULCH LAYER.
6. AMENDED BACKFILL
7. PLANT TABLETS
8. UNDISTURBED SOIL
9. EXCAVATE SOIL, REPLACE AND HAND TAMP.

TREE PLANTING

Scale: no scale — M02901-03 — 3

CARRIER JOHNSON
ARCHITECTURE
INTERIOR DESIGN
PLANNING
GORDON R. CARRIER AIA
MICHAEL C. JOHNSON AIA
WILLIAM C. BOCKEN AIA
DEBORAH P. ELLIOTT IIDA
2600 MICHELSON DRIVE
SUITE 400
IRVINE, CALIFORNIA
92612
TEL 949 955-2353
FAX 949 955-2377
1301 THIRD AVENUE
SAN DIEGO, CALIFORNIA
92101
TEL 619 239-2353
FAX 619 239-2227

ima design
2500 michelson dr
suite 125
irvine ca 92612
949.250.0023
949.250.0043 f

ONTARIO PD:: HEADQUARTERS
2534 S. ARCHIBALD AVE., ONTARIO, CALIFORNIA 91761

REGISTERED LANDSCAPE ARCHITECT
JAMES R. STOREY
LIC. NO. 2587
STATE OF CALIFORNIA

2 Addendum 2/Bldg. Dept. Re-Submittal 03.20.2003
Building Dept. Submittal 02.24.2003
ISSUE:

DIRECTORY/FILE NUMBER: 461-A812
XREF'S DRAWINGS:
PROJECT NUMBER: 461L00
DRAWN BY: CHECKED BY:
DATE: 9/30/03
SCALE: AS NOTED
TITLE: PLANTING DETAILS

DRAWING NO: L-500

AS-BUILT

ACCESSIBILITY NOTES PER 2001 CALIFORNIA BUILDING CODE - TITLE 24

REQUIREMENTS FOR ACCESS TO BUILDINGS BY PHYSICALLY DISABLED PERSONS

The following notes are shown on this set of drawings for general informational purposes only. The Contractor shall proceed with the construction of this Project only as specifically detailed on the Drawings and described in the Specifications. Any discrepancies found between the Drawings/Specifications and the following notes, either by the Contractor or the DSA Inspector, shall be immediately brought to the University Representative's attention prior to proceeding with any changes to the Construction Documents or modifying existing construction.

SITE DEVELOPMENT

WALKS + SIDEWALKS

Walks and sidewalks shall have a continuous common surface not interrupted by steps or by abrupt changes in level exceeding 1/2", and shall be a minimum of 48" in width. Sec. 1133B.7.1

When abrupt changes in level not exceeding 1/2" occur, they shall be beveled with a slope no greater than 1:2, except that level changes not exceeding 1/4" may be vertical. Sec. 1133B.7.4 & Fig. 11B-5E (c) and (d)

Abrupt changes in level along any accessible route exceeding 1/2" shall comply with the requirements for curb ramps. Sec. 1133B.7.4

Walks, sidewalks, and pedestrian ways shall be free of gratings whenever possible. For gratings located in the surface of any of these areas, grid openings in gratings shall be no greater than 1/2" wide in one direction. If gratings have elongated openings, they shall be placed so that the long dimension is perpendicular to the dominant direction of travel. Sec. 1133B.7.2 & Fig. 11B-7B (a)

When the slope in the direction of travel of any walk exceeds 1 vertical to 20 horizontal it shall comply with the provisions of Section 1007 as a pedestrian ramp. Sec. 1133B.7.3

Walk and sidewalk surface cross slopes shall not exceed 1/4" per foot. Sec. 1133B.7.1.3

Walks shall be provided with a level area not less than 60" by 60" at a door or gate that swings toward the walk, and not less than 48" wide by 44" deep at a door or gate that swings away from the walk. Sec. 1133B.7.5

Walks shall extend a minimum of 24" to the side of the strike edge of a door or gate that swings toward the walk. Sec. 1133B.7.5, Fig. 11B-26B

All walks with continuous gradients shall have level areas at least 5' in length at intervals of at least every 400'. Sec. 1133B.7.6

Walk and sidewalk surfaces shall be slip-resistant as follows: Sec. 1133B.7.1:

a. Surfaces with a slope of less than 6% gradient shall be at least as slope-resistant as that described as a medium salted finish. Sec. 1133B.7.1.1

b. Surfaces with a slope of 6% gradient shall be slip-resistant. Sec. 1133B.7.1.2

ENTRANCES + EXITS

All entrances and all exterior ground-level exits shall be accessible in compliance with Section 1114B.1.3

All building entrances that are accessible shall be identified with at least one standard sign and with additional directional signs, as required, to be visible to persons along approaching pedestrian ways. Sec. 1127B.3

PARKING

Accessible parking spaces serving a particular building shall be located on the shortest accessible route of travel from adjacent parking to a primary entrance. Sec. 1129B.1

In buildings with multiple accessible entrances with adjacent parking, accessible parking spaces shall be dispersed and located closest to the accessible entrances. Sec. 1129B.1

The minimum length of an accessible parking space shall be 18'. Sec. 1129B.4.1 & Fig. 11B-18A

One in every eight accessible spaces, but not less than one, shall be served by an access aisle 8' wide minimum and shall be designated van accessible. All such spaces may be grouped on one level of a parking structure. Sec. 1129B.4.2

Surface slopes of accessible parking spaces, but not less than one, shall be served by an access aisle 8' wide minimum and shall be designated van accessible. All such spaces may be grouped on one level of a parking structure. Sec. 1129B.4.2

All entrances to and vertical clearances with parking structures shall have a minimum vertical clearance of 8'-2" where required for accessibility to accessible parking spaces. Sec. 1130B

In each parking area, a bumper or curb shall be provided and located to prevent encroachment of cars over the required width of walkways. Sec. 1129B.4.3

Pedestrian ways which are accessible to people with disabilities shall be provided from each such parking space to related facilities, including curb cuts or ramps as needed. Sec. 1129B.4.3

Ramps shall not encroach into any parking space, with the exception of a transition ramp from a loading/unloading area to an adjacent sidewalk. The transition ramp shall be a minimum of 48" in width, a maximum of 60" in length, with a maximum slope of 1:12. Sec. 1129B.4.3 & Fig. 11B-18A through C

Accessible parking spaces shall be so located that persons with disabilities are not compelled to wheel or walk behind parked cars other than their own. Sec. 1129B.4.3.3

Each parking space reserved for persons with disabilities shall be identified by a reflectorized sign permanently posted immediately adjacent to and visible from each stall or space, consisting of a profile view of a wheelchair with occupant in white on dark blue background. The sign shall not be smaller than 70 square inches in area and, when in a path of travel, shall be posted at a minimum height of 80" from the bottom of the sign to the parking space finished grade. Sec. 1129B.5

Van accessible parking spaces shall have an additional sign stating "Van-Accessible" mounted below the symbol of accessibility. Maintain 80" height. Sec. An additional sign shall also be posted, in a conspicuous place, at each entrance to off-street parking facilities, or immediately adjacent to and visible from each stall or space. The sign shall e not less than 17" x 22" in size with lettering not less than 1" in height, which clearly and conspicuously states the "Unauthorized vehicles parked in designated accessible spaces not displaying distinguishing placards or license plates issued for persons with disabilities may be towed away at Owner's expense. Towed vehicles may be reclaimed at or by telephoning ." Note: Blank spaces are to be filled in with appropriate information as a permanent part of the The surface of each accessible parking space or stall shall have a surface identification duplicating either of the following schemes: Sec. 1129B.5 & Fig. 11B-18A through C

a. By outlining or painting the stall or space in white or suitable contrasting color a profile view depicting a wheelchair with occupant;

or

b. By outlining a profile view of a wheelchair with occupant in white on blue background. The profile view shall be located so that it is visible to a traffic enforcement officer when a vehicle is properly parked in the space and shall be 36" high by 36" wide.

PEDESTRIAN RAMPS

The maximum slope of a ramp that serves any exitway, provides access for persons with disabilities, or is in the path of travel shall be 1' rise in 12' of horizontal run. Sec. 1003.3.4.3 & 1133B.5.3

The surface of ramps shall be roughened or shall be of slip-resistant materials, per 1003.3.4.8. The cross slope shall be no greater than 2 Pedestrian ramps serving primary entrances to buildings having an occupant load of 300 or ore shall have a minimum clear width of 60". Sec. 1133B.5.2.2

All other pedestrian ramps serving primary entrances shall have minimum width of 48". Sec. 1133B.5.2.2

Landing shall be provided at the top and bottom of each ramp. Sec. 1003.3.4.4, 1133B.5.4.1 & Fig. 11B-38

Intermediate landings shall be provided at intervals not exceeding 30" of vertical rise and at each change of direction. Sec. 1133B.5.4.1 & Fig. 11B-38

Top landings shall be not be less than 60' wide and shall have a length of not less than 60" in the direction of ramp run. Sec. 1003.3.4.4, 1133B.5.4.2 & Fig. 11B-38

Doors in any position shall not reduce the minimum dimension of the ramp landing to less than 42" and shall not reduce the required width by more than 7" when fully open. Sec. 1003.3.4.4 & Fig. 11B-39

The width of the landing shall extend 24" past the strike edge of any door or gate for exterior ramps and 18" past the strike edge of interior ramps. Sec. 1003.3.4.4, 1133B.5.4.4 & Fig. 11B-39

At bottom and intermediate landings, the width shall be at least the same as required for the ramp. Sec. 1003.3.4.4 & Fig. 11B-38

Intermediate and bottom landings at a change of direction in excess of 30 degrees shall have a dimension in the direction of ramp run of not less than 72" to accommodate the handrail extension. Sec. 1133B.5.4.6, Fig. 11B-38 (b) & 11B-39 (a)

Other intermediate landings shall have a dimension in the direction of ramp run of not less than 60". Sec. 1003.3.4.4, 1133B5.4.7 & Fig. 11B-38 (a)

Handrails shall be placed on each side of each ramp, shall be continuous the full length of the ramp, shall be 34" to 38" above the ramp, shall extend a minimum of 1' beyond top and bottom of the ramp, and the ends shall be returned. Sec. 1133B.5.5.1 Fig. 11B-27 (b) & (c). The grip portion of the handrails shall be not less than 1-1/4" nor more than 1-1/2", or the shape shall provide an equivalent gripping surface, and all surfaces shall be smooth with no sharp corners. Handrails shall not rotate within their fittings. Sec. 1133B.5.5.1 & Fig. 11B-36.

Handrails projecting from a wall shall have a space 1-1/2" between the wall and the handrail. Sec. 1133B.5.5.1. & Fig. 11B-36.

Any wall or other surface adjacent to the handrails shall be free of sharp or abrasive elements. Edges shall have a minimum radius of 1/8". Sec. 1133B.5.5.1 & Fig. 11B-36 (c). Where the ramp surface is not bounded by a wall or fence and the ramp exceeds 10' in length, the ramp shall comply with one of the following requirements: Sec. 1133B.5.6, Fig. 11B-27 (b) & (c).

a. A guide curb a minimum of 2" in height shall be provided at each side of the ramp, Sec. 1133B5.6.1

or

b. A wheel guide rail shall be provided, centered 3" + 1" above the surface of the ramp. Sec. 1133B5.6.2

CURB RAMPS

1. Curb ramps shall be a minimum of 4' in width and shall lie, generally, in a single sloped plane, with a minimum of surface warping and cross slope. Sec. 1127B.5.2

2. The slope of curb ramps shall not exceed 1 vertical to 12 horizontal. Sec. 1127B.5.3

3. Maximum slopes of adjoining gutters, road surface immediately adjacent to the curb ramps, or accessible route, shall not exceed 1:20 within 4' of the top and bottom of the curb ramp. The slope of the fanned or flared sides of curb ramps shall not exceed 1 vertical to horizontal. Sec. 1127B.5.3

4. A level landing 4' deep shall be provided at the upper end of each curb ramp over its full width to permit safe egress from the ramp surface, or the slope of the fanned or flared sides of the curb ramp shall not exceed 1 vertical to 12 horizontal. Sec 1127B.5.4

5. Transitions from ramps to walks, gutters, or streets shall be flush and free of abrupt changes, except that the lower end of each curb ramp shall have a 1/2" lip beveled at 45 degrees. Sec 1127B.5.3 & 1127B.5.5

6. If diagonal (corner type) curb ramps have returned curbs or other well-defined edges, such edges shall be parallel to the direction of pedestrian flow. The bottom of diagonal curb ramps shall have 48 inches minimum clear space, Figures 11B-22(c) & 11B-22(d). If diagonal curb ramps are provided at marked crossings, the 48" clear space shall be within the markings, Figures 11B-20.C & D. If diagonal curb ramps have flared sides, they shall also have at least a 24" long segment of straight curb located on each side of the curb ramp and within the marked crossing, Figures 11B-22.c Sec. 1127B.5.10

7. All curb ramps shall have a grooved border 12 inches wide at the level of the surface of the sidewalk along the top and each side. Sec 1127B.5.7

8. A curb ramp shall have a detectable warning that extends the full width and depth of the curb ramp inside the grooved border when the ramp slope is less than 1 vertical to 15 horizontal. Detectable warnings shall consist of raised truncated domes with a diameter of nominal 0.9" at the base tapering to 0.45" at the top, a height of nominal 0.2", and a center-to-center spacing of nominal 2.35", in compliance with Figure 11B-23B. "Nominal", as used here shall be in accordance with Section 12-31-102, State Referenced Standards Code. The detectable warning shall contrast visually with adjoining surfaces, either light-on-dark or dark-on-light. The material used to provide contrast shall be an integral part of the walking surface. The domes may be constructed in a variety of methods, including cast-in-place or stamped, or may be part of a prefabricated surface treatment. Sec 1127B.5.8

9. Curb ramps shall be located or protected to prevent their obstruction by parked cars. Sec 1127B.5.9

10. Surfaces of curb ramps and its flared sides shall be stable, firm, and slip-resistant and shall be of a contrasting finish from the adjacent sidewalk. Sec 1127.B.5.6

SANITARY

A. General

1. Doorways leading to men's sanitary facilities shall be identified by an equilateral triangle 1/4" thick with edges 12" long and a vertex pointing upward. Women's sanitary facilities shall be identified by a circle 1/4" thick and 12" in diameter. Sec 1115.B.5

2. Unisex sanitary facilities shall be identified by a circle 1/4" thick, 12" diameter, with a 1/4" thick triangle superimposed on the circle and within the 12" diameter. Sec 1115.B.5

3. Geometric (circle and triangle) symbols on sanitary facility doors shall be centered on the door at a height of 60" and their color and contrast shall be distinctly different from the color and contrast of the door. Sec 1115.B.5

4. Additional signage requirements: Raised letters shall be provided and shall be accompanied by Braille in conformance with Section 1117B.5.6. They shall be installed on the wall adjacent to the latch outside of the door. Where there is no wall space on the latch side, including at double leaf doors, signs shall be placed on the nearest adjacent wall, preferably on the right. Mounting height shall be 60 inches above the finish floor to the center line of the sign. Mounting location shall be determined so that a person may approach within 3 inches of signage without encountering protruding objects or standing within the swing of a door. Sec 1117B.5.9

B. Single Accommodation Sanitary Facilities

NOTE: Single accommodation Sanitary Facility is defined as "a room that has not more that one of each type of sanitary fixture, is intended for use by only one person at a time, has no partition around the toilet, and has a door that can be locked on the inside by the room occupant." SEC 220.12

1. There shall be sufficient space in the toilet room for a wheelchair measuring 30" wide by 48" long to enter the room and permit the door to close. Sec. 1115B.7.2

2. There shall be in the room a clear floor space of at least 60" in diameter, or a T-shaped space complying with Figures 11B-12(a) and (b). No door shall encroach into this space. Sec 1115B.7.2 & Fig. 11B-1A

3. The water closet shall be located in a space which provides a minimum 28" wide clear space from a fixture or a minimum 32" wide clear space from a wall at one side. The other side shall provide 18" from the center line of the water closet to the wall. A minimum 48" clear space shall be provided in front of the water closet. Sec. 1115B.7.2 & Fig. 11B-1A

4. All doors, fixtures and controls shall be on an accessible route with a minimum clear width of 36" except at doors. If a person in a wheelchair must make a turn around an obstruction, the minimum clear width of the accessible route shall be as shown in Figure 11B-5E. Sec. 1115B.7.2

C. Multiple Accommodation Sanitary Facilities

NOTE: Multiple Accommodation Sanitary Facility is defined as "a room that has more than one sanitary fixture, is intended for the use of more than one person at a time, and which usually is provided with privacy compartments or screens shielding some fixtures from view." Sec. 214.13

1. A clear space measured from the floor to a height of 27" above the floor, within the sanitary facility room, of sufficient size to inscribe a circle with a diameter not less than 60", or a clear space 56" by 63" in size, shall be provided for wheelchair maneuvering. Doors other than the door to the accessible toilet compartment in any position may encroach into this space by not more than 12". Sec. 1115B.7.1.1 & Fig. 11B-1B

2. A water closet fixture located in a compartment shall provide a minimum 28" wide clear space from a fixture or a minimum 32" wide clear space from a wall at one side of the water closet. The other side of the water closet shall provide 18" from the center line of the water closet to the wall. Grab bars shall not project more than 3" into these clear space. Sec. 1115B.7.1.2 & Fig. 11B-1B

3. A minimum 48" long clear space shall be provided in front of the water closet if the compartment has an end opening door and a minimum 60" long clear space shall be provided in front of the water closet if the compartment has a door located at the side. Grab bars shall not project more than 3" into these clear spaces. Sec. 1115B7.1.2, Fig. 11B-1A & 1B

4. Water closet compartments shall be equipped with a door that has an automatic-closing device, and shall have a clear, unobstructed opening width of 32" when located at the end and 34" when located at the side with the door positioned at an angle of 90 degrees from its closed position. Sec 1115B.7.1.3, Fig. 11B-1A & 1B

5. When standard compartment doors are used, with a minimum clearance for footrests underneath and a self-closing device, clearance at the strike edge as specified in Section 1004.9.2.2 is not required. Sec. 1115B.7.1.3

6. The inside and outside of the compartment door shall be equipped with a loop or U-shaped handle immediately below the latch. The latch shall be flip-over style, sliding, or other hardware not requiring the user to grasp or twist. Sec. 1115B.7.1.3

7. Except for door opening widths and door swings, a clear, unobstructed access not less than 44" shall be provided to water closet compartments designed for use by persons with disabilities and the space immediately in front of a water closet compartment shall be not less than 48" as measured at a right angle to compartment door in its closed position. Sec. 1115B.7.1.3 & Fig. 11B-1B

8. Where six or more stalls are provided within a multiple accommodation toilet room, in addition to the standard accessible stall required above, at least on additional stall shall be provided with a width of 36" with an outward swinging self-closing door and parallel grab bars complying with Sections 1115B.8.2 through 115B.8.4. Sec. 1115B.7.1.5

D. Sanitary Facility Fixtures + Accessories

1. The height of accessible water closets shall be a minimum of 17" and a maximum of 19" measured to the top of a maximum 2" high toilet seat, except that 3" seats shall be permitted only in alterations where the existing fixture is less than 15" high. Sec. 1502 of Plumbing Code.

2. A clear floor space 30" by 48" shall be provided in front of a lavatory to allow a forward approach. Such clear floor space shall adjoin or overlap an accessible route and shall extend into knee and toe space underneath the lavatory. Sec. 1115B.9.1.1

3. Lavatories adjacent to a wall shall be mounted with a minimum distance of 18" to the center line of the fixture. Sec. 1504.1.1. Fig. 11B-1A

4. Lavatories shall be mounted with the rim or counter surface no higher than 34" above the finished floor and with a clearance of at least 29" from the floor to the bottom of the apron with knee clearance under the front lip extending a minimum of 30" in width and 8" minimum depth at the top. Toe clearance shall be the same width and shall be a minimum of 9" high from the floor and a minimum of 17" deep from the front of the lavatory. Sec. 1504.1.1

5. Hot water and drain pipes under lavatories shall be insulated or otherwise covered. There shall be no sharp or abrasive surfaces under lavatories. Sec. 1504.1.2

6. Where urinals are provided, at least one shall have a clear floor space 30" by 48" in front of the urinal to allow forward approach. Sec. 1115B.9.4

7. Where one or more urinals are provided, at least one with a rim projecting a minimum of 14" from the wall and at a maximum of 17" above the floor shall be provided. Sec. 1503.1.1

8. Controls for water closet flush valves shall be mounted on the side of toilet areas. Sec. 1502

9. Water closet and urinal flush valve controls, and faucet and operating mechanism controls, shall be operable with one hand, shall not require tight grasping, pinching, or twisting of the wrist, and shall be mounted no more than 44" above the floor. Sec. 1502, 1503 & 1504

10. The force required to activate water closet and urinal flush valve controls, and faucet and operating mechanism controls, shall be no greater than 5 lbf. Sec. 1502, 1503, & 1504

11. Self-closing faucet control valves are allowed if the faucet remains open for at least 10 seconds. Sec. 1504.1.3

12. Mirrors shall be mounted with the bottom edge no higher than 40" from the floor. Sec. 1115B.9.1.2

13. Where towels, sanitary napkins, waste receptacles, and other similar dispensing and disposal fixtures are provided, at least one of each type shall be located with all operable parts, including coin slots, within 40" from the finished floor. Sec. 1115B.9.2

14. Toilet tissue dispensers shall be located on the wall within 12" of the front edge of the toilet seat and no lower than 19" from the floor. Dispensers that control delivery or that do not permit continuous paper flow shall not be used. Sec. 1115B.9.3 & Fig. 11B-1A

15. Toilet room floors shall have a smooth, hard, nonabsorbent surface such as Portland cement, concrete, ceramic tile or other approved material which extends upward onto the walls at least 5". Walls within water closet compartments and walls within 24" of the front and sides of urinals shall be similarly finished to a height of 48" and, except for structural elements, the materials used in such walls shall be a type which is not adversely affected by moisture. Sec. 1115B.9.5

E. Grab Bars

1. Grab bars shall be located on each side, or on one side and the back of the accessible toilet stall or compartment. Sec. 1115B.8.1 & Fig. 11B-1A through 11B-1C

2. Grab bars at the side shall be at least 42" long with the front end positioned 24" in front of the water closet stool and with the back and positioned no more than 12" from the rear wall. Grab bars at the back shall be not less than 36" long. Sec. 1115B.8.1 & Fig. 11B-1A through 11B-1C.

3. Grab bars shall be securely attached 33" above and parallel to the floor, except that where a tank-type toilet is used which obstructs placement at 33", the grab bar may be as high as 36". Sec. 1115B.8.1 & Fig. 11B-1A through 11B-1C

4. The diameter or width of the gripping surfaces of a grab bar shall be 1-1/4" to 1-1/2" or the shape shall provide an equivalent gripping surface. If grab bars are mounted adjacent to a wall, the space between the wall and the grab bars shall be 1-1/2". Sec. 1115B.8.2 & Fig. 11B-1C

5. The structural strength of grab bars, tub and shower seats, fasteners, and mounting devices shall meet the specifications of Sec. 1115B.8.3

6. The grab bar and any wall or other surface adjacent to it shall be free of any sharp or abrasive elements. Edges shall have a minimum radius of 1/8". Sec. 1115B.8.4

F. Bathing facilities + Lockers

1. Where facilities for bathing are provided for the public, clients, or employees, including showers, bathtubs, or lockers, at least one such facility, shall be made accessible. Sec. 1115B.6 than 1

2. Compartment showers shall be 42" in width between wall surfaces and 48" in depth with an entrance opening width of 42" minimum. Sec. 1115B.6.2.1

3. Provide grab bars for compartment showers which comply with Section 1115B.8. Sec. 1115B.6.2.4.2 & Fig. 11B-2A

4. Thresholds or recessed drops at compartment showers shall be a maximum of 1/2" in height and shall be beveled or sloped at an angle not exceeding 45 degrees from the horizontal. Sec. 1115B.6.2.2

5. Compartment shower floors shall slope toward the rear to a drain located within 6" of the rear wall, with a maximum floor slope of 1/2" per foot in any direction. The floor surfaces shall be of Carborundum or grit-faced tile or of material providing equivalent slip-resistance. Sec. 1115B.6.2.3

6. The following compartment shower accessories shall be provided: Sec. 1115B.6.2.4.5 & Fig. 11B-2A a. A folding seat located within 27" of the controls and mounted 18" above the bathroom floor. When folded, the seat shall not extend more than 6" from the mounting wall. Sec. 1115B.6.2.4.5 b. L-shaped grab bars located on walls adjacent to and opposite the seat. Grab bars shall comply with diameter, loading, and projection requirements of Section 1115B.8. Grab bars shall be not less than 33" or higher than 36" in height, with an L- shaped grab bar mounted on walls opposite and adjacent to the front edge of the seat, but not extended to include that portion of wall over the seat. Sec. 1115B.6.2.4.5, Fig. 11B-2A or 11B-2B d. Soap dish located on the control wall at a maximum height of 40" above the floor.

7. Showers shall be finished with a smooth, hard, nonabsorbent surface such as Portland cement, concrete, ceramic tile, or other approved material to a height of not less than 70" above the drain inlet. Materials other than structural elements used in such walls shall be of a type which is not adversely affected by moisture. Sec. 1115B.9.6

8. A flexible hand-held shower unit with a hose at least 60" long shall be provided with a head mounting height of 48" + 1" maximum above the shower floor. Sec. 1505.2, Sec. 1115B.6.2.4.2 & Fig. 11B-2A 9. Water controls for showers of a single lever design shall be located on the side wall adjacent the seat, 40"+ 1" above the shower floor and shall be operable with a maximum force of 5 plf. Sec 1505(a) & Fig. 11B-2A

ENTRANCES, EXITS, DOORS + AREAS FOR EVACUATION ASSISTANCE

A. Entrances, Exits, + Doors

NOTE: For the purpose of Title 24, the use of the term Exit Door in Section 1003.3.1, shall mean all of those doors or doorways along the pass of exit travel anywhere in a means of egress system.

1. Accessibility to buildings or portions of buildings shall be provided for all occupancy clasifications except as modified or enhanced by this chapter. Sec. 1103B All entrances and exterior ground-floor exit doors to buildings and facilities shall be made accessible to persons with disabilities. Sec. 1133B.1.1.1.1

2. Regardless of the occupant load served, exit doors shall be openable from the inside without the use of a key or any special knowledge or effort. Sec. 1003.3.1.8

3. Hand-activated door opening hardware shall be centered between 30" and 44" above the floor. Sec. 1133B.2.5

4. Every doorway which is located within an accessible path of travel shall be of a size as to permit the installation of a door not less than 3' in width and not less than 6'-8' in height. When installed, exit doors shall be capable of opening so that the clear width of the exit is not less than 32". Sec 1003.3.1.3a, Fig. 11B-33

5. For hinged doors, the opening width shall be measured with the door positioned at an angle of 90 degrees from its closed position. Sec. 1003.3.1.3a, 1133B.2.3 & Fig. 11B-33(a)

6. Where a pair of doors is utilized, at least one of the doors shall provide a clear, unobstructed opening width of 32" with the leaf positioned at an angle of 90 degrees from its closed position. Sec. 1133B.2.3.1

7. Minimum maneuvering clearances at doors shall be as shown in Figure 11B-26a and b. The floor or ground area within the required clearances shall be level and clear. Sec. 1133B.2.4.2

8. There shall be a level and clear floor of landing on each side of a door. The level area shall have a length in the direction of door swing of at least 60" and the length opposite the direction of door swing of 48" as measured at right angle to the plane of the door in its closed position. Sec. 1003.3.1.6.2a, 1133B.2.4, 1133B.2.4.2, Fig. 11B-26

9. Regardless of the occupant load served, landings shall have a width not less than the width of the door or the width of the stairway served. Sec. 1003.3.1.7

10. The width of the level area on the side to which the door swings shall extend a minimum of 24" past the strike edge of the door for exterior doors and a minimum of 18" past the strike edge for interior doors. Additional 12" is required at the push side, if door is equipped with both latch and closer. Sec. 1133B.2.4.3 & Fig. 11B-26A.

11. The floor or landing shall be not more than 1/2" lower than the threshold of the doorway. Sec. 1003.3.1.6, & Fig. 11B-32

12. The space between two consecutive door openings in a vestibule, serving other than a required exit stairway, shall provide a minimum of 48" of clear space from any door opening into such vestibule when the door is positioned at an angle of 90 degrees from its closed position. Doors in a series shall swing either in the same direction or away from the space between the doors. See Figures 11B-30 & 11B-31 for design alternatives. Sec. 1133B.2.4.4

13. The bottom 10" of all doors except automatic and sliding shall have a smooth, uninterrupted surface to allow the door to be opened by a wheelchair footrest without creating a trap or hazardous condition. Where narrow frame doors are used, a 10" high smooth panel shall be installed on the push side of the door, which will allow the door to be opened by a wheelchair footrest without creating a trap or hazardous condition. Sec. 1133B.2.6 & Fig. 11B-29

14. Maximum effort to operate doors shall not exceed 8-1/2 pounds for exterior doors, and 5 pounds for interior doors, such pull or push effort being applied at right angles to hinged doors and at the center plane of sliding or folding doors. Compensating devices or automatic door operators may be utilized to meet the above standards.

STAIRWAYS

1. Stairways shall have handrails on each side, and every stairway required to be more than 88" in width shall be provided with not less than one intermediate handrail for each 88" of required width. Intermediate handrails shall be spaced approximately equally across the entire width of the stairway. Sec. 1003.3.3.6

2. Handrails shall be 34" to 38" above the nosing of the treads. Sec. 1003.3.3.6 & Fig. 11B-35

3. Handrails shall extend a minimum of 12" beyond the top nosing and 12" plus the tread width beyond the bottom nosing. Sec. 1003.3.3.6, 1133B.4.2.2, Fig. 11B-35 & Fig. 11B-37

4. Where the extension of the handrail in the direction of the stair run would create a hazard, the termination of the extension shall be made either rounded or returned smoothly to the floor, wall, or post. Where the stairs are continuous from landing to landing, the inner rail shall be continuous and need not extend out into the landing. Sec. 1133B.4.2.4 & Fig. 11B-37

5. Ends shall be returned or terminated in newel posts or safety lift. Sec. 1003.3.3.6 & 1133B.4.2.3

6. Handrails projecting from a wall shall have a space of 1-1/2" between the wall and the handrail. Handrails may be located in a recess if the recess is a maximum of 3" deep and extends at least 18" above the top of the rail. Sec. 1003.3.3.6, 1133B.4.2.5 & Fig. 11B-36

7. The upper approach and the lower tread of each stair shall be marked by a strip of clearly contrasting color at least 2" and no more than 4" wide and placed parallel to and not more than 1" from the nose of the step or landing to alert the visually impaired. The strip shall be of a material that is at least a slip-resistant as the other treads of the stair. A painted strip shall be acceptable. Sec. 1133B.4.4 & Fig. 11B-35

8. Where stairways occur outside a building, the upper approach and all treads shall be marked by a strip of clearly contrasting color at least 2" and no more than 4" wide and placed parallel to and not more than 1" from the nose of the step or landing to alert the visually impaired. The strip shall be of a material that is at least as slip-resistant as the other treads of the stair. A painted strip shall be acceptable. Sec. 1133B.4.4 & Fig. 11B-35

9. All tread surfaces shall be slip-resistant. Treads shall have smooth, rounded, or chamfered, exposed edges, and no abrupt edges at the nosing (front edge). Sec. 1133B4.5.1

10. The nosing shall not project more than 1-1/2" past the face of the riser below. Sec. 1133B.4.5.2 & Fig. 11B-35

11. Open risers are not permitted. Sec. 1133B.4.5.3 & Fig. 11B-35

PUBLIC TELEPHONES

1. If public telephones are provided, they shall be made accessible. Sec. 1111A.1

2. A clear floor or ground space at least 30" by 48" that allows either a forward or parallel approach by a person using a wheelchair shall be provided at telephones. Sec. 1111A.2 & Fig. 11B-4

3. The highest operable part of the telephone shall be within reach ranges in Section 1111A.6, Fig. 11B-4

4. Telephones mounted diagonally in a corner that require wheelchair users to reach diagonally shall have the highest operable part no higher than 54" above the floor. Sec. 1111A.6 & Fig. 11B-4

5. The cord from the telephone to the handset shall be at least 29" long. Sec. 1111A.11

6. Telephones shall have push-button controls where service for such equipment is available. Sec. 1111A.10 7. If telephone enclosures are provided, they shall comply with the following: Sec. 1111A.7

a. For side approach telephones, the enclosure overhang shall be no greater than 19" and the height of the lowest overhanging part shall be equal to or greater than 27". Sec. 1111A.7.1 & Fig. 11B-4(a)

b. For forward approach telephones, if the enclosure overhang is greater than 12", the clear width of the enclosure shall be 30" minimum; if the clear width of the enclosure is less than 30", the height of the lowest overhanging part shall be equal to or greater than 27". Sec. 1111A.7.3 & Fig. 11B-4(c)

c. Entrances to full-height enclosures shall be 30" minimum. Sec. 1111A.7.2 & Fig. 11B-4(b)

ARCHITECTURE
INTERIOR DESIGN
PLANNING

CARRIER JOHNSON

GORDON R. CARRIER AIA
MICHAEL C. JOHNSON AIA

WILLIAM C. BOCKEN AIA
DEBORAH P. ELLIOTT IIDA

2600 MICHELSON DRIVE
SUITE 400
IRVINE, CALIFORNIA
92612

TEL 949 955-2353
FAX 949 955-2377

1301 THIRD AVENUE
SAN DIEGO, CALIFORNIA
92101

TEL 619 239-2353
FAX 619 239-6227

RECORD DOCUMENTS

THESE DOCUMENTS RELEASED BY CARRIER JOHNSON FOR USE AS RECORD DOCUMENTS WILL SHOW THE REPORTED LOCATION OF THE WORK AND SIGNIFICANT CHANGES MADE DURING THE CONSTRICTION PROCESS, AND ARE BASED ON UNVERIFIED INFORMATION PROVIDED BY THE CONTRACTOR AND OTHER PARTIES WHICH WILL BE ASSUMED RELIABLE. CARRIER JOHNSON CANNOT AND DOES NOT WARRANT THE ACCURACY AND/OR COMPLETENESS OF THIS INFORMATION AND SHALL NOT BE RESPONSIBLE FOR ANY ERRORS OR OMISSIONS WHICH MAY BE INCORPORATED THEREIN AS A RESULT. FUTURE CONSTRUCTION PLANNING MUST INCLUDE FIELD CONFIRMATION OF EXISTING CONDITIONS.

ONTARIO PD::
HEADQUARTERS
2534 S. ARCHIBALD AVE., ONTARIO, CALIFORNIA 91761

F13 Field Order #13 07.01.03
5 Addendum 5 04.21.2003
3 Addendum 3
2 Addendum 2/Bldg. Dept. Re-Submittal 03.20.2003
Building Dept. Submittal 02.24.2003

ISSUES:

DIRECTORY/FILE NUMBER: 4511.00
4511-A02

XREF'S DRAWINGS:

PROJECT NUMBER:
4511.00

DRAWN BY: CHECKED BY:

DATE: 1/23/03 CHECKED BY:

SCALE:

TITLE:
ACCESSIBILTY NOTES/ TITLE 24

DRAWING NO:
A0.2

ALL IDEAS, DESIGN, ARRANGEMENTS AND PLANS INDICATED OR REPRESENTED BY THIS DRAWING ARE OWNED BY, AND THE PROPERTY OF CARRIER JOHNSON AND WERE CREATED, EVOLVED AND DEVELOPED FOR USE ON, AND IN CONNECTION WITH THIS PROJECT. NONE OF SUCH IDEAS, DESIGN, ARRANGEMENTS, OR PLANS SHALL BE USED BY, OR DISCLOSED TO ANY PERSON, FIRM, OR CORPORATION FOR ANY PURPOSE WHATSOEVER WITHOUT THE WRITTEN PERMISSION OF CARRIER JOHNSON. FILING THESE DRAWINGS OR SPECIFICATIONS WITH ANY PUBLIC AGENCY IS NOT A PUBLICATION OF SAME. NO COPYING, REPRODUCTION OR USE THEREOF IS PERMISSIBLE WITHOUT THE CONSENT OF CARRIER JOHNSON.

GENERAL NOTES

A. GENERAL

1. ALL WORK INCLUDING MATERIALS AND WORKMANSHIP SHALL CONFORM TO THE REQUIREMENTS OF LOCAL CODES, LAWS, ORDINANCES, 2001 EDITION OF THE UNIFORM BUILDING CODES, AND CALIFORNIA 2001 CALIFORNIA BUILDING CODE AND 2000 UNIFORM FIRE CODE / N.F.P.A. 13 - FIRE SPRINKLER STANDARD, N.F.P.A. 72 - FIRE ALARM/MONITORING.
2. NOT USED. (5)
3. DO NOT SCALE DRAWINGS. ALL DIMENSIONS SHALL TAKE PRECEDENCE OVER SCALE SHOWN ON PLANS, SECTIONS, AND DETAILS. IF THESE DRAWINGS ARE LESS THAN 30 INCHES BY 42 INCHES IN SIZE THEY HAVE BEEN REDUCED.
4. NOTES AND DETAILS ON DRAWINGS SHALL TAKE PRECEDENCE OVER GENERAL NOTES

B. EXITING

1. ALL EXIT DOORS SHALL BE OPENABLE FROM THE INSIDE, WITHOUT THE USE OF A KEY OF ANY SPECIAL KNOWLEDGE OR EFFORT, AND MUST SWING IN THE DIRECTION OF EXIT OVER A LANDING NOT MORE THAN 1/2" BELOW THRESHOLD [SECTION 1003.3.1 C.B.C. & PART III, ARTICLE 12, SECTION 1207, C.F.C.].
2. ALL CORRIDORS MUST MAINTAIN A MINIMUM UNOBSTRUCTED WIDTH OF 44" (SECTION 1004.3.4.2, C.B.C.).
3. ALL EXIT SIGNS SHALL BE POWERED BY TWO SEPARATE POWER SUPPLIES (CBC SECTION 1013.4) AND SHALL HAVE LETTERS 6 INCH HIGH AND 3/4 INCH WIDE, AND SHALL BE LIGHTED WITH TWO 15 WATT ELECTRIC LAMPS MINIMUM.
4. EXIT SIGNS WILL BE INTERNALLY ILLUMINATED. THE WORD 'EXIT' SHALL BE LETTERED IN GREEN ON A WHITE OR OPAQUE BACKGROUND (SECTIONS 1003.2.8 & 1013.3 CBC & PART III, ARTICLE 12, SECTION 1212.4 C.F.C).
5. ALL EXITS MUST BE PROVIDED WITH EMERGENCY LIGHTING , HAVING INTENSITY OF NOT LESS THAN ONE FOOT CANDLE AT FLOOR LEVEL (SECTION 1003.2.9 C.B.C.). THE POWER SUPPLY FOR THIS LIGHTING SHALL BE SIMILAR TO EXIT SIGN REQUIREMENTS.

C. MATERIALS AND FINISHES

1. ALL FINISH MATERIALS SHALL COMPLY WITH THE REQUIREMENTS OF CHAPTER 8 C.B.C. AND DIVISION IV, C.F.C.
2. ALL INTERIOR WALL AND CEILING FINISHES FOR EXIT CORRIDORS SHALL NOT EXCEED AN END POINT FLAMESPREAD of 75.
3. ANY DECORATION USED IN A PUBLIC AREA SHALL BE NON-COMBUSTIBLE OR FLAMEPROOFED IN AN APPROVED MANNER. (EXAMPLE: DRAPES, CURTAINS, SHADES, HANGINGS, ETC.)
4. CONTRACTOR SHALL PROVIDE ACCESS PANELS AS REQUIRED BY THE PLUMBING, MECHANICAL, AND AS REQUIRED BY THE BUILDING CODE. TYPE, FINISH AND LOCATION SHALL BE APPROVED BY THE ARCHITECT PRIOR TO FABRICATION AND INSTALLATION. CONTRACTOR TO SUBMIT A LOCATION PLAN FOR THE ARCHITECT'S REVIEW PRIOR TO INSTALLATION.
5. FIXED GLASS PANELS WITHIN 24" OF DOORS AND GLAZING WITHIN 18" OF A WALKING SURFACE MUST BE OF SAFETY GLAZING MATERIALS PER C.B.C. SECTION 2406.
6. SUSPENDED CEILING FRAMING SYSTEMS ARE TO BE DESIGNED FOR LATERAL FORCES AS OUTLINED IN THE C.B.C. SUPPORTS SHALL BE OF NON-COMBUSTIBLE CONSTRUCTION PER C.B.C.
7. WHERE INTERIOR SUSPENDED GYPSUM BOARD OR ACOUSTICAL TILE CEILINGS OCCUR BESIDE STANDARD HANGERS, THERE SHALL BE ONE "VARIABLE SEISMIC BRACE" EVERY 144 SQUARE FEET OF ANY GIVEN SUSPENDED CEILING SYSTEM. ATTACH 12 GA. HANGER WIRE TO PERIMETER, SUSPENDED RUNNER CHANNEL OR "TEE" AT 4'-0" O/C MAXIMUM, AND NOT TO EXCEED 6" FROM PERIMETER WALLS.
8. ALL FLOORS IN PUBLIC AREAS SHALL BE OF SLIP-RESISTANT SURFACE.
9. ELECTRICAL CONDUITS SHALL BE NON-COMBUSTIBLE CONSTRUCTION AT ALL WALL AND FLOOR PENETRATIONS.
10. SURFACES TO RECEIVE PAINT OR WALLCOVERING WILL BE PROPERLY SEALED, SANDED, ETC. PRIOR TO APPLICATION - LEVEL 4 FINISH.
11. TYPICAL FLOOR COVERING TRANSITION IS AT THE CENTERLINE OF THE DOOR OR AT THE CENTERLINE OPENING WHERE NO DOOR IS PRESENT U.N.O.
12. PATCH ALL AREAS WHERE FLOOR IS NOT LEVEL OR IS CRACKED PRIOR TO INSTALLING FINISH FLOORING, SEE SPECIFICATIONS FOR TOLERANCES.
13. "ALL DECORATIVE MATERIALS SHALL BE MAINTAINED IN A FLAME RETARDANT CONDITION," (C.A.C. TITLE 19, SECTION 1.14, 3.08, 3.21 AND DIVISION IV, C.F.C.).

D. FIRE PROTECTION

1. BUILDING NUMBER SHALL BE EASILY VISIBLE AND LEGIBLE FROM THE STREET OR ROAD FRONTING THE PROPERTY (PART III, ARTICLE 9, C.F.C. SECTION 901.4.4)
2. THE CONSTRUCTION, REMODEL OR DEMOLITION OF A BUILDING SHALL COMPLY WITH PART VII, ARTICLE 87, C.F.C.
3. THE CONTRACTOR WILL PROVIDE KEY (KNOX) BOXS IN ACCORDANCE WITH PART III, ARTICLE 9, SECTION 902.4, C.F.C. AS INDICATED ON THE DRAWINGS.
4. THE INSTALLATION OF AUTOMATIC FIRE SPRINKLER SYSTEMS SHALL COMPLY WITH THE U.B.C STANDARD NO. 9-1 & 9-2 AND SECTION 904, C.B.C.
5. DRAWINGS FOR ALL FIXED FIRE PROTECTION EQUIPMENT SHALL BE SUBMITTED TO THE ONTARIO FIRE DEPARTMENT FOR APPROVAL PRIOR TO INSTALLATION.
6. PROVIDE A MINIMUM OF ONE 2A10BC CLASSIFICATION FIRE EXTINGUISHER WITHIN 75 FEET TRAVEL DISTANCE FOR EACH 6,000 SQUARE FEET OR PORTION THEREOF ON EACH FLOOR. (PART III, ARTICLE 10, & DIVISION V, C.F.C. STANDARDS 10-1 AND CAL. CODE REGULATIONS, TITLE 19, SECTION 3.29)
7. INTERIOR FINISH SHALL COMPLY WITH C.B.C. CHAPTER 8.
8. ALL DECORATIVE MATERIALS SHALL BE MAINTAINED IN A FLAME-RETARDANT CONDITION. (CCR, TITLE 19, SECTIONS 1.14, 3.08, 3.21 AND CFC SECTIONS 1103.3.3, 2501.5 & 2501.6, PART III, SECTIONS 1103 & DIVISION IV, C.F.C.)
9. PROVIDE ONE (1) WALL MOUNTED 4A20BC FIRE EXTINGUISHER AT EACH MECHANICAL, ELECTRICAL AND EQUIPMENT ROOM.
10. FIRE PROTECTION, INCLUDING FIRE APPARATUS, ACCESS ROADS AND WATER SUPPLIES FOR FIRE PROTECTION, SHALL BE MADE SERVICEABLE PRIOR TO AND DURING TIME OF CONSTRUCTION.(PART III, ARTICLES 9 & 81,C.F.C.).
11. FIRE HYDRANT LOCATIONS SHALL BE IDENTIFIED BY THE INSTALLATION OF REFLECTIVE MARKERS. (PART III, ARTICLE 9, SECTION 901.4.3, C.F.C)
12. EMERGENCY PLANS SHALL BE SUBMITTED TO THE ONTARIO FIRE DEPARTMENT FOR REVIEW AND APPROVAL PRIOR TO OCCUPANCY. (PART III, ARTICLE 13, SECTION 1303.4.2)
13. COMPLETE DRAWINGS AND SPECIFICATIONS FOR FIRE ALARM SYSTEMS, FIRE-EXTINGUISHING SYSTEMS, INCLUDING AUTOMATIC SPRINKLERS, WET AND DRY STANDPIPES, PIPE INLETS, AND OTHER SPECIAL TYPES OF AUTOMATIC FIRE-EXTINGUISHING SYSTEMS, THERETO SHALL BE SUBMITTED TO THE ONTARIO FIRE DEPARTMENT FOR REVIEW AND APPROVAL PRIOR TO INSTALLATION.
14. ALL VALVES CONTROLLING THE WATER SUPPLY FOR AUTOMATIC SPRINKLER SYSTEMS AND WATER-FLOW SWITCHES ON ALL SPRINKLER SYSTEMS SHALL BE ELECTRICALLY MONITORED WHERE THE NUMBER OF SPRINKLERS IS 100 OR MORE. (SECTION 904.3.1, C.B.C. & PART III, ARTICLE 10, SECTION 1003.3, C.F.C.)
15. STANDPIPE SYSTEMS SHALL COMPLY WITH THE REQUIREMENTS OF CBC 904.5 AND C.B.C. STANDARD 9-2.
16. FIRE HYDRANTS ARE PRIVATE AND REQUIRE ON-SITE FIELD INSPECTIONS. FIRE HYDRANTS SHALL COMPLY WITH FIRE DEPARTMENT REQUIREMENTS FOR ON-SITE FIRE HYDRANTS. (U.F.C. SECTION 903.4)

E. ENERGY STANDARDS

ENERGY CONSERVATION STANDARDS
PROVISIONS APPLICABLE TO ALL OCCUPANCIES

1. INSTALLATION OF CERTIFIED INSULATING MATERIAL:

a. INSULATING MATERIAL OF THE TYPES LISTED IN TABLE 2-53D SHALL BE INSTALLED IN ANY BUILDING ONLY IF THE INSULATING MATERIAL HAS BEEN CERTIFIED BY THE MANUFACTURER TO COMPLY WITH THE CALIFORNIA QUALITY STANDARDS FOR INSULATING MATERIAL. SEE APPENDIX 2-53A FOR AVAILABILITY OF DIRECTORIES OF CERTIFIED INSULATING MATERIAL.

TABLE 2-53D:
INSULATING MATERIAL SUBJECT TO REGULATION

TYPE	FORM
ALUMINUM FOIL	REFLECTIVE FOIL
CELLULAR GLASS	BOARD FORM
CELLULOSE FIBER	LOOSE FILL AND SPRAY APPLIED
MINERAL AGGREGATE	BOARD FOAM
MINERAL FIBER	BLANKETS, BOARD FORM, LOOSE FILL
PERLITE	LOOSE FILL
POLYSTYRENE	BOARD FORM, MOLDED, EXTRUDED
POLYURETHANE	BOARD FORM AND FIELD APPLIED
POLYISOCYANURATE	BOARD FORM AND FIELD APPLIED
UREA FORMALDEHYDE FOAM	FIELD APPLIED
VERMICULITE	LOOSE FILL

b. ALL INSULATING MATERIALS SHALL BE INSTALLED IN COMPLIANCE WITH THE FLAME-SPREAD RATING AND SMOKE DENSITY REQUIREMENTS OF SECTION 2602 OF THE CALIFORNIA BUILDING CODE.

2. SECTION 2-5317 - INFILTRATION/EXFILFILTRATION CONTROLS: [RECODIFIES, WITH AMENDMENTS, CURRENT SS 2-4324, 2-5352(d)(1)-(3), 2-5362(d)(1)].

a. DOORS AND WINDOWS BETWEEN CONDITIONED AND UNCONDITIONED SPACES, SUCH AS EXTERIOR AREAS, STAIRWELLS, SERVICE AREAS AND TRASH ROOMS SHALL BE DESIGNED TO LIMIT AIR LEAKAGE INTO OR FROM THE BUILDING ENVELOPE.

b. MANUFACTURED DOORS AND WINDOWS SHALL HAVE AIR INFILTRATION RATES CERTIFIED BY THE MANUFACTURER AS NOT EXCEEDING THOSE SHOWN IN TABLE 2-53J. LABELS INDICATING TESTING AND COMPLIANCE WITH INDUSTRY STANDARDS ARE ADEQUATE DEMONSTRATION AND CERTIFICATION OF COMPLIANCE WITH THIS SUBSECTION, 2-5317(b).

c. SITE-CONSTRUCTION DOORS AND WINDOWS, EXTERIOR JOINTS, AND OPENINGS IN THE BUILDING ENVELOPE THAT ARE OBSERVABLE SOURCES OF AIR LEAKAGE SHALL BE CAULKED, GASKETED, WEATHER-STRIPPED OR OTHERWISE SEALED.

EXCEPTIONS:

1. FIRE-RATED DOORS AND WINDOWS, AND UNFRAMED GLASS DOORS DO NOT HAVE TO MEET THE REQUIREMENTS OF THIS SECTION.

NONRESIDENTIAL ENERGY STANDARDS COMPLIANCE (TITLE 24, PART 6,CH.1)

ENVELOPE MANDATORY MEASURES

INSTALLED INSULATING MATERIAL SHALL HAVE BEEN CERTIFIED BY THE MANUFACTURER TO COMPLY WITH THE CALIFORNIA QUALITY STANDARDS OF INSULATING MATERIAL.

ALL INSULATED MATERIALS SHALL BE INSTALLED IN COMPLIANCE WITH THE FLAME SPREAD RATING AND SMOKE DENSITY REQUIREMENTS OF SECTION 2602 OF THE UBC.

ALL EXTERIOR JOINTS AND OPENINGS IN THE BUILDING ENVELOPE THAT ARE OBSERVABLE SOURCES OF AIR LEAKAGE SHALL BE CAULKED, GASKETED, WEATHERSTRIPPED OR OTHERWISE SEALED.

SITE CONSTRUCTED DOORS, WINDOWS AND SKYLIGHTS SHALL BE CAULKED BETWEEN THE UNIT AND THE BUILDING AND SHALL BE WEATHERSTRIPPED(EXCEPT FOR UNFRAMED GLASS DOORS AND FIRE DOORS).

MANUFACTURED DOORS AND WINDOWS INSTALLED SHALL HAVE AIR INFILTRATION RATES CERTIFIED BY THE MANUFACTURER PER 2-5316(a)1. AFTER JULY 1, 1993, MANUFACTURED FENESTRATION PRODUCTS MUST BE LABELED FOR U-VALUE ACCORDING TO NFRC PROCEDURES.

- ☐ DEMISING WALL INSULATION SHALL BE INSTALLED IN ALL OPAQUE PORTIONS OF FRAMED WALLS (EXCEPT DOORS).

TABLE 2-53J: NON-RESIDENTIAL DOORS

ALLOWABLE AIR INFILTRATION RATES 1.2 (cfm/sq.ft of door area)

(cfm/ft of operable sash crack)	swinging, sliding (single door)	swinging, sliding (double door)	sliding
0.50	0.50	0.50	1.0

NOTES:

1. WHEN TESTED AT A PRESSURE DIFFERENTIAL OF 1.567 LB/SQ. FT. WHICH IS EQUIVALENT TO THE PRESSURE OF A 25 MPH WIND.
2. COMPLIANCE WITH THE CRITERIA FOR AIR LEAKAGE SHALL BE DETERMINED BY SPECIFICATION E-283-73 OF ASTM (STANDARD METHOD OF TEST FOR AIR LEAKAGE THROUGH EXTERIOR WINDOWS, CURTAIN WALLS AND DOORS).
3. ALL INTERIOR/EXTERIOR DOORS AND WINDOWS TO BE CAULKED, WEATHERSTRIPPED AND SEALED FOR AN AIRTIGHT FIT.
4. OPENINGS TO BE CAULKED AND SEALED (I.E., AROUND JOINTS IN WINDOWS, WALL SOLE PLATES, OPENINGS FOR UTILITY PIPING AND WIRING, ETC.)
5. MANUFACTURED DOORS AND WINDOWS TO MEET APPLICABLE ANSI OR NWMA STANDARDS AND BE SO LABELED.
6. MATERIALS EXPOSED WITHIN DUCT OR PLENUM SHALL COMPLY WITH SECTION 601.3 C.M.C.
7. DOORS AND WINDOWS SHALL MEET THE MINIMUM INFILTRATION REQUIREMENTS PER SECTION 116E.E.5

ARCHITECTURE
INTERIOR DESIGN
PLANNING

CARRIER JOHNSON

GORDON R. CARRIER AIA
MICHAEL C. JOHNSON AIA

WILLIAM C. BOCKEN AIA
DEBORAH P. ELLIOTT IIDA

2600 MICHELSON DRIVE
SUITE 400
IRVINE, CALIFORNIA
92612

TEL 949 955-2353
FAX 949 955-2377

1301 THIRD AVENUE
SAN DIEGO, CALIFORNIA
92101

TEL 619 239-2353
FAX 619 239-6227

RECORD DOCUMENTS
THESE DOCUMENTS RELEASED BY CARRIER JOHNSON FOR USE AS RECORD DOCUMENTS WILL SHOW THE REPORTED LOCATION OF THE WORK AND SIGNIFICANT CHANGES MADE DURING THE CONSTRICTION PROCESS, AND ARE BASED ON UNVERIFIED INFORMATION PROVIDED BY THE CONTRACTOR AND OTHER PARTIES WHICH WILL BE ASSUMED RELIABLE. CARRIER JOHNSON CANNOT AND DOES NOT WARRANT THE ACCURACY AND/OR COMPLETENESS OF THIS INFORMATION AND SHALL NOT BE RESPONSIBLE FOR ANY ERRORS OR OMISSIONS WHICH MAY BE INCORPORATED THEREIN AS A RESULT. FUTURE CONSTRUCTION PLANNING MUST INCLUDE FIELD CONFIRMATION OF EXISTING CONDITIONS.

ONTARIO PD::
HEADQUARTERS
2534 S. ARCHIBALD AVE., ONTARIO, CALIFORNIA 91761

Field Order #13 07.01.03
(5) Addendum 5 04.21.2003
(3) Addendum 3
(2) Addendum 2/Bldg. Dept. Re-Submittal 03.20.2003
Building Dept. Submittal 02.24.2003
ISSUES:
DIRECTORY/FILE NUMBER: 4511.00
4511A03
XREF'S DRAWINGS:
PROJECT NUMBER:
4511.00
DRAWN BY: CHECKED BY:
DATE:
1/23/03
SCALE:
TITLE:
GENERAL NOTES
DRAWING NO:
A0.3

ALL IDEAS, DESIGN, ARRANGEMENTS AND PLANS INDICATED OR REPRESENTED BY THIS DRAWING ARE OWNED BY, AND THE PROPERTY OF CARRIER JOHNSON AND WERE CREATED, EVOLVED AND DEVELOPED FOR USE ON, AND IN CONNECTION WITH THIS PROJECT. NONE OF SUCH IDEAS, DESIGN, ARRANGEMENTS, OR PLANS SHALL BE USED BY, OR DISCLOSED TO ANY PERSON, FIRM, OR CORPORATION FOR ANY PURPOSE WHATSOEVER WITHOUT THE WRITTEN PERMISSION OF CARRIER JOHNSON. FILING THESE DRAWINGS OR SPECIFICATIONS WITH ANY PUBLIC AGENCY IS NOT A PUBLICATION OF SAME. NO COPYING, REPRODUCTION OR USE THEREOF IS PERMISSIBLE WITHOUT THE CONSENT OF CARRIER JOHNSON.

ALL IDEAS, DESIGN, ARRANGEMENTS AND PLANS INDICATED OR REPRESENTED BY THIS DRAWING ARE OWNED BY, AND THE PROPERTY OF CARRIER JOHNSON AND WERE CREATED, EVOLVED AND DEVELOPED FOR USE ON, AND IN CONNECTION WITH THIS PROJECT. NONE OF SUCH IDEAS, DESIGN, ARRANGEMENTS, OR PLANS SHALL BE USED BY, OR DISCLOSED TO ANY PERSON, FIRM, OR CORPORATION FOR ANY PURPOSE WHATSOEVER WITHOUT THE WRITTEN PERMISSION OF CARRIER JOHNSON. FILING THESE DRAWINGS OR SPECIFICATIONS WITH ANY PUBLIC AGENCY IS NOT A PUBLICATION OF SAME. NO COPYING, REPRODUCTION OR USE THEREOF IS PERMISSIBLE WITHOUT THE CONSENT OF CARRIER JOHNSON.

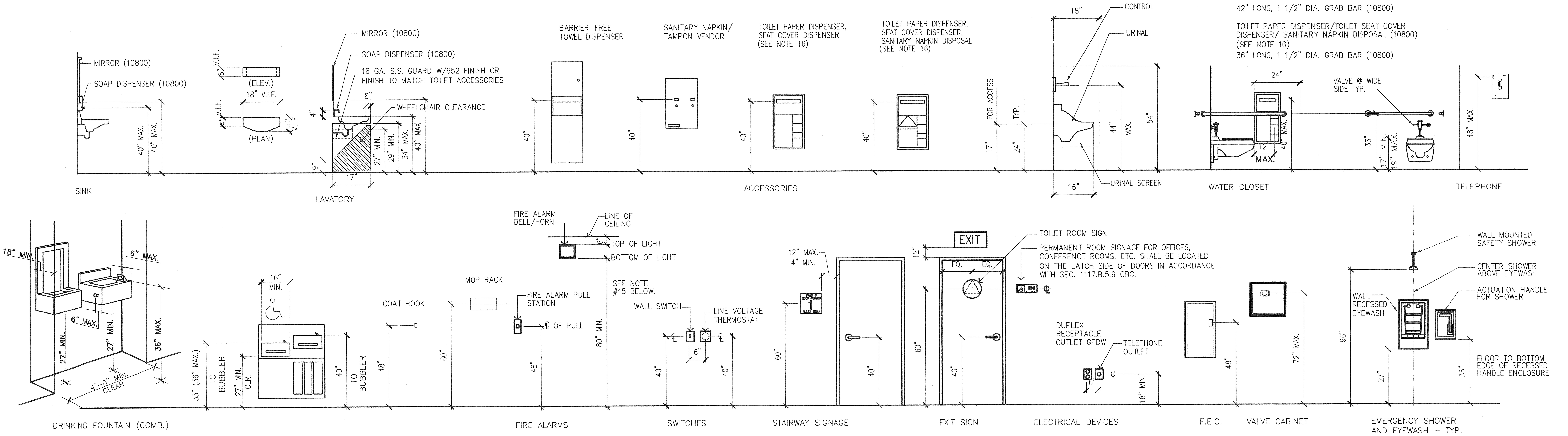

NOTE: ACCESSORIES TYPE - SEE SPECS.

Accessibility Signage

SANITARY FACILITIES (GENERAL)

1. On doorways leading to men's sanitary facilities, an equilateral triangle 1/4 inch thick with edges 12-inches long and a vertex pointing upward shall be provided and on doorways leading to women's sanitary facilities a circle 1/4 inch thick and 12-inches in diameter shall be provided. These geometric symbols shall be centered on the door at a height of 60-inches and their color and contrast shall be distinctly different from the color and contrast of the door.

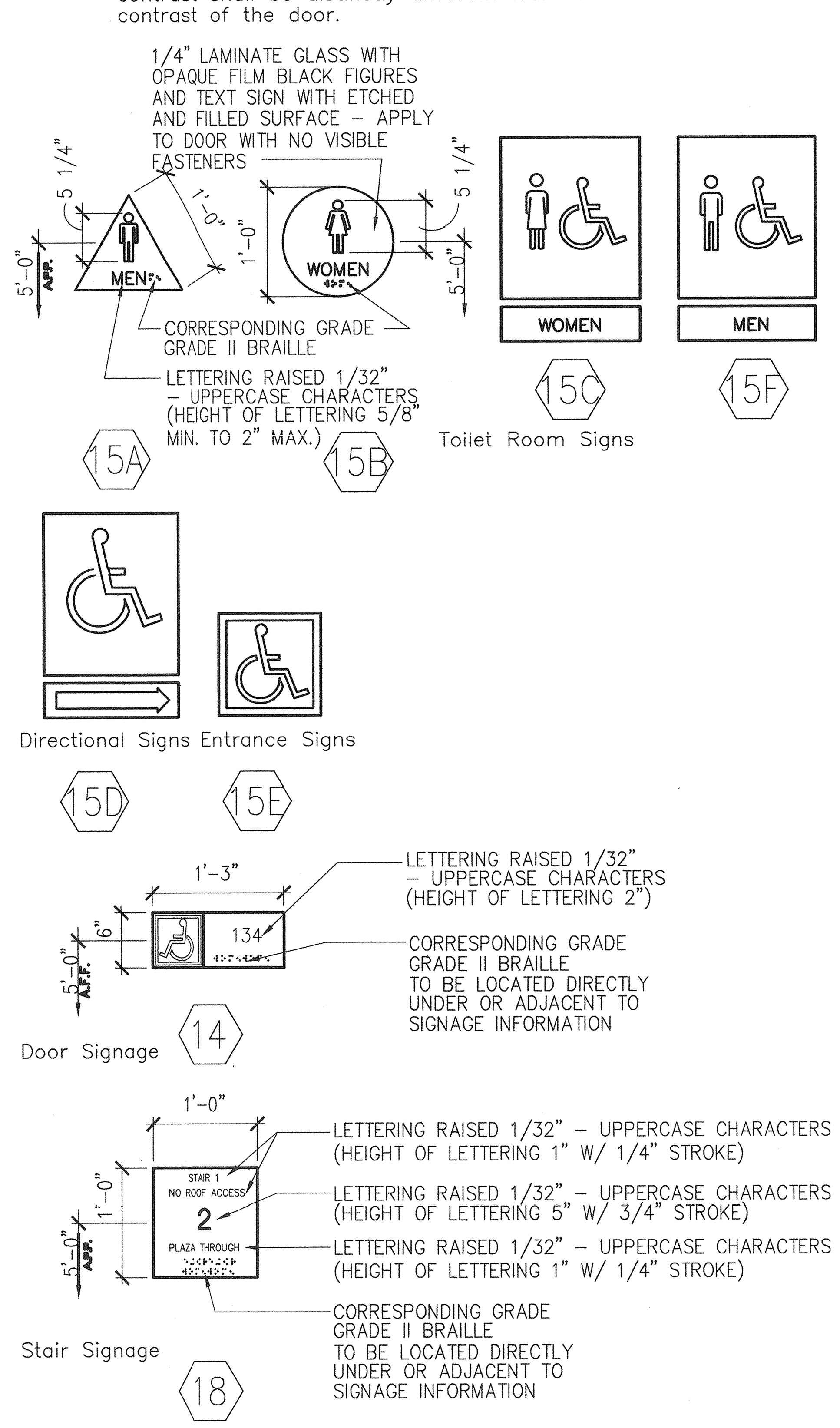

Accessibility Notes

ENTRANCES

2. Latching and locking doors that are hand activated and which are in a path of travel, shall be operable with a single effort by lever type hardware, panic bars, push-pull activating bars, or other hardware designed to provide passage without requiring the ability to grasp the opening hardware.

3. The floor or landing shall be not more than 1/2-inch lower than the threshold of the doorway. change in level between 1/4-inch and 1/2-inch shall be beveled with a slope no greater than 1:2.

4. The bottom 10-inches of all doors except automatic and sliding shall have a smooth uninterrupted surface to allow the door to be opened by a wheelchair footrest without creating a trap or hazardous condition. Where narrow frame doors are used, a 10-inch high smooth panel shall be installed on the push side of the door, which will allow the door to be opened by a wheelchair footrest without creating a trap or hazardous condition.

5. Maximum effort to operate doors shall not exceed 8-1/2 lbs for exterior doors and 5 lbs for interior doors, Such pull or push effort being applied at right angles to hinged doors and at the center plane of sliding or folding doors. Compensating devices or automatic door operators may be utilized to the above standards. When fire doors are required, the maximum effort to operate the door may be increased not to exceed 15 lbs.

FLOORS AND LEVELS

6. In building and facilities, floors of a given story shall be a common level throughout, or shall be connected by pedestrian ramps, passenger elevators or special access lifts.

TOILET ROOM FIXTURES AND ACCESSORIES

7. All toilet fixtures and accessories shall comply with the Campus Standards and Design Criteria Manual.

8. The height of accessible water closets shall be a minimum of 17 inches and a maximum of 19 inches measured to the top of the toilet seat. Provide 18-inches from the centerline of the water closets and lavs to the adjacent walls.

9. Toilet flush controls shall be operable with one hand, and shall not require tight grasping, pinching or twisting of the wrist. Controls for the flush valves shall be mounted on the wide side of the toilet areas, no more than 44-inches above the floor. The force required to activate controls shall be no greater than 5 pounds.

10. Lavatories shall be mounted with a clearance of at least 29-inches from the floor to the bottom of the apron with knee clearance under the front lip extending a minimum of 30-inches in width with 8-inches minimum depth at the top. Toe clearance shall be the same width and shall be a minimum of 9-inches high from the floor and a minimum of 17-inches deep from the front of the lavatory.

11. A projection of a lavatory bowl into the 8-inch clear space, thereby reducing the clear height below the lavatory to no less than 27-inches at 8-inches back from the apron, meets the requirement for providing knee clearance. A maximum height of 34-inches to the top of the lavatory is recommended.

12. Hot water and drain pipes under lavatories shall be insulated or otherwise covered. There shall be no sharp or abrasive surfaces under lavatories.

13. Faucet controls and operating mechanisms shall be operable with one hand and shall not require tight grasping, pinching or twisting of the wrist. The force required to activate controls shall be no greater than 5 lbs. Lever-operated, push-type and electronically controlled mechanisms are examples of acceptable designs. Self-closing valves are allowed if the faucet remains open for at least 10 seconds.

14. Mirrors shall be mounted with the bottom edge not more than 40" from the floor.

15. Locate towel, sanitary napkin, and waste receptacles with all operable parts not more than 40-inches from the floor.

16. Locate toilet tissue dispensers on the wall within 12 inches of the front edge of the toilet seat. For accessible stalls, limit the projection of the surface or semi-surface mounted accessory from encroaching more than three inches from the face of the wall or partition, and no closer than one and one-half inches to the tangent point of the grab bar.

17. Grab bars, tub and shower seats, fasteners and mounting devices shall be designed for 250 lb. per linear ft. load.

GRAB BARS

18. Grab bars shall be located on each side, or one side and the back of the physically disabled toilet stall or compartment and shall be securely attached 33 inches above and parallel to the floor.

19. Grab bars at the side shall be at least 42-inches long with the front end positioned 24-inches in front of the water closet stool, and grab bars at the back shall be not less than than 36 inches long.

20. The diameter or width of the gripping surfaces of a grab bar shall be 1-1/4 inches to 1-1/2 inches or the shape shall proved an equivalent gripping surface.

21. If the grab bars are mounted adjacent to a wall, the space between the wall and the grab bars shall be 1-1/2 inches.

22. A grab bar and any wall or other surface adjacent to it shall be free of any sharp or abrasive elements.

23. Grab bars shall not rotate within their fittings.

24. Edges shall a have minimum radius of 1/8-inch.

ADDITIONAL REQUIREMENTS

25. The center of receptacle outlets shall be not less than 15 inches above the floor or working platform.

26. The center of the grip of the operating handle of switches intended to be used by the occupant of the room or area to control lighting and receptacle outlets, appliances, or cooling, heating and ventilating equipment shall be not less than 3 feet nor more than 4 feet above the floor or working platform.

27. The center of fire alarm initiating devices (boxes) shall be located 48 inches above the level of the floor, working platform, ground surface or sidewalk.

28. The International Symbol of Accessibility shall be the standard used to identify facilities that are accessible to and usable by physically disabled persons as set forth in these building standards. The symbol specified above shall consist of a white figure on a blue background. The blue shall be equal to Color No. 15090 in Federal Standard 595b.

29. If emergency warning systems are required they shall activate a means of warning the hearing impaired. Flashing visual warning shall have a frequency of not more than 60 flashes per minute.

30. Permanent Room Signage: (1998 CBC)
Raised characters and pictorial symbol signs. When raised characters or symbols are used, they shall conform to the following:

A. Letter type. Letters and numbers on signs shall be raised 1/32 inch minimum and shall be sans-serif upper case characters accompanied by Grade 2 Braille.

B. Symbol size. Raised characters or symbols shall be a minimum of 5/8 inch high.

C. Pictorial symbol signs (pictograms). Pictorial symbol signs (pictograms) shall be accompanied by the equivalent verbal description placed directly below the pictogram. The border dimension of the pictogram shall be a minimum of 6 inches in height.

D. Braille Symbols- Contracted grade 2 braille shall be used wherever Braille symbols are specifically required in other portions of these standards. Dots shall be 1/10 inch (25.4mm) on centers in each cell with 2/10 inch (5.08 mm) space between cells. Dots shall be raised a minimum of 1/40 inch (0.0635 mm) above the background, per Section 1117B.5.2

Mounting location and height. Where permanent identification is provided for rooms and spaces, raised letters shall be accompanied by Braille in conformance with Section 1117B.5.6. Signs shall be installed on the wall adjacent to the latch outside the door. Where there is no wall space on the latch side, including at double leaf doors, signs shall be placed on the nearest adjacent wall, preferably on the right. Mounting height shall be 60 inches above the finish floor to the center line of the sign. Mounting location shall be determined so that a person may approach within 3 inches of signage without encountering protruding objects or standing within the swing of a door.

Note: See also Section 1117B.5. for additional signage applicable to sanitary facilities.

Height of work surfaces: The tops of tables and counters shall be 28 inches to 34 inches from the floor or ground.

Where a single counter contains more than one transaction station, such as (but not limited to) a bank counter with multiple teller windows or a retail sales counter with multiple cash register stations, at least 5 percent, but never less than one, of each type of station shall be located at a section of counter that is at least 36 inches long and no more than 28 to 34 inches high.

GROUND AND FLOOR SURFACES

31. General. Ground and floor surfaces along accessible routes and in accessible rooms and spaces, including floors, walks, ramps stairs, and curb ramps, shall be stable, firm and slip resistant, and shall comply with this section.

32. For changes in level up to 1/4 inch (6mm) vertical and without edge treatment, see Figure No. 11B-5E(c). Changes in level between 1/4 inch and 1/2 inch shall be accomplished by means of a ramp that complies with Fig. No. No. 11B-5E (d).

33. If carpet or carpet tile is used on a ground or floor surface, than it shall be securely attached; have a firm cushion, pad or backing or no cushion or pad; and have a level loop, textured loop, level-cut pile, or level-cut / uncut pile texture. The maximum pile height shall be 1/2 inch. Exposed edges of carpet shall be fastened to floor surfaces and have trim along the entire length of the exposed edge. Carpet edge trim shall comply with section 1124B.3.

34. Hand-activated door hardware shall be centered between 30 inches (762 mm) and 44" (1118 mm) above the floor. Latching and locking doors that are hand-activated and which are in a path of travel shall be operable with a single effort by lever-type hardware, panic bars, push-pull activating bars, or other hardware designed to provide passage without requiring the ability to grasp the opening hardware. Locked exit doors shall operate as shown in egress direction, per Section 1133B.2.5.1 Note exit doors shall be openable from the inside wihout the use of key or any special knowledge or effort.

35. The floor landing shall not be more than 1/2 inch (13 mm) lower than the threshold of the doorway. Change in level between 1/4 inch (6.4 mm) and 1/2 inch (13 mm) shall be beveled with a slope no greater than 1 unit vertical in 2 units horizontal (50 percent slope). Change in level greater than 1/2 inch (13 mm) shall be accomplished by means of a ramp, per Section 1133B.2.4.1

36. Minimum maneuvering clearances at doors shall be as shown in figure 10-2. The floor or ground area within the required clearances shall be level and clear.

37. The level area shall have a length in the direction of door swing of at least 60 inches (1564 mm) and the length opposite the direction of door swing of 48 inches (1219 mm) as measured at right angles to the door in its closed position, per Section 1133B.2.4.2 and Fig.11B-26A

38. The width of level area on the side to which the door swings shall extend 24 inches (610 mm) past the strikes edge of the door for exterior doors and 18 inches (457 mm) past the strike edge for interior doors, per Section 1133B.24.3 and fig. 11B-26A.

39. It is hearby understood that the facility must maintain its regular services, including all exits, during the time this work is in progress.

STROBE LIGHTS

40. The lamp shall be a xenon strobe type or equivalent.

41. The color shall be clear or normal white (i.e. unfiltered or clear filtered white light).

42. The maximum pulse duration shall be two-tenths of one second (0.2 sec) with a maximum duty cycle of 40 percent. The pulse duration is defined as the time interval between initial and final points of 10 percent of maximum signal.

43. Simplex strobe are 15cd, 30cd, and 110cd. 15cd should be in corridors and room 20'x20'. Refer to NFPA 72 for candula rating.

44. The flash rate shall be a minimum of 1 Hz and a maximum of 3 Hz.

45. The appliance shall be placed 80 inches above the highest floor level within the space or 6 inches below the ceiling, whichever is lower. Contractor shall cordinate with architect on location and color of back plate (typically white).

46. In general, no place in any room or space required to have a visual signal appliance shall be more than 50 feet from the signal (in the horizontal plane). In large rooms and spaces exceeding 100 feet across, without obstructions 6 feet above the finish floor, such as auditoriums, devices may be placed around the perimeter, spaced at a maximum 100 feet apart.

CARRIER JOHNSON

ARCHITECTURE
INTERIOR DESIGN
PLANNING

GORDON R. CARRIER AIA
MICHAEL C. JOHNSON AIA

WILLIAM C. BOCKEN AIA
DEBORAH P. ELLIOTT IIDA

2600 MICHELSON DRIVE
SUITE 400
IRVINE, CALIFORNIA
92612

TEL 949 955-2353
FAX 949 955-2377

1301 THIRD AVENUE
SAN DIEGO, CALIFORNIA
92101

TEL 619 239-2353
FAX 619 239-6227

RECORD DOCUMENTS

THESE DOCUMENTS RELEASED BY CARRIER JOHNSON FOR USE AS RECORD DOCUMENTS WILL SHOW THE REPORTED LOCATION OF THE WORK AND SIGNIFICANT CHANGES MADE DURING THE CONSTRUCTION PROCESS, AND ARE BASED ON UNVERIFIED INFORMATION PROVIDED BY THE CONTRACTOR AND OTHER PARTIES WHICH WILL BE ASSUMED RELIABLE. CARRIER JOHNSON CANNOT AND DOES NOT WARRANT THE ACCURACY AND/OR COMPLETENESS OF THIS INFORMATION AND SHALL NOT BE RESPONSIBLE FOR ANY ERRORS OR OMISSIONS WHICH MAY BE INCORPORATED THEREIN AS A RESULT. FUTURE CONSTRUCTION PLANNING MUST INCLUDE FIELD CONFIRMATION OF EXISTING CONDITIONS.

ONTARIO PD:: HEADQUARTERS

2534 S. ARCHIBALD AVE., ONTARIO, CALIFORNIA 91761

F13 Field Order #13 07.01.03
5 Addendum 5 04.21.2003
3 Addendum 3
2 Addendum 2/Bldg. Dept. Re-Submittal 03.20.2003
Building Dept. Submittal 02.24.2003
ISSUES:

DIRECTORY/FILE NUMBER: 4511.00
4511-A04
XREF'S DRAWINGS:
PROJECT NUMBER: 4511.00
DRAWN BY: CHECKED BY:
DATE: 1/23/03
SCALE:

TITLE:
MOUNTING HEIGHTS AND ACCESSORIES

DRAWING NO:
A0.4 2

ALL IDEAS, DESIGN, ARRANGEMENTS AND PLANS INDICATED OR REPRESENTED BY THIS DRAWING ARE OWNED BY, AND THE PROPERTY OF CARRIER JOHNSON AND WERE CREATED, EVOLVED AND DEVELOPED FOR USE ON, AND IN CONNECTION WITH THIS PROJECT. NONE OF SUCH IDEAS, DESIGN, ARRANGEMENTS, OR PLANS SHALL BE USED BY, OR DISCLOSED TO, ANY PERSON, FIRM OR CORPORATION FOR ANY PURPOSE WHATSOEVER, EXCEPT BY WRITTEN AGREEMENT WITH CARRIER JOHNSON. FILING THESE DRAWINGS OR SPECIFICATIONS WITH ANY PUBLIC AGENCY IS NOT A PUBLICATION OF SAME. NO COPYING, REPRODUCTION OR USE THEREOF IS PERMISSIBLE WITHOUT THE CONSENT OF CARRIER JOHNSON.

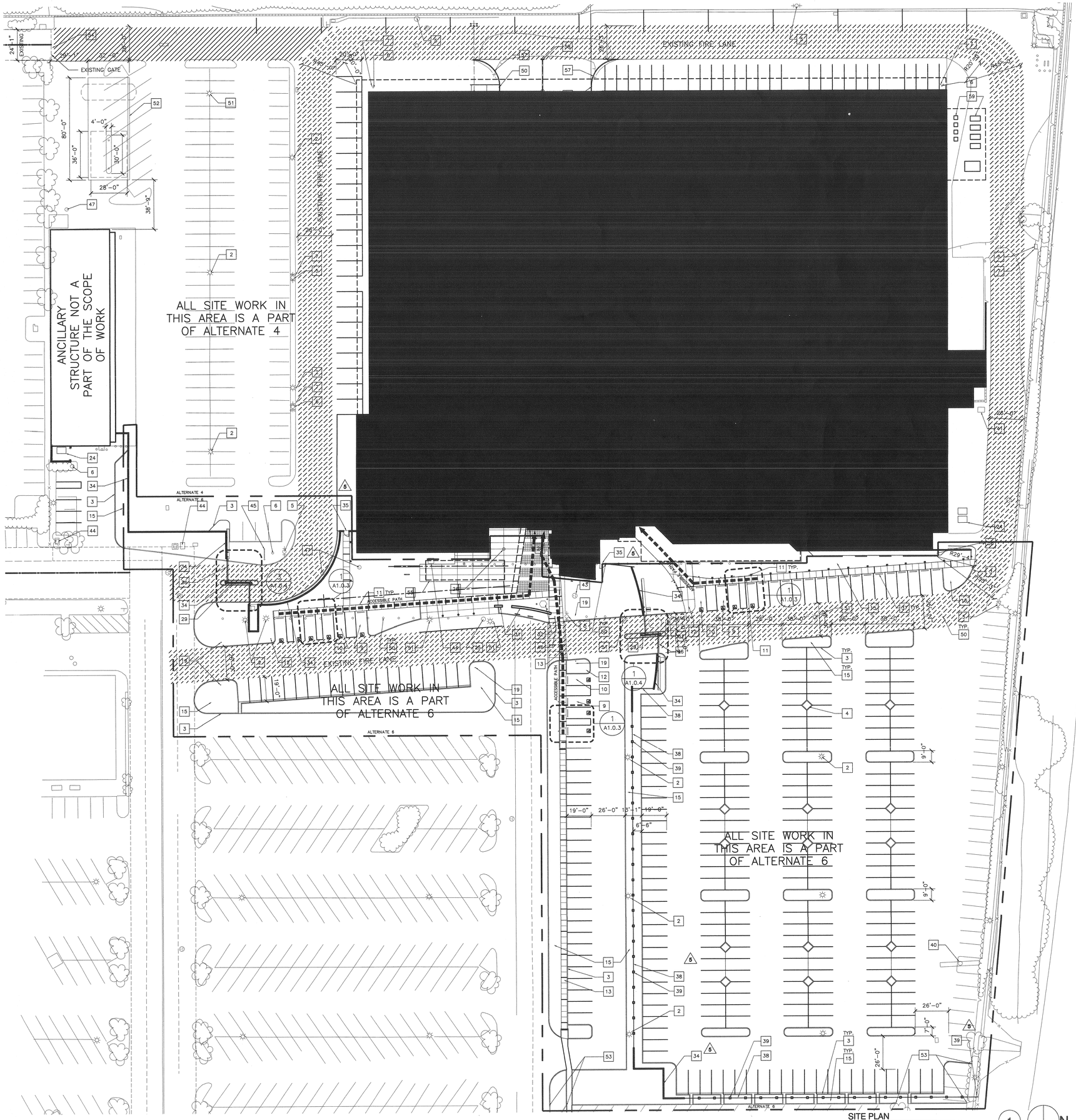

SITE PLAN KEY NOTES

1. NEW LIGHT POLE PER ELECTRICAL
2. EXISTING LIGHT POLE TO REMAIN
3. NEW CONCRETE CURB
4. NEW CONCRETE CURB CUT
5. EXISTING FIRE HYDRANT TO REMAIN, PROVIDE MARKERS (BLUE DOTS) PER ONTARIO FIRE DEPARTMENT REQUIREMENTS
6. EXISTING FIRE CONTROL VALVE TO REMAIN
7. EXISTING STEEL PIPE BOLLARDS TO REMAIN
8. ACCESIBLE PATH OF TRAVEL
9. ACCESSIBLE PARKING SPACE
10. VAN ACCESSIBLE PARKING SPACE
11. ACCESSIBLE PARKING SIGNAGE (3 / A-1.0.3)
12. ACCESSIBILITY SIGNAGE (5 / A-1.0.3)
13. CONCRETE PAVING PER PAVING PLANS
14. ASPHALT PAVING PER CIVIL
15. PLANTER AREA PER LANDSCAPE
16. DETECTABLE WARNING SURFACE CONSISTING OF RAISED TRUNCATED DOMES
17. CONCRETE SEAT WALL
18. NEW CONCRETE SLAB AT SALLYPORT
19. FIRE LANE SIGNAGE (2 / A-1.0.3)
20. PAINTEDRED CURB PER ONTARIO FIRE DEPARTMENT STANDARDS
21. PUBLIC TELEPHONE
22. TRASH ENCLOSURE
23. CONCRETE APRON IN FRONT OF TRASH ENCLOSURE
24. TRASH AND RECYCLE BINS PROVIDED BY OTHERS
25. EXISTING FLAGPOLE TO BE RELOCATED
26. RELOCATED FLAG POLE
27. PAINTED STEEL RAIL
28. KNOX BOX
29. KNOX KEY SWITCH
30. SPACE FOR UNIVERSITY SUPPLIED AND INSTALLED SPOTTING RIG.
31. ENTRY SIGN WALL
32. RELOCATED MONUMENT
33. NOT USED
34. CMU SITE WALL (5)
35. PAINTED STEEL AND ACRYLIC PANEL GATE (5)
36. PAINTED STEEL AND ACRYLIC PANEL ROLLING GATES TO MATCH HEIGHT OF ADJACENT WALL (5)
37. WHEEL-STOP SEE DET (12 / A1.0.3)
38. PAINTED STEEL ENCLOSURE FENCE (5)
39. CMU PILASTER (5)
40. EXISTING MONUMENT SIGN TO REMAIN
41. EXISTING TRANSFORMER TO REMAIN
42. EXISTING UTILITY METER TO REMAIN
43. EXISTING UTILITY MANHOLE TO REMAIN
44. EXISTING UTILITY VAULT TO REMAIN
45. EXISTING BACKFLOW PREVENTER TO REMAIN
46. EXISTING BACKFLOW PREVENTER TO BE RELOCATED
47. EXISTING UTILITY VALVE TO REMAIN
48. EXISTING UTILITY VALVE TO BE RELOCATED
49. EXISTING CHAIN LINK FENCING TO BE REMOVED
50. EXISTING STEEL PIPE BOLLARD OR ACCESSIBILITY SIGNAGE TO BE REMOVED
51. EXISTING LIGHT POLE TO BE REMOVED
52. FUELING STATION BY OTHERS
53. TIE NEW CURB INTO EXISTING CURB
54. EXISTING GATES TO REMAIN
55. NEW CANOPY
56. EXISTING PLANTER TO REMAIN
57. EXISTING PIPE RAIL TO REMAIN
58. NEW WALL AND STEEL BOLLARD PER CIVIL
59. CONCRETE EQUIPMENT PADS (16 / A1.0.3)

GENERAL NOTES

1. PATH OF TRAVEL (P.O.T) AS INDICATED IS A BARRIER FREE ACCESS WITHOUT ANY ABRUPT VERTICAL CHANGES EXCEEDING 1/2" AT 1:2 MAX. SLOPE, EXCEPT THAT LEVEL CHANGES DO NOT EXCEED 1/4" VERTICAL MAX. CROSS-SLOPE 2% TYPICAL. THE CONTRACTOR SHALL VERIFY THAT ALL BARRIERS ON THE INDICATED P.O.T. HAVE BEEN REMOVED. SEE CIVIL DWGS FOR ADDITIONAL INFO.
2. PROVIDE H.C.A. SIGNAGE ALONG P.O.T. AT MAJOR JUNCTIONS.
3. ALL RAMPS TO HAVE MEDIUM BROOM FINISH, TYP.
4. COORDINATE DIMENSIONAL LAYOUT POINTS WITH CIVIL DRAWINGS.

CARRIER JOHNSON

ARCHITECTURE
INTERIOR DESIGN
PLANNING

GORDON B. CARRIER AIA
MICHAEL C. JOHNSON AIA

WILLIAM C. BOCKEN AIA
DEBORAH F. ELLIOTT IIDA

2600 MICHELSON DRIVE
SUITE 400
IRVINE, CALIFORNIA
92612

TEL 949 955-2353
FAX 949 955-2377

1301 THIRD AVENUE
SAN DIEGO, CALIFORNIA
92101

TEL 619 239-2353
FAX 619 239-5227

RECORD DOCUMENTS

THESE DOCUMENTS RELEASED BY CARRIER JOHNSON FOR USE AS RECORD DOCUMENTS REFLECT ALL KNOWN AND RECORDED LOCATION OF THE WORK AND SIGNIFICANT CHANGES MADE DURING THE CONSTRUCTION PROCESS, AND ARE BASED ON MARK-UPS AND INFORMATION PROVIDED BY THE CONTRACTOR AND OTHER PARTIES WHICH WILL BE ASSUMED RELIABLE. CARRIER JOHNSON CANNOT AND DOES NOT WARRANT THE ACCURACY AND/OR COMPLETENESS OF THE INFORMATION AND ASSUMES NO RESPONSIBILITY FOR ANY OMISSIONS AND/OR INCONSISTENCIES WHICH MAY BE INCORPORATED THEREIN AS A RESULT. FUTURE CONSTRUCTION PLANNING MUST INCLUDE FIELD CONFIRMATION OF EXISTING CONDITIONS.

ONTARIO PD:: HEADQUARTERS

2534 S. ARCHIBALD AVE., ONTARIO, CALIFORNIA 91761

(13) Field Order #13 07.01.03
(5) Addendum 5 04.21.2003
(3) Addendum 3
(2) Addendum 2/Bldg. Dept. Re-Submittal 03.20.2003
Building Dept. Submittal 02.24.2003

ISSUES:

DIRECTORY/FILE NUMBER: 4511.00

XREF'S DRAWINGS:

PROJECT NUMBER: 4511.00

DRAWN BY: CHECKED BY:

DATE: 1/23/03

SCALE: 1"=30'

TITLE: OVERALL SITE PLAN

DRAWING NO: A1.0.0

2

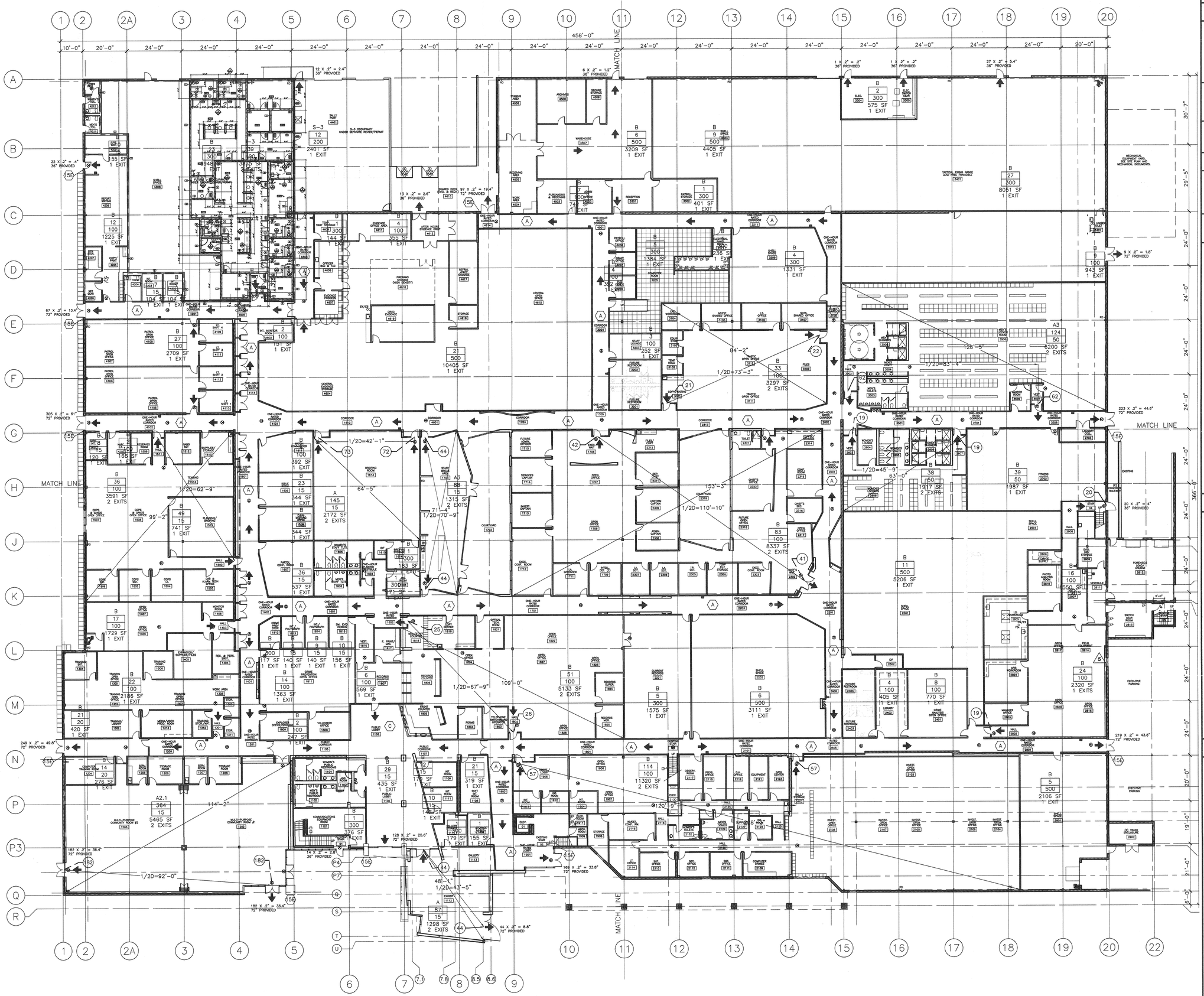

EGRESS LEGEND

SYMBOL	DESCRIPTION
OCCUP / NO / LOAD	OCCUPANCY; NO. OF OCCUPANTS; OCCUPANT LOAD FACTOR
SQFT / EX	AREA (IN SQ. FT.); # OF EXIT REQUIRED
	1 HOUR WALL
	2 HOUR OCCUPANCY SEPARATION
	CMU WALL
	EXIT PATH
(10)	COLLECTIVE OCCUPANCY ALONG PATH OF TRAVEL
F.E.C.	FIRE EXTINGUISHER CABINETS
(A)	1-HOUR RATED EXIT CORRIDOR
(B)	2-HOUR OCCUPANCY SEPARATION
(C)	NON RATED
	EXIT LIGHTS VERIFY AND MODIFY EXIT LIGHTS ACCORDINGLY, FINAL REVIEW OF EXIT LIGHTS WILL BE IN THE FIELD.

(15E) ACCESSIBLE ENTRANCE SIGNAGE
REFER TO ALL SIGNAGE REQUIREMENTS ON SHEET A.0.4.

PLAN KEY NOTES (1)

GENERAL NOTES

1. THE TOTAL WIDTH OF EXITS IN INCHES SHALL BE NO LESS THAN THE TOTAL OCCUPANT LOAD USED BY AN EXIT, MULTIPLIED BY 0.3 FOR STAIRWAYS AND 0.2 FOR OTHER EXITS. SUCH WIDTH OF EXITS SHALL BE DIVIDED APPROXIMATELY EQUALLY AMONG THE SEPARATE EXITS. THE MAXIMUM EXIT WIDTH REQUIRED FROM ANY STORY OF A BUILDING SHALL BE MAINTAINED. (U.B.C. SECTION 10032).
2. EXISTING BUILDING MULTI-RESTROOMS, STAIRS AND ELEVATORS ARE FULLY HANDICAP ACCESSIBLE. AND CURRENTLY UNDER CONTRACT FOR REMODEL. THIS WORK HAS BEEN PREVIOUSLY REVIEWED AND APPROVED BY THE CITY OF ONTARIO.
3. VERIFY RATING OF EXISTING WALLS TO REMAIN, UPDATE RATING AS REQUIRED.

ARCHITECTURE
INTERIOR DESIGN
PLANNING

CARRIER JOHNSON

GORDON R. CARRIER AIA
MICHAEL C. JOHNSON AIA

WILLIAM C. BOCKEN AIA
DEBORAH P. ELLIOTT IIDA

2600 MICHELSON DRIVE
SUITE 400
IRVINE, CALIFORNIA
92612

TEL 949 955-2353
FAX 949 955-2377

1301 THIRD AVENUE
SAN DIEGO, CALIFORNIA
92101

TEL 619 239-2353
FAX 619 239-6227

RECORD DOCUMENTS
THESE DOCUMENTS RELEASED BY CARRIER JOHNSON FOR USE AS RECORD DRAWINGS ARE BASED ON THE BEST AVAILABLE INFORMATION REGARDING THE LOCATION OF THE WORK AND SIGNIFICANT CHANGES MADE DURING THE CONSTRUCTION PROCESS, AND ARE BASED ON INFORMATION PROVIDED BY OTHERS. CARRIER JOHNSON AND OTHER PARTIES WHICH WILL BE ASSUMED RELIABLE. CARRIER JOHNSON CANNOT AND DOES NOT WARRANT THE ACCURACY OF THIS INFORMATION AND SHALL NOT BE RESPONSIBLE FOR ANY ERRORS OR OMISSIONS WHICH MAY BE INCORPORATED THEREIN AS A RESULT OF INACCURATE OR INCOMPLETE INFORMATION PROVIDED FIELD CONFIRMATION OF EXISTING CONDITIONS.

ONTARIO PD:: HEADQUARTERS

2534 S. ARCHIBALD AVE., ONTARIO, CALIFORNIA 91761

Field Order #93 07.01.03
5 Addendum 5 04.21.2003
3 Addendum 3
2 Addendum 2/Bldg. Dept. Re-Submittal 03.20.2003
Building Dept. Submittal 02.24.2003

ISSUES:
DIRECTORY/FILE NUMBER: 4511-A101
XREF'S DRAWINGS:
PROJECT NUMBER: 4511.00
DRAWN BY:
CHECKED BY:
DATE: 2/24/03
SCALE: 1/16" = 1'-0"
TITLE: FLOOR PLAN OVERALL KEY PLAN EXITING PLAN

DRAWING NO: A1.0.1

5

ALL IDEAS, DESIGN, ARRANGEMENTS AND PLANS INDICATED OR REPRESENTED BY THIS DRAWING ARE OWNED BY AND ARE THE PROPERTY OF CARRIER JOHNSON AND WERE CREATED, EVOLVED AND DEVELOPED FOR USE ON AND IN CONNECTION WITH THE SPECIFIED PROJECT. NONE OF SUCH IDEAS, DESIGNS, ARRANGEMENTS OR PLANS SHALL BE USED BY OR DISCLOSED TO ANY PERSON, FIRM, OR CORPORATION FOR ANY PURPOSE WHATSOEVER WITHOUT THE WRITTEN PERMISSION OF CARRIER JOHNSON. FILING THESE DRAWINGS OR SPECIFICATIONS WITH ANY PUBLIC AGENCY IS NOT A PUBLICATION OF SAME. NO COPYING, REPRODUCTION OR USE THEREOF IS PERMISSIBLE WITHOUT THE CONSENT OF CARRIER JOHNSON.

ALL IDEAS, DESIGNS, ARRANGEMENTS, OR PLANS SHALL BE USED BY, OR DISCLOSED TO ANY PERSON, FIRM, OR CORPORATION FOR ANY PURPOSE WHATSOEVER WITHOUT THE WRITTEN PERMISSION OF CARRIER JOHNSON. FILING THESE DRAWINGS OR SPECIFICATIONS WITH ANY PUBLIC AGENCY IS NOT A PUBLICATION OF SAME. NO COPYING, REPRODUCTION OR USE THEREOF IS PERMISSIBLE WITHOUT THE CONSENT OF CARRIER JOHNSON.

EGRESS LEGEND

SYMBOL	DESCRIPTION
OCCUP / NO / LOAD	OCCUPANCY; NO. OF OCCUPANTS; OCCUPANT LOAD FACTOR
SQFT / EX	AREA (IN SQ. FT.); # OF EXIT REQUIRED
	1 HOUR WALL
	2 HOUR OCCUPANCY SEPARATION
	CMU WALL
	EXIT PATH
(10)	COLLECTIVE OCCUPANCY ALONG PATH OF TRAVEL
F.E.C.	FIRE EXTINGUISHER CABINETS
(A)	1-HOUR RATED EXIT CORRIDOR
(B)	2-HOUR OCCUPANCY SEPARATION
(C)	NON RATED
⊗	EXIT LIGHTS VERIFY AND MODIFY EXIT LIGHTS ACCORDINGLY, FINAL REVIEW OF EXIT LIGHTS WILL BE IN THE FIELD.
(15E)	ACCESSIBLE ENTRANCE SIGNAGE REFER TO ALL SIGNAGE REQUIREMENTS ON SHEET A.0.4.

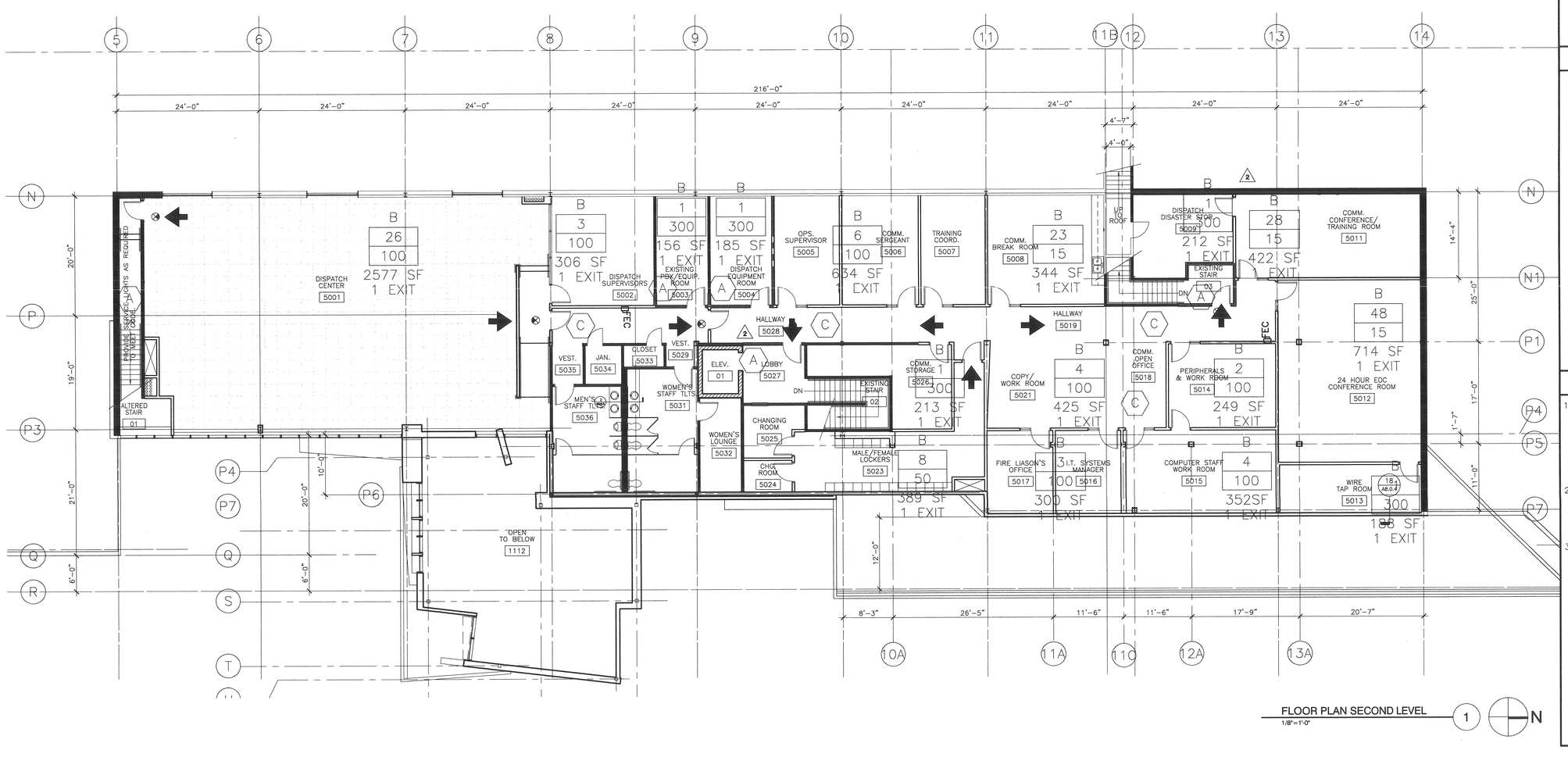

FLOOR PLAN SECOND LEVEL 1
1/8"=1'-0"

PLAN KEY NOTES

GENERAL NOTES

1. THE TOTAL WIDTH OF EXITS IN INCHES SHALL BE NO LESS THAN THE TOTAL OCCUPANT LOAD USED BY AN EXIT, MULTIPLIED BY 0.3 FOR STAIRWAYS AND 0.2 FOR OTHER EXITS. SUCH WIDTH OF EXITS SHALL BE DIVIDED APPROXIMATELY EQUALLY AMONG THE SEPARATE EXITS. THE MAXIMUM EXIT WIDTH REQUIRED FROM ANY STORY OF A BUILDING SHALL BE MAINTAINED. (U.B.C. SECTION 10032).
2. EXISTING BUILDING MULTI-RESTROOMS, STAIRS AND ELEVATORS ARE FULLY HANDICAP ACCESSIBLE. AND CURRENTLY UNDER CONTRACT FOR REMODEL. THIS WORK HAS BEEN PREVIOUSLY REVIEWED AND APPROVED BY THE CITY OF ONTARIO.
3. VERIFY RATING OF EXISTING WALLS TO REMAIN, UPDATE RATING AS REQUIRED.

CARRIER JOHNSON
ARCHITECTURE
INTERIOR DESIGN
PLANNING
GORDON R. CARRIER AIA
MICHAEL C. JOHNSON AIA
WILLIAM C. BOCKEN AIA
DEBORAH P. ELLIOTT IIDA
2600 MICHELSON DRIVE
SUITE 400
IRVINE, CALIFORNIA
92612
TEL 949 955-2353
FAX 949 955-2377
1301 THIRD AVENUE
SAN DIEGO, CALIFORNIA
92101
TEL 619 239-2353
FAX 619 239-6227

RECORD DOCUMENTS
THESE DOCUMENTS RELEASED BY CARRIER JOHNSON FOR USE AS RECORD DOCUMENTS WILL REFLECT ONLY THE LOCATION OF THE WORK AND SIGNIFICANT CHANGES MADE DURING THE CONSTRUCTION PROCESS, AND ARE BASED ON UNVERIFIED INFORMATION PROVIDED TO THE CONTRACTOR AND OTHER PARTIES WHICH WILL BE ASSUMED RELIABLE. CARRIER JOHNSON CANNOT AND DOES NOT WARRANT THE ACCURACY OF SUCH DOCUMENTS, AND SHALL NOT BE RESPONSIBLE FOR ANY ERRORS OR OMISSIONS WHICH MAY BE INCORPORATED THEREIN AS A RESULT. FUTURE CONSTRUCTION PLANNING MUST INCLUDE FIELD CONFIRMATION OF EXISTING CONDITIONS.

ONTARIO PD:: HEADQUARTERS

2534 S. ARCHIBALD AVE., ONTARIO, CALIFORNIA 91761

- Field Order #13 07.01.03
- 5 Addendum 5 04.21.2003
- 3 Addendum 3
- 2 Addendum 2/Bldg. Dept. Re-Submittal 03.20.2003

Building Dept. Submittal 02.24.2003

ISSUES:
DIRECTORY/FILE NUMBER: 4511-A102
XREF'S DRAWINGS:
PROJECT NUMBER: 4511.00
DRAWN BY: CHECKED BY:
DATE: 2/24/03
SCALE: AS NOTED
TITLE: FLOOR PLAN SECOND LEVEL EXITING PLAN

DRAWING NO: A1.0.2

ALL IDEAS, DESIGN, ARRANGEMENTS, OR PLANS SHALL BE USED BY, OR DISCLOSED TO ANY PERSON, FIRM, OR CORPORATION FOR ANY PURPOSE WHATSOEVER WITHOUT THE WRITTEN PERMISSION OF CARRIER JOHNSON. NONE OF SUCH IDEAS, DESIGN, ARRANGEMENTS, OR PLANS SHALL BE USED BY, OR DISCLOSED TO ANY PERSON, FIRM, OR CORPORATION FOR ANY PURPOSE WHATSOEVER WITHOUT THE WRITTEN PERMISSION OF CARRIER JOHNSON. NO COPYING, REPRODUCTION OR USE THEREOF IS PERMISSIBLE WITHOUT THE CONSENT OF CARRIER JOHNSON. FILING THESE DRAWINGS OR SPECIFICATIONS WITH ANY PUBLIC AGENCY IS NOT A PUBLICATION OF SAME.

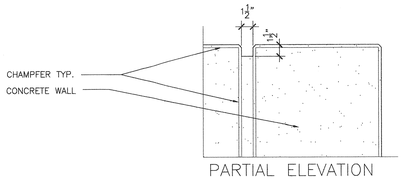

PARTIAL ELEVATION

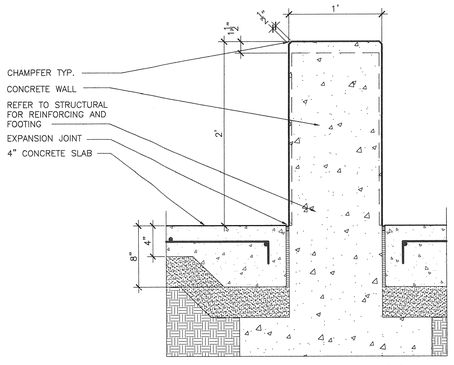

CONCRETE WALL
SCALE: 1-1/2"=1'-0" 4511E123 **24** (5)

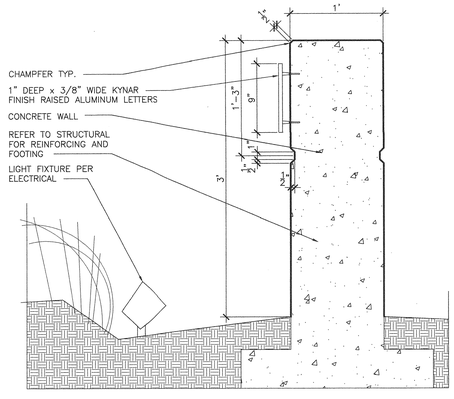

CONCRETE WALL
SCALE: 1-1/2"=1'-0" 4511E123 **25** (5)

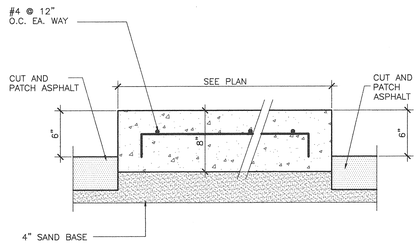

TYPICAL EQUIPMENT PAD
SCALE: 1-1/2"=1'-0" 4511E120 **16**

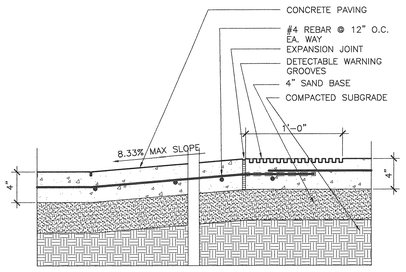

PAVING RAMP
SCALE: 1-1/2"=1'-0" 4511E121 **17** (5)

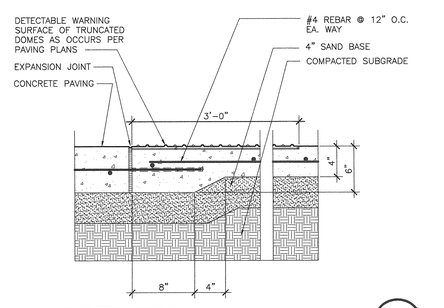

PAVING TRANSITION
SCALE: 1-1/2"=1'-0" 4511E122 **18** (5)

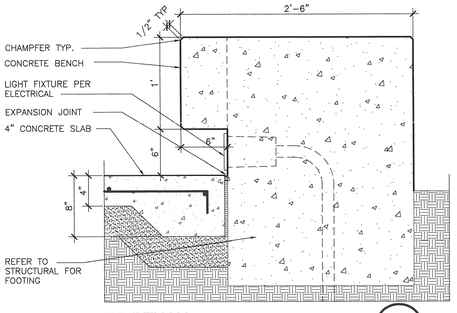

CONCRETE BENCH
SCALE: 1-1/2"=1'-0" 4511E123 **19** (5)

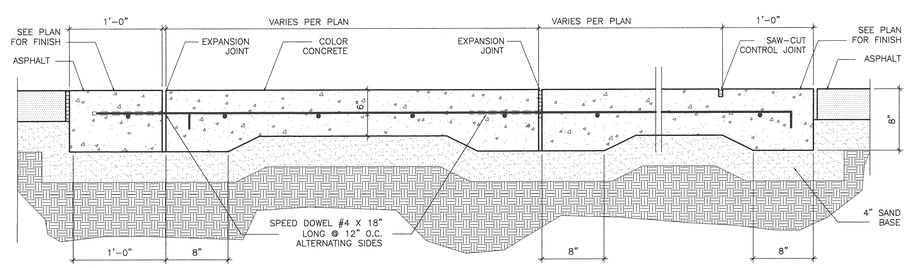

PAVED SECTION
SCALE: 1 1/2"=1'-0" 4511E101 **11**

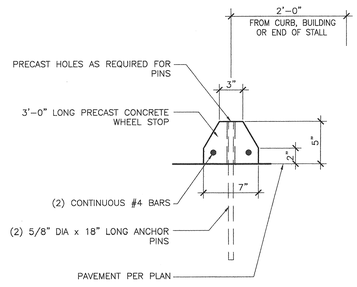

TIRE STOP N.I.C.
SCALE: 1-1/2"=1'-0" 4511E108 **12**

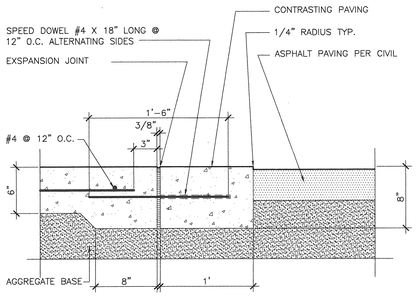

CONCRETE PAVING @ ASPHALT
SCALE: 1-1/2"=1'-0" 4511E109 **13**

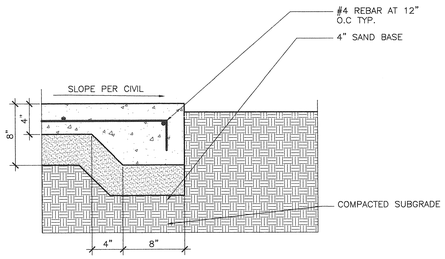

CONCRETE PAVING EDGE
SCALE: 1-1/2"=1'-0" 4511E107 **14**

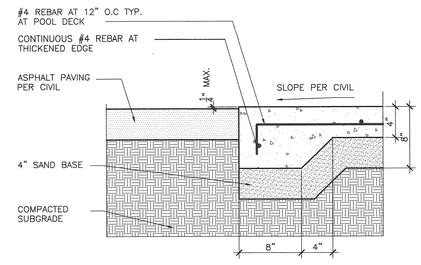

CONCRETE PAVING EDGE
SCALE: 1-1/2"=1'-0" 4511E119 **15**

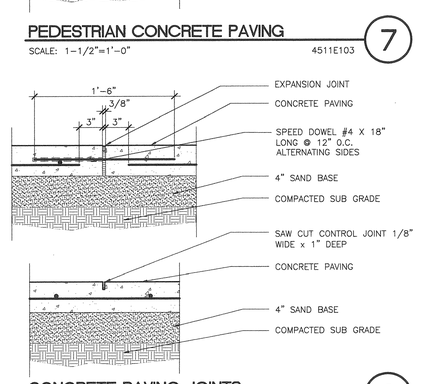

CONCRETE PAVING JOINTS
SCALE: 1-1/2"=1'-0" 4511E104 **8**

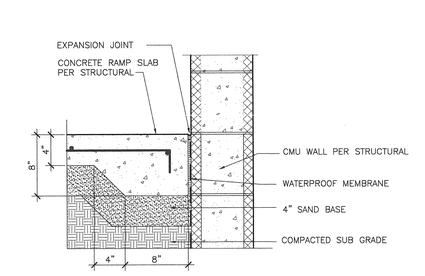

PAVING EDGE
SCALE: 1-1/2"=1'-0" 4511E105 **9**

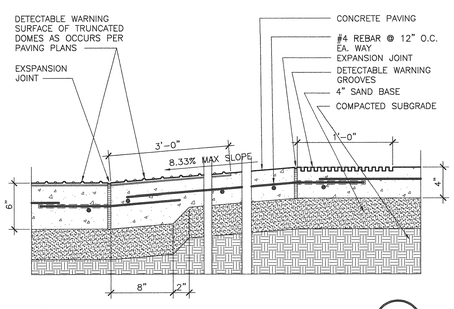

PAVING RAMP
SCALE: 1-1/2"=1'-0" 4511E106 **10** (5)

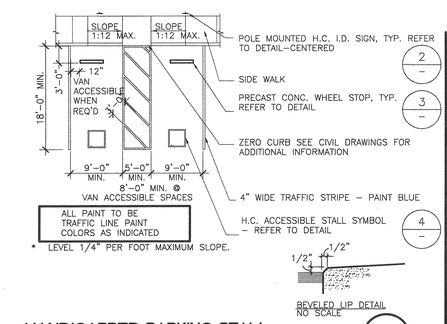

HANDICAPPED PARKING STALL
SCALE: 3/32"=1'-0" 4511E045 **1**

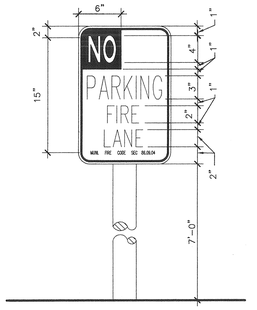

FIRE LANE SIGNAGE
SCALE: 1-1/2"=1'-0" 4511E040 **2**

HANDICAPPED PARKING SIGN
SCALE: 1-1/2"=1'-0" 4511E042 **3**

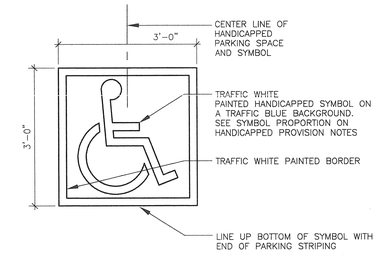

SURFACE IDENTIFICATION
SCALE: 3/4"=1'-0" 4511E044 **4**

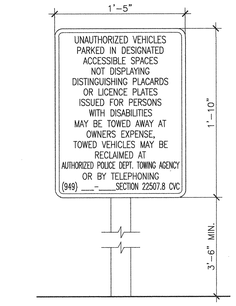

MATERIALS:
REFLECTORIZED PAINT OR PORCELAIN ON METAL

COLORS: WHITE LETTERS ON BLUE BACKGROUND EQUAL TO NO. 15090, FEDERAL STD. 595 MINIMUM 1 INCH IN HEIGHT

OPTION: SUBSTITUTE COMMERCIAL SIGN COMPLYING WITH 24 CAC SECTION 2-7102

SUPPORT: STANDARD 3" DIA. GALV. STEEL POLE WITH 2'-0" EMBEDMENT ATTACH SIGN TO POLE WITH GALV. STRAPS AT TOP AND BOTTOM

ACCESSIBILITY SIGN
SCALE: 1-1/2"=1'-0" 4511E043 **5**

CARRIER JOHNSON

ARCHITECTURE
INTERIOR DESIGN
PLANNING

GORDON R. CARRIER AIA
MICHAEL C. JOHNSON AIA

WILLIAM C. BOCKEN AIA
DEBORAH P. ELLIOTT IIDA

2600 MICHELSON DRIVE
SUITE 400
IRVINE, CALIFORNIA
92612

TEL 949 955-2353
FAX 949 955-2377

1301 THIRD AVENUE
SAN DIEGO, CALIFORNIA
92101

TEL 619 239-2353
FAX 619 239-6227

RECORD DOCUMENTS
THESE DOCUMENTS RELEASED BY CARRIER JOHNSON FOR USE AS RECORD DOCUMENTS WILL SHOW THE REPORTED LOCATION OF THE WORK AND SIGNIFICANT CHANGES MADE DURING THE CONSTRUCTION PROCESS, AND ARE BASED ON INFORMATION FURNISHED BY CONTRACTOR, SUBCONTRACTORS AND OTHER PARTIES WHICH WILL BE ASSUMED RELIABLE CARRIER JOHNSON CANNOT AND DOES NOT WARRANT THE COMPLETE ACCURACY OF THESE DOCUMENTS AND SHALL NOT BE RESPONSIBLE FOR ANY ERRORS OR OMISSIONS WHICH MAY BE INCORPORATED THEREIN AS A RESULT OF INACCURATE OR INCOMPLETE INFORMATION FURNISHED. FIELD CONFIRMATION OF EXISTING CONDITIONS

ONTARIO PD:: HEADQUARTERS
2534 S. ARCHIBALD AVE., ONTARIO, CALIFORNIA 91761

FO Field Order #03 07.01.03
5 Addendum 5 04.21.2003
3 Addendum 3
2 Addendum 2/Bldg. Dept. Re-Submittal 03.20.2003
Building Dept. Submittal 02.24.2003

ISSUES:
DIRECTORY/FILE NUMBER: 4511-A103
XREF'S DRAWINGS:
PROJECT NUMBER: 4511.00
DRAWN BY: CHECKED BY:
DATE: 1/23/03
SCALE: AS NOTED
TITLE: DETAILS

DRAWING NO: A1.0.3

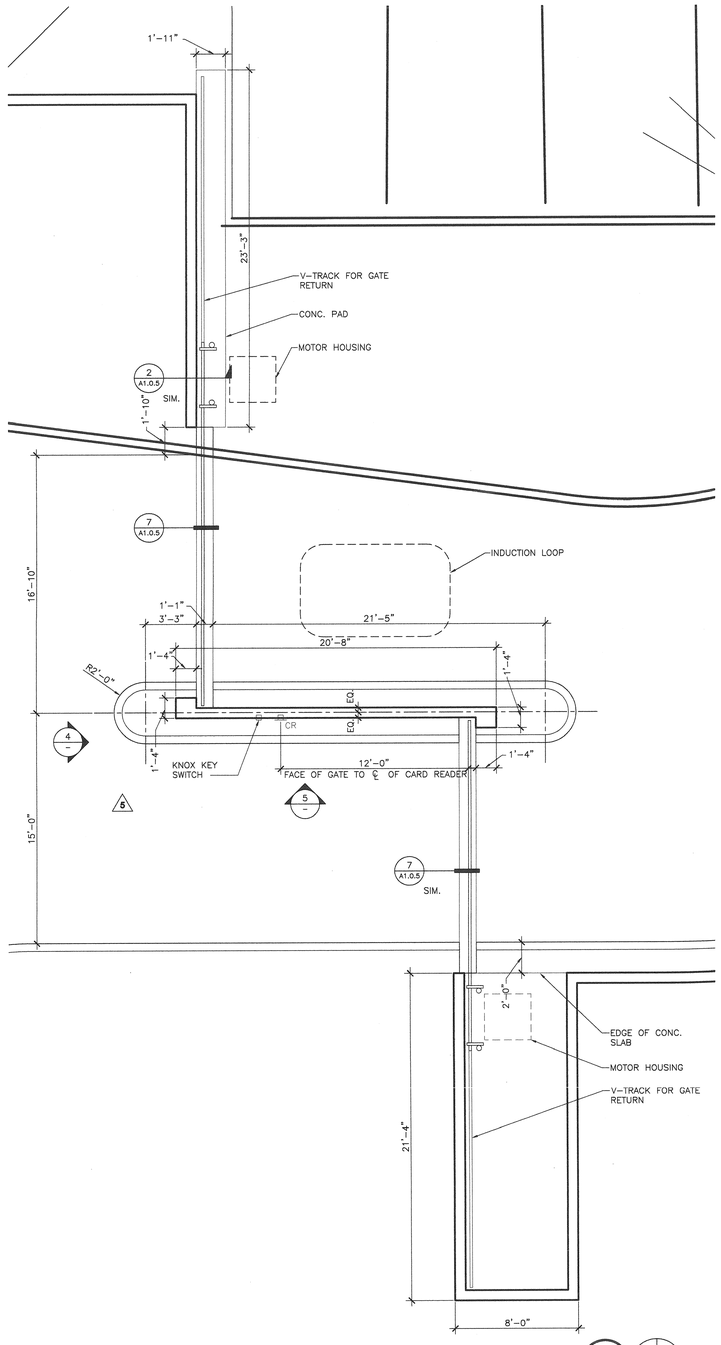

VEHICULAR ACCESS GATE NO. 2

SCALE: 1/4" = 1'-0"

3

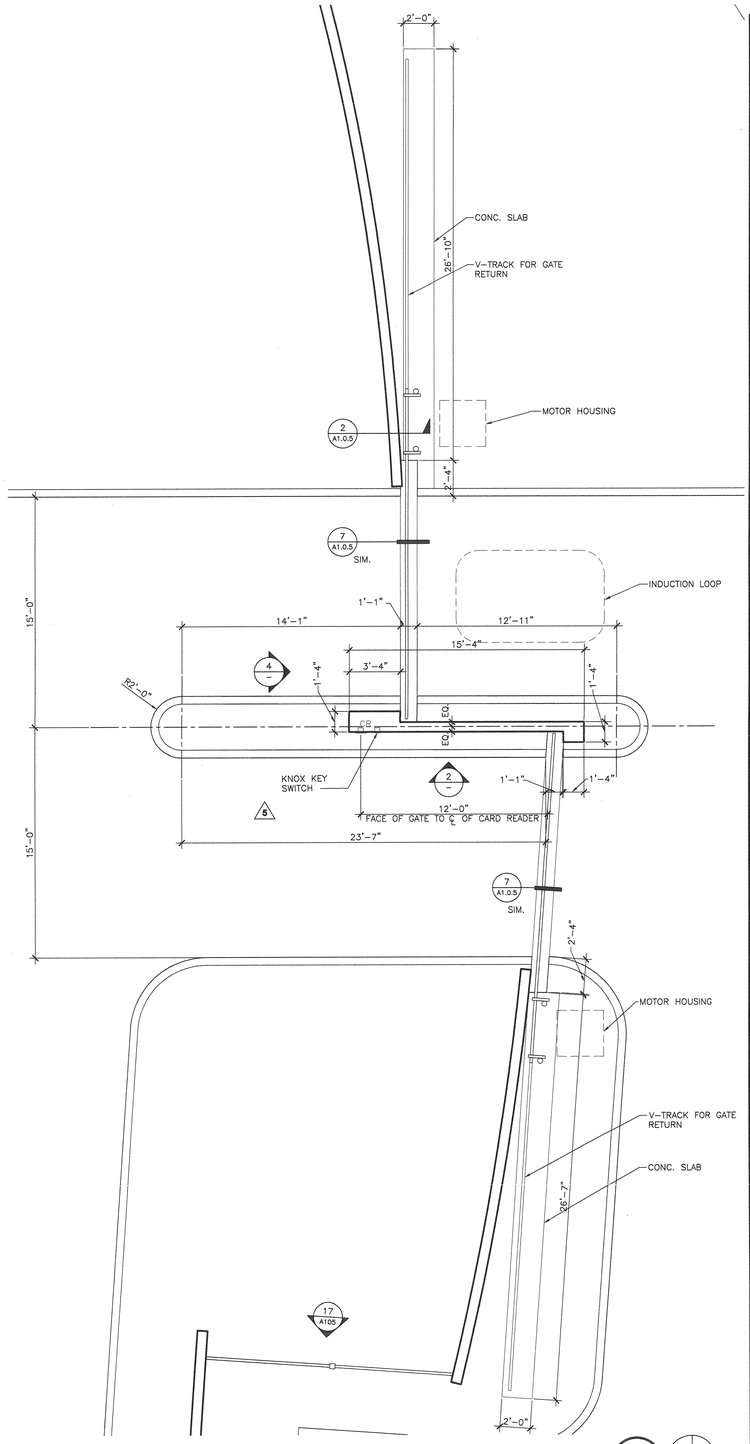

VEHICULAR ACCESS GATE NO. 1

SCALE: 1/4" = 1'-0"

1

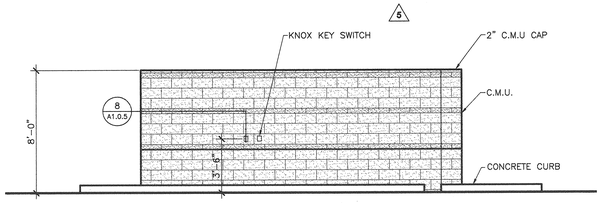

GATE NO. 2 WALL ELEVATION

SCALE: 1/4" = 1'-0"

5

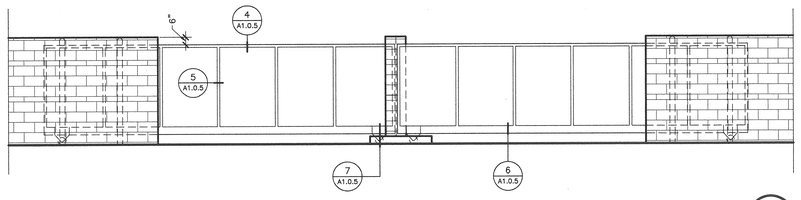

TYPICAL PARKING GATE ELEVATION

SCALE: 1/4" = 1'-0"

4

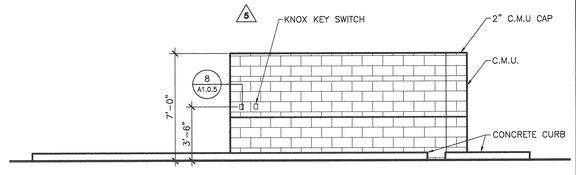

GATE NO. 1 WALL ELEVATION

SCALE: 1/4" = 1'-0"

2

ARCHITECTURE
INTERIOR DESIGN
PLANNING

CARRIER JOHNSON

GORDON R. CARRIER AIA
MICHAEL C. JOHNSON AIA

WILLIAM C. BOCKEN AIA
DEBORAH P. ELLIOTT IIDA

2600 MICHELSON DRIVE
SUITE 400
IRVINE, CALIFORNIA
92612

TEL 949 955-2353
FAX 949 955-2377

1301 THIRD AVENUE
SAN DIEGO, CALIFORNIA
92101

TEL 619 239-2353
FAX 619 239-6227

RECORD DOCUMENTS
THESE DOCUMENTS RELEASED BY CARRIER JOHNSON FOR USE AS RECORD DOCUMENTS WILL SHOW THE REPORTED LOCATION OF THE WORK AND SIGNIFICANT CHANGES MADE DURING CONSTRUCTION PROCESS. ANY RELIANCE ON UNVERIFIED INFORMATION PROVIDED BY THE CONTRACTOR AND OTHER PARTIES WHICH WILL BE ASSUMED RELIABLE IS AT SOLE RISK OF THOSE PARTIES. CARRIER JOHNSON MAKES NO GUARANTEE AS TO ACCURACY AND/OR COMPLETENESS OF THIS INFORMATION AND SHALL NOT BE RESPONSIBLE FOR ANY ERRORS OR OMISSIONS IN THE DOCUMENTS. THESE DOCUMENTS ARE NOT TO BE USED FOR BIDDING PURPOSES. ANY BIDDING PERFORMED IN RELIANCE ON THESE DOCUMENTS SHALL BE DONE WITH THE UNDERSTANDING THAT FIELD CONFIRMATION OF EXISTING CONDITIONS.

ONTARIO PD:: HEADQUARTERS

2534 S. ARCHIBALD AVE., ONTARIO, CALIFORNIA 91761

Field Order #13 07.01.03

5 Addendum 5 04.21.2003

3 Addendum 3

2 Addendum 2/Bldg. Dept. Re-Submittal 03.20.2003

Building Dept. Submittal 02.24.2003

ISSUES:

DIRECTORY/FILE NUMBER: 4511.00

XREF'S DRAWINGS:

PROJECT NUMBER: 4511.00

DRAWN BY: CHECKED BY:

DATE:

SCALE: AS NOTED

TITLE: GATE DETAILS

DRAWING NO: A1.0.4

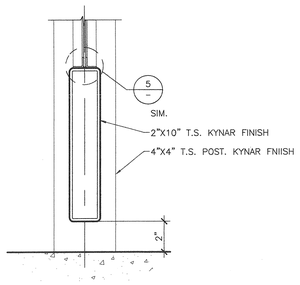

FENCE SILL

SCALE: 3" = 1'-0" 4511E100 **16**

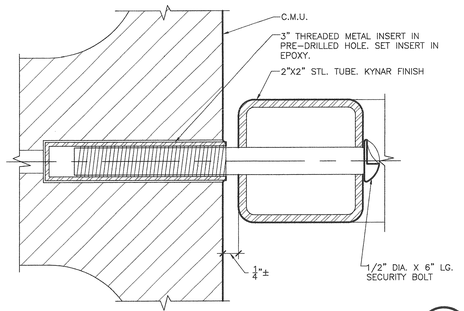

FENCE ANCHORAGE

SCALE: FULL SCALE 4511E096 **11**

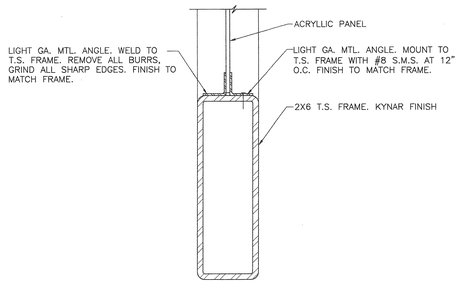

GATE SILL

SCALE: HALF SIZE 4451E091 **6**

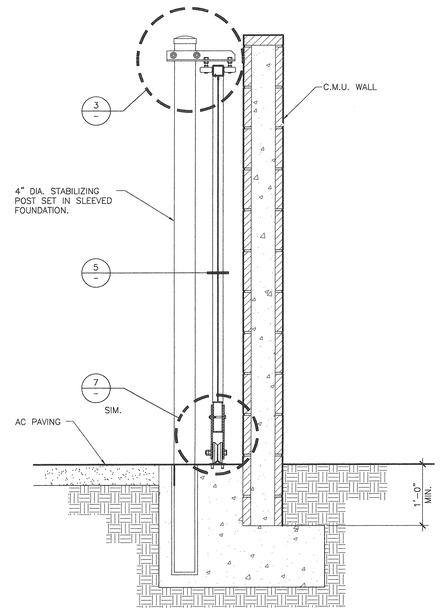

SECTION THRU PARKING GATE

SCALE: 1" = 1'-0" 4511E093 **2**

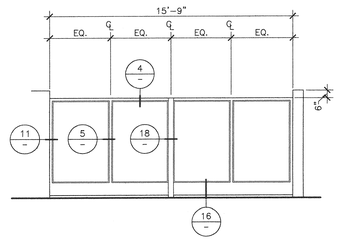

ACRYLLIC PANEL FENCE

SCALE: 1/4" = 1'-0" 4511E110 **17**

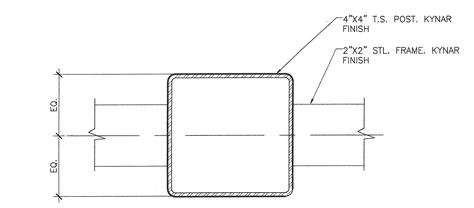

INTERMEDIATE T.S. POST

SCALE: HALF 4511E098 **12**

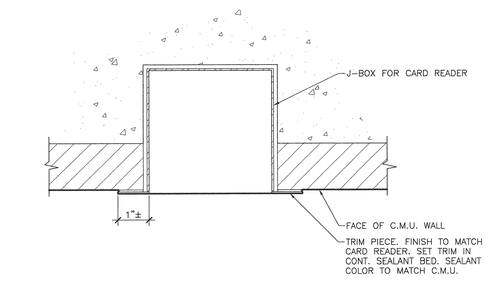

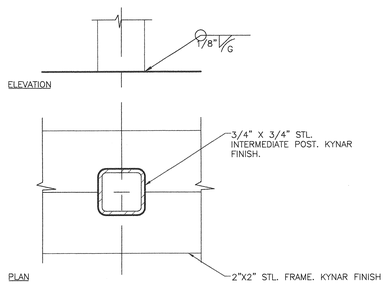

INTERMEDIATE T.S. POST

SCALE: HALF 4511E111 **18**

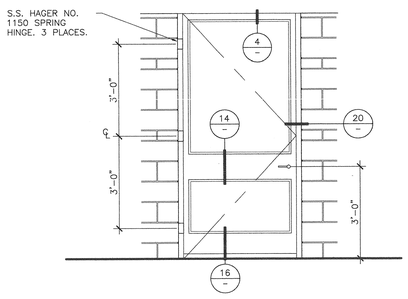

MAN GATE

SCALE: 1/2" = 1'-0" 4511E115 **19**

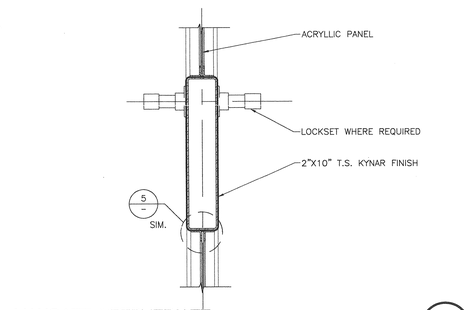

STEEL FENCE MEMBER

SCALE: FULL 4511E097 **13**

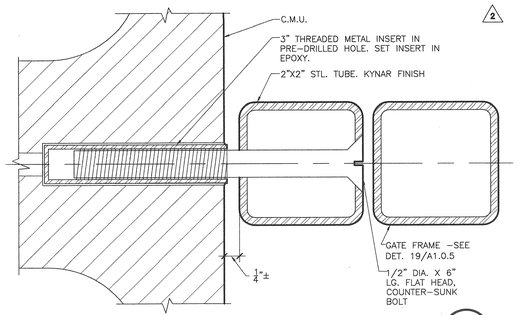

JAMB ANCHORAGE AT MAN GATE

SCALE: FULL SCALE 4511E0116 **20**

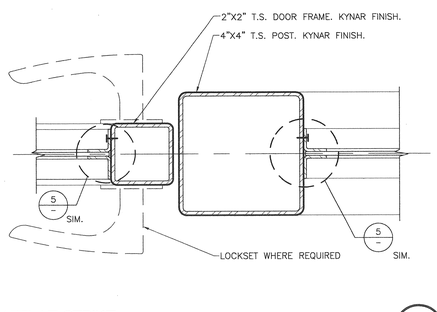

GATE AT STRIKE

SCALE: HALF 4511E099 **15**

CARD READER AT PARKING GATES

SCALE: HALF SIZE 4511E092 **8**

STEEL FENCING

SCALE: 1/2" = 1'-0" 4511E094 **9**

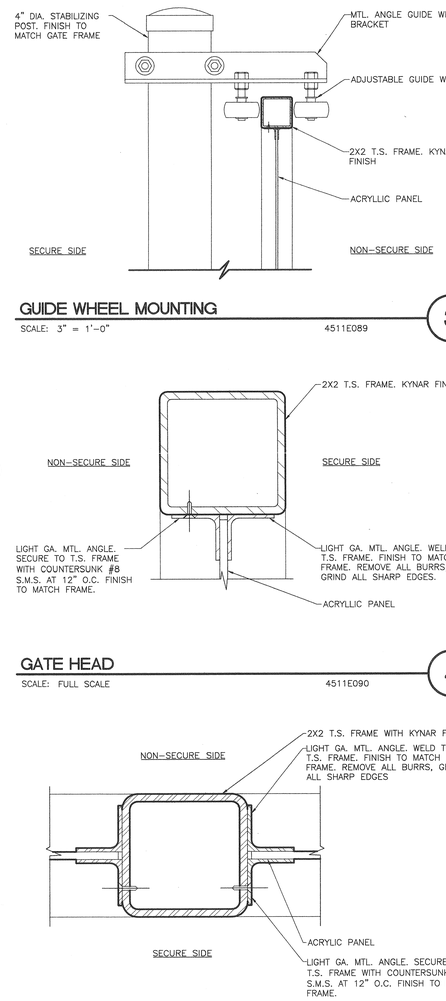

GUIDE WHEEL MOUNTING

SCALE: 3" = 1'-0" 4511E089 **3**

MANGATE INTERMEDIATE

SCALE: 3" = 1'-0" 4511E102 **14**

V TRACK AND WHEEL

SCALE: 3" = 1'-0" 4511E087 **7**

GATE HEAD

SCALE: FULL SCALE 4511E090 **4**

C.M.U. PILLASTER AT FENCE

SCALE: 3" = 1'-0" 4511E095 **10**

PANEL CONNECTION AT POST

SCALE: FULL SCALE 4511E088 **5**

CARRIER JOHNSON

ARCHITECTURE
INTERIOR DESIGN
PLANNING

GORDON R. CARRIER AIA
MICHAEL C. JOHNSON AIA

WILLIAM C. BOCKEN AIA
DEBORAH P. ELLIOTT IIDA

2600 MICHELSON DRIVE
SUITE 400
IRVINE, CALIFORNIA
92612

TEL 949 955-2353
FAX 949 955-2377

1301 THIRD AVENUE
SAN DIEGO, CALIFORNIA
92101

TEL 619 239-2353
FAX 619 239-6227

RECORD DOCUMENTS
THESE DOCUMENTS RELEASED BY CARRIER JOHNSON FOR USE AS RECORD DOCUMENTS ONLY. ALL INFORMATION SHOWN THEREON IS REPORTED LOCATION OF THE WORK AND SIGNIFICANT CHANGES MADE DURING THE CONSTRUCTION PROCESS, AND ARE BASED ON INFORMATION FURNISHED BY CONTRACTORS, SUBCONTRACTORS AND OTHER PARTIES WHICH WILL BE ASSUMED RELIABLE. CARRIER JOHNSON CANNOT AND DOES NOT WARRANT THE ACCURACY AND COMPLETENESS OF SUCH INFORMATION AND SHALL NOT BE RESPONSIBLE FOR ANY ERRORS OR OMISSIONS WHICH MAY BE INCORPORATED THEREIN AS A RESULT. FIELD CONDITIONS MAY VARY AND SHALL INCLUDE FIELD CONFIRMATION OF EXISTING CONDITIONS.

ONTARIO PD:: HEADQUARTERS

2534 S. ARCHIBALD AVE., ONTARIO, CALIFORNIA 91761

FO 1 Field Order #03 07.01.03
5 Addendum 5 04.21.2003
3 Addendum 3
2 Addendum 2/Bldg. Dept. Re-Submittal 03.20.2003
Building Dept. Submittal 02.24.2003

ISSUES:

DIRECTORY/FILE NUMBER: 4511.00

XREF'S DRAWINGS:

PROJECT NUMBER: 4511.00

DRAWN BY: CHECKED BY:

DATE:

SCALE: AS NOTED

TITLE: FENCING AND GATE DETAILS

DRAWING NO: A1.0.5

PAVING KEYNOTES

7 RED PAINTED CURBS AT FIRE LANE PER ONTARIO FIRE DEPARTMENT STANDARDS 5

1 NEW POLE LIGHT (ARCHITECTURAL AREA LIGHTING FLEX FH5 LC5XP MATT ALUMINUM FINISH) REFER TO STRUCTURAL FOR FOOTING 5

2 NEW STEP LIGHT (SISTEMALUX SPARKS WITH 1 WINDOW)

3 EXISTING CONCRETE PAVING TO REMAIN

4 SAWCUT EXISTING CONCRETE EDGE

5 CONCRETE BENCH

6 NEW STEP LIGHT (SISTEMALUX BRIQUE WALL RECESSED S4506)

PAVING LEGEND

SYMBOL	DESCRIPTION	SYMBOL	DESCRIPTION
	CONCRETE PAVING CP-1 (7 / A1.0.3)		EXSPANSION JOINT SEE (8 / A1.0.3)
	CONCRETE PAVING CP-2 (7 / A1.0.3)		CONTROL JOINT SEE (8 / A1.0.3)
	CONCRETE PAVING CP-3 (7 / A1.0.3)		RED PAINTED CURBS AT FIRE LANE PER ONTARIO FIRE DEPARTMENT STANDARDS 3
	TILE BAND (7 / A1.0.3)		

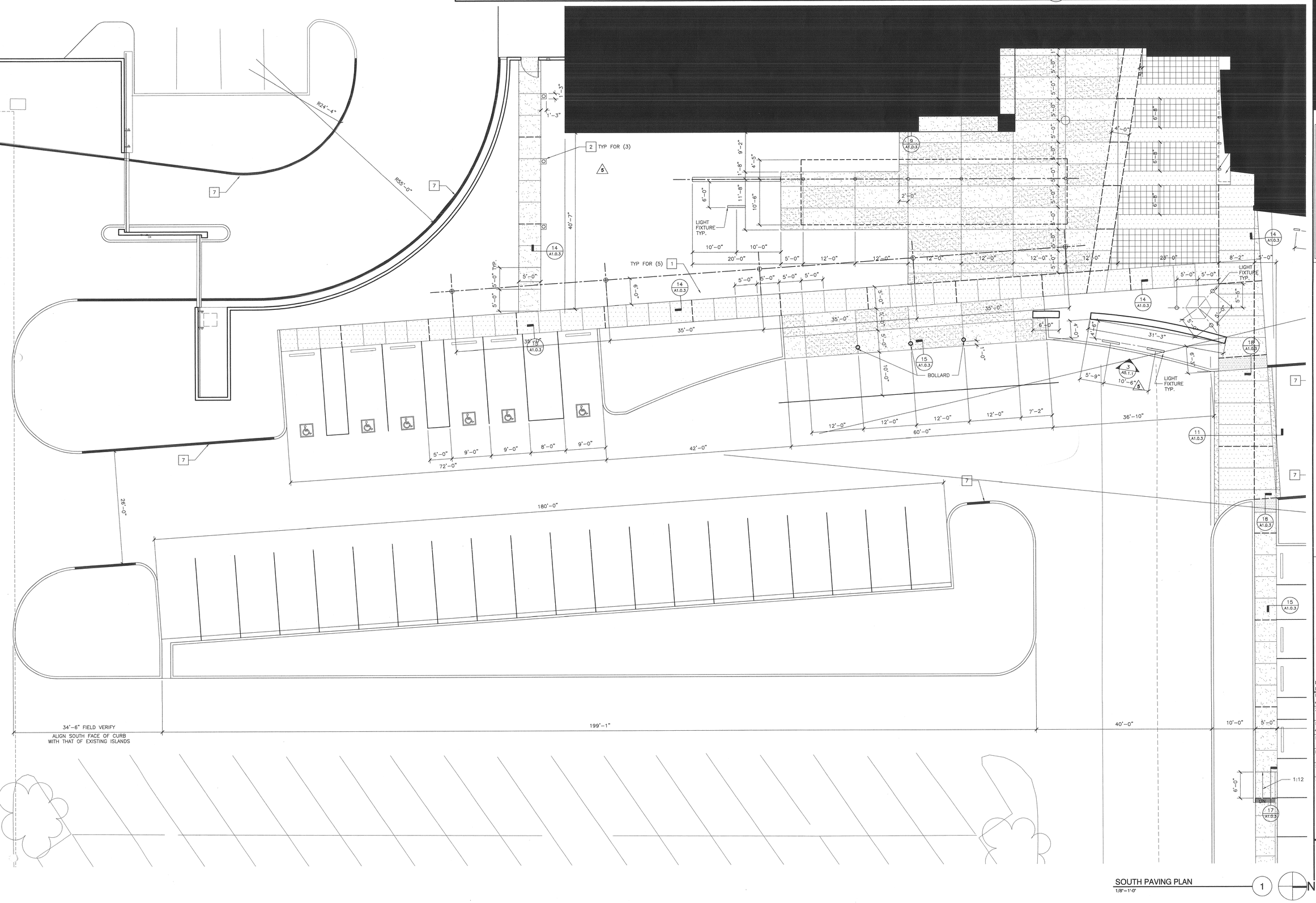

SOUTH PAVING PLAN
1/8"=1'-0"

CARRIER JOHNSON

ARCHITECTURE
INTERIOR DESIGN
PLANNING

GORDON R. CARRIER AIA
MICHAEL C. JOHNSON AIA

WILLIAM C. BOCKEN AIA
DEBORAH P. ELLIOTT IIDA

2600 MICHELSON DRIVE
SUITE 400
IRVINE, CALIFORNIA
92612

TEL 949 955-2353
FAX 949 955-2377

1301 THIRD AVENUE
SAN DIEGO, CALIFORNIA
92101

TEL 619 239-2353
FAX 619 239-6227

RECORD DOCUMENTS

THESE DOCUMENTS RELEASED BY CARRIER JOHNSON FOR USE AS RECORD DOCUMENTS WILL SHOW THE REPORTED LOCATION OF THE WORK AND SIGNIFICANT CHANGES MADE DURING THE CONSTRICTION PROCESS, AND ARE BASED ON UNVERIFIED INFORMATION PROVIDED BY THE CONTRACTOR AND OTHER PARTIES WHICH WILL BE ASSUMED RELIABLE. CARRIER JOHNSON CANNOT AND DOES NOT WARRANT THE ACCURACY AND/OR COMPLETENESS OF THIS INFORMATION AND SHALL NOT BE RESPONSIBLE FOR ANY ERRORS OR OMISSIONS WHICH MAY BE INCORPORATED THEREIN AS A RESULT. FUTURE CONSTRUCTION PLANNING MUST INCLUDE FIELD CONFIRMATION OF EXISTING CONDITIONS.

ONTARIO PD:: HEADQUARTERS

2534 S. ARCHIBALD AVE., ONTARIO, CALIFORNIA 91761

F13 Field Order #13 07.01.03

5 Addendum 5 04.21.2003

3 Addendum 3

2 Addendum 2/Bldg. Dept. Re-Submittal 03.20.2003

Building Dept. Submittal 02.24.2003

ISSUES:

DIRECTORY/FILE NUMBER: 4511.00

4511-A106

XREF'S DRAWINGS:

PROJECT NUMBER: 4511.00

DRAWN BY: CHECKED BY:

DATE:

SCALE: AS NOTED

TITLE: SOUTH PAVING PLAN

DRAWING NO: A1.0.6

PAVING KEYNOTES

7	RED PAINTED CURBS AT FIRE LANE PER ONTARIO FIRE DEPARTMENT STANDARDS (5)
1	NEW POLE LIGHT (ARCHITECTURAL AREA LIGHTING FLEX FH5 LC5XP MATT ALUMINUM FINISH) REFER TO STRUCTURAL FOR FOOTING
2	NEW STEP LIGHT (SISTEMALUX SPARKS WITH 1 WINDOW)
3	EXISTING CONCRETE PAVING TO REMAIN
4	SAWCUT EXISTING CONCRETE EDGE
5	CONCRETE BENCH
6	NEW STEP LIGHT (SISTEMALUX BRIQUE WALL RECESSED S4506)

PAVING LEGEND

SYMBOL	DESCRIPTION	SYMBOL	DESCRIPTION
	CONCRETE PAVING CP-1 (7 / A1.0.3)		EXSPANSION JOINT SEE (8 / A1.0.3)
	CONCRETE PAVING CP-2 (7 / A1.0.3)		CONTROL JOINT SEE (8 / A1.0.3)
	CONCRETE PAVING CP-3 (7 / A1.0.3)		RED PAINTED CURBS AT FIRE LANE PER ONTARIO FIRE DEPARTMENT STANDARDS (5)
	TILE BAND (7 / A1.0.3)		

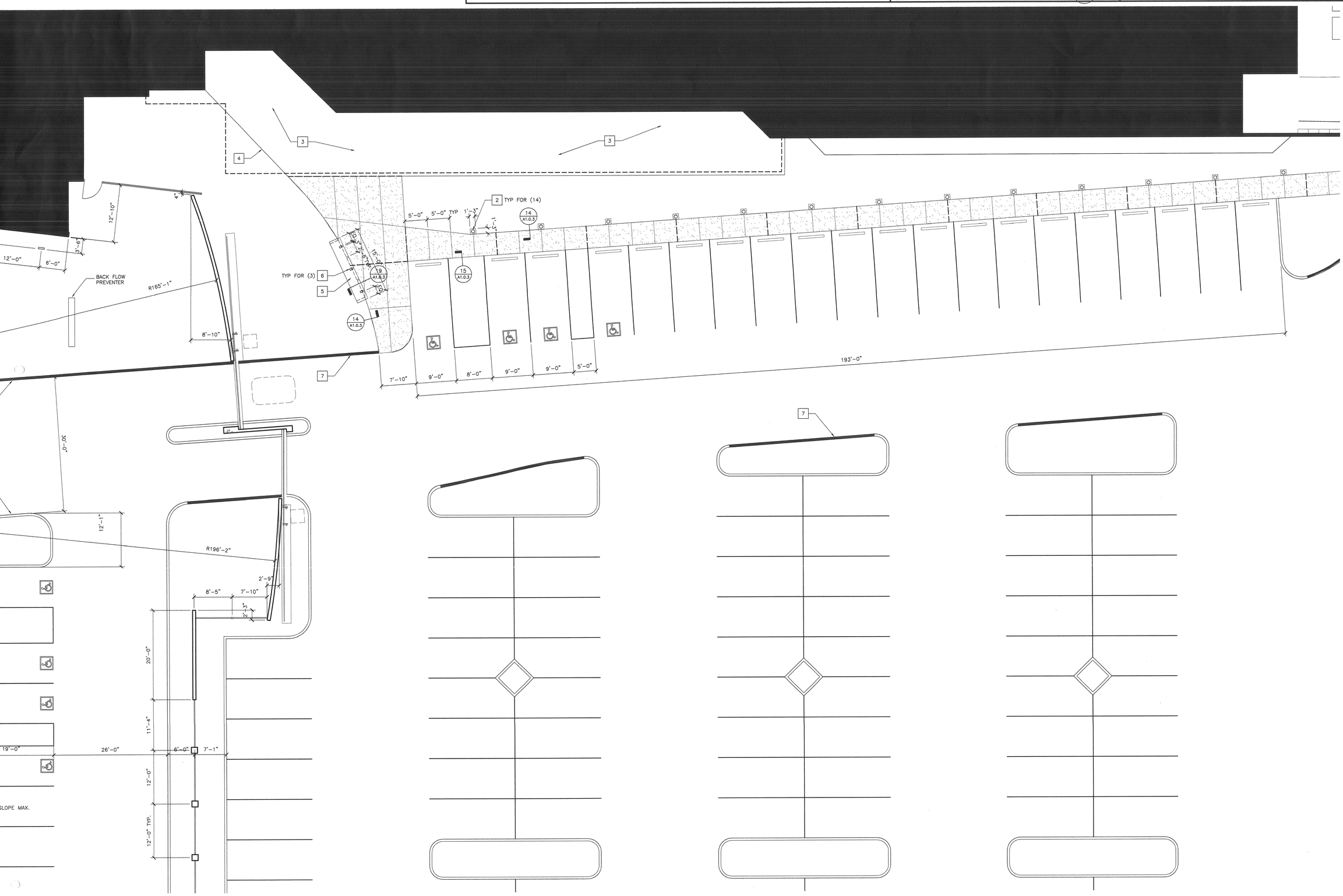

NORTH PAVING PLAN (1)
1/8"=1'-0"

CARRIER JOHNSON

ARCHITECTURE
INTERIOR DESIGN
PLANNING

GORDON R. CARRIER AIA
MICHAEL C. JOHNSON AIA

WILLIAM C. BOCKEN AIA
DEBORAH P. ELLIOTT IIDA

2600 MICHELSON DRIVE
SUITE 400
IRVINE, CALIFORNIA
92612

TEL 949 955-2353
FAX 949 955-2377

1301 THIRD AVENUE
SAN DIEGO, CALIFORNIA
92101

TEL 619 239-2353
FAX 619 239-6227

RECORD DOCUMENTS
THESE DOCUMENTS RELEASED BY CARRIER JOHNSON FOR USE AS RECORD DOCUMENTS WILL SHOW THE REPORTED LOCATION OF THE WORK AND SIGNIFICANT CHANGES MADE DURING THE CONSTRUCTION PROCESS, AND ARE BASED ON UNVERIFIED INFORMATION PROVIDED BY THE CONTRACTOR AND OTHER PARTIES WHICH WILL BE ASSUMED RELIABLE. CARRIER JOHNSON CANNOT AND DOES NOT WARRANT THE ACCURACY AND/OR COMPLETENESS OF THIS INFORMATION AND SHALL NOT BE RESPONSIBLE FOR ANY ERRORS OR OMISSIONS WHICH MAY BE INCORPORATED THEREIN AS A RESULT. FUTURE CONSTRUCTION PLANNING MUST INCLUDE FIELD CONFIRMATION OF EXISTING CONDITIONS.

ONTARIO PD:: HEADQUARTERS

2534 S. ARCHIBALD AVE., ONTARIO, CALIFORNIA 91761

FI3	Field Order #13 07.01.03
5	Addendum 5 04.21.2003
3	Addendum 3
2	Addendum 2/Bldg. Dept. Re-Submittal 03.20.2003
	Building Dept. Submittal 02.24.2003

ISSUES:
DIRECTORY/FILE NUMBER: 4511.00
4511-A107
XREF'S DRAWINGS:
PROJECT NUMBER:
4511.00
DRAWN BY: CHECKED BY:
DATE:
SCALE:
AS NOTED
TITLE:
NORTH PAVING PLAN

DRAWING NO:
A1.0.7 (2)

PAVING KEYNOTES

7	RED PAINTED CURBS AT FIRE LANE PER ONTARIO FIRE DEPARTMENT STANDARDS
1	NEW POLE LIGHT (ARCHITECTURAL AREA LIGHTING FLEX FH5 LC5XP MATT ALUMINUM FINISH) REFER TO STRUCTURAL FOR FOOTING
2	NEW STEP LIGHT (SISTEMALUX SPARKS WITH 1 WINDOW)
3	EXISTING CONCRETE PAVING TO REMAIN
4	SAWCUT EXISTING CONCRETE EDGE
5	CONCRETE BENCH
6	NEW STEP LIGHT (SISTEMALUX BRIQUE WALL RECESSED S4506)

PAVING LEGEND

SYMBOL	DESCRIPTION	SYMBOL	DESCRIPTION
	CONCRETE PAVING CP-1 (7 / A1.0.3)		EXSPANSION JOINT SEE (8 / A1.0.3)
	CONCRETE PAVING CP-2 (7 / A1.0.3)		CONTROL JOINT SEE (8 / A1.0.3)
	CONCRETE PAVING CP-3 (7 / A1.0.3)		RED PAINTED CURBS AT FIRE LANE PER ONTARIO FIRE DEPARTMENT STANDARDS
	TILE BAND (7 / A1.0.3)		

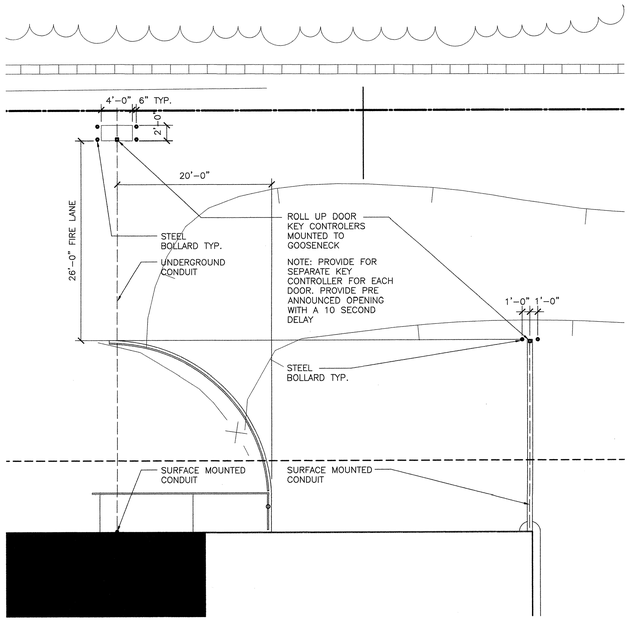

ROLL UP DOOR CONTROLLER PLAN (2)
1/8"=1'-0"

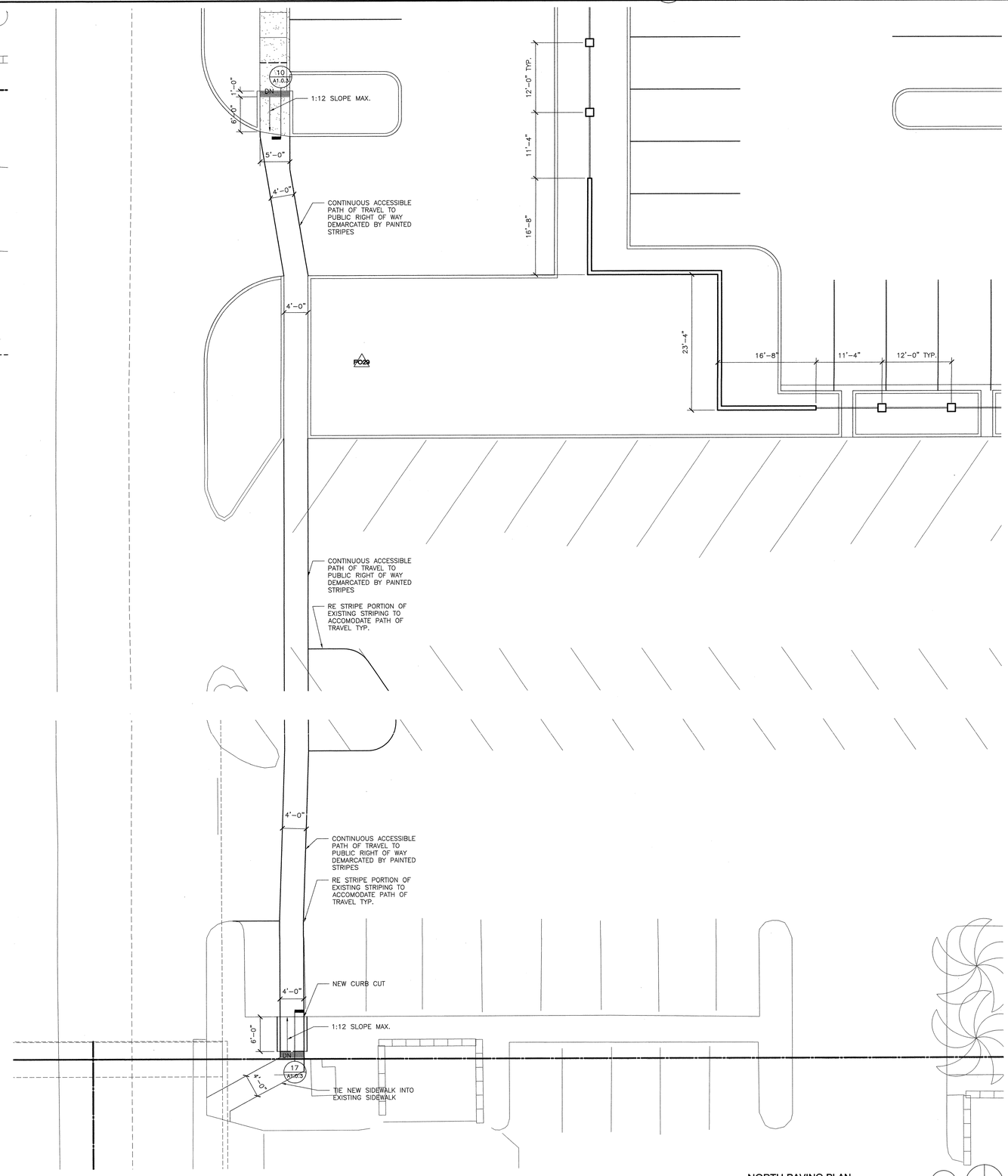

NORTH PAVING PLAN (1)
1/8"=1'-0"

ARCHITECTURE
INTERIOR DESIGN
PLANNING

CARRIER JOHNSON

GORDON R. CARRIER AIA
MICHAEL C. JOHNSON AIA

WILLIAM C. BOCKEN AIA
DEBORAH P. ELLIOTT IIDA

2600 MICHELSON DRIVE
SUITE 400
IRVINE, CALIFORNIA
92612

TEL 949 955-2353
FAX 949 955-2377

1301 THIRD AVENUE
SAN DIEGO, CALIFORNIA
92101

TEL 619 239-2353
FAX 619 239-6227

RECORD DOCUMENTS

THESE DOCUMENTS RELEASED BY CARRIER JOHNSON FOR USE AS RECORD DOCUMENTS WILL SHOW THE REPORTED LOCATION OF THE WORK AND SIGNIFICANT CHANGES MADE DURING THE CONSTRUCTION PROCESS, AND ARE BASED ON UNVERIFIED INFORMATION PROVIDED BY THE CONTRACTOR AND OTHER PARTIES WHICH WILL BE ASSUMED RELIABLE. CARRIER JOHNSON CANNOT AND DOES NOT WARRANT THE ACCURACY AND/OR COMPLETENESS OF THIS INFORMATION AND SHALL NOT BE RESPONSIBLE FOR ANY ERRORS OR OMISSIONS WHICH MAY BE INCORPORATED THEREIN AS A RESULT. FUTURE CONSTRUCTION PLANNING MUST INCLUDE FIELD CONFIRMATION OF EXISTING CONDITIONS.

ONTARIO PD:: HEADQUARTERS

2534 S. ARCHIBALD AVE., ONTARIO, CALIFORNIA 91761

FO29 Field Order 29 10.29.03
F13 Field Order #13 07.01.03
5 Addendum 5 04.21.2003
3 Addendum 3
2 Addendum 2/Bldg. Dept. Re-Submittal 03.20.2003
Building Dept. Submittal 02.24.2003

ISSUES:
DIRECTORY/FILE NUMBER: 4511.00
4511-A108
XREF'S DRAWINGS:
PROJECT NUMBER:
4511.00
DRAWN BY: CHECKED BY:
DATE:
SCALE:
AS NOTED
TITLE:
WEST PAVING PLAN

DRAWING NO:
A1.0.8
5

WITH THIS PROJECT. NONE OF SUCH IDEAS, DESIGN, ARRANGEMENTS, OR PLANS SHALL BE USED BY, OR DISCLOSED TO ANY PERSON, FIRM, OR CORPORATION FOR ANY PURPOSE WHATSOEVER WITHOUT THE WRITTEN PERMISSION OF CARRIER JOHNSON. FILING THESE DRAWINGS OR SPECIFICATIONS WITH ANY PUBLIC AGENCY IS NOT A PUBLICATION OF SAME. NO COPYING, REPRODUCTION OR USE THEREOF IS PERMISSIBLE WITHOUT THE CONSENT OF CARRIER JOHNSON.

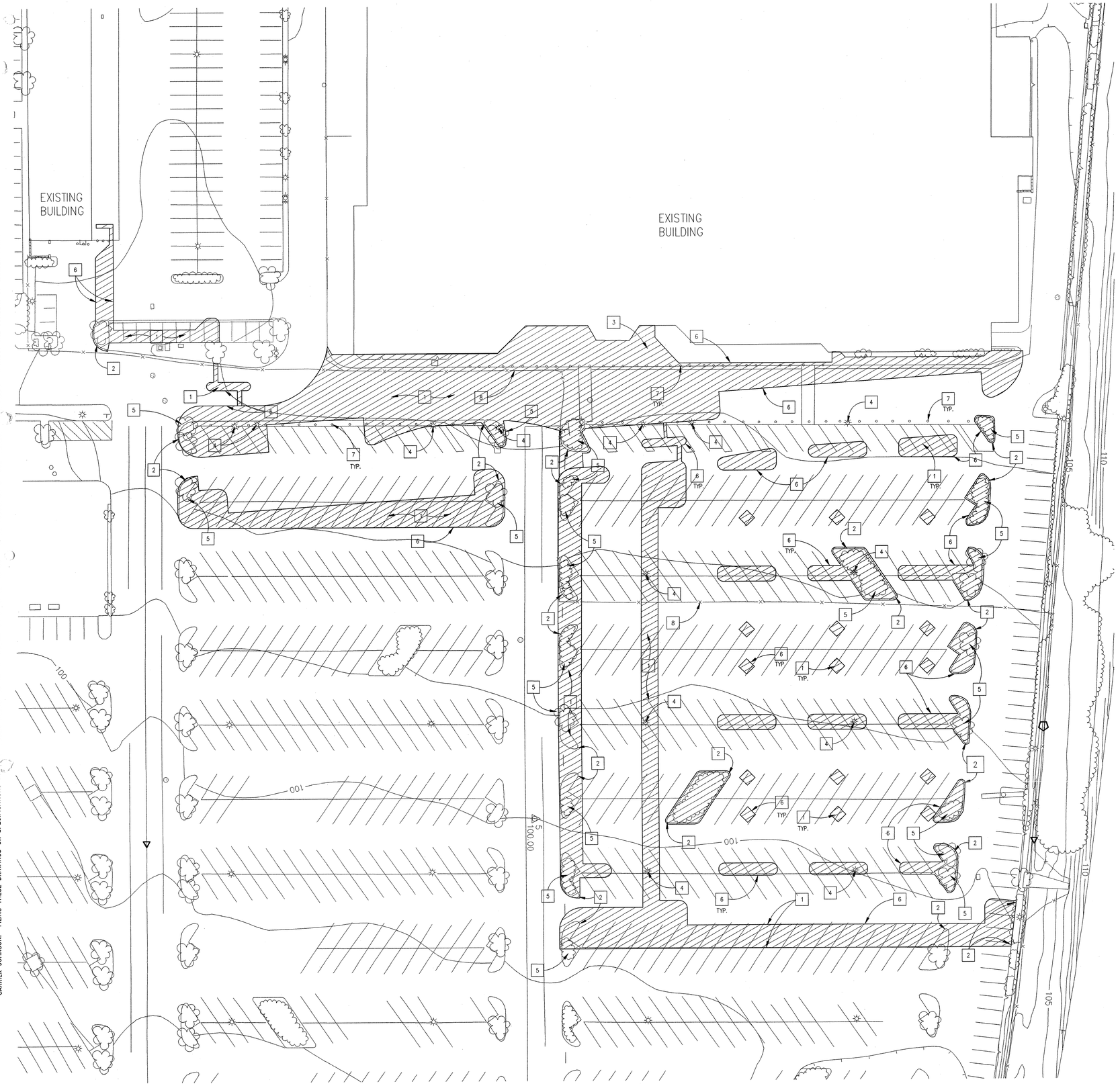

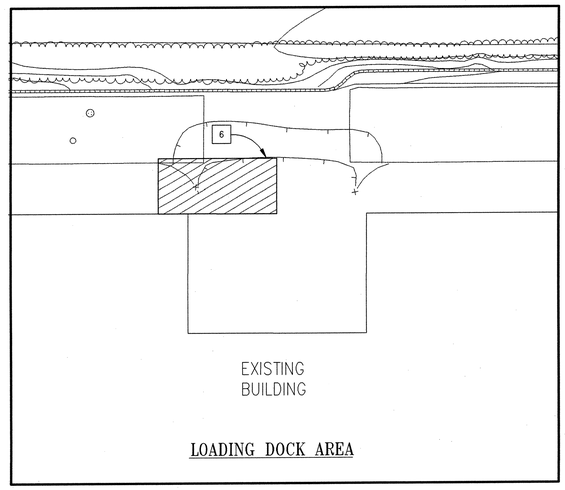

LOADING DOCK AREA

UTILITY NOTE

SEE THE UTILITY PLANS FOR ALL WORK INCLUDING DEMOLITION, REMOVAL, RELOCATION, ABANDONMENT, & CONSTRUCTION OF UTILITY FACILITIES INCLUDING MANHOLES, VAULTS, VALVES, METERS, PULLBOXES, FIRE HYDRANTS, ETC.

LANDSCAPING NOTE

SEE THE LANDSCAPING PLANS FOR DISPOSITION OF EXISTING PLANTING AND IRRIGATION LINES AND APPURTENANCES.

DEMOLITION NOTES

1. REMOVE EXISTING AC PAVEMENT.
2. REMOVE EXISTING PCC CURB/SWALE.
3. REMOVE EXISTING EXISTING SIDEWALK/SLAB/RAMP.
4. REMOVE AND RELOCATE EXISTING LIGHT POLE AND REMOVE FOUNDATION.
5. REMOVE EXISTING TREE/SHRUB.
6. SAWCUT EXISTING AC/PCC PAVEMENT.
7. REMOVE EXISTING BOLLARDS.
8. REMOVE EXISTING FENCE.

LEGEND

INDICATES LIMITS OF DEMOLITION

RECORD DOCUMENTS

THESE RECORD DOCUMENTS SHOW THE REPORTED LOCATION OF THE WORK AND SIGNIFICANT CHANGES MADE DURING THE CONSTRUCTION PROCESS, AND ARE BASED ON UNVERIFIED INFORMATION PROVIDED BY THE CONTRACTOR AND OTHER PARTIES WHICH WILL BE ASSUMED RELIABLE. THE ENGINEER CANNOT AND DOES NOT WARRANT THE ACCURACY AND/OR COMPLETENESS OF THIS INFORMATION AND SHALL NOT BE RESPONSIBLE FOR ANY ERRORS OR OMISSIONS WHICH MAY BE INCORPORATED THEREIN AS A RESULT. FUTURE CONSTRUCTION PLANNING MUST INCLUDE FIELD CONFIRMATION OF EXISTING CONDITIONS.

NORTH

GRAPHIC SCALE

30 0 15 30 60 120

(IN FEET)
1 inch = 30 ft.

REGISTERED PROFESSIONAL ENGINEER
WESLEY H. JOHNSON JR.
No. 45841
Exp. 12-31-06
CIVIL
STATE OF CALIFORNIA

ARCHITECTURE
INTERIOR DESIGN
PLANNING

CARRIER JOHNSON

N R. CARRIER AIA
C. JOHNSON AIA

M C. BOCKEN AIA
P. ELLIOTT IIDA

MICHELSON DRIVE
SUITE 400
IRVINE, CALIFORNIA 92612
TEL 949 955-2353
FAX 949 955-2377

1301 THIRD AVENUE
NEGO, CALIFORNIA 92101
TEL 619 239-2353
FAX 619 239-6227

PREPARED BY: PENCO ENGINEERING INC.
CIVIL ENGINEERING
PLANNING
SURVEYING
CONSTRUCTION MANAGEMENT
ONE TECHNOLOGY PARK
BUILDING J-725
IRVINE, CALIFORNIA 92618
PHONE (949) 753-1511
FAX (949) 753-0775
Wesley H. Johnson Jr. PE 45841 EXP. DATE 12/31/06

ONTARIO PD:: HEADQUARTERS

2534 S. ARCHIBALD AVE., ONTARIO, CALIFORNIA 91761

2 Addendum 2/Bldg. Dept. Re-Submittal 03.20.2003
Building Dept. Submittal 02.24.2003
ISSUES:

DIRECTORY/FILE NUMBER: 4511-A812
XREF'S DRAWINGS:
PROJECT NUMBER: 4511.00
DRAWN BY: CHECKED BY:
DATE: 3/20/03
SCALE: 1"=30'
TITLE: DEMOLITION PLAN

DRAWING NO: C-1

F:\JOB\2002\00818.00\Gradng\03Demo.dwg 03/19/2003 08:55:01 PM PST

ALL IDEAS, DESIGN, ARRANGEMENTS, OR PLANS SHALL BE USED BY, OR DISCLOSED TO ANY PERSON, FIRM, OR CORPORATION FOR ANY PURPOSE WHATSOEVER WITHOUT THE WRITTEN PERMISSION OF CARRIER JOHNSON. WITH THIS PROJECT. NONE OF SUCH IDEAS, DESIGN, ARRANGEMENTS OR PLANS SHALL BE USED BY, OR DISCLOSED TO ANY PERSON, FIRM, OR CORPORATION FOR ANY PURPOSE WHATSOEVER WITHOUT THE WRITTEN PERMISSION OF CARRIER JOHNSON. PUBLICATION OF SAME, NO COPYING, REPRODUCTION OR USE THEREOF PERMISSIBLE WITHOUT THE CONSENT OF CARRIER JOHNSON. CARRIER JOHNSON. FILING THESE DRAWINGS OR SPECIFICATIONS WITH ANY PUBLIC AGENCY IS NOT A PUBLICATION

FF=103.95

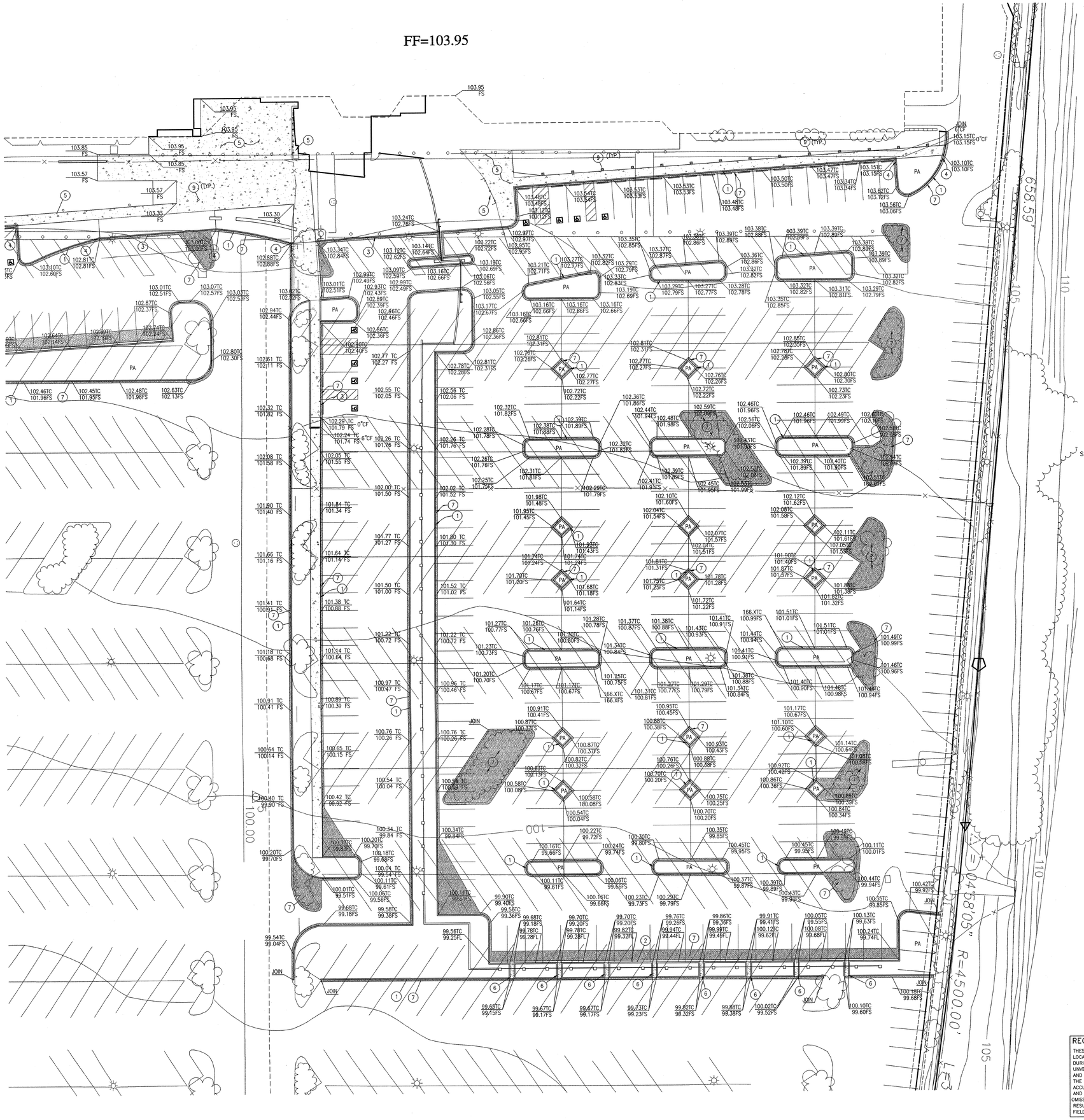

LEGEND AND ABBREVIATIONS

(181)	EXISTING CONTOUR	AB	AGGREGATE BASE
181	PROPOSED CONTOUR	AC	ASPHALT CONCRETE
	SANDBAGS	CF	CURB FACE
RW	IRRIGATION WATER	EX	EXISTING
DW	DOMESTIC WATER	FG	FINISHED GRADE
SD	STORM DRAIN	FL	FLOW LINE
E	ELECTRICAL LINE	FS	FINISHED SURFACE
	RIGHT OF WAY	HP	HIGH POINT
	CUT/FILL LINE	MAX	MAXIMUM
	CENTERLINE	MIN	MINIMUM
	EXISTING	PA	PLANTER AREA
R	RIDGE LINE	R/W	RIGHT OF WAY
	FIRE HYDRANT	TC	TOP OF CURB
	DIRECTION OF FLOW	TP	TOP OF PAVEMENT
	CONCRETE	(TYP.)	TYPICAL
		GB	GRADE BREAK
		CB	CATCH BASIN
			3" AC OVER 4" AB OR MATCH EXISTING WHICHEVER IS GREATER

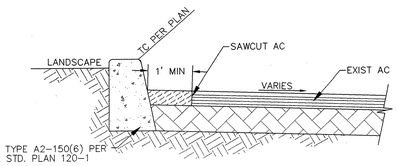

CURB TYPE A2-150(6) PER APWA STD. PLAN 120-1

PLANTER CURB DETAIL
NTS

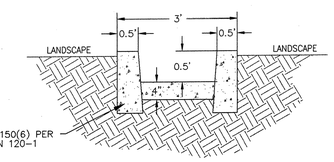

CURB TYPE A1-150(6) PER APWA STD. PLAN 120-1

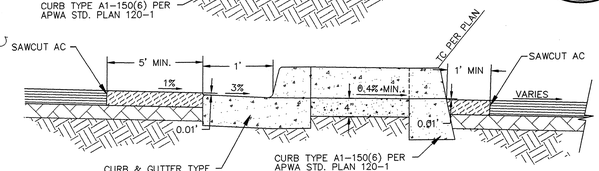

CURB & GUTTER TYPE A2-150(6) PER APWA STD. PLAN 120-1 MODIFIED AS SHOWN.

CURB TYPE A1-150(6) PER APWA STD. PLAN 120-1

"U" GUTTER SECTION
NTS

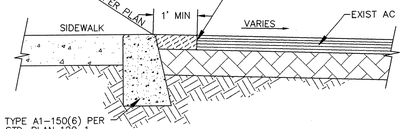

CURB TYPE A1-150(6) PER APWA STD. PLAN 120-1 MODIFIED W/ 0" CF

FLUSH CURB DETAIL
NTS

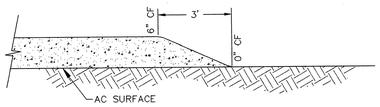

CURB TRANSITION
NTS

CONSTRUCTION NOTES

1. CONSTRUCT 6" VERTICAL CURB PER APWA STD PLAN 120-1, A1-150(6)
2. CONSTRUCT 6" CURB AND GUTTER PER APWA STD PLAN 120-1, A2-150(6), W=1'
3. CONSTRUCT 0" VERTICAL CURB PER APWA STD PLAN 120-1, A1 AND DETAIL ON SHEET C-2.
4. CONSTRUCT 3-FOOT CURB TRANSITION PER DETAIL SHEET C-2.
5. CONSTRUCT 4" SIDEWALK AND HARDSCAPE. SEE ARCHITECT'S PLANS FOR JOINTS AND SCORE LINES, COLOR AND TEXTURE.
6. CONSTRUCT 'U' CHANNEL PER DETAIL SHEET C-2.
7. REPLACE AC PAVEMENT AND BASE IN TYPE AND KIND, 3" AC OVER 4" AB OR MATCH EXISTING, WHICHEVER IS GREATER.
8. REPLACE PCC PAVEMENT AND BASE IN TYPE AND KIND, 6" PCC OVER 4" AB OR MATCH EXISTING, WHICHEVER IS GREATER.
9. LIGHT PER ARCHITECTS PLANS.
10. BENCH PER ARCHITECTS PLANS.



GRAPHIC SCALE

20 0 10 20 40 80

(IN FEET)
1 inch = 20 ft.

RECORD DOCUMENTS

THESE RECORD DOCUMENTS SHOW THE REPORTED LOCATION OF THE WORK AND SIGNIFICANT CHANGES MADE DURING THE CONSTRICTION PROCESS, AND ARE BASED ON UNVERIFIED INFORMATION PROVIDED BY THE CONTRACTOR AND OTHER PARTIES WHICH WILL BE ASSUMED RELIABLE. THE ENGINEER CANNOT AND DOES NOT WARRANT THE ACCURACY AND/OR COMPLETENESS OF THIS INFORMATION AND SHALL NOT BE RESPONSIBLE FOR ANY ERRORS OR OMISSIONS WHICH MAY BE INCORPORATED THEREIN AS A RESULT. FUTURE CONSTRUCTION PLANNING MUST INCLUDE FIELD CONFIRMATION OF EXISTING CONDITIONS.

CARRIER JOHNSON
ARCHITECTURE
INTERIOR DESIGN
PLANNING
N R. CARRIER AIA
C. JOHNSON AIA
M C. BOCKEN AIA
P. ELLIOTT IIDA
MICHELSON DRIVE SUITE 400
IRVINE, CALIFORNIA 92612
TEL 949 955-2353
FAX 949 955-2377
1301 THIRD AVENUE
EGO, CALIFORNIA 92101
TEL 619 239-2353
FAX 619 239-6227

PREPARED BY: PENCO ENGINEERING INC.
CIVIL ENGINEERING
PLANNING
SURVEYING
CONSTRUCTION MANAGEMENT
ONE TECHNOLOGY PARK
IRVINE, CALIFORNIA 92618
(949) 753-8111
FAX (949) 753-0775
Wesley H. Johnson Jr. PE 45841 EXP. DATE 12/31/06

REGISTERED PROFESSIONAL ENGINEER
WESLEY H. JOHNSON JR.
No. 45841
Exp. 12-31-06
CIVIL
STATE OF CALIFORNIA

ONTARIO PD:: HEADQUARTERS
2534 S. ARCHIBALD AVE., ONTARIO, CALIFORNIA 91761

2 Addendum 2/Bldg. Dept. Re-Submittal 03.20.2003
Building Dept. Submittal 02.24.2003

ISSUES:

DIRECTORY/FILE NUMBER: 4511-A812

XREFS DRAWINGS:

PROJECT NUMBER: 4511.00

DRAWN BY: CHECKED BY:

DATE: 3/20/03

SCALE: 1"=20'

TITLE: GRADING PLAN

DRAWING NO: C-2

F:\JOB\2002\00813.00\Grading\04Grading.dwg 03/19/2003 08:58:43 PM PST

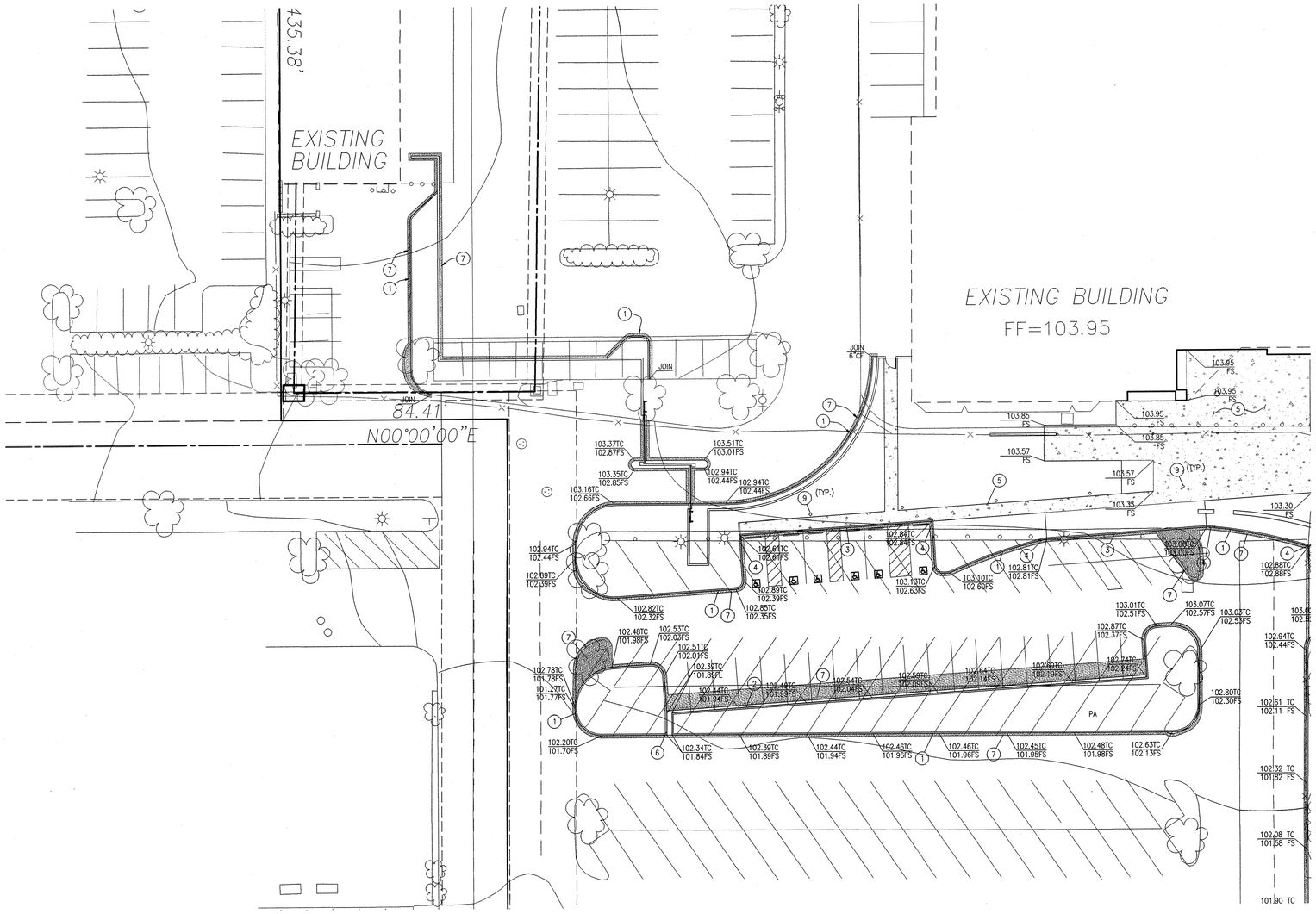

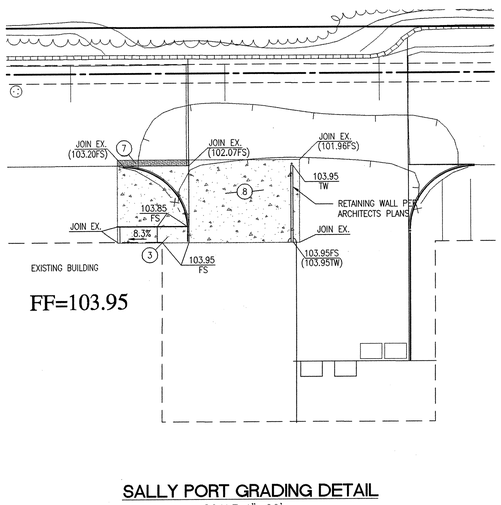

SALLY PORT GRADING DETAIL

LEGEND AND ABBREVIATIONS

(181)	EXISTING CONTOUR	AB	AGGREGATE BASE
181	PROPOSED CONTOUR	AC	ASPHALT CONCRETE
	SANDBAGS	CF	CURB FACE
RW	IRRIGATION WATER	EX	EXISTING
DW	DOMESTIC WATER	FG	FINISHED GRADE
SD	STORM DRAIN	FL	FLOW LINE
E	ELECTRICAL LINE	FS	FINISHED SURFACE
	RIGHT OF WAY	HP	HIGH POINT
	CUT/FILL LINE	MAX	MAXIMUM
	CENTERLINE	MIN	MINIMUM
	EXISTING	PA	PLANTER AREA
R	RIDGE LINE	R/W	RIGHT OF WAY
	FIRE HYDRANT	TC	TOP OF CURB
	DIRECTION OF FLOW	TP	TOP OF PAVEMENT
	CONCRETE	(TYP.)	TYPICAL
		GB	GRADE BREAK
		CB	CATCH BASIN
	3" AC OVER 4" AB OR MATCH EXISTING WHICHEVER IS GREATER		

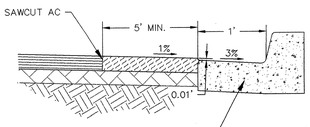

GUTTER SECTION

NTS

CONSTRUCTION NOTES

1. CONSTRUCT 6" VERTICAL CURB PER APWA STD PLAN 120-1, A1-150(6)
2. CONSTRUCT 6" CURB AND GUTTER PER APWA STD PLAN 120-1, A2-150(6), W=1' MODIFIED PER DETAIL HEREON.
3. CONSTRUCT 0" VERTICAL CURB PER APWA STD PLAN 120-1, A1 AND DETAIL ON SHEET C-2.
4. CONSTRUCT 3-FOOT CURB TRANSITION PER DETAIL SHEET C-2.
5. CONSTRUCT 4" SIDEWALK AND HARDSCAPE. SEE ARCHITECT'S PLANS FOR JOINTS AND SCORE LINES, COLOR AND TEXTURE.
6. CONSTRUCT 'U' CHANNEL PER DETAIL SHEET C-2.
7. REPLACE AC PAVEMENT AND BASE IN TYPE AND KIND, 3" AC OVER 4" AB OR MATCH EXISTING, WHICHEVER IS GREATER.
8. REPLACE PCC PAVEMENT AND BASE IN TYPE AND KIND, 6" PCC OVER 4" AB OR MATCH EXISTING, WHICHEVER IS GREATER.
9. LIGHT PER ARCHITECTS PLANS.
10. BENCH PER ARCHITECTS PLANS.

NORTH

GRAPHIC SCALE

20 0 10 20 40 80

(IN FEET)
1 inch = 20 ft.

RECORD DOCUMENTS

THESE RECORD DOCUMENTS SHOW THE REPORTED LOCATION OF THE WORK AND SIGNIFICANT CHANGES MADE DURING THE CONSTRUCTION PROCESS, AND ARE BASED ON UNVERIFIED INFORMATION PROVIDED BY THE CONTRACTOR AND OTHER PARTIES WHICH WILL BE ASSUMED RELIABLE. THE ENGINEER CANNOT AND DOES NOT WARRANT THE ACCURACY AND/OR COMPLETENESS OF THIS INFORMATION AND SHALL NOT BE RESPONSIBLE FOR ANY ERRORS OR OMISSIONS WHICH MAY BE INCORPORATED THEREIN AS A RESULT. FUTURE CONSTRUCTION PLANNING MUST INCLUDE FIELD CONFIRMATION OF EXISTING CONDITIONS.

ALL IDEAS, DESIGNS, ARRANGEMENTS, AND PLANS INDICATED OR REPRESENTED BY THIS DRAWING ARE OWNED BY AND THE PROPERTY OF CARRIER JOHNSON AND WERE CREATED AND DEVELOPED FOR USE IN CONNECTION WITH THIS PROJECT. NONE OF SUCH IDEAS, DESIGN, ARRANGEMENTS, OR PLANS SHALL BE USED BY, OR DISCLOSED TO ANY PERSON, FIRM, OR CORPORATION FOR ANY PURPOSE WHATSOEVER WITHOUT THE WRITTEN PERMISSION OF CARRIER JOHNSON. FILING THESE DRAWINGS OR SPECIFICATIONS WITH ANY PUBLIC AGENCY IS NOT A PUBLICATION OF SAME. NO COPYING, REPRODUCTION OR USE THEREOF IS PERMISSIBLE WITHOUT THE CONSENT OF CARRIER JOHNSON.

ARCHITECTURE
INTERIOR DESIGN
PLANNING

CARRIER JOHNSON

N R. CARRIER AIA
C. JOHNSON AIA

M C. BOCKEN AIA
P. ELLIOTT IIDA

MICHELSON DRIVE SUITE 400
IRVINE, CALIFORNIA 92612
TEL 949 955-2353
FAX 949 955-2377

1301 THIRD AVENUE
IEGO, CALIFORNIA 92101
TEL 619 239-2353
FAX 619 239-5227

PREPARED BY: PENCO ENGINEERING INC.
CIVIL ENGINEERING
SURVEYING
CONSTRUCTION MANAGMENT
ONE TECHNOLOGY PARK
IRVINE, CALIFORNIA 92618
(949) 753-8111
FAX (949) 753-0775

REGISTERED PROFESSIONAL ENGINEER
WESLEY H. JOHNSON JR.
No. 45841
Exp. 12-31-06
CIVIL
STATE OF CALIFORNIA

Wesley H. Johnson Jr. PE 45841 EXP. DATE 12/31/06

ONTARIO PD:: HEADQUARTERS

2534 S. ARCHIBALD AVE., ONTARIO, CALIFORNIA 91761

2 Addendum 2/Bldg. Dept. Re-Submittal 03.20.2003
Building Dept. Submittal 02.24.2003

ISSUES:

DIRECTORY/FILE NUMBER: 4511-A812

XREF'S DRAWINGS:

PROJECT NUMBER: 4511.00

DRAWN BY: CHECKED BY:

DATE: 3/20/03

SCALE: 1"=20'

TITLE: GRADING PLAN

DRAWING NO: C-3

F:\JOB\2002\00818.00\Grading\05Grading.dwg 02/21/03 11:46:02 AM PST

ALL IDEAS, DESIGN, ARRANGEMENTS, OR PLANS SHALL BE USED BY, OR DISCLOSED TO ANY PERSON, FIRM, OR CORPORATION FOR ANY PURPOSE WHATSOEVER WITHOUT THE WRITTEN PERMISSION OF CARRIER JOHNSON. NONE OF SUCH IDEAS, DESIGN, ARRANGEMENTS, OR PLANS SHALL BE USED BY, OR DISCLOSED TO ANY PUBLIC AGENCY EXCEPTAS REQUIRED IN CONNECTION WITH THIS PROJECT. NONE OF SUCH IDEAS, DESIGN, ARRANGEMENTS, OR PLANS SHALL BE USED BY, OR DISCLOSED TO ANY PUBLIC AGENCY EXCEPTAS REQUIRED IN CONNECTION WITH THIS PROJECT. NO COPYING, REPRODUCTION OR USE THEREOF, PERMISSIBLE WITHOUT THE CONSENT OF CARRIER JOHNSON. FILING THESE DRAWINGS OR SPECIFICATIONS WITH ANY PUBLIC AGENCY IS NOT A PUBLICATION OF SAME.

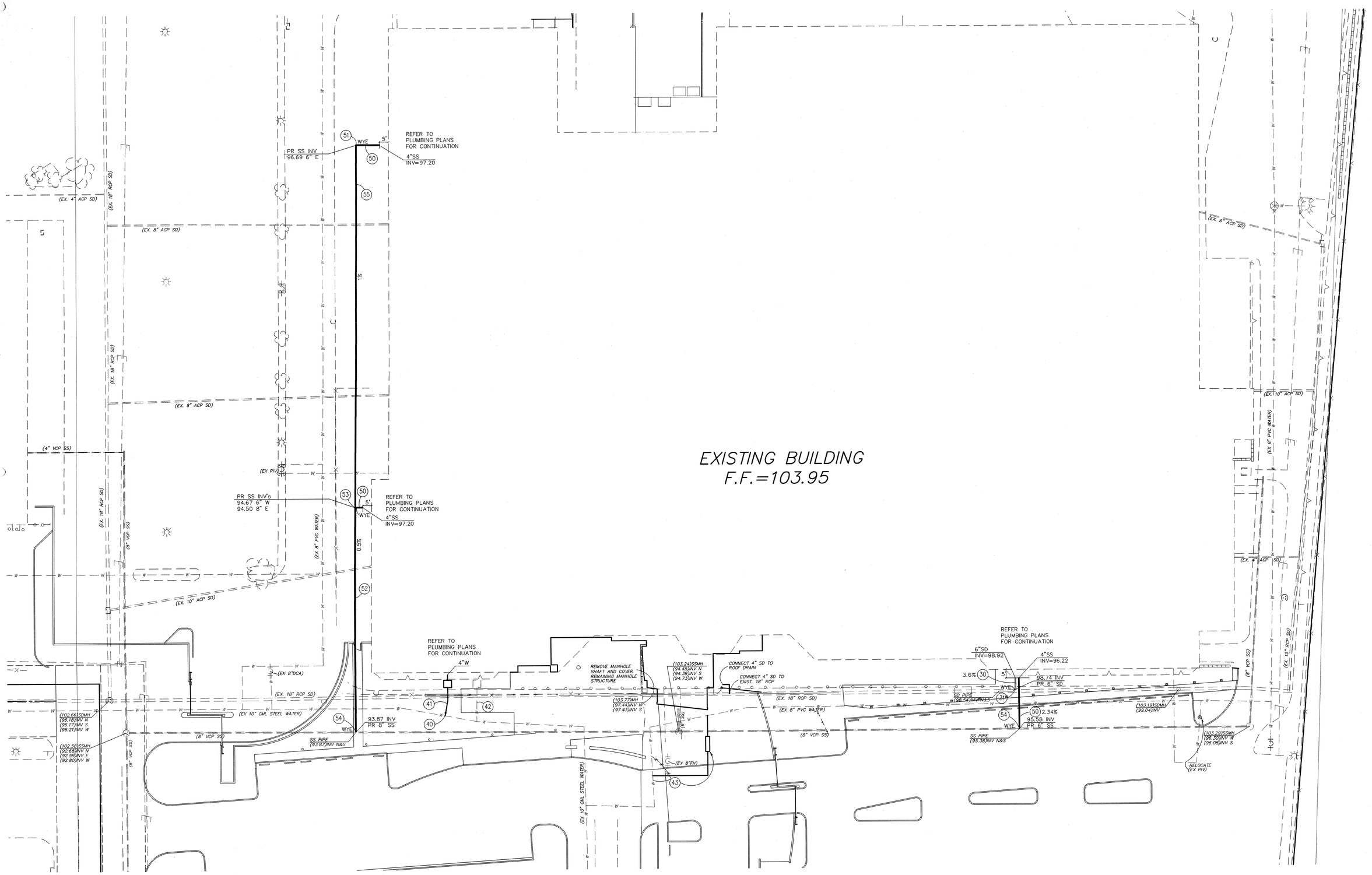

STORM DRAIN CONSTRUCTION NOTES

(30) CONSTRUCT 6" PVC STORM PIPE.

(31) CONNECT TO EXISTING STORM PIPE.

DOMESTIC WATER CONSTRUCTION NOTES

(40) CONSTRUCT 10" x 4" HOT TAP PER CITY OF ONTARIO STD. DWG. NO. 429.

(41) CONSTRUCT 4" SERVICE – MANIFOLD, METER AND VAULT PER CITY OF ONTARIO STD. DWG. NO. 411.

(42) CAP AND ABANDON EXISTING 3" WATER SERVICE PER CITY REQUIREMENTS.

(43) RELOCATE EXISTING BACKFLOW PREVENTION DEVICE.

PRIVATE SEWER CONSTRUCTION NOTES

(50) CONSTRUCT 4" PVC SANITARY SEWER.

(51) CONSTRUCT 6" CLEAN-OUT.

(52) CONSTRUCT 8" PVC SANITARY SEWER.

(53) CONSTRUCT 8" CLEAN-OUT.

(54) CONNECT TO EXISTING SANITARY SEWER.

(55) CONSTRUCT 6" PVC SANITARY SEWER.

NOTE: UTILITY INSTALLATIONS WILL REQUIRE BACKFILL, COMPACTION AND PAVEMENT REPAIR AS NEEDED.

NORTH

GRAPHIC SCALE

20 0 10 20 40 80

(IN FEET)
1 inch = 20 ft.

RECORD DOCUMENTS

THESE RECORD DOCUMENTS SHOW THE REPORTED LOCATION OF THE WORK AND SIGNIFICANT CHANGES MADE DURING THE CONSTRICTION PROCESS, AND ARE BASED ON UNVERIFIED INFORMATION PROVIDED BY THE CONTRACTOR AND OTHER PARTIES WHICH WILL BE ASSUMED RELIABLE. THE ENGINEER CANNOT AND DOES NOT WARRANT THE ACCURACY AND/OR COMPLETENESS OF THIS INFORMATION AND SHALL NOT BE RESPONSIBLE FOR ANY ERRORS OR OMISSIONS WHICH MAY BE INCORPORATED THEREIN AS A RESULT. FUTURE CONSTRUCTION PLANNING MUST INCLUDE FIELD CONFIRMATION OF EXISTING CONDITIONS.

REGISTERED PROFESSIONAL ENGINEER
WESLEY H. JOHNSON JR.
No. 45841
Exp. 12-31-06
CIVIL
STATE OF CALIFORNIA

ARCHITECTURE
INTERIOR DESIGN
PLANNING

CARRIER JOHNSON

GORDON R. CARRIER AIA
MICHAEL C. JOHNSON AIA

WILLIAM C. BOCKEN AIA
DEBORAH P. ELLIOTT IIDA

2600 MICHELSON DRIVE
SUITE 400
IRVINE, CALIFORNIA
92612

TEL 949 955-2353
FAX 949 955-2377

1301 THIRD AVENUE
SAN DIEGO, CALIFORNIA
92101

TEL 619 239-2353
FAX 619 239-6227

PREPARED BY: PENCO ENGINEERING INC.
CIVIL ENGINEERING
PLANNING
SURVEYING
CONSTRUCTION MANAGEMENT
ONE TECHNOLOGY PARK
BUILDING C, 1ST FLOOR
IRVINE, CALIFORNIA 92618
(949) 753-8111
FAX (949) 753-0775
Wesley H. Johnson Jr. PE 45841 EXP. DATE 12/31/06

ONTARIO PD:: HEADQUARTERS

2534 S. ARCHIBALD AVE., ONTARIO, CALIFORNIA 91761

2 Addendum 2/Bldg. Dept. Re-Submittal 03.20.2003
Building Dept. Submittal 02.24.2003

ISSUES:

DIRECTORY/FILE NUMBER: 4511-A812

XREF'S DRAWINGS:

PROJECT NUMBER: 4511.00

DRAWN BY: CHECKED BY:

DATE: 5/14/04

SCALE: 1"=20'

TITLE: UTILITY PLAN

DRAWING NO: C-4

F:\JOB\2002\00818.00\As Builts\06Utility.dwg 05/14/2004 07:35:09 AM PDT

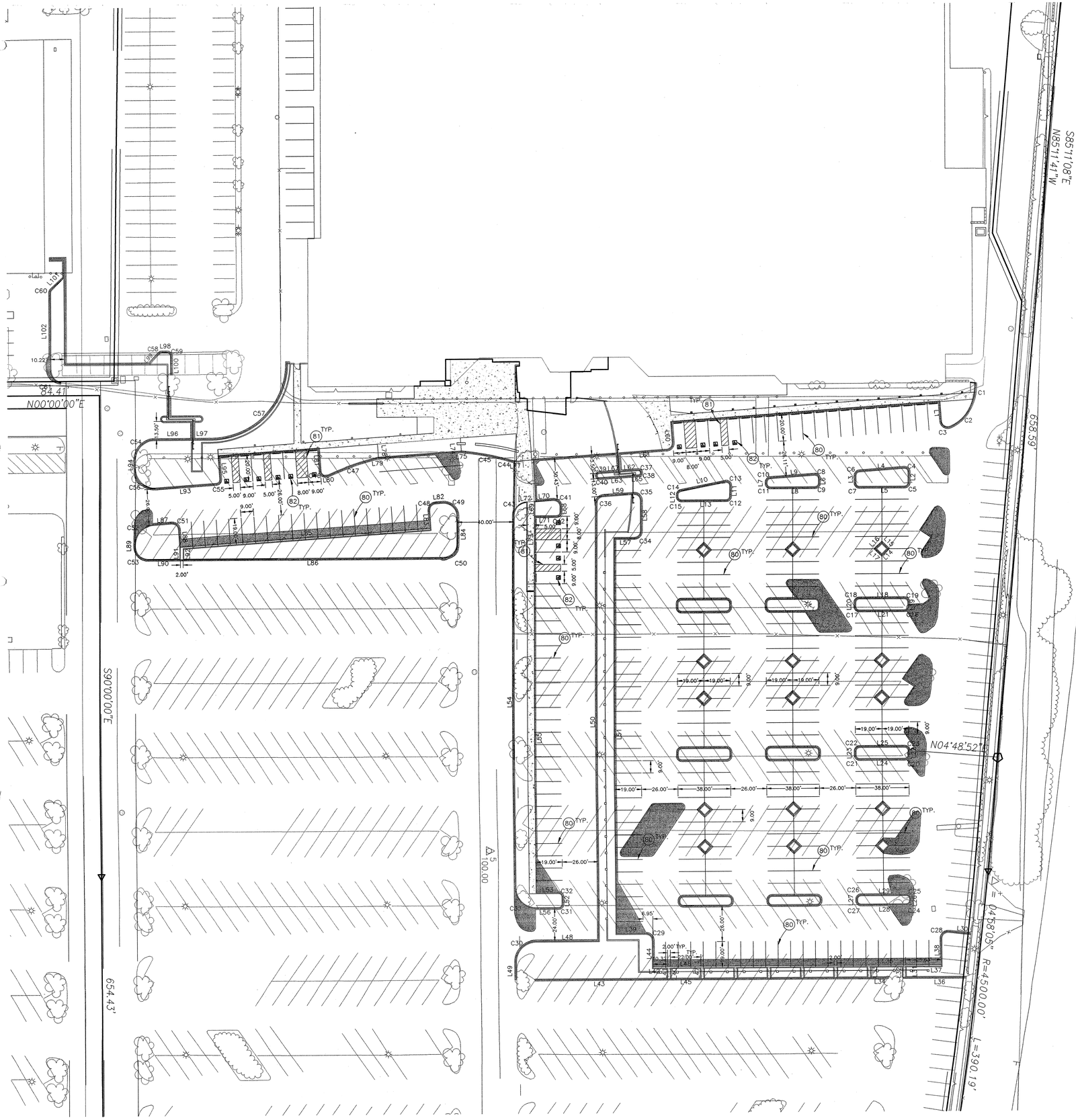

ALL IDEAS, DESIGN, ARRANGEMENTS, OR PLANS SHALL BE USED BY, OR DISCLOSED TO ANY PERSON, FIRM, OR CORPORATION FOR ANY PURPOSE WHATSOEVER WITHOUT THE WRITTEN PERMISSION OF CARRIER JOHNSON. FILING THESE DRAWINGS OR SPECIFICATIONS WITH ANY PUBLIC AGENCY IS NOT A PUBLICATION OF SAME. NO COPYING, REPRODUCTION OR USE THEREOF IS PERMISSIBLE WITHOUT THE CONSENT OF CARRIER JOHNSON.

STRIPING NOTES

(80) CONSTRUCT 4" WHITE PARKING STRIPE.
(81) CONSTRUCT HANDICAP PARKING PER DETAIL HEREON.
(82) CONSTRUCT HANDICAP STENCIL PER DETAIL HEREON.

LEGEND AND ABBREVIATIONS

HANDICAP PARKING

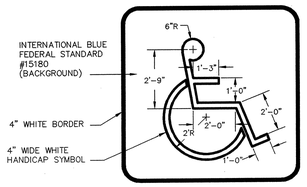

HANDICAP STRIPING DETAIL

SCALE: NONE

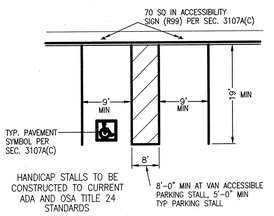

HANDICAP STALLS TO BE CONSTRUCTED TO CURRENT ADA AND OSA TITLE 24 STANDARDS

8'-0" MIN AT VAN ACCESSIBLE PARKING STALL, 5'-0" MIN TYP PARKING STALL

LINE TABLE		
LINE	LENGTH	BEARING
L1	14.00'	N04°00'00"W
L2	7.89'	N00°00'00"E
L3	5.51'	N00°00'00"E
L4	32.09'	N85°45'03"E
L5	32.00'	N90°00'00"E
L6	3.34'	N00°00'00"E
L7	0.97'	N00°00'00"E
L8	32.00'	S90°00'00"E
L9	32.09'	S85°45'03"W
L10	32.73'	N78°42'43"E
L11	7.57'	N00°00'00"E
L12	1.45'	N00°00'00"E
L13	32.00'	N90°00'00"E
L14	6.00'	N45°00'00"E
L15	6.00'	N45°00'00"W
L16	6.00'	S45°00'00"W
L17	6.00'	S45°00'00"E
L18	32.00'	N90°00'00"E
L19	3.00'	S00°00'00"W
L20	3.00'	S00°00'00"E
L21	32.00'	N90°00'00"E
L22	3.00'	S00°00'00"W
L23	3.00'	S00°00'00"E
L24	32.00'	N90°00'00"E
L25	32.00'	N90°00'00"E
L26	1.00'	S00°00'00"E
L27	1.00'	S00°00'00"W
L28	32.00'	N90°00'00"E
L29	32.00'	N90°00'00"E
L30	16.18'	N83°43'47"W
L31	8.00'	S00°00'00"E
L32	8.00'	S00°00'00"E
L33	8.00'	S00°00'00"E
L34	12.71'	N90°00'00"E
L35	23.05'	N90°00'00"E
L36	43.48'	N90°00'00"E
L37	25.63'	N90°00'00"E
L38	19.99'	S00°00'00"W
L39	20.95'	N90°00'00"E
L40	8.00'	S00°00'00"E
L41	8.00'	S00°00'00"E
L42	10.32'	N90°00'00"E
L43	95.47'	N90°00'00"E
L44	20.00'	S00°00'00"W
L45	22.00'	N90°00'00"E
L46	22.00'	N90°00'00"E
L47	8.00'	S00°00'00"E
L48	45.00'	N90°00'00"W
L49	13.00'	S00°00'00"E
L50	318.70'	S00°00'00"E
L51	288.00'	S00°00'00"E
L52	5.17'	S00°00'00"E
L53	16.00'	N90°00'00"E
L54	270.84'	S00°00'00"E
L55	225.00'	S00°00'00"W
L56	16.00'	N90°00'00"W
L57	14.00'	N90°00'00"E
L58	22.24'	N00°00'00"E
L59	21.08'	S86°00'00"W
L60	20.00'	N04°00'00"W
L61	31.21'	S86°00'00"W
L62	12.93'	S86°01'57"W
L63	23.58'	S86°01'57"W
L64	0.00'	N00°00'00"E
L65	3.43'	S86°01'57"W
L66	0.00'	S63°26'06"W
L67	14.09'	S86°01'57"W
L68	4.08'	N00°00'00"E
L69	11.05'	N00°00'00"E
L70	13.69'	S85°42'29"W
L71	16.00'	S90°00'00"W
L72	0.70'	S86°00'00"W
L73	64.70'	S00°00'00"E
L74	5.12'	N04°00'00"W
L75	0.56'	N86°00'00"E
L76	0.53'	N04°00'00"W
L77	1.26'	S86°00'00"W
L78	10.00'	N04°00'00"W
L79	0.56'	N86°00'00"E
L80	2.23'	S86°00'00"W
L81	17.00'	N04°00'00"W
L82	5.20'	S86°00'00"W
L83	14.00'	N04°00'00"W
L84	20.27'	S00°00'00"E
L85	178.00'	S86°00'00"W
L86	187.11'	N90°00'00"E
L87	14.29'	S86°00'00"W
L88	14.00'	N04°00'00"W
L89	0.67'	N00°00'00"E
L90	24.53'	S90°00'00"E
L91	8.03'	S00°00'00"E
L92	8.17'	S00°00'00"E
L93	44.38'	S86°00'00"W
L94	5.51'	N00°00'00"E
L95	22.00'	N04°00'00"W
L96	27.67'	N90°00'00"E
L97	12.53'	N90°00'00"E
L98	3.59'	N90°00'00"E
L99	10.64'	N45°00'00"E
L100	13.51'	S00°00'00"E
L101	13.21'	N45°00'00"E
L102	55.90'	S00°00'00"E

CURVE TABLE				
CURVE	LENGTH	RADIUS	DELTA	TANGENT
C1	14.49'	50.00'	16°35'56"	7.29
C2	24.22'	30.00'	46°15'59"	12.82
C3	9.73'	5.00'	111°28'18"	7.34
C4	4.92'	3.00'	94°00'00"	3.22
C5	4.71'	3.00'	90°00'00"	3.00
C6	4.50'	3.00'	86°00'00"	2.80
C7	4.71'	3.00'	90°00'00"	3.00
C8	4.92'	3.00'	94°00'00"	3.22
C9	4.71'	3.00'	90°00'00"	3.00
C10	4.50'	3.00'	86°00'00"	2.80
C11	4.71'	3.00'	90°00'00"	3.00
C12	4.71'	3.00'	90°00'00"	3.00
C13	5.13'	3.00'	97°55'49"	3.45
C14	3.91'	3.12'	71°49'44"	2.26
C15	4.71'	3.00'	90°00'00"	3.00
C16	4.71'	3.00'	90°00'00"	3.00
C17	4.71'	3.00'	90°00'00"	3.00
C18	4.71'	3.00'	90°00'00"	3.00
C19	4.71'	3.00'	90°00'00"	3.00
C20	4.71'	3.00'	90°00'00"	3.00
C21	4.71'	3.00'	90°00'00"	3.00
C22	4.71'	3.00'	90°00'00"	3.00
C23	4.71'	3.00'	90°00'00"	3.00
C24	4.71'	3.00'	90°00'00"	3.00
C25	4.71'	3.00'	90°00'00"	3.00
C26	4.71'	3.00'	90°00'00"	3.00
C27	4.71'	3.00'	90°00'00"	3.00
C28	8.40'	5.00'	96°16'13"	5.58
C29	7.85'	5.00'	90°00'00"	5.00
C30	23.56'	15.00'	90°00'00"	15.00
C31	4.71'	3.00'	90°00'00"	3.00
C32	4.71'	3.00'	90°00'00"	3.00
C33	23.56'	15.00'	90°00'00"	15.00
C34	7.85'	5.00'	90°00'00"	5.00
C35	8.13'	5.00'	93°11'13"	5.29
C36	7.50'	5.00'	86°00'00"	4.66
C37	3.28'	2.00'	94°00'00"	2.14
C38	3.00'	2.00'	86°00'00"	1.87
C39	3.00'	2.00'	86°00'00"	1.87
C40	3.28'	2.00'	94°00'00"	2.14
C41	8.20'	5.00'	94°00'00"	5.36
C42	4.71'	3.00'	90°00'00"	3.00
C43	15.01'	10.00'	86°00'00"	9.33
C44	1.10'	3.00'	21°01'59"	0.56
C45	37.11'	186.72'	11°23'09"	18.61
C46	4.71'	3.00'	90°00'00"	3.00
C47	37.66'	186.72'	11°33'22"	18.89
C48	7.85'	5.00'	90°00'00"	5.00
C49	16.41'	10.00'	94°00'00"	10.72
C50	15.71'	10.00'	90°00'00"	10.00
C51	7.85'	5.00'	90°00'00"	5.00
C52	22.51'	15.00'	86°00'00"	13.99
C53	15.71'	10.00'	90°00'00"	10.00
C54	23.56'	15.00'	90°00'00"	15.00
C55	4.71'	3.00'	90°00'00"	3.00
C56	24.61'	15.00'	94°00'00"	16.09
C57	86.39'	55.00'	90°00'00"	55.00
C58	2.36'	3.00'	45°00'00"	1.24
C59	4.71'	3.00'	90°00'00"	3.00
C60	2.36'	3.00'	45°00'00"	1.24
C61	13.65'	9.73'	80°23'08"	8.22

RECORD DOCUMENTS

THESE RECORD DOCUMENTS SHOW THE REPORTED LOCATION OF THE WORK AND SIGNIFICANT CHANGES MADE DURING THE CONSTRUCTION PROCESS, AND ARE BASED ON UNVERIFIED INFORMATION PROVIDED BY THE CONTRACTOR AND OTHER PARTIES WHICH WILL BE ASSUMED RELIABLE. THE ENGINEER CANNOT AND DOES NOT WARRANT THE ACCURACY AND/OR COMPLETENESS OF THIS INFORMATION AND SHALL NOT BE RESPONSIBLE FOR ANY ERRORS OR OMISSIONS WHICH MAY BE INCORPORATED THEREIN AS A RESULT. FUTURE CONSTRUCTION PLANNING MUST INCLUDE FIELD CONFIRMATION OF EXISTING CONDITIONS.

NORTH

GRAPHIC SCALE

30 0 15 30 60 120

(IN FEET)
1 inch = 30 ft.

CARRIER JOHNSON
INTERIOR DESIGN
PLANNING
N R. CARRIER AIA
C. JOHNSON AIA
M C. BOCKEN AIA
P. ELLIOTT IIDA
MICHELSON DRIVE
SUITE 400
IRVINE, CALIFORNIA
92612
TEL 949 955-2353
FAX 949 955-2377
1301 THIRD AVENUE
IEGO, CALIFORNIA
92101
TEL 619 239-2353
FAX 619 239-6227

PREPARED BY: PENCO ENGINEERING INC.
ONE TECHNOLOGY PARK
BUILDING C, SUITE 125
RANCHO SANTA MARGARITA, CA 92618
(949) 753-3111
FAX (949) 753-0775
Wesley H. Johnson Jr. PE 45841 EXP. DATE 12/31/06

REGISTERED PROFESSIONAL ENGINEER
WESLEY H. JOHNSON JR
No. 45841
Exp. 12-31-06
CIVIL
STATE OF CALIFORNIA

ONTARIO PD:: HEADQUARTERS

2534 S. ARCHIBALD AVE., ONTARIO, CALIFORNIA 91761

2 Addendum 2/Bldg. Dept. Re-Submittal 03.20.2003
Building Dept. Submittal 02.24.2003

ISSUES:

DIRECTORY/FILE NUMBER: 4511-A812

XREF'S DRAWINGS:

PROJECT NUMBER: 4511.00

DRAWN BY: CHECKED BY:

DATE: 3/20/03

SCALE: 1"=30'

TITLE: HORIZONTAL CONTROL AND STRIPING PLAN

DRAWING NO: C-5

F:\JOB\2002\00818.00\Grading\07Horizontal.dwg 03/19/2003 09:40:10 PM PST

ALL RIGHTS RESERVED. NONE OF SUCH IDEAS, DESIGN, ARRANGEMENTS, OR PLANS SHALL BE USED BY, OR DISCLOSED TO ANY PERSON, FIRM, OR CORPORATION FOR ANY PURPOSE WHATSOEVER WITHOUT THE WRITTEN PERMISSION OF CARRIER JOHNSON. FILING THESE DRAWINGS OR SPECIFICATIONS WITH ANY PUBLIC AGENCY IS NOT A PUBLICATION OF SAME. NO COPYING, REPRODUCTION OR USE THEREOF IS PERMISSIBLE WITHOUT THE CONSENT OF CARRIER JOHNSON.

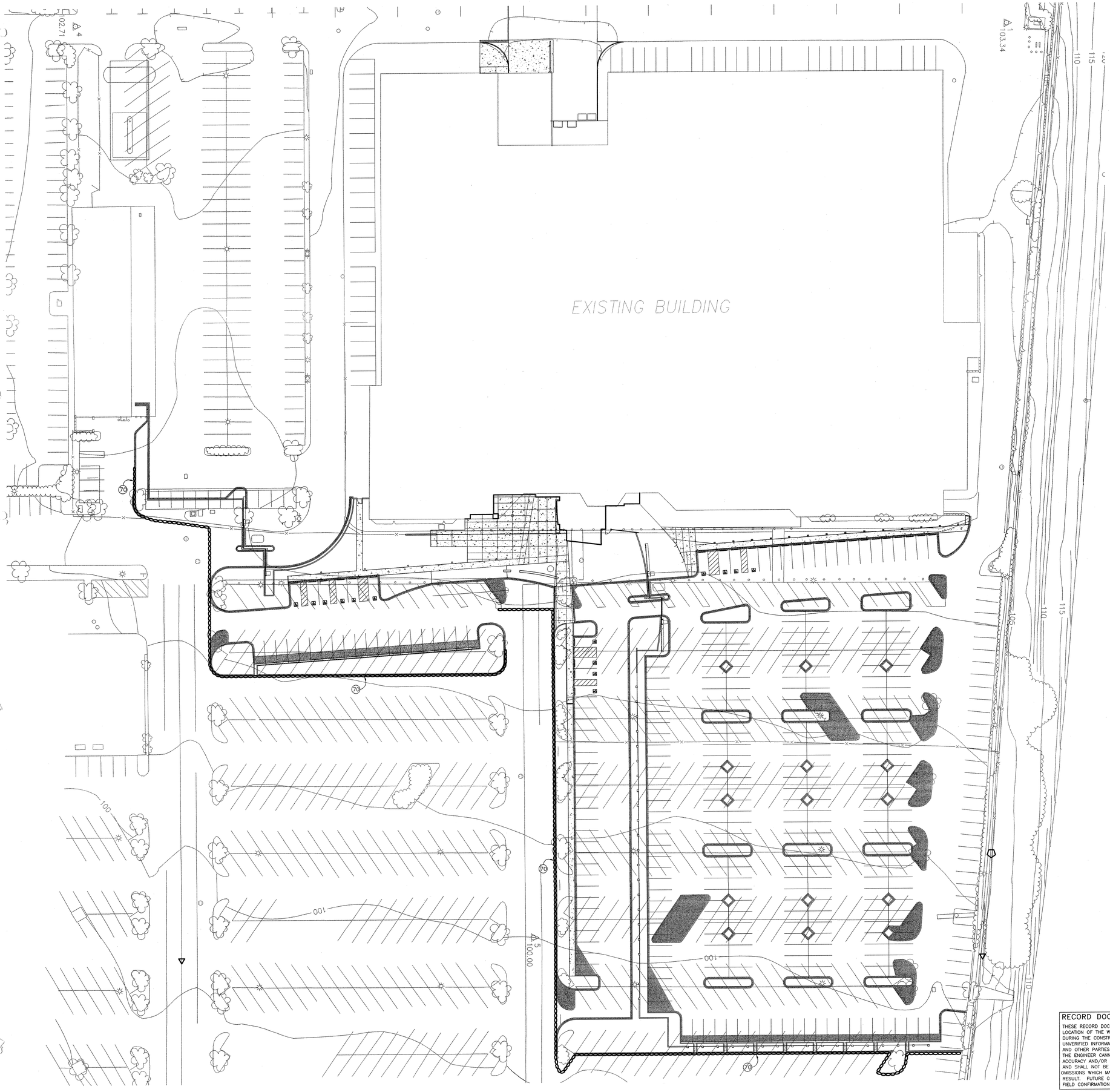

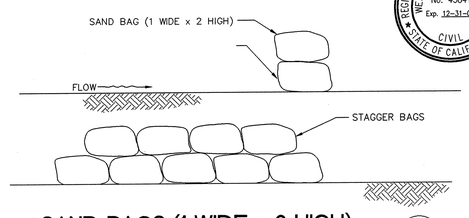

SAND BAGS (1 WIDE x 2 HIGH) (A)

N.T.S.

EROSION CONTROL NOTES

(70) PLACE SANDBAGS PER DETAIL A HEREON.

RECORD DOCUMENTS

THESE RECORD DOCUMENTS SHOW THE REPORTED LOCATION OF THE WORK AND SIGNIFICANT CHANGES MADE DURING THE CONSTRUCTION PROCESS, AND ARE BASED ON UNVERIFIED INFORMATION PROVIDED BY THE CONTRACTOR AND OTHER PARTIES WHICH WILL BE ASSUMED RELIABLE. THE ENGINEER CANNOT AND DOES NOT WARRANT THE ACCURACY AND/OR COMPLETENESS OF THIS INFORMATION AND SHALL NOT BE RESPONSIBLE FOR ANY ERRORS OR OMISSIONS WHICH MAY BE INCORPORATED THEREIN AS A RESULT. FUTURE CONSTRUCTION PLANNING MUST INCLUDE FIELD CONFIRMATION OF EXISTING CONDITIONS.

NORTH

GRAPHIC SCALE

30 0 15 30 60 120

(IN FEET)
1 inch = 30 ft.

ARCHITECTURE
INTERIOR DESIGN
PLANNING

CARRIER JOHNSON

N R. CARRIER AIA
C. JOHNSON AIA

M C. BOCKEN AIA
P. ELLIOTT IIDA

MICHELSON DRIVE SUITE 400
IRVINE, CALIFORNIA 92612

TEL 949 955-2353
FAX 949 955-2377

1301 THIRD AVENUE
IEGO, CALIFORNIA 92101

TEL 619 239-2353
FAX 619 239-6227

PREPARED BY: PENCO ENGINEERING INC.
CIVIL ENGINEERING
PLANNING
SURVEYING
CONSTRUCTION MANAGEMENT
ONE TECHNOLOGY PARK
IRVINE, CALIFORNIA 92618
(949) 753-8111
FAX (949) 753-0775

REGISTERED PROFESSIONAL ENGINEER
WESLEY H. JOHNSON JR.
No. 45841
Exp. 12-31-08
CIVIL
STATE OF CALIFORNIA

Wesley H. Johnson Jr. PE 45841 EXP. DATE 12/31/06

ONTARIO PD:: HEADQUARTERS
2534 S. ARCHIBALD AVE., ONTARIO, CALIFORNIA 91761

2 Addendum 2/Bldg. Dept. Re-Submittal 03.20.2003
Building Dept. Submittal 02.24.2003

ISSUES:

DIRECTORY/FILE NUMBER: 4511-A812

XREF'S DRAWINGS:

PROJECT NUMBER: 4511.00

DRAWN BY: CHECKED BY:

DATE: 3/20/03

SCALE: 1"=30'

TITLE: EROSION CONTROL PLAN

DRAWING NO: C-6

E:\JOB 2002\00918.00\Grading\08Erosion.dwg 03/19/2003 09:43:41 PM PST

CARRIER JOHNSON, FILING THESE DRAWINGS OR SPECIFICATIONS WITH ANY PUBLIC AGENCY IS NOT A PUBLICATION OF SAME. NO COPYING, REPRODUCTION OR USE THEREOF IS PERMISSIBLE WITHOUT THE CONSENT OF CARRIER JOHNSON.

60 FREEWAY

CALTRANS

ARCHIBALD AVENUE

ROLLING & ONTARIO

CHINO BASIN

FORMER FEDCO BUILDING

AUTO SERVICE

LOADING DOCKS

LOADING DOCK

TIMOUTH LLC

ARCHFIELD DRIVEWAY

WESTMARK BRIDGE

ALAN RANCH

AP CLF 0.8' W'LY

BEGIN 2' WIDE V-DITCH 0.4' E'LY

AP BLOCK WALL ON PL

E'LY EDGE CUT POLE 0.7' W'LY

W'LY EDGE BLOCK WALL 0.1' E'LY

CL FH 4.0' E'LY

W'LY EDGE BLOCK WALL ON PL

W'LY EDGE BLOCK WALL 9.0' E'LY

CLF 1.3' S'LY

BLOCK WALL CROSSES PL

CL ELEC BOX 5.5' S'LY

CLF 0.5' N'LY

CL 2' WIDE V-DITCH 1.4' S'LY

NE'LY END BLOCK WALL 4.0' S'LY

CL 2' WIDE V-DITCH 1.9' S'LY

CLF 0.5' N'LY

ICV 8.5' N'LY

N'LY EDGE LT STD. 3.4' S'LY

N'LY EDGE LT STD. 3.3' S'LY

CLF 0.2' N'LY

CL 2' WIDE V-DITCH 2.0' S'LY

AP CLF 0.3' N'LY

N'LY EDGE LT STD. 3.5' S'LY

N'LY FACE 10' WIDE CATCH BASIN 0.2' S'LY

AP CLF 0.6' N'LY

N'LY FACE LT STD. 3.7' S'LY

AP CLF 0.6' N'LY

CLF 0.7' S'LY

CL 2' WIDE V-DITCH 2.0' S'LY

CLF 0.3' N'LY

AP BLOCK WALL 3.0' S'LY

CLF 0.1' W'LY

CL 2' WIDE V-DITCH 2.0' S'LY

CLF 0.3' N

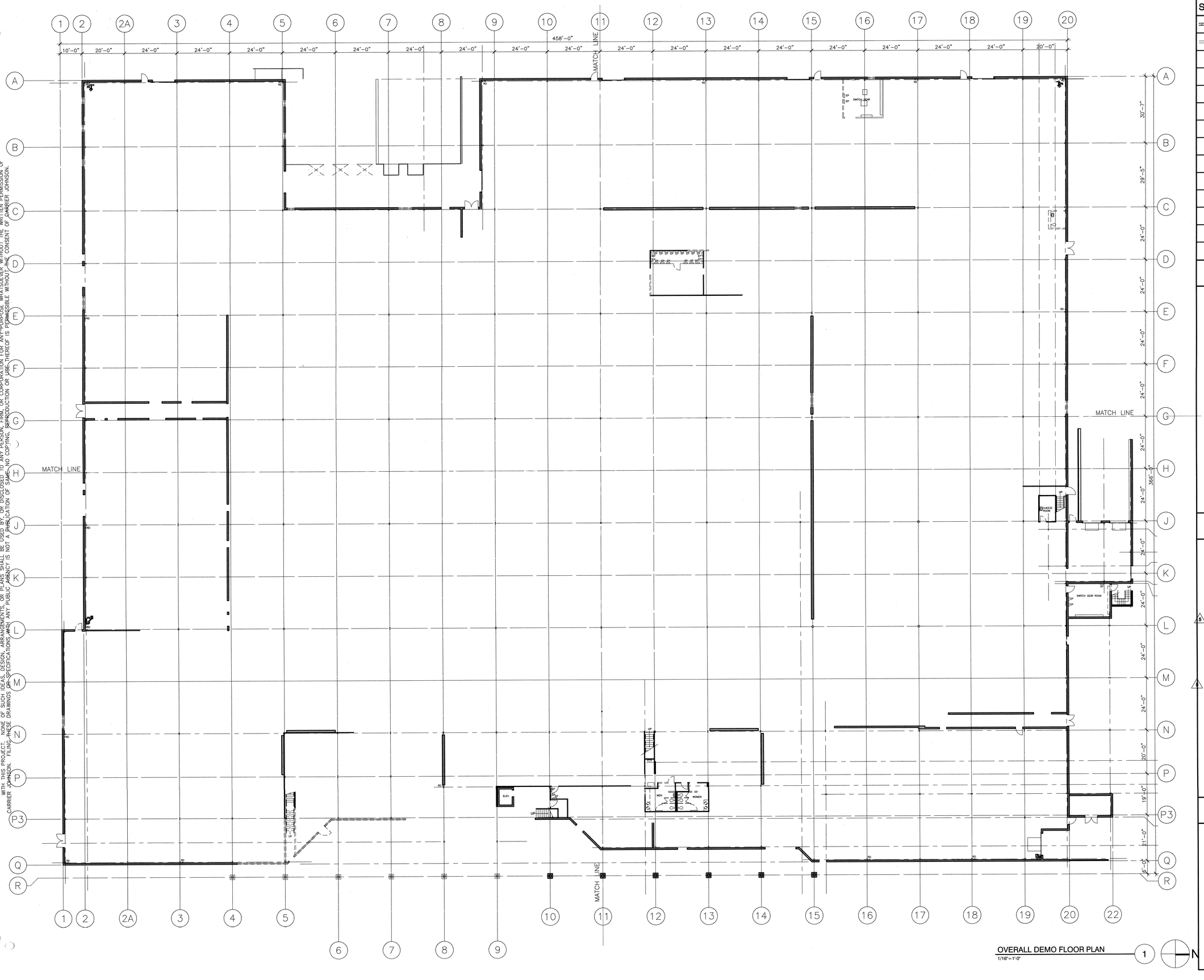

OVERALL DEMO FLOOR PLAN
1/16"=1'-0"

DEMOLITION LEGEND

SYMBOL	DESCRIPTION
	EXISTING PARTITION TO REMAIN
	EXISTING PARTITION AND DOOR TO BE DEMOLISHED

PLAN KEY NOTES

GENERAL NOTES

1. DEMO ALL EXISTING GRID, TILES, DEVICES & LIGHTS THROUGHOUT TENANT PORTION OF SPACE.
2. DEMO ALL EXISTING MECHANICAL AND DUCT WORK THROUGHOUT TENANT PORTION OF SPACE.
3. REMOVE ALL FLOORING, TILE, WOOD PANELING, CABINETRY, BASE AND OTHER MISCELLANEOUS FINISH MATERIALS THROUGHOUT BUILDING.
4. REMOVE ALL ABANDONED CABLING, CONDUITS, DEVICES NOT SCHEDULED TO BE REUSED.
5. REFER TO STRUCTURAL FOR DEMOLITION OF ANY STRUCTURAL ELEMENTS SUCH AS CMU WALLS.
6. THE FIRE SPINKLER SYSTEM SHALL REMAIN IN SERVICE AT ALL TIMES DURING THE DEMOLITION UNLESS A SPECIAL PERMIT IS ISSUED BY THE FIRE DEPARTMENT.
7. REFER TO FLOOR PLANS FOR DIMENSIONS OF DOOR LOCATIONS TO DETERMINE AMOUNT OF DEMOLITION REQUIRED FOR NEW DOORS IN BLOCK WALLS.

KEY PLAN

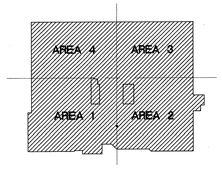

CARRIER JOHNSON

ARCHITECTURE
INTERIOR DESIGN
PLANNING

GORDON R. CARRIER AIA
MICHAEL C. JOHNSON AIA

WILLIAM C. BOCKEN AIA
DEBORAH P. ELLIOTT IIDA

2600 MICHELSON DRIVE
SUITE 400
IRVINE, CALIFORNIA
92612

TEL 949 955-2353
FAX 949 955-2377

1301 THIRD AVENUE
SAN DIEGO, CALIFORNIA
92101

TEL 619 239-2353
FAX 619 239-6227

RECORD DOCUMENTS

THESE DOCUMENTS RELEASED BY CARRIER JOHNSON FOR USE AS RECORD DOCUMENTS WILL SHOW THE REPORTED LOCATION OF THE WORK AND SIGNIFICANT CHANGES MADE DURING THE CONSTRUCTION PROCESS, AND ARE BASED ON UNVERIFIED INFORMATION PROVIDED BY THE CONTRACTOR AND OTHER PARTIES WHICH WILL BE ASSUMED RELIABLE. CARRIER JOHNSON CANNOT AND DOES NOT WARRANT THE ACCURACY AND/OR COMPLETENESS OF THIS INFORMATION AND SHALL NOT BE RESPONSIBLE FOR ANY ERRORS OR OMISSIONS WHICH MAY BE INCORPORATED THEREIN AS A RESULT. FUTURE CONSTRUCTION PLANNING MUST INCLUDE FIELD CONFIRMATION OF EXISTING CONDITIONS.

ONTARIO PD:: HEADQUARTERS

2534 S. ARCHIBALD AVE., ONTARIO, CALIFORNIA 91761

F13 Field Order #13 07.01.03
5 Addendum 5 04.21.2003
3 Addendum 3
2 Addendum 2/Bldg. Dept. Re-Submittal 03.20.2003
Building Dept. Submittal 02.24.2003

ISSUES:
DIRECTORY/FILE NUMBER: 4511.00
4511-A200
XREF'S DRAWINGS:
PROJECT NUMBER:
4511.00
DRAWN BY: CHECKED BY:
DATE:
SCALE:
AS NOTED
TITLE:
DEMO FLOOR PLAN OVERALL FIRST LEVEL

DRAWING NO:
A2.0.0

ALL IDEAS, DESIGN, ARRANGEMENTS AND PLANS INDICATED OR REPRESENTED BY THIS DRAWING ARE OWNED BY, AND THE PROPERTY OF CARRIER JOHNSON AND WERE CREATED, EVOLVED AND DEVELOPED FOR USE ON, AND IN CONNECTION WITH THIS PROJECT. NONE OF SUCH IDEAS, DESIGN, ARRANGEMENTS, OR PLANS SHALL BE USED BY, OR DISCLOSED TO ANY PERSON, FIRM, OR CORPORATION FOR ANY PURPOSE WHATSOEVER WITHOUT THE WRITTEN PERMISSION OF CARRIER JOHNSON. FILING THESE DRAWINGS OR SPECIFICATIONS WITH ANY PUBLIC AGENCY IS NOT A PUBLICATION OF SAME. NO COPYING, REPRODUCTION OR USE THEREOF IS PERMISSIBLE WITHOUT THE CONSENT OF CARRIER JOHNSON.

ALL IDEAS, DESIGN, ARRANGEMENTS, OR PLANS INDICATED OR REPRESENTED BY THIS DRAWING, ALL OF WHICH ARE PROPRIETARY TO CARRIER JOHNSON, NONE OF SUCH IDEAS, DESIGN, ARRANGEMENTS, OR PLANS SHALL BE USED BY, OR DISCLOSED TO, ANY PERSON, FIRM, OR CORPORATION FOR ANY PURPOSE WHATSOEVER WITHOUT THE WRITTEN PERMISSION OF CARRIER JOHNSON. FILING THESE DRAWINGS OR SPECIFICATIONS WITH ANY PUBLIC AGENCY IS NOT A PUBLICATION OF SAME. NO COPYING, REPRODUCTION OR USE THEREOF IS PERMISSIBLE WITHOUT THE CONSENT OF CARRIER JOHNSON.



DEMO FLOOR PLAN AREA 1
1/8"=1'-0"

DEMOLITION LEGEND

SYMBOL	DESCRIPTION
	EXISTING PARTITION TO REMAIN
	EXISTING PARTITION AND DOOR TO BE DEMOLISHED

PLAN KEY NOTES

GENERAL NOTES

1. DEMO ALL EXISTING GRID, TILES, DEVICES & LIGHTS THROUGHOUT TENANT PORTION OF SPACE.
2. DEMO ALL EXISTING MECHANICAL AND DUCT WORK THROUGHOUT TENANT PORTION OF SPACE.
3. REMOVE ALL FLOORING, TILE, WOOD PANELING, CABINETRY, BASE AND OTHER MISCELLANEOUS FINISH MATERIALS THROUGHOUT BUILDING.
4. REMOVE ALL ABANDONED CABLING, CONDUITS, DEVICES NOT SCHEDULED TO BE REUSED.
5. REFER TO STRUCTURAL FOR DEMOLITION OF ANY STRUCTURAL ELEMENTS SUCH AS CMU WALLS.
6. THE FIRE SPINKLER SYSTEM SHALL REMAIN IN SERVICE AT ALL TIMES DURING THE DEMOLITION UNLESS A SPECIAL PERMIT IS ISSUED BY THE FIRE DEPARTMENT.
7. REFER TO FLOOR PLANS FOR DIMENSIONS OF DOOR LOCATIONS TO DETERMINE AMOUNT OF DEMOLITION REQUIRED FOR NEW DOORS IN BLOCK WALLS.

KEY PLAN

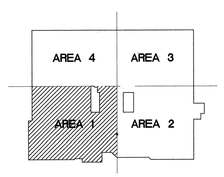

ARCHITECTURE
INTERIOR DESIGN
PLANNING

CARRIER JOHNSON

GORDON R. CARRIER AIA
MICHAEL C. JOHNSON AIA

WILLIAM C. BOCKEN AIA
DEBORAH P. ELLIOTT IIDA

2600 MICHELSON DRIVE
SUITE 400
IRVINE, CALIFORNIA
92612

TEL 949 955-2353
FAX 949 955-2377

1301 THIRD AVENUE
SAN DIEGO, CALIFORNIA
92101

TEL 619 239-2353
FAX 619 239-6227

RECORD DOCUMENTS
THESE DOCUMENTS RELEASED BY CARRIER JOHNSON FOR USE AS RECORD DOCUMENTS WILL GRAPHICALLY DEPICT LOCATION OF THE WORK AND SIGNIFICANT CHANGES MADE DURING THE CONSTRUCTION PROCESS, AND WE BASED ON LIMITED INFORMATION PROVIDED BY THE CONTRACTOR AND OTHER PARTIES WHICH WILL BE ASSUMED RELIABLE. CARRIER JOHNSON CANNOT AND DOES NOT WARRANT THE ACCURACY AND COMPLETENESS OF THE INFORMATION AND SHALL NOT BE RESPONSIBLE FOR ANY ERRORS OR OMISSIONS WHICH MAY BE INCORPORATED THEREIN AS A RESULT. FUTURE CONSTRUCTION PLANNING MUST INCLUDE FIELD CONFIRMATION OF EXISTING CONDITIONS.

ONTARIO PD:: HEADQUARTERS

2534 S. ARCHIBALD AVE., ONTARIO, CALIFORNIA 91761

△3 Field Order #13 07.01.03
△5 Addendum 5 04.21.2003
△3 Addendum 3
△2 Addendum 2/Bldg. Dept. Re-Submittal 03.20.2003
Building Dept. Submittal 02.24.2003

ISSUES:
DIRECTORY/FILE NUMBER: 4511.00
XREF'S DRAWINGS:
PROJECT NUMBER: 4511.00
DRAWN BY: CHECKED BY:
DATE: 1/23/03
SCALE: 1/8" = 1'-0"

TITLE:
DEMO
FLOOR PLAN
FIRST LEVEL
AREA 1

DRAWING NO:
A2.0.1 △2

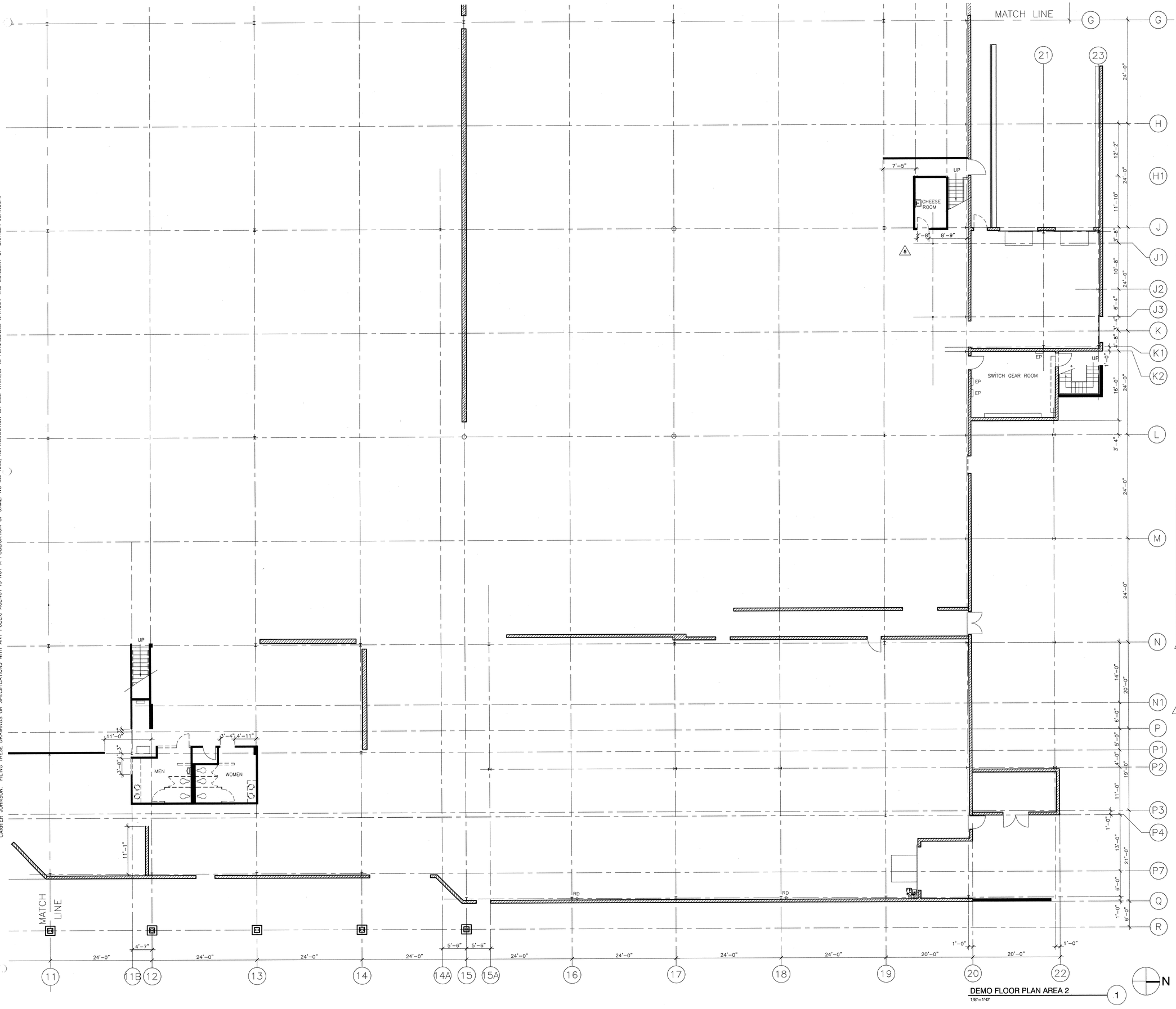
MATCH LINE
MATCH LINE
7'-5"
UP
CHEESE ROOM
2'-8"
8'-9"
5
SWITCH GEAR ROOM
EP
EP
EP
UP
UP
MEN
WOMEN
11'-0"
3'-4"
4'-11"
3'-8"
11'-1"
RD
RD
FD
24'-0"
24'-0"
24'-0"

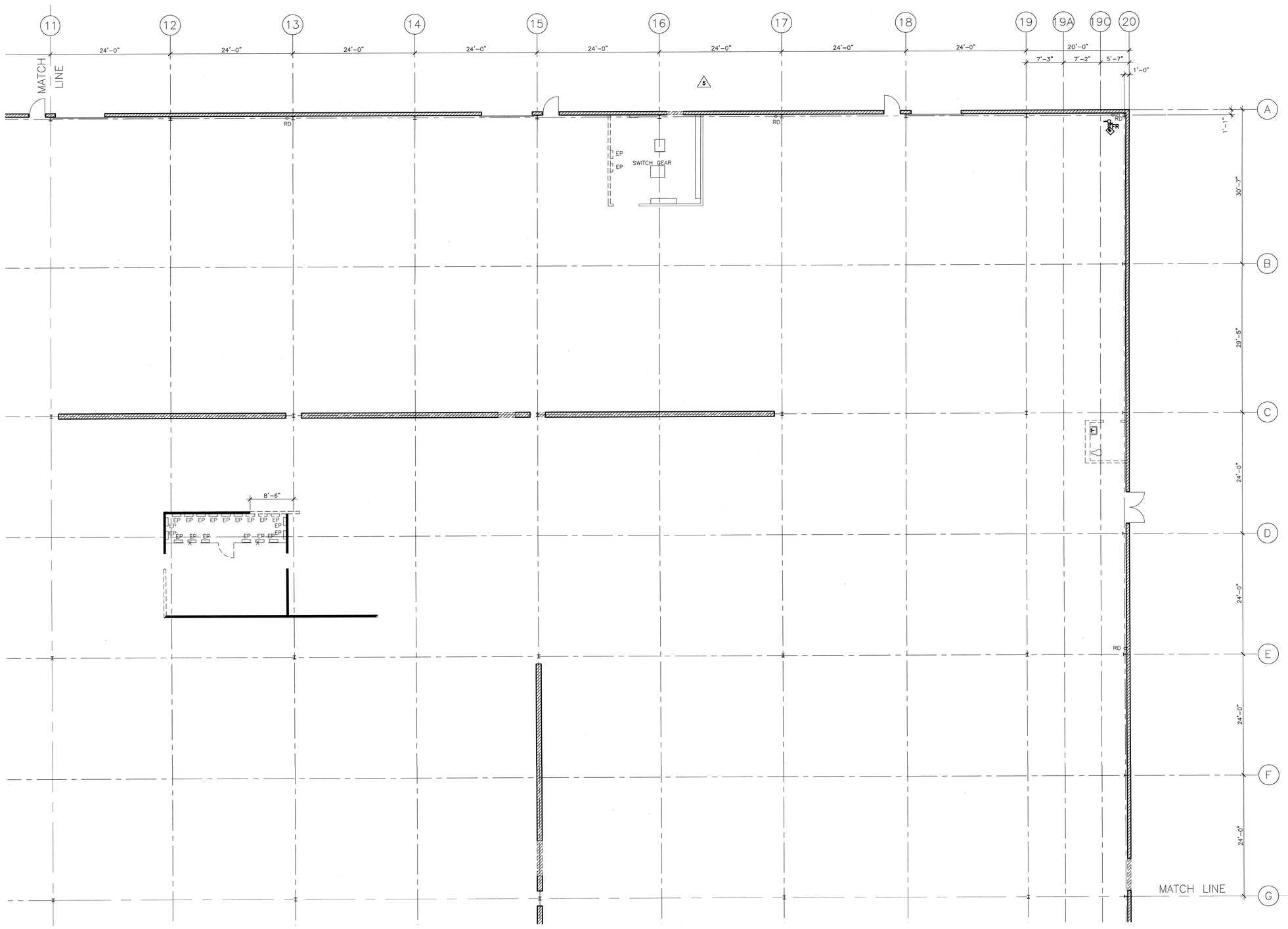

DEMO FLOOR PLAN AREA 3
1/8"=1'-0"
1
N

DEMOLITION LEGEND

SYMBOL	DESCRIPTION
	EXISTING PARTITION TO REMAIN
	EXISTING PARTITION AND DOOR TO BE DEMOLISHED

PLAN KEY NOTES 1

GENERAL NOTES

1. DEMO ALL EXISTING GRID, TILES, DEVICES & LIGHTS THROUGHOUT TENANT PORTION OF SPACE.
2. DEMO ALL EXISTING MECHANICAL AND DUCT WORK THROUGHOUT TENANT PORTION OF SPACE.
3. REMOVE ALL FLOORING, TILE, WOOD PANELING, CABINETRY, BASE AND OTHER MISCELLANEOUS FINISH MATERIALS THROUGHOUT BUILDING.
4. REMOVE ALL ABANDONED CABLING, CONDUITS, DEVICES NOT SCHEDULED TO BE REUSED.
5. REFER TO STRUCTURAL FOR DEMOLITION OF ANY STRUCTURAL ELEMENTS SUCH AS CMU WALLS.
6. THE FIRE SPINKLER SYSTEM SHALL REMAIN IN SERVICE AT ALL TIMES DURING THE DEMOLITION UNLESS A SPECIAL PERMIT IS ISSUED BY THE FIRE DEPARTMENT.
7. REFER TO FLOOR PLANS FOR DIMENSIONS OF DOOR LOCATIONS TO DETERMINE AMOUNT OF DEMOLITION REQUIRED FOR NEW DOORS IN BLOCK WALLS.

KEY PLAN

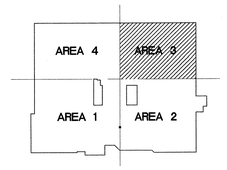

CARRIER JOHNSON

ARCHITECTURE
INTERIOR DESIGN
PLANNING

GORDON R. CARRIER AIA
MICHAEL C. JOHNSON AIA

WILLIAM C. BOCKEN AIA
DEBORAH P. ELLIOTT IIDA

2600 MICHELSON DRIVE
SUITE 400
IRVINE, CALIFORNIA
92612

TEL 949 955-2353
FAX 949 955-2377

1301 THIRD AVENUE
SAN DIEGO, CALIFORNIA
92101

TEL 619 239-2353
FAX 619 239-6227

RECORD DOCUMENTS
THESE DOCUMENTS RELEASED BY CARRIER JOHNSON FOR USE AS RECORD DOCUMENTS WILL SHOW THE REPORTED LOCATION OF THE WORK AND SIGNIFICANT CHANGES MADE DURING THE CONSTRUCTION PROCESS, AND ARE BASED ON UNVERIFIED INFORMATION PROVIDED BY THE CONTRACTOR AND OTHER PARTIES WHICH WILL BE ASSUMED RELIABLE. CARRIER JOHNSON CANNOT AND DOES NOT WARRANT THE ACCURACY AND/OR COMPLETENESS OF THIS INFORMATION AND SHALL NOT BE RESPONSIBLE FOR ANY ERRORS OR OMISSIONS WHICH MAY BE INCORPORATED THEREIN AS A RESULT. FUTURE CONSTRUCTION PLANNING MUST INCLUDE FIELD CONFIRMATION OF EXISTING CONDITIONS.

ONTARIO PD:: HEADQUARTERS

2534 S. ARCHIBALD AVE., ONTARIO, CALIFORNIA 91761

Field Order #13 07.01.03
5 Addendum 5 04.21.2003
3 Addendum 3
2 Addendum 2/Bldg. Dept. Re-Submittal 03.20.2003
Building Dept. Submittal 02.24.2003

ISSUES:
DIRECTORY/FILE NUMBER: 4511.00
XREF'S DRAWINGS:
PROJECT NUMBER: 4511.00
DRAWN BY: CHECKED BY:
DATE: 1/23/03
SCALE: 1/8" = 1'-0"
TITLE: DEMO FLOOR PLAN FIRST LEVEL AREA 3
DRAWING NO: A2.0.3 2

ALL IDEAS, DESIGN, ARRANGEMENTS AND PLANS INDICATED OR REPRESENTED BY THIS DRAWING ARE THE PROPERTY OF CARRIER JOHNSON AND WITH THIS PROJECT. NONE OF SUCH IDEAS, DESIGN, ARRANGEMENTS, OR PLANS SHALL BE USED BY, OR DISCLOSED TO ANY PERSON, FIRM, OR CORPORATION FOR ANY PURPOSE WHATSOEVER WITHOUT THE WRITTEN PERMISSION OF CARRIER JOHNSON. FILING THESE DRAWINGS OR SPECIFICATIONS WITH ANY PUBLIC AGENCY IS NOT A PUBLICATION OF SAME. NO COPYING, REPRODUCTION OR USE THEREOF IS PERMISSIBLE WITHOUT THE CONSENT OF CARRIER JOHNSON.

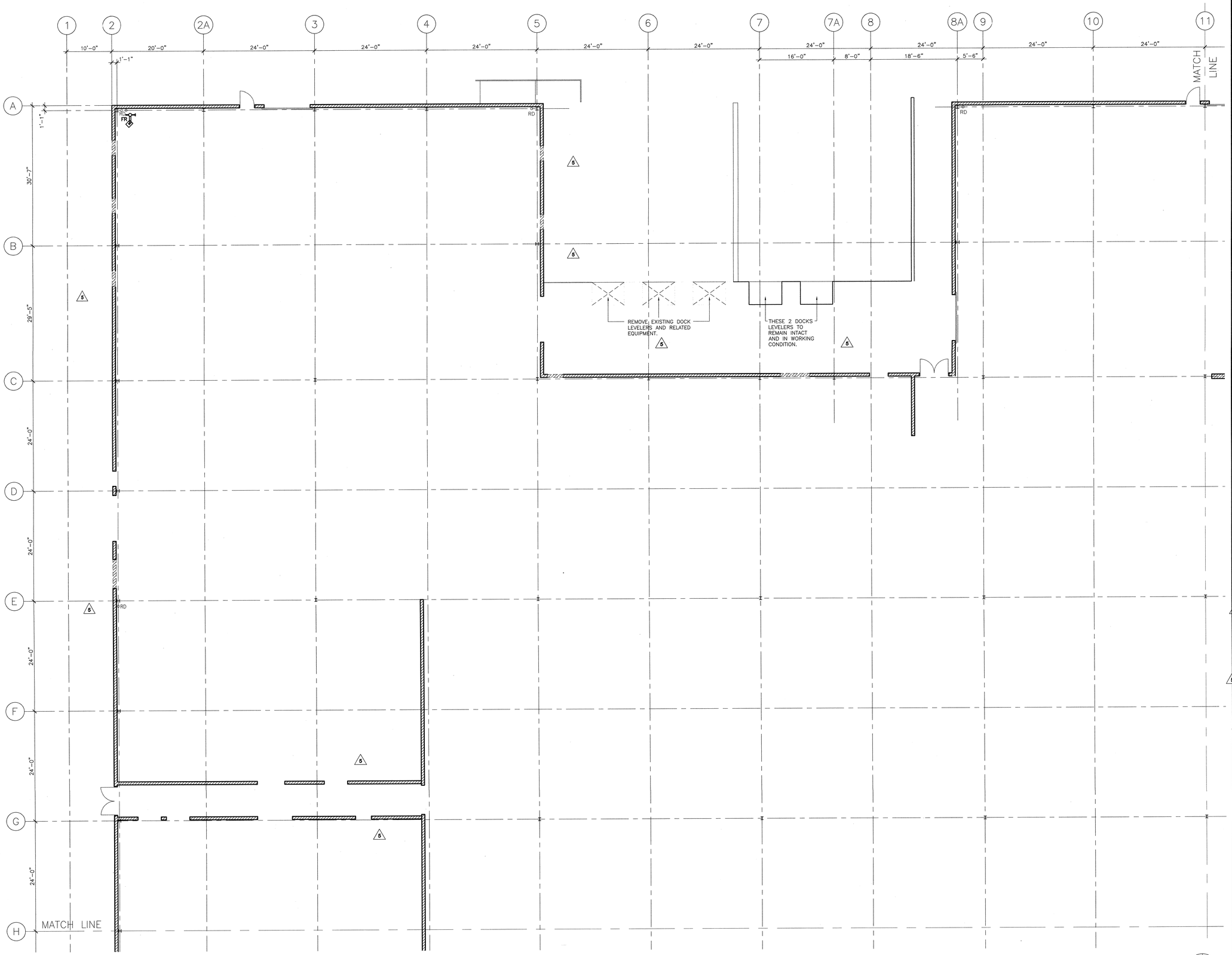

DEMO FLOOR PLAN AREA 4 (1)
1/8"=1'-0"

N

DEMOLITION LEGEND

SYMBOL	DESCRIPTION
	EXISTING PARTITION TO REMAIN
	EXISTING PARTITION AND DOOR TO BE DEMOLISHED

PLAN KEY NOTES (1)

GENERAL NOTES

1. DEMO ALL EXISTING GRID, TILES, DEVICES & LIGHTS THROUGHOUT TENANT PORTION OF SPACE.
2. DEMO ALL EXISTING MECHANICAL AND DUCT WORK THROUGHOUT TENANT PORTION OF SPACE.
3. REMOVE ALL FLOORING, TILE, WOOD PANELING, CABINETRY, BASE AND OTHER MISCELLANEOUS FINISH MATERIALS THROUGHOUT BUILDING.
4. REMOVE ALL ABANDONED CABLING, CONDUITS, DEVICES NOT SCHEDULED TO BE REUSED.
5. REFER TO STRUCTURAL FOR DEMOLITION OF ANY STRUCTURAL ELEMENTS SUCH AS CMU WALLS.
6. THE FIRE SPINKLER SYSTEM SHALL REMAIN IN SERVICE AT ALL TIMES DURING THE DEMOLITION UNLESS A SPECIAL PERMIT IS ISSUED BY THE FIRE DEPARTMENT.
7. REFER TO FLOOR PLANS FOR DIMENSIONS OF DOOR LOCATIONS TO DETERMINE AMOUNT OF DEMOLITION REQUIRED FOR NEW DOORS IN BLOCK WALLS.

KEY PLAN

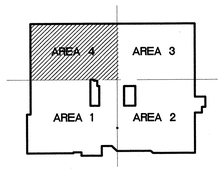

CARRIER JOHNSON

ARCHITECTURE
INTERIOR DESIGN
PLANNING

GORDON R. CARRIER AIA
MICHAEL C. JOHNSON AIA

WILLIAM C. BOCKEN AIA
DEBORAH P. ELLIOTT IIDA

2600 MICHELSON DRIVE
SUITE 400
IRVINE, CALIFORNIA
92612

TEL 949 955-2353
FAX 949 955-2377

1301 THIRD AVENUE
SAN DIEGO, CALIFORNIA
92101

TEL 619 239-2353
FAX 619 239-6227

RECORD DOCUMENTS
THESE DOCUMENTS RELEASED BY CARRIER JOHNSON FOR USE AS RECORD DOCUMENTS WILL SHOW THE REPORTED LOCATION OF THE WORK AND SIGNIFICANT CHANGES MADE DURING THE CONSTRUCTION PROCESS, AND ARE BASED ON UNVERIFIED INFORMATION PROVIDED BY THE CONTRACTOR AND OTHER PARTIES WHICH WILL BE ASSUMED RELIABLE. CARRIER JOHNSON CANNOT AND DOES NOT WARRANT THE ACCURACY AND/OR COMPLETENESS OF THIS INFORMATION AND SHALL NOT BE RESPONSIBLE FOR ANY ERRORS OR OMISSIONS WHICH MAY BE INCORPORATED THEREIN AS A RESULT. FUTURE CONSTRUCTION PLANNING MUST INCLUDE FIELD CONFIRMATION OF EXISTING CONDITIONS.

ONTARIO PD:: HEADQUARTERS

2534 S. ARCHIBALD AVE., ONTARIO, CALIFORNIA 91761

F13 Field Order #13 07.01.03
5 Addendum 5 04.21.2003
3 Addendum 3
2 Addendum 2/Bldg. Dept. Re-Submittal 03.20.2003
Building Dept. Submittal 02.24.2003

ISSUES:
DIRECTORY/FILE NUMBER: 4511.00
4511-A204
XREF'S DRAWINGS:
PROJECT NUMBER:
4511.00
DRAWN BY: CHECKED BY:
DATE:
1/23/03
SCALE:
AS NOTED
TITLE:
DEMO FLOOR PLAN FIRST LEVEL AREA 4

DRAWING NO:
A2.0.4 (2)

ALL IDEAS, DESIGN, ARRANGEMENTS AND PLANS INDICATED OR REPRESENTED BY THIS DRAWING ARE OWNED BY, AND THE PROPERTY OF CARRIER JOHNSON AND WERE CREATED, EVALUATED, AND DEVELOPED FOR USE IN CONNECTION WITH THIS PROJECT. NONE OF SUCH IDEAS, DESIGN, ARRANGEMENTS, OR PLANS SHALL BE USED BY, OR DISCLOSED TO ANY PERSON, FIRM, OR CORPORATION FOR ANY PURPOSE WHATSOEVER WITHOUT THE WRITTEN PERMISSION OF CARRIER JOHNSON. FILING THESE DRAWINGS OR SPECIFICATIONS WITH ANY PUBLIC AGENCY IS NOT A PUBLICATION OF SAME. NO COPYING, REPRODUCTION OR USE THEREOF IS PERMISSIBLE WITHOUT THE CONSENT OF CARRIER JOHNSON.

ALL IDEAS, DESIGN, ARRANGEMENTS AND PLANS INDICATED OR REPRESENTED BY THIS DRAWING ARE OWNED BY, AND THE PROPERTY OF CARRIER JOHNSON AND CULTURE + ARCHITECTURE, AND WERE CREATED, EVOLVED AND DEVELOPED FOR USE ON AND IN CONNECTION WITH THE SPECIFIED PROJECT. NONE OF SUCH IDEAS, DESIGNS, ARRANGEMENTS OR PLANS SHALL BE USED BY OR DISCLOSED TO ANY PERSON, FIRM OR CORPORATION FOR ANY PURPOSE WHATSOEVER WITHOUT THE PRIOR WRITTEN PERMISSION OF CARRIER JOHNSON. FILING THESE DRAWINGS OR SPECIFICATIONS WITH ANY PUBLIC AGENCY IS NOT A PUBLICATION OF SAME, NO COPYING, REPRODUCTION OR USE THEREOF IS PERMISSIBLE WITHOUT THE CONSENT OF CARRIER JOHNSON.

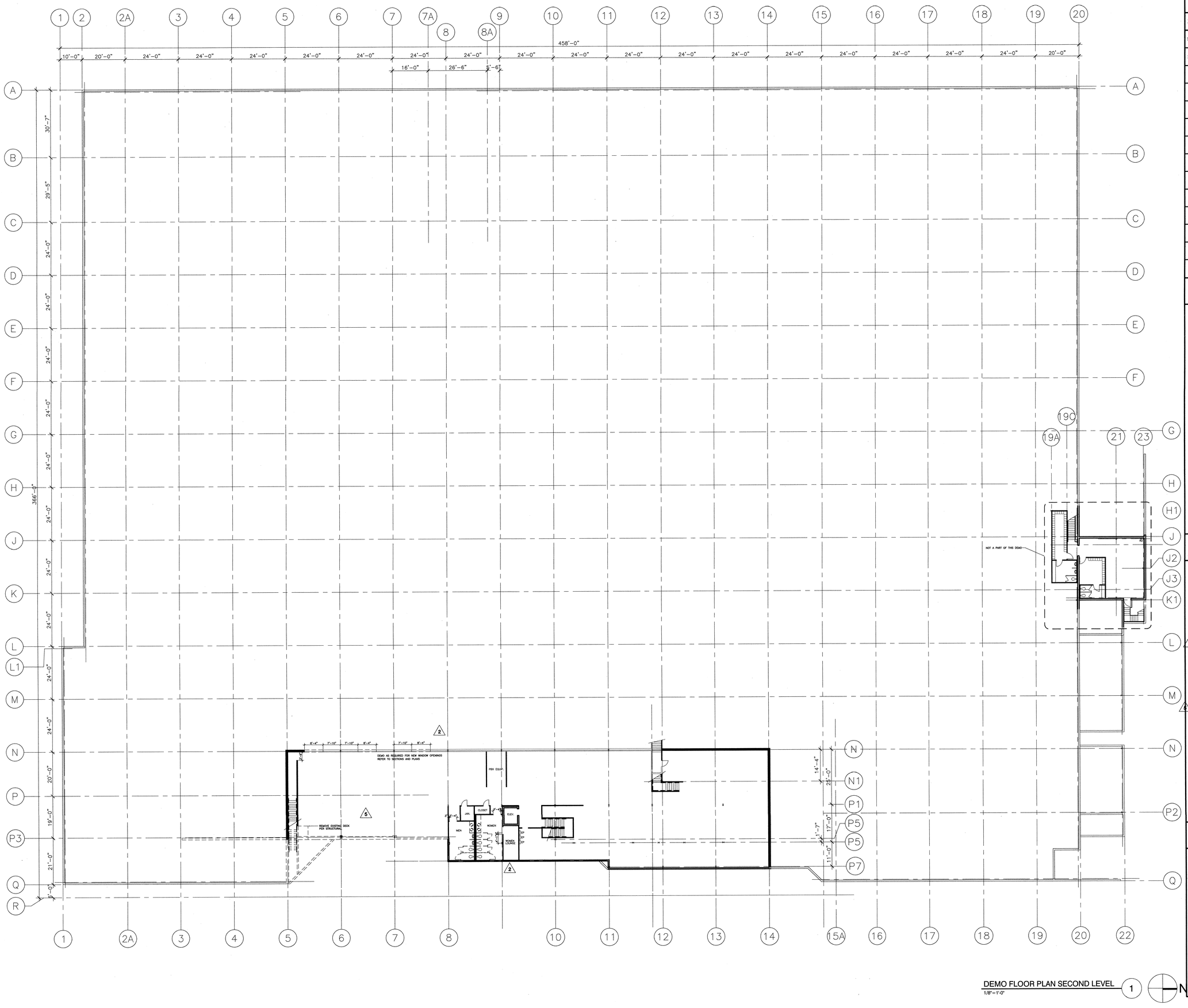

DEMO FLOOR PLAN SECOND LEVEL
1/8"=1'-0"

DEMOLITION LEGEND

SYMBOL	DESCRIPTION
	EXISTING PARTITION TO REMAIN
	EXISTING PARTITION AND DOOR TO BE DEMOLISHED

PLAN KEY NOTES

2

GENERAL NOTES

1. DEMO ALL EXISTING GRID, TILES, DEVICES & LIGHTS THROUGHOUT TENANT PORTION OF SPACE.
2. DEMO ALL EXISTING MECHANICAL AND DUCT WORK THROUGHOUT TENANT PORTION OF SPACE.
3. REMOVE ALL FLOORING, TILE, WOOD PANELING, CABINETRY, BASE AND OTHER MISCELLANEOUS FINISH MATERIALS THROUGHOUT BUILDING.
4. REMOVE ALL ABANDONED CABLING, CONDUITS, DEVICES NOT SCHEDULED TO BE REUSED.
5. REFER TO STRUCTURAL FOR DEMOLITION OF ANY STRUCTURAL ELEMENTS SUCH AS CMU WALLS.
6. THE FIRE SPINKLER SYSTEM SHALL REMAIN IN SERVICE AT ALL TIMES DURING THE DEMOLITION UNLESS A SPECIAL PERMIT IS ISSUED BY THE FIRE DEPARTMENT.
7. REFER TO FLOOR PLANS FOR DIMENSIONS OF DOOR LOCATIONS TO DETERMINE AMOUNT OF DEMOLITION REQUIRED FOR NEW DOORS IN BLOCK WALLS.

KEY PLAN

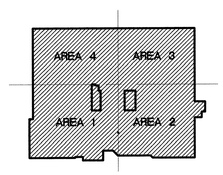

CARRIER JOHNSON
ARCHITECTURE
INTERIOR DESIGN
PLANNING
GORDON R. CARRIER AIA
MICHAEL C. JOHNSON AIA
WILLIAM C. BOCKEN AIA
DEBORAH P. ELLIOTT IIDA
2600 MICHELSON DRIVE
SUITE 400
IRVINE, CALIFORNIA
92612
TEL 949 955-2353
FAX 949 955-2377
1301 THIRD AVENUE
SAN DIEGO, CALIFORNIA
92101
TEL 619 239-2353
FAX 619 239-6227

RECORD DOCUMENTS
THESE DOCUMENTS RELEASED BY CARRIER JOHNSON FOR USE AS RECORD DOCUMENTS MAY CONTAIN MINOR DEVIATIONS FROM THE LOCATION OF THE WORK AND SIGNIFICANT CHANGES MADE DURING THE CONSTRUCTION PROCESS, AND ARE BASED ON UNVERIFIED INFORMATION PROVIDED BY THE CONTRACTOR AND OTHERS. THE CONTRACTOR SHALL REVIEW AND VERIFY ALL CARRIER JOHNSON CANNOT AND DOES NOT WARRANT THE ACCURACY AND/OR COMPLETENESS OF THE INFORMATION ABOVE SHALL BE INCORPORATED THEREIN AS A RESULT. FUTURE CONSTRUCTION PLANNING MUST INCLUDE FIELD CONFIRMATION OF EXISTING CONDITIONS.

ONTARIO PD:: HEADQUARTERS

2534 S. ARCHIBALD AVE., ONTARIO, CALIFORNIA 91761

3 Field Order #13 07.01.03
2 Addendum 5 04.21.2003
1 Addendum 3
2 Addendum 2/Bldg. Dept. Re-Submittal 03.20.2003
Building Dept. Submittal 02.24.2003

ISSUES:
DIRECTORY/FILE NUMBER: 4511.00
4511-A205
XREF'S DRAWINGS:
PROJECT NUMBER: 4511.00
DRAWN BY: CHECKED BY:
DATE:
SCALE: AS NOTED
TITLE: DEMO FLOOR PLAN SECOND LEVEL

DRAWING NO: A2.0.5

ALL IDEAS, DESIGN, ARRANGEMENTS AND PLANS INDICATED OR REPRESENTED BY THIS DRAWING ARE OWNED BY AND THE PROPERTY OF CARRIER JOHNSON AND WERE CREATED, EVOLVED AND DEVELOPED FOR USE ON AND IN CONNECTION WITH THE SPECIFIED PROJECT. NONE OF SUCH IDEAS, DESIGNS, ARRANGEMENTS OR PLANS SHALL BE USED BY OR DISCLOSED TO ANY PERSON, FIRM OR CORPORATION FOR ANY PURPOSE WHATSOEVER WITHOUT THE PRIOR WRITTEN PERMISSION OF CARRIER JOHNSON. FILING THESE DRAWINGS OR SPECIFICATIONS WITH ANY PUBLIC AGENCY IS NOT A PUBLICATION OF SAME. NO COPYING, REPRODUCTION OR USE THEREOF IS PERMISSIBLE WITHOUT THE CONSENT OF CARRIER JOHNSON.

PARTITION LEGEND

SYMBOL	DESCRIPTION
A	ONE HOUR FIRE RATED PARTITION; A/A8.0.1
B	NON-RATED FULL HEIGHT PARTITION; B/A8.0.1
B2	NON-RATED FULL HEIGHT PARTITION W/INSULATION; B/A8.0.1
C	NON-RATED PARTITION TO 6" ABOVE FINISHED CEILING W/INSULATION; C/A8.0.1
C2	NON-RATED PARTITION TO 6" ABOVE FINISH CEILING W/INSULATION; C/A8.0.1
C3	NON-RATED FULL HEIGHT PARTITION W/INSULATION; B/A8.0.1
D	NON-RATED PARTITION TO 6" ABOVE FINISHED CEILING; C/A8.0.1
D2	NON-RATED FULL HEIGHT PARTITION; B/A8.0.1
D3	NON-RATED PARTITION TO 6" ABOVE FINISHED CEILING; —C/A8.0.1
E	FULL HEIGHT PARTION W/BALISTIC MATERIAL TO 8'-0" A.F.F.; —/A8.0.1
F	2 HOUR RATED PARTITION F/A8.0.1
G	PLUMBING CHASE WALL G/A8.0.1
H	PARTIAL HEIGHT WALL H/A8.0.1
J	WALL FURRING J/A8.0.1
K	NON-RATED PARTITION K/A8.0.1
	EXISTING PARTITION TO REMAIN
	EXISTING BLOCK WALL TO REMAIN
X	WIRE MESH PARTITIONS/DOORS TO 12'-0" A.F.F.

NOTE: PROVIDE 6" STUDS WHERE REQUIRED BY PLUMBING OR EQUIPMENT

XXXX	DOOR NUMBER AND/OR "E" = EXISTING TO REMAIN "CR" = CARD READER
F.E.C.	FIRE EXTINGUISHER CABINETS-REFER TO DETAIL 1/A8.0.2

PLAN KEY NOTES

1. PROVIDE HEAVY DUTY STANDARD & BRACKETS, 6 @ 15" DEEP (UNLESS NOTED OTHERWISE) MELAMINE ADJUSTABLE SHELVES, STOP TRACK 12" FROM FLOOR AND CEILING. PROVIDE METAL BACKING AS REQUIRED.

   PROVIDIE ALTERNATE PRICE FOR METAL SHELVING RACKS; NATIONAL MATERIAL HANDLING PRODUCTS; 1-800-676-5161; 36"X12"X87" #HC-636-12 (OR EQUAL), DEPTH TO VARY BASED ON PLAN DIMENSIONS.
2. COAT ROD AND SHELF; REFER TO DETAIL 20/A8.0.2.
3. CMU TO GYPSUM JOINT, REFER TO DETAIL 4/A8.0.2.
4. VERIFY EXISTING WALL TYPE, MODIFY AS REQUIRED TO MEET WALL TYPE "A" — ONE HOUR RATED WALL.
5. NEW BLOCK WALL INFILL TO MATCH EXISTING COLOR, SIZE AND GROUT JOINTS.
6. LAMINATE ONE LAYER 5/8" TYPE "X" GYPSUM BOARD OVER EXISTING BLOCK WALL.
7. PROVIDE 2-HOUR FIRE PROOFING SPRAY ON ROOF STRUCTURE AND ROOM DECK 5'-0" EACH SIDE OF 2-HOUR WALL.
8. LEVEL 3 BALLISTIC GLAZING.
9. SHOWER FLOORS: REFER TO DETAILS 11, 15 AND 16, SHEET A8.0.5.
10. ACCESS FLOORING DETAILS REFER TO SHEET A8.0.6.
11. ADD 16 GA. SECURITY MESH BETWEEN STUD AND GYPSUM BOARD.
12. PROVIDE WRAPPED OPENING IN THE CENTER OF THE OFFICE ELEVATION IN WIDTH. OPENING TO BE 18" X 18" WITH LEDGE AT 42" A.F.F.
13. EACH "DESK" AREA TO HAVE BUTTON "BUZZ" TO PROVIDE ACCESS THROUGH DOOR #1106
14. PROIVDE 36"WX60"H 20 MIN. RATE FIRE ROLLING DOOR; SILL AT 34" AFF; CONNECT TO FIRE ALARM SYSTEM

PLAN GENERAL NOTES

1. ALL WALLS TO BE WALL TYPE "D" CONSTRUCTION UNLESS NOTED OTHERWISE.
2. WHERE NEW BLOCK WALLS ARE REQUIRED; MATCH EXISTING AND ALIGN FINISH FACE.
3. CLEAN EXISTING BLOCK WALLS NOTED TO REMAIN AND PREP FOR PAINT, HIGH GLOSS FINISH.
4. RE: DETAIL 1/A8.0.1 FOR CORRIDORS NOTED TO BE "ONE HOUR RATED CORRIDORS" (SIMILAR CONDITIONS AS REQUIRED).
5. ALL DOOR JAMBS AT HINGE SIDE TO BE 6" AT ALL PERPENDICULAR DRYWALL PARTITION LOCATIONS UNLESS OTHERWISE NOTED.
6. PROVIDE METAL BACKING AS REQUIRED AT INTERIOR PARTITION FOR ALL COUNTERTOPS, CHAIR RAILS AND WALL MOUNTED ACCESSORIES; REFER TO DETAIL 12/A8.0.4.
7. ALL DIMENSIONS ARE FINISH FACE UNLESS NOTED OTHERWISE.
8. ALL FIRE EXTINGUISHER QUANTITIES/LOCATIONS MUST BE APPROVED BY FIRE MARSHALL PRIOR TO INSTALLATION. REFER TO DETAIL 1/A8.0.2.
9. ALL DIMENSIONS ARE MINIMUM DIMENSIONS. NOTIFY ARCHITECT OF ANY DIMENSIONAL BUSTS.
10. PATCH AND REPAIR ALL EXSITNG GYPSUM BOARD SURFACES, SAND AND SMOTH FOR NEW PAINT FINISH AS NOTED ON FINISH PLANS. FINISH WALLS FOR LEVEL R FINISH.
11. REFER TO MOUNTING HEIGHT SCHEDULE ON SHEET A0.4 FOR DEVICE AND ACCESSORY HEIGHT LOCATIONS.

KEY PLAN

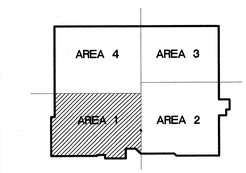

FLOOR PLAN AREA 1
1/8"=1'-0"

ARCHITECTURE
INTERIOR DESIGN
PLANNING

CARRIER JOHNSON

GORDON R. CARRIER AIA
MICHAEL C. JOHNSON AIA

WILLIAM C. BOCKEN AIA
DEBORAH P. ELLIOTT IIDA

2600 MICHELSON DRIVE
SUITE 400
IRVINE, CALIFORNIA
92612

TEL 949 955-2353
FAX 949 955-2377

1301 THIRD AVENUE
SAN DIEGO, CALIFORNIA
92101

TEL 619 239-2353
FAX 619 239-6227

RECORD DOCUMENTS
THESE DOCUMENTS RELEASED BY CARRIER JOHNSON FOR CONSTRUCTION PURPOSES ONLY AFTER THE CONTRACTOR'S LOCATION OF THE WORK AND SIGNIFICANT CHANGES MADE DURING THE CONSTRUCTION PROCESS, AND ARE BASED ON UNVERIFIED INFORMATION PROVIDED BY THE CONTRACTOR AND/OR OTHER CONSULTANTS. CARRIER JOHNSON CANNOT AND DOES NOT WARRANT THE ACCURACY AND/OR COMPLETENESS OF THE INFORMATION CONTAINED IN THESE DOCUMENTS AND SHALL NOT BE LIABLE FOR OMISSIONS WHICH MAY BE INCORPORATED THEREIN AS A RESULT. FUTURE CONSTRUCTION OR EXISTING CONDITIONS.

ONTARIO PD:: HEADQUARTERS

2534 S. ARCHIBALD AVE., ONTARIO, CALIFORNIA 91761

Field Order #13 07.01.03
5 Addendum 5 04.21.2003
3 Addendum 3
2 Addendum 2/Bldg. Dept. Re-Submittal 03.20.2003
Building Dept. Submittal 02.24.2003

ISSUES:
DIRECTORY/FILE NUMBER: 4511-A211
XREF'S DRAWINGS:
PROJECT NUMBER: 4511.00
DRAWN BY: CHECKED BY:
DATE: 2/13/03
SCALE: 1/8" = 1'-0"
TITLE: FLOOR PLAN FIRST LEVEL AREA 1

DRAWING NO: A2.1.1

5

ALL IDEAS, DESIGN, ARRANGEMENTS AND PLANS INDICATED OR REPRESENTED BY THIS DRAWING ARE OWNED BY, AND ARE THE PROPERTY OF CARRIER JOHNSON AND WERE CREATED, EVOLVED AND DEVELOPED FOR USE ON AND IN CONNECTION WITH THE SPECIFIED PROJECT. NONE OF SUCH IDEAS, DESIGN, ARRANGEMENTS OR PLANS SHALL BE USED BY OR DISCLOSED TO ANY PERSON, FIRM OR CORPORATION FOR ANY PURPOSE WHATSOEVER WITHOUT THE WRITTEN PERMISSION OF CARRIER JOHNSON. FILING THESE DRAWINGS OR SPECIFICATIONS WITH ANY PUBLIC AGENCY IS NOT A PUBLICATION OF SAME. NO COPYING, REPRODUCTION OR USE THEREOF IS PERMISSIBLE WITHOUT THE CONSENT OF CARRIER JOHNSON.

MATCH LINE

MATCH LINE

FINISH PLAN AREA 1
1/8" = 1'-0"

FINISH PLAN LEGEND

SYMBOL	DESCRIPTION
	FLOORING TRANSITIONS; REFER TO SHEET A8.0.5 FOR DETAILS
#	REFER TO SHEET A-2.3.0 FOR FINISH LEGEND DESIGNATION
#	REFER TO SHEET A-2.3.0 FOR FINISH LEGEND DESIGNA1.ON
#	REFER TO FINISH KEYNOTES
CG	CORNER GUARDS
	CRASH RAIL, REFER TO DETAIL 7/A8.0.5

PLAN KEY NOTES

1. ONTARIO PD BADGE LOGO TO BE WATER-JET CUT AS PER DETAIL DRAWINGS USING SPECIFIED SIZE, COLOR AND MATERIAL AS NOTED ON FINISH SCHEDULE. WATER-JET CUTTING TO BE PROVIDED BY SPEC CERAMICS, INC., 1021 LACY ST., ANAHEIM, CA 92805, CONTACT: GAIL KELLY, (949) 808-0134.
2. WALLS IN I.D. WORKROOM TO BE P-1, EPOXY.
3. VISUALLY IMPAIRED STRIPS SHALL BE INSTALLED ON THE UPPER APPROACH AND THE LOWER TREAD, A MINIMUM OF 2" IN WIDTH A MAXIMUM OF 1" FROM THE TREAD NOSE OR LANDING.
4. EXISTING WALL TILE SURFACES AND GROUT JOINTS TO BE RESURFACED. CLEAN AND PREPP FOR NEW EPOXY FINISH COATING.

GENERAL NOTES

1. WHERE VCT 1 – 5 ARE SPECIFIED COLLECTIVELY INSTALL PATTERN RANDOM ,QUARTER-TURNED, WITH THE FOLLOWING QUANTITIES:

VCT-1 45%
VCT-2 20%
VCT-3 9%
VCT-4 9%
VCT-5 7%

VCT-3 VCT-5 VCT-1 VCT-2 VCT-2

2. REFER TO STONE BASE DETAILS 5 & 7/A8.0.4 WHEN STONE BASE IS SPECIFIED.

KEY PLAN

AREA 4 | AREA 3
AREA 1 | AREA 2

CARRIER JOHNSON
ARCHITECTURE
INTERIOR DESIGN
PLANNING

GORDON R. CARRIER AIA
MICHAEL C. JOHNSON AIA

WILLIAM C. BOCKEN AIA
DEBORAH P. ELLIOTT IIDA

2600 MICHELSON DRIVE
SUITE 400
IRVINE, CALIFORNIA
92612

TEL 949 955-2353
FAX 949 955-2377

1301 THIRD AVENUE
SAN DIEGO, CALIFORNIA
92101

TEL 619 239-2353
FAX 619 239-6227

RECORD DOCUMENTS
THESE DOCUMENTS RELEASED BY CARRIER JOHNSON FOR USE BY CONTRACTOR AND SUBCONTRACTORS TO REFLECT LOCATION OF THE WORK AND SIGNIFICANT CHANGES MADE DURING THE CONSTRUCTION PROCESS, AND ARE BASED ON LIMITED FIELD OBSERVATIONS AND INFORMATION PROVIDED BY AND OTHER PARTIES WHICH WILL BE ASSUMED RELIABLE. CARRIER JOHNSON CANNOT AND DOES NOT WARRANT THE COMPLETENESS, ACCURACY OR CONSISTENCY OF SUCH INFORMATION AND SHALL NOT BE RESPONSIBLE FOR ANY ERRORS OR OMISSIONS WHICH MAY BE INCORPORATED THEREIN AS A RESULT OF RELIANCE ON SUCH INFORMATION. IT MUST INCLUDE FIELD CONFIRMATION OF EXISTING CONDITIONS.

ONTARIO PD:: HEADQUARTERS

2534 S. ARCHIBALD AVE., ONTARIO, CALIFORNIA 91761

Field Order #13 07.01.03
5 Addendum 5 04.21.2003
3 Addendum 3
2 Addendum 2/Bldg. Dept. Re-Submittal 03.20.2003
Building Dept. Submittal 02.24.2003
ISSUES:
DIRECTORY/FILE NUMBER: 4511-A211FP

XREF'S DRAWINGS:

PROJECT NUMBER: 4511.00
DRAWN BY: CHECKED BY:
DATE: 2/24/03
SCALE: 1/8" = 1'-0"
TITLE: FINISH PLAN FIRST LEVEL AREA 1

DRAWING NO: A2.1.1FP

ALL IDEAS, DESIGN ARRANGEMENTS, OR PLANS INDICATED OR REPRESENTED BY THIS DRAWING, AT ALL TIMES REMAIN THE PROPERTY OF CARRIER JOHNSON AND SHALL NOT BE USED BY, OR DISCLOSED TO ANY PERSON, FIRM, OR CORPORATION FOR ANY PURPOSE WHATSOEVER WITHOUT THE WRITTEN PERMISSION OF CARRIER JOHNSON. FILING THESE DRAWINGS OR SPECIFICATIONS WITH ANY PUBLIC AGENCY IS NOT A PUBLICATION OF SAME. NO COPYING, REPRODUCTION OR USE THEREOF IS PERMISSIBLE WITHOUT THE CONSENT OF CARRIER JOHNSON.

MATCH LINE

TEAMING 1514 · COPS & GANGS OPEN OFFICE 1507 · COPS & GANGS OPEN OFFICE 1508 · PLANNING/ BREIFING 1515 · HALL 1502 · COPS SGT. 1506 · COPS SGT. 1505 · COPS LT. 1504 · DAB & ALARM TECH OFFICE 1503 · LT.'S OPEN OFFICE 1407 · MONITOR ROOM 1408 · OPEN OFFICE 1406 · HALL 1403 · TRAINING SGT. 1304 · TRAINING CORP. 1306 · EXPANSION/ SUPPLIES/FILES 1405 · REC. & PERS. SRGT. 1404 · TRAINING OPEN OFFICE 1305 · TRAINING OPEN OFFICE 1303 · TRAINING OPEN OFFICE 1307 · WORK AREA 1308 · STOR. 1309 · TRAINING/ LIBRARY 1302 · MEDIA/VIDEO PROD. ROOM 1313 · TRAINING STOR./MAT. 1312 · HALL 1301 · STOR. 1311 · ONE-HOUR RATED CORRIDOR 1209 · COMPUTER TRAINING ROOM 1204 · SERV. ROOM 1205 · STORAGE ROOM 1206 · SERV. ROOM 1207 · STORAGE ROOM 1208 · MULTI-PURPOSE COMMUNITY ROOM #2 1203 · MULTI-PURPOSE COMMUNITY ROOM #1 1202 · ONE-HOUR RATED CORRIDOR 1401 · ONE-HOUR RATED CORRIDOR 1402 · ONE-HOUR RATED CORRIDOR 1201 · ISSUE ROOM 1609 · R/O. MEETING ROOM 1608 · PROVIDE 6 J-BOX FOR WALL MOUNTED T.V.'S THIS ELEVATION · PARTOL CONF. ROOM 1607 · WOMEN'S STAFF TLTS 1605 · MEN'S STAFF TLTS 1606 · ONE-HOUR RATED VESTIBULE 1604 · IDF 1615 · BREIFING STORAGE 1614 · JAN. ROOM 1603 · ONE-HOUR RATED CORRIDOR 1601 · CRIME PREV STOR 1812 · INT./ POLYGRAPH 1813 · INT./ POLYGRAPH 1814 · SM. EVID VIEWING 1815 · VEST. 1816 · F. PRINT/ MAIL 1817 · ONE-HOUR RATED CORRIDOR 1602 · MAIL/STAFF COUNTER 1818 · COPY CENTER 1819 · OPTICAL TECH. ROOM 1821 · CRIME PREVENTION OPEN OFFICE 1811 · RECORDS COUNTER 1807 · RECORDS COUNTER 1806 · 2 DRAWER LATERAL FILES WITH 200 SLOTS ABOVE · EXPLORER OFFICE/STORAGE 1809 · VOLUNTEER OFFICE 1808 · PUBLIC LOBBY 1106 · FRONT COUNTER 1805 · FORMS 1804 · TELEPHONE SWITCHBOARD OPERATOR 1803 · HALL 1802 · ONE-HOUR RATED CORRIDOR 1201 · PUBLIC CORRIDOR 1105 · PUBLIC CORRIDOR 1107 · WOMEN'S PUBLIC RESTROOM 1104 · MEN'S PUBLIC RESTROOM 1102 · JAN. ROOM 1103 · PUBLIC LOBBY 1100 · COMMUNICATIONS EQUIPMENT ROOM 1101 · ALTERED STAIR 01 · ANNUNCIATOR BOXES · INT. ROOM 1109 · INT. ROOM 1111 · SOFT INT. ROOM 1108 · GALLERY STORAGE 1114 · STORAGE 1902 · GALLERY 1113 · EXHIBIT 1112 · ONE-HOUR RATED CORRIDOR 1903 · ONE-HOUR RATED LOBBY 1901 · ELEV. 01 · EXISTING STAIR 02 · RECPT./ LOBBY 1905 · INT. ROOM 1913 · INT. ROOM 1912 · INT. ROOM 1904 · OPEN OFFICE 1907 · EP ELEC. ROOM EP-1911 · MECH. ROOM 1909 · STORAGE 1908 · ONE-HOUR RATED CORRIDOR 1701 · OPEN OFFICE 1906 · OPEN OFFICE 1822 · OPEN OFFICE 1827 · OPEN OFFICE 1828 · OPEN OFFICE 1826 · RECORDS SUPER. 1824 · RECORDS MGR. 1825 · ONE-HOUR RATED CORRIDOR 1801 · SERVICES CAPTAIN 1714 · INVEST. CAPTAIN 1713 · OPEN OFFICE 1708 · FUTURE DROP · COURTYARD 1702 · EXEC. CONF. ROOM 1712 · T.A. INTERVIEW 1711 · INTELL DET. (2) 1709 · OPEN OFFICE 1707 · 1703 · 1613

EQUIPMENT SCHEDULE

NO.	NAME	MANUF.	MODEL NO.	SIZE	PROV. BY:	INSTAL. BY:
1	COPIER	–	–	–	TENT.	TENT.
2	LASER PRINTER	–	–	–	TENT.	TENT.
3	FAX MACHINE	–	–	–	TENT.	TENT.
4	PLOTTER	–	–	–	TENT.	TENT.
5	SCANNER	–	–	–	TENT.	TENT.
6	SHREDDER	–	–	–	TENT.	TENT.
7	TYPEWRITER	–	–	–	TENT.	TENT.
8	MICROWAVE	–	JEM25GY* BLACK	–	TENT.	TENT.
9	COFFEE MACHINE	–	–	–	TENT.	TENT.
10	REF./FREEZER	–	–	–	TENT.	TENT.
11	UNDER-COUNTER REFRIGERATOR	ULINE	29R-BLACK (HT. CANNOT EXCEED 32"AFF OVERALL)		TENT.	TENT.
12	REFRIGERATOR	–	–	–	TENT.	TENT.
13	FREEZER	–	–	–	TENT.	TENT.
14	UNDER-COUNTER DISHWASHER	ASKO	D1876 BLACK ADA	24"X24"X 32-1/4"	CNTR.	CNTR.
15	GARBAGE DISPOSAL	ISE W/ SINKRTR.	PRO 77 / APPR. EQUAL		CNTR.	CNTR.
16	VENDING MACHINE	–	–	–	TENT.	TENT.
17	VENDING MACH. W/FLOOR DRAIN	–	–	–	TENT.	TENT.
18	SOAP DISPENSER	BOBRICK	B4112 SURFACE	SATIN, SS FINISH	CNTR.	CNTR.
19	PAPER TOWEL DISPENSER	BOBRICK	B4262 SURFACE	SATIN, SS FINISH	CNTR.	CNTR.
20	MANUAL PROJECTION SCREEN	–	–	–	TENT.	TENT.
21	ELECTRICAL PROJECTION SCREEN	–	–	–	TENT.	TENT.
22	SECURITY EQUIPMENT	–	–	–	TENT.	TENT.
23	T.V./CABLE	PROVIDE OUTLET; STD. HEIGHT	CABLE AND POWER		TENT.	TENT.
24	WALL MOUNTED T.V./ CABLE OUTLET	+96 AFF; PROVIDE CABLE AND POWER	BRACKET BY G.C.		TENT.	G.C.
25	FUME HOOD	–	–	–	TENT.	TENT.
26	DRYING MACHINE	–	–	–	TENT.	TENT.
27	HIGH DENSITY MANUAL FILE	SPACE-SAVER	–	–	CNTR.	CNTR.
28	WEAPON LOCKER	SIRCHIE GROUP	426-40; #SSB		CNTR.	CNTR.
29	CEILING MOUNTED TV	–	–	–	TENT.	TENT.
30	SECURITY CAMERA	–	–	–	TENT.	TENT.
30A	AUDIBLE SECURITY CAM	–	–	–	TENT.	TENT.
31	EMERGENCY CALL BOX	–	–	–	CNTR.	CNTR.
32	PAY PHONE	–	–	–	CNTR.	CNTR.
33	PLOTTER	–	–	–	TENT.	TENT.
34	TV/VCR	STANDARD	HEIGHT; NO CABLE		TENT.	TENT.

PLAN KEY NOTES

1. MONITOR FOR CAMERA LOCATED IN ROOM #1711 IS LOCATED IN THIS ROOM.
2. MONITORS FOR ALL HOLDING CELL CAMERA'S IS LOCATED IN THIS ROOM; WALL MOUNTED.
3. MONITORS FOR CAMERA'S LOCATED IN ROOMS 1109, 1111, 1108, 2126, 1904, 1913 AND 1912 ARE LOCATED IN THIS ROOM; WALL MOUNTED.
4. MONITORS FOR CAMERA'S LOCATED IN ROOMS 1813 AND 1814 ARE LOCATED IN THIS ROOM; WALL MOUNTED.
5. MONITORS FOR CAMERA'S LOCATED IN ROOMS 4302, 4334, 4202 AND 4203 ARE LOCATED IN THIS ROOM; WALL MOUNTED.
6. T.V. /CABLES

GENERAL NOTES

1. CONTRACTOR TO PROVIDE CONDUIT, RING & PULL-STRING FOR ALL TEL./DATA RECEPTACLES.
2. ALL NEW RECEPTACLE COVER PLATES TO BE WHITE.
3. CONTRACTOR SHALL REPAIR ANY DAMAGED CONSTRUCTION ADJACENT TO ALL ELECTRICAL WORK.
4. ALL OUTLETS & RECEPTACLES INSTALLED ABOVE COUNTERTOPS TO BE MOUNTED VERTICALLY, U.N.O.
5. ELECTRICAL CONTRACTOR TO COORDINATE ELECTRICAL INSTALLATION W/ OTHER SUBCONTRACTORS & SHALL BEAR ANY COST ASSOCIATED W/ THE RELOCATION OF ANY EQUIPMENT INSTALLED WHICH CONFLICTS W/ OTHER EQUIPMENT.
6. ALL OUTLETS & TEL./DATA LINES TO BE GROUPED TOGETHER W/ A MAXIMUM SEPARATION OF 6"–8" O.C., U.N.O.
7. PROVIDE POWER TO SYSTEMS FURNITURE FOR TEL./DATA HOOKUP. SYSTEMS FURNITURE MANUFACTURER TO SUPPLY POWER FEEDS TO CONNECT POWER & SYSTEMS FURN. REFER TO PLAN FOR APPROX. LOCATIONS. PROVIDE SUFFICIENT CIRCUIT'S / AMPS TO POWER GROUPS OF WORKSTATIONS. COORDINATE W/ SYSTEMS FURNITURE MANUF. / INSTALLER. ALL AMP BOXES/CORE LOCATIONS SHALL BE MARKED AT THE FLOOR AND FIELD VERIFIED BY THE FURNITURE VENDOR PRIOR TO INSTALLATION.
8. OUTLETS & SWITCHING – TYPICAL DIAGRAM PROVIDED FOR MOUNTING HEIGHTS & LOCATIONS – ALL VARIATIONS TO BE REVIEWED BY CJ & TENANT. G.C. & SUBCONTRACTORS SHALL BEAR ANY COST ASSOCIATED W/ THE RELOCATION OF INCORRECT OUTLET LOCATIONS.
9. GC TO PROVIDE & INSTALL ONE THERMOSTAT FOR EVERY HVAC ZONE. REFER TO MECHANICAL DWG.'S FOR LOCATIONS. GC IS NOT TO INSTALL T–STATS UNTIL LOCATIONS HAVE BEEN REVIEWED BY ARCHITECT IN THE FIELD. REFER TO MOUNTING HEIGHT SCHEDULE PROVIDED ON SHEET A0.4.
10. PROVIDE PAPER TOWEL & SOAP DISPENSER AT ALL SINK LOCATIONS. REFER TO INTERIOR ELEVATIONS. REFER TO SPECIFICATION IN ACCESSORY LEGEND, SHEET A4.1.0, LETTERS W & Z.
11. ALL APPLIANCES TO BE WHITE, U.N.O.
12. CENTER OF ALL SWITCH PLATES, T–STATS, ETC. TO BE CENTER AT 38" A.F.F.
13. CONTRACTOR TO PROVIDE SUPPORT AND BACKING TO ALL TENANT PROVIDED WALL MOUNTED MONITORS AND T.V.'S; REFER TO EQUIPMENT AND ELECTRICAL POWER PLANS FOR LOCATIONS.

KEY PLAN

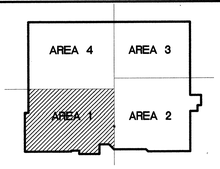

FLOOR PLAN AREA 1
1/8" = 1'-0"

ARCHITECTURE
INTERIOR DESIGN
PLANNING

CARRIER JOHNSON

GORDON R. CARRIER AIA
MICHAEL C. JOHNSON AIA

WILLIAM C. BOCKEN AIA
DEBORAH P. ELLIOTT IIDA

2600 MICHELSON DRIVE SUITE 400
IRVINE, CALIFORNIA 92612
TEL 949 955-2353
FAX 949 955-2377

1301 THIRD AVENUE
SAN DIEGO, CALIFORNIA 92101
TEL 619 239-2353
FAX 619 239-6227

RECORD DOCUMENTS
THE INFORMATION CONTAINED HEREIN IS THE PROPERTY OF CARRIER JOHNSON FOR USE AS RECORD DOCUMENTS WILL SHOW THE REPORTED LOCATION OF THE WORK AND SIGNIFICANT CHANGES MADE DURING THE CONSTRUCTION PROCESS, AND ARE BASED ON INFORMATION FURNISHED BY THE CONTRACTOR AND OTHERS AND OTHER PARTIES WHICH WILL BE ASSUMED RELIABLE. CARRIER JOHNSON CANNOT AND DOES NOT WARRANT THE ACCURACY OF THIS INFORMATION AND SHALL NOT BE RESPONSIBLE FOR ANY ERRORS OR OMISIONS WHICH MAY BE INCORPORATED THEREIN AS A RESULT. FUTURE CONSTRUCTION PLANNING MUST INCLUDE FIELD CONFIRMATION OF EXISTING CONDITIONS.

ONTARIO PD :: HEADQUARTERS

2534 S. ARCHIBALD AVE., ONTARIO, CALIFORNIA 91761

Addenda 5

Field Order #13
~~Field Order 6~~ 05.27.2003
5 Addendum 5 04.21.2003
3 Addendum 3
2 Addendum 2/Bldg. Dept. Re-Submittal 03.20.2003
Building Dept. Submittal 02.24.2003

ISSUES:
DIRECTORY/FILE NUMBER: 4511–A211FE
XREF'S DRAWINGS:
PROJECT NUMBER: 4511.00
DRAWN BY: CHECKED BY:
DATE: 2/24/03
SCALE: 1/8" = 1'-0"
TITLE: FURNITURE AND EQUIPMENT PLAN FIRST LEVEL AREA 1

DRAWING NO: A2.1.1FE 5

ALL IDEAS, DESIGN, ARRANGEMENT OF PLANS INCLUDED IN THESE DRAWINGS AND SPECIFICATIONS, AND ALL RIGHTS THEREIN ARE THE EXCLUSIVE PROPERTY OF CARRIER JOHNSON. NO PART OF THESE DRAWINGS OR SPECIFICATIONS WITH ANY PUBLIC AGENCY IS NOT A PUBLICATION OF SAME. NO COPYING, REPRODUCTION OR USE THEREOF IS PERMISSIBLE WITHOUT THE CONSENT OF CARRIER JOHNSON. ANY PERSON, FIRM, OR CORPORATION FOR ANY PURPOSE WHATSOEVER WITHOUT THE WRITTEN PERMISSION OF CARRIER JOHNSON, FILING THESE DRAWINGS OR SPECIFICATIONS WITH ANY PUBLIC AGENCY IS NOT A PUBLICATION OF SAME. NO COPYING, REPRODUCTION OR USE THEREOF IS PERMISSIBLE WITHOUT THE CONSENT OF CARRIER JOHNSON.

PARTITION LEGEND

SYMBOL	DESCRIPTION
A	ONE HOUR FIRE RATED PARTITION; A/A8.0.1
B	NON-RATED FULL HEIGHT PARTITION; B/A8.0.1
B2	NON-RATED FULL HEIGHT PARTITION W/INSULATION; B/A8.0.1
C	NON-RATED PARTITION TO 6" ABOVE FINISHED CEILING W/INSULATION; C/A8.0.1
C2	NON-RATED PARITION TO 6" ABOVE FINISH CEILING W/INSULATION; C/A8.0.1
C3	NON-RATED FULL HEIGHT PARTITION W/INSULATION; B/A8.0.1
D	NON-RATED PARTITION TO 6" ABOVE FINISHED CEILING; C/A8.0.1
D2	NON-RATED FULL HEIGHT PARTITION; B/A8.0.1
D3	NON-RATED PARTITION TO 6" ABOVE FINISHED CEILING; -C/A8.0.1
E	FULL HEIGHT PARTION W/BALISTIC MATERIAL TO 8'-0" A.F.F.; -/A8.0.1
F	2 HOUR RATED PARTITION F/A8.0.1
G	PLUMBING CHASE WALL G/A8.0.1
H	PARTIAL HEIGHT WALL H/A8.0.1
J	WALL FURRING J/A8.0.1
K	NON-RATED PARTITION K/A8.0.1
	EXISTING PARTITION TO REMAIN
	EXISTING BLOCK WALL TO REMAIN
X	WIRE MESH PARTITIONS/DOORS TO 12'-0" A.F.F.

NOTE: PROVIDE 6" STUDS WHERE REQUIRED BY PLUMBING OR EQUIPMENT

XXXX	DOOR NUMBER AND/OR "E" = EXISTING TO REMAIN "CR" = CARD READER
F.E.C.	FIRE EXTINGUISHER CABINETS–REFER TO DETAIL 1/A8.0.2

PLAN KEY NOTES

1. PROVIDE HEAVY DUTY STANDARD & BRACKETS, 6 @ 15" DEEP (UNLESS NOTED OTHERWISE) MELAMINE ADJUSTABLE SHELVES, STOP TRACK 12" FROM FLOOR AND CEILING. PROVIDE METAL BACKING AS REQUIRED.

   PROVIDIE ALTERNATE PRICE FOR METAL SHELVING RACKS; NATIONAL MATERIAL HANDLING PRODUCTS; 1–800–676–5161; 36"X12"X87" #HC–636–12 (OR EQUAL), DEPTH TO VARY BASED ON PLAN DIMENSIONS.
2. COAT ROD AND SHELF; REFER TO DETAIL 20/A8.0.2.
3. CMU TO GYPSUM JOINT, REFER TO DETAIL 4/A8.0.2.
4. VERIFY EXISTING WALL TYPE, MODIFY AS REQUIRED TO MEET WALL TYPE "A" – ONE HOUR RATED WALL.
5. NEW BLOCK WALL INFILL TO MATCH EXISTING COLOR, SIZE AND GROUT JOINTS.
6. LAMINATE ONE LAYER 5/8" TYPE "X" GYPSUM BOARD OVER EXISTING BLOCK WALL.
7. PROVIDE 2–HOUR FIRE PROOFING SPRAY ON ROOF STRUCTURE AND ROOM DECK 5'–0" EACH SIDE OF 2–HOUR WALL.
8. LEVEL 3 BALLISTIC GLAZING.
9. SHOWER FLOORS: REFER TO DETAILS 11, 15 AND 16, SHEET A8.0.5.
10. ACCESS FLOORING DETAILS REFER TO SHEET A8.0.6.
11. ADD 16 GA. SECURITY MESH BETWEEN STUD AND GYPSUM BOARD.
12. PROVIDE WRAPPED OPENING IN THE CENTER OF THE OFFICE ELEVATION IN WIDTH. OPENING TO BE 18" X 18" WITH LEDGE AT 42" A.F.F.
13. EACH "DESK" AREA TO HAVE BUTTON "BUZZ" TO PROVIDE ACCESS THROUGH DOOR #1106
14. PROIVDE 36"WX60"H 20 MIN. RATE FIRE ROLLING DOOR; SILL AT 34" AFF; CONNECT TO FIRE ALARM SYSTEM

PLAN GENERAL NOTES

1. ALL WALLS TO BE WALL TYPE "D" CONSTRUCTION UNLESS NOTED OTHERWISE.
2. WHERE NEW BLOCK WALLS ARE REQUIRED; MATCH EXISTING AND ALIGN FINISH FACE.
3. CLEAN EXISTING BLOCK WALLS NOTED TO REMAIN AND PREP FOR PAINT, HIGH GLOSS FINISH.
4. RE: DETAIL 1/A8.0.1 FOR CORRIDORS NOTED TO BE "ONE HOUR RATED CORRIDORS" (SIMILAR CONDITIONS AS REQUIRED).
5. ALL DOOR JAMBS AT HINGE SIDE TO BE 6" AT ALL PERPENDICULAR DRYWALL PARTITION LOCATIONS UNLESS OTHERWISE NOTED.
6. PROVIDE METAL BACKING AS REQUIRED AT INTERIOR PARTITION FOR ALL COUNTERTOPS, CHAIR RAILS AND WALL MOUNTED ACCESSORIES; REFER TO DETAIL 12/A8.0.4.
7. ALL DIMENSIONS ARE FINISH FACE UNLESS NOTED OTHERWISE.
8. ALL FIRE EXTINGUISHER QUANTITIES/LOCATIONS MUST BE APPROVED BY FIRE MARSHALL PRIOR TO INSTALLATION. REFER TO DETAIL 1/A8.0.2.
9. ALL DIMENSIONS ARE MINIMUM DIMENSIONS. NOTIFY ARCHITECT OF ANY DIMENSIONAL BUSTS.
10. PATCH AND REPAIR ALL EXSITNG GYPSUM BOARD SURFACES. SAND AND SMOTH FOR NEW PAINT FINISH AS NOTED ON FINISH PLANS. FINISH WALLS FOR LEVEL R FINISH.
11. REFER TO MOUNTING HEIGHT SCHEDULE ON SHEET A0.4 FOR DEVICE AND ACCESSORY HEIGHT LOCATIONS.

KEY PLAN

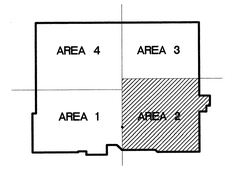

FLOOR PLAN AREA 2 — 1/8"=1'-0" — 1

CARRIER JOHNSON
ARCHITECTURE
INTERIOR DESIGN
PLANNING

GORDON R. CARRIER AIA
MICHAEL C. JOHNSON AIA

WILLIAM C. BOCKEN AIA
DEBORAH F. ELLIOTT IIDA

2600 MICHELSON DRIVE
SUITE 400
IRVINE, CALIFORNIA
92612

TEL 949 955-2353
FAX 949 955-2377

1301 THIRD AVENUE
SAN DIEGO, CALIFORNIA
92101

TEL 619 239-2353
FAX 619 239-6227

RECORD DOCUMENTS

THESE DOCUMENTS RELEASED BY CARRIER JOHNSON FOR USE AS RECORD DOCUMENTS REFLECTING AS-BUILT LOCATION OF THE WORK AND SIGNIFICANT CHANGES MADE DURING THE CONSTRUCTION PROCESS, AND ARE BASED ON INFORMATION FURNISHED TO CARRIER JOHNSON BY CONTRACTOR AND OTHER PARTIES WHICH WILL BE ASSUMED RELIABLE. CARRIER JOHNSON CANNOT AND DOES NOT WARRANT THE ACCURACY OF THIS INFORMATION AND SHALL NOT BE RESPONSIBLE FOR ANY ERRORS OR OMISSIONS WHICH MAY BE INCORPORATED THEREIN AS A RESULT OF INACCURATE OR INCOMPLETE INFORMATION FURNISHED. FIELD CONFIRMATION OF EXISTING CONDITIONS.

ONTARIO PD:: HEADQUARTERS

2534 S. ARCHIBALD AVE., ONTARIO, CALIFORNIA 91761

Field Order #13 07.01.03
5 Addendum 5 04.21.2003
3 Addendum 3
2 Addendum 2/Bldg. Dept. Re-Submittal 03.20.2003
Building Dept. Submittal 02.24.2003

ISSUES:
DIRECTORY/FILE NUMBER: 4511–A212
XREF'S DRAWINGS:
PROJECT NUMBER: 4511.00
DRAWN BY: CHECKED BY:
DATE: 2/24/03
SCALE: 1/8" = 1'-0"
TITLE: FLOOR PLAN FIRST LEVEL AREA 2

DRAWING NO: A2.1.2

5

ALL IDEAS, DESIGNS, ARRANGEMENTS, OR PLANS SHALL BE USED BY, OR DISCLOSED TO ANY PERSON, FIRM, OR CORPORATION FOR ANY PURPOSE WHATSOEVER WITHOUT THE WRITTEN PERMISSION OF CARRIER JOHNSON. NO COPYING, REPRODUCTION OR USE THEREOF IS PERMISSIBLE WITHOUT THE CONSENT OF CARRIER JOHNSON.

FINISH PLAN LEGEND

SYMBOL	DESCRIPTION
	FLOORING TRANSITIONS; REFER TO SHEET A8.0.5 FOR DETAILS
#	REFER TO SHEET A-2.3.0 FOR FINISH LEGEND DESIGNATION
#	REFER TO SHEET A-2.3.0 FOR FINISH LEGEND DESIGNATION
#	REFER TO FINISH KEYNOTES
CG	CORNER GUARDS
	CRASH RAIL, REFER TO DETAIL 7/A8.0.5

PLAN KEY NOTES

1. ONTARIO PD BADGE LOGO TO BE WATER-JET CUT AS PER DETAIL DRAWINGS USING SPECIFIED SIZE, COLOR AND MATERIAL AS NOTED ON FINISH SCHEDULE. WATER-JET CUTTING TO BE PROVIDED BY SPEC CERAMICS, INC., 1021 LACY ST., ANAHEIM, CA 92805, CONTACT: GAIL KELLY, (949) 808-0134.
2. WALLS IN I.D. WORKROOM TO BE P-1, EPOXY.
3. VISUALLY IMPAIRED STRIPS SHALL BE INSTALLED ON THE UPPER APPROACH AND THE LOWER TREAD, A MINIMUM OF 2" IN WIDTH A MAXIMUM OF 1" FROM THE TREAD NOSE OR LANDING.
4. EXISTING WALL TILE SURFACES AND GROUT JOINTS TO BE RESURFACED. CLEAN AND PREPP FOR NEW EPOXY FINISH COATING.

GENERAL NOTES

1. WHERE VCT 1 – 5 ARE SPECIFIED COLLECTIVELY INSTALL PATTERN RANDOM ,QUARTER-TURNED, WITH THE FOLLOWING QUANTITIES:

VCT-1	45%
VCT-2	20%
VCT-3	9%
VCT-4	9%
VCT-5	7%

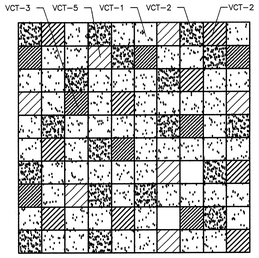

2. REFER TO STONE BASE DETAILS 5 & 7/A8.0.4 WHEN STONE BASE IS SPECIFIED.

FINISH PLAN AREA 2
1/8"=1'-0"
1

ARCHITECTURE
INTERIOR DESIGN
PLANNING

CARRIER JOHNSON

GORDON R. CARRIER AIA
MICHAEL C. JOHNSON AIA

WILLIAM C. BOCKEN AIA
DEBORAH P. ELLIOTT IIDA

2600 MICHELSON DRIVE
SUITE 400
IRVINE, CALIFORNIA
92612

TEL 949 955-2353
FAX 949 955-2377

1301 THIRD AVENUE
SAN DIEGO, CALIFORNIA
92101

TEL 619 239-2353
FAX 619 239-6227

RECORD DOCUMENTS
THESE DOCUMENTS PREPARED BY CARRIER JOHNSON FOR USE AS RECORD DOCUMENTS WILL SHOW THE REPORTED LOCATION OF THE WORK AND SIGNIFICANT CHANGES MADE DURING THE CONSTRUCTION PROCESS AND ARE BASED ON MARK-UPS AND OTHER DATA FURNISHED BY THE CONTRACTOR AND OTHER PARTIES WHICH WILL BE ASSUMED RELIABLE. CARRIER JOHNSON CANNOT AND DOES NOT WARRANT THE ACCURACY OF THIS INFORMATION BEYOND THE CARE AND SKILL NORMALLY EXERCISED BY ARCHITECTS PERFORMING SIMILAR SERVICES AND SHALL NOT BE RESPONSIBLE FOR ANY ERRORS OR OMISSIONS WHICH MAY BE INCORPORATED THEREIN AS A RESULT OF INACCURATE OR INCOMPLETE INFORMATION FURNISHED. FIELD CONFIRMATION OF EXISTING CONDITIONS.

ONTARIO PD:: HEADQUARTERS

2534 S. ARCHIBALD AVE., ONTARIO, CALIFORNIA 91761

FO3 Field Order #13 07.01.03
5 Addendum 5 04.21.2003
3 Addendum 3
2 Addendum 2/Bldg. Dept. Re-Submittal 03.20.2003
Building Dept. Submittal 02.24.2003

ISSUES:
DIRECTORY/FILE NUMBER: 4511-A212FP
XREF'S DRAWINGS:
PROJECT NUMBER: 4511.00
DRAWN BY: CHECKED BY:
DATE: 2/24/03
SCALE: 1/8" = 1'-0"
TITLE: FINISH PLAN FIRST LEVEL AREA 2

KEY PLAN

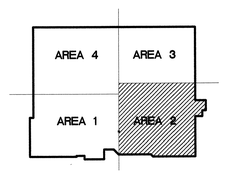

DRAWING NO:
A2.1.2FP

ALL IDEAS, DESIGN, ARRANGEMENTS AND PLANS INDICATED OR REPRESENTED BY THIS DRAWING ARE OWNED BY AND THE PROPERTY OF CARRIER JOHNSON AND WERE CREATED, EVOLVED AND DEVELOPED FOR USE ON, AND IN CONNECTION WITH THIS PROJECT. NONE OF SUCH IDEAS, DESIGN, ARRANGEMENTS OR PLANS SHALL BE USED BY OR DISCLOSED TO ANY PERSON, FIRM OR CORPORATION FOR ANY PURPOSE WHATSOEVER WITHOUT THE PRIOR WRITTEN CONSENT OF CARRIER JOHNSON. THESE DRAWINGS AND SPECIFICATIONS ARE AN UNPUBLISHED WORK PROTECTED BY COPYRIGHT LAWS. IN THE EVENT OF UNAUTHORIZED REPRODUCTION OR PUBLICATION, THE COPYRIGHT HOLDER SHALL BE ENTITLED TO DAMAGES FOR EACH INFRINGEMENT. FILING OF THESE DRAWINGS AND SPECIFICATIONS WITH ANY PUBLIC AGENCY IS NOT A PUBLICATION OF SAME. NO COPYING, REPRODUCTION OR USE THEREOF IS PERMISSIBLE WITHOUT THE CONSENT OF CARRIER JOHNSON.

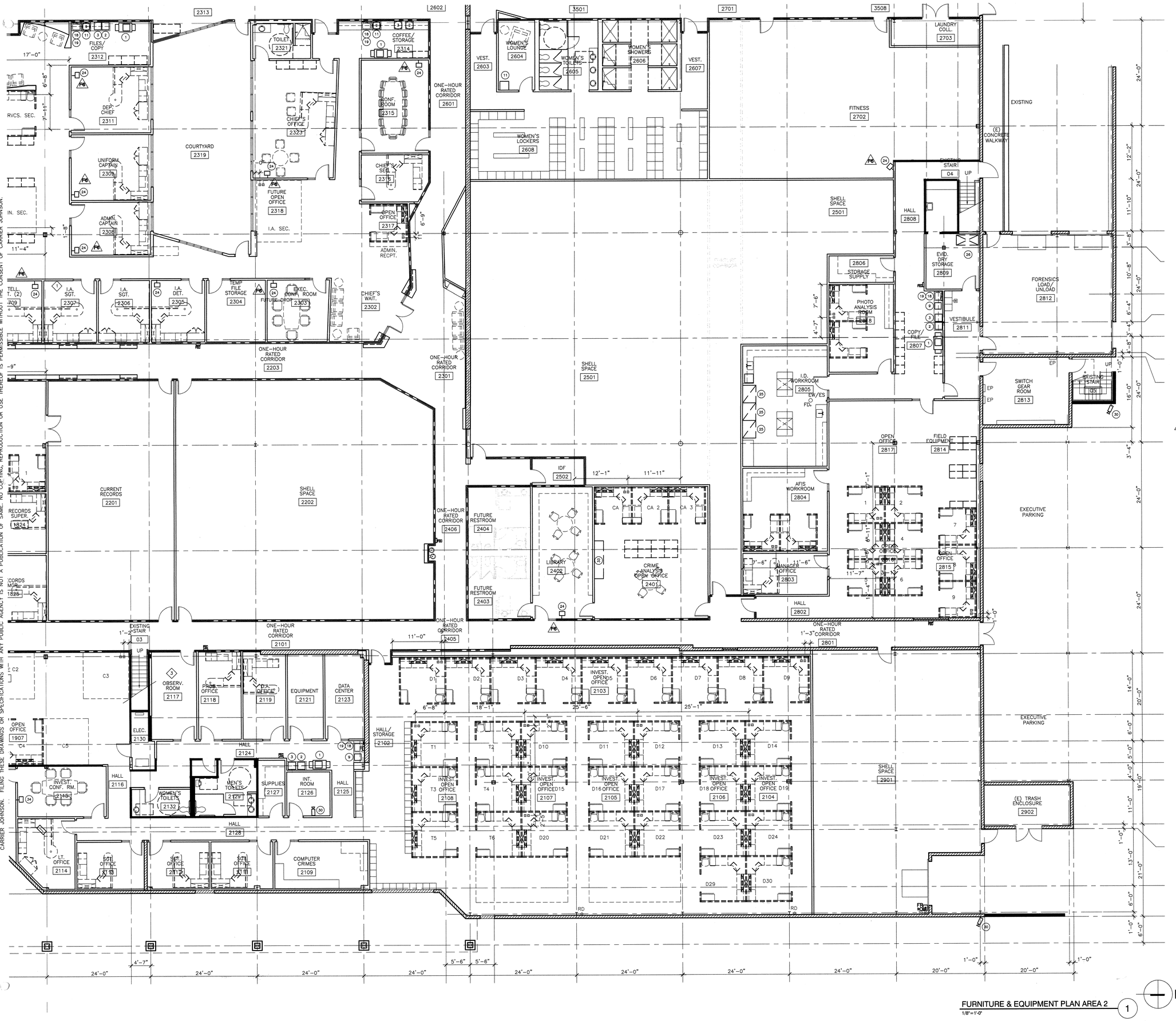

EQUIPMENT SCHEDULE

NO.	NAME	MANUF.	MODEL NO.	SIZE	PROV. BY	INSTAL. BY
1	COPIER	–	–	–	TENT.	TENT.
2	LASER PRINTER	–	–	–	TENT.	TENT.
3	FAX MACHINE	–	–	–	TENT.	TENT.
4	PLOTTER	–	–	–	TENT.	TENT.
5	SCANNER	–	–	–	TENT.	TENT.
6	SHREDDER	–	–	–	TENT.	TENT.
7	TYPEWRITER	–	–	–	TENT.	TENT.
8	MICROWAVE	–	JEM25GY* BLACK	–	TENT.	TENT.
9	COFFEE MACHINE	–	–	–	TENT.	TENT.
10	REF./FREEZER	–	–	–	TENT.	TENT.
11	UNDER-COUNTER REFRIGERATOR	ULINE	29R–BLACK (HT. CANNOT EXCEED 32"AFF OVERALL)		TENT.	TENT.
12	REFRIGERATOR	–	–	–	TENT.	TENT.
13	FREEZER	–	–	–	TENT.	TENT.
14	UNDER-COUNTER DISHWASHER	ASKO	D1876 BLACK ADA	24"X24"X 32-1/4"	CNTR.	CNTR.
15	GARBAGE DISPOSAL	SE IN-SINKRTR.	PRO 77 /APPR. EQUAL		CNTR.	CNTR.
16	VENDING MACHINE	–	–	–	TENT.	TENT.
17	VENDING MACH. W/FLOOR DRAIN	–	–	–	TENT.	TENT.
18	SOAP DISPENSER	BOBRICK	B4112 SURFACE	SATIN SS FINISH	CNTR.	CNTR.
19	PAPER TOWEL DISPENSER	BOBRICK	B4262 SURFACE	SATIN SS FINISH	CNTR.	CNTR.
20	MANUAL PROJECTION SCREEN	–	–	–	TENT.	TENT.
21	ELECTRICAL PROJECTION SCREEN	–	–	–	TENT.	TENT.
22	SECURITY EQUIPMENT	–	–	–	TENT.	TENT.
23	T.V./CABLE	PROVIDE OUTLET; STD. HEIGHT	CABLE AND POWER		TENT.	TENT.
24	WALL MOUNTED T.V./ CABLE	+96 AFF; PROVIDE OUTLET	BRACKET BY G.C. CABLE AND POWER		TENT.	G.C.
25	FUME HOOD	–	–	–	TENT.	TENT.
26	DRYING MACHINE	–	–	–	TENT.	TENT.
27	HIGH DENSITY MANUAL FILE	SPACE-SAVER	–	–	CNTR.	CNTR.
28	WEAPON LOCKER	SIRCHIE GROUP	426-4G; #SSB		CNTR.	CNTR.
29	CEILING MOUNTED TV	–	–	–	TENT.	TENT.
30	SECURITY CAMERA	–	–	–	TENT.	TENT.
30A	AUDIBLE SECURITY CAM	–	–	–	TENT.	TENT.
31	EMERGENCY CALL BOX	–	–	–	CNTR.	CNTR.
32	PAY PHONE	–	–	–	CNTR.	CNTR.
33	PLOTTER	–	–	–	TENT.	TENT.
34	TV/VCR	STANDARD	HEIGHT; NO CABLE		TENT.	TENT.

PLAN KEY NOTES

1. MONITOR FOR CAMERA LOCATED IN ROOM #1711 IS LOCATED IN THIS ROOM.
2. MONITORS FOR ALL HOLDING CELL CAMERA'S IS LOCATED IN THIS ROOM; WALL MOUNTED.
3. MONITORS FOR CAMERA'S LOCATED IN ROOMS 1109, 1111, 1108, 2126, 1904, 1913 AND 1912 ARE LOCATED IN THIS ROOM; WALL MOUNTED.
4. MONITORS FOR CAMERA'S LOCATED IN ROOMS 1813 AND 1814 ARE LOCATED IN THIS ROOM; WALL MOUNTED.
5. MONITORS FOR CAMERA'S LOCATED IN ROOMS 4302, 4334, 4202 AND 4203 ARE LOCATED IN THIS ROOM; WALL MOUNTED.
6. T.V. /CABLES

GENERAL NOTES

1. CONTRACTOR TO PROVIDE CONDUIT, RING & PULL-STRING FOR ALL TEL./DATA RECEPTACLES.
2. ALL NEW RECEPTACLE COVER PLATES TO BE WHITE.
3. CONTRACTOR SHALL REPAIR ANY DAMAGED CONSTRUCTION ADJACENT TO ALL ELECTRICAL WORK.
4. ALL OUTLETS & RECEPTACLES INSTALLED ABOVE COUNTERTOPS TO BE MOUNTED VERTICALLY, U.N.O.
5. ELECTRICAL CONTRACTOR TO COORDINATE ELECTRICAL INSTALLATION W/ OTHER SUBCONTRACTORS & SHALL BEAR ANY COST ASSOCIATED W/ THE RELOCATION OF ANY EQUIPMENT INSTALLED WHICH CONFLICTS W/ OTHER EQUIPMENT.
6. ALL OUTLETS & TEL./DATA LINES TO BE GROUPED TOGETHER W/ A MAXIMUM SEPARATION OF 6"–8" O.C., U.N.O.
7. PROVIDE POWER TO SYSTEMS FURNITURE FOR TEL./DATA HOOKUP. SYSTEMS FURNITURE MANUFACTURER TO SUPPLY POWER FEEDS TO CONNECT POWER & SYSTEMS FURN. REFER TO PLAN FOR APPROX. LOCATIONS. PROVIDE SUFFICIENT CIRCUIT'S / AMPS TO POWER GROUPS OF WORKSTATIONS. COORDINATE W/ SYSTEMS FURNITURE MANUF. / INSTALLER. ALL AMP BOXES/CORE LOCATIONS SHALL BE MARKED AT THE FLOOR AND FIELD VERIFIED BY THE FURNITURE VENDOR PRIOR TO INSTALLATION.
8. OUTLETS & SWITCHING – TYPICAL DIAGRAM PROVIDED FOR MOUNTING HEIGHTS & LOCATIONS – ALL VARIATIONS TO BE REVIEWED BY CJ & TENANT. G.C. & SUBCONTRACTORS SHALL BEAR ANY COST ASSOCIATED W/ THE RELOCATION OF INCORRECT OUTLET LOCATIONS.
9. GC TO PROVIDE & INSTALL ONE THERMOSTAT FOR EVERY HVAC ZONE. REFER TO MECHANICAL DWG.'S FOR LOCATIONS. GC IS NOT TO INSTALL T–STATS UNTIL LOCATIONS HAVE BEEN REVIEWED BY ARCHITECT IN THE FIELD. REFER TO MOUNTING HEIGHT SCHEDULE PROVIDED ON SHEET A0.4.
10. PROVIDE PAPER TOWEL & SOAP DISPENSER AT ALL SINK LOCATIONS. REFER TO INTERIOR ELEVATIONS. REFER TO SPECIFICATION IN ACCESSORY LEGEND, SHEET A4.1.0, LETTERS W & Z.
11. ALL APPLIANCES TO BE WHITE, U.N.O.
12. CENTER OF ALL SWITCH PLATES, T–STATS, ETC. TO BE CENTER AT 38" A.F.F.
13. CONTRACTOR TO PROVIDE SUPPORT AND BACKING TO ALL TENANT PROVIDED WALL MOUNTED MONITORS AND T.V.'S. REFER TO EQUIPMENT AND ELECTRICAL POWER PLANS FOR LOCATIONS.

5

KEY PLAN

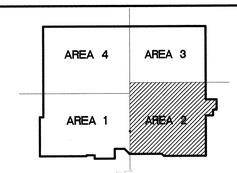

FURNITURE & EQUIPMENT PLAN AREA 2
1/8"=1'-0"

N

ARCHITECTURE
INTERIOR DESIGN
PLANNING

CARRIER JOHNSON

GORDON B. CARRIER AIA
MICHAEL C. JOHNSON AIA

WILLIAM C. BOCKEN AIA
DEBORAH P. ELLIOTT IIDA

2600 MICHELSON DRIVE
SUITE 400
IRVINE, CALIFORNIA
92612

TEL 949 955-2353
FAX 949 955-2377

1301 THIRD AVENUE
SAN DIEGO, CALIFORNIA
92101

TEL 619 239-2353
FAX 619 239-6227

RECORD DOCUMENTS
THESE DOCUMENTS RELEASED BY CARRIER JOHNSON FOR CONSTRUCTION ARE BASED ON THE CONTRACT DOCUMENT LOCATION OF THE WORK AND SIGNIFICANT CHANGES MADE DURING THE CONSTRUCTION PROCESS, AND ARE BASED ON INFORMATION FURNISHED BY THE CONTRACTOR, SUBCONTRACTORS AND OTHER PARTIES WHICH WILL BE ASSUMED RELIABLE. CARRIER JOHNSON CANNOT AND DOES NOT WARRANT THE ACCURACY OF THIS INFORMATION AND SHALL NOT BE RESPONSIBLE FOR ANY ERRORS OR OMISSIONS WHICH MAY BE INCORPORATED THEREIN AS A RESULT. A FIELD VERIFICATION OF EXISTING CONDITIONS MUST INCLUDE FIELD CONFIRMATION OF EXISTING CONDITIONS.

ONTARIO PD:: HEADQUARTERS

2534 S. ARCHIBALD AVE., ONTARIO, CALIFORNIA 91761

Field Order #13 Dated October 6 05.27.2003
5 Addendum 5 04.21.2003
3 Addendum 3
2 Addendum 2/Bldg. Dept. Re-Submittal 03.20.2003
Building Dept. Submittal 02.24.2003

ISSUES:
DIRECTORY/FILE NUMBER: 4511–A212FE

XREF'S DRAWINGS:

PROJECT NUMBER: 4511.00
DRAWN BY: CHECKED BY:
DATE: 2/24/03
SCALE: 1/8" = 1'-0"

TITLE:
FURNITURE AND EQUIPMENT PLAN FIRST LEVEL AREA 2

DRAWING NO:
A2.1.2FE
5

ALL IDEAS, DESIGN ARRANGEMENTS AND PLANS INDICATED OR REPRESENTED BY THIS DRAWING, OR PLANS SHALL BE USED BY, OR DISCLOSED TO ANY PERSON, FIRM, OR CORPORATION FOR ANY PURPOSE WHATSOEVER WITHOUT THE WRITTEN PERMISSION OF CARRIER JOHNSON. NO COPYING, REPRODUCTION OR USE THEREOF IS PERMISSIBLE WITHOUT THE CONSENT OF CARRIER JOHNSON.

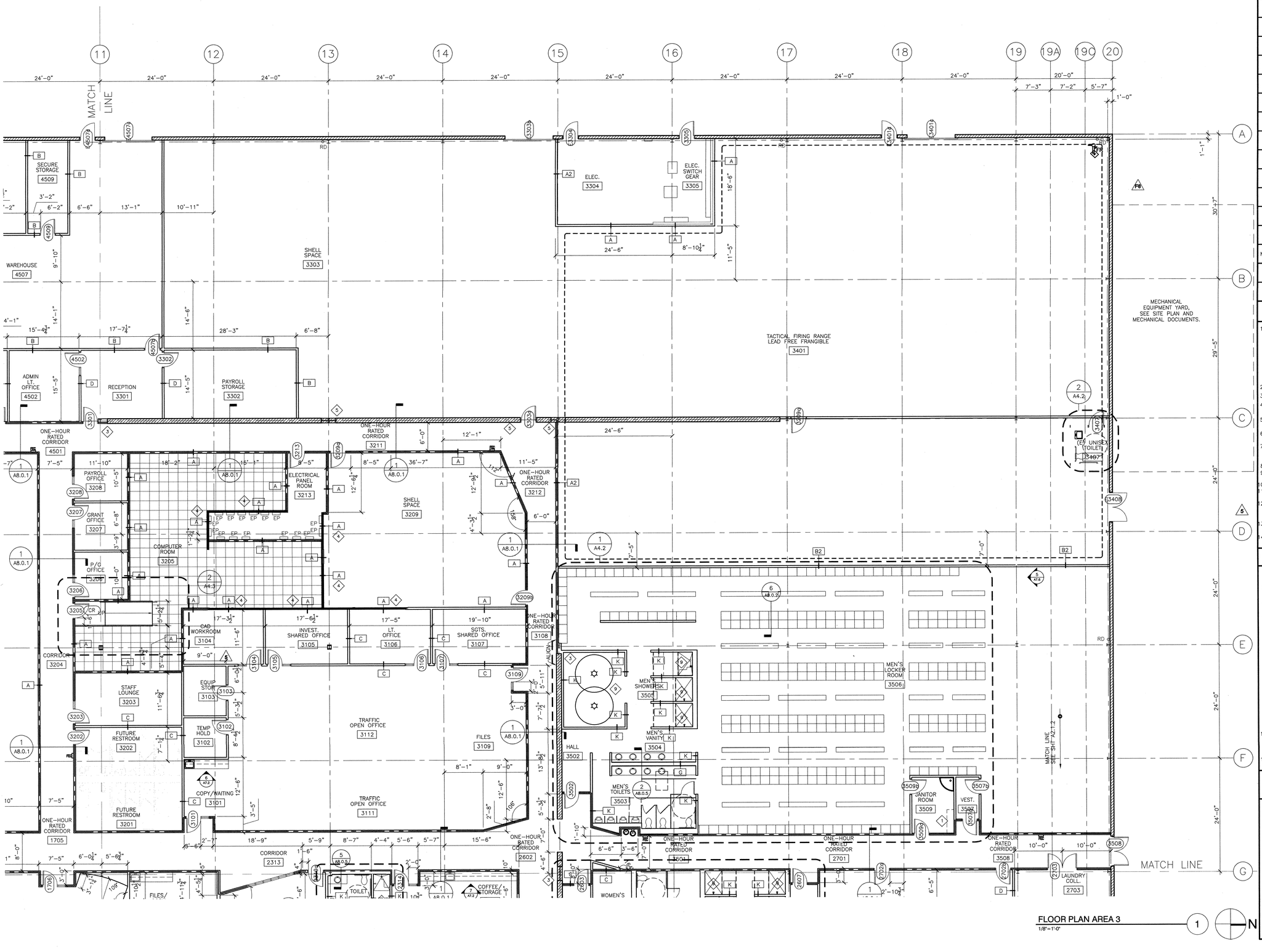

FLOOR PLAN AREA 3
1/8"=1'-0"

PARTITION LEGEND

SYMBOL	DESCRIPTION
A	ONE HOUR FIRE RATED PARTITION; A/A8.0.1
B	NON-RATED FULL HEIGHT PARTITION; B/A8.0.1
B2	NON-RATED FULL HEIGHT PARTITION W/INSULATION; d/A8.0.1
C	NON-RATED PARTITION TO 6" ABOVE FINISHED CEILING W/INSULATION; C/A8.0.1
C2	NON-RATED PARTION TO 6" ABOVE FINISH CEILING W/INSULATION; C/A8.0.1
C3	NON-RATED FULL HEIGHT PARTITION W/INSULATION; B/A8.0.1
D	NON-RATED PARTITION TO 6" ABOVE FINISHED CEILING; C/A8.0.1
D2	NON-RATED FULL HEIGHT PARTITION; B/A8.0.1
D3	NON-RATED PARTITION TO 6" ABOVE FINISHED CEILING; -C/A8.0.1
E	FULL HEIGHT PARTION W/BALISTIC MATERIAL TO 8'-0" A.F.F.; -/A8.0.1
F	2 HOUR RATED PARTITION F/A8.0.1
G	PLUMBING CHASE WALL G/A8.0.1
H	PARTIAL HEIGHT WALL H/A8.0.1
J	WALL FURRING J/A8.0.1
K	NON-RATED PARTITION K/A8.0.1
	EXISTING PARTITION TO REMAIN
	EXISTING BLOCK WALL TO REMAIN
X	WIRE MESH PARTITIONS/DOORS TO 12'-0" A.F.F.

NOTE: PROVIDE 6" STUDS WHERE REQUIRED BY PLUMBING OR EQUIPMENT

XXXX	DOOR NUMBER AND/OR "E" = EXISTING TO REMAIN "CR" = CARD READER
F.E.C.	FIRE EXTINGUISHER CABINETS-REFER TO DETAIL 1/A8.0.2

PLAN KEY NOTES

1. PROVIDE HEAVY DUTY STANDARD & BRACKETS, 6 @ 15" DEEP (UNLESS NOTED OTHERWISE) MELAMINE ADJUSTABLE SHELVES, STOP TRACK 12" FROM FLOOR AND CEILING. PROVIDE METAL BACKING AS REQUIRED.

   PROVIDIE ALTERNATE PRICE FOR METAL SHELVING RACKS; NATIONAL MATERIAL HANDLING PRODUCTS; 1-800-676-5161; 36"X12"X87" #HC-636-12 (OR EQUAL), DEPTH TO VARY BASED ON PLAN DIMENSIONS.
2. COAT ROD AND SHELF; REFER TO DETAIL 20/A8.0.2.
3. CMU TO GYPSUM JOINT, REFER TO DETAIL 4/A8.0.2.
4. VERIFY EXISTING WALL TYPE, MODIFY AS REQUIRED TO MEET WALL TYPE "A" – ONE HOUR RATED WALL.
5. NEW BLOCK WALL INFILL TO MATCH EXISTING COLOR, SIZE AND GROUT JOINTS.
6. LAMINATE ONE LAYER 5/8" TYPE "X" GYPSUM BOARD OVER EXISTING BLOCK WALL.
7. PROVIDE 2-HOUR FIRE PROOFING SPRAY ON ROOF STRUCTURE AND ROOM DECK 5'-0" EACH SIDE OF 2-HOUR WALL.
8. LEVEL 3 BALLISTIC GLAZING.
9. SHOWER FLOORS: REFER TO DETAILS 11, 15 AND 16, SHEET A8.0.5.
10. ACCESS FLOORING DETAILS REFER TO SHEET A8.0.6.
11. ADD 16 GA. SECURITY MESH BETWEEN STUD AND GYPSUM BOARD.
12. PROVIDE WRAPPED OPENING IN THE CENTER OF THE OFFICE ELEVATION IN WIDTH. OPENING TO BE 18" X 18" WITH LEDGE AT 42" A.F.F.
13. EACH "DESK" AREA TO HAVE BUTTON "BUZZ" TO PROVIDE ACCESS THROUGH DOOR #1106
14. PROVIDE 36"W60"H 20 MIN. RATE FIRE ROLLING DOOR; SILL AT 34" AFF; CONNECT TO FIRE ALARM SYSTEM

PLAN GENERAL NOTES

1. ALL WALLS TO BE WALL TYPE "D" CONSTRUCTION UNLESS NOTED OTHERWISE.
2. WHERE NEW BLOCK WALLS ARE REQUIRED; MATCH EXISTING AND ALIGN FINISH FACE.
3. CLEAN EXISTING BLOCK WALLS NOTED TO REMAIN AND PREP FOR PAINT, HIGH GLOSS FINISH.
4. RE: DETAIL 1/A8.0.1 FOR CORRIDORS NOTED TO BE "ONE HOUR RATED CORRIDORS" (SIMILAR CONDITIONS AS REQUIRED).
5. ALL DOOR JAMBS AT HINGE SIDE TO BE 6" AT ALL PERPENDICULAR DRYWALL PARTITION LOCATIONS UNLESS OTHERWISE NOTED.
6. PROVIDE METAL BACKING AS REQUIRED AT INTERIOR PARTITION FOR ALL COUNTERTOPS, CHAIR RAILS AND WALL MOUNTED ACCESSORIES; REFER TO DETAIL 12/A8.0.4.
7. ALL DIMENSIONS ARE FINISH FACE UNLESS NOTED OTHERWISE.
8. ALL FIRE EXTINGUISHER QUANTITIES/LOCATIONS MUST BE APPROVED BY FIRE MARSHALL PRIOR TO INSTALLATION. REFER TO DETAIL 1/A8.0.2.
9. ALL DIMENSIONS ARE MINIMUM DIMENSIONS. NOTIFY ARCHITECT OF ANY DIMENSIONAL BUSTS.
10. PATCH AND REPAIR ALL EXSITING GYPSUM BOARD SURFACES. SAND AND SMOTH FOR NEW PAINT FINISH AS NOTED ON FINISH PLANS. FINISH WALLS FOR LEVEL R FINISH.
11. REFER TO MOUNTING HEIGHT SCHEDULE ON SHEET A0.4 FOR DEVICE AND ACCESSORY HEIGHT LOCATIONS.

KEY PLAN

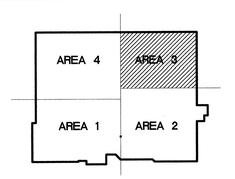

CARRIER JOHNSON
ARCHITECTURE
INTERIOR DESIGN
PLANNING
GORDON R. CARRIER AIA
MICHAEL C. JOHNSON AIA
WILLIAM C. BOCKEN AIA
DEBORAH P. ELLIOTT IIDA
2600 MICHELSON DRIVE
SUITE 400
IRVINE, CALIFORNIA
92612
TEL 949 955-2353
FAX 949 955-2377
1301 THIRD AVENUE
SAN DIEGO, CALIFORNIA
92101
TEL 619 239-2353
FAX 619 239-6227

RECORD DOCUMENTS
USE AS RECORD DRAWINGS. CARRIER JOHNSON FOR USE AS RECORD DRAWINGS WILL SHOW THE REPORTED LOCATION OF THE WORK AND SIGNIFICANT CHANGES MADE DURING THE CONSTRUCTION PROCESS, AND ARE BASED ON LIMITED INFORMATION FURNISHED BY THE CONTRACTOR AND OTHER PARTIES WHICH WILL BE ASSUMED RELIABLE. CARRIER JOHNSON CANNOT AND DOES NOT WARRANT THE ACCURACY OR COMPLETENESS OF THIS INFORMATION AND SHALL NOT BE RESPONSIBLE FOR ANY ERRORS OR OMISSIONS WHICH MAY BE INCORPORATED THEREIN AS A RESULT OF SUCH INFORMATION. ALL MUST INCLUDE FIELD CONFIRMATION OF EXISTING CONDITIONS.

ONTARIO PD:: HEADQUARTERS

2534 S. ARCHIBALD AVE., ONTARIO, CALIFORNIA 91761

Field Order #13 FO 07.01.03
5 Addendum 5 04.21.2003
3 Addendum 3
2 Addendum 2/Bldg. Dept. Re-Submittal 03.20.2003
Building Dept. Submittal 02.24.2003

ISSUES:
DIRECTORY/FILE NUMBER: 4511-A213
XREF'S DRAWINGS:
PROJECT NUMBER: 4511.00
DRAWN BY: CHECKED BY:
DATE: 2/24/03
SCALE: 1/8" = 1'-0"
TITLE: FLOOR PLAN FIRST LEVEL AREA 3

DRAWING NO: A2.1.3

5

ALL IDEAS, DESIGN, ARRANGEMENTS AND PLANS INDICATED OR REPRESENTED BY THIS DRAWING ARE OWNED BY AND ARE THE PROPERTY OF CARRIER JOHNSON AND WERE CREATED, EVOLVED AND DEVELOPED FOR USE ON, AND PUBLICATION OF, THIS PROJECT. ALL TITLE RIGHTS IN THE DRAWING, AS AN "ARCHITECTURAL WORK" AS DEFINED BY THE U.S. COPYRIGHT ACT, ARE HEREBY EXPRESSLY RESERVED BY CARRIER JOHNSON. NO RIGHT OR LICENSE TO USE, COPY OR DISCLOSE THE DRAWING OR ANY PORTION THEREOF IN ANY MANNER WHATSOEVER IS GRANTED OR IMPLIED BY CARRIER JOHNSON. FILING THESE DRAWINGS OR SPECIFICATIONS WITH ANY PUBLIC AGENCY IS NOT A PUBLICATION OF SAME. NO COPYING, REPRODUCTION OR USE THEREOF IS PERMISSIBLE WITHOUT THE CONSENT OF CARRIER JOHNSON.

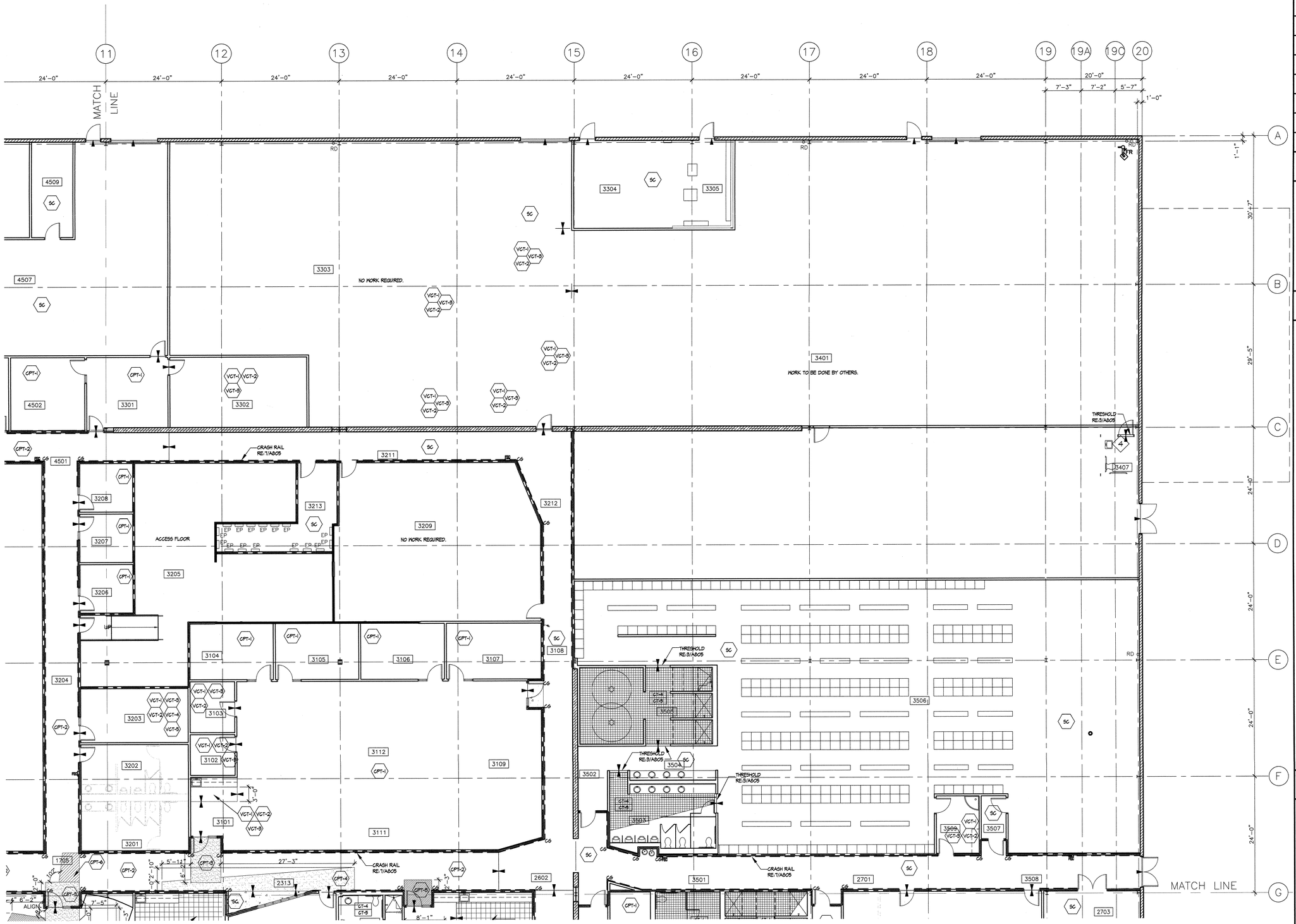

FINISH PLAN AREA 3
1/8"=1'-0"

FINISH PLAN LEGEND

SYMBOL	DESCRIPTION
	FLOORING TRANSITIONS; REFER TO SHEET A8.0.5 FOR DETAILS
#	REFER TO SHEET A-2.3.0 FOR FINISH LEGEND DESIGNATION
#	REFER TO SHEET A-2.3.0 FOR FINISH LEGEND DESIGNATION
#	REFER TO FINISH KEYNOTES
CG	CORNER GUARDS
	CRASH RAIL, REFER TO DETAIL 7/A8.0.5

PLAN KEY NOTES

1. ONTARIO PD BADGE LOGO TO BE WATER-JET CUT AS PER DETAIL DRAWINGS USING SPECIFIED SIZE, COLOR AND MATERIAL AS NOTED ON FINISH SCHEDULE. WATER-JET CUTTING TO BE PROVIDED BY SPEC CERAMICS, INC., 1021 LACY ST., ANAHEIM, CA 92805, CONTACT: GAIL KELLY, (949) 808-0134.
2. WALLS IN I.D. WORKROOM TO BE P-1, EPOXY.
3. VISUALLY IMPAIRED STRIPS SHALL BE INSTALLED ON THE UPPER APPROACH AND THE LOWER TREAD, A MINIMUM OF 2" IN WIDTH A MAXIMUM OF 1" FROM THE TREAD NOSE OR LANDING.
4. EXISTING WALL TILE SURFACES AND GROUT JOINTS TO BE RESURFACED, CLEAN AND PREPP FOR NEW EPOXY FINISH COATING.

GENERAL NOTES

1. WHERE VCT 1 – 5 ARE SPECIFIED COLLECTIVELY INSTALL PATTERN RANDOM ,QUARTER-TURNED, WITH THE FOLLOWING QUANTITIES:

   VCT-1 45%
   VCT-2 20%
   VCT-3 9%
   VCT-4 9%
   VCT-5 7%

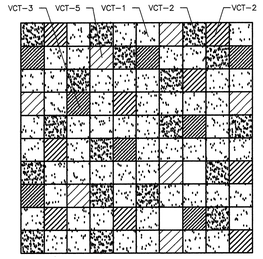

2. REFER TO STONE BASE DETAILS 5 & 7/A8.0.4 WHEN STONE BASE IS SPECIFIED.

KEY PLAN

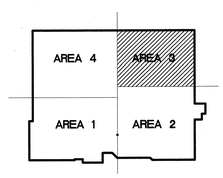

CARRIER JOHNSON
ARCHITECTURE
INTERIOR DESIGN
PLANNING
GORDON R. CARRIER AIA
MICHAEL C. JOHNSON AIA
WILLIAM C. BOCCEN AIA
DEBORAH P. ELLIOTT IIDA
2600 MICHELSON DRIVE
SUITE 400
IRVINE, CALIFORNIA
92612
TEL 949 955-2353
FAX 949 955-2377
1301 THIRD AVENUE
SAN DIEGO, CALIFORNIA
92101
TEL 619 239-2353
FAX 619 239-6227

RECORD DOCUMENTS

THESE DOCUMENTS RELEASED BY CARRIER JOHNSON FOR CONSTRUCTION ARE BASED ON THE BEST KNOWN EXISTING CONDITIONS AT THE LOCATION OF THE WORK AND SIGNIFICANT CHANGES MADE DURING THE CONSTRUCTION PROCESS, AND ARE BASED ON UNVERIFIED INFORMATION PROVIDED BY THE CONTRACTOR AND OTHERS. CONTRACTOR SHALL VERIFY ALL DIMENSIONS AND EXISTING CONDITIONS AND SHALL REPORT ANY DISCREPANCIES TO CARRIER JOHNSON CANNOT AND DOES NOT WARRANT THE ACCURACY AND/OR COMPLETENESS OF THE INFORMATION AND CONDITIONS SHOWN ON THESE DRAWINGS AND ASSUMES NO RESPONSIBILITY FOR ANY OMISSIONS, INCONSISTENCIES OR DIMENSIONS WHICH MAY BE INCORPORATED THEREIN AS A RESULT. FUTURE CONSTRUCTION PLANNING MUST INCLUDE FIELD CONFIRMATION OF EXISTING CONDITIONS.

ONTARIO PD:: HEADQUARTERS

2534 S. ARCHIBALD AVE., ONTARIO, CALIFORNIA 91761

Field Order #13 07.01.03
5 Addendum 5 04.21.2003
3 Addendum 3
2 Addendum 2/Bldg. Dept. Re-Submittal 03.20.2003
Building Dept. Submittal 02.24.2003
ISSUES:
DIRECTORY/FILE NUMBER: 4511-A213FP
XREF'S DRAWINGS:
PROJECT NUMBER: 4511.00
DRAWN BY: CHECKED BY:
DATE: 2/24/03
SCALE: 1/8" = 1'-0"
TITLE: FINISH PLAN FIRST LEVEL AREA 3
DRAWING NO: A2.1.3FP

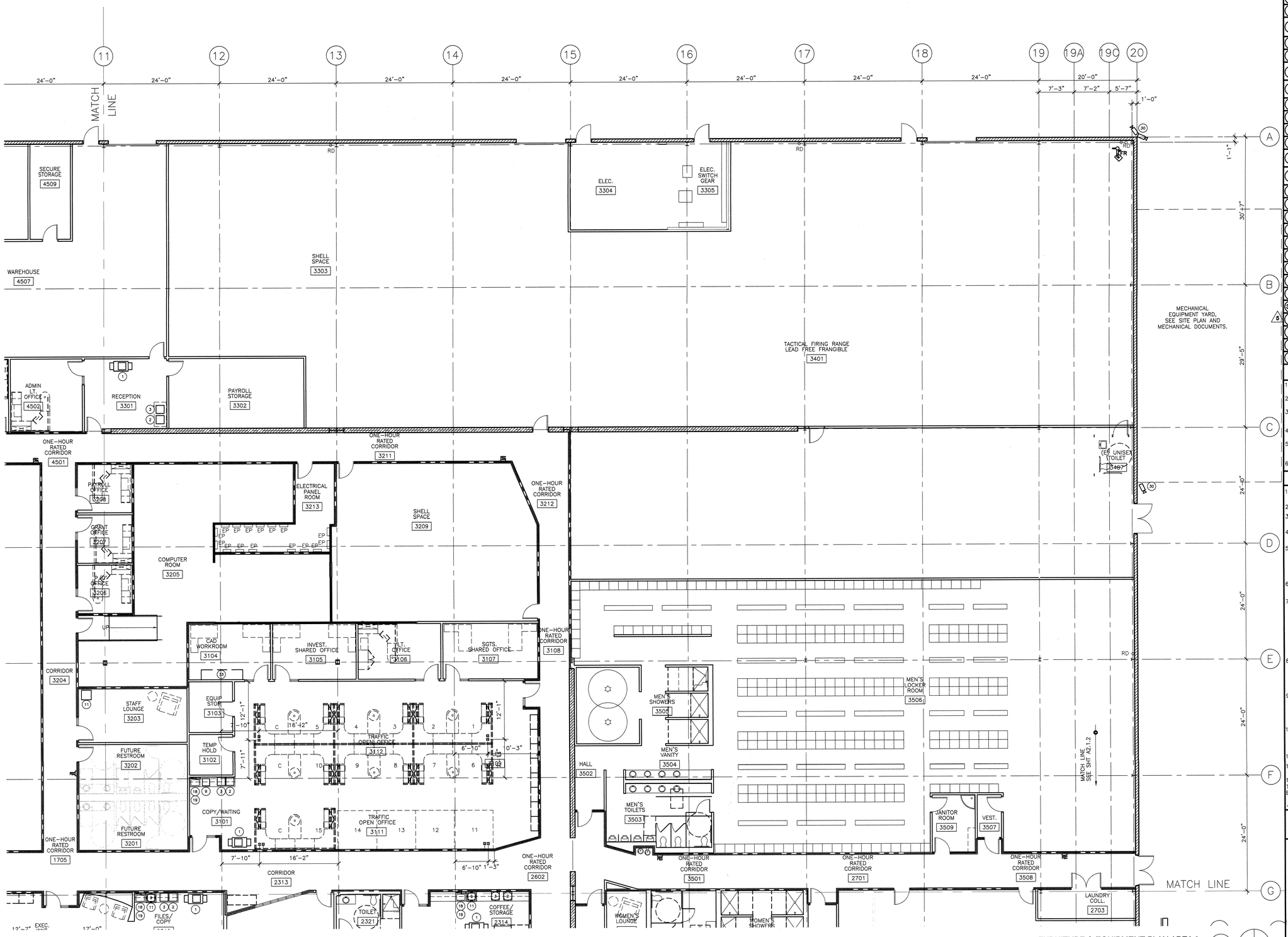

FURNITURE & EQUIPMENT PLAN AREA 3

1/8" = 1'-0"

EQUIPMENT SCHEDULE

NO.	NAME	MANUF.	MODEL NO.	SIZE	PROV. BY.	INSTAL. BY.
1	COPIER	–	–	–	TENT.	TENT.
2	LASER PRINTER	–	–	–	TENT.	TENT.
3	FAX MACHINE	–	–	–	TENT.	TENT.
4	PLOTTER	–	–	–	TENT.	TENT.
5	SCANNER	–	–	–	TENT.	TENT.
6	SHREDDER	–	–	–	TENT.	TENT.
7	TYPEWRITER	–	–	–	TENT.	TENT.
8	MICROWAVE	–	JEM250Y* BLACK	–	TENT.	TENT.
9	COFFEE MACHINE	–	–	–	TENT.	TENT.
10	REF./FREEZER	–	–	–	TENT.	TENT.
11	UNDER-COUNTER REFRIGERATOR	ULINE	298–BLACK (HT. CANNOT EXCEED 32" AFF OVERALL)		TENT.	TENT.
12	REFRIGERATOR	–	–	–	TENT.	TENT.
13	FREEZER	–	–	–	TENT.	TENT.
14	UNDER-COUNTER DISHWASHER	ASKO	D1876 BLACK ADA	24"X24"X 32–1/4"	CNTR.	CNTR.
15	GARBAGE DISPOSAL	ISE IN-SINKRTR.	PRO 77 /APPR. EQUAL		CNTR.	CNTR.
16	VENDING MACHINE	–	–	–	TENT.	TENT.
17	VENDING MACH. W/FLOOR DRAIN	–	–	–	TENT.	TENT.
18	SOAP DISPENSER	BOBRICK	B4112 SURFACE	SATIN SS FINISH	CNTR.	CNTR.
19	PAPER TOWEL DISPENSER	BOBRICK	B4262 SURFACE	SATIN SS FINISH	CNTR.	CNTR.
20	MANUAL PROJECTION SCREEN	–	–	–	TENT.	TENT.
21	ELECTRICAL PROJECTION SCREEN	–	–	–	TENT.	TENT.
22	SECURITY EQUIPMENT	–	–	–	TENT.	TENT.
23	T.V./CABLE	PROVIDE CABLE AND OUTLET; STD. HEIGHT		POWER	TENT.	TENT.
24	WALL MOUNTED T.V./ CABLE	+96 AFF; PROVIDE CABLE AND OUTLET	BRACKET BY C.C.	POWER	TENT.	G.C.
25	FUME HOOD	–	–	–	TENT.	TENT.
26	DRYING MACHINE	–	–	–	TENT.	TENT.
27	HIGH DENSITY MANUAL FILE	SPACE-SAVER	–	–	CNTR.	CNTR.
28	WEAPON LOCKER	SIRCHIE GROUP	426-40; #SS8		CNTR.	CNTR.
29	CEILING MOUNTED TV	–	–	–	TENT.	TENT.
30	SECURITY CAMERA	–	–	–	TENT.	TENT.
30A	AUDIBLE SECURITY CAM	–	–	–	TENT.	TENT.
31	EMERGENCY CALL BOX	–	–	–	CNTR.	CNTR.
32	PAY PHONE	–	–	–	CNTR.	CNTR.
33	PLOTTER	–	–	–	TENT.	TENT.
34	TV/VCR	STANDARD	HEIGHT; NO CABLE		TENT.	TENT.

PLAN KEY NOTES

1. MONITOR FOR CAMERA LOCATED IN ROOM #1711 IS LOCATED IN THIS ROOM.
2. MONITORS FOR ALL HOLDING CELL CAMERA'S IS LOCATED IN THIS ROOM; WALL MOUNTED.
3. MONITORS FOR CAMERA'S LOCATED IN ROOMS 1109, 1111, 1108, 2126, 1904, 1913 AND 1912 ARE LOCATED IN THIS ROOM; WALL MOUNTED.
4. MONITORS FOR CAMERA'S LOCATED IN ROOMS 1813 AND 1814 ARE LOCATED IN THIS ROOM; WALL MOUNTED.
5. MONITORS FOR CAMERA'S LOCATED IN ROOMS 4302, 4334, 4202 AND 4203 ARE LOCATED IN THIS ROOM; WALL MOUNTED.
6. T.V. /CABLES

GENERAL NOTES

1. CONTRACTOR TO PROVIDE CONDUIT, RING & PULL-STRING FOR ALL TEL./DATA RECEPTACLES.
2. ALL NEW RECEPTACLE COVER PLATES TO BE WHITE.
3. CONTRACTOR SHALL REPAIR ANY DAMAGED CONSTRUCTION ADJACENT TO ALL ELECTRICAL WORK.
4. ALL OUTLETS & RECEPTACLES INSTALLED ABOVE COUNTERTOPS TO BE MOUNTED VERTICALLY, U.N.O.
5. ELECTRICAL CONTRACTOR TO COORDINATE ELECTRICAL INSTALLATION W/ OTHER SUBCONTRACTORS & SHALL BEAR ANY COST ASSOCIATED W/ THE RELOCATION OF ANY EQUIPMENT INSTALLED WHICH CONFLICTS W/ OTHER EQUIPMENT.
6. ALL OUTLETS & TEL./DATA LINES TO BE GROUPED TOGETHER W/ A MAXIMUM SEPARATION OF 6"–8" O.C., U.N.O.
7. PROVIDE POWER TO SYSTEMS FURNITURE FOR TEL./DATA HOOKUP. SYSTEMS FURNITURE MANUFACTURER TO SUPPLY POWER FEEDS TO CONNECT POWER & SYSTEMS FURN. REFER TO PLAN FOR APPROX. LOCATIONS. PROVIDE SUFFICIENT CIRCUIT'S / AMPS TO POWER GROUPS OF WORKSTATIONS. COORDINATE W/ SYSTEMS FURNITURE MANUF. / INSTALLER. ALL AMP BOXES/CORE LOCATIONS SHALL BE MARKED AT THE FLOOR AND FIELD VERIFIED BY THE FURNITURE VENDOR PRIOR TO INSTALLATION.
8. OUTLETS & SWITCHING – TYPICAL DIAGRAM PROVIDED FOR MOUNTING HEIGHTS & LOCATIONS – ALL VARIATIONS TO BE REVIEWED BY CJ & TENANT. G.C. & SUBCONTRACTORS SHALL BEAR ANY COST ASSOCIATED W/ THE RELOCATION OF INCORRECT OUTLET LOCATIONS.
9. GC TO PROVIDE & INSTALL ONE THERMOSTAT FOR EVERY HVAC ZONE. REFER TO MECHANICAL DWG.'S FOR LOCATIONS. GC IS NOT TO INSTALL T–STATS UNTIL LOCATIONS HAVE BEEN REVIEWED BY ARCHITECT IN THE FIELD. REFER TO MOUNTING HEIGHT SCHEDULE PROVIDED ON SHEET A0.4.
10. PROVIDE PAPER TOWEL & SOAP DISPENSER AT ALL SINK LOCATIONS. REFER TO INTERIOR ELEVATIONS. REFER TO SPECIFICATION IN ACCESSORY LEGEND, SHEET A4.1.0, LETTERS W & Z.
11. ALL APPLIANCES TO BE WHITE, U.N.O.
12. CENTER OF ALL SWITCH PLATES, T–STATS, ETC. TO BE CENTER AT 38" A.F.F.
13. CONTRACTOR TO PROVIDE SUPPORT AND BACKING TO ALL TENANT PROVIDED WALL MOUNTED MONITORS AND T.V.'S; REFER TO EQUIPMENT AND ELECTRICAL POWER PLANS FOR LOCATIONS.

KEY PLAN

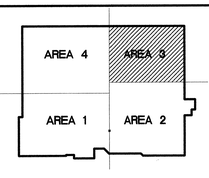

CARRIER JOHNSON

ARCHITECTURE
INTERIOR DESIGN
PLANNING

GORDON R. CARRIER AIA
MICHAEL C. JOHNSON AIA

WILLIAM C. BOCKEN AIA
DEBORAH P. ELLIOTT IIDA

2600 MICHELSON DRIVE
SUITE 400
IRVINE, CALIFORNIA
92612

TEL 949 955-2353
FAX 949 955-2377

1301 THIRD AVENUE
SAN DIEGO, CALIFORNIA
92101

TEL 619 239-2353
FAX 619 239-6227

RECORD DOCUMENTS

THESE DOCUMENTS RELEASED BY CARRIER JOHNSON FOR USE AS RECORD DOCUMENTS WILL SHOW THE REPORTED LOCATION OF THE WORK AND SIGNIFICANT CHANGES MADE DURING CONSTRUCTION. SUCH INFORMATION IS BASED ON UNVERIFIED INFORMATION PROVIDED BY THE CONTRACTOR AND OTHER PARTIES WHICH WILL BE ASSUMED RELIABLE. CARRIER JOHNSON CANNOT, HOWEVER, EXPRESS NOR WARRANT THE ACCURACY OF SUCH INFORMATION AND SHALL NOT BE RESPONSIBLE FOR ANY ERRORS OR OMISSIONS WHICH MAY BE INCORPORATED THEREIN AS A RESULT. FIELD CONDITIONS SHOWN ARE APPROXIMATE AND SHALL REQUIRE FIELD CONFIRMATION OF EXISTING CONDITIONS.

ONTARIO PD:: HEADQUARTERS

2534 S. ARCHIBALD AVE., ONTARIO, CALIFORNIA 91761

FO1 Field Order #13 07.01.03

5 Addendum 5 04.21.2003

3 Addendum 3

2 Addendum 2/Bldg. Dept. Re-Submittal 03.20.2003

Building Dept. Submittal 02.24.2003

ISSUES:

DIRECTORY/FILE NUMBER: 4511–A213FE

XREF'S DRAWINGS:

PROJECT NUMBER: 4511.00

DRAWN BY: CHECKED BY:

DATE: 2/24/03

SCALE: 1/8" = 1'-0"

TITLE: FURNITURE AND EQUIPMENT PLAN FIRST LEVEL AREA 3

DRAWING NO: A2.1.3FE

5

ALL IDEAS, DESIGN ARRANGEMENTS AND PLANS INDICATED OR REPRESENTED BY THIS DRAWING ARE THE PROPRIETARY PROPERTY OF CARRIER JOHNSON AND WERE CREATED, EVOLVED AND DEVELOPED FOR USE ON AND IN CONNECTION WITH THE SPECIFIED PROJECT AND ARE NOT TO BE USED, IN WHOLE OR IN PART, FOR ANY OTHER PROJECT WITHOUT THE WRITTEN PERMISSION OF CARRIER JOHNSON. FILING THESE DRAWINGS OR SPECIFICATIONS WITH ANY PUBLIC AGENCY IS NOT A PUBLICATION OF SAME. NO COPYING, REPRODUCTION OR USE THEREOF IS PERMISSIBLE WITHOUT THE CONSENT OF CARRIER JOHNSON. THIS ROOM WALL/DOOR SHALL BE USED BY, OR DISCLOSED TO ANY PERSON, FIRM, OR CORPORATION FOR ANY PURPOSE WHATSOEVER WITHOUT THE WRITTEN PERMISSION OF

ALL IDEAS, DESIGN, ARRANGEMENTS, OR PLANS SHALL BE USED BY, OR DISCLOSED TO ANY PERSON, FIRM, OR CORPORATION FOR ANY PURPOSE WHATSOEVER WITHOUT THE WRITTEN PERMISSION OF CARRIER JOHNSON. NONE OF SUCH IDEAS, DESIGN, ARRANGEMENTS, OR PLANS SHALL BE USED IN CONNECTION WITH THIS PROJECT. NONE OF SUCH IDEAS, DESIGN, ARRANGEMENTS, OR PLANS SHALL BE USED BY, OR DISCLOSED TO ANY PUBLIC AGENCY IS NOT A PUBLICATION OF SAME. NO COPYING, REPRODUCTION OR USE THEREOF IS PERMISSIBLE WITHOUT THE CONSENT OF CARRIER JOHNSON.

PARTITION LEGEND

SYMBOL	DESCRIPTION
A	ONE HOUR FIRE RATED PARTITION; A/A8.0.1
B	NON-RATED FULL HEIGHT PARTITION; B/A8.0.1
B2	NON-RATED FULL HEIGHT PARTITION W/INSULATION; B/A8.0.1
C	NON-RATED PARTITION TO 6" ABOVE FINISHED CEILING W/INSULATION; C/A8.0.1
C2	NON-RATED PARTITION TO 6" ABOVE FINISH CEILING W/INSULATION; C/A8.0.1
C3	NON-RATED FULL HEIGHT PARTITION W/INSULATION; B/A8.0.1
D	NON-RATED PARTITION TO 6" ABOVE FINISHED CEILING; C/A8.0.1
D2	NON-RATED FULL HEIGHT PARTITION; B/A8.0.1
D3	NON-RATED PARTITION TO 6" ABOVE FINISHED CEILING; -C/A8.0.1
E	FULL HEIGHT PARTION W/BALISTIC MATERIAL TO 8'-0" A.F.F.; -/A8.0.1
F	2 HOUR RATED PARTITION F/A8.0.1
G	PLUMBING CHASE WALL G/A8.0.1
H	PARTIAL HEIGHT WALL H/A8.0.1
J	WALL FURRING J/A8.0.1
K	NON-RATED PARTITION K/A8.0.1
	EXISTING PARTITION TO REMAIN
	EXISTING BLOCK WALL TO REMAIN
X	WIRE MESH PARTITIONS/DOORS TO 12'-0" A.F.F.

NOTE: PROVIDE 6" STUDS WHERE REQUIRED BY PLUMBING OR EQUIPMENT

XXXX	DOOR NUMBER AND/OR "E" = EXISTING TO REMAIN "CR" = CARD READER
F.E.C.	FIRE EXTINGUISHER CABINETS–REFER TO DETAIL 1/A8.0.2

PLAN KEY NOTES

1. PROVIDE HEAVY DUTY STANDARD & BRACKETS, 6 @ 15" DEEP (UNLESS NOTED OTHERWISE) MELAMINE ADJUSTABLE SHELVES, STOP TRACK 12" FROM FLOOR AND CEILING. PROVIDE METAL BACKING AS REQUIRED.

   PROVIDIE ALTERNATE PRICE FOR METAL SHELVING RACKS; NATIONAL MATERIAL HANDLING PRODUCTS; 1-800-676-5161; 36"X12"X87" #HC-636-12 (OR EQUAL), DEPTH TO VARY BASED ON PLAN DIMENSIONS.
2. COAT ROD AND SHELF; REFER TO DETAIL 20/A8.0.2.
3. CMU TO GYPSUM JOINT, REFER TO DETAIL 4/A8.0.2.
4. VERIFY EXISTING WALL TYPE, MODIFY AS REQUIRED TO MEET WALL TYPE "A" – ONE HOUR RATED WALL.
5. NEW BLOCK WALL INFILL TO MATCH EXISTING COLOR, SIZE AND GROUT JOINTS.
6. LAMINATE ONE LAYER 5/8" TYPE "X" GYPSUM BOARD OVER EXISTING BLOCK WALL.
7. PROVIDE 2–HOUR FIRE PROOFING SPRAY ON ROOF STRUCTURE AND ROOM DECK 5'–0" EACH SIDE OF 2–HOUR WALL.
8. LEVEL 3 BALLISTIC GLAZING.
9. SHOWER FLOORS: REFER TO DETAILS 11, 15 AND 16, SHEET A8.0.5.
10. ACCESS FLOORING DETAILS REFER TO SHEET A8.0.6.
11. ADD 16 GA. SECURITY MESH BETWEEN STUD AND GYPSUM BOARD.
12. PROVIDE WRAPPED OPENING IN THE CENTER OF THE OFFICE ELEVATION IN WIDTH. OPENING TO BE 18" X 18" WITH LEDGE AT 42" A.F.F.
13. EACH "DESK" AREA TO HAVE BUTTON "BUZZ" TO PROVIDE ACCESS THROUGH DOOR #1106
14. PROIVDE 36"WX60"H 20 MIN. RATE FIRE ROLLING DOOR; SILL AT 34" AFF; CONNECT TO FIRE ALARM SYSTEM

PLAN GENERAL NOTES

1. ALL WALLS TO BE WALL TYPE "D" CONSTRUCTION UNLESS NOTED OTHERWISE.
2. WHERE NEW BLOCK WALLS ARE REQUIRED; MATCH EXISTING AND ALIGN FINISH FACE.
3. CLEAN EXISTING BLOCK WALLS NOTED TO REMAIN AND PREP FOR PAINT, HIGH GLOSS FINISH.
4. RE: DETAIL 1/A8.0.1 FOR CORRIDORS NOTED TO BE "ONE HOUR RATED CORRIDORS" (SIMILAR CONDITIONS AS REQUIRED).
5. ALL DOOR JAMBS AT HINGE SIDE TO BE 6" AT ALL PERPENDICULAR DRYWALL PARTITION LOCATIONS UNLESS OTHERWISE NOTED.
6. PROVIDE METAL BACKING AS REQUIRED AT INTERIOR PARTITION FOR ALL COUNTERTOPS, CHAIR RAILS AND WALL MOUNTED ACCESSORIES; REFER TO DETAIL 12/A8.0.4.
7. ALL DIMENSIONS ARE FINISH FACE UNLESS NOTED OTHERWISE.
8. ALL FIRE EXTINGUISHER QUANTITIES/LOCATIONS MUST BE APPROVED BY FIRE MARSHALL PRIOR TO INSTALLATION. REFER TO DETAIL 1/A8.0.2.
9. ALL DIMENSIONS ARE MINIMUM DIMENSIONS. NOTIFY ARCHITECT OF ANY DIMENSIONAL BUSTS.
10. PATCH AND REPAIR ALL EXSITING GYPSUM BOARD SURFACES. SAND AND SMOTH FOR NEW PAINT FINISH AS NOTED ON FINISH PLANS. FINISH WALLS FOR LEVEL R FINISH.
11. REFER TO MOUNTING HEIGHT SCHEDULE ON SHEET A0.4 FOR DEVICE AND ACCESSORY HEIGHT LOCATIONS.

KEY PLAN

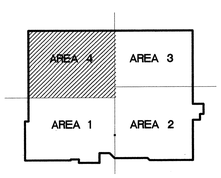

FLOOR PLAN AREA 4 — 1/8"=1'-0"

CARRIER JOHNSON
ARCHITECTURE
INTERIOR DESIGN
PLANNING

GORDON R. CARRIER AIA
MICHAEL C. JOHNSON AIA

WILLIAM C. BOCSEN AIA
DEBORAH F. ELLIOTT IIDA

2600 MICHELSON DRIVE
SUITE 400
IRVINE, CALIFORNIA
92612

TEL 949 955-2353
FAX 949 955-2377

1301 THIRD AVENUE
SAN DIEGO, CALIFORNIA
92101

TEL 619 239-2353
FAX 619 239-6227

RECORD DOCUMENTS

THESE DOCUMENTS RELEASED BY CARRIER JOHNSON FOR USE AS RECORD DOCUMENTS MAY INCLUDE REVISIONS, LOCATION OF THE WORK AND SIGNIFICANT CHANGES MADE DURING THE CONSTRUCTION PROCESS, AND ARE BASED ON INFORMATION FURNISHED BY THE CONTRACTOR, SUBCONTRACTORS AND OTHER PARTIES WHICH WILL BE ASSUMED RELIABLE. CARRIER JOHNSON CANNOT AND DOES NOT WARRANT THE ACCURACY OF SUCH INFORMATION AND SHALL NOT BE RESPONSIBLE FOR ANY ERRORS OR OMISSIONS WHICH MAY BE INCORPORATED THEREIN AS A RESULT OF INACCURATE INFORMATION FURNISHED. FIELD CONFIRMATION OF EXISTING CONDITIONS.

ONTARIO PD:: HEADQUARTERS

2534 S. ARCHIBALD AVE., ONTARIO, CALIFORNIA 91761

Field Order #13, 07.01.03
5 Addendum 5 04.21.2003
3 Addendum 3
2 Addendum 2/Bldg. Dept. Re-Submittal 03.20.2003
Building Dept. Submittal 02.24.2003

ISSUES:

DIRECTORY/FILE NUMBER: 4511–A214

XREF'S DRAWINGS:

PROJECT NUMBER: 4511.00

DRAWN BY: CHECKED BY:

DATE: 2/24/03

SCALE: AS NOTED

TITLE: FLOOR PLAN FIRST LEVEL AREA 4

DRAWING NO: A2.1.4

5

ALL IDEAS, DESIGN, ARRANGEMENTS AND PLANS INDICATED OR REPRESENTED BY THESE DRAWINGS AND PLANS SHALL BE USED BY, OR DISCLOSED TO ANY PERSON, FIRM, OR CORPORATION FOR ANY PURPOSE WHATSOEVER WITHOUT THE WRITTEN PERMISSION OF CARRIER JOHNSON. FILING THESE DRAWINGS OR SPECIFICATIONS WITH ANY PUBLIC AGENCY IS NOT A PUBLICATION OF SAME. NO COPYING, REPRODUCTION OR USE THEREOF IS PERMISSIBLE WITHOUT THE CONSENT OF CARRIER JOHNSON.

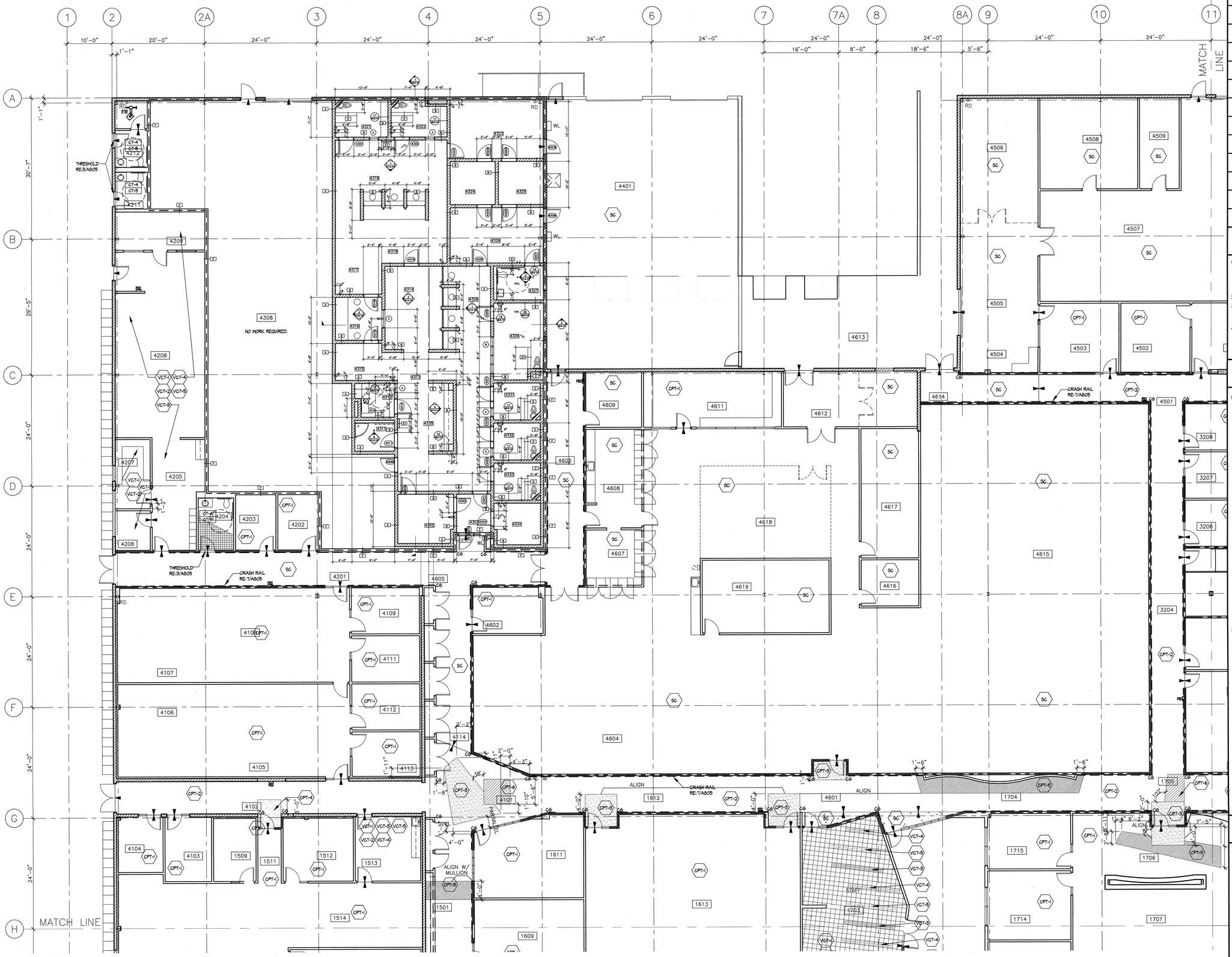

FINISH PLAN LEGEND

SYMBOL	DESCRIPTION
	FLOORING TRANSITIONS; REFER TO SHEET A8.0.5 FOR DETAILS
#	REFER TO SHEET A-2.3.0 FOR FINISH LEGEND DESIGNATION
#	REFER TO SHEET A-2.3.0 FOR FINISH LEGEND DESIGNATION
#	REFER TO FINISH KEYNOTES
CG	CORNER GUARDS
	CRASH RAIL, REFER TO DETAIL 7/A8.0.5

PLAN KEY NOTES

1. ONTARIO PD BADGE LOGO TO BE WATER-JET CUT AS PER DETAIL DRAWINGS USING SPECIFIED SIZE, COLOR AND MATERIAL AS NOTED ON FINISH SCHEDULE. WATER-JET CUTTING TO BE PROVIDED BY SPEC CERAMICS, INC., 1021 LACY ST., ANAHEIM, CA 92805, CONTACT: GAIL KELLY, (949) 808-0134.
2. WALLS IN I.D. WORKROOM TO BE P-1, EPOXY.
3. VISUALLY IMPAIRED STRIPS SHALL BE INSTALLED ON THE UPPER APPROACH AND THE LOWER TREAD, A MINIMUM OF 2" IN WIDTH A MAXIMUM OF 1" FROM THE TREAD NOSE OR LANDING.
4. EXISTING WALL TILE SURFACES AND GROUT JOINTS TO BE RESURFACED. CLEAN AND PREPP FOR NEW EPOXY FINISH COATING.

GENERAL NOTES

1. WHERE VCT 1 – 5 ARE SPECIFIED COLLECTIVELY INSTALL PATTERN RANDOM ,QUARTER-TURNED, WITH THE FOLLOWING QUANTITIES:

   VCT-1 45%
   VCT-2 20%
   VCT-3 9%
   VCT-4 9%
   VCT-5 7%

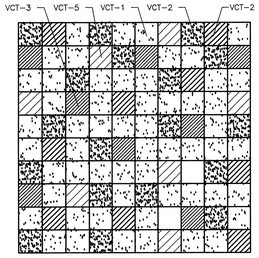

2. REFER TO STONE BASE DETAILS 5 & 7/A8.0.4 WHEN STONE BASE IS SPECIFIED.

FINISH PLAN AREA 4
1/8"=1'-0"

KEY PLAN

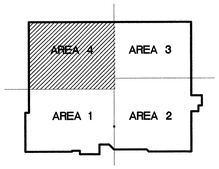

ARCHITECTURE
INTERIOR DESIGN
PLANNING

CARRIER JOHNSON

GORDON R. CARRIER AIA
MICHAEL C. JOHNSON AIA

WILLIAM C. BOCKEN AIA
DEBORAH P. ELLIOTT IIDA

2600 MICHELSON DRIVE
SUITE 400
IRVINE, CALIFORNIA
92612

TEL 949 955-2353
FAX 949 955-2377

1301 THIRD AVENUE
SAN DIEGO, CALIFORNIA
92101

TEL 619 239-2353
FAX 619 239-6227

RECORD DOCUMENTS
THESE DOCUMENTS RELEASED BY CARRIER JOHNSON FOR THE PURPOSE OF RECORDING CONDITIONS AS CONSTRUCTED LOCATION OF THE WORK AND SIGNIFICANT CHANGES MADE DURING THE CONSTRUCTION PROCESS, AND ARE BASED ON MARKED-UP PRINTS, DRAWINGS AND OTHER DATA FURNISHED BY AND OTHER PARTIES WHICH WILL BE ASSUMED RELIABLE. CARRIER JOHNSON CANNOT AND DOES NOT WARRANT THE CORRECTNESS OF ALL SUCH DEFINITIONS AS SHOWN HEREON AND SHALL NOT BE RESPONSIBLE FOR ANY ERRORS OR OMISSIONS WHICH MAY BE INCORPORATED THEREIN AS A RESULT. FUTURE CONSTRUCTION PLANNING MUST INCLUDE FIELD CONFIRMATION OF EXISTING CONDITIONS.

ONTARIO PD:: HEADQUARTERS

2534 S. ARCHIBALD AVE., ONTARIO, CALIFORNIA 91761

Field Order #13, 07.01.03
5 Addendum 5 04.21.2003
3 Addendum 3
2 Addendum 2/Bldg. Dept. Re-Submittal 03.20.2003
Building Dept. Submittal 02.24.2003
ISSUES:
DIRECTORY/FILE NUMBER: 4511-A214FP

XREF'S DRAWINGS:
PROJECT NUMBER: 4511.00
DRAWN BY: CHECKED BY:
DATE: 2/24/03
SCALE: AS NOTED
TITLE: FINISH PLAN FIRST LEVEL AREA 4

DRAWING NO:
A2.1.4FP

ALL IDEAS, DESIGN, ARRANGEMENTS AND PLANS INDICATED OR REPRESENTED BY THIS DRAWING ARE OWNED BY, AND THE PROPERTY OF CARRIER JOHNSON AND WERE CREATED, EVOLVED AND DEVELOPED FOR USE ON, AND IN CONNECTION WITH THE SPECIFIED PROJECT. NONE OF SUCH IDEAS, DESIGNS, ARRANGEMENTS OR PLANS SHALL BE USED BY OR DISCLOSED TO ANY PERSON, FIRM OR CORPORATION FOR ANY PURPOSE WHATSOEVER WITHOUT THE WRITTEN PERMISSION OF CARRIER JOHNSON. FILING THESE DRAWINGS OR SPECIFICATIONS WITH ANY PUBLIC AGENCY IS NOT A PUBLICATION OF SAME. NO COPYING, REPRODUCTION OR USE THEREOF IS PERMISSIBLE WITHOUT THE CONSENT OF CARRIER JOHNSON.

EQUIPMENT SCHEDULE

NO.	NAME	MANUF.	MODEL NO.	SIZE	PROV. BY	INSTAL. BY
1	COPIER	–	–	–	TENT.	TENT.
2	LASER PRINTER	–	–	–	TENT.	TENT.
3	FAX MACHINE	–	–	–	TENT.	TENT.
4	PLOTTER	–	–	–	TENT.	TENT.
5	SCANNER	–	–	–	TENT.	TENT.
6	SHREDDER	–	–	–	TENT.	TENT.
7	TYPEWRITER	–	–	–	TENT.	TENT.
8	MICROWAVE	–	UEM25GY* BLACK	–	TENT.	TENT.
9	COFFEE MACHINE	–	–	–	TENT.	TENT.
10	REF./FREEZER	–	–	–	TENT.	TENT.
11	UNDER–COUNTER REFRIGERATOR	ULINE	29R–BLACK (HT. CANNOT EXCEED 32"AFF OVERALL)		TENT.	TENT.
12	REFRIGERATOR	–	–	–	TENT.	TENT.
13	FREEZER	–	–	–	TENT.	TENT.
14	UNDER–COUNTER DISHWASHER	ASKO	D1876 BLACK ADA	24"X24"X 32–1/4"	CNTR.	CNTR.
15	GARBAGE DISPOSAL	SE IN–SINKRTR.	PRO 77 /APPR. EQUAL		CNTR.	CNTR.
16	VENDING MACHINE	–	–	–	TENT.	TENT.
17	VENDING MACH. W/FLOOR DRAIN	–	–	–	TENT.	TENT.
18	SOAP DISPENSER	BOBRICK	B4112 SURFACE	SATIN SS FINISH	CNTR.	CNTR.
19	PAPER TOWEL DISPENSER	BOBRICK	B4262 SURFACE	SATIN SS FINISH	CNTR.	CNTR.
20	MANUAL PROJECTION SCREEN	–	–	–	TENT.	TENT.
21	ELECTRICAL PROJECTION SCREEN	–	–	–	TENT.	TENT.
22	SECURITY EQUIPMENT	–	–	–	TENT.	TENT.
23	T.V./CABLE	PROVIDE OUTLET; STD. HEIGHT	CABLE AND POWER		TENT.	TENT.
24	WALL MOUNTED T.V./ CABLE	+96 AFF; PROVIDE OUTLET	BRACKET BY G.C. CABLE AND POWER		TENT	G.C.
25	FUME HOOD	–	–	–	TENT.	TENT.
26	DRYING MACHINE	–	–	–	TENT.	TENT.
27	HIGH DENSITY MANUAL FILE	SPACE–SAVER	–	–	CNTR.	CNTR.
28	WEAPON LOCKER	SIRCHIE GROUP	426–4G; WSS8		CNTR.	CNTR.
29	CEILING MOUNTED TV	–	–	–	TENT.	TENT.
30	SECURITY CAMERA	–	–	–	TENT.	TENT.
30A	AUDIBLE SECURITY CAM	–	–	–	TENT.	TENT.
31	EMERGENCY CALL BOX	–	–	–	CNTR.	CNTR.
32	PAY PHONE	–	–	–	CNTR.	CNTR.
33	PLOTTER	–	–	–	TENT.	TENT.
34	TV/VCR	STANDARD	HEIGHT; NO CABLE		TENT.	TENT.

PLAN KEY NOTES

1. MONITOR FOR CAMERA LOCATED IN ROOM #1711 IS LOCATED IN THIS ROOM.
2. MONITORS FOR ALL HOLDING CELL CAMERA'S IS LOCATED IN THIS ROOM; WALL MOUNTED.
3. MONITORS FOR CAMERA'S LOCATED IN ROOMS 1109, 1111, 1108, 2126, 1904, 1913 AND 1912 ARE LOCATED IN THIS ROOM; WALL MOUNTED.
4. MONITORS FOR CAMERA'S LOCATED IN ROOMS 1813 AND 1814 ARE LOCATED IN THIS ROOM; WALL MOUNTED.
5. MONITORS FOR CAMERA'S LOCATED IN ROOMS 4302, 4334, 4202 AND 4203 ARE LOCATED IN THIS ROOM; WALL MOUNTED.
6. T.V. /CABLES

GENERAL NOTES

1. CONTRACTOR TO PROVIDE CONDUIT, RING & PULL–STRING FOR ALL TEL./DATA RECEPTACLES.
2. ALL NEW RECEPTACLE COVER PLATES TO BE WHITE.
3. CONTRACTOR SHALL REPAIR ANY DAMAGED CONSTRUCTION ADJACENT TO ALL ELECTRICAL WORK.
4. ALL OUTLETS & RECEPTACLES INSTALLED ABOVE COUNTERTOPS TO BE MOUNTED VERTICALLY, U.N.O.
5. ELECTRICAL CONTRACTOR TO COORDINATE ELECTRICAL INSTALLATION W/ OTHER SUBCONTRACTORS & SHALL BEAR ANY COST ASSOCIATED W/ THE RELOCATION OF ANY EQUIPMENT INSTALLED WHICH CONFLICTS W/ OTHER EQUIPMENT.
6. ALL OUTLETS & TEL./DATA LINES TO BE GROUPED TOGETHER W/ A MAXIMUM SEPARATION OF 6"–8" O.C., U.N.O.
7. PROVIDE POWER TO SYSTEMS FURNITURE FOR TEL./DATA HOOKUP. SYSTEMS FURNITURE MANUFACTURER TO SUPPLY POWER FEEDS TO CONNECT POWER & SYSTEMS FURN. REFER TO PLAN FOR APPROX. LOCATIONS. PROVIDE SUFFICIENT CIRCUIT'S / AMPS TO POWER GROUPS OF WORKSTATIONS. COORDINATE W/ SYSTEMS FURNITURE MANUF. / INSTALLER. ALL AMP BOXES/CORE LOCATIONS SHALL BE MARKED AT THE FLOOR AND FIELD VERIFIED BY THE FURNITURE VENDOR PRIOR TO INSTALLATION.
8. OUTLETS & SWITCHING – TYPICAL DIAGRAM PROVIDED FOR MOUNTING HEIGHTS & LOCATIONS – ALL VARIATIONS TO BE REVIEWED BY CJ & TENANT. G.C. & SUBCONTRACTORS SHALL BEAR ANY COST ASSOCIATED W/ THE RELOCATION OF INCORRECT OUTLET LOCATIONS.
9. GC TO PROVIDE & INSTALL ONE THERMOSTAT FOR EVERY HVAC ZONE. REFER TO MECHANICAL DWG.'S FOR LOCATIONS. GC IS NOT TO INSTALL T–STATS UNTIL LOCATIONS HAVE BEEN REVIEWED BY ARCHITECT IN THE FIELD. REFER TO MOUNTING HEIGHT SCHEDULE PROVIDED ON SHEET A0.4.
10. PROVIDE PAPER TOWEL & SOAP DISPENSER AT ALL SINK LOCATIONS. REFER TO INTERIOR ELEVATIONS. REFER TO SPECIFICATION IN ACCESSORY LEGEND, SHEET A4.1.0, LETTERS W & Z.
11. ALL APPLIANCES TO BE WHITE, U.N.O.
12. CENTER OF ALL SWITCH PLATES, T–STATS, ETC. TO BE CENTER AT 38" A.F.F.
13. CONTRACTOR TO PROVIDE SUPPORT AND BACKING TO ALL TENANT PROVIDED WALL MOUNTED MONITORS AND T.V.'S; REFER TO EQUIPMENT AND ELECTRICAL POWER PLANS FOR LOCATIONS.

KEY PLAN

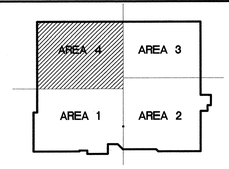

FURNITURE & EQUIPMENT PLAN AREA 4
1/8"=1'-0"

ARCHITECTURE
INTERIOR DESIGN
PLANNING

CARRIER JOHNSON

GORDON R. CARRIER AIA
MICHAEL C. JOHNSON AIA

WILLIAM C. BOCKEN AIA
DEBORAH P. ELLIOTT IIDA

2600 MICHELSON DRIVE
SUITE 400
IRVINE, CALIFORNIA
92612

TEL 949 955-2353
FAX 949 955-2377

1301 THIRD AVENUE
SAN DIEGO, CALIFORNIA
92101

TEL 619 239-2353
FAX 619 239-6227

RECORD DOCUMENTS

THESE DOCUMENTS RELEASED BY CARRIER JOHNSON FOR USE AS RECORD DOCUMENTS WILL SHOW THE REPORTED CONDITIONS AS OBSERVED BY THE CONTRACTOR AND MADE DURING THE CONSTRUCTION PROCESS, AND ARE BASED ON UNVERIFIED INFORMATION PROVIDED BY THE CONTRACTOR AND/OR OTHERS. CARRIER JOHNSON DOES NOT WARRANT THE ACCURACY AND/OR COMPLETENESS OF THIS INFORMATION AND ASSUMES NO RESPONSIBILITY FOR ANY INACCURACIES OR OMISSIONS WHICH MAY BE INCORPORATED THEREIN AS A RESULT. FUTURE CONSTRUCTION PLANNING MUST INCLUDE FIELD CONFIRMATION OF EXISTING CONDITIONS.

ONTARIO PD:: HEADQUARTERS

2534 S. ARCHIBALD AVE., ONTARIO, CALIFORNIA 91761

Field Order #13
Field Order 6 05.27.2003
5 Addendum 5 04.21.2003
3 Addendum 3
2 Addendum 2/Bldg. Dept. Re-Submittal 03.20.2003
Building Dept. Submittal 02.24.2003

ISSUES:
DIRECTORY/FILE NUMBER: 4511–A214FE
XREF'S DRAWINGS:
PROJECT NUMBER: 4511.00
DRAWN BY: CHECKED BY:
DATE: 2/24/03
SCALE: AS NOTED

TITLE: FURNITURE AND EQUIPMENT PLAN FIRST LEVEL AREA 4

DRAWING NO: A2.1.4FE

5

ALL IDEAS, DESIGN, ARRANGEMENTS AND PLANS INDICATED OR REPRESENTED BY THIS DRAWING ARE OWNED BY, AND ARE THE PROPERTY OF CARRIER JOHNSON, AND WERE CREATED, EVOLVED AND DEVELOPED FOR USE ON AND IN CONNECTION WITH THE SPECIFIED PROJECT. NONE OF SUCH IDEAS, DESIGNS, ARRANGEMENTS OR PLANS SHALL BE USED BY OR DISCLOSED TO ANY PERSON, FIRM OR CORPORATION FOR ANY PURPOSE WHATSOEVER WITHOUT THE WRITTEN PERMISSION OF CARRIER JOHNSON. FILING THESE DRAWINGS OR SPECIFICATIONS WITH ANY PUBLIC AGENCY IS NOT A PUBLICATION OF SAME. NO COPYING, REPRODUCTION OR USE THEREOF IS PERMISSIBLE WITHOUT THE CONSENT OF CARRIER JOHNSON.

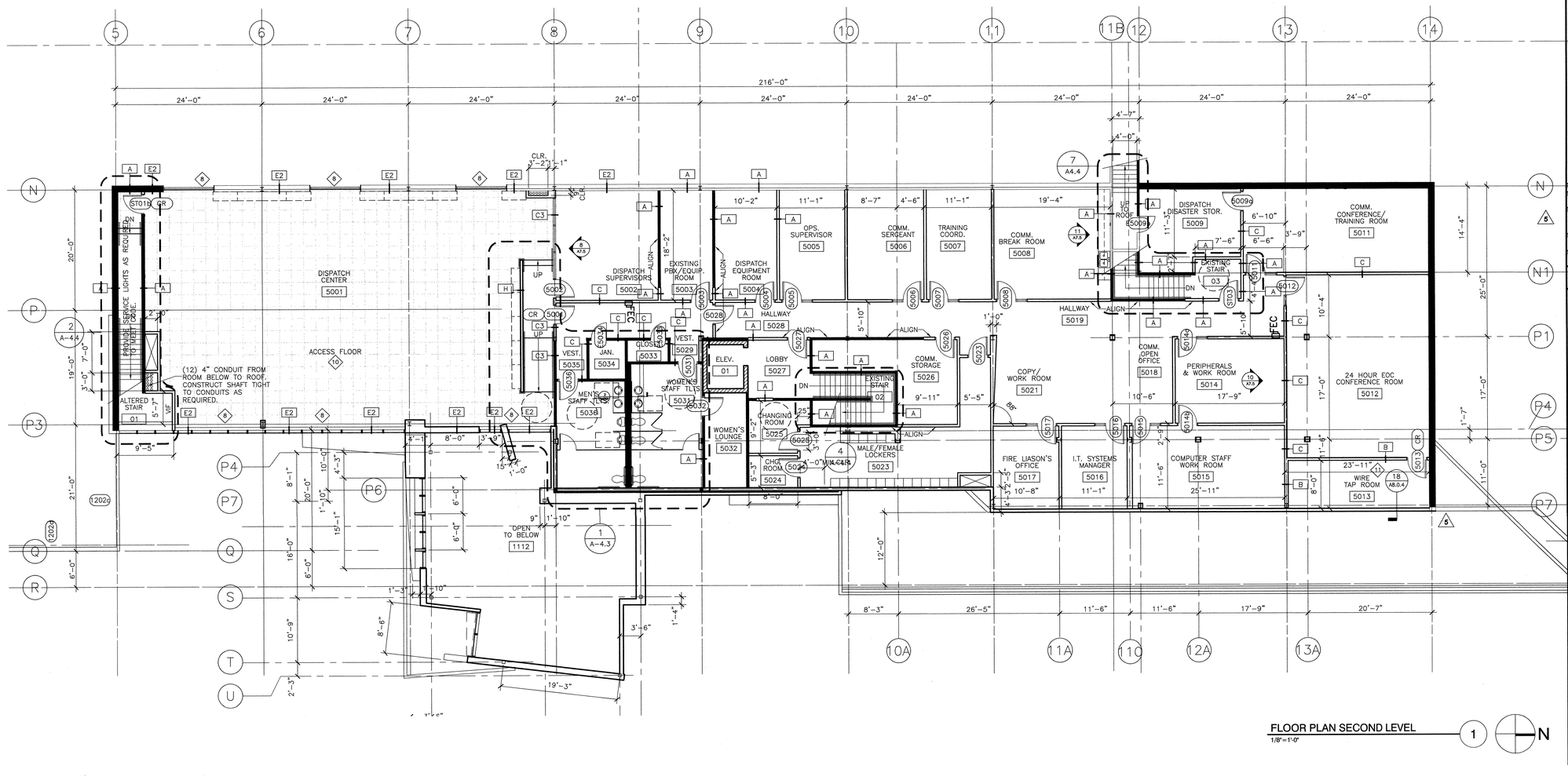

FLOOR PLAN SECOND LEVEL
1/8"=1'-0"

PARTITION LEGEND

SYMBOL	DESCRIPTION
A	ONE HOUR FIRE RATED PARTITION; A/A8.0.1
B	NON-RATED FULL HEIGHT PARTITION; B/A8.0.1
B2	NON-RATED FULL HEIGHT PARTITION W/INSULATION; B/A8.0.1
C	NON-RATED PARTITION TO 6" ABOVE FINISHED CEILING W/INSULATION; C/A8.0.1
C2	NON-RATED PARTITION TO 6" ABOVE FINISH CEILING W/INSULATION; C/A8.0.1
C3	NON-RATED FULL HEIGHT PARTITION W/INSULATION; B/A8.0.1
D	NON-RATED PARTITION TO 6" ABOVE FINISHED CEILING; C/A8.0.1
D2	NON-RATED FULL HEIGHT PARTITION; B/A8.0.1
D3	NON-RATED PARTITION TO 6" ABOVE FINISHED CEILING; ~C/A8.0.1
E	FULL HEIGHT PARTION W/BALISTIC MATERIAL TO 8'-0" A.F.F.; ~/A8.0.1
F	2 HOUR RATED PARTITION F/A8.0.1
G	PLUMBING CHASE WALL G/A8.0.1
H	PARTIAL HEIGHT WALL H/A8.0.1
J	WALL FURRING J/A8.0.1
K	NON-RATED PARTITION K/A8.0.1
	EXISTING PARTITION TO REMAIN
	EXISTING BLOCK WALL TO REMAIN
X	WIRE MESH PARTITIONS/DOORS TO 12'-0" A.F.F.

NOTE: PROVIDE 6" STUDS WHERE REQUIRED BY PLUMBING OR EQUIPMENT

XXXX	DOOR NUMBER AND/OR "E" = EXISTING TO REMAIN "CR" = CARD READER
F.E.C.	FIRE EXTINGUISHER CABINETS-REFER TO DETAIL 1/A8.0.2

PLAN KEY NOTES

1. PROVIDE HEAVY DUTY STANDARD & BRACKETS, 6 @ 15" DEEP (UNLESS NOTED OTHERWISE) MELAMINE ADJUSTABLE SHELVES, STOP TRACK 12" FROM FLOOR AND CEILING. PROVIDE METAL BACKING AS REQUIRED.

   PROVIDIE ALTERNATE PRICE FOR METAL SHELVING RACKS; NATIONAL MATERIAL HANDLING PRODUCTS; 1-800-676-5161; 36"X12"X87" #HC-636-12 (OR EQUAL), DEPTH TO VARY BASED ON PLAN DIMENSIONS.
2. COAT ROD AND SHELF; REFER TO DETAIL 20/A8.0.2.
3. CMU TO GYPSUM JOINT, REFER TO DETAIL 4/A8.0.2.
4. VERIFY EXISTING WALL TYPE, MODIFY AS REQUIRED TO MEET WALL TYPE "A" – ONE HOUR RATED WALL.
5. NEW BLOCK WALL INFILL TO MATCH EXISTING COLOR, SIZE AND GROUT JOINTS.
6. LAMINATE ONE LAYER 5/8" TYPE "X" GYPSUM BOARD OVER EXISTING BLOCK WALL.
7. PROVIDE 2-HOUR FIRE PROOFING SPRAY ON ROOF STRUCTURE AND ROOM DECK 5'-0" EACH SIDE OF 2-HOUR WALL.
8. LEVEL 3 BALLISTIC GLAZING.
9. SHOWER FLOORS: REFER TO DETAILS 11, 15 AND 16, SHEET A8.0.5.
10. ACCESS FLOORING DETAILS REFER TO SHEET A8.0.6.
11. ADD 16 GA. SECURITY MESH BETWEEN STUD AND GYPSUM BOARD.
12. PROVIDE WRAPPED OPENING IN THE CENTER OF THE OFFICE ELEVATION IN WIDTH. OPENING TO BE 18" X 18" WITH LEDGE AT 42" A.F.F.
13. EACH "DESK" AREA TO HAVE BUTTON "BUZZ" TO PROVIDE ACCESS THROUGH DOOR #1106
14. PROVIDE 36"WX60"H 20 MIN. RATE FIRE ROLLING DOOR; SILL AT 34" AFF; CONNECT TO FIRE ALARM SYSTEM

PLAN GENERAL NOTES

1. ALL WALLS TO BE WALL TYPE "D" CONSTRUCTION UNLESS NOTED OTHERWISE.
2. WHERE NEW BLOCK WALLS ARE REQUIRED; MATCH EXISTING AND ALIGN FINISH FACE.
3. CLEAN EXISTING BLOCK WALLS NOTED TO REMAIN AND PREP FOR PAINT, HIGH GLOSS FINISH.
4. RE: DETAIL 1/A8.0.1 FOR CORRIDORS NOTED TO BE "ONE HOUR RATED CORRIDORS" (SIMILAR CONDITIONS AS REQUIRED).
5. ALL DOOR JAMBS AT HINGE SIDE TO BE 6" AT ALL PERPENDICULAR DRYWALL PARTITION LOCATIONS UNLESS OTHERWISE NOTED.
6. PROVIDE METAL BACKING AS REQUIRED AT INTERIOR PARTITION FOR ALL COUNTERTOPS, CHAIR RAILS AND WALL MOUNTED ACCESSORIES; REFER TO DETAIL 12/A8.0.4.
7. ALL DIMENSIONS ARE FINISH FACE UNLESS NOTED OTHERWISE.
8. ALL FIRE EXTINGUISHER QUANTITIES/LOCATIONS MUST BE APPROVED BY FIRE MARSHALL PRIOR TO INSTALLATION. REFER TO DETAIL 1/A8.0.2.
9. ALL DIMENSIONS ARE MINIMUM DIMENSIONS. NOTIFY ARCHITECT OF ANY DIMENSIONAL BUSTS.
10. PATCH AND REPAIR ALL EXISTING GYPSUM BOARD SURFACES. SAND AND SMOTH FOR NEW PAINT FINISH AS NOTED ON FINISH PLANS. FINISH WALLS FOR LEVEL R FINISH.
11. REFER TO MOUNTING HEIGHT SCHEDULE ON SHEET A0.4 FOR DEVICE AND ACCESSORY HEIGHT LOCATIONS.

KEY PLAN

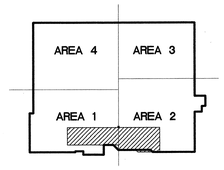

CARRIER JOHNSON
ARCHITECTURE
INTERIOR DESIGN
PLANNING
GORDON R. CARRIER AIA
MICHAEL C. JOHNSON AIA
WILLIAM C. BOCKEN AIA
DEBORAH P. ELLIOTT IIDA
2600 MICHELSON DRIVE SUITE 400 IRVINE, CALIFORNIA 92612
TEL 949 955-2353 FAX 949 955-2377
1301 THIRD AVENUE SAN DIEGO, CALIFORNIA 92101
TEL 619 239-2353 FAX 619 239-6227

RECORD DOCUMENTS
THESE DOCUMENTS RELEASED BY CARRIER JOHNSON FOR USE AS RECORD DOCUMENTS HAVE BEEN REVISED TO REFLECT LOCATION OF THE WORK AND SIGNIFICANT CHANGES MADE DURING THE CONSTRUCTION PROCESS, AND ARE BASED ON UNVERIFIED INFORMATION PROVIDED BY THE CONTRACTOR AND OTHER PARTIES. CARRIER JOHNSON HAS RELIED ON THE ACCURACY AND/OR COMPLETENESS OF THIS INFORMATION AND SHALL NOT BE RESPONSIBLE FOR ANY ERRORS OR OMISSIONS WHICH MAY BE INCORPORATED THEREIN AS A RESULT. FUTURE CONSTRUCTION PLANNING MUST INCLUDE FIELD CONFIRMATION OF EXISTING CONDITIONS.

ONTARIO PD:: HEADQUARTERS

2534 S. ARCHIBALD AVE., ONTARIO, CALIFORNIA 91761

△5 Field Order #13 07.0103
△5 Addendum 5 04.212003
△3 Addendum 3
△2 Addendum 2/Bldg Dept. Re-Submittal 03.20.2003
Building Dept. Submittal 02.24.2003

ISSUES:
DIRECTORY/FILE NUMBER: 4511-A225
XREF'S DRAWINGS:
PROJECT NUMBER: 4511.00
DRAWN BY: CHECKED BY:
DATE: 2/24/03
SCALE: AS NOTED
TITLE: FLOOR PLAN SECOND LEVEL

DRAWING NO: A2.2.5
△5

ALL IDEAS, DESIGN, ARRANGEMENTS AND PLANS INDICATED OR REPRESENTED BY THIS DRAWING OR MODEL, ARE AND SHALL REMAIN THE PROPERTY OF CARRIER JOHNSON. NO PART THEREOF SHALL BE USED BY OR DISCLOSED TO ANY PERSON, FIRM, OR CORPORATION FOR ANY PURPOSE WHATSOEVER WITHOUT THE WRITTEN PERMISSION OF CARRIER JOHNSON. FILING THESE DRAWINGS OR SPECIFICATIONS WITH ANY PUBLIC AGENCY IS NOT A PUBLICATION OF SAME. NO COPYING, REPRODUCTION OR USE THEREOF IS PERMISSIBLE WITHOUT THE CONSENT OF CARRIER JOHNSON.

FINISH PLAN LEGEND

SYMBOL	DESCRIPTION
	FLOORING TRANSITIONS; REFER TO SHEET A8.0.5 FOR DETAILS
#	REFER TO SHEET A-2.3.0 FOR FINISH LEGEND DESIGNATION
#	REFER TO SHEET A-2.3.0 FOR FINISH LEGEND DESIGNATION
#	REFER TO FINISH KEYNOTES
CG	CORNER GUARDS
— — —	CRASH RAIL, REFER TO DETAIL 7/A8.0.5

PLAN KEY NOTES

1. ONTARIO PD BADGE LOGO TO BE WATER-JET CUT AS PER DETAIL DRAWINGS USING SPECIFIED SIZE, COLOR AND MATERIAL AS NOTED ON FINISH SCHEDULE. WATER-JET CUTTING TO BE PROVIDED BY SPEC CERAMICS, INC., 1021 LACY ST., ANAHEIM, CA 92805, CONTACT: GAIL KELLY, (949) 808-0134.
2. WALLS IN I.D. WORKROOM TO BE P-1, EPOXY.
3. VISUALLY IMPAIRED STRIPS SHALL BE INSTALLED ON THE UPPER APPROACH AND THE LOWER TREAD, A MINIMUM OF 2" IN WIDTH A MAXIMUM OF 1" FROM THE TREAD NOSE OR LANDING.
4. EXISTING WALL TILE SURFACES AND GROUT JOINTS TO BE RESURFACED. CLEAN AND PREPP FOR NEW EPOXY FINISH COATING.

GENERAL NOTES

1. WHERE VCT 1 – 5 ARE SPECIFIED COLLECTIVELY INSTALL PATTERN RANDOM ,QUARTER-TURNED, WITH THE FOLLOWING QUANTITIES:

VCT-1 45%
VCT-2 20%
VCT-3 9%
VCT-4 9%
VCT-5 7%

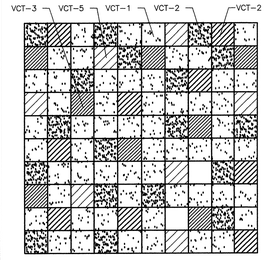

2. REFER TO STONE BASE DETAILS 5 & 7/A8.0.4 WHEN STONE BASE IS SPECIFIED.

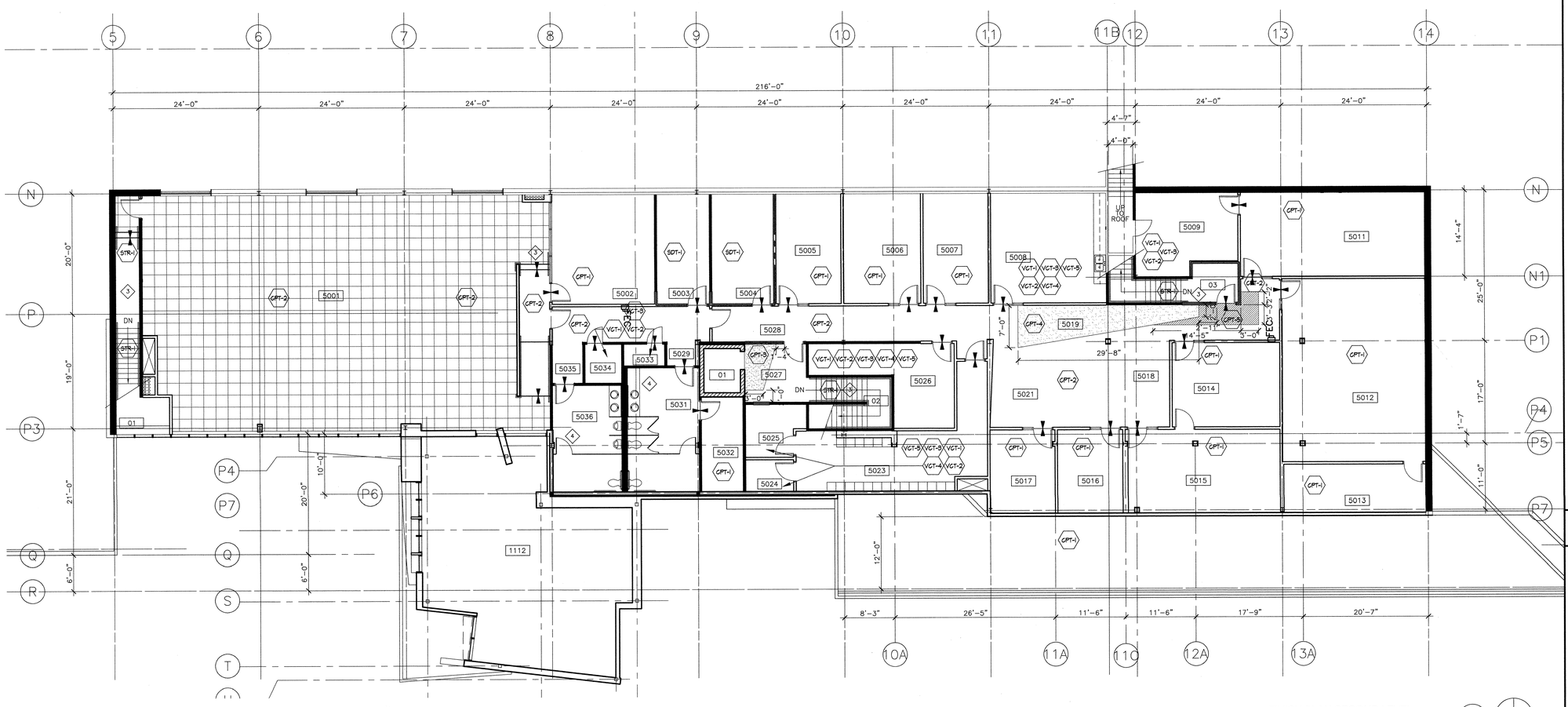

FINISH PLAN SECOND LEVEL
1/8"=1'-0"

KEY PLAN

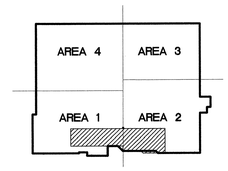

CARRIER JOHNSON

ARCHITECTURE
INTERIOR DESIGN
PLANNING

GORDON R. CARRIER AIA
MICHAEL C. JOHNSON AIA

WILLIAM C. BOCKEN AIA
DEBORAH P. ELLIOTT IIDA

2600 MICHELSON DRIVE
SUITE 400
IRVINE, CALIFORNIA
92612

TEL 949 955-2353
FAX 949 955-2377

1301 THIRD AVENUE
SAN DIEGO, CALIFORNIA
92101

TEL 619 239-2353
FAX 619 239-6227

RECORD DOCUMENTS
THESE DOCUMENTS RELEASED BY CARRIER JOHNSON FOR CONSTRUCTION ON THE DATE AS SHOWN HEREON. ANY REVISIONS, LOCATION OF THE WORK AND SIGNIFICANT CHANGES MADE DURING THE CONSTRUCTION PROCESS, AND ARE BASED ON MARKED UP PRINTS, DRAWINGS, AND OTHER DATA FURNISHED BY CONTRACTOR AND OTHER PARTIES WHICH WILL BE ASSUMED RELIABLE. CARRIER JOHNSON CANNOT AND DOES NOT WARRANT THE COMPLETENESS OR ACCURACY OF SUCH INFORMATION AND SHALL NOT BE RESPONSIBLE FOR ANY ERRORS OR OMISSIONS WHICH MAY BE INCORPORATED THEREIN AS A RESULT. FUTURE CONSTRUCTION PLANNING MUST INCLUDE FIELD CONFIRMATION OF EXISTING CONDITIONS.

ONTARIO PD:: HEADQUARTERS

2534 S. ARCHIBALD AVE., ONTARIO, CALIFORNIA 91761

1 Field Order #13 07.01.03
5 Addendum 5 04.21.2003
3 Addendum 3
2 Addendum 2/Bldg. Dept. Re-Submittal 03.20.2003
Building Dept. Submittal 02.24.2003
ISSUES:
DIRECTORY/FILE NUMBER: 4511-A225FP

XREF'S DRAWINGS:

PROJECT NUMBER: 4511.00
DRAWN BY: CHECKED BY:
DATE: 2/24/03
SCALE: AS NOTED
TITLE: FINISH PLAN SECOND LEVEL

DRAWING NO: A2.2.5FP

ALL IDEAS, DESIGN, ARRANGEMENTS AND PLANS INDICATED OR REPRESENTED BY THIS DRAWING ARE OWNED BY AND THE PROPERTY OF CARRIER JOHNSON AND WERE CREATED, EVOLVED AND DEVELOPED FOR USE ON, AND IN CONNECTION WITH THIS PROJECT. NONE OF SUCH IDEAS, DESIGN, ARRANGEMENTS OR PLANS SHALL BE USED BY OR DISCLOSED TO ANY PERSON, FIRM OR CORPORATION FOR ANY PURPOSE WHATSOEVER WITHOUT THE WRITTEN PERMISSION OF CARRIER JOHNSON. FILING THESE DRAWINGS OR SPECIFICATIONS WITH ANY PUBLIC AGENCY IS NOT A PUBLICATION OF SAME. NO COPYING, REPRODUCTION OR USE THEREOF IS PERMISSIBLE WITHOUT THE CONSENT OF CARRIER JOHNSON.

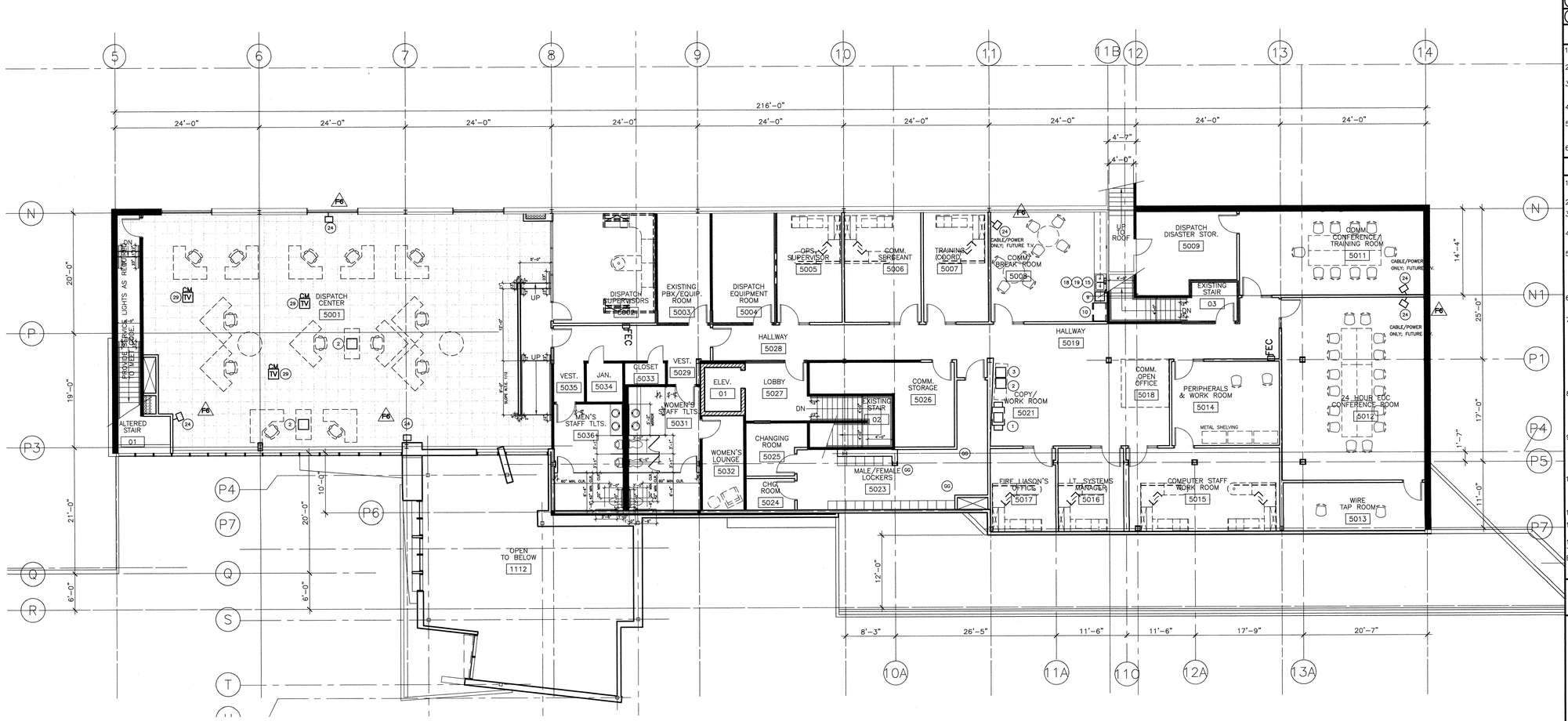

EQUIPMENT SCHEDULE

NO.	NAME	MANUF.	MODEL NO.	SIZE	PROV. BY	INSTALL. BY
1	COPIER	–	–	–	TENT.	TENT.
2	LASER PRINTER	–	–	–	TENT.	TENT.
3	FAX MACHINE	–	–	–	TENT.	TENT.
4	PLOTTER	–	–	–	TENT.	TENT.
5	SCANNER	–	–	–	TENT.	TENT.
6	SHREDDER	–	–	–	TENT.	TENT.
7	TYPEWRITER	–	–	–	TENT.	TENT.
8	MICROWAVE	–	JEM25GY* BLACK	–	TENT.	TENT.
9	COFFEE MACHINE	–	–	–	TENT.	TENT.
10	REF./FREEZER	–	–	–	TENT.	TENT.
11	UNDER-COUNTER REFRIGERATOR	JULINE	29R–BLACK (HT. CANNOT EXCEED 32"AFF OVERALL)		TENT.	TENT.
12	REFRIGERATOR	–	–	–	TENT.	TENT.
13	FREEZER	–	–	–	TENT.	TENT.
14	UNDER-COUNTER DISHWASHER	ASKO	D1876 BLACK ADA	24"X24"X 32-1/4"	CNTR.	CNTR.
15	GARBAGE DISPOSAL	SE IN-SINKRTR.	PRO 77 /APPR. EQUAL		CNTR.	CNTR.
16	VENDING MACHINE	–	–	–	TENT.	TENT.
17	VENDING MACH. W/FLOOR DRAIN	–	–	–	TENT.	TENT.
18	SOAP DISPENSER	BOBRICK	B4112 SURFACE	SATIN SS FINISH	CNTR.	CNTR.
19	PAPER TOWEL DISPENSER	BOBRICK	B4262 SURFACE	SATIN SS FINISH	CNTR.	CNTR.
20	MANUAL PROJECTION SCREEN	–	–	–	TENT.	TENT.
21	ELECTRICAL PROJECTION SCREEN	–	–	–	TENT.	TENT.
22	SECURITY EQUIPMENT	–	–	–	TENT.	TENT.
23	T.V./CABLE	PROVIDE CABLE AND POWER OUTLET; STD. HEIGHT			TENT.	TENT.
24	WALL MOUNTED T.V./ CABLE	+96 AFF; PROVIDE CABLE AND POWER OUTLET	BRACKET BY G.C.		TENT.	G.C.
25	FUME HOOD	–	–	–	TENT.	TENT.
26	DRYING MACHINE	–	–	–	TENT.	TENT.
27	HIGH DENSITY MANUAL FILE	SPACE-SAVER	–	–	CNTR.	CNTR.
28	WEAPON LOCKER	SIRCHIE GROUP	#26-4G; #SS8		CNTR.	CNTR.
29	CEILING MOUNTED TV	–	–	–	TENT.	TENT.
30	SECURITY CAMERA	–	–	–	TENT.	TENT.
30A	AUDIBLE SECURITY CAM	–	–	–	TENT.	TENT.
31	EMERGENCY CALL BOX	–	–	–	CNTR.	CNTR.
32	PAY PHONE	–	–	–	CNTR.	CNTR.
33	PLOTTER	–	–	–	TENT.	TENT.
34	TV/VCR	STANDARD HEIGHT; NO CABLE			TENT.	TENT.

PLAN KEY NOTES

1. MONITOR FOR CAMERA LOCATED IN ROOM #1711 IS LOCATED IN THIS ROOM.
2. MONITORS FOR ALL HOLDING CELL CAMERA'S IS LOCATED IN THIS ROOM; WALL MOUNTED.
3. MONITORS FOR CAMERA'S LOCATED IN ROOMS 1109, 1111, 1108, 2126, 1904, 1913 AND 1912 ARE LOCATED IN THIS ROOM; WALL MOUNTED.
4. MONITORS FOR CAMERA'S LOCATED IN ROOMS 1813 AND 1814 ARE LOCATED IN THIS ROOM; WALL MOUNTED.
5. MONITORS FOR CAMERA'S LOCATED IN ROOMS 4302, 4334, 4202 AND 4203 ARE LOCATED IN THIS ROOM; WALL MOUNTED.
6. T.V. /CABLES

GENERAL NOTES

1. CONTRACTOR TO PROVIDE CONDUIT, RING & PULL-STRING FOR ALL TEL./DATA RECEPTACLES.
2. ALL NEW RECEPTACLE COVER PLATES TO BE WHITE.
3. CONTRACTOR SHALL REPAIR ANY DAMAGED CONSTRUCTION ADJACENT TO ALL ELECTRICAL WORK.
4. ALL OUTLETS & RECEPTACLES INSTALLED ABOVE COUNTERTOPS TO BE MOUNTED VERTICALLY, U.N.O.
5. ELECTRICAL CONTRACTOR TO COORDINATE ELECTRICAL INSTALLATION W/ OTHER SUBCONTRACTORS & SHALL BEAR ANY COST ASSOCIATED W/ THE RELOCATION OF ANY EQUIPMENT INSTALLED WHICH CONFLICTS W/ OTHER EQUIPMENT.
6. ALL OUTLETS & TEL./DATA LINES TO BE GROUPED TOGETHER W/ A MAXIMUM SEPARATION OF 6"–8" O.C., U.N.O.
7. PROVIDE POWER TO SYSTEMS FURNITURE FOR TEL./DATA HOOKUP. SYSTEMS FURNITURE MANUFACTURER TO SUPPLY POWER FEEDS TO CONNECT POWER & SYSTEMS FURN. REFER TO PLAN FOR APPROX. LOCATIONS. PROVIDE SUFFICIENT CIRCUIT'S / AMPS TO POWER GROUPS OF WORKSTATIONS. COORDINATE W/ SYSTEMS FURNITURE MANUF. / INSTALLER. ALL AMP BOXES/CORE LOCATIONS SHALL BE MARKED AT THE FLOOR AND FIELD VERIFIED BY THE FURNITURE VENDOR PRIOR TO INSTALLATION.
8. OUTLETS & SWITCHING – TYPICAL DIAGRAM PROVIDED FOR MOUNTING HEIGHTS & LOCATIONS – ALL VARIATIONS TO BE REVIEWED BY CJ & TENANT. G.C. & SUBCONTRACTORS SHALL BEAR ANY COST ASSOCIATED W/ THE RELOCATION OF INCORRECT OUTLET LOCATIONS.
9. GC TO PROVIDE & INSTALL ONE THERMOSTAT FOR EVERY HVAC ZONE. REFER TO MECHANICAL DWG.'S FOR LOCATIONS. GC IS NOT TO INSTALL T-STATS UNTIL LOCATIONS HAVE BEEN REVIEWED BY ARCHITECT IN THE FIELD. REFER TO MOUNTING HEIGHT SCHEDULE PROVIDED ON SHEET A0.4.
10. PROVIDE PAPER TOWEL & SOAP DISPENSER AT ALL SINK LOCATIONS. REFER TO INTERIOR ELEVATIONS. REFER TO SPECIFICATION IN ACCESSORY LEGEND, SHEET A4.1.0, LETTERS W & Z.
11. ALL APPLIANCES TO BE WHITE, U.N.O.
12. CENTER OF ALL SWITCH PLATES, T-STATS, ETC. TO BE CENTER AT 38" A.F.F.
13. CONTRACTOR TO PROVIDE SUPPORT AND BACKING TO ALL TENANT PROVIDED WALL MOUNTED MONITORS AND T.V.'S; REFER TO EQUIPMENT AND ELECTRICAL POWER PLANS FOR LOCATIONS.

KEY PLAN

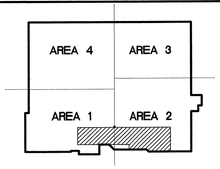

CARRIER JOHNSON

ARCHITECTURE
INTERIOR DESIGN
PLANNING

GORDON R. CARRIER AIA
MICHAEL C. JOHNSON AIA

WILLIAM C. ROCKEN AIA
DEBORAH P. ELLIOTT IIDA

2600 MICHELSON DRIVE
SUITE 400
IRVINE, CALIFORNIA
92612

TEL 949 955-2353
FAX 949 955-2377

1301 THIRD AVENUE
SAN DIEGO, CALIFORNIA
92101

TEL 619 239-2353
FAX 619 239-6227

RECORD DOCUMENTS

THESE DOCUMENTS RELEASED BY CARRIER JOHNSON FOR USE AS RECORD DOCUMENTS WILL SHOW THE REPOSITED LOCATION OF WORK AS NOTED AND SHOWN AT THAT TIME DURING THE CONSTRUCTION PROCESS, AND ARE BASED ON UNVERIFIED INFORMATION PROVIDED BY THE CONTRACTOR (AS-BUILT INFORMATION). ALL BE ADVISED THAT CARRIER JOHNSON CANNOT AND DOES NOT WARRANT THE ACCURACY AND/OR COMPLETENESS OF THIS INFORMATION AND SHALL NOT BE RESPONSIBLE FOR ANY ERRORS OR OMISSIONS WHICH MAY BE CONTAINED IN THESE AS-BUILTS AS A RESULT. FUTURE CONSTRUCTION PLANNING MUST INCLUDE FIELD CONFIRMATION OF EXISTING CONDITIONS.

ONTARIO PD:: HEADQUARTERS

2534 S. ARCHIBALD AVE., ONTARIO, CALIFORNIA 91761

F6 Field Order 6 05.27.2003
F13 Field Order #13 07.01.03
5 Addendum 5 04.21.2003
3 Addendum 3
2 Addendum 2/Bldg. Dept. Re-Submittal 03.20.2003
Building Dept. Submittal 02.24.2003

ISSUES:
DIRECTORY/FILE NUMBER: 4511-A225FE
XREF'S DRAWINGS:
PROJECT NUMBER: 4511.00
DRAWN BY: CHECKED BY:
DATE: 2/24/03
SCALE: AS NOTED

TITLE:
FURNITURE AND EQUIPMENT PLAN SECOND LEVEL

DRAWING NO:
A2.2.5FE
5

FINISH LEGEND

CPT-1 BROADLOOM CARPET

MFR	DESIGNWEAVE
SERIES	CALYPSO Z6333
COLOR	00436 OCEAN SPRAY
DESCRIPTION	LOOP PILE GRAPHIC
CONTACT	JEFF LEPLEY PAGER (562) 406-4891

CPT-2 CARPET TILE

MFR	SHAW CARPETS
SERIES	MADRID III SQ 60361
COLOR	57512 HOLDING ON
SIZE	24" X 24" TILES
BACKING	ECOWORX
CONTACT	ROB HOLT PHONE (800) 424-7429 X8426

CPT-3 CARPET TILE

MFR	SHAW CARPETS
SERIES	GROUNDWORKS II 59033
COLOR	53420 WATERCOURSE
SIZE	24" X 24" TILES
BACKING	ECOWORX
CONTACT	ROB HOLT PHONE (800) 424-7429 X8426

CPT-4 CARPET TILE

MFR	SHAW CARPETS
SERIES	CHIT CHAT EW SQ 59249
COLOR	49100 BIRCH
SIZE	24" X 24" TILES
BACKING	ECOWORX
CONTACT	ROB HOLT PHONE (800) 424-7429 X8426

CPT-5 CARPET TILE

MFR	SHAW CARPETS
SERIES	SYNTHESIS II SQ 59252
COLOR	50485 ROYAL
SIZE	24" X 24" TILES
BACKING	ECOWORX
CONTACT	ROB HOLT PHONE (800) 424-7429 X8426

CPT-6 CARPET TILE

MFR	SHAW CARPETS
SERIES	SYNTHESIS II SQ 59252
COLOR	50860 CRANBERRY
SIZE	24" X 24" TILES
BACKING	ECOWORX
CONTACT	ROB HOLT PHONE (800) 424-7429 X8426

ST-1 STONE – FIELD TILE

MFR	SPEC CERAMICS
TYPE	QUARTZITEC/QUARTZSTONE 2000
NAME	2127 DESERT BEIGE
FINISH	HONED
SIZE	16" X 16"
INSTALLATION	THINSET
GROUT	–
CONTACT	GAIL KELLY (714) 808-0134 X 238

ST-2 STONE – FIELD TILE

MFR	SPEC CERAMICS
TYPE	QUARTZITEC/QUARTZSTONE 2000
NAME	2128 GOLD
FINISH	HONED
SIZE	16" X 16"
INSTALLATION	THINSET
GROUT	–

ST-3 STONE – FIELD TILE

MFR	SPEC CERAMICS
TYPE	QUARTZITEC/QUARTZSTONE 2000
NAME	2134 STEEL
FINISH	HONED
SIZE	16" X 16"
INSTALLATION	THINSET
GROUT	–

ST-4 STONE – BADGE TILE

MFR	SPEC CERAMICS
TYPE	QUARTZITEC/QUARTZSTONE 2000
NAME	2119 LINEN GREY
FINISH	POLISHED
SIZE	WATERCUT
INSTALLATION	THINSET
GROUT	–

ST-5 STONE – BADGE TILE

MFR	SPEC CERAMICS
TYPE	QUARTZITEC/QUARTZSTONE 2000
NAME	2138 PODIAC CREAM
FINISH	POLISHED
SIZE	WATERCUT
INSTALLATION	THINSET
GROUT	–

ST-6 STONE – BADGE TILE

MFR	SPEC CERAMICS
TYPE	QUARTZITEC/QUARTZSTONE 2000
NAME	2131 AURORA BLUE
FINISH	POLISHED
SIZE	WATERCUT
INSTALLATION	THINSET
GROUT	–

ST-7 STONE – BADGE TILE

MFR	SPEC CERAMICS
TYPE	QUARTZITEC/QUARTZSTONE 2000
NAME	2135 VERMILION
FINISH	POLISHED
SIZE	WATERCUT
INSTALLATION	THINSET
GROUT	–

ST-8 STONE – BADGE TILE

MFR	SPEC CERAMICS
TYPE	QUARTZITEC/QUARTZSTONE 3000
NAME	3165 TROPICAL BLUE
FINISH	POLISHED
SIZE	WATERCUT
INSTALLATION	THINSET
GROUT	–

ST-9 STONE – BADGE TILE

MFR	SPEC CERAMICS
TYPE	QUARTZITEC/QUARTZSTONE 2000
NAME	2124 REDWOOD
FINISH	POLISHED
SIZE	WATERCUT
INSTALLATION	THINSET
GROUT	–

ST-10 STONE – BADGE TILE

MFR	SPEC CERAMICS
TYPE	QUARTZITEC/QUARTZSTONE 2000
NAME	2117 GLACIER WHITE
FINISH	POLISHED
SIZE	WATERCUT
INSTALLATION	THINSET
GROUT	–

VCT-1 VINYL COMPOSITE TILE

MFR	ARMSTRONG
SERIES	STANDARD EXCELON
COLOR	51809 DESERT BEIGE
SIZE	12" X 12"

VCT-2 VINYL COMPOSITE TILE

MFR	ARMSTRONG
SERIES	STANDARD EXCELON
COLOR	51805 CAMEL BEIGE
SIZE	12" X 12"

VCT-3 VINYL COMPOSITE TILE

MFR	ARMSTRONG
SERIES	STANDARD EXCELON
COLOR	51915 CHARCOAL
SIZE	12" X 12"

VCT-4 VINYL COMPOSITE TILE

MFR	ARMSTRONG
SERIES	STANDARD EXCELON
COLOR	51819 BLUE SKIES
SIZE	12" X 12"

VCT-5 VINYL COMPOSITE TILE

MFR	ARMSTRONG
SERIES	STANDARD EXCELON
COLOR	51814 POMEGRANATE RED
SIZE	12" X 12"

SDT-1 STATIC DISSIPATIVE TILE (2)

MFR	ARMSTRONG
SERIES	EXCELON SDT
COLOR	51951 ARMOR GRAY
SIZE	12" X 12"

SC SEALED CONCRETE

TYPE	CLEAR SEALER
FINISH	HIGH GLOSS

STR-1 STAIR & LANDING

MFR	FREUDENBERG / NORA RUBBER FLOORING

STAIR – NOSING/TREAD/RISERS

SERIES	NORAMENT 1-PC. STAIRTREAD 825 C
COLOR	0749 STONE GREY / ROUND

LANDING

SERIES	NORAMENT LANDING TILES 825 C
COLOR	0749 STONE GREY / ROUND

VISUALLY IMPAIRED STRIPS
NORA ACCESSORIES / CORAL RED

WOM-1 WALK-OFF MAT
NOTE: REFER TO SPECIFICATIONS SECTION 12690

SV-1 SHEET VINYL

MFR	ARMSTRONG
SERIES	MEDINTECH
COLOR	86431 COOL GRAY

RB-1 RUBBER BASE

MFR	BURKE MERCER
MATERIAL	RUBBER
SIZE	4" & 6" COVE
COLOR	660 SLATE
TYPE	ROLLED GOODS

NOTE: SEE GENERAL NOTE #6.

SB-1 STONE – STANDARD FLAT BASE TILE

MFR	SPEC CERAMICS
TYPE	QUARTZITEC/QUARTZSTONE 2000
NAME	2134 STEEL
FINISH	HONED
SIZE	16" X 4"
INSTALLATION	THINSET
GROUT	–

PL-1 PLASTIC LAMINATE – COUNTERS

MFR	NEVAMAR
PATTERN	LD-6-1T
COLOR	BLACK LODESTONE
FINISH	MATTE

PL-2 PLASTIC LAMINATE – CABINETS

MFR	NEVAMAR
PATTERN	SH-2-2T
COLOR	MAIZE SHIBORI
FINISH	MATTE

PL-3 PLASTIC LAMINATE – CABINETS

MFR	FORMICA
PATTERN	5904-43
COLOR	WILD CHERRY
FINISH	MATTE

PL-4 PLASTIC LAMINATE – TOILET PARTITIONS

MFR	NEVAMAR
PATTERN	TM-2-1T
COLOR	OCHRE TEMPERA
FINISH	MATTE

SS-1 SOLID SURFACE – COUNTER

MFR	CORIAN
COLOR	BLIZZARD
FINISH	MATTE/SATIN

SS-2 SOLID SURFACE – COUNTER

MFR	AVONITE
COLOR	SANDIA F1-9055
FINISH	SATIN

WC-1 WALLCOVERING (2)

MFR	MAHARAM
NUMBER	TEK-WALL 1000 300801
COLOR	208 MAIZE
WIDTH	54"

PREP GYP. SURFACE AS RECOMMENDED BY MANUFACTURER.

WT-1 WINDOW TREATMENT

MFR	LEVOLOR
STYLE	MARK I – RIVIERA
SIZE	1" HORIZONTAL MINI-BLINDS
COLOR	961 BRUSHED SILVER

WD-1 WOOD – DOORS/WALL PANELS/CHAIR RAIL

MFR	CUSTOM TO MATCH MARSHFIELD
TYPE	ROTARY CUT NATURAL BIRCH WITH AUTUMN 32-95 STAIN W.I.C. CERTIFIED
FINISH	CLEAR MATTE/SATIN LACQUER TOP COAT

CT-1 CERAMIC TILE – FIELD WALL/BASE

MFR	DAL TILE
STYLE NUMBER	X735
COLOR	ALMOND-MATTE
SIZE	4" X 4"
INSTALLATION	THIN SET
GROUT	TEC 931 STANDARD WHITE
NOTE	PROVIDE DEDUCT ALTERNATE FOR 6" X 6" TILE.

CT-2 CERAMIC TILE – ACCENT

MFR	DAL TILE
STYLE NUMBER	1469
COLOR	GALAXY-SEMI-GLOSS
SIZE	4" X 4"
INSTALLATION	THIN SET
GROUT	TEC 931 STANDARD WHITE
NOTE	PROVIDE DEDUCT ALTERNATE FOR 6" X 6" TILE.

CT-3 CERAMIC TILE – ACCENT

MFR	DAL TILE
STYLE NUMBER	0190
COLOR	ARCTIC WHITE-SEMI GLOSS
SIZE	4" X 4"
INSTALLATION	THIN SET
GROUT	TEC 931 STANDARD WHITE
NOTE	PROVIDE DEDUCT ALTERNATE FOR 6" X 6" TILE.

CT-4 CERAMIC TILE – FLOOR

MFR	DAL TILE
STYLE NUMBER	D037
COLOR	WHITE GRANITE
SIZE	2" X 2"
INSTALLATION	THIN SET
GROUT	TEC 927 LIGHT PEWTER

CT-5 CERAMIC TILE – FLOOR

MFR	DAL TILE
STYLE NUMBER	D326
COLOR	DAPPLE GRAY
SIZE	4" X 4"
INSTALLATION	THIN SET
GROUT	TEC 927 LIGHT PEWTER

NOTE: GENERAL NOTES FOR CERAMIC TILE:
PROVIDE ALL CORNER TRIM, BULLNOSE TOPS, COVE BASE, COVE BASE CORNERS AND BULL NOSE RUNNERS IN PRICING FOR INSTALLATION.

P-1 PAINT – FIELD

MFR	FRAZEE
COLOR NUMBER	501
COLOR NAME	SHELL WHITE
FINISH	EGGSHELL, U.N.O.
APPLICATION	2 COATS OVER ONE COAT PRIMER

P-2 PAINT – FIELD

MFR	ICI/DULUX
COLOR NUMBER	660-185
COLOR NAME	CORINTHIAN COLUMN
FINISH	EGGSHELL, U.N.O.
APPLICATION	2 COATS OVER ONE COAT PRIMER

P-3 PAINT – ACCENT

MFR	FRAZEE
COLOR NUMBER	8016N
COLOR NAME	DEEP WATERS
FINISH	EGGSHELL, U.N.O.
APPLICATION	2 COATS OVER ONE COAT PRIMER

P-4 PAINT – ACCENT

MFR	FRAZEE
COLOR NUMBER	8406N
COLOR NAME	RED JARRAH
FINISH	EGGSHELL, U.N.O.
APPLICATION	2 COATS OVER ONE COAT PRIMER

P-5 PAINT – ACCENT

MFR	FRAZEE
COLOR NUMBER	7745D
COLOR NAME	SPANISH GOLD
FINISH	EGGSHELL, U.N.O.
APPLICATION	2 COATS OVER ONE COAT PRIMER

P-6 PAINT – CEILING

MFR	FRZEE
COLOR NUMBER	CW003W
COLOR NAME	MYSTERIOUS
FINISH	FLAT, U.N.O.
APPLICATION	2 COATS OVER ONE COAT PRIMER

FINISH NOTES

GENERAL NOTES

1. REFER TO FINISH PLANS AND ELEVATIONS FOR LOCATIONS OF FINISHES.
2. WALLS TO BE P-1, EGGSHELL FINISH UNLESS OTHERWISE NOTED.
3. GYP. BOARD CEILINGS TO BE P-6; FLAT FINISH UNLESS NOTED OTHERWISE.
4. RESTROOM WALLS/CEILINGS TO BE SEMI-GLOSS PAINT FINISH.
5. FINISH AT ALL AIR DIFFUSERS, ACCESS PANELS, SPEAKERS, ETC. TO MATCH SURFACE THEY OCCUR ON.
6. INSTALL 6" COVE BASE IN ALL CORRIDORS AND PUBLIC LOBBY, ALL OTHER REMAINING SPACES TO HAVE 4" COVE RUBBER BASE UNLESS OTHERWISE NOTED.
7. REFER TO OTHER PLANS, ELEVATIONS, DETAILS, FOR FURTHER CLARIFICATION AND INFORMATION.
8. ALL PAINT GRADE DOOR FRAMES TO MATCH WESTERN INTEGRATED DOOR FRAME 400. CONTRACTOR TO PROVIDE SAMPLE FOR DESIGNER'S APPROVAL PRIOR TO INSTALLATION.
9. ALL GROUT JOINTS SHALL BE 1/8" U.N.O.
10. CONTRACTOR TO "FEATHER CONCRETE FLOOR, AS REQUIRED, TO ACCOMMODATE SMOOTH TRANSITION BETWEEN FLOOR FINISHES. PROVIDE MINIMUM 12'-0" FLOAT LENGTH FROM EDGE OF FLOORING MATERIAL TRANSITION. VERIFY LOCATIONS WITH ARCHITECT PRIOR TO FLOORING INSTALLATION. SEE DETAIL SHEETS.
11. WHERE DOOR OPENINGS OCCUR, CARPET SEAMING & FLOORING MATERIAL TRANSITIONS ARE TO BE CENTERED UNDERNEATH DOOR, UNLESS OTHERWISE NOTED.
12. CONTRACTOR TO PROVIDE CARPET SEAMING DIAGRAM FOR DESIGNER'S APPROVAL PRIOR TO INSTALLATION.
15. CONTRACTOR TO PROVIDE MOISTURE SEAL AT ALL FIRST FLOOR STONE LOCATIONS; IF MOISTURE TEST EXCEEDS THAT AS REQUIRED BY STONE/FLOORING MFG.. FLOORING CONTRACTOR TO TEST AND MAKE NECESSARY RECOMMENDATIONS.
16. CONTRACTOR TO PROVIDE SUBMITTAL SAMPLES OF ALL FINISHES FOR ARCHITECT'S AND DESIGNER'S APPROVAL PRIOR TO ORDER AND APPLICATION OR FABRICATION.
17. CONTRACTOR TO PATCH/FLOAT LT. WEIGHT CONCRETE FLOOR AND PREP FOR CARPETING INSTALLATION.
18. AT CERAMIC WALL TILE LOCATIONS, PROVIDE ALL APPROPRIATE TRIM PIECES. (I.E. INSIDE & OUTSIDE CORNERS, COVE, ETC.)
19. ALL WET LOCATIONS SHALL BE FINISHED IN SEMI-GLOSS PAINT, U.N.O.
20. PROVIDE A SLIP SHEET AT ALL STONE FLOORING, CERAMIC FLOOR TILE LOCATIONS WHERE REQUIRED TO PREVENT CRACKING DUE TO DEFLECTION OR UN-LEVEL AREAS.
21. CONTRACTOR TO PROVIDE A MINIMUM OF (2) COATS OF PAINT OVER (1) COAT OF PRIMER WITH THE THIRD COAT OF PAINT APPLIED AFTER INSTALLATION OF ALL OTHER CONSTRUCTION AND FINISH MATERIALS. (I.E. CARPETING, BASE, DOORS, ETC.)
22. WALL AND CEILING MATERIALS SHALL NOT EXCEED THE FLAME SPREAD CLASSIFICATION IN UBC TABLE 8-B.
23. NEW TOILET PARTITIONS AT ALL RESTROOMS TO BE PL-4. ALL TRIM/METAL SURFACES TO BE SATIN STAINLESS STEEL.
24. REFER TO DETAILS 3&4/A805 FOR FLOORING TRANSITION DETAILS; TYPICAL ALL LOCATIONS.
25. ALL ROOF DRAINS AND EXPOSED PIPES TO BE CLEANED THOROUGHLY AND PREPPED FOR HIGH-GLOSS PAINT FINISH. PAINT TO BE P-1, U.N.O..
26. ALL PLASTIC LAMINATE COUNTERTOPS TO BE PL-1, U.N.O.. ALL PLASTIC LAMINATE CABINETRY TO BE PL-2, U.N.O..
27. WHERE VCT 1 AND VCT 2 ARE SPECIFIED COLLECTIVELY INSTALL PATTERN EQUALLY RANDOM ,QUARTER-TURNED.
28. WHERE VCT 1-5 ARE SPECIFIED COLLECTIVELY, REFER TO SHEET NOTES ON FINISH PLANS FOR PATTERN.
29. PROVIDE WT-1 WINDOW TREATMENT AT ALL INTERIOR AND EXTERIOR WINDOWS THROUGHOUT FACILITY.

(2)

GLAZING

1. GENERAL CONTRACTOR TO SUBMIT SAMPLES OF EACH TYPE OF GLAZING FOR ARCHITECT'S APPROVAL.

DRYWALL NOTES

1. ALL GYPSUM BOARD TO HAVE SMOOTH LEVEL 4 TEXTURE FINISH UNLESS NOTED OTHERWISE.

WITH THIS PROJECT. NONE OF SUCH IDEAS, DESIGN, ARRANGEMENTS, OR PLANS SHALL BE USED BY, OR DISCLOSED TO ANY PERSON, FIRM, OR CORPORATION FOR ANY PURPOSE WHATSOEVER WITHOUT THE WRITTEN PERMISSION OF
CARRIER JOHNSON. FILING THESE DRAWINGS OR SPECIFICATIONS WITH ANY PUBLIC AGENCY IS NOT A PUBLICATION OF SAME. NO COPYING, REPRODUCTION OR USE THEREOF IS PERMISSIBLE WITHOUT THE CONSENT OF CARRIER JOHNSON.

ARCHITECTURE
INTERIOR DESIGN
PLANNING

CARRIER JOHNSON

GORDON R. CARRIER AIA
MICHAEL C. JOHNSON AIA

WILLIAM C. BOCKEN AIA
DEBORAH P. ELLIOTT IIDA

2600 MICHELSON DRIVE
SUITE 400
IRVINE, CALIFORNIA
92612

TEL 949 955-2353
FAX 949 955-2377

1301 THIRD AVENUE
SAN DIEGO, CALIFORNIA
92101

TEL 619 239-2353
FAX 619 239-6227

RECORD DOCUMENTS
THESE DOCUMENTS RELEASED BY CARRIER JOHNSON FOR USE AS RECORD DOCUMENTS WILL SHOW THE REPORTED LOCATION OF THE WORK AND SIGNIFICANT CHANGES MADE DURING THE CONSTRICTION PROCESS, AND ARE BASED ON UNVERIFIED INFORMATION PROVIDED BY THE CONTRACTOR AND OTHER PARTIES WHICH WILL BE ASSUMED RELIABLE. CARRIER JOHNSON CANNOT AND DOES NOT WARRANT THE ACCURACY AND/OR COMPLETENESS OF THIS INFORMATION AND SHALL NOT BE RESPONSIBLE FOR ANY ERRORS OR OMISSIONS WHICH MAY BE INCORPORATED THEREIN AS A RESULT. FUTURE CONSTRUCTION PLANNING MUST INCLUDE FIELD CONFIRMATION OF EXISTING CONDITIONS.

ONTARIO PD::
HEADQUARTERS
2534 S. ARCHIBALD AVE., ONTARIO, CALIFORNIA 91761

(F13) Field Order #13	07.01.03
(5) Addendum 5	04.21.2003
(3) Addendum 3	
(2) Addendum 2/Bldg. Dept. Re-Submittal	03.20.2003
Building Dept. Submittal	02.24.2003

ISSUES:

DIRECTORY/FILE NUMBER: 4511-A230

XREF'S DRAWINGS:

PROJECT NUMBER: 4511.00

DRAWN BY: CHECKED BY:

DATE: 2/24/03

SCALE:

TITLE: FINISH SPECIFICATIONS

DRAWING NO: A2.3.0

ALL IDEAS, DESIGN, ARRANGEMENTS AND PLANS INDICATED OR REPRESENTED BY THIS DRAWING ARE OWNED BY, AND THE PROPERTY OF CARRIER JOHNSON AND WERE CREATED, EVOLVED AND DEVELOPED FOR USE ON, AND IN CONNECTION WITH THIS PROJECT AND ARE NOT TO BE USED, IN WHOLE OR IN PART, FOR ANY OTHER PROJECT WITHOUT THE WRITTEN PERMISSION OF CARRIER JOHNSON. FILING THESE DRAWINGS OR SPECIFICATIONS WITH ANY PUBLIC AGENCY IS NOT A PUBLICATION OF SAME. NO COPYING, REPRODUCTION OR USE THEREOF IS PERMISSIBLE WITHOUT THE CONSENT OF CARRIER JOHNSON.

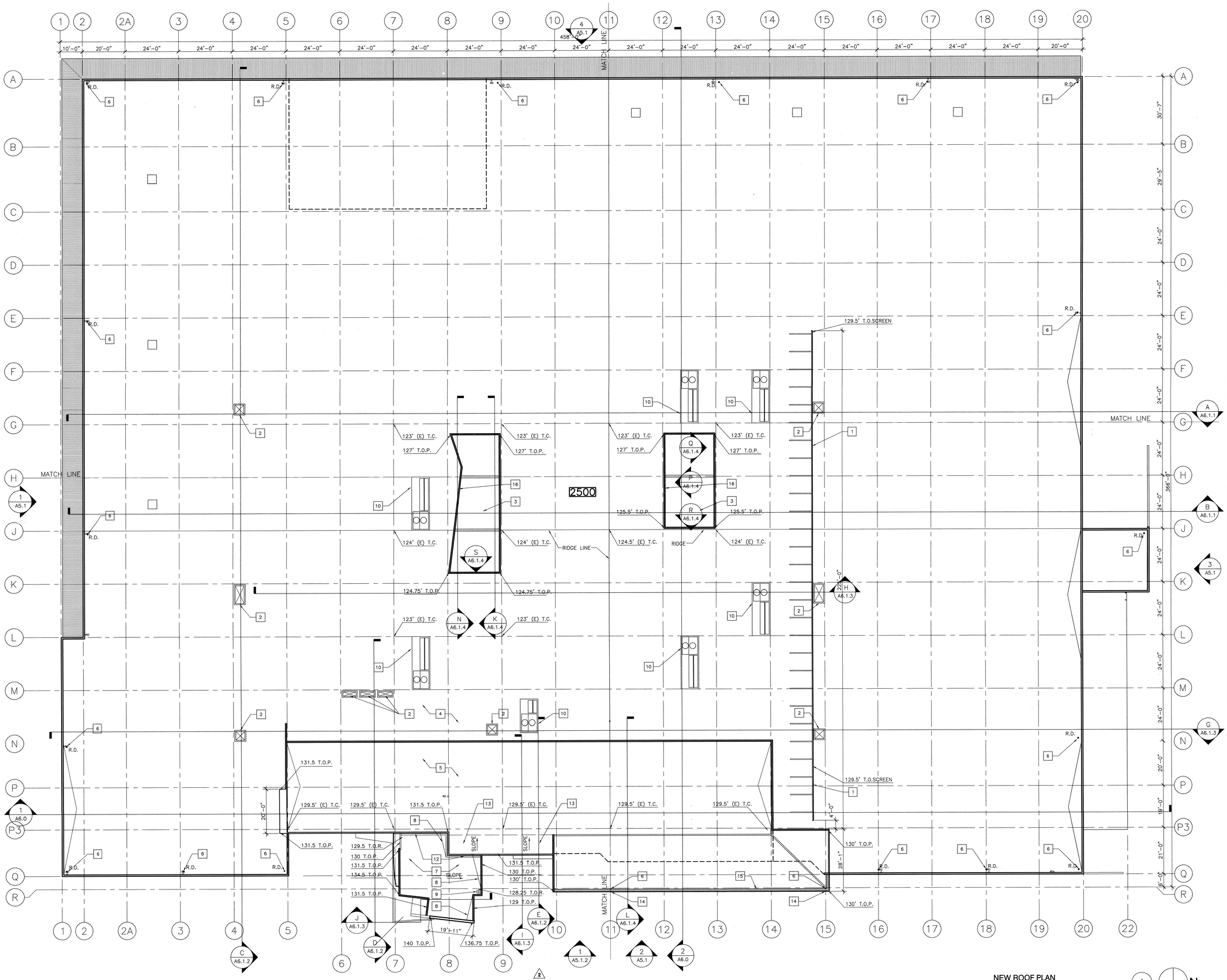

NEW ROOF PLAN
1/16"=1'-0"

KEY NOTES

1. EQUIPMENT SCREEN (21 / A8.1.1)
2. SKYLIGHT (11 / A8.1.1)
3. NEW COURTYARD OPENING
4. MAIN ROOF
5. HIGH ROOF
6. EXISTING DRAIN
7. NEW ROOF SYSTEM, SLOPE 3/8" PER FT.
8. NEW CRICKET
9. NEW DRAIN PER PLUMBING (6 / A8.1.1)
10. EXISTING MECHANICAL EQUIPMENT
11. NEW MECHANICAL EQUIPMENT PER MECHANICAL
12. NEW SYSMIC JOINT
13. NEW ROOF TO MATCH WITH SLOPE OF EXISTING ROOF
14. NEW SCUPPER OVERFLOW
15. EXISTING BUILT-IN GUTTER
16. NEW PARAPET
17.
18.
19.
20.
21.
22.
23.
24.
25.

GENERAL NOTES

1. ELEVATIONS GIVEN ARE BASED ON AN EXISTING FLOOR ELEVATION OF 100
2. COORDINATE LOCATION OF EQUIPMENT ROOF SCREEN SUPPORTS WITH STRUCTURAL.
3. COORDINATE LOCATION OF EQUIPMENT PADS AND CURBS WITH DEFFERRED MECHANICAL SUBMITTAL. (14 / A8.1.1)
4. PATCH AND REPAIR OR INSTAL NEW ROOFING WHERE REQUIRED FOR NEW SKYLIGHTS, ROOF SCREEN SUPPORTS, NEW PARAPETS, AREAS OF NEW ROOF, PIPING OR VENT PENETRATIONS, AND EQUIPMENT PADS OR CURBS FOR ROOF TOP EQUIPMENT.

CARRIER JOHNSON
ARCHITECTURE
INTERIOR DESIGN
PLANNING

GORDON R. CARRIER AIA
MICHAEL C. JOHNSON AIA

WILLIAM C. BOCKEN AIA
DEBORAH P. ELLIOTT IIDA

2600 MICHELSON DRIVE
SUITE 600
IRVINE, CALIFORNIA
92612

TEL 949 955-2353
FAX 949 955-2377

1301 THIRD AVENUE
SAN DIEGO, CALIFORNIA
92101

TEL 619 239-2353
FAX 619 239-6227

RECORD DOCUMENTS
THESE DOCUMENTS RELEASED BY CARRIER JOHNSON FOR USE AS RECORD DOCUMENTS WILL SHOW THE REPORTED LOCATION OF THE WORK AS INSTALLED AND NOTED BY THE CONTRACTOR DURING THE CONSTRUCTION PROCESS, AND ARE BASED ON UNVERIFIED INFORMATION PROVIDED BY THE CONTRACTOR AND OTHERS. THE INFORMATION SHOWN MAY BE INCOMPLETE AND CARRIER JOHNSON CANNOT AND DOES NOT WARRANT THE ACCURACY AND/OR COMPLETENESS OF THIS INFORMATION AND SHALL NOT BE RESPONSIBLE FOR ANY ERRORS OR OMISSIONS WHICH MAY BE CONTAINED IN THESE AS A RESULT. FUTURE CONSTRUCTION PLANNING MUST INCLUDE FIELD CONFIRMATION OF EXISTING CONDITIONS.

ONTARIO PD:: HEADQUARTERS

2534 S. ARCHIBALD AVE., ONTARIO, CALIFORNIA 91761

13 Field Order #13 07.01.03
5 Addendum 5 04.21.2003
3 Addendum 3
2 Addendum 2/Bldg. Dept. Re-Submittal 03.20.2003
Building Dept. Submittal 02.24.2003
ISSUES:

DIRECTORY/FILE NUMBER: 4511-A240
XREF'S DRAWINGS:
PROJECT NUMBER: 4511.00
DRAWN BY: CHECKED BY:
DATE: 1/23/03
SCALE: AS NOTED
TITLE: NEW ROOF PLAN

DRAWING NO: A2.4.0

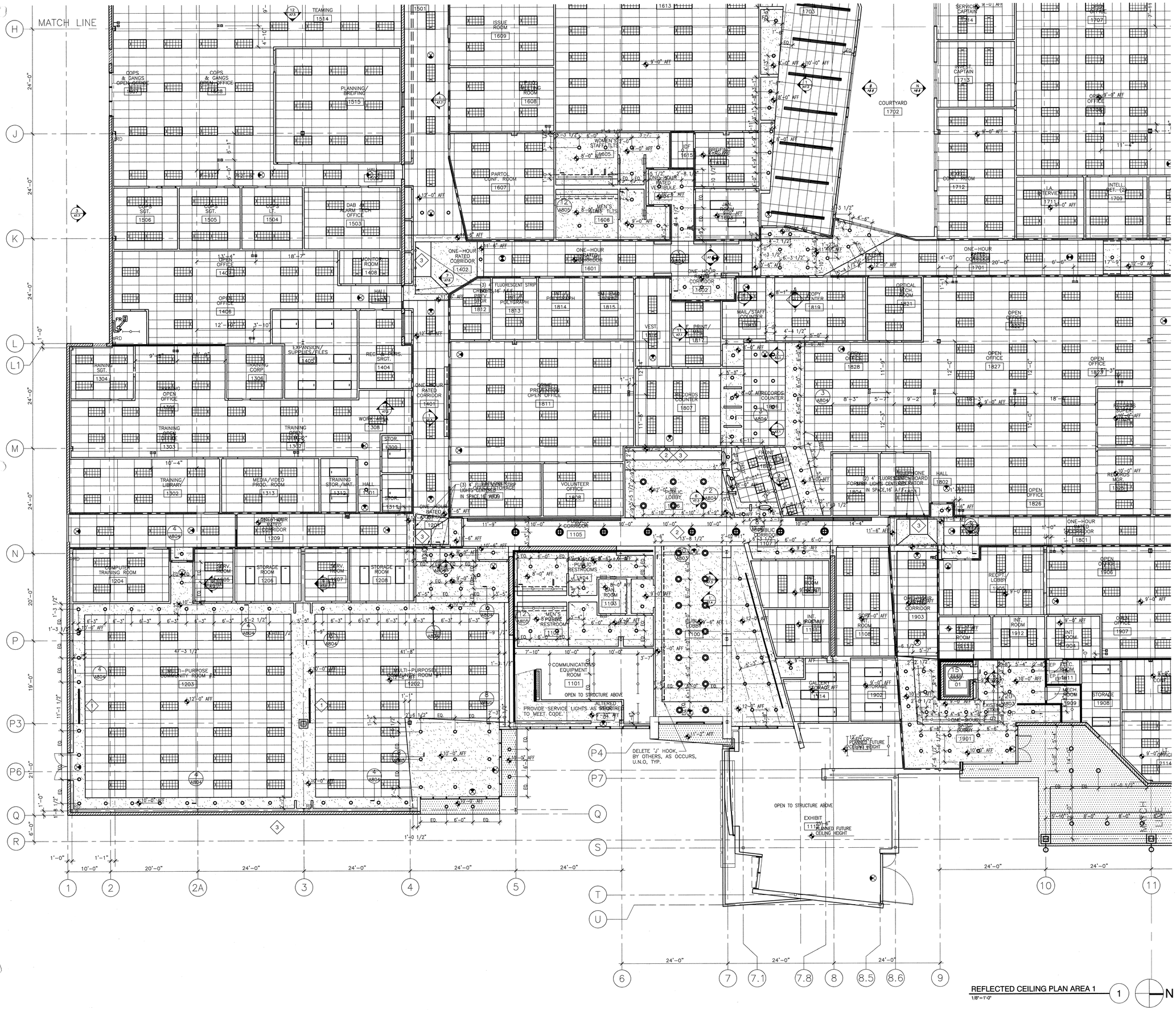

REFLECTED CEILING PLAN AREA 1
1/8"=1'-0"

N

RCP LEGEND

SYMBOL	DESCRIPTION
	EXISTING SPACE NOT IN CONTRACT
	OPEN TO STRUCTURE
	DIRECT & INDIRECT LINEAR LIGHTS
	CEILING GRID
	DRYWALL CEILING, SOFFIT; PAINTED P-6, FLAT FINISH U.N.O.
	2'x2' / 2'x4' FLUORESCENT RECESSED LIGHT FIXTURE-PARABOLIC LENSE
	2'x2' / 2'x4' FLUORESCENT RECESSED LIGHT FIXTURE-PRISMATIC LENS
	RECESSED FLUORESCENT DOWNLIGHT
	CEILING/DECK MOUNT PENDANT FIXTURE
	CELING MOUNTED LINEAR FIXTURE
	WALL MOUNTED DIRECT/INDIRECT LINEAR FIXTURE-CENTER OF FIXTURE 9'-0" A.F.F.
	CELING AND CABLE MOUNTED DIRECT/INDIRECT LINEAR FIXTURE
	COVE LIGHTING
	AIR SUPPLY GRILL
	RETURN AIR GRILL
	LINEAR AIR DIFFUSER
	EXIT SIGN - EDGE LITE
SD	SMOKE DETECTOR

RCP KEY NOTES

1. 12'-0" WIDE X 8'-0" HIGH ELECTRONIC PROJECTION SCREEN, RE: SPECIFICATIONS/DETAILS
2. PAINT EXPOSED STRUCTURE, PIPES AND DECK ABOVE P-6. METAL TO BE SEMIGLOSS FINISH, GYP TO BE FLAT FINISH REMOVE ANY ABANDONED CONSTRUCTION MATERIALS AND CLEAN EXISTING SURFACES THOROUGHLY.
3. PATCH/REPAIR AS REQUIRED NEW SKYLIGHT; REFER TO ROOF PLAN AND DETAILS

GENERAL RCP NOTES

1. CEILING HEIGHTS ARE 9'-0" AFF OR AS NOTED ON PLAN.
2. PROVIDE SINGLE COVER PLATES FOR MULTIPLE GANG SWITCHES, TYPICAL THROUGHOUT REFERENCE ENGINEERS DRAWINGS FOR ROCKER SWITCH AND SPECIFICATIONS. COLOR SHALL BE WHITE U.N.O.
3. PROVIDE RATED CONSTRUCTION AROUND ALL DUCTWORK AND CONDUITS PENETRATING ONE HOUR CONSTRUCTION.
4. GC TO NOTIFY ARCHITECT WHERE ACCESS PANELS ARE REQD TO MEET CODE AND SERVICE MEP EQUIP PRIOR TO INSTALLATION OF SUCH EQUIPMENT. ARCHITECT TO APPROVE ALL ACCESS PANEL LOCATIONS PRIOR TO INSTALLATION. EQUIPMENT REQUIRING ACCESS SHALL BE LOCATED ABOVE SUSP. CLNG WHERE EVER POSSIBLE TO AVOID ACCESS PANELS IN GYP. BD. CEILINGS. PROVIDE FLUSH MNTD. GYP. BD. FACED ACCESS PANEL WITH MUD RING. SUBMIT CUT-SHEET TO ARCH. FOR APPROVAL PRIOR TO ORDER AND INSTALLATION.
5. LOCATION OF ACCENT LIGHTS TO BE FIELD LOCATED BY ARCH. SPACED EQUALLY, TYPICAL.
6. FOR TYPICAL SUSP. CLNG. ASSEMBLY DETAILS, CLEARANCES & INSTALLATION NOTES REFER TO DETAILS
7. FIELD VERIFY ALL ACCESS DOORS WITH ARCHITECT, PRIOR TO INSTALLATION. ALL ACCESS DOORS TO BE WILLIAMS BROS. CORP.; #WB-ROW ACCESS DOOR RECESSED FOR DRYWALL SURFACES (OR APPROVED EQUAL)
8. GENERAL NOTE: ALL CEILING MOUNTED DEVICES (I.E., SMOKE DETECTORS, SPRINKLER HEADS, SECURITY, EXIT SIGNS, ETC.) TO BE ALIGNED W/ LIGHTING FIXTURES (CENTER LINE OF EACH)
9. PROVIDE LINEAR AIR DIFFUSERS AT ALL HARD LID CLNG AREAS - EXPOSED TRIM TO MATCH ADJACENT CEILING COLOR.
10. ALL EXIT SIGNS SHALL BE CONNECT TO AN EMERGENCY ELECT. POWER SYSTEM OR AN APPRVD SELF-LUMINOUS SYSTEM THAT PROVIDES CONT. ILLUMINATION INDEPENDENT OF THE EXTERNAL POWER SOURCE TO ENSURE THAT THE EXIT SIGNS ARE ILLUMINATED AT ALL TIMES.
11. ANY TIME A BUILDING IS OCCUPIED, THE MEANS OF EGRESS SHALL BE ILLUMINATED. PROVIDE EXIT ILLUMINATION THAT HAS A MIN. INTENSITY OF NOT LESS THAN 1 FOOT CANDLE AT THE FLOOR LEVEL. POWER FOR THE MEANS OF EGRESS ILLUMINATION SHALL BE PROVIDED BY THE PREMISES ELECTRICAL SUPPLY. WHEN THE OCCUPANT LOAD EXCEEDS 100, EMERGENCY POWER SHALL BE PROVIDED.
12. ANY LIGHTING SUBSTITUTIONS MUST MEET PHOTO METRIC REQMNTS AND BE APPROVED BY ARCHITECT; PRIOR TO BID.
13. REFER TO FINISH NOTES FOR ADDITION INFORMATION.
14. LIGHT FIXTURE(S) TO BE LOCATED CENTERED, EQUALLY SPACED, BOTH DIRECTIONS, WHERE NO DIMENSIONS ARE PROVIDED.
15. VERIFY CONDITION OF FIXTURE AND LAMP ON EXISTING FIXTURES THAT ARE TO REMAIN. PATCH, REPAIR OR REPLACE AS REQUIRED.
16. SEE MECHANICAL DRAWINGS FOR LOCATIONS OF AIR REGISTERS. 5

KEY PLAN

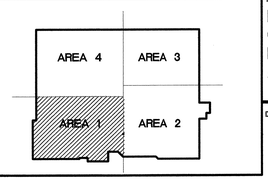

ARCHITECTURE
INTERIOR DESIGN
PLANNING

CARRIER JOHNSON

GORDON R. CARRIER AIA
MICHAEL C. JOHNSON AIA

WILLIAM C. BOCKEN AIA
DEBORAH P. ELLIOTT IIDA

2600 MICHELSON DRIVE
SUITE 400
IRVINE, CALIFORNIA
92612

TEL 949 955-2353
FAX 949 955-2377

1301 THIRD AVENUE
SAN DIEGO, CALIFORNIA
92101

TEL 619 239-2353
FAX 619 239-6227

RECORD DOCUMENTS
THESE AS RECORD DRAWINGS WILL SHOW THE PERCEIVED LOCATION OF THE WORK AND SIGNIFICANT CHANGES MADE DURING THE CONSTRUCTION PROCESS. THE CONTRACTOR IS RESPONSIBLE FOR THE ACCURACY AND COMPLETENESS OF THESE AS RECORD DRAWINGS. CARRIER JOHNSON CANNOT AND DOES NOT WARRANT THE ACCURACY OF THE INFORMATION SHOWN ON THESE DRAWINGS AND SHALL NOT BE RESPONSIBLE FOR ANY ERRORS OR OMISSIONS WHICH MAY BE INCORPORATED THEREIN AS A RESULT OF INACCURATE OR INCOMPLETE INFORMATION FURNISHED FOR FIELD CONFIRMATION OF EXISTING CONDITIONS.

ONTARIO PD:: HEADQUARTERS
2534 S. ARCHIBALD AVE., ONTARIO, CALIFORNIA 91761

3 Field Order #13 07.01.03
2 Addendum 5 04.21.2003
1 Addendum 3
Addendum 2/Bldg. Dept. Re-Submittal 03.20.2003
Building Dept. Submittal 02.24.2003
ISSUES:

DIRECTORY/FILE NUMBER: 4511-A311-REVISE
XREFS DRAWINGS:
PROJECT NUMBER: 4511.00
DRAWN BY: CHECKED BY:
DATE: 08.20.03
SCALE: 1/8" = 1'-0"
TITLE: REFLECTED CEILING PLAN FIRST LEVEL AREA 1

DRAWING NO: A3.1.1R

ALL IDEAS, DESIGN, ARRANGEMENTS, OR PLANS SHALL BE USED BY, OR DISCLOSED TO ANY PERSON, FIRM, OR CORPORATION FOR ANY PURPOSE WHATSOEVER WITHOUT THE WRITTEN PERMISSION OF CARRIER JOHNSON. FILING THESE DRAWINGS OR SPECIFICATIONS WITH ANY PUBLIC AGENCY IS NOT A PUBLICATION OF SAME. NO COPYING, REPRODUCTION OR USE THEREOF IS PERMISSIBLE WITHOUT THE CONSENT OF CARRIER JOHNSON, WITH THIS PROJECT. NONE OF SUCH IDEAS, DESIGN, ARRANGEMENTS, OR PLANS SHALL BE USED BY, OR DISCLOSED TO ANY PERSON, FIRM, OR CORPORATION FOR ANY PURPOSE WHATSOEVER WITHOUT THE WRITTEN PERMISSION OF CARRIER JOHNSON. NO COPYING, REPRODUCTION OR USE THEREOF IS PERMISSIBLE WITHOUT THE CONSENT OF CARRIER JOHNSON. A PUBLICATION OF SAME IS NOT A PUBLICATION

ALL IDEAS, DESIGN, ARRANGEMENTS AND PLANS INDICATED OR REPRESENTED BY THIS DRAWING ARE OWNED BY, AND THE PROPERTY OF CARRIER JOHNSON AND WERE CREATED, EVOLVED AND DEVELOPED FOR USE ON, AND IN CONNECTION WITH THE SPECIFIED PROJECT. NONE OF SUCH IDEAS, DESIGNS, ARRANGEMENTS OR PLANS SHALL BE USED BY OR DISCLOSED TO ANY PERSON, FIRM OR CORPORATION FOR ANY PURPOSE WHATSOEVER, EXCEPT BY WRITTEN AGREEMENT WITH CARRIER JOHNSON. FILING THESE DRAWINGS OR SPECIFICATIONS WITH ANY PUBLIC AGENCY IS NOT A PUBLICATION OF SAME. NO COPYING, REPRODUCTION OR USE THEREOF IS PERMISSIBLE WITHOUT THE CONSENT OF CARRIER JOHNSON.

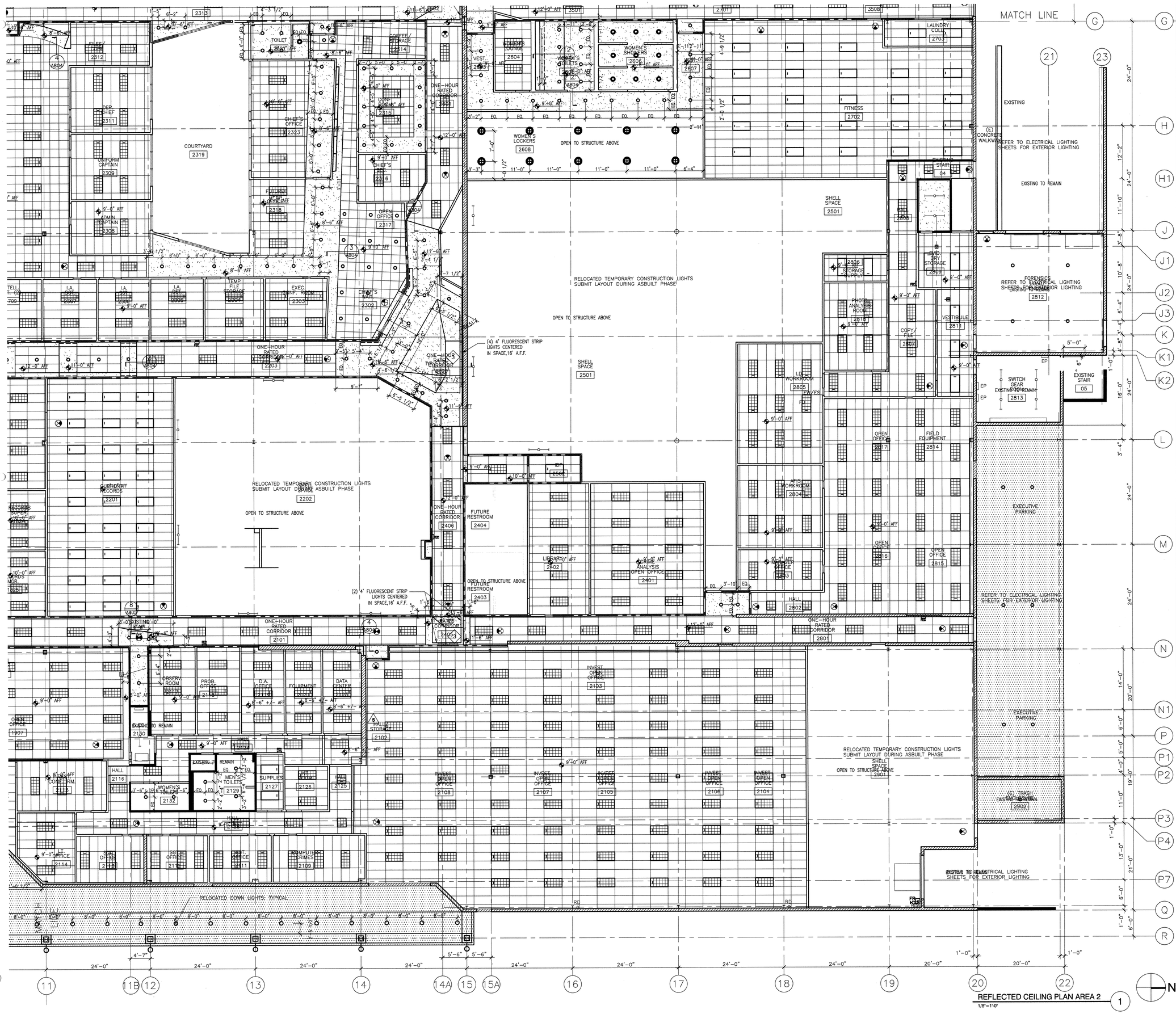

REFLECTED CEILING PLAN AREA 2 — 1/8"=1'-0"

RCP LEGEND

SYMBOL	DESCRIPTION
	EXISTING SPACE NOT IN CONTRACT
	OPEN TO STRUCTURE
	DIRECT & INDIRECT LINEAR LIGHTS
	CEILING GRID
	DRYWALL CEILING, SOFFIT; PAINTED P-6, FLAT FINISH U.N.O.
	2'x2' / 2'x4' FLUORESCENT RECESSED LIGHT FIXTURE-PARABOLIC LENSE
1	2'x2' / 2'x4' FLUORESCENT RECESSED LIGHT FIXTURE-PRISMATIC LENS
	RECESSED FLUORESCENT DOWNLIGHT
	CEILING/DECK MOUNT PENDANT FIXTURE
	CELING MOUNTED LINEAR FIXTURE
	WALL MOUNTED DIRECT/INDIRECT LINEAR FIXTURE-CENTER OF FIXTURE 9'-0" A.F.F.
	CELING AND CABLE MOUNTED DIRECT/INDIRECT LINEAR FIXTURE
	COVE LIGHTING
	AIR SUPPLY GRILL
	RETURN AIR GRILL
	LINEAR AIR DIFFUSER
	EXIT SIGN - EDGE LITE
SD	SMOKE DETECTOR

RCP KEY NOTES

1. 12'-0" WIDE X 8'-0" HIGH ELECTRONIC PROJECTION SCREEN, RE: SPECIFICATIONS/DETAILS
2. PAINT EXPOSED STRUCTURE, PIPES AND DECK ABOVE P-6. METAL TO BE SEMIGLOSS FINISH, GYP TO BE FLAT FINISH REMOVE ANY ABANDONED CONSTRUCTION MATERIALS AND CLEAN EXISTING SURFACES THOROUGHLY.
3. PATCH/REPAIR AS REQUIRED NEW SKYLIGHT; REFER TO ROOF PLAN AND DETAILS

GENERAL RCP NOTES

1. CEILING HEIGHTS ARE 9'-0" AFF OR AS NOTED ON PLAN.
2. PROVIDE SINGLE COVER PLATES FOR MULTIPLE GANG SWITCHES, TYPICAL THROUGHOUT. REFERENCE ENGINEERS DRAWINGS FOR ROCKER SWITCH AND SPECIFICATIONS. COLOR SHALL BE WHITE U.N.O.
3. PROVIDE RATED CONSTRUCTION AROUND ALL DUCTWORK AND CONDUITS PENETRATING ONE HOUR CONSTRUCTION.
4. GC TO NOTIFY ARCHITECT WHERE ACCESS PANELS ARE REQD TO MEET CODE AND SERVICE MEP EQUIP PRIOR TO INSTALLATION OF SUCH EQUIPMENT. ARCHITECT TO APPROVE ALL ACCESS PANEL LOCATIONS PRIOR TO INSTALLATION. EQUIPMENT REQUIRING ACCESS SHALL BE LOCATED ABOVE SUSP. CLNG WHERE EVER POSSIBLE TO AVOID ACCESS PANELS IN GYP. BD. CEILINGS. PROVIDE FLUSH MNTD. GYP. BD. FACED ACCESS PANEL WITH MUD RING. SUBMIT CUT-SHEET TO ARCH. FOR APPROVAL PRIOR TO ORDER AND INSTALLATION.
5. LOCATION OF ACCENT LIGHTS TO BE FIELD LOCATED BY ARCH. SPACED EQUALLY, TYPICAL.
6. FOR TYPICAL SUSP. CLNG. ASSEMBLY DETAILS, CLEARANCES & INSTALLATION NOTES REFER TO DETAILS
7. FIELD VERIFY ALL ACCESS DOORS WITH ARCHITECT, PRIOR TO INSTALLATION. ALL ACCESS DOORS TO BE WILLIAMS BROS. CORP.; #WB-ROW ACCESS DOOR RECESSED FOR DRYWALL SURFACES (OR APPROVED EQUAL)
8. GENERAL NOTE: ALL CEILING MOUNTED DEVICES (I.E., SMOKE DETECTORS, SPRINKLER HEADS, SECURITY, EXIT SIGNS, ETC.) TO BE ALIGNED W/ LIGHTING FIXTURES (CENTER LINE OF EACH)
9. PROVIDE LINEAR AIR DIFFUSERS AT ALL HARD LID CLNG AREAS - EXPOSED TRM TO MATCH ADJACENT CEILING COLOR.
10. ALL EXIT SIGNS SHALL BE CONNECT TO AN EMERGENCY ELECT. POWER SYSTEM OR AN APPRVD SELF-LUMINOUS SYSTEM THAT PROVIDES CONT. ILLUMINATION INDEPENDENT OF THE EXTERNAL POWER SOURCE TO ENSURE THAT THE EXIT SIGNS ARE ILLUMINATED AT ALL TIMES.
11. ANY TIME A BUILDING IS OCCUPIED, THE MEANS OF EGRESS SHALL BE ILLUMINATED. PROVIDE EXIT ILLUMINATION THAT HAS A MIN. INTENSITY OF NOT LESS THAN 1 FOOT CANDLE AT THE FLOOR LEVEL. POWER FOR THE MEANS OF EGRESS ILLUMINATION SHALL BE PROVIDED BY THE PREMISES ELECTRICAL SUPPLY. WHEN THE OCCUPANT LOAD EXCEEDS 100, EMERGENCY POWER SHALL BE PROVIDED.
12. ANY LIGHTING SUBSTITUTIONS MUST MEET PHOTO METRIC REQMNTS AND BE APPROVED BY ARCHITECT; PRIOR TO BID.
13. REFER TO FINISH NOTES FOR ADDITION INFORMATION.
14. LIGHT FIXTURE(S) TO BE LOCATED CENTERED, EQUALLY SPACED, BOTH DIRECTIONS, WHERE NO DIMENSIONS ARE PROVIDED.
15. VERIFY CONDITION OF FIXTURE AND LAMP ON EXISTING FIXTURES THAT ARE TO REMAIN. PATCH, REPAIR OR REPLACE AS REQUIRED.
16. SEE MECHANICAL DRAWINGS FOR LOCATIONS OF AIR REGISTERS.

KEY PLAN

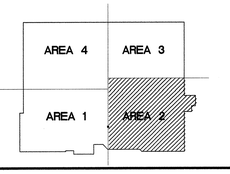

CARRIER JOHNSON
ARCHITECTURE
INTERIOR DESIGN
PLANNING
GORDON R. CARRIER AIA
MICHAEL C. JOHNSON AIA
WILLIAM C. BOCKEN AIA
DEBORAH P. ELLIOTT IIDA
2600 MICHELSON DRIVE SUITE 400 IRVINE, CALIFORNIA 92612
TEL 949 955-2353 FAX 949 955-2377
1301 THIRD AVENUE SAN DIEGO, CALIFORNIA 92101
TEL 619 239-2353 FAX 619 239-6227

RECORD DOCUMENTS

THESE DOCUMENTS RELEASED BY CARRIER JOHNSON FOR USE IN CONSTRUCTION ARE BASED ON EXISTING BUILDING LOCATION OF THE WORK, AND SIGNIFICANT CHANGES MADE DURING THE CONSTRUCTION PROCESS, AND ARE BASED ON UNVERIFIED INFORMATION PROVIDED BY THE CONTRACTOR AND/OR OTHERS. THE INFORMATION AS PROVIDED BY CARRIER JOHNSON CANNOT AND DOES NOT WARRANT THE ACCURACY AND/OR COMPLETENESS OF THE INFORMATION AS PROVIDED BY THE CONTRACTOR AND/OR OTHERS. ANY OMISSIONS WHICH MAY BE INCORPORATED THEREIN AS A RESULT. FUTURE CONSTRUCTION PLANNING MUST INCLUDE FIELD CONFIRMATION OF EXISTING CONDITIONS.

ONTARIO PD:: HEADQUARTERS

2534 S. ARCHIBALD AVE., ONTARIO, CALIFORNIA 91761

Field Order #13 07.01.03
5 Addendum 5 04.21.2003
3 Addendum 3
2 Addendum 2/Bldg. Dept. Re-Submittal 03.20.2003
Building Dept. Submittal 02.24.2003
ISSUES:
DIRECTORY/FILE NUMBER: 4511-A312revisedC

XREF'S DRAWINGS:

PROJECT NUMBER: 4511.00
DRAWN BY: CHECKED BY:

DATE: 082003
SCALE: 1/8" = 1'-0"
TITLE: REFLECTED CEILING PLAN FIRST LEVEL AREA 2

DRAWING NO: A3.1.2R

ALL IDEAS, DESIGN ARRANGEMENTS AND PLANS INDICATED OR REPRESENTED BY THIS DRAWING ARE OWNED BY AND ARE THE PROPERTY OF CARRIER JOHNSON AND SHALL NOT BE USED BY OR DISCLOSED TO ANY PERSON, FIRM OR CORPORATION FOR ANY PURPOSE WHATSOEVER WITHOUT THE WRITTEN PERMISSION OF CARRIER JOHNSON. FILING THESE DRAWINGS OR SPECIFICATIONS WITH ANY PUBLIC AGENCY IS NOT A PUBLICATION OF SAME. NO COPYING, REPRODUCTION OR USE THEREOF IS PERMISSIBLE WITHOUT THE CONSENT OF CARRIER JOHNSON.

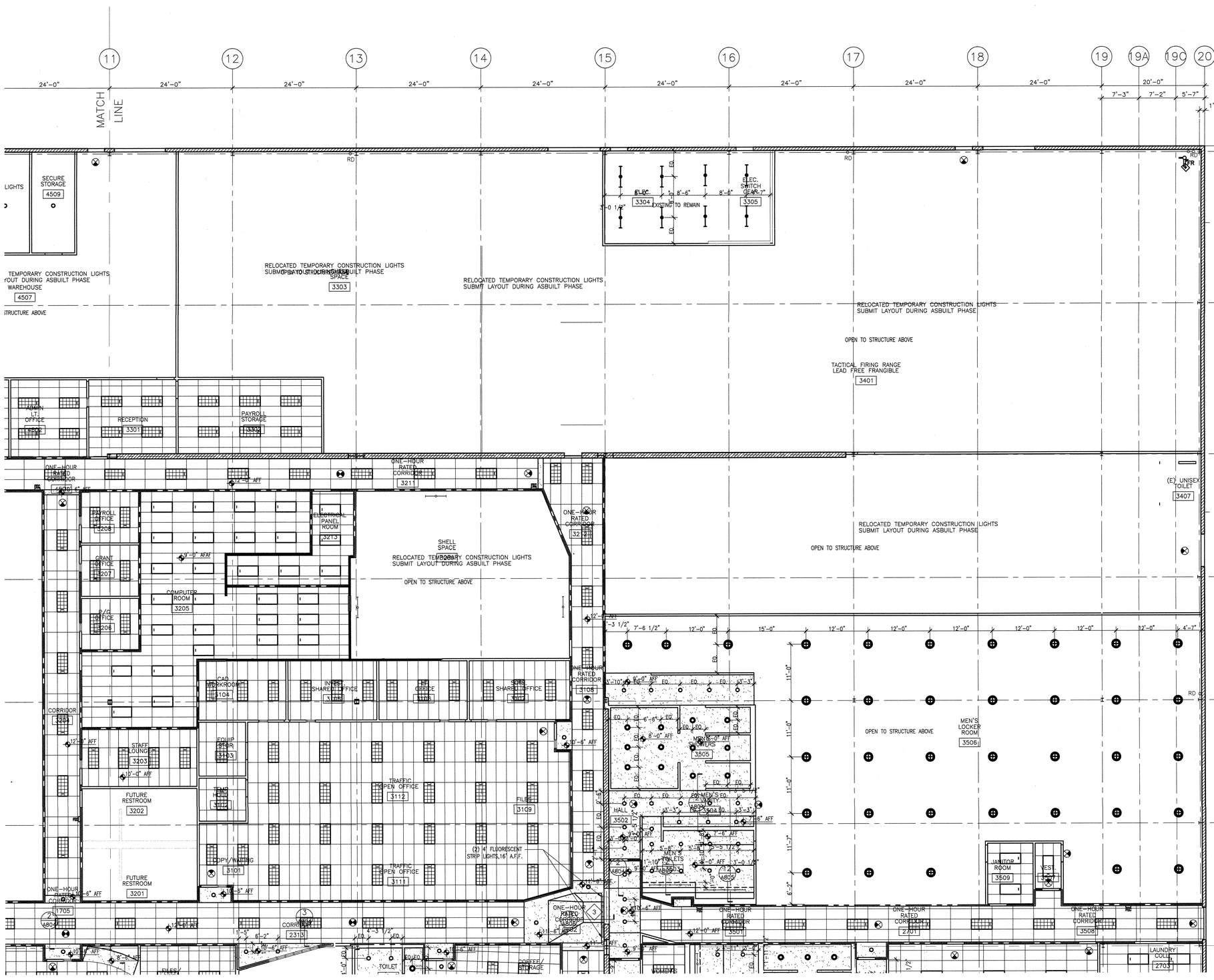

REFLECTED CEILING PLAN AREA 3
1/8"=1'-0"

RCP LEGEND

SYMBOL	DESCRIPTION
	EXISTING SPACE NOT IN CONTRACT
	OPEN TO STRUCTURE
	DIRECT & INDIRECT LINEAR LIGHTS
	CEILING GRID
	DRYWALL CEILING, SOFFIT; PAINTED P-6, FLAT FINISH U.N.O.
	2'x2' / 2'x4' FLUORESCENT RECESSED LIGHT FIXTURE-PARABOLIC LENSE
	2'x2' / 2'x4' FLUORESCENT RECESSED LIGHT FIXTURE-PRISMATIC LENS
	RECESSED FLUORESCENT DOWNLIGHT
	CEILING/DECK MOUNT PENDANT FIXTURE
	CELING MOUNTED LINEAR FIXTURE
	WALL MOUNTED DIRECT/INDIRECT LINEAR FIXTURE-CENTER OF FIXTURE 9'-0" A.F.F.
	CELING AND CABLE MOUNTED DIRECT/INDIRECT LINEAR FIXTURE
	COVE LIGHTING
	AIR SUPPLY GRILL
	RETURN AIR GRILL
	LINEAR AIR DIFFUSER
	EXIT SIGN - EDGE LITE
SD	SMOKE DETECTOR

RCP KEY NOTES

1. 12'-0" WIDE X 8'-0" HIGH ELECTRONIC PROJECTION SCREEN, RE: SPECIFICATIONS/DETAILS
2. PAINT EXPOSED STRUCTURE, PIPES AND DECK ABOVE P-6. METAL TO BE SEMIGLOSS FINISH, GYP TO BE FLAT FINISH REMOVE ANY ABANDONED CONSTRUCTION MATERIALS AND CLEAN EXISTING SURFACES THOROUGHLY.
3. PATCH/REPAIR AS REQUIRED NEW SKYLIGHT; REFER TO ROOF PLAN AND DETAILS

GENERAL RCP NOTES

1. CEILING HEIGHTS ARE 9'-0" AFF OR AS NOTED ON PLAN.
2. PROVIDE SINGLE COVER PLATES FOR MULTIPLE GANG SWITCHES, TYPICAL THROUGHOUT REFERENCE ENGINEERS DRAWINGS FOR ROCKER SWITCH AND SPECIFICATIONS. COLOR SHALL BE WHITE U.N.O.
3. PROVIDE RATED CONSTRUCTION AROUND ALL DUCTWORK AND CONDUITS PENETRATING ONE HOUR CONSTRUCTION.
4. GC TO NOTIFY ARCHITECT WHERE ACCESS PANELS ARE REQD TO MEET CODE AND SERVICE MEP EQUIP PRIOR TO INSTALLATION OF SUCH EQUIPMENT. ARCHITECT TO APPROVE ALL ACCESS PANEL LOCATIONS PRIOR TO INSTALLATION. EQUIPMENT REQUIRING ACCESS SHALL BE LOCATED ABOVE SUSP. CLNG WHERE EVER POSSIBLE TO AVOID ACCESS PANELS IN GYP. BD. CEILINGS. PROVIDE FLUSH MNTD. GYP. BD. FACED ACCESS PANEL WITH MUD RING. SUBMIT CUT-SHEET TO ARCH. FOR APPROVAL PRIOR TO ORDER AND INSTALLATION.
5. LOCATION OF ACCENT LIGHTS TO BE FIELD LOCATED BY ARCH. SPACED EQUALLY, TYPICAL.
6. FOR TYPICAL SUSP. CLNG. ASSEMBLY DETAILS, CLEARANCES & INSTALLATION NOTES REFER TO DETAILS
7. FIELD VERIFY ALL ACCESS DOORS WITH ARCHITECT, PRIOR TO INSTALLATION. ALL ACCESS DOORS TO BE WILLIAMS BROS. CORP.; #WB-ROW ACCESS DOOR RECESSED FOR DRYWALL SURFACES (OR APPROVED EQUAL)
8. GENERAL NOTE: ALL CEILING MOUNTED DEVICES (I.E., SMOKE DETECTORS, SPRINKLER HEADS, SECURITY, EXIT SIGNS, ETC.) TO BE ALIGNED W/ LIGHTING FIXTURES (CENTER LINE OF EACH)
9. PROVIDE LINEAR AIR DIFFUSERS AT ALL HARD LID CLNG AREAS - EXPOSED TRM TO MATCH ADJACENT CEILING COLOR.
10. ALL EXIT SIGNS SHALL BE CONNECT TO AN EMERGENCY ELECT. POWER SYSTEM OR AN APPRVD SELF-LUMINOUS SYSTEM THAT PROVIDES CONT. ILLUMINATION INDEPENDENT OF THE EXTERNAL POWER SOURCE TO ENSURE THAT THE EXIT SIGNS ARE ILLUMINATED AT ALL TIMES.
11. ANY TIME A BUILDING IS OCCUPIED, THE MEANS OF EGRESS SHALL BE ILLUMINATED. PROVIDE EXIT ILLUMINATION THAT HAS A MIN. INTENSITY OF NOT LESS THAN 1 FOOT CANDLE AT THE FLOOR LEVEL. POWER FOR THE MEANS OF EGRESS ILLUMINATION SHALL BE PROVIDED BY THE PREMISES ELECTRICAL SUPPLY. WHEN THE OCCUPANT LOAD EXCEEDS 100, EMERGENCY POWER SHALL BE PROVIDED.
12. ANY LIGHTING SUBSTITUTIONS MUST MEET PHOTO METRIC REQMNTS AND BE APPROVED BY ARCHITECT; PRIOR TO BID.
13. REFER TO FINISH NOTES FOR ADDITION INFORMATION.
14. LIGHT FIXTURE(S) TO BE LOCATED CENTERED, EQUALLY SPACED, BOTH DIRECTIONS, WHERE NO DIMENSIONS ARE PROVIDED.
15. VERIFY CONDITION OF FIXTURE AND LAMP ON EXISTING FIXTURES THAT ARE TO REMAIN. PATCH, REPAIR OR REPLACE AS REQUIRED.
16. SEE MECHANICAL DRAWINGS FOR LOCATIONS OF AIR REGISTERS. 5

KEY PLAN

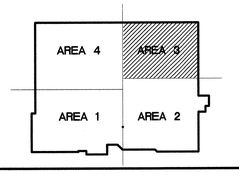

CARRIER JOHNSON
ARCHITECTURE
INTERIOR DESIGN
PLANNING
GORDON R. CARRIER AIA
MICHAEL C. JOHNSON AIA
WILLIAM C. BOCKEN AIA
DEBORAH P. ELLIOTT IIDA
2600 MICHELSON DRIVE
SUITE 400
IRVINE, CALIFORNIA
92612
TEL 949 955-2353
FAX 949 955-2377
1301 THIRD AVENUE
SAN DIEGO, CALIFORNIA
92101
TEL 619 239-2353
FAX 619 239-6227

RECORD DOCUMENTS
THESE DOCUMENTS REFLECT THE WORK AS CONSTRUCTED. THE INFORMATION ON THESE DOCUMENTS RELATIVE TO THE WORK WAS SHOWN AS SUPPLIED TO CARRIER JOHNSON BY THE CONTRACTOR. CARRIER JOHNSON HAS NOT VERIFIED THE LOCATION OF THE WORK AND SIGNIFICANT CHANGES MADE DURING THE CONSTRUCTION PROCESS, AND ARE BASED ON INFORMATION PROVIDED BY THE CONTRACTOR AND OTHER PARTIES AND SHALL NOT BE ASSUMED RELIABLE. CARRIER JOHNSON CANNOT AND DOES NOT WARRANT THE ACCURACY OF THIS INFORMATION AND SHALL NOT BE RESPONSIBLE FOR ANY ERRORS OR OMISSIONS WHICH MAY BE INCORPORATED THEREIN AS A RESULT. THESE DOCUMENTS ARE NOT A SUBSTITUTE FOR FIELD CONFIRMATION OF EXISTING CONDITIONS.

Field Order #13 07.01.03
5 Addendum 5 04.21.2003
3 Addendum 3
2 Addendum 2/Bldg. Dept. Re-Submittal 03.20.2003
Building Dept. Submittal 02.24.2003
ISSUES:
DIRECTORY/FILE NUMBER: 4511-A313 REVISE

XREF'S DRAWINGS:

PROJECT NUMBER: 4511.00
DRAWN BY: CHECKED BY:
DATE: 08.20.02
SCALE: 1/8" = 1'-0"

TITLE: REFLECTED CEILING PLAN FIRST LEVEL AREA 3

DRAWING NO: A3.1.3R

ONTARIO PD:: HEADQUARTERS
2534 S. ARCHIBALD AVE., ONTARIO, CALIFORNIA 91761

ALL DESIGN, ARRANGEMENTS AND PLANS INDICATED OR REPRESENTED BY THIS DRAWING ARE OWNED BY AND THE PROPERTY OF CARRIER JOHNSON AND WERE CREATED AND DEVELOPED FOR USE ON AND IN CONNECTION WITH THE SPECIFIED PROJECT. NONE OF SUCH DESIGN, ARRANGEMENTS AND PLANS SHALL BE USED BY OR DISCLOSED TO ANY PERSON, FIRM OR CORPORATION FOR ANY PURPOSE WHATSOEVER WITHOUT THE WRITTEN PERMISSION OF CARRIER JOHNSON. FILING THESE DRAWINGS OR SPECIFICATIONS WITH ANY PUBLIC AGENCY IS NOT A PUBLICATION OF SAME. NO COPYING, REPRODUCTION OR USE THEREOF IS PERMISSIBLE WITHOUT THE CONSENT OF CARRIER JOHNSON.

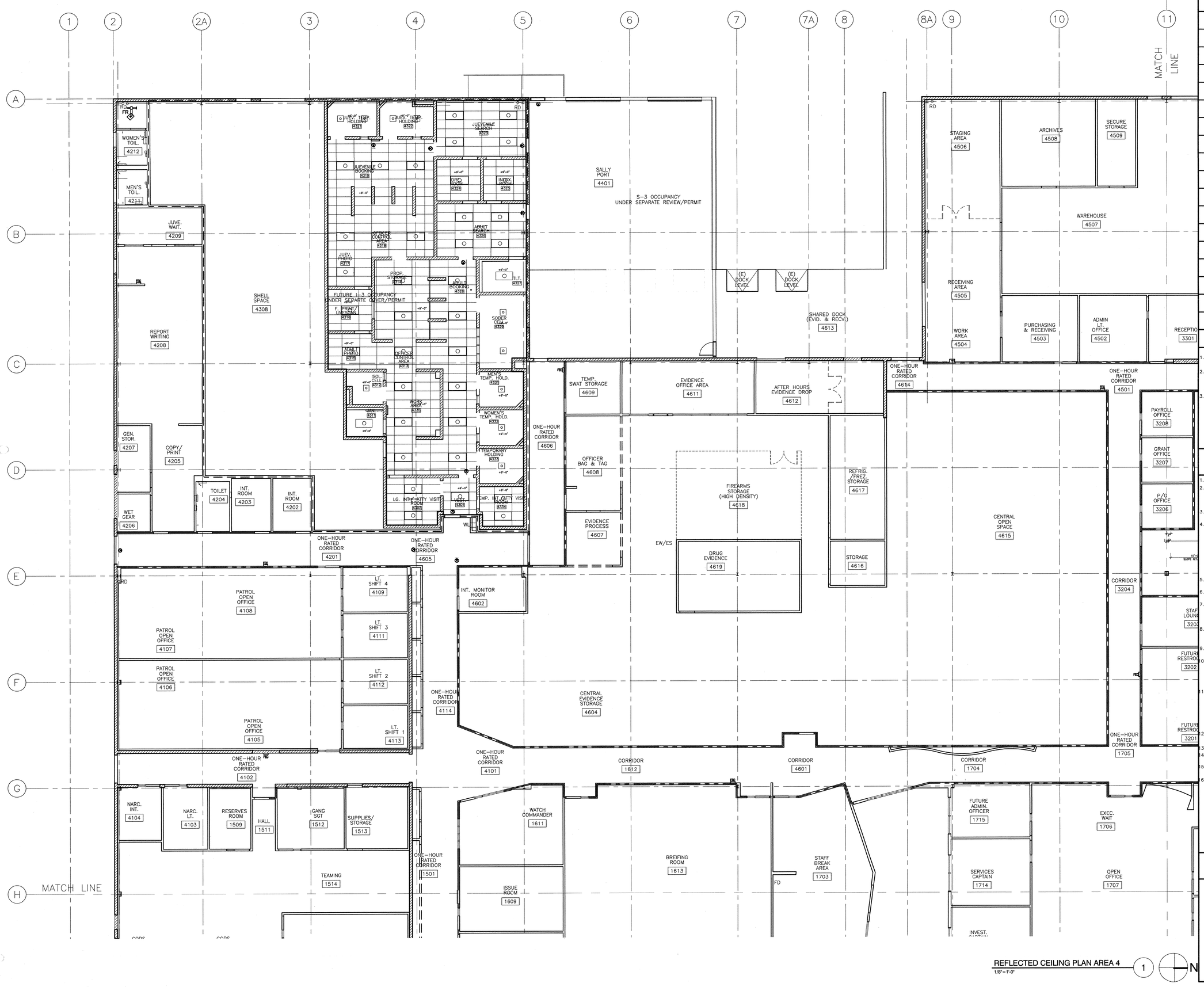

REFLECTED CEILING PLAN AREA 4 (1) — 1/8" = 1'-0"

N

RCP LEGEND

SYMBOL	DESCRIPTION
	EXISTING SPACE NOT IN CONTRACT
	OPEN TO STRUCTURE
	DIRECT & INDIRECT LINEAR LIGHTS
	CEILING GRID
	DRYWALL CEILING, SOFFIT; PAINTED P-6, FLAT FINISH U.N.O.
	2'x2' / 2'x4' FLUORESCENT RECESSED LIGHT FIXTURE-PARABOLIC LENSE
	2'x2' / 2'x4' FLUORESCENT RECESSED LIGHT FIXTURE-PRISMATIC LENS
	RECESSED FLUORESCENT DOWNLIGHT
	CEILING/DECK MOUNT PENDANT FIXTURE
	CELING MOUNTED LINEAR FIXTURE
	WALL MOUNTED DIRECT/INDIRECT LINEAR FIXTURE-CENTER OF FIXTURE 9'-0" A.F.F.
	CELING AND CABLE MOUNTED DIRECT/INDIRECT LINEAR FIXTURE
	COVE LIGHTING
	AIR SUPPLY GRILL
	RETURN AIR GRILL
	LINEAR AIR DIFFUSER
	EXIT SIGN - EDGE LITE
SD	SMOKE DETECTOR

RCP KEY NOTES

1. 12'-0" WIDE X 8'-0" HIGH ELECTRONIC PROJECTION SCREEN, RE: SPECIFICATIONS/DETAILS
2. PAINT EXPOSED STRUCTURE, PIPES AND DECK ABOVE P-6. METAL TO BE SEMIGLOSS FINISH, GYP TO BE FLAT FINISH REMOVE ANY ABANDONED CONSTRUCTION MATERIALS AND CLEAN EXISTING SURFACES THOROUGHLY.
3. PATCH/REPAIR AS REQUIRED NEW SKYLIGHT; REFER TO ROOF PLAN AND DETAILS

GENERAL RCP NOTES

1. CEILING HEIGHTS ARE 9'-0" AFF OR AS NOTED ON PLAN.
2. PROVIDE SINGLE COVER PLATES FOR MULTIPLE GANG SWITCHES, TYPICAL THROUGHOUT REFERENCE ENGINEERS DRAWINGS FOR ROCKER SWITCH AND SPECIFICATIONS. COLOR SHALL BE WHITE U.N.O.
3. PROVIDE RATED CONSTRUCTION AROUND ALL DUCTWORK AND CONDUITS PENETRATING ONE HOUR CONSTRUCTION.
4. GC TO NOTIFY ARCHITECT WHERE ACCESS PANELS ARE REQD TO MEET CODE AND SERVICE MEP EQUIP PRIOR TO INSTALLATION OF SUCH EQUIPMENT. ARCHITECT TO APPROVE ALL ACCESS PANEL LOCATIONS PRIOR TO INSTALLATION. EQUIPMENT REQUIRING ACCESS SHALL BE LOCATED ABOVE SUSP. CLNG WHERE EVER POSSIBLE TO AVOID ACCESS PANELS IN GYP. BD. CEILINGS. PROVIDE FLUSH MNTD. GYP. BD. FACED ACCESS PANEL WITH MUD RING. SUBMIT CUT-SHEET TO ARCH. FOR APPROVAL PRIOR TO ORDER AND INSTALLATION.
5. LOCATION OF ACCENT LIGHTS TO BE FIELD LOCATED BY ARCH. SPACED EQUALLY, TYPICAL.
6. FOR TYPICAL SUSP. CLNG. ASSEMBLY DETAILS, CLEARANCES & INSTALLATION NOTES REFER TO DETAILS
7. FIELD VERIFY ALL ACCESS DOORS WITH ARCHITECT, PRIOR TO INSTALLATION. ALL ACCESS DOORS TO BE WILLIAMS BROS. CORP.; #WB-RDW ACCESS DOOR RECESSED FOR DRYWALL SURFACES (OR APPROVED EQUAL)
8. GENERAL NOTE: ALL CEILING MOUNTED DEVICES (I.E., SMOKE DETECTORS, SPRINKLER HEADS, SECURITY, EXIT SIGNS, ETC.) TO BE ALIGNED W/ LIGHTING FIXTURES (CENTER LINE OF EACH)
9. PROVIDE LINEAR AIR DIFFUSERS AT ALL HARD LID CLNG AREAS - EXPOSED TRIM TO MATCH ADJACENT CEILING COLOR.
10. ALL EXIT SIGNS SHALL BE CONNECT TO AN EMERGENCY ELECT. POWER SYSTEM OR AN APPRVD SELF-LUMINOUS SYSTEM THAT PROVIDES CONT. ILLUMINATION INDEPENDENT OF THE EXTERNAL POWER SOURCE TO ENSURE THAT THE EXIT SIGNS ARE ILLUMINATED AT ALL TIMES.
11. ANY TIME A BUILDING IS OCCUPIED, THE MEANS OF EGRESS SHALL BE ILLUMINATED. PROVIDE EXIT ILLUMINATION THAT HAS A MIN. INTENSITY OF NOT LESS THAN 1 FOOT CANDLE AT THE FLOOR LEVEL. POWER FOR THE MEANS OF EGRESS ILLUMINATION SHALL BE PROVIDED BY THE PREMISES ELECTRICAL SUPPLY. WHEN THE OCCUPANT LOAD EXCEEDS 100, EMERGENCY POWER SHALL BE PROVIDED.
12. ANY LIGHTING SUBSTITUTIONS MUST MEET PHOTO METRIC REQMNTS AND BE APPROVED BY ARCHITECT; PRIOR TO BID.
13. REFER TO FINISH NOTES FOR ADDITION INFORMATION.
14. LIGHT FIXTURE(S) TO BE LOCATED CENTERED, EQUALLY SPACED, BOTH DIRECTIONS, WHERE NO DIMENSIONS ARE PROVIDED.
15. VERIFY CONDITION OF FIXTURE AND LAMP ON EXISTING FIXTURES THAT ARE TO REMAIN. PATCH, REPAIR OR REPLACE AS REQUIRED.
16. SEE MECHANICAL DRAWINGS FOR LOCATIONS OF AIR REGISTERS. (5)

KEY PLAN

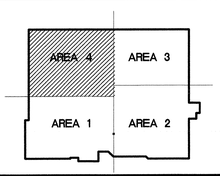

CARRIER JOHNSON
ARCHITECTURE
INTERIOR DESIGN
PLANNING
GORDON B. CARRIER AIA
MICHAEL C. JOHNSON AIA
WILLIAM C. BOCKEN AIA
DEBORAH P. ELLIOTT IIDA
2600 MICHELSON DRIVE
SUITE 400
IRVINE, CALIFORNIA
92612
TEL 949 955-2353
FAX 949 955-2377
1301 THIRD AVENUE
SAN DIEGO, CALIFORNIA
92101
TEL 619 239-2353
FAX 619 239-0227

RECORD DOCUMENTS

THESE DOCUMENTS RELEASED BY CARRIER JOHNSON FOR USE AS RECORD DOCUMENTS WILL SHOW THE REPORTED LOCATION OF THE WORK AND SIGNIFICANT CHANGES MADE DURING CONSTRUCTION PROVIDED BY THE CONTRACTOR AND OTHER PARTIES WHICH WILL BE ASSUMED RELIABLE UNLESS NOTIFIED TO THE CONTRARY. CARRIER JOHNSON HAS NOT VERIFIED INFORMATION PROVIDED BY THE CONTRACTOR AND SHALL NOT BE RESPONSIBLE FOR ANY ERRORS OR OMISSIONS WHICH MAY BE PRESENT IN SUCH INFORMATION AND SHALL NOT BE RESPONSIBLE FOR ANY ERRORS OR OMISSIONS WHICH MAY BE PRESENT IN SUCH DOCUMENTS AS A RESULT. FUTURE CONSTRUCTION PLANNING MUST INCLUDE FIELD CONFIRMATION OF EXISTING CONDITIONS.

ONTARIO PD:: HEADQUARTERS

2534 S. ARCHIBALD AVE., ONTARIO, CALIFORNIA 91761

1 Field Order #13 07.01.03
2 Addendum 5 04.21.2003
3 Addendum 3
2 Addendum 2/Bldg. Dept. Re-Submittal 03.20.2003
Building Dept. Submittal 02.24.2003

ISSUES:
DIRECTORY/FILE NUMBER: 4511-A314 REVISE
XREF'S DRAWINGS:
PROJECT NUMBER: 4511.00
DRAWN BY: CHECKED BY:
DATE: 08.20.03
SCALE: 1/8" = 1'-0"
TITLE: REFLECTED CEILING PLAN FIRST LEVEL AREA 4
DRAWING NO: A3.1.4R

ALL IDEAS, DESIGNS, ARRANGEMENTS, OR PLANS SHALL BE USED BY, OR DISCLOSED TO ANY PERSON, FIRM, OR CORPORATION FOR ANY PURPOSE WHATSOEVER WITHOUT THE WRITTEN PERMISSION OF CARRIER JOHNSON. THE PROJECTION OF SUCH IDEAS, DESIGN, ARRANGEMENTS, OR PLANS SHALL BE USED BY, OR DISCLOSED TO ANY PERSON, FIRM, OR CORPORATION FOR ANY PURPOSE WHATSOEVER WITHOUT THE WRITTEN PERMISSION OF CARRIER JOHNSON. NO COPYING, REPRODUCTION OR USE THEREOF IS PERMISSIBLE WITHOUT THE CONSENT OF CARRIER JOHNSON. THESE DRAWINGS OR SPECIFICATIONS WITH ANY PUBLIC AGENCY IS NOT A PUBLICATION OF SAME. NO COPYING, REPRODUCTION OR USE THEREOF IS PERMISSIBLE WITHOUT THE CONSENT OF CARRIER JOHNSON.

RCP LEGEND

SYMBOL	DESCRIPTION
	EXISTING SPACE NOT IN CONTRACT
	OPEN TO STRUCTURE
	DIRECT & INDIRECT LINEAR LIGHTS
	CEILING GRID
	DRYWALL CEILING, SOFFIT; PAINTED P-6, FLAT FINISH U.N.O.
	2'x2' / 2'x4' FLUORESCENT RECESSED LIGHT FIXTURE-PARABOLIC LENSE
	2'x2' / 2'x4' FLUORESCENT RECESSED LIGHT FIXTURE-PRISMATIC LENS
	RECESSED FLUORESCENT DOWNLIGHT
	CEILING/DECK MOUNT PENDANT FIXTURE
	CELING MOUNTED LINEAR FIXTURE
	WALL MOUNTED DIRECT/INDIRECT LINEAR FIXTURE-CENTER OF FIXTURE 9'-0" A.F.F.
	CELING AND CABLE MOUNTED DIRECT/INDIRECT LINEAR FIXTURE
	COVE LIGHTING
	AIR SUPPLY GRILL
	RETURN AIR GRILL
	LINEAR AIR DIFFUSER
	EXIT SIGN - EDGE LITE
SD	SMOKE DETECTOR

RCP KEY NOTES

1. 12'-0" WIDE X 8'-0" HIGH ELECTRONIC PROJECTION SCREEN, RE: SPECIFICATIONS/DETAILS
2. PAINT EXPOSED STRUCTURE, PIPES AND DECK ABOVE P-6. METAL TO BE SEMIGLOSS FINISH, GYP TO BE FLAT FINISH REMOVE ANY ABANDONED CONSTRUCTION MATERIALS AND CLEAN EXISTING SURFACES THOROUGHLY.
3. PATCH/REPAIR AS REQUIRED NEW SKYLIGHT; REFER TO ROOF PLAN AND DETAILS

GENERAL RCP NOTES

1. CEILING HEIGHTS ARE 9'-0" AFF OR AS NOTED ON PLAN.
2. PROVIDE SINGLE COVER PLATES FOR MULTIPLE GANG SWITCHES, TYPICAL THROUGHOUT REFERENCE ENGINEERS DRAWINGS FOR ROCKER SWITCH AND SPECIFICATIONS. COLOR SHALL BE WHITE U.N.O.
3. PROVIDE RATED CONSTRUCTION AROUND ALL DUCTWORK AND CONDUITS PENETRATING ONE HOUR CONSTRUCTION.
4. GC TO NOTIFY ARCHITECT WHERE ACCESS PANELS ARE REQD TO MEET CODE AND SERVICE MEP EQUIP PRIOR TO INSTALLATION OF SUCH EQUIPMENT. ARCHITECT TO APPROVE ALL ACCESS PANEL LOCATIONS PRIOR TO INSTALLATION. EQUIPMENT REQUIRING ACCESS SHALL BE LOCATED ABOVE SUSP. CLNG WHERE EVER POSSIBLE TO AVOID ACCESS PANELS IN GYP. BD. CEILINGS. PROVIDE FLUSH MNTD. GYP. BD. FACED ACCESS PANEL WITH MUD RING. SUBMIT CUT-SHEET TO ARCH. FOR APPROVAL PRIOR TO ORDER AND INSTALLATION.
5. LOCATION OF ACCENT LIGHTS TO BE FIELD LOCATED BY ARCH. SPACED EQUALLY, TYPICAL.
6. FOR TYPICAL SUSP. CLNG. ASSEMBLY DETAILS, CLEARANCES & INSTALLATION NOTES REFER TO DETAILS
7. FIELD VERIFY ALL ACCESS DOORS WITH ARCHITECT, PRIOR TO INSTALLATION. ALL ACCESS DOORS TO BE WILLIAMS BROS. CORP., FWB-ROW ACCESS DOOR RECESSED FOR DRYWALL SURFACES (OR APPROVED EQUAL)
8. GENERAL NOTE: ALL CEILING MOUNTED DEVICES (I.E., SMOKE DETECTORS, SPRINKLER HEADS, SECURITY, EXIT SIGNS, ETC.) TO BE ALIGNED W/ LIGHTING FIXTURES (CENTER LINE OF EACH)
9. PROVIDE LINEAR AIR DIFFUSERS AT ALL HARD LID CLNG AREAS – EXPOSED TRIM TO MATCH ADJACENT CEILING COLOR.
10. ALL EXIT SIGNS SHALL BE CONNECT TO AN EMERGENCY ELECT. POWER SYSTEM OR AN APPRVD SELF-LUMINOUS SYSTEM THAT PROVIDES CONT. ILLUMINATION INDEPENDENT OF THE EXTERNAL POWER SOURCE TO ENSURE THAT THE EXIT SIGNS ARE ILLUMINATED AT ALL TIMES.
11. ANY TIME A BUILDING IS OCCUPIED, THE MEANS OF EGRESS SHALL BE ILLUMINATED. PROVIDE EXIT ILLUMINATION THAT HAS A MIN. INTENSITY OF NOT LESS THAN 1 FOOT CANDLE AT THE FLOOR LEVEL. POWER FOR THE MEANS OF EGRESS ILLUMINATION SHALL BE PROVIDED BY THE PREMISES ELECTRICAL SUPPLY. WHEN THE OCCUPANT LOAD EXCEEDS 100, EMERGENCY POWER SHALL BE PROVIDED.
12. ANY LIGHTING SUBSTITUTIONS MUST MEET PHOTO METRIC REQMNTS AND BE APPROVED BY ARCHITECT; PRIOR TO BID.
13. REFER TO FINISH NOTES FOR ADDITION INFORMATION.
14. LIGHT FIXTURE(S) TO BE LOCATED CENTERED, EQUALLY SPACED, BOTH DIRECTIONS, WHERE NO DIMENSIONS ARE PROVIDED.
15. VERIFY CONDITION OF FIXTURE AND LAMP ON EXISTING FIXTURES THAT ARE TO REMAIN. PATCH, REPAIR OR REPLACE AS REQUIRED.
16. SEE MECHANICAL DRAWINGS FOR LOCATIONS OF AIR REGISTERS. (5)

KEY PLAN

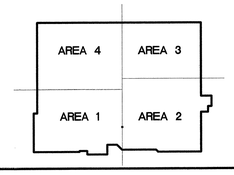

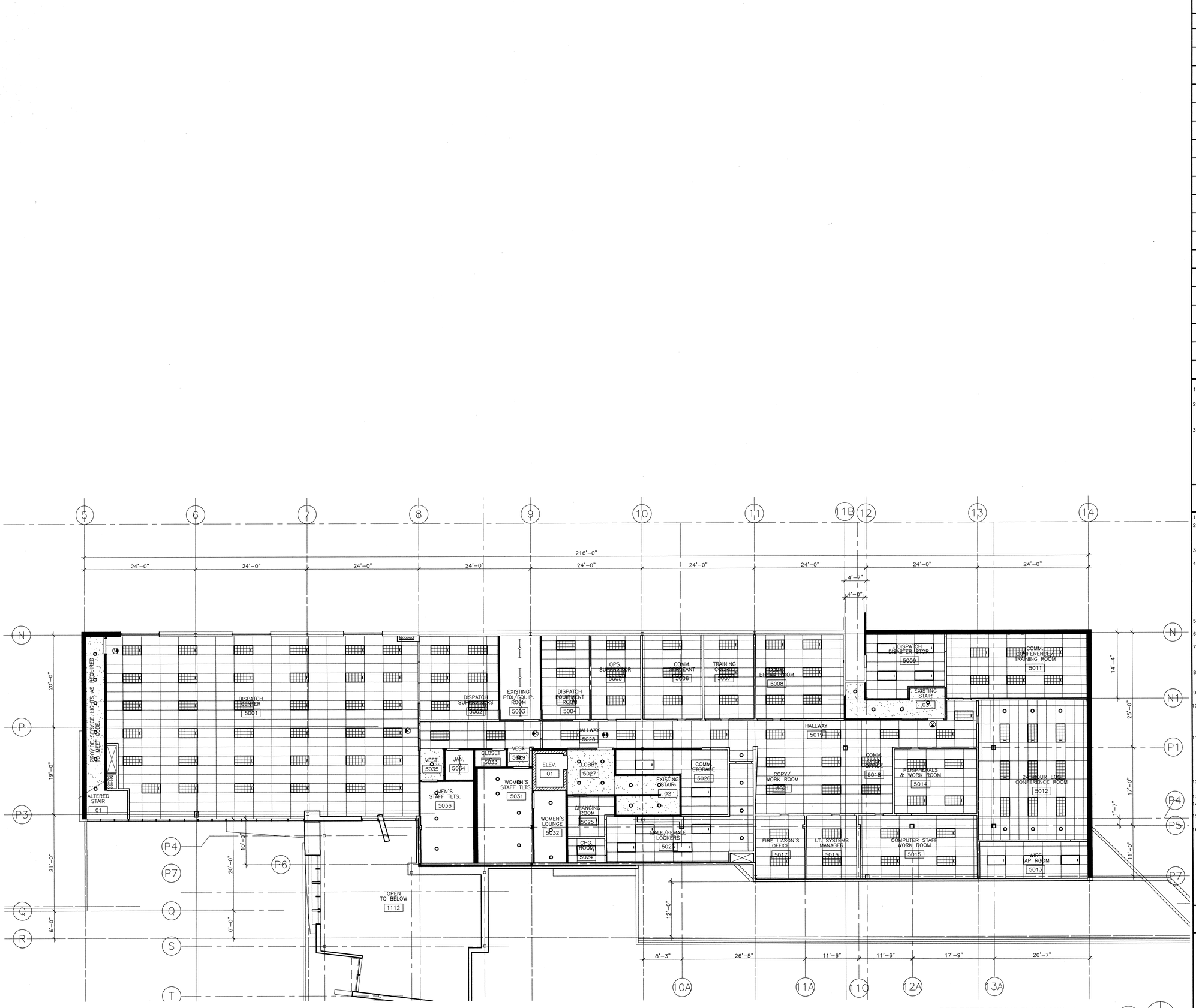

REFLECTED CEILING PLAN SECOND LEVEL 1
1/8"=1'-0"

CARRIER JOHNSON

ARCHITECTURE
INTERIOR DESIGN
PLANNING

GORDON R. CARRIER AIA
MICHAEL C. JOHNSON AIA

WILLIAM C. BOCKEN AIA
DEBORAH F. ELLIOTT IIDA

2600 MICHELSON DRIVE
SUITE 400
IRVINE, CALIFORNIA
92612

TEL 949 955-2353
FAX 949 955-2377

1301 THIRD AVENUE
SAN DIEGO, CALIFORNIA
92101

TEL 619 239-2353
FAX 619 239-6227

RECORD DOCUMENTS

THESE DOCUMENTS RELEASED BY CARRIER JOHNSON FOR USE AS RECORD DOCUMENTS, CONTAIN ALL CHANGES MADE DURING THE CONSTRUCTION PROCESS, AND ARE BASED ON UNVERIFIED INFORMATION PROVIDED BY THE CONTRACTOR AND OTHER PARTIES WHICH SHALL BE RELIED UPON BY CARRIER JOHNSON CANNOT AND DOES NOT WARRANT THE ACCURACY AND/OR COMPLETENESS OF THE INFORMATION ACQUIRED FROM SUCH SOURCES. ANY ERRORS, OMISSIONS WHICH MAY BE INCORPORATED THEREIN AS A RESULT OF FUTURE CONSTRUCTION PLANNING MUST INCLUDE FIELD CONFIRMATION OF EXISTING CONDITIONS.

ONTARIO PD:: HEADQUARTERS
2534 S. ARCHIBALD AVE., ONTARIO, CALIFORNIA 91761

Field Order #13 07.01.03
5 Addendum 5 04.21.2003
3 Addendum 3
2 Addendum 2/Bldg. Dept. Re-Submittal 03.20.2003
Building Dept. Submittal 02.24.2003

ISSUES:
DIRECTORY/FILE NUMBER: 4511 – A325revised

XREF'S DRAWINGS:

PROJECT NUMBER: 4511.00
DRAWN BY: CHECKED BY:
DATE: 082003
SCALE: AS NOTED
TITLE: REFLECTED CEILING SECOND LEVEL

DRAWING NO: A3.2.5R

ALL IDEAS, DESIGN, ARRANGEMENTS AND PLANS INDICATED OR REPRESENTED BY THIS DRAWING ARE OWNED BY, AND THE PROPERTY OF CARRIER JOHNSON AND WERE CREATED, EVOLVED AND DEVELOPED FOR USE ON, AND IN CONNECTION WITH THE SPECIFIED PROJECT. NONE OF SUCH IDEAS, DESIGNS, ARRANGEMENTS OR PLANS SHALL BE USED BY OR DISCLOSED TO ANY PERSON, FIRM OR CORPORATION FOR ANY PURPOSE WHATSOEVER WITHOUT THE WRITTEN PERMISSION OF CARRIER JOHNSON. COPYING, REPRODUCTION OR USE THEREOF IS PERMISSIBLE WITHOUT THE CONSENT OF CARRIER JOHNSON, ANY PUBLIC AGENCY IS NOT A PUBLICATION OF SAME; NO COPYING, REPRODUCTION OR USE THEREOF IS PERMISSIBLE WITHOUT THE CONSENT OF CARRIER JOHNSON. CARRIER JOHNSON, FILING THESE DRAWINGS OR SPECIFICATIONS WITH ANY PUBLIC AGENCY IS NOT A PUBLICATION OF SAME; NO COPYING, REPRODUCTION OR USE THEREOF IS PERMISSIBLE WITHOUT THE CONSENT OF CARRIER JOHNSON.

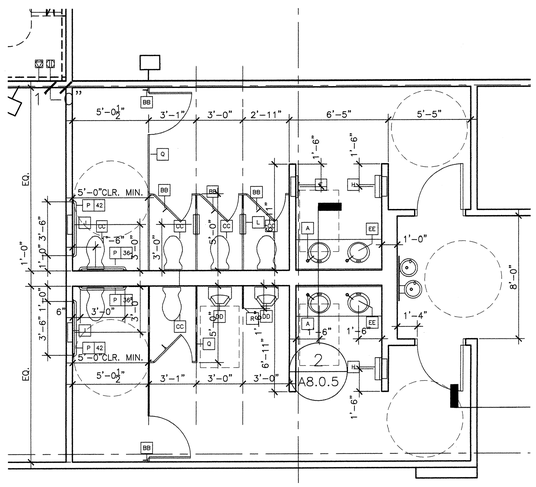

ENLARGED PLAN - RESTROOMS 1605/1606 — 3
1/4"=1'-0"

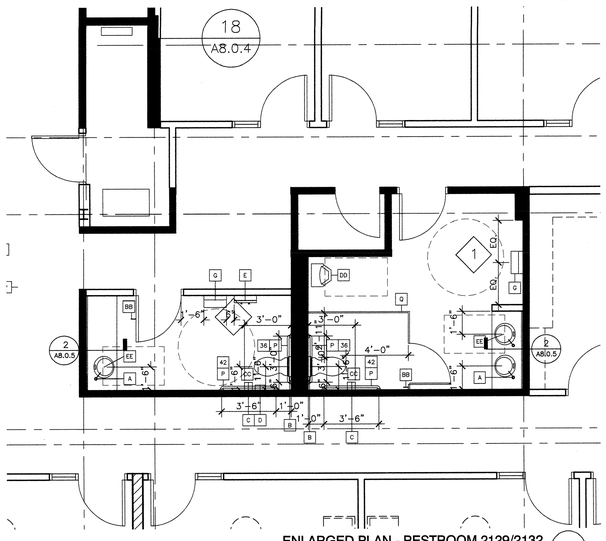

ENLARGED PLAN - RESTROOM 2129/2132 — 2
1/4"=1'-0"

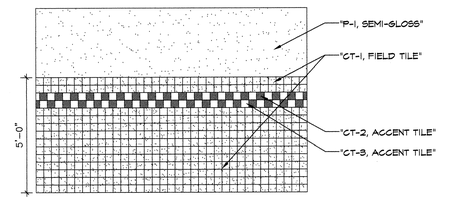

TYPICAL WALL TILE ELEVATION — 6
3/8"=1'-0"

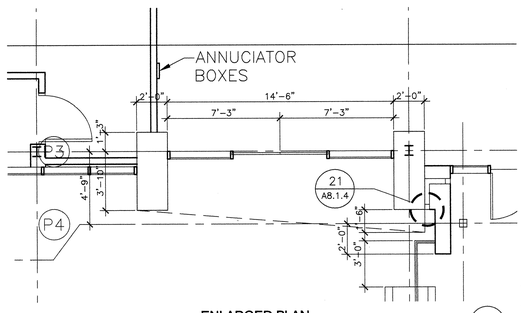

ENLARGED PLAN — 5
1/4"=1'-0"

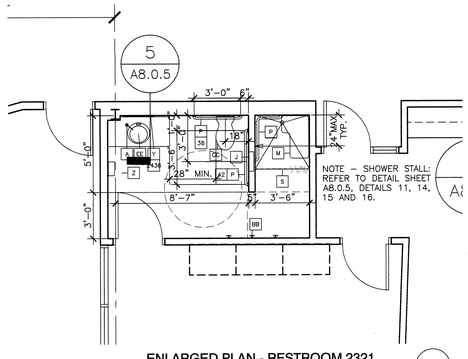

ENLARGED PLAN - RESTROOM 2321 — 4
1/4"=1'-0"

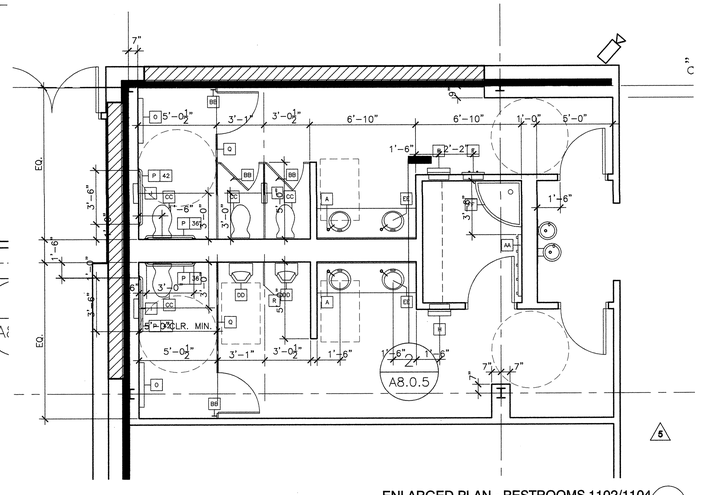

ENLARGED PLAN - RESTROOMS 1102/1104 — 1
1/4"=1'-0"

ACCESSORY LEGEND

- A — HAND SOAP DISPENSER — BOBRICK: B-8226 / LAVATORY MOUNTED
- B — TOILET SEAT COVER DISPENSER — BOBRICK: B4221 CONTURA SERIES / SURFACE MOUNTED
- C — MULTI-ROLL TOILET TISSUE DISPENSER — BOBRICK: B4288 CONTURA SERIES / SURFACE MOUNTED
- D — SANITARY NAPKIN DISPOSAL — BOBRICK: B270 CONTURA SERIES / SURFACE MOUNTED
- E — SANITARY NAPKIN/TAMPON VENDOR — BOBRICK: B-43500X2 50 CONTURA SERIES / SURFACE MOUNTED
- F — SANITARY NAPKIN/TAMPON VENDOR — BOBRICK: B-43500X2 50 CONTURA SERIES / RECESSED
- G — PAPER TOWEL DISPENSER & WASTE RECEPTACLE — BOBRICK: B-43949 CONTURA SERIES / SURFACE MOUNTED
- H — PAPER TOWEL DISPENSER & WASTE RECEPTACLE — BOBRICK: B-43944 CONTURA SERIES / RECESSED
- I — TOILET SEAT COVER & TISSUE DISPENSER — BOBRICK: B-3474 CONTURA SERIES / RECESSED
- J — TOILET SEAT COVER & TISSUE DISPENSER & SANITARY NAPKIN DISPOSAL — BOBRICK: B-3574 CONTURA SERIES / RECESSED
- K — TOILET SEAT COVER & TISSUE DISPENSER — BOBRICK: B-347 / PARTITION MOUNTED
- L — TOILET SEAT COVER & TISSUE DISPENSER & SANITARY NAPKIN DISPOSAL — BOBRICK: B-357 / PARTITION MOUNTED
- M — REVERSIBLE FOLDING SHOWER SEAT — BOBRICK: B-5181
- N — FOLDING SHOWER SEAT — BOBRICK: B-5191
- O — BABY CHANGING STATION — KOALA BEAR KARE: HORIZONTAL CHANGING TABLE – BEIGE
- P — GRAB BARS — BOBRICK: B-6806 X 30; BOBRICK: B-6806 X 36; BOBRICK: B-6806 X 42; BOBRICK: B-6861
- Q — TOILET PARTITIONS — BOBRICK: 1030 TRIMLINE SERIES (OR APPROVED EQUAL)
- R — URINAL SCREEN — BOBRICK: 1030 TRIMLINE SERIES (OR APPROVED EQUAL)
- S — SHOWER ACCESSORIES — BOBRICK: B6047 CLASSIC SERIES / SHOWER CURTAIN ROD; BOBRICK: B-204-3 / VINYL SHOWER CURTAIN; BOBRICK: B-204-1 SS SHOWER CURTAIN HOOKS
- T — STAINLESS STEEL SHELF — BOBRICK: B-2986X36
- U — COLUMN SHOWER
- V — DOUBLE ROBE HOOK — BOBRICK: B6727
- W — HAND SOAP DISPENSER — BOBRICK: B-4112 CONTURA SERIES / SURFACE MOUNTED
- X — MIRROR — BOBRICK: B-293 2436
- Y — MIRROR — BOBRICK: B-165 2436; BOBRICK: B-165 3672
- Z — PAPER TOWEL DISPENSER — BOBRICK: B4262 CONTURA SERIES / SURFACE MOUNTED
- AA — MOP/BROOM HOLDER — BOBRICK-223 X 48
- BB — COAT HOOK WITH BUMPER — BOBRICK: B-212
- CC — TOILET
- DD — URINAL
- EE — LAVATORY – SINGLE BASIN / UNDERCOUNTER MOUNTED
- FF — FLOOR SINK
- GG — LOCKER – DOUBLE
- HH — LOCKER – SINGLE
- JJ — LOCKER BENCH
- KK — LAVATORY – SINGLE BASIN / WALL MOUNTED
- LL — STAINLESS STEEL HOOK STRIP — BOBRICK: B-232X36
- MM
- NN

PLAN KEY NOTES

1. REPLACE EXISTING PARTITIONS WITH NEW PARTITIONS. RELOCATE AND/OR REPLACE EXISTING ACCESSORIES AS REQUIRED BY CODE OR BY DAMAGE. PATCH SURFACES TO MATCH EXISTING MATERIALS. CLEAN EXISTING FINISHES THOROUGHLY THAT ARE TO REMAIN. ALL EXISTING GYPSUM BOARD SURFACES TO BE PREPPED FOR NEW PAINT.
2. ACCESS FLOORING DETAILS REFER TO SHEET A8.0.6.

GENERAL NOTES

1. SUBMIT FULL RANGE OF COLORS FOR ARCHITECTS SELECTION OF TOILET PARTITION FINISHES.
2. REFER TO MOUNTING HEIGHT SCHEDULE FOR ALL HANDICAP ACCESSIBLE INSTALLATION DIMENSIONS ON SHEET A0.4.
3. PROVIDE PLAN AND ELEVATION VIEW SHOP DRAWINGS INDICATING ALL ACCESSORIES, HEIGHTS AND INSTALLATION DETAIL FOR ARCHITECTS REVIEW AND APPROVAL.

CARRIER JOHNSON
ARCHITECTURE
INTERIOR DESIGN
PLANNING
GORDON R. CARRIER AIA
MICHAEL C. JOHNSON AIA
WILLIAM C. BOCKEN AIA
DEBORAH P. ELLIOTT IIDA
2600 MICHELSON DRIVE
SUITE 400
IRVINE, CALIFORNIA
92612
TEL 949 955-2353
FAX 949 955-2377
1301 THIRD AVENUE
SAN DIEGO, CALIFORNIA
92101
TEL 619 239-2353
FAX 619 239-6227

RECORD DOCUMENTS
THESE DOCUMENTS RELEASED BY CARRIER JOHNSON FOR USE AS RECORD DOCUMENTS REFLECT ALL MINOR CHANGES MADE DURING THE CONSTRUCTION PROCESS, AND ARE BASED ON UNVERIFIED INFORMATION PROVIDED BY THE CONTRACTOR AND OTHER PARTIES. CARRIER JOHNSON CANNOT AND DOES NOT WARRANT THE ACCURACY AND/OR COMPLETENESS OF THE INFORMATION AND SHALL NOT BE RESPONSIBLE FOR ANY DISCREPANCIES OR OMISSIONS WHICH MAY BE INCORPORATED THEREIN AS A RESULT. FUTURE CONSTRUCTION PLANNING MUST INCLUDE FIELD CONFIRMATION OF EXISTING CONDITIONS.

ONTARIO PD:: HEADQUARTERS

2534 S. ARCHIBALD AVE., ONTARIO, CALIFORNIA 91761

Field Order #13 07.01.03
5 Addendum 5 04.21.2003
3 Addendum 3
2 Addendum 2/Bldg. Dept. Re-Submittal 03.20.2003
Building Dept. Submittal 02.24.2003
ISSUES:
DIRECTORY/FILE NUMBER: 4511-A41
XREF'S DRAWINGS:
PROJECT NUMBER: 4511.00
DRAWN BY: CHECKED BY:
DATE: 2/24/03
SCALE: AS NOTED
TITLE: ENLARGED FLOOR PLANS
DRAWING NO: A4.1

ALL IDEAS, DESIGN, ARRANGEMENTS, OR PLANS SHALL BE USED BY, OR DISCLOSED TO ANY PERSON, FIRM, OR CORPORATION FOR ANY PURPOSE WHATSOEVER WITHOUT THE WRITTEN PERMISSION OF CARRIER JOHNSON. FILING THESE DRAWINGS OR SPECIFICATIONS WITH ANY PUBLIC AGENCY IS NOT A PUBLICATION OF SAME. NO COPYING, REPRODUCTION OR USE THEREOF IS PERMISSIBLE WITHOUT THE CONSENT OF CARRIER JOHNSON.

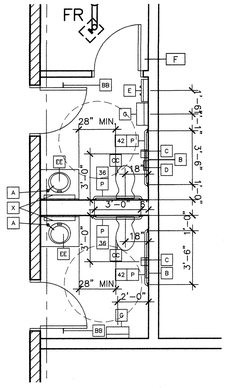

ENLARGED PLAN 4
1/4"=1'-0"

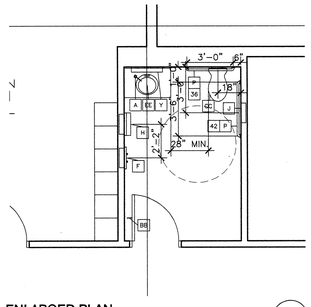

ENLARGED PLAN 3
1/4"=1'-0"

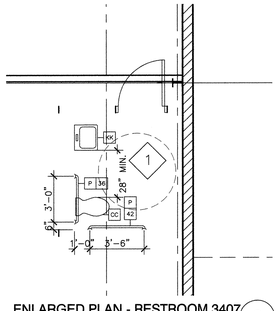

ENLARGED PLAN - RESTROOM 3407 2
1/4"=1'-0"

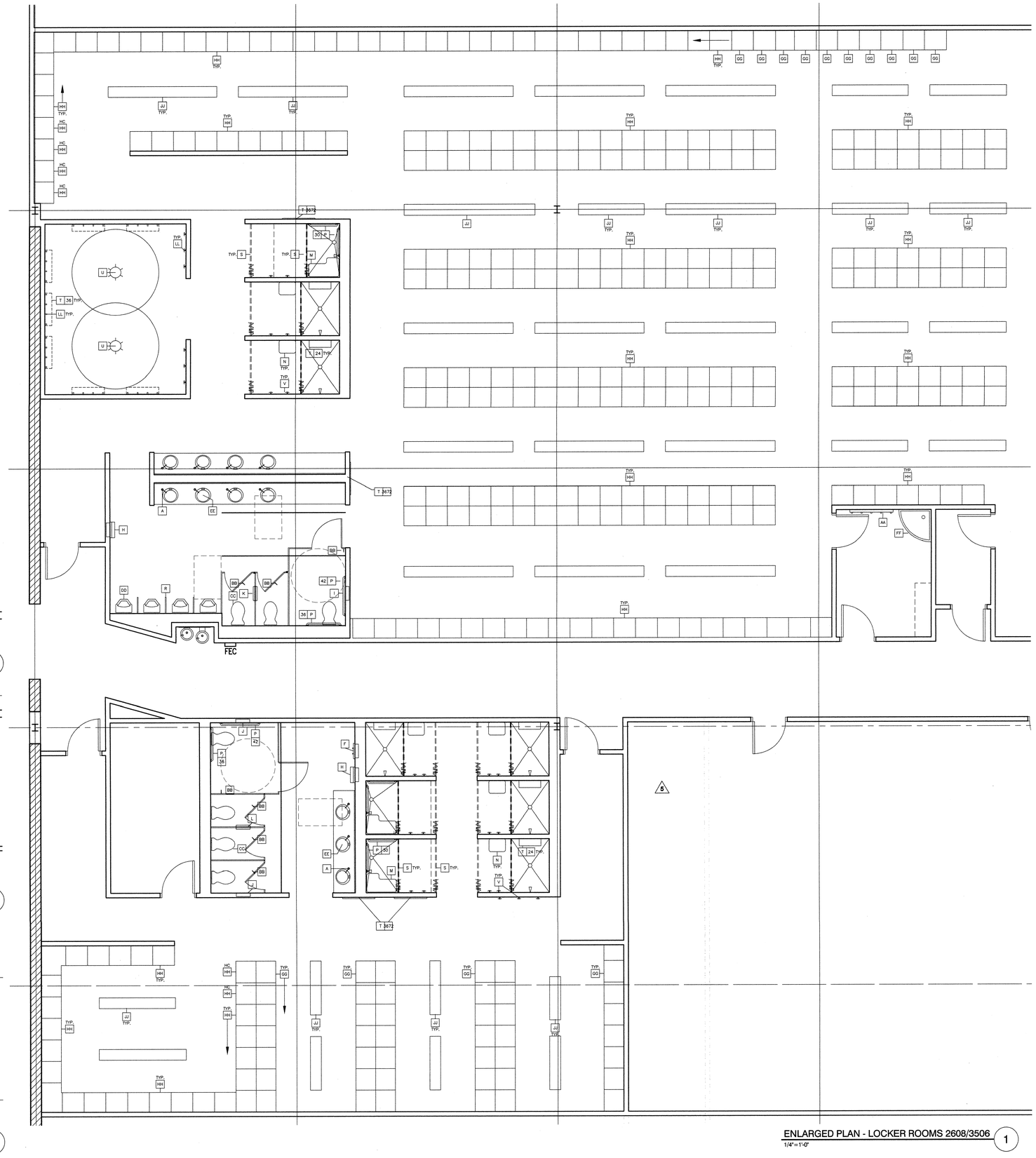

ENLARGED PLAN - LOCKER ROOMS 2608/3506 1
1/4"=1'-0"

ACCESSORY LEGEND

- A HAND SOAP DISPENSER BOBRICK: B-8226 / LAVATORY MOUNTED
- B TOILET SEAT COVER DISPENSER BOBRICK: B4221 CONTURA SERIES / SURFACE MOUNTED
- C MULTI-ROLL TOILET TISSUE DISPENSER BOBRICK: B4288 CONTURA SERIES / SURFACE MOUNTED
- D SANITARY NAPKIN DISPOSAL BOBRICK: B270 CONTURA SERIES / SURFACE MOUNTED
- E SANITARY NAPKIN/TAMPON VENDOR BOBRICK: B-43500X2 50 CONTURA SERIES / SURFACE MOUNTED
- F SANITARY NAPKIN/TAMPON VENDOR BOBRICK: B-43500X2 50 CONTURA SERIES / RECESSED
- G PAPER TOWEL DISPENSER & WASTE RECEPTACLE BOBRICK: B-43949 CONTURA SERIES / SURFACE MOUNTED
- H PAPER TOWEL DISPENSER & WASTE RECEPTACLE BOBRICK: B-43944 CONTURA SERIES / RECESSED
- I TOILET SEAT COVER & TISSUE DISPENSER BOBRICK: B-3474 CONTURA SERIES / RECESSED
- J TOILET SEAT COVER & TISSUE DISPENSER & SANITARY NAPKIN DISPOSAL BOBRICK: B-3574 CONTURA SERIES / RECESSED
- K TOILET SEAT COVER & TISSUE DISPENSER BOBRICK: B-347 / PARTITION MOUNTED
- L TOILET SEAT COVER & TISSUE DISPENSER & SANITARY NAPKIN DISPOSAL BOBRICK: B-357 / PARTITION MOUNTED
- M REVERSIBLE FOLDING SHOWER SEAT BOBRICK: B-5181
- N FOLDING SHOWER SEAT BOBRICK: B-5191
- O BABY CHANGING STATION KOALA BEAR KARE: HORIZONTAL CHANGING TABLE - BEIGE
- P GRAB BARS BOBRICK: B-6806 X 30 BOBRICK: B-6806 X 36 BOBRICK: B-6806 X 42 BOBRICK: B-6861
- Q TOILET PARTITIONS BOBRICK: 1030 TRIMLINE SERIES (OR APPROVED EQUAL)
- R URINAL SCREEN BOBRICK: 1030 TRIMLINE SERIES (OR APPROVED EQUAL)
- S SHOWER ACCESSORIES BOBRICK: B6047 CLASSIC SERIES / SHOWER CURTAIN ROD BOBRICK: B-204-3 / VINYL SHOWER CURTAIN BOBRICK: B-204-1 SS SHOWER CURTAIN HOOKS
- T STAINLESS STEEL SHELF BOBRICK: B-298X36
- U COLUMN SHOWER
- V DOUBLE ROBE HOOK BOBRICK: B6727
- W HAND SOAP DISPENSER BOBRICK: B-4112 CONTURA SERIES / SURFACE MOUNTED
- X MIRROR BOBRICK: B-293 2436
- Y MIRROR BOBRICK: B-165 2436 BOBRICK: B-165 3672
- Z PAPER TOWEL DISPENSER BOBRICK: B4262 CONTURA SERIES / SURFACE MOUNTED
- AA MOP/BROOM HOLDER BOBRICK-223 X 48
- BB COAT HOOK WITH BUMPER BOBRICK: B-212
- CC TOILET
- DD URINAL
- EE LAVATORY - SINGLE BASIN / UNDERCOUNTER MOUNTED
- FF FLOOR SINK
- GG LOCKER - DOUBLE
- HH LOCKER - SINGLE
- JJ LOCKER BENCH
- KK LAVATORY - SINGLE BASIN / WALL MOUNTED
- LL STAINLESS STEEL HOOK STRIP BOBRICK: B-232X36
- MM
- NN

PLAN KEY NOTES

1. REPLACE EXISTING PARTITIONS WITH NEW PARTITIONS. RELOCATE AND/OR REPLACE EXISTING ACCESSORIES AS REQUIRED BY CODE OR BY DAMAGE. PATCH SURFACES TO MATCH EXISTING MATERIALS. CLEAN EXISTING FINISHES THOROUGHLY THAT ARE TO REMAIN. ALL EXISTING GYPSUM BOARD SURFACES TO BE PREPPED FOR NEW PAINT.
2. ACCESS FLOORING DETAILS REFER TO SHEET A8.0.6.

GENERAL NOTES

1. SUBMIT FULL RANGE OF COLORS FOR ARCHITECTS SELECTION OF TOILET PARTITION FINISHES.
2. REFER TO MOUNTING HEIGHT SCHEDULE FOR ALL HANDICAP ACCESSIBLE INSTALLATION DIMENSIONS ON SHEET A0.4.
3. PROVIDE PLAN AND ELEVATION VIEW SHOP DRAWINGS INDICATING ALL ACCESSORIES, HEIGHTS AND INSTALLATION DETAIL FOR ARCHITECTS REVIEW AND APPROVAL.

CARRIER JOHNSON
ARCHITECTURE
INTERIOR DESIGN
PLANNING
GORDON R. CARRIER AIA
MICHAEL C. JOHNSON AIA
WILLIAM C. BOCKEN AIA
DEBORAH P. ELLIOTT IIDA
2600 MICHELSON DRIVE
SUITE 400
IRVINE, CALIFORNIA
92612
TEL 949 955-2353
FAX 949 955-2377
1301 THIRD AVENUE
SAN DIEGO, CALIFORNIA
92101
TEL 619 239-2353
FAX 619 239-6227

RECORD DOCUMENTS
THESE DOCUMENTS RELEASED BY CARRIER JOHNSON FOR USE AS RECORD DOCUMENTS WILL SHOW THE REPORTED LOCATION OF THE WORK AND SIGNIFICANT CHANGES MADE DURING CONSTRUCTION. THE INFORMATION SHOWN IS BASED UPON UNVERIFIED INFORMATION PROVIDED BY THE CONTRACTOR AND OTHER PARTIES WHICH WILL BE ASSUMED RELIABLE. CARRIER JOHNSON DOES NOT WARRANT THE ACCURACY OR COMPLETENESS OF THE INFORMATION AND SHALL NOT BE RESPONSIBLE FOR ANY ERRORS OR OMISSIONS WHICH MAY BE CONTAINED IN THESE PLANS AS A RESULT. FUTURE CONSTRUCTION PLANNING MUST INCLUDE FIELD CONFIRMATION OF EXISTING CONDITIONS.

ONTARIO PD:: HEADQUARTERS

2534 S. ARCHIBALD AVE., ONTARIO, CALIFORNIA 91761

Field Order #13 07.01.03
5 Addendum 5 04.21.2003
3 Addendum 3
2 Addendum 2/Bldg. Dept. Re-Submittal 03.20.2003
Building Dept. Submittal 02.24.2003
ISSUES:
DIRECTORY/FILE NUMBER: 4511-A42
XREF'S DRAWINGS:
PROJECT NUMBER: 4511.00
DRAWN BY: CHECKED BY:
DATE: 2/24/03
SCALE: AS NOTED
TITLE: ENLARGED FLOOR PLANS

DRAWING NO: A4.2

ALL IDEAS, DESIGN, ARRANGEMENTS AND PLANS INDICATED OR REPRESENTED BY THIS DRAWING ARE OWNED BY AND THE PROPERTY OF CARRIER JOHNSON AND WERE CREATED, EVOLVED AND DEVELOPED FOR USE WITH RESPECT TO THE SPECIFIED PROJECT AND SHALL NOT BE USED BY ANY PERSON, FIRM OR CORPORATION FOR ANY PURPOSE WHATSOEVER, EXCEPT BY WRITTEN AGREEMENT WITH CARRIER JOHNSON. IN THE EVENT OF UNAUTHORIZED REUSE OF THESE PLANS BY ANY PARTY, SUCH PARTY SHALL INDEMNIFY AND HOLD CARRIER JOHNSON HARMLESS FROM ANY AND ALL LOSS OR EXPENSE INCLUDING BUT NOT LIMITED TO ATTORNEYS' FEES AND COSTS. VISUAL CONTACT WITH THESE PLANS OR OTHER SIMILAR DRAWINGS OR SPECIFICATIONS SHALL CONSTITUTE PRIMA FACIE EVIDENCE OF ACCEPTANCE OF THESE RESTRICTIONS. FILING THESE DRAWINGS OR SPECIFICATIONS WITH ANY PUBLIC AGENCY IS NOT A PUBLICATION OF SAME. NO COPYING, REPRODUCTION OR USE THEREOF IS PERMISSIBLE WITHOUT THE CONSENT OF CARRIER JOHNSON.

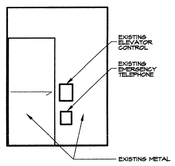

D

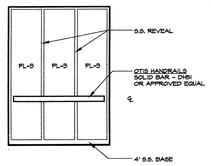

C

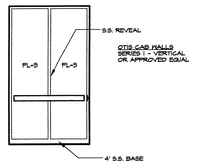

B

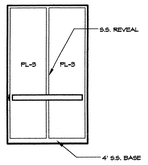

A

ELEVATOR ELEVATION 6
1/4"=1'-0"

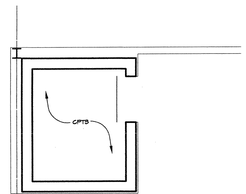

FLOOR FINISH PLAN 5
1/4"=1'-0"

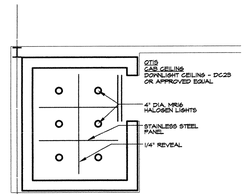

REFLECTED CEILING PLAN 4
1/4"=1'-0"

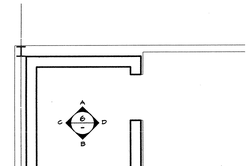

ENLARGED PLAN 3
1/4"=1'-0"

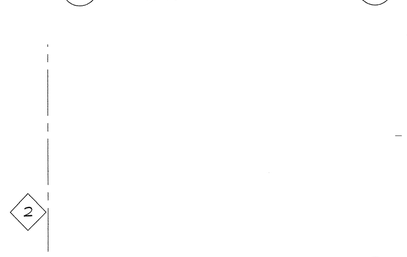

ENLARGED PLAN - COMPUTER ROOM 3205 2
1/4"=1'-0"

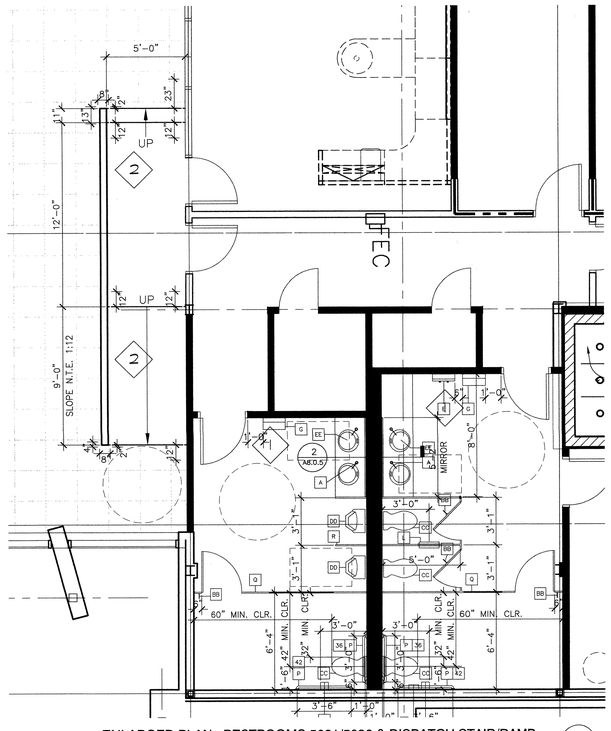

ENLARGED PLAN - RESTROOMS 5031/5036 & DISPATCH STAIR/RAMP 1
1/4"=1'-0"

ACCESSORY LEGEND

- A HAND SOAP DISPENSER BOBRICK: B-8226 / LAVATORY MOUNTED
- B TOILET SEAT COVER DISPENSER BOBRICK: B4221 CONTURA SERIES / SURFACE MOUNTED
- C MULTI-ROLL TOILET TISSUE DISPENSER BOBRICK: B4288 CONTURA SERIES / SURFACE MOUNTED
- D SANITARY NAPKIN DISPOSAL BOBRICK: B270 CONTURA SERIES / SURFACE MOUNTED
- E SANITARY NAPKIN/TAMPON VENDOR BOBRICK: B-43500X2 50 CONTURA SERIES / SURFACE MOUNTED
- F SANITARY NAPKIN/TAMPON VENDOR BOBRICK: B-43500X2 50 CONTURA SERIES / RECESSED
- G PAPER TOWEL DISPENSER & WASTE RECEPTACLE BOBRICK: B-43949 CONTURA SERIES / SURFACE MOUNTED
- H PAPER TOWEL DISPENSER & WASTE RECEPTACLE BOBRICK: B-43944 CONTURA SERIES / RECESSED
- I TOILET SEAT COVER & TISSUE DISPENSER BOBRICK: B-3474 CONTURA SERIES / RECESSED
- J TOILET SEAT COVER & TISSUE DISPENSER & SANITARY NAPKIN DISPOSAL BOBRICK: B-3574 CONTURA SERIES / RECESSED
- K TOILET SEAT COVER & TISSUE DISPENSER BOBRICK: B-347 / PARTITION MOUNTED
- L TOILET SEAT COVER & TISSUE DISPENSER & SANITARY NAPKIN DISPOSAL BOBRICK: B-357 / PARTITION MOUNTED
- M REVERSIBLE FOLDING SHOWER SEAT BOBRICK: B-5181
- N FOLDING SHOWER SEAT BOBRICK: B-5191
- O BABY CHANGING STATION KOALA BEAR KARE: HORIZONTAL CHANGING TABLE - BEIGE
- P GRAB BARS BOBRICK: B-6806 X 30 BOBRICK: B-6806 X 36 BOBRICK: B-6806 X 42 BOBRICK: B-6861
- Q TOILET PARTITIONS BOBRICK: 1030 TRIMLINE SERIES (OR APPROVED EQUAL)
- R URINAL SCREEN BOBRICK: 1030 TRIMLINE SERIES (OR APPROVED EQUAL)
- S SHOWER ACCESSORIES BOBRICK: B6047 CLASSIC SERIES / SHOWER CURTAIN ROD BOBRICK: B-204-3 / VINYL SHOWER CURTAIN BOBRICK: B-204-1 SS SHOWER CURTAIN HOOKS
- T STAINLESS STEEL SHELF BOBRICK: B-298X36
- U COLUMN SHOWER
- V DOUBLE ROBE HOOK BOBRICK: B6727
- W HAND SOAP DISPENSER BOBRICK: B-4112 CONTURA SERIES / SURFACE MOUNTED
- X MIRROR BOBRICK: B-293 2436
- Y MIRROR BOBRICK: B-165 2436 BOBRICK: B-165 3672
- Z PAPER TOWEL DISPENSER BOBRICK: B4262 CONTURA SERIES / SURFACE MOUNTED
- AA MOP/BROOM HOLDER BOBRICK-223 X 48
- BB COAT HOOK WITH BUMPER BOBRICK: B-212
- CC TOILET
- DD URINAL
- EE LAVATORY - SINGLE BASIN / UNDERCOUNTER MOUNTED
- FF FLOOR SINK
- GG LOCKER - DOUBLE
- HH LOCKER - SINGLE
- JJ LOCKER BENCH
- KK LAVATORY - SINGLE BASIN / WALL MOUNTED
- LL STAINLESS STEEL HOOK STRIP BOBRICK: B-232X36
- MM
- NN

PLAN KEY NOTES 1

1. REPLACE EXISTING PARTITIONS WITH NEW PARTITIONS. RELOCATE AND/OR REPLACE EXISTING ACCESSORIES AS REQUIRED BY CODE OR BY DAMAGE. PATCH SURFACES TO MATCH EXISTING MATERIALS. CLEAN EXISTING FINISHES THOROUGHLY THAT ARE TO REMAIN. ALL EXISTING GYPSUM BOARD SURFACES TO BE PREPPED FOR NEW PAINT.
2. ACCESS FLOORING DETAILS REFER TO SHEET A8.0.6.

GENERAL NOTES

1. SUBMIT FULL RANGE OF COLORS FOR ARCHITECTS SELECTION OF TOILET PARTITION FINISHES.
2. REFER TO MOUNTING HEIGHT SCHEDULE FOR ALL HANDICAP ACCESSIBLE INSTALLATION DIMENSIONS ON SHEET A0.4.
3. PROVIDE PLAN AND ELEVATION VIEW SHOP DRAWINGS INDICATING ALL ACCESSORIES, HEIGHTS AND INSTALLATION DETAIL FOR ARCHITECTS REVIEW AND APPROVAL.

CARRIER JOHNSON
ARCHITECTURE
INTERIOR DESIGN
PLANNING
GORDON R. CARRIER AIA
MICHAEL C. JOHNSON AIA
WILLIAM C. BOCKEN AIA
DEBORAH P. ELLIOTT IIDA
2600 MICHELSON DRIVE
SUITE 400
IRVINE, CALIFORNIA
92612
TEL 949 955-2353
FAX 949 955-2377
1301 THIRD AVENUE
SAN DIEGO, CALIFORNIA
92101
TEL 619 239-2353
FAX 619 239-6227

RECORD DOCUMENTS
THESE DOCUMENTS RELEASED BY CARRIER JOHNSON FOR USE AS RECORD DOCUMENTS WILL REFLECT THE REPORTED LOCATIONS OF CONCEALED CONDITIONS AS THEY WERE DISCLOSED DURING THE CONSTRUCTION PROCESS, AND ARE BASED ON UNVERIFIED INFORMATION PROVIDED BY THE CONTRACTOR AND OTHER PARTIES. CARRIER JOHNSON MAKES NO REPRESENTATION AS TO THE ACCURACY AND/OR COMPLETENESS OF THE INFORMATION CARRIER JOHNSON CANNOT AND DOES NOT WARRANT THE QUESTIONS WHICH MAY BE INCORPORATED THEREIN AS A RESULT. FUTURE CONSTRUCTION PLANNING MUST INCLUDE FIELD CONFIRMATION OF EXISTING CONDITIONS.

ONTARIO PD:: HEADQUARTERS

2534 S. ARCHIBALD AVE., ONTARIO, CALIFORNIA 91761

Field Order #13 07.01.03
5 Addendum 5 04.21.2003
3 Addendum 3
2 Addendum 2/Bldg. Dept. Re-Submittal 03.20.2003
Building Dept. Submittal 02.24.2003

ISSUES:
DIRECTORY/FILE NUMBER: 4511-A4.3
XREF'S DRAWINGS:
PROJECT NUMBER: 4511.00
DRAWN BY: CHECKED BY:
DATE: 2/24/03
SCALE: AS NOTED

TITLE:
ENLARGED FLOOR PLANS

DRAWING NO:
A4.3 2

ALL IDEAS, DESIGN, ARRANGEMENTS AND PLANS INDICATED OR REPRESENTED BY THIS DRAWING ARE AND SHALL REMAIN THE PROPERTY OF CARRIER JOHNSON AND SHALL NOT BE USED IN WHOLE OR IN PART FOR ANY PURPOSE WHATSOEVER WITHOUT THE WRITTEN PERMISSION OF CARRIER JOHNSON. ALL IDEAS, DESIGN, ARRANGEMENTS OR PLANS SHALL NOT BE DISCLOSED TO ANY PERSON, FIRM OR CORPORATION FOR ANY PURPOSE WHATSOEVER WITHOUT THE WRITTEN PERMISSION OF CARRIER JOHNSON. IN THE EVENT OF UNAUTHORIZED DISCLOSURE OR USE OF SUCH IDEAS, DESIGN, ARRANGEMENTS OR PLANS, CARRIER JOHNSON SHALL BE ENTITLED TO ALL REMEDIES AVAILABLE AT LAW OR IN EQUITY, INCLUDING, BUT NOT LIMITED TO, THE RIGHT TO RECOVER ALL DAMAGES, COSTS AND ATTORNEYS' FEES ARISING FROM SUCH UNAUTHORIZED DISCLOSURE OR USE. ALL IDEAS, DESIGN, ARRANGEMENTS AND PLANS INDICATED OR REPRESENTED BY THIS DRAWING ARE AND SHALL REMAIN THE PROPERTY OF CARRIER JOHNSON AND SHALL NOT BE USED IN WHOLE OR IN PART FOR ANY PURPOSE WHATSOEVER WITHOUT THE WRITTEN PERMISSION OF CARRIER JOHNSON. IN THE EVENT OF UNAUTHORIZED DISCLOSURE OR USE OF SUCH IDEAS, DESIGN, ARRANGEMENTS OR PLANS, CARRIER JOHNSON SHALL BE ENTITLED TO ALL REMEDIES AVAILABLE AT LAW OR IN EQUITY, INCLUDING, BUT NOT LIMITED TO, THE RIGHT TO RECOVER ALL DAMAGES, COSTS AND ATTORNEYS' FEES ARISING FROM SUCH UNAUTHORIZED DISCLOSURE OR USE. THESE PLANS AND SPECIFICATIONS ARE COPYRIGHTED AND ONLY FOR USE ON THIS PROJECT. THEY SHALL NOT BE LOANED, COPIED OR DISCLOSED TO ANY PERSON, FIRM OR CORPORATION FOR ANY PURPOSE WHATSOEVER WITHOUT THE WRITTEN PERMISSION OF CARRIER JOHNSON. FILING THESE DRAWINGS OR SPECIFICATIONS WITH ANY PUBLIC AGENCY IS NOT A PUBLICATION OF SAME. NO COPYING, REPRODUCTION OR USE THEREOF IS PERMISSIBLE WITHOUT THE CONSENT OF CARRIER JOHNSON.

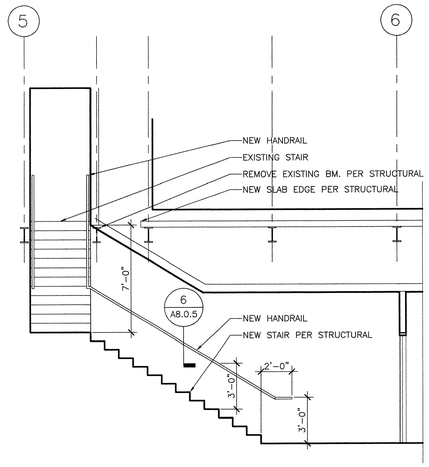

STAIR NO 1 SECTION 5
1/4"=1'-0"

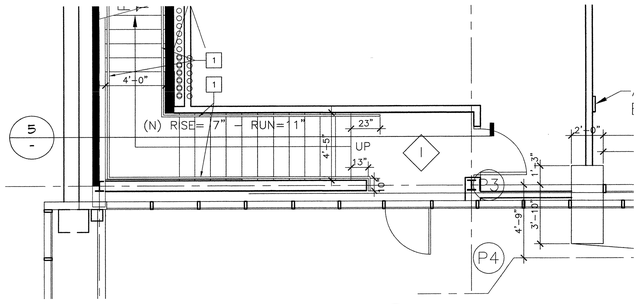

ALTERED STAIR NO 1 FIRST LEVEL PLAN 1
1/4"=1'-0"

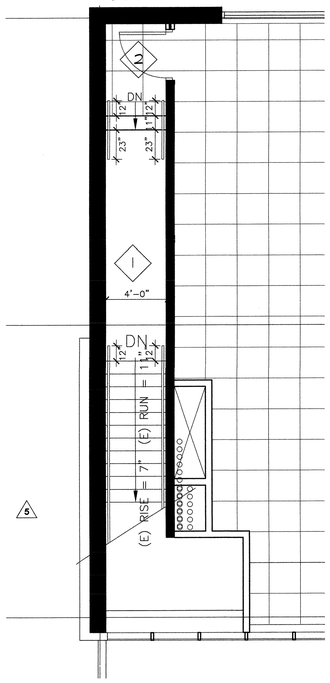

ALTERED STAIR NO 1 SECOND LEVEL PLAN 2
1/4"=1'-0"

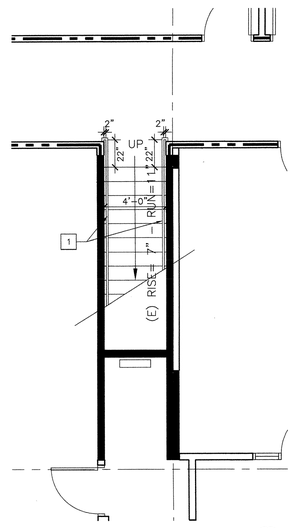

EXISTING STAIR NO 3 FIRST LEVEL PLAN 6
1/4"=1'-0"

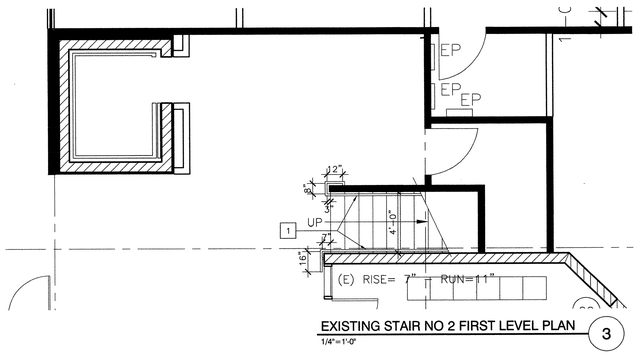

EXISTING STAIR NO 2 FIRST LEVEL PLAN 3
1/4"=1'-0"

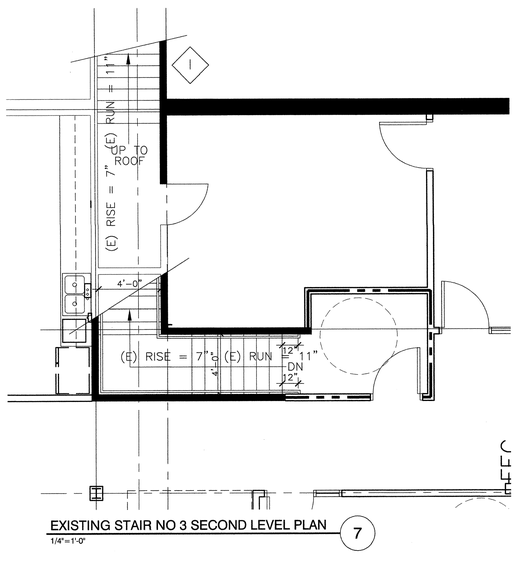

EXISTING STAIR NO 3 SECOND LEVEL PLAN 7
1/4"=1'-0"

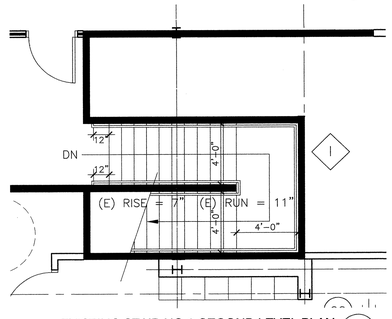

EXISTING STAIR NO 2 SECOND LEVEL PLAN 4
1/4"=1'-0"

PLAN KEY NOTES

1 NEW STAIR HANDRAIL (6 / A8.0.5)

2 ACCESS FLOORING DETAILS REFER TO SHEET A8.0.6.

CARRIER JOHNSON

ARCHITECTURE
INTERIOR DESIGN
PLANNING

GORDON R. CARRIER AIA
MICHAEL C. JOHNSON AIA

WILLIAM C. BOOSEN AIA
DEBORAH P. ELLIOTT IIDA

2600 MICHELSON DRIVE
SUITE 400
IRVINE, CALIFORNIA
92612

TEL 949 955-2353
FAX 949 955-2377

1301 THIRD AVENUE
SAN DIEGO, CALIFORNIA
92101

TEL 619 239-2353
FAX 619 239-6227

RECORD DOCUMENTS
THESE DOCUMENTS RELEASED BY CARRIER JOHNSON FOR USE, AS RECORD DOCUMENTS WILL SHOW THE REPORTED LOCATION OF THE WORK AS RECEIVED FROM THE CONTRACTOR DURING THE CONSTRUCTION PROCESS, AND ARE BASED ON UNVERIFIED INFORMATION PROVIDED BY THE CONTRACTOR UNLESS OTHERWISE NOTED. CONTRACTOR SHALL BE AWARE THAT THE ACCURACY AND/OR COMPLETENESS OF THIS INFORMATION CANNOT AND DOES NOT WARRANT THE ADEQUACY OF ALL CONDITIONS AND DIMENSIONS TO BE FIELD VERIFIED BY CONTRACTOR AS A RESULT. FUTURE CONSTRUCTION PLANNING MUST INCLUDE FIELD CONFIRMATION OF EXISTING CONDITIONS.

ONTARIO PD:: HEADQUARTERS

2534 S. ARCHIBALD AVE., ONTARIO, CALIFORNIA 91761

Field Order #13 07.01.03
5 Addendum 5 04.21.2003
3 Addendum 3
2 Addendum 2/Bldg. Dept. Re-Submittal 03.20.2003
Building Dept. Submittal 02.24.2003
ISSUES:
DIRECTORY/FILE NUMBER: 4511-A44

XREF'S DRAWINGS:

PROJECT NUMBER:
4511.00
DRAWN BY: CHECKED BY:

DATE:

SCALE:
AS NOTED

TITLE:
ENLARGED FLOOR PLANS

DRAWING NO:
A4.4 2

ALL IDEAS, DESIGN, ARRANGEMENTS AND PLANS INDICATED OR REPRESENTED BY THIS DRAWING ARE OWNED BY, AND THE PROPERTY OF CARRIER JOHNSON AND WERE CREATED, EVOLVED AND DEVELOPED FOR USE ON, AND IN CONNECTION WITH THIS PROJECT. NONE OF SUCH IDEAS, DESIGN, ARRANGEMENTS, OR PLANS SHALL BE USED BY, OR DISCLOSED TO, ANY PERSON, FIRM, OR CORPORATION FOR ANY PURPOSE WHATSOEVER WITHOUT THE WRITTEN PERMISSION OF CARRIER JOHNSON. FILING THESE DRAWINGS OR SPECIFICATIONS WITH ANY PUBLIC AGENCY IS NOT A PUBLICATION OF SAME. NO COPYING, REPRODUCTION OR USE THEREOF IS PERMISSIBLE WITHOUT THE CONSENT OF CARRIER JOHNSON.

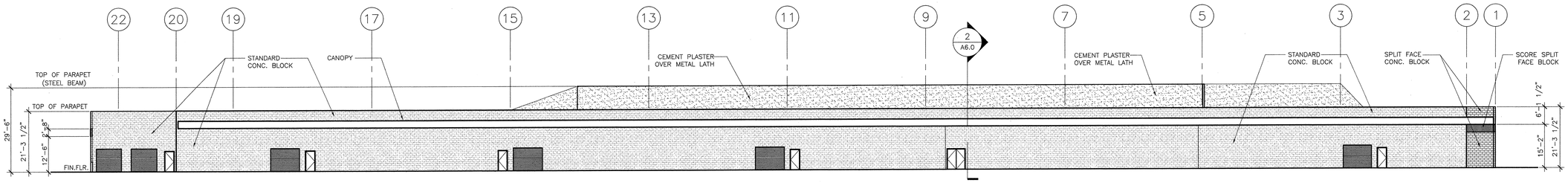

EXISTING WEST ELEVATION
1/16"=1'-0" — 4

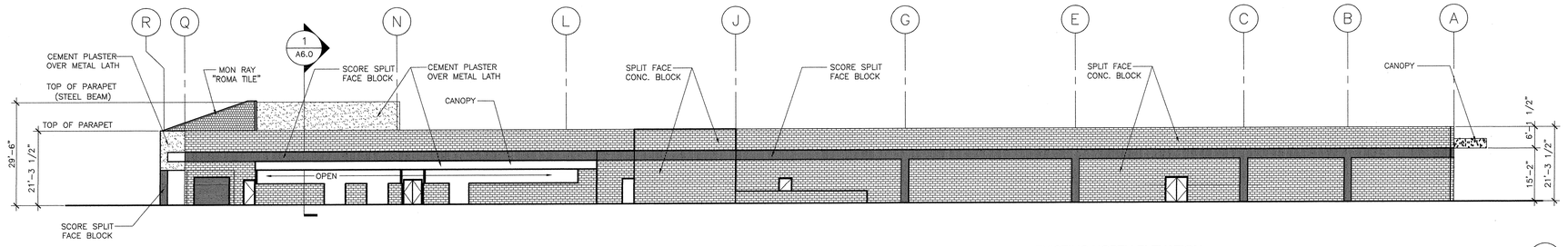

EXISTING NORTH ELEVATION
1/16"=1'-0" — 3

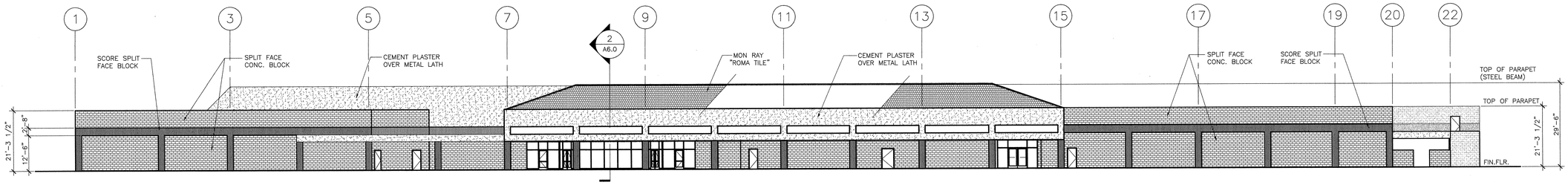

EXISTING EAST ELEVATION
1/16"=1'-0" — 2

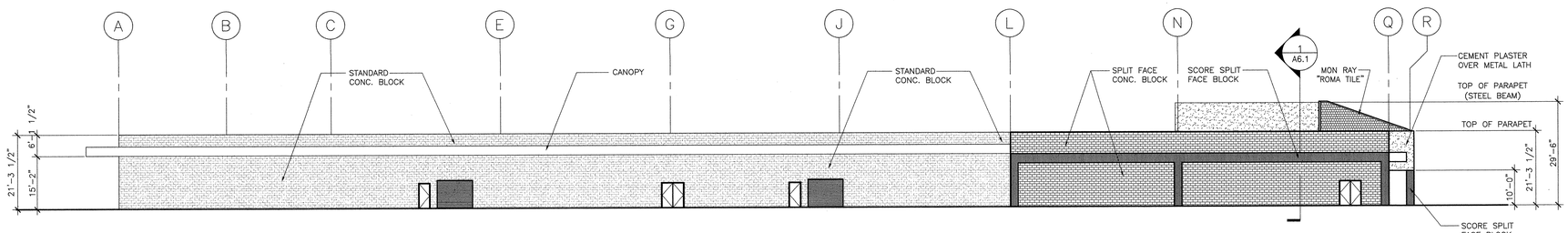

EXISTING SOUTH ELEVATION
1/16"=1'-0" — 1

ARCHITECTURE
INTERIOR DESIGN
PLANNING

CARRIER JOHNSON

GORDON R. CARRIER AIA
MICHAEL C. JOHNSON AIA

WILLIAM C. BOCKEN AIA
DEBORAH P. ELLIOTT IIDA

2600 MICHELSON DRIVE
SUITE 400
IRVINE, CALIFORNIA
92612

TEL 949 955-2353
FAX 949 955-2377

1301 THIRD AVENUE
SAN DIEGO, CALIFORNIA
92101

TEL 619 239-2353
FAX 619 239-6227

RECORD DOCUMENTS
THESE DOCUMENTS RELEASED BY CARRIER JOHNSON FOR USE AS RECORD DOCUMENTS WILL SHOW THE REPORTED LOCATION OF FIELD WORK AND DESIGN CHANGES THAT WERE MADE DURING THE CONSTRUCTION PROCESS, AND ARE BASED ON UNVERIFIED INFORMATION PROVIDED BY THE CONTRACTOR AND OTHER PARTIES. WHILE THIS INFORMATION IS BELIEVED TO BE ACCURATE, CARRIER JOHNSON CANNOT AND DOES NOT WARRANT THE ACCURACY AND/OR COMPLETENESS OF THIS INFORMATION AND SHALL NOT BE RESPONSIBLE FOR ANY ERRORS OR OMISSIONS WHICH MAY BE CONTAINED IN THESE AS A RESULT. FUTURE CONSTRUCTION PLANNING MUST INCLUDE FIELD CONFIRMATION OF EXISTING CONDITIONS.

ONTARIO PD:: HEADQUARTERS

2534 S. ARCHIBALD AVE., ONTARIO, CALIFORNIA 91761

Field Order #13 07.01.03
5 Addendum 5 04.21.2003
3 Addendum 3
2 Addendum 2/Bldg. Dept. Re-Submittal 03.20.2003
Building Dept. Submittal 02.24.2003

ISSUES:
DIRECTORY/FILE NUMBER: 4511.00
XREF'S DRAWINGS:
PROJECT NUMBER: 4511.00
DRAWN BY: CHECKED BY:
DATE: 1/23/03
SCALE: 1/16" = 1'-0"

TITLE:
OVERALL EXISTING BUILDING ELEVATION

DRAWING NO:
A5.1

ALL IDEAS, DESIGN, ARRANGEMENTS, OR PLANS SHALL BE USED BY, OR DISCLOSED TO ANY PERSON, FIRM, OR CORPORATION FOR ANY PURPOSE WHATSOEVER WITHOUT THE WRITTEN PERMISSION OF CARRIER JOHNSON. FILING THESE DRAWINGS OR SPECIFICATIONS WITH ANY PUBLIC AGENCY IS NOT A PUBLICATION OF SAME. NO COPYING, REPRODUCTION OR USE THEREOF IS PERMISSIBLE WITHOUT THE CONSENT OF CARRIER JOHNSON.

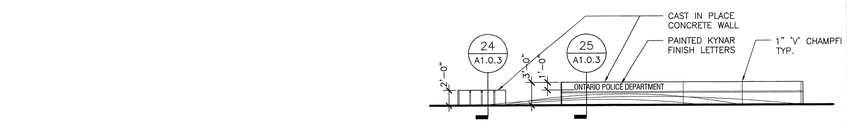

ENTRY WALL ELEVATION
1/8"=1'-0" 3

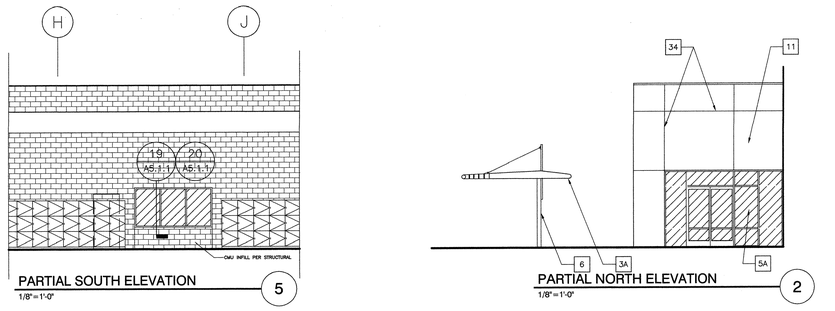

PARTIAL SOUTH ELEVATION
1/8"=1'-0" 5

PARTIAL NORTH ELEVATION
1/8"=1'-0" 2

EAST ELEVATION CONTINUED
1/8"=1'-0" 1

EAST ELEVATION
1/8"=1'-0" 1

PLAN KEY NOTES

1. FINISH GRADE PER CIVIL
2. STRUCTURE PER STRUCTURAL
3. METAL PANEL
4. A: WINDOW WALL SYSTEM B: CURTAIN WALL SYSTEM
5. GLAZING 5A 5B 5C
6. PAINTED STEEL
7. CONCRETE BENCH
8. CONCRETE PORTAL
9. WOOD BENCH
10. WOOD WAINSCOT
11. PAINTED PLASTER
12. PAINTED PLASTER SOFFIT
13. GYPSUM BOARD
14. CEILING TILE SYSTEM
15. METAL STUD FRAMING
16. ROOF STRUCTURE PER STRUCTURAL
17. SKYLIGHT
18. PAINTED STEEL FENCE (ADD ALTERNATE #6)
19. PAINTED STEEL AND ACRYLIC PANEL FENCE (ADD ALTERNATE #6)
20. PAINTED STEEL AND ACRYLIC PANEL GATE (ADD ALTERNATE #6)
21. CMU PILASTER (ADD ALTERNATE #6)
22. CMU WALL (ADD ALTERNATE #6)
23. LIGHT FIXTURE PER ELECTRICAL (SISTEMALUX BLITZ-2 WINDOW W/ WIDE BEAM LENSES S.4061)
24. PAINTED METAL FLASHING CAP
25. ROOFING SYSTEM
26. RAISED FLOOR
27. PAINTED STEEL RAIL
28. SIGNAGE
29. BREAK METAL
30. METAL PANEL JOINT (3 / A8.1.2) DIMENSIONS ARE TO CENTER OF JOINT
31. SYSMIC JOINT
32. CONCRETE PANEL JOINT
33. TIE HOLE
34. PLASTER REVEAL (7 / A8.1.1)
35. BUTT GLAZING
36. SEISMIC EXPANSION JOINT
37. GUTTER
38. EXISTING CMU
39. PAINTED STEEL ANGLE PER STRUCTURAL
40. PAINTED STEEL AND ACRYLIC PANEL ROLLING GATES
41. PAINTED PLASTER SOFFIT
42. INFILL EXISTING PLANTERS W/ METAL FRAMING, PLYWOOD SUBSTRATE, WATERPROOF MEMBRANE, AND PAINTED PLASTER
43. PAINTED PLASTER SOFFIT
44. BUILDING ADDRESS IN 12" HIGH RAISED ALUMINUM LETTERS
45.
46.
47.
48.
49.
50.

GENERAL NOTES

'S' INDICATES SECURITY WINDOW FILM

'T' INDICATES TEMPEREED GLASS REQUIRED

ARCHITECTURE
INTERIOR DESIGN
PLANNING

CARRIER JOHNSON

GORDON R. CARRIER AIA
MICHAEL C. JOHNSON AIA

WILLIAM C. BOCKEN AIA
DEBORAH P. ELLIOTT IIDA

2600 MICHELSON DRIVE
SUITE 400
IRVINE, CALIFORNIA
92612

TEL 949 955-2353
FAX 949 955-2377

1301 THIRD AVENUE
SAN DIEGO, CALIFORNIA
92101

TEL 619 239-2353
FAX 619 239-6227

RECORD DOCUMENTS:
THESE DOCUMENTS ARE PROVIDED BY CARRIER JOHNSON FOR USE AS RECORD DOCUMENTS WILL SHOW THE REPORTED LOCATION OF THE WORK AND SIGNIFICANT CHANGES MADE DURING THE CONSTRUCTION PROCESS, AND ARE BASED ON MARKED-UP DRAWINGS PROVIDED TO THE CONTRACTOR AND OTHER PARTIES WHICH WILL BE ASSUMED RELIABLE. CARRIER JOHNSON CANNOT AND DOES NOT WARRANT THE ACCURACY AND COMPLETENESS OF THESE DOCUMENTS AND SHALL NOT BE RESPONSIBLE FOR ANY ERRORS OR OMISSIONS WHICH MAY BE INCORPORATED THEREIN AS A RESULT OF FUTURE CONSTRUCTION PLANNING MUST INCLUDE FIELD CONFIRMATION OF EXISTING CONDITIONS.

ONTARIO PD: HEADQUARTERS

2534 S. ARCHIBALD AVE., ONTARIO, CALIFORNIA 91761

Field Order #13, 07.01.03
5 Addendum 5 04.21.2003
3 Addendum 3
2 Addendum 2/Bldg. Dept. Re-Submittal 03.20.2003
Building Dept. Submittal 02.24.2003

ISSUES:
DIRECTORY/FILE NUMBER: 4511-A511
XREF'S DRAWINGS:
PROJECT NUMBER: 4511.00
DRAWN BY: CHECKED BY:
DATE: 1/23/03
SCALE: AS NOTED
TITLE: BUILDING ELEVATIONS

DRAWING NO: A5.1.1

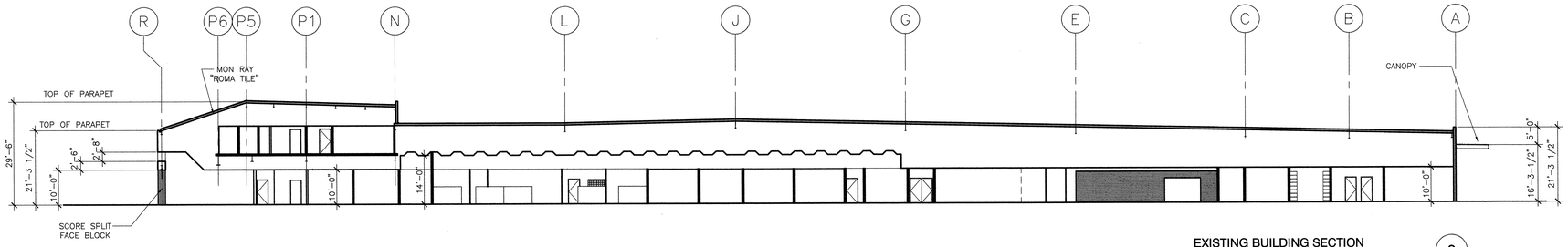

EXISTING BUILDING SECTION 2
1/16"=1'-0"

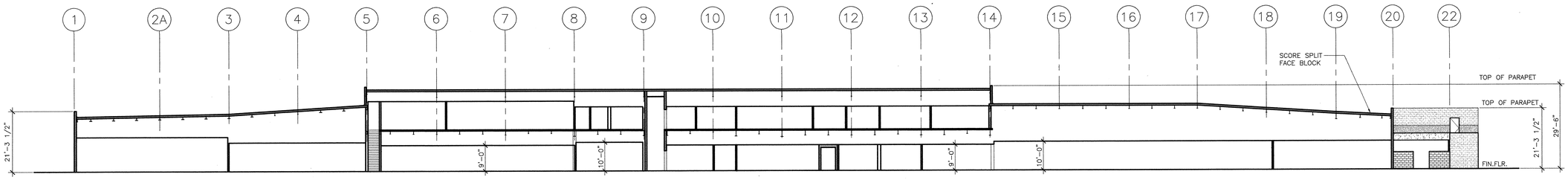

EXISTING BUILDING SECTION 1
1/16"=1'-0"

ALL IDEAS, DESIGN, ARRANGEMENTS, OR PLANS INDICATED OR REPRESENTED BY THIS DRAWING, AND THE PROPERTY RIGHTS PERTAINING THEREIN, ARE THE PROPERTY OF CARRIER JOHNSON. NO PROPERTY RIGHTS IN SUCH IDEAS, DESIGN, ARRANGEMENTS, OR PLANS SHALL BE USED BY, OR DISCLOSED TO ANY PERSON, FIRM, OR CORPORATION FOR ANY PURPOSE WHATSOEVER WITHOUT THE WRITTEN PERMISSION OF CARRIER JOHNSON. FILING THESE DRAWINGS OR SPECIFICATIONS WITH ANY PUBLIC AGENCY IS NOT A PUBLICATION OF SAME. NO COPYING, REPRODUCTION OR USE THEREOF IS PERMISSIBLE WITHOUT THE CONSENT OF CARRIER JOHNSON.

CARRIER JOHNSON

ARCHITECTURE
INTERIOR DESIGN
PLANNING

GORDON R. CARRIER AIA
MICHAEL C. JOHNSON AIA

WILLIAM C. BOCKEN AIA
DEBORAH P. ELLIOTT IIDA

2600 MICHELSON DRIVE
SUITE 400
IRVINE, CALIFORNIA
92612

TEL 949 955-2353
FAX 949 955-2377

1301 THIRD AVENUE
SAN DIEGO, CALIFORNIA
92101

TEL 619 239-2353
FAX 619 239-6227

RECORD DOCUMENTS

THESE DOCUMENTS RELEASED BY CARRIER JOHNSON FOR USE AS RECORD DOCUMENTS WILL SHOW THE REPORTED LOCATION OF THE WORK AND SIGNIFICANT CHANGES MADE DURING THE CONSTRUCTION PROCESS, AND ARE BASED ON UNVERIFIED INFORMATION PROVIDED BY THE CONTRACTOR AND OTHER PARTIES WHICH WILL BE ASSUMED RELIABLE. CARRIER JOHNSON CANNOT AND DOES NOT WARRANT THE ACCURACY AND/OR COMPLETENESS OF THIS INFORMATION AND SHALL NOT BE RESPONSIBLE FOR ANY ERRORS OR OMISSIONS WHICH MAY BE INCORPORATED THEREIN AS A RESULT. FUTURE CONSTRUCTION PLANNING MUST INCLUDE FIELD CONFIRMATION OF EXISTING CONDITIONS.

ONTARIO PD:: HEADQUARTERS

2534 S. ARCHIBALD AVE., ONTARIO, CALIFORNIA 91761

F13 Field Order #13 07.01.03
5 Addendum 5 04.21.2003
3 Addendum 3
2 Addendum 2/Bldg. Dept. Re-Submittal 03.20.2003
Building Dept. Submittal 02.24.2003

ISSUES:
DIRECTORY/FILE NUMBER: 4511-A610
XREF'S DRAWINGS:
PROJECT NUMBER: 4511.00
DRAWN BY: CHECKED BY:
DATE: 1/23/03
SCALE: AS NOTED
TITLE: EXISTING BUILDING SECTIONS

DRAWING NO: A6.0

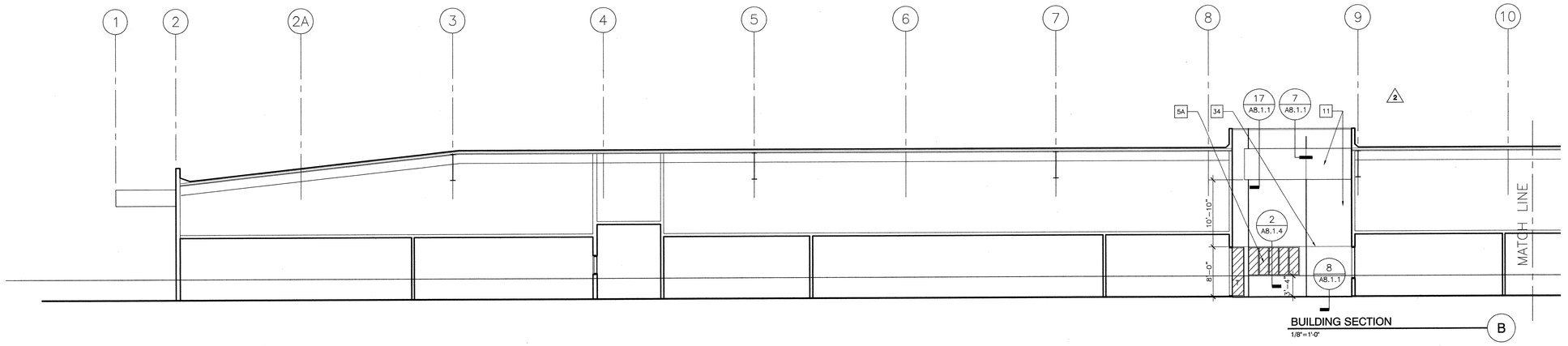

BUILDING SECTION
1/8"=1'-0"

B

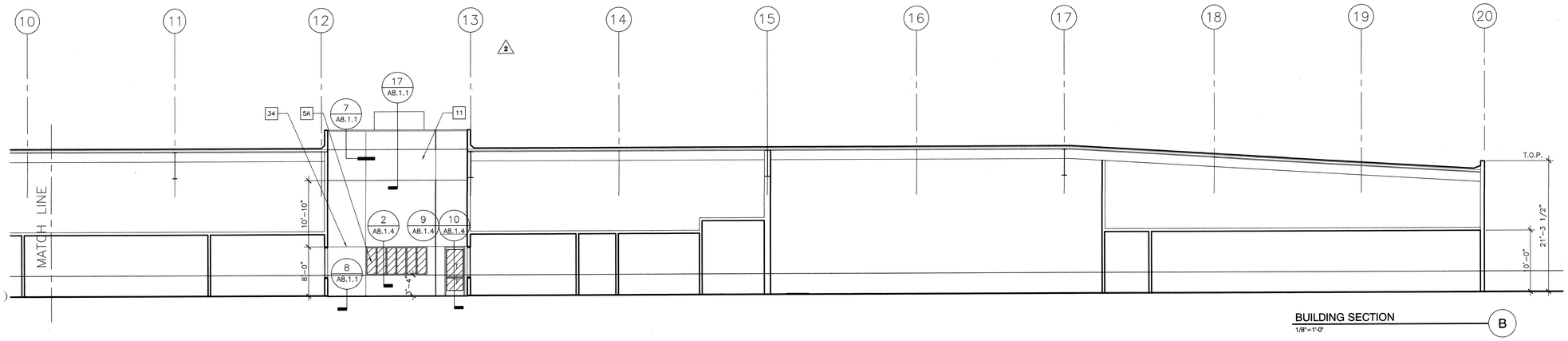

BUILDING SECTION
1/8"=1'-0"

B

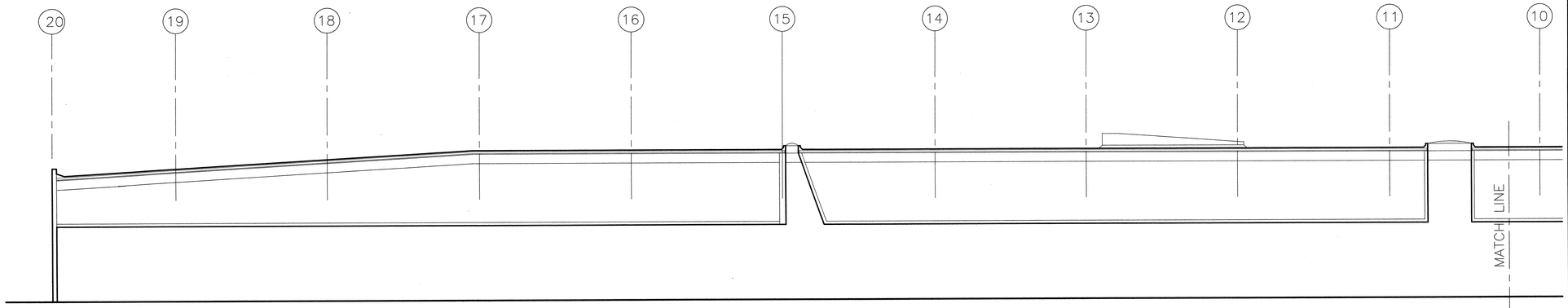

BUILDING SECTION
1/8"=1'-0"

A

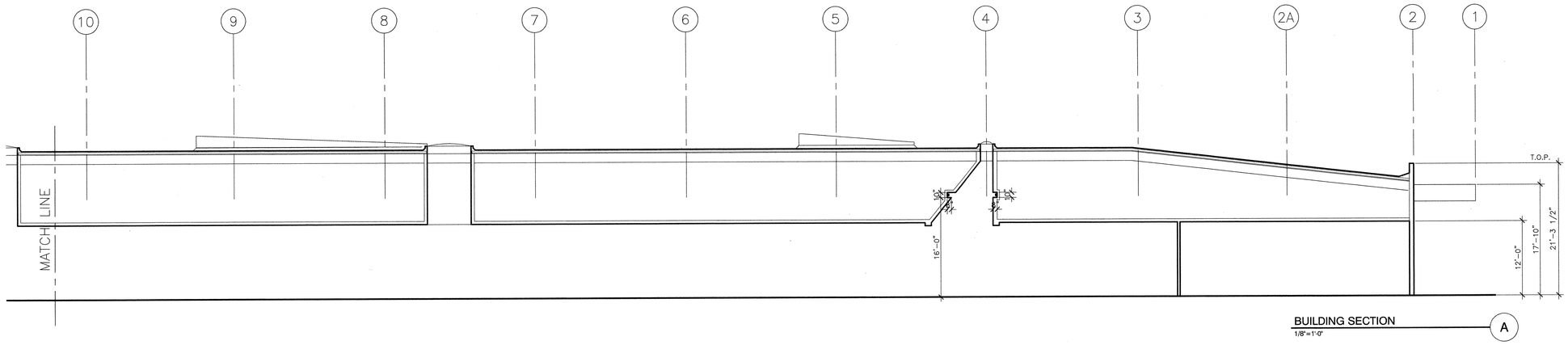

BUILDING SECTION
1/8"=1'-0"

A

PLAN KEY NOTES

1. FINISH GRADE PER CIVIL
2. STRUCTURE PER STRUCTURAL
3. METAL PANEL
4. A: WINDOW WALL SYSTEM B: CURTAIN WALL SYSTEM
5. GLAZING 5A 5B 5C
6. PAINTED STEEL
7. CONCRETE BENCH
8. CONCRETE PORTAL
9. WOOD BENCH
10. WOOD WAINSCOT
11. PAINTED PLASTER
12. PAINTED PLASTER SOFFIT
13. GYPSUM BOARD
14. CEILING TILE SYSTEM
15. METAL STUD FRAMING
16. ROOF STRUCTURE PER STRUCTURAL
17. SKYLIGHT
18. PAINTED STEEL FENCE (ADD ALTERNATE #6)
19. PAINTED STEEL AND ACRYLIC PANEL FENCE (ADD ALTERNATE #6)
20. PAINTED STEEL AND ACRYLIC PANEL GATE (ADD ALTERNATE #6)
21. CMU PILASTER (ADD ALTERNATE #6)
22. CMU WALL (ADD ALTERNATE #6)
23. LIGHT FIXTURE PER ELECTRICAL (SISTEMALUX BLITZ-2 WINDOW W/ WIDE BEAM LENSES S.4061)
24. PAINTED METAL FLASHING CAP
25. ROOFING SYSTEM
26. RAISED FLOOR
27. PAINTED STEEL RAIL
28. SIGNAGE
29. BREAK METAL
30. METAL PANEL JOINT (3 / A8.1.2) DIMENSIONS ARE TO CENTER OF JOINT
31. SYSMIC JOINT
32. CONCRETE PANEL JOINT
33. TIE HOLE
34. PLASTER REVEAL (7 / A8.1.1)
35. BUTT GLAZING
36. SEISMIC EXPANSION JOINT
37. GUTTER
38. EXISTING CMU
39. PAINTED STEEL ANGLE PER STRUCTURAL
40. PAINTED STEEL AND ACRYLIC PANEL ROLLING GATES
41. PAINTED PLASTER SOFFIT
42. INFILL EXISTING PLANTERS W/ METAL FRAMING, PLYWOOD SUBSTRATE, WATERPROOF MEMBRANE, AND PAINTED PLASTER
43. PAINTED PLASTER SOFFIT
44. BUILDING ADDRESS IN 12" HIGH RAISED ALUMINUM LETTERS
45.
46.
47.
48.
49.
50.

GENERAL NOTES

'S' INDICATES SECURITY WINDOW FILM

'T' INDICATES TEMPEREED GLASS REQUIRED

CARRIER JOHNSON

ARCHITECTURE
INTERIOR DESIGN
PLANNING

GORDON R. CARRIER AIA
MICHAEL C. JOHNSON AIA

WILLIAM C. BOCKEN AIA
DEBORAH P. ELLIOTT IIDA

2600 MICHELSON DRIVE
SUITE 400
IRVINE, CALIFORNIA
92612

TEL 949 955-2353
FAX 949 955-2377

1301 THIRD AVENUE
SAN DIEGO, CALIFORNIA
92101

TEL 619 239-2353
FAX 619 239-6227

RECORD DOCUMENTS

THESE DOCUMENTS RELEASED BY CARRIER JOHNSON FOR USE AS RECORD DOCUMENTS WILL SHOW THE REPORTED LOCATION OF THE WORK AS KNOWN TO CARRIER JOHNSON DURING THE CONSTRUCTION PROCESS, AND ARE BASED ON UNVERIFIED INFORMATION PROVIDED BY THE CONTRACTOR AND/OR OTHERS. THE CONTRACTOR MAY USE THESE DOCUMENTS AS CARRIER JOHNSON CANNOT AND DOES NOT WARRANT THE ACCURACY AND/OR COMPLETENESS OF THIS INFORMATION AND SHALL NOT BE RESPONSIBLE FOR ANY ERRORS OR OMISSIONS WHICH MAY BE CONTAINED IN THESE AS A RESULT. FUTURE CONSTRUCTION PLANNING MUST INCLUDE FIELD CONFIRMATION OF EXISTING CONDITIONS.

ONTARIO PD: HEADQUARTERS

2534 S. ARCHIBALD AVE., ONTARIO, CALIFORNIA 91761

FO3	Field Order #13 07.01.03
5	Addendum 5 04.21.2003
3	Addendum 3
2	Addendum 2/Bldg. Dept. Re-Submittal 03.20.2003

Building Dept. Submittal 02.24.2003

ISSUES:

DIRECTORY/FILE NUMBER: 4511-A611

XREF'S DRAWINGS:

PROJECT NUMBER: 4511.00

DRAWN BY: CHECKED BY:

DATE: 7/23/03

SCALE: AS NOTED

TITLE: BUILDING SECTIONS

DRAWING NO: A6.1.1

ALL IDEAS, DESIGN, ARRANGEMENTS AND PLANS INDICATED OR REPRESENTED BY THIS DRAWING ARE OWNED BY, AND THE PROPERTY OF CARRIER JOHNSON AND WERE CREATED, EVOLVED AND DEVELOPED FOR USE ON, AND IN CONNECTION WITH THIS PROJECT. NONE OF SUCH IDEAS, DESIGNS, ARRANGEMENTS OR PLANS SHALL BE USED BY OR DISCLOSED TO ANY PERSON, FIRM OR CORPORATION FOR ANY PURPOSE WHATSOEVER WITHOUT THE WRITTEN PERMISSION OF CARRIER JOHNSON. FILING THESE DRAWINGS OR SPECIFICATIONS WITH ANY PUBLIC AGENCY IS NOT A PUBLICATION OF SAME. NO COPYING, REPRODUCTION OR USE THEREOF IS PERMISSIBLE WITHOUT THE CONSENT OF CARRIER JOHNSON.

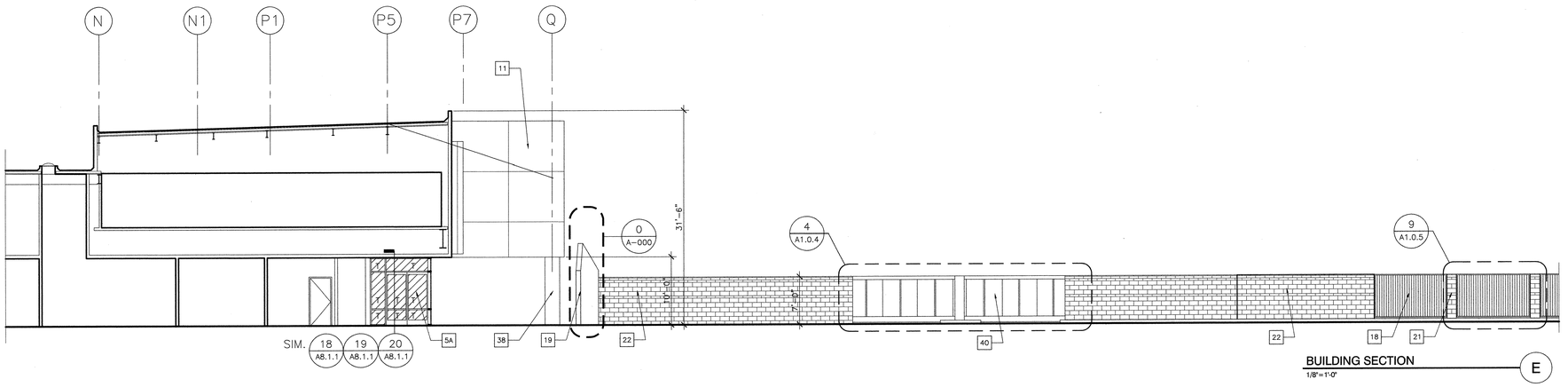

BUILDING SECTION
1/8"=1'-0"
E

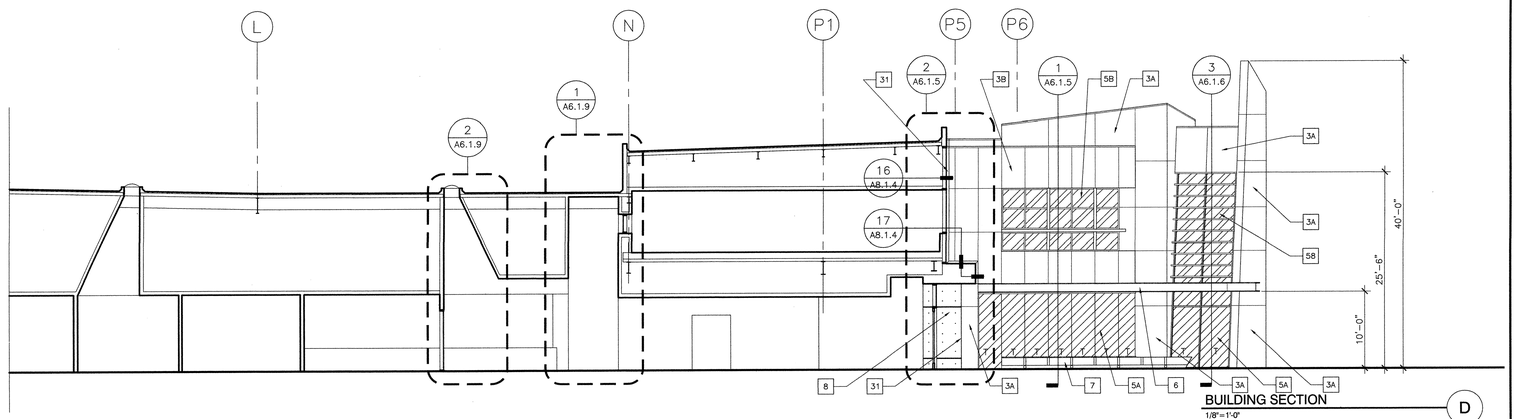

BUILDING SECTION
1/8"=1'-0"
D

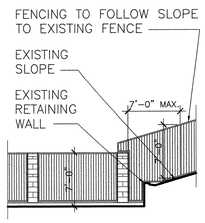

FENCE TRANSITION ELEVATION
1/8"=1'-0"
F

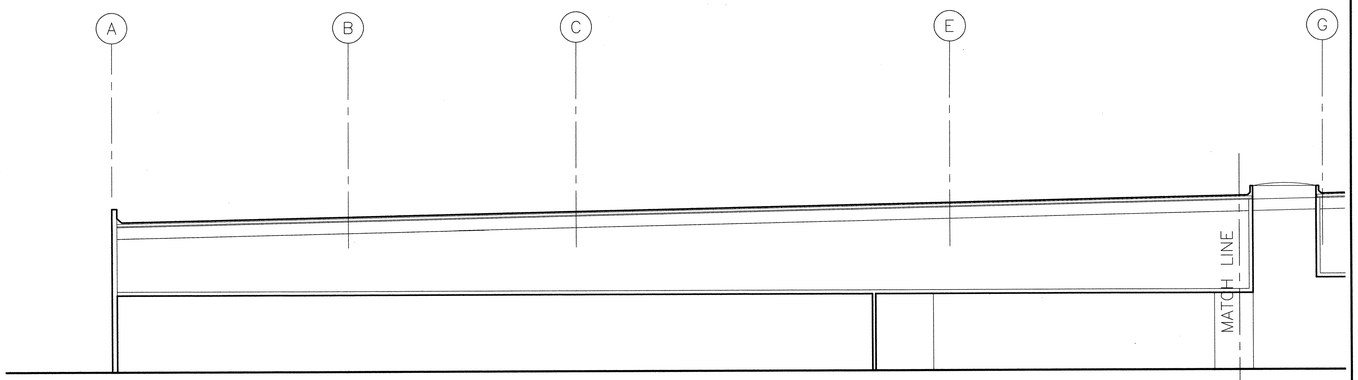

BUILDING SECTION
1/8"=1'-0"
C

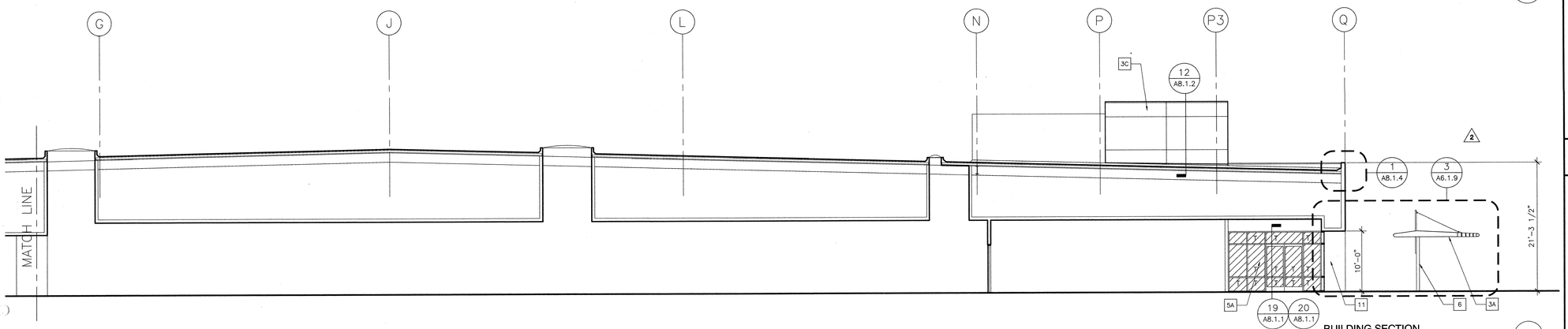

BUILDING SECTION
1/8"=1'-0"
C

PLAN KEY NOTES

1. FINISH GRADE PER CIVIL
2. STRUCTURE PER STRUCTURAL
3. METAL PANEL
4. A: WINDOW WALL SYSTEM B: CURTAIN WALL SYSTEM
5. GLAZING 5A 5B 5C
6. PAINTED STEEL
7. CONCRETE BENCH
8. CONCRETE PORTAL
9. WOOD BENCH
10. WOOD WAINSCOT
11. PAINTED PLASTER
12. PAINTED PLASTER SOFFIT
13. GYPSUM BOARD
14. CEILING TILE SYSTEM
15. METAL STUD FRAMING
16. ROOF STRUCTURE PER STRUCTURAL
17. SKYLIGHT
18. PAINTED STEEL FENCE (ADD ALTERNATE #6)
19. PAINTED STEEL AND ACRYLIC PANEL FENCE (ADD ALTERNATE #6)
20. PAINTED STEEL AND ACRYLIC PANEL GATE (ADD ALTERNATE #6)
21. CMU PILASTER (ADD ALTERNATE #6)
22. CMU WALL (ADD ALTERNATE #6)
23. LIGHT FIXTURE PER ELECTRICAL (SISTEMALUX BLITZ-2 WINDOW W/ WIDE BEAM LENSES S.4061)
24. PAINTED METAL FLASHING CAP
25. ROOFING SYSTEM
26. RAISED FLOOR
27. PAINTED STEEL RAIL
28. SIGNAGE
29. BREAK METAL
30. METAL PANEL JOINT (3 / A8.1.2) DIMENSIONS ARE TO CENTER OF JOINT
31. SYSMIC JOINT
32. CONCRETE PANEL JOINT
33. TIE HOLE
34. PLASTER REVEAL (7 / A8.1.1)
35. BUTT GLAZING
36. SEISMIC EXPANSION JOINT
37. GUTTER
38. EXISTING CMU
39. PAINTED STEEL ANGLE PER STRUCTURAL
40. PAINTED STEEL AND ACRYLIC PANEL ROLLING GATES
41. PAINTED PLASTER SOFFIT
42. INFILL EXISTING PLANTERS W/ METAL FRAMING, PLYWOOD SUBSTRATE, WATERPROOF MEMBRANE, AND PAINTED PLASTER
43. PAINTED PLASTER SOFFIT
44. BUILDING ADDRESS IN 12" HIGH RAISED ALUMINUM LETTERS
45.
46.
47.
48.
49.
50.

GENERAL NOTES

'S' INDICATES SECURITY WINDOW FILM

'T' INDICATES TEMPEREED GLASS REQUIRED

ARCHITECTURE
INTERIOR DESIGN
PLANNING

CARRIER JOHNSON

GORDON R. CARRIER AIA
MICHAEL C. JOHNSON AIA

WILLIAM C. BOCKEN AIA
DEBORAH F. ELLIOTT IIDA

2600 MICHELSON DRIVE
SUITE 400
IRVINE, CALIFORNIA
92612

TEL 949 955-2353
FAX 949 955-2377

1301 THIRD AVENUE
SAN DIEGO, CALIFORNIA
92101

TEL 619 239-2353
FAX 619 239-6227

RECORD DOCUMENTS
THESE DOCUMENTS RELEASED BY CARRIER JOHNSON FOR USE AS RECORD DOCUMENTS WILL SHOW ALL KNOWN AND LOCATION OF THE WORK AND SIGNIFICANT CHANGES MADE DURING THE CONSTRUCTION PROCESS, AND ARE BASED ON INFORMATION PROVIDED BY CONTRACTOR, SUBCONTRACTORS AND OTHER PARTIES WHICH WILL BE ASSUMED RELIABLE. CARRIER JOHNSON CANNOT AND DOES NOT WARRANT THE ACCURACY OF SUCH INFORMATION AND SHALL NOT BE RESPONSIBLE FOR ANY ERRORS OR OMISSIONS WHICH MAY BE INCORPORATED THEREIN AS A RESULT. FUTURE CONSTRUCTION CHANGES MUST INCLUDE FIELD CONFIRMATION OF EXISTING CONDITIONS.

ONTARIO PD:: HEADQUARTERS

2534 S. ARCHIBALD AVE., ONTARIO, CALIFORNIA 91761

4	Field Order #13 07.01.03
3	Addendum 5 04.21.2003
2	Addendum 3
1	Addendum 2/Bldg. Dept. Re-Submittal 03.20.2003

Building Dept. Submittal 02.24.2003

ISSUES:

DIRECTORY/FILE NUMBER: 4511-A612

XREF'S DRAWINGS:

PROJECT NUMBER: 4511.00

DRAWN BY: CHECKED BY:

DATE: 1/23/03

SCALE: AS NOTED

TITLE: BUILDING SECTIONS

DRAWING NO: A6.1.2

ALL IDEAS, DESIGN, ARRANGEMENTS AND PLANS INDICATED OR REPRESENTED BY THIS DRAWING ARE OWNED BY AND THE PROPERTY OF CARRIER JOHNSON AND WERE CREATED, EVOLVED AND DEVELOPED FOR USE ON AND IN CONNECTION WITH THE SPECIFIED PROJECT. NONE OF SUCH IDEAS, DESIGNS, ARRANGEMENTS OR PLANS SHALL BE USED BY OR DISCLOSED TO ANY PERSON, FIRM OR CORPORATION FOR ANY PURPOSE WHATSOEVER WITHOUT THE WRITTEN PERMISSION OF CARRIER JOHNSON. FILING THESE DRAWINGS OR SPECIFICATIONS WITH ANY PUBLIC AGENCY IS NOT A PUBLICATION OF SAME. NO COPYING, REPRODUCTION OR USE THEREOF IS PERMISSIBLE WITHOUT THE CONSENT OF CARRIER JOHNSON.

ALL IDEAS, DESIGN, ARRANGEMENTS, OR PLANS SHALL BE USED BY, OR DISCLOSED TO ANY PERSON, FIRM, OR CORPORATION FOR ANY PURPOSE WHATSOEVER WITHOUT THE WRITTEN PERMISSION OF CARRIER JOHNSON. FILING THESE DRAWINGS OR SPECIFICATIONS WITH ANY PUBLIC AGENCY IS NOT A PUBLICATION OF SAME. NO COPYING, REPRODUCTION OR USE THEREOF IS PERMISSIBLE WITHOUT THE CONSENT OF CARRIER JOHNSON.

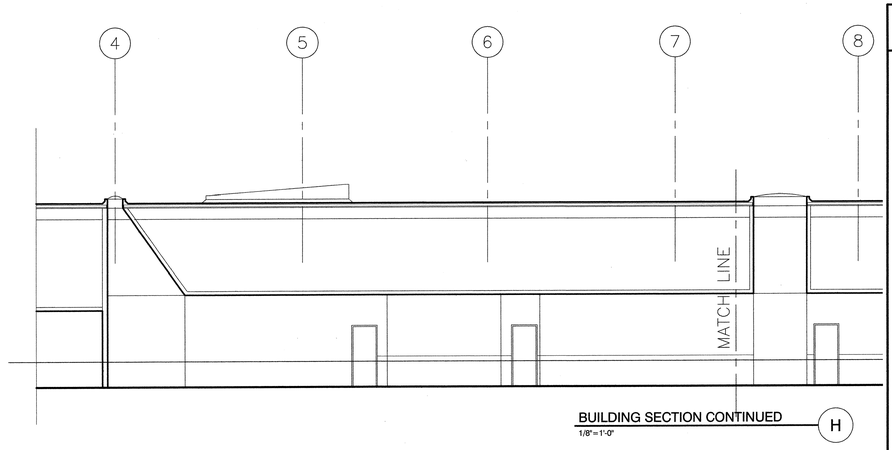

BUILDING SECTION CONTINUED
1/8"=1'-0"

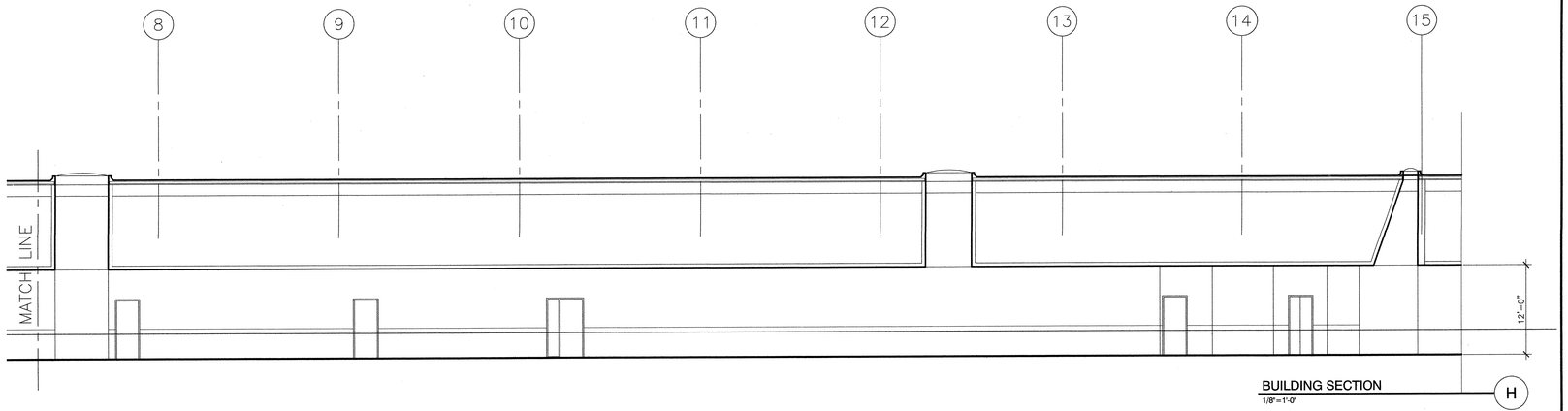

BUILDING SECTION
1/8"=1'-0"

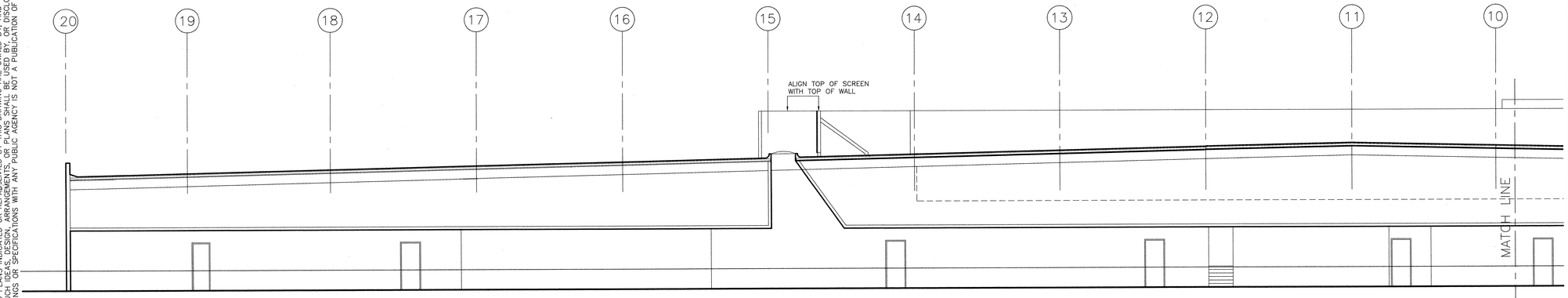

BUILDING SECTION CONTINUED
1/8"=1'-0"

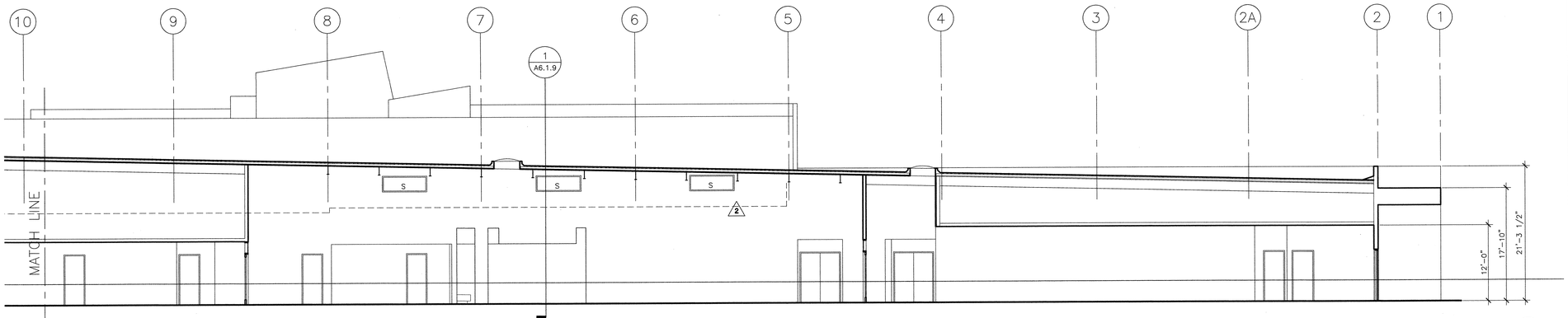

BUILDING SECTION
1/8"=1'-0"

PLAN KEY NOTES

1. FINISH GRADE PER CIVIL
2. STRUCTURE PER STRUCTURAL
3. METAL PANEL
4. A: WINDOW WALL SYSTEM B: CURTAIN WALL SYSTEM
5. GLAZING 5A 5B 5C
6. PAINTED STEEL
7. CONCRETE BENCH
8. CONCRETE PORTAL
9. WOOD BENCH
10. WOOD WAINSCOT
11. PAINTED PLASTER
12. PAINTED PLASTER SOFFIT
13. GYPSUM BOARD
14. CEILING TILE SYSTEM
15. METAL STUD FRAMING
16. ROOF STRUCTURE PER STRUCTURAL
17. SKYLIGHT
18. PAINTED STEEL FENCE (ADD ALTERNATE #6)
19. PAINTED STEEL AND ACRYLIC PANEL FENCE (ADD ALTERNATE #6)
20. PAINTED STEEL AND ACRYLIC PANEL GATE (ADD ALTERNATE #6)
21. CMU PILASTER (ADD ALTERNATE #6)
22. CMU WALL (ADD ALTERNATE #6)
23. LIGHT FIXTURE PER ELECTRICAL (SISTEMALUX BLITZ-2 WINDOW W/ WIDE BEAM LENSES S.4061)
24. PAINTED METAL FLASHING CAP
25. ROOFING SYSTEM
26. RAISED FLOOR
27. PAINTED STEEL RAIL
28. SIGNAGE
29. BREAK METAL
30. METAL PANEL JOINT (3 / A8.1.2) DIMENSIONS ARE TO CENTER OF JOINT
31. SYSMIC JOINT
32. CONCRETE PANEL JOINT
33. TIE HOLE
34. PLASTER REVEAL (7 / A8.1.1)
35. BUTT GLAZING
36. SEISMIC EXPANSION JOINT
37. GUTTER
38. EXISTING CMU
39. PAINTED STEEL ANGLE PER STRUCTURAL
40. PAINTED STEEL AND ACRYLIC PANEL ROLLING GATES
41. PAINTED PLASTER SOFFIT
42. INFILL EXISTING PLANTERS W/ METAL FRAMING, PLYWOOD SUBSTRATE, WATERPROOF MEMBRANE, AND PAINTED PLASTER
43. PAINTED PLASTER SOFFIT
44. BUILDING ADDRESS IN 12" HIGH RAISED ALUMINUM LETTERS
45.
46.
47.
48.
49.
50.

GENERAL NOTES

'S' INDICATES SECURITY WINDOW FILM

'T' INDICATES TEMPEREED GLASS REQUIRED

ARCHITECTURE
INTERIOR DESIGN
PLANNING

CARRIER JOHNSON

GORDON R. CARRIER AIA
MICHAEL C. JOHNSON AIA

WILLIAM C. BOCKEN AIA
DEBORAH P. ELLIOTT IIDA

2600 MICHELSON DRIVE
SUITE 400
IRVINE, CALIFORNIA
92612

TEL 949 955-2353
FAX 949 955-2377

1301 THIRD AVENUE
SAN DIEGO, CALIFORNIA
92101

TEL 619 239-2353
FAX 619 239-6227

RECORD DOCUMENTS
THESE DOCUMENTS RELEASED BY CARRIER JOHNSON FOR USE AS RECORD DOCUMENTS WILL REFLECT ALL KNOWN CHANGES MADE DURING THE CONSTRUCTION PROCESS, AND ARE BASED ON THE INFORMATION PROVIDED BY CONTRACTORS, SUBCONTRACTORS AND OTHER PARTIES WHICH WILL BE ASSUMED RELIABLE. CARRIER JOHNSON CANNOT AND DOES NOT WARRANT THE ACCURACY AND/OR COMPLETENESS OF THE INFORMATION AND ASSUMES NO RESPONSIBILITY FOR ANY ERRORS OR OMISSIONS WHICH MAY BE INCORPORATED THEREIN AS A RESULT. FUTURE CONSTRUCTION PLANNING MUST INCLUDE FIELD CONFIRMATION OF EXISTING CONDITIONS.

ONTARIO PD:: HEADQUARTERS

2534 S. ARCHIBALD AVE., ONTARIO, CALIFORNIA 91761

1 Field Order #13 07.01.03
5 Addendum 5 04.21.2003
3 Addendum 3
2 Addendum 2/Bldg. Dept. Re-Submittal 03.20.2003
Building Dept. Submittal 02.24.2003

ISSUES:
DIRECTORY/FILE NUMBER: 4511-A613
XREF'S DRAWINGS:
PROJECT NUMBER: 4511.00
DRAWN BY: CHECKED BY:
DATE: /23/03
SCALE: AS NOTED
TITLE: BUILDING SECTIONS

DRAWING NO:
A6.1.3

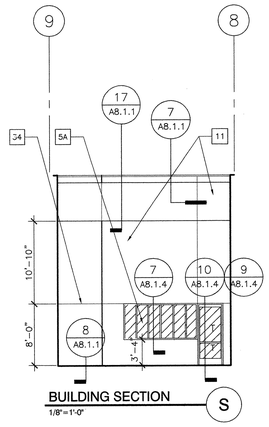

BUILDING SECTION S
1/8"=1'-0"

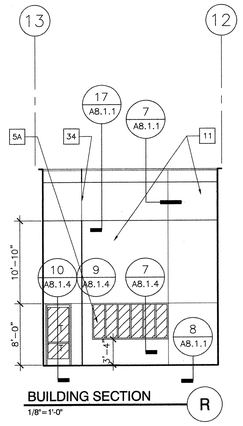

BUILDING SECTION R
1/8"=1'-0"

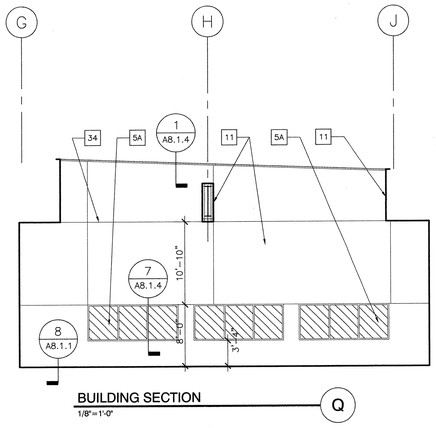

BUILDING SECTION Q
1/8"=1'-0"

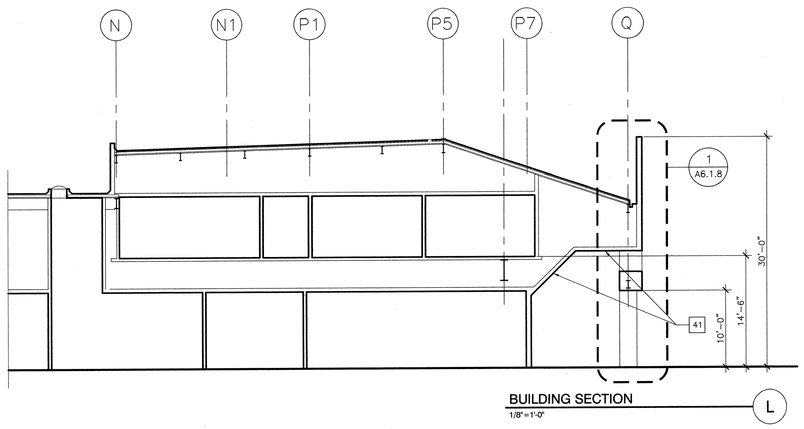

BUILDING SECTION L
1/8"=1'-0"

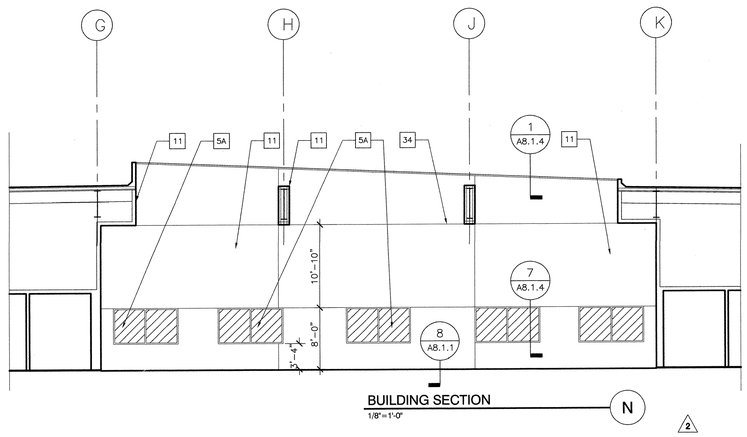

BUILDING SECTION N
1/8"=1'-0"

2

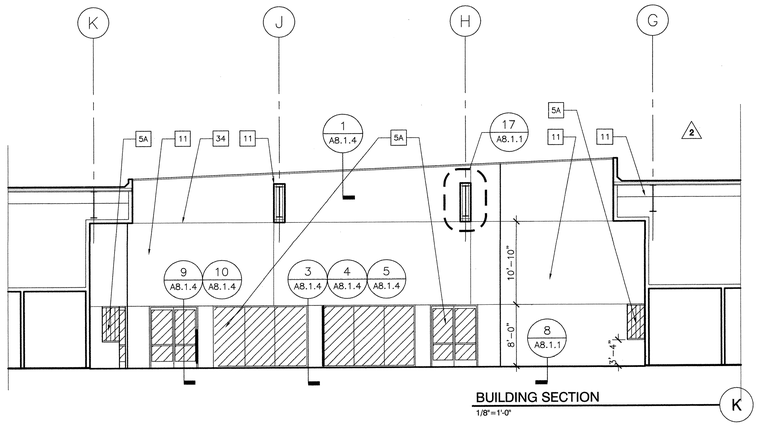

BUILDING SECTION K
1/8"=1'-0"

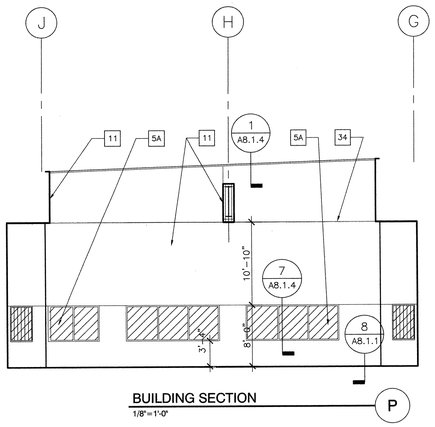

BUILDING SECTION P
1/8"=1'-0"

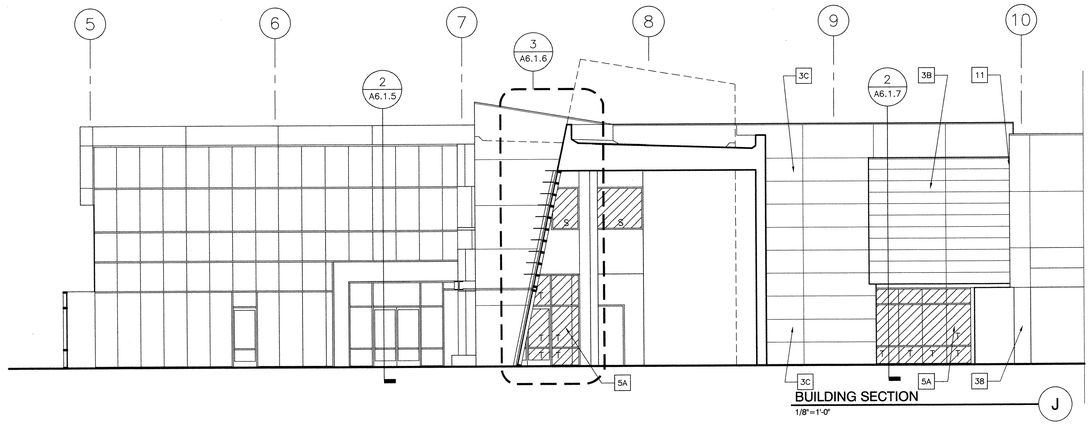

BUILDING SECTION J
1/8"=1'-0"

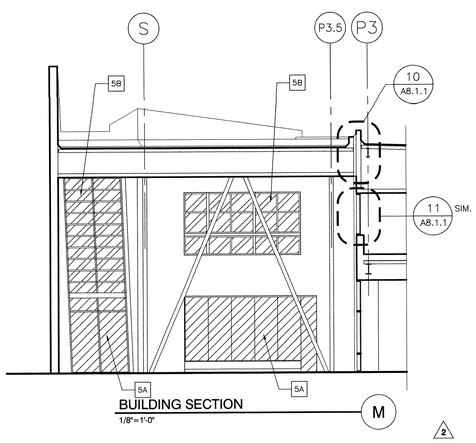

BUILDING SECTION M
1/8"=1'-0"

2

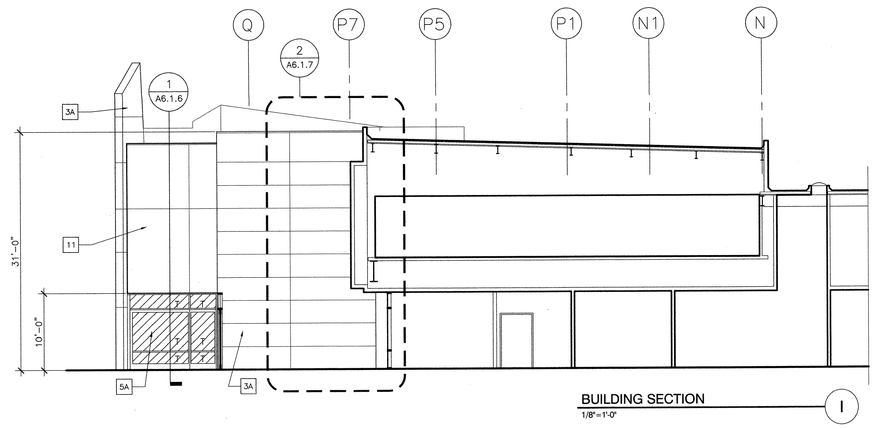

BUILDING SECTION I
1/8"=1'-0"

PLAN KEY NOTES

1. FINISH GRADE PER CIVIL
2. STRUCTURE PER STRUCTURAL
3. METAL PANEL
4. A: WINDOW WALL SYSTEM B: CURTAIN WALL SYSTEM
5. GLAZING 5A 5B 5C
6. PAINTED STEEL
7. CONCRETE BENCH
8. CONCRETE PORTAL
9. WOOD BENCH
10. WOOD WAINSCOT
11. PAINTED PLASTER
12. PAINTED PLASTER SOFFIT
13. GYPSUM BOARD
14. CEILING TILE SYSTEM
15. METAL STUD FRAMING
16. ROOF STRUCTURE PER STRUCTURAL
17. SKYLIGHT
18. PAINTED STEEL FENCE (ADD ALTERNATE #6)
19. PAINTED STEEL AND ACRYLIC PANEL FENCE (ADD ALTERNATE #6)
20. PAINTED STEEL AND ACRYLIC PANEL GATE (ADD ALTERNATE #6)
21. CMU PILASTER (ADD ALTERNATE #6)
22. CMU WALL (ADD ALTERNATE #6)
23. LIGHT FIXTURE PER ELECTRICAL (SISTEMALUX BLITZ-2 WINDOW W/ WIDE BEAM LENSES S.4061)
24. PAINTED METAL FLASHING CAP
25. ROOFING SYSTEM
26. RAISED FLOOR
27. PAINTED STEEL RAIL
28. SIGNAGE
29. BREAK METAL
30. METAL PANEL JOINT (3 / A8.1.2) DIMENSIONS ARE TO CENTER OF JOINT
31. SYSMIC JOINT
32. CONCRETE PANEL JOINT
33. TIE HOLE
34. PLASTER REVEAL (7 / A8.1.1)
35. BUTT GLAZING
36. SEISMIC EXPANSION JOINT
37. GUTTER
38. EXISTING CMU
39. PAINTED STEEL ANGLE PER STRUCTURAL
40. PAINTED STEEL AND ACRYLIC PANEL ROLLING GATES
41. PAINTED PLASTER SOFFIT
42. INFILL EXISTING PLANTERS W/ METAL FRAMING, PLYWOOD SUBSTRATE, WATERPROOF MEMBRANE, AND PAINTED PLASTER
43. PAINTED PLASTER SOFFIT
44. BUILDING ADDRESS IN 12" HIGH RAISED ALUMINUM LETTERS
45.
46.
47.
48.
49.
50.

GENERAL NOTES

'S' INDICATES SECURITY WINDOW FILM
'T' INDICATES TEMPEREED GLASS REQUIRED

CARRIER JOHNSON
ARCHITECTURE
INTERIOR DESIGN
PLANNING

GORDON R. CARRIER AIA
MICHAEL C. JOHNSON AIA

WILLIAM C. BOCKEN AIA
DEBORAH P. ELLIOTT IIDA

2600 MICHELSON DRIVE
SUITE 400
IRVINE, CALIFORNIA
92612

TEL 949 955-2353
FAX 949 955-2377

1301 THIRD AVENUE
SAN DIEGO, CALIFORNIA
92101

TEL 619 239-2353
FAX 619 239-6227

RECORD DOCUMENTS
THESE DOCUMENTS RELEASED BY CARRIER JOHNSON FOR USE AS RECORD DOCUMENTS REFLECT ALL KNOWN FIELD LOCATION OF THE WORK AND SIGNIFICANT CHANGES MADE DURING THE CONSTRUCTION PROCESS, AND ARE BASED ON INFORMATION FURNISHED BY CONTRACTOR, SUBCONTRACTORS AND OTHER PARTIES WHICH WILL BE ASSUMED RELIABLE. CARRIER JOHNSON CANNOT AND DOES NOT WARRANT THE ACCURACY OF SUCH INFORMATION AND SHALL NOT BE RESPONSIBLE FOR ANY ERRORS OR OMISSIONS WHICH MAY BE INCORPORATED THEREIN AS A RESULT. FINAL CONSTRUCTION CANNOT MUST INCLUDE FIELD CONFIRMATION OF EXISTING CONDITIONS.

ONTARIO PD: HEADQUARTERS

2534 S. ARCHIBALD AVE., ONTARIO, CALIFORNIA 91761

F13 Field Order #13 07.01.03
5 Addendum 5 04.21.2003
3 Addendum 3
2 Addendum 2/Bldg. Dept. Re-Submittal 03.20.2003
Building Dept. Submittal 02.24.2003

ISSUES:
DIRECTORY/FILE NUMBER: 4511-A614
XREF'S DRAWINGS:
PROJECT NUMBER: 4511.00
DRAWN BY: CHECKED BY:
DATE: 1/23/03
SCALE: AS NOTED
TITLE: BUILDING SECTIONS

DRAWING NO: A6.1.4

ALL IDEAS, DESIGN, ARRANGEMENTS AND PLANS INDICATED OR REPRESENTED BY THIS DRAWING ARE OWNED BY, AND THE PROPERTY OF CARRIER JOHNSON, AND WERE CREATED, EVOLVED AND DEVELOPED FOR USE ON AND IN CONNECTION WITH THIS PROJECT. NONE OF SUCH IDEAS, DESIGN, ARRANGEMENTS OR PLANS SHALL BE USED BY OR DISCLOSED TO ANY PERSON, FIRM OR CORPORATION FOR ANY PURPOSE WHATSOEVER WITHOUT THE WRITTEN PERMISSION OF CARRIER JOHNSON. FILING THESE DRAWINGS OR SPECIFICATIONS WITH ANY PUBLIC AGENCY IS NOT A PUBLICATION OF SAME. NO COPYING, REPRODUCTION OR USE THEREOF IS PERMISSIBLE WITHOUT THE CONSENT OF CARRIER JOHNSON.

ALL IDEAS, THIS DRAWING AND ARRANGEMENT OF SUCH IDEAS, DESIGN, ARRANGEMENTS, OR PLANS SHALL BE USED BY, OR DISCLOSED TO ANY PERSON, FIRM, OR CORPORATION FOR ANY PURPOSE WHATSOEVER WITHOUT THE WRITTEN PERMISSION OF CARRIER JOHNSON. NO COPYING, REPRODUCTION OR USE THEREOF IS PERMISSIBLE WITHOUT THE CONSENT OF CARRIER JOHNSON.

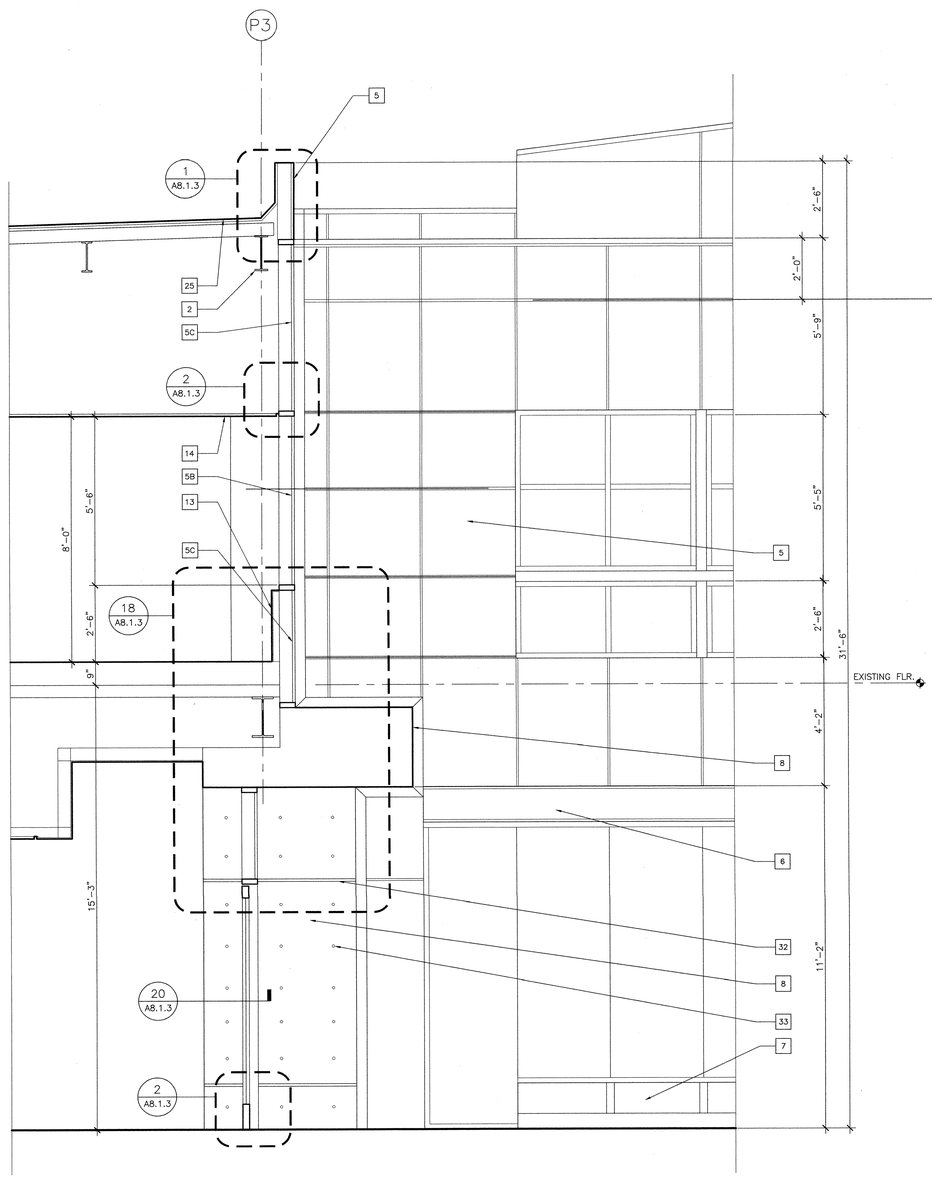

WALL SECTION 2
1/2"=1'-0"

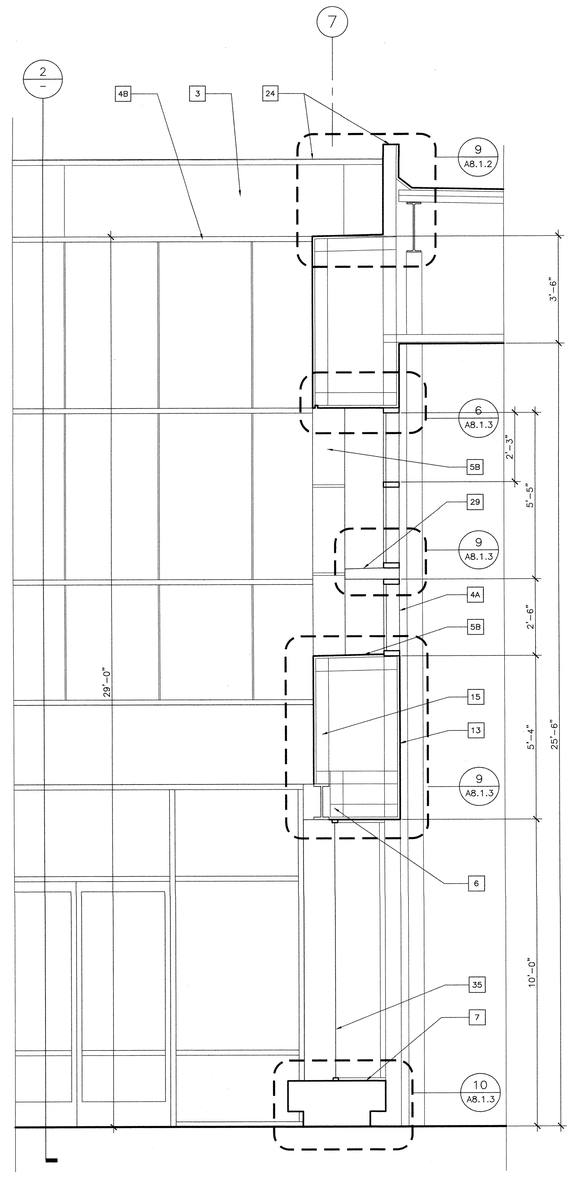

WALL SECTION 1
1/2"=1'-0"

PLAN KEY NOTES

1. FINISH GRADE PER CIVIL
2. STRUCTURE PER STRUCTURAL
3. METAL PANEL
4. A: WINDOW WALL SYSTEM B: CURTAIN WALL SYSTEM
5. GLAZING 5A 5B 5C
6. PAINTED STEEL
7. CONCRETE BENCH
8. CONCRETE PORTAL
9. WOOD BENCH
10. WOOD WAINSCOT
11. PAINTED PLASTER
12. PAINTED PLASTER SOFFIT
13. GYPSUM BOARD
14. CEILING TILE SYSTEM
15. METAL STUD FRAMING
16. ROOF STRUCTURE PER STRUCTURAL
17. SKYLIGHT
18. PAINTED STEEL FENCE (ADD ALTERNATE #6)
19. PAINTED STEEL AND ACRYLIC PANEL FENCE (ADD ALTERNATE #6)
20. PAINTED STEEL AND ACRYLIC PANEL GATE (ADD ALTERNATE #6)
21. CMU PILASTER (ADD ALTERNATE #6)
22. CMU WALL (ADD ALTERNATE #6)
23. LIGHT FIXTURE PER ELECTRICAL (SISTEMALUX BLITZ-2 WINDOW W/ WIDE BEAM LENSES S.4061)
24. PAINTED METAL FLASHING CAP
25. ROOFING SYSTEM
26. RAISED FLOOR
27. PAINTED STEEL RAIL
28. SIGNAGE
29. BREAK METAL
30. METAL PANEL JOINT (3 / A8.1.2) DIMENSIONS ARE TO CENTER OF JOINT
31. SYSMIC JOINT
32. CONCRETE PANEL JOINT
33. TIE HOLE
34. PLASTER REVEAL (7 / A8.1.1)
35. BUTT GLAZING
36. SEISMIC EXPANSION JOINT
37. GUTTER
38. EXISTING CMU
39. PAINTED STEEL ANGLE PER STRUCTURAL
40. PAINTED STEEL AND ACRYLIC PANEL ROLLING GATES
41. PAINTED PLASTER SOFFIT
42. INFILL EXISTING PLANTERS W/ METAL FRAMING, PLYWOOD SUBSTRATE, WATERPROOF MEMBRANE, AND PAINTED PLASTER
43. PAINTED PLASTER SOFFIT
44. BUILDING ADDRESS IN 12" HIGH RAISED ALUMINUM LETTERS
45.
46.
47.
48.
49.
50.

GENERAL NOTES

'S' INDICATES SECURITY WINDOW FILM

'T' INDICATES TEMPEREED GLASS REQUIRED

ARCHITECTURE
INTERIOR DESIGN
PLANNING

CARRIER JOHNSON

GORDON D. CARRIER AIA
MICHAEL C. JOHNSON AIA

WILLIAM C. BOCKEN AIA
DEBORAH P. ELLIOTT IIDA

2600 MICHELSON DRIVE
SUITE 400
IRVINE, CALIFORNIA
92612

TEL 949 955-2353
FAX 949 955-2377

1301 THIRD AVENUE
SAN DIEGO, CALIFORNIA
92101

TEL 619 239-2353
FAX 619 239-6227

RECORD DOCUMENTS
THESE DOCUMENTS RELEASED BY CARRIER JOHNSON FOR USE AS RECORD DOCUMENTS SHOW THE DESCRIBED LOCATION OF THE WORK AND SIGNIFICANT CHANGES MADE DURING THE CONSTRUCTION PROCESS, AND ARE BASED ON INFORMATION WHICH WAS PROVIDED BY THE CONTRACTOR AND OTHER PARTIES WHICH WILL BE ASSUMED RELIABLE. CARRIER JOHNSON CANNOT AND DOES NOT WARRANT THE ACCURACY AND COMPLETENESS OF SUCH INFORMATION AND SHALL NOT BE RESPONSIBLE FOR ANY ERRORS OR OMISSIONS WHICH MAY BE INCORPORATED THEREIN AS A RESULT. ALL RECORD DOCUMENTS SHALL ALSO INCLUDE FIELD CONFIRMATION OF EXISTING CONDITIONS.

ONTARIO PD:: HEADQUARTERS

2534 S. ARCHIBALD AVE., ONTARIO, CALIFORNIA 91761

3 Field Order #13 07.01.03
2 Addendum 5 04.21.2003
1 Addendum 3
Addendum 2/Bldg. Dept. Re-Submittal 03.20.2003
Building Dept. Submittal 02.24.2003

ISSUES:
DIRECTORY/FILE NUMBER: 4511-A615

XREFS DRAWINGS:

PROJECT NUMBER:
4511.00

DRAWN BY: CHECKED BY:

DATE:
1/23/03

SCALE:
AS NOTED

TITLE:
WALL SECTIONS & ENLARGED ELEVATIONS

DRAWING NO:
A6.1.5
2

ALL IDEAS, DESIGN, ARRANGEMENTS, OR PLANS SHALL BE USED BY, OR DISCLOSED TO ANY PERSON, FIRM, OR CORPORATION FOR ANY PURPOSE WHATSOEVER WITHOUT THE WRITTEN PERMISSION OF CARRIER JOHNSON. FILING THESE DRAWINGS OR SPECIFICATIONS WITH ANY PUBLIC AGENCY IS NOT A PUBLICATION OF SAME. NO COPYING, REPRODUCTION OR USE THEREOF IS PERMISSIBLE WITHOUT THE CONSENT OF CARRIER JOHNSON.

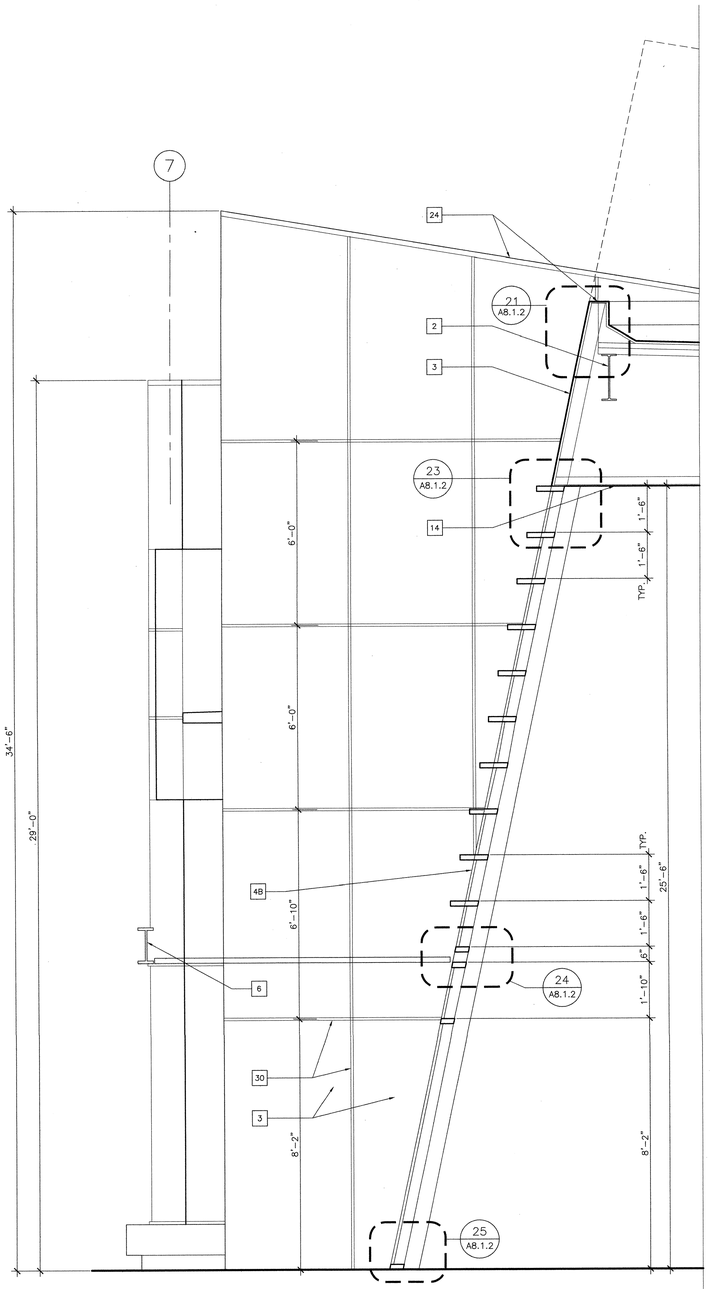

WALL SECTION
1/2"=1'-0" 3

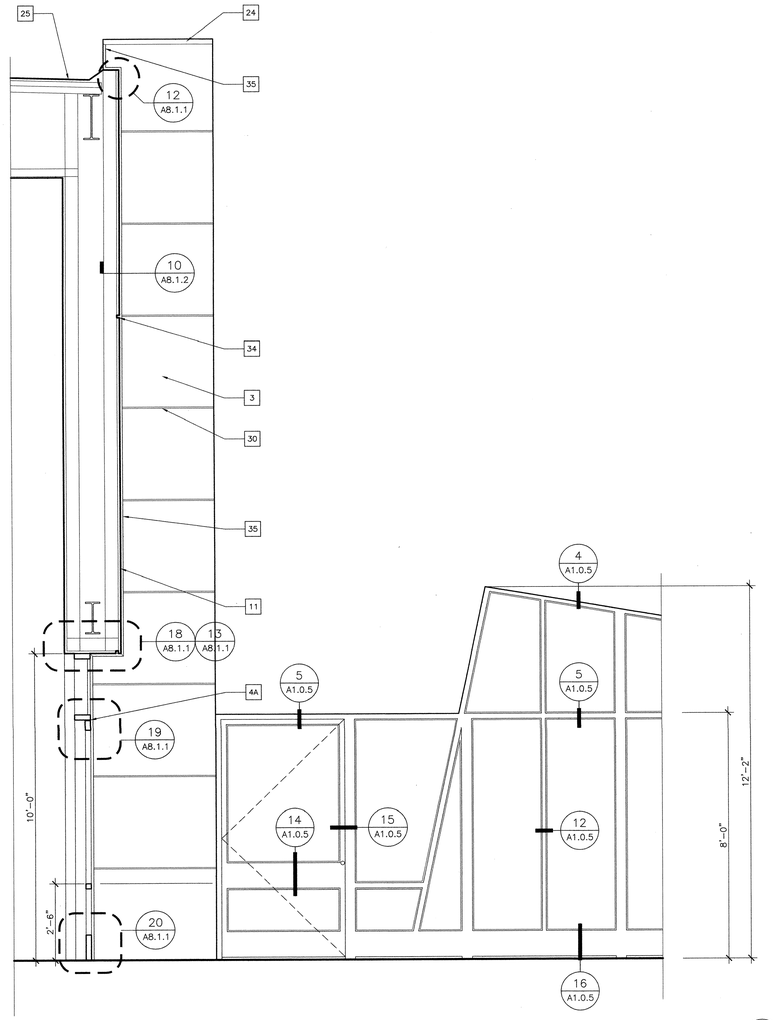

WALL SECTION
1/2"=1'-0" 1

PLAN KEY NOTES

1. FINISH GRADE PER CIVIL
2. STRUCTURE PER STRUCTURAL
3. METAL PANEL
4. A: WINDOW WALL SYSTEM B: CURTAIN WALL SYSTEM
5. GLAZING 5A 5B 5C
6. PAINTED STEEL
7. CONCRETE BENCH
8. CONCRETE PORTAL
9. WOOD BENCH
10. WOOD WAINSCOT
11. PAINTED PLASTER
12. PAINTED PLASTER SOFFIT
13. GYPSUM BOARD
14. CEILING TILE SYSTEM
15. METAL STUD FRAMING
16. ROOF STRUCTURE PER STRUCTURAL
17. SKYLIGHT
18. PAINTED STEEL FENCE (ADD ALTERNATE #6)
19. PAINTED STEEL AND ACRYLIC PANEL FENCE (ADD ALTERNATE #6)
20. PAINTED STEEL AND ACRYLIC PANEL GATE (ADD ALTERNATE #6)
21. CMU PILASTER (ADD ALTERNATE #6)
22. CMU WALL (ADD ALTERNATE #6)
23. LIGHT FIXTURE PER ELECTRICAL (SISTEMALUX BLITZ-2 WINDOW W/ WIDE BEAM LENSES S.4061)
24. PAINTED METAL FLASHING CAP
25. ROOFING SYSTEM
26. RAISED FLOOR
27. PAINTED STEEL RAIL
28. SIGNAGE
29. BREAK METAL
30. METAL PANEL JOINT (3 / A8.1.2) DIMENSIONS ARE TO CENTER OF JOINT
31. SYSMIC JOINT
32. CONCRETE PANEL JOINT
33. TIE HOLE
34. PLASTER REVEAL (7 / A8.1.1)
35. BUTT GLAZING
36. SEISMIC EXPANSION JOINT
37. GUTTER
38. EXISTING CMU
39. PAINTED STEEL ANGLE PER STRUCTURAL
40. PAINTED STEEL AND ACRYLIC PANEL ROLLING GATES
41. PAINTED PLASTER SOFFIT
42. INFILL EXISTING PLANTERS W/ METAL FRAMING, PLYWOOD SUBSTRATE, WATERPROOF MEMBRANE, AND PAINTED PLASTER
43. PAINTED PLASTER SOFFIT
44. BUILDING ADDRESS IN 12" HIGH RAISED ALUMINUM LETTERS
45.
46.
47.
48.
49.
50.

GENERAL NOTES

'S' INDICATES SECURITY WINDOW FILM
'T' INDICATES TEMPEREED GLASS REQUIRED

CARRIER JOHNSON
ARCHITECTURE
INTERIOR DESIGN
PLANNING

GORDON R. CARRIER AIA
MICHAEL C. JOHNSON AIA

WILLIAM C. BOCKEN AIA
DEBORAH P. ELLIOTT IIDA

2600 MICHELSON DRIVE
SUITE 400
IRVINE, CALIFORNIA
92612

TEL 949 955-2353
FAX 949 955-2377

1301 THIRD AVENUE
SAN DIEGO, CALIFORNIA
92101

TEL 619 239-2353
FAX 619 239-6227

RECORD DOCUMENTS
RECORD DOCUMENTS ARE PREPARED BY CARRIER JOHNSON FOR USE AS RECORD DOCUMENTS WILL SHOW THE REPORTED LOCATION OF THE WORK AND SIGNIFICANT CHANGES MADE DURING THE CONSTRUCTION PROCESS, AND ARE BASED ON LIMITED INFORMATION PROVIDED BY THE CONTRACTOR AND OTHER PARTIES WHICH WILL BE ASSUMED RELIABLE. CARRIER JOHNSON CANNOT AND DOES NOT WARRANT THE COMPLETENESS AND ACCURACY OF THESE DOCUMENTS AND SHALL NOT BE RESPONSIBLE FOR ANY ERRORS OR OMISSIONS WHICH MAY BE INCORPORATED THEREIN AS A RESULT. FUTURE CONSTRUCTION PLANNING MUST INCLUDE FIELD CONFIRMATION OF EXISTING CONDITIONS.

ONTARIO PD:: HEADQUARTERS

2534 S. ARCHIBALD AVE., ONTARIO, CALIFORNIA 91761

Field Order #13 07.01.03
5 Addendum 5 04.21.2003
3 Addendum 3
2 Addendum 2/Bldg. Dept. Re-Submittal 03.20.2003
Building Dept. Submittal 02.24.2003

ISSUES:
DIRECTORY/FILE NUMBER: 4511-A616
XREF'S DRAWINGS:
PROJECT NUMBER: 4511.00
DRAWN BY: CHECKED BY:
DATE: 1/23/03
SCALE: AS NOTED
TITLE: WALL SECTIONS & ENLARGED ELEVATIONS

DRAWING NO:
A6.1.6
2

ALL IDEAS, DESIGNS, ARRANGEMENTS AND PLANS INDICATED OR REPRESENTED BY THIS DRAWING ARE AND SHALL REMAIN THE PROPERTY OF CARRIER JOHNSON. THEY WERE CREATED, EVOLVED AND DEVELOPED FOR USE ON AND IN CONNECTION WITH THE SPECIFIED PROJECT. NONE OF SUCH IDEAS, DESIGNS, ARRANGEMENTS OR PLANS SHALL BE USED BY, OR DISCLOSED TO ANY PERSON, FIRM, OR CORPORATION FOR ANY PURPOSE WHATSOEVER WITHOUT THE WRITTEN PERMISSION OF CARRIER JOHNSON. NO COPYING, REPRODUCTION OR USE THEREOF IS PERMISSIBLE WITHOUT THE CONSENT OF CARRIER JOHNSON.

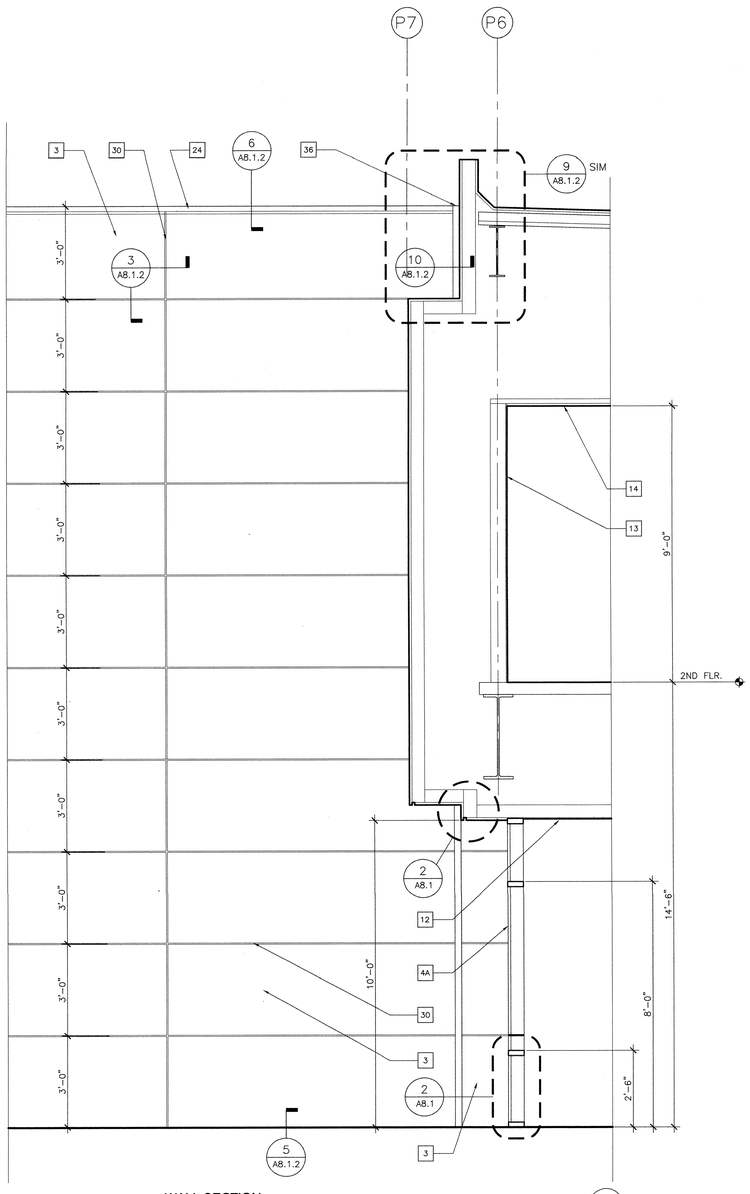

WALL SECTION
1/2"=1'-0"

2

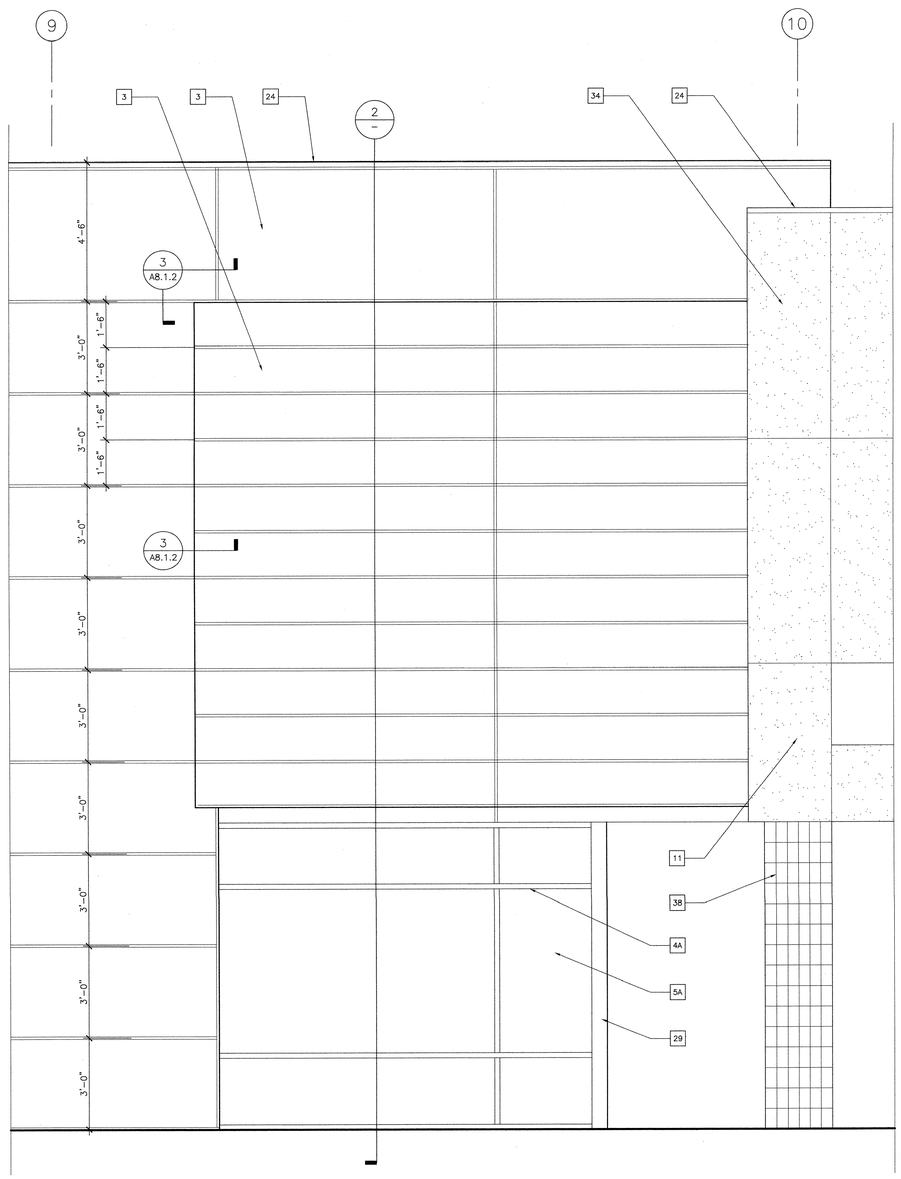

ENLARGED ELEVATION
1/2"=1'-0"

1

PLAN KEY NOTES

1. FINISH GRADE PER CIVIL
2. STRUCTURE PER STRUCTURAL
3. METAL PANEL
4. A: WINDOW WALL SYSTEM B: CURTAIN WALL SYSTEM
5. GLAZING 5A 5B 5C
6. PAINTED STEEL
7. CONCRETE BENCH
8. CONCRETE PORTAL
9. WOOD BENCH
10. WOOD WAINSCOT
11. PAINTED PLASTER
12. PAINTED PLASTER SOFFIT
13. GYPSUM BOARD
14. CEILING TILE SYSTEM
15. METAL STUD FRAMING
16. ROOF STRUCTURE PER STRUCTURAL
17. SKYLIGHT
18. PAINTED STEEL FENCE (ADD ALTERNATE #6)
19. PAINTED STEEL AND ACRYLIC PANEL FENCE (ADD ALTERNATE #6)
20. PAINTED STEEL AND ACRYLIC PANEL GATE (ADD ALTERNATE #6)
21. CMU PILASTER (ADD ALTERNATE #6)
22. CMU WALL (ADD ALTERNATE #6)
23. LIGHT FIXTURE PER ELECTRICAL (SISTEMALUX BLITZ-2 WINDOW W/ WIDE BEAM LENSES S.4061)
24. PAINTED METAL FLASHING CAP
25. ROOFING SYSTEM
26. RAISED FLOOR
27. PAINTED STEEL RAIL
28. SIGNAGE
29. BREAK METAL
30. METAL PANEL JOINT (3 / A8.1.2) DIMENSIONS ARE TO CENTER OF JOINT
31. SYSMIC JOINT
32. CONCRETE PANEL JOINT
33. TIE HOLE
34. PLASTER REVEAL (7 / A8.1.1)
35. BUTT GLAZING
36. SEISMIC EXPANSION JOINT
37. GUTTER
38. EXISTING CMU
39. PAINTED STEEL ANGLE PER STRUCTURAL
40. PAINTED STEEL AND ACRYLIC PANEL ROLLING GATES
41. PAINTED PLASTER SOFFIT
42. INFILL EXISTING PLANTERS W/ METAL FRAMING, PLYWOOD SUBSTRATE, WATERPROOF MEMBRANE, AND PAINTED PLASTER
43. PAINTED PLASTER SOFFIT
44. BUILDING ADDRESS IN 12" HIGH RAISED ALUMINUM LETTERS
45.
46.
47.
48.
49.
50.

GENERAL NOTES

'S' INDICATES SECURITY WINDOW FILM

'T' INDICATES TEMPEREED GLASS REQUIRED

ARCHITECTURE
INTERIOR DESIGN
PLANNING

CARRIER JOHNSON

GORDON R. CARRIER AIA
MICHAEL C. JOHNSON AIA

WILLIAM C. BOCKEN AIA
DEBORAH P. ELLIOTT IIDA

2600 MICHELSON DRIVE
SUITE 400
IRVINE, CALIFORNIA
92612

TEL 949 955-2353
FAX 949 955-2377

1301 THIRD AVENUE
SAN DIEGO, CALIFORNIA
92101

TEL 619 239-2353
FAX 619 239-6227

RECORD DOCUMENTS
THESE RECORD DOCUMENTS ARE PREPARED BY CARRIER JOHNSON FOR USE AS RECORD DOCUMENTS ONLY. THEY SHOW THE PERSON FIELD LOCATION OF THE WORK AND SIGNIFICANT CHANGES MADE DURING THE CONSTRUCTION PROCESS, AND ARE BASED ON MARKED-UP PRINTS, DRAWINGS AND OTHER DATA FURNISHED BY CONTRACTOR AND OTHER PARTIES WHICH WERE ASSUMED RELIABLE. CARRIER JOHNSON CANNOT AND DOES NOT WARRANT THE ACCURACY AND COMPLETENESS OF THE INFORMATION AND SHALL NOT BE RESPONSIBLE FOR ANY ERRORS OR OMISSIONS WHICH MAY BE INCORPORATED THEREIN AS A RESULT OF RELIANCE ON SUCH INFORMATION. AS-BUILT INCLUDE FIELD CONFIRMATION OF EXISTING CONDITIONS.

ONTARIO PD:: HEADQUARTERS

2534 S. ARCHIBALD AVE., ONTARIO, CALIFORNIA 91761

Field Order #13 07.01.03
5 Addendum 5 04.21.2003
3 Addendum 3
2 Addendum 2/Bldg. Dept. Re-Submittal 03.20.2003
Building Dept. Submittal 02.24.2003

ISSUES:
DIRECTORY/FILE NUMBER: 4511-A617
XREF'S DRAWINGS:
PROJECT NUMBER: 4511.00
DRAWN BY: CHECKED BY:
DATE: 1/23/03
SCALE: AS NOTED
TITLE: WALL SECTIONS & ENLARGED ELEVATIONS

DRAWING NO: A6.1.7 2

ALL IDEAS, DESIGN, ARRANGEMENTS AND PLANS INDICATED OR REPRESENTED BY THESE DRAWINGS AND SPECIFICATIONS, OR PLANS SHALL BE USED BY, OR DISCLOSED TO ANY PERSON, FIRM, OR CORPORATION FOR ANY PURPOSE WHATSOEVER WITHOUT THE WRITTEN PERMISSION OF CARRIER JOHNSON. FILING THESE DRAWINGS OR SPECIFICATIONS WITH ANY PUBLIC AGENCY IS NOT A PUBLICATION OF SAME. NO COPYING, REPRODUCTION OR USE THEREOF IS PERMISSIBLE WITHOUT THE CONSENT OF CARRIER JOHNSON.

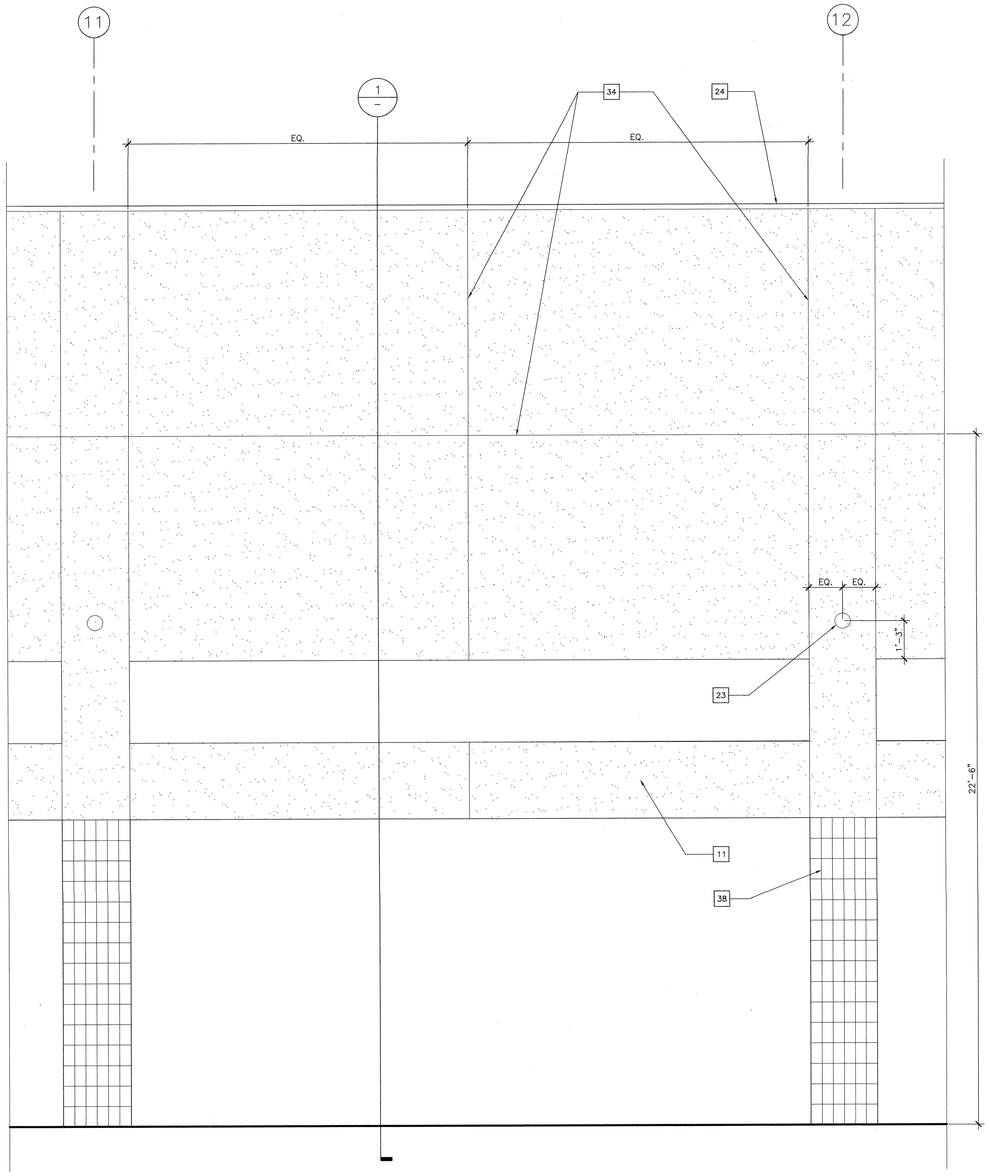

ENLARGED ELEVATION
1/2"=1'-0"
2

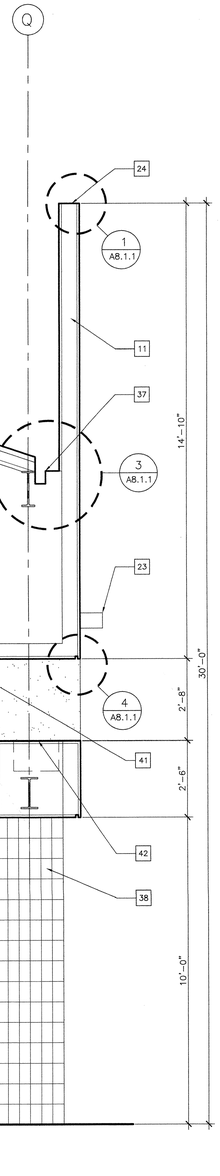

WALL SECTION
1/2"=1'-0"
1

PLAN KEY NOTES

1. FINISH GRADE PER CIVIL
2. STRUCTURE PER STRUCTURAL
3. METAL PANEL
4. A: WINDOW WALL SYSTEM B: CURTAIN WALL SYSTEM
5. GLAZING 5A 5B 5C
6. PAINTED STEEL
7. CONCRETE BENCH
8. CONCRETE PORTAL
9. WOOD BENCH
10. WOOD WAINSCOT
11. PAINTED PLASTER
12. PAINTED PLASTER SOFFIT
13. GYPSUM BOARD
14. CEILING TILE SYSTEM
15. METAL STUD FRAMING
16. ROOF STRUCTURE PER STRUCTURAL
17. SKYLIGHT
18. PAINTED STEEL FENCE (ADD ALTERNATE #6)
19. PAINTED STEEL AND ACRYLIC PANEL FENCE (ADD ALTERNATE #6)
20. PAINTED STEEL AND ACRYLIC PANEL GATE (ADD ALTERNATE #6)
21. CMU PILASTER (ADD ALTERNATE #6)
22. CMU WALL (ADD ALTERNATE #6)
23. LIGHT FIXTURE PER ELECTRICAL (SISTEMALUX BLITZ-2 WINDOW W/ WIDE BEAM LENSES S.4061)
24. PAINTED METAL FLASHING CAP
25. ROOFING SYSTEM
26. RAISED FLOOR
27. PAINTED STEEL RAIL
28. SIGNAGE
29. BREAK METAL
30. METAL PANEL JOINT (3 / A8.1.2) DIMENSIONS ARE TO CENTER OF JOINT
31. SYSMIC JOINT
32. CONCRETE PANEL JOINT
33. TIE HOLE
34. PLASTER REVEAL (7 / A8.1.1)
35. BUTT GLAZING
36. SEISMIC EXPANSION JOINT
37. GUTTER
38. EXISTING CMU
39. PAINTED STEEL ANGLE PER STRUCTURAL
40. PAINTED STEEL AND ACRYLIC PANEL ROLLING GATES
41. PAINTED PLASTER SOFFIT
42. INFILL EXISTING PLANTERS W/ METAL FRAMING, PLYWOOD SUBSTRATE, WATERPROOF MEMBRANE, AND PAINTED PLASTER
43. PAINTED PLASTER SOFFIT
44. BUILDING ADDRESS IN 12" HIGH RAISED ALUMINUM LETTERS
45.
46.
47.
48.
49.
50.

GENERAL NOTES

'S' INDICATES SECURITY WINDOW FILM
'T' INDICATES TEMPEREED GLASS REQUIRED

ARCHITECTURE
INTERIOR DESIGN
PLANNING

CARRIER JOHNSON

GORDON R. CARRIER AIA
MICHAEL C. JOHNSON AIA

WILLIAM C. BOCKEN AIA
DEBORAH P. ELLIOTT IIDA

2600 MICHELSON DRIVE
SUITE 400
IRVINE, CALIFORNIA
92612

TEL 949 955-2353
FAX 949 955-2377

1301 THIRD AVENUE
SAN DIEGO, CALIFORNIA
92101

TEL 619 239-2353
FAX 619 239-6227

RECORD DOCUMENTS
THESE DOCUMENTS RELEASED BY CARRIER JOHNSON FOR USE AS RECORD DOCUMENTS SHALL REFLECT ADDITIONS, DELETIONS, AND MODIFICATIONS TO THE WORK AND SHALL INCORPORATE CHANGES MADE DURING THE CONSTRUCTION PROCESS, AND ARE BASED ON UNVERIFIED INFORMATION PROVIDED BY THE CONTRACTOR AND OTHER PARTIES WHICH SHALL BE NOTED AS SUCH. WHILE CARRIER JOHNSON CANNOT AND DOES NOT WARRANT THE ACCURACY AND/OR COMPLETENESS OF THIS INFORMATION AS SHALL BE REFLECTED IN RECORD DOCUMENTS, ANY ERRORS OR OMISSIONS WHICH MAY BE INCORPORATED THEREIN AS A RESULT, FUTURE CONSTRUCTION PLANNING MUST INCLUDE FIELD CONFIRMATION OF EXISTING CONDITIONS.

ONTARIO PD:: HEADQUARTERS

2534 S. ARCHIBALD AVE., ONTARIO, CALIFORNIA 91761

FO 13 Field Order #13 07.01.03
5 Addendum 5 04.21.2003
3 Addendum 3
2 Addendum 2/Bldg. Dept. Re-Submittal 03.20.2003
Building Dept. Submittal 02.24.2003

ISSUES:
DIRECTORY/FILE NUMBER: 4511 – A618
XREF'S DRAWINGS:
PROJECT NUMBER: 4511.00
DRAWN BY: CHECKED BY:
DATE: 1/23/03
SCALE: AS NOTED
TITLE: WALL SECTIONS & ENLARGED ELEVATIONS

DRAWING NO: A6.1.8 2

ALL IDEAS, DESIGN, ARRANGEMENTS, AND PLANS INDICATED OR REPRESENTED BY THIS DRAWING ARE OWNED BY AND THE PROPERTY OF CARRIER JOHNSON AND WERE CREATED, EVOLVED AND DEVELOPED FOR USE ON AND IN CONNECTION WITH THIS PROJECT. NONE OF SUCH IDEAS, DESIGN, ARRANGEMENTS, OR PLANS SHALL BE USED BY, OR DISCLOSED TO ANY PERSON, FIRM, OR CORPORATION FOR ANY PURPOSE WHATSOEVER WITHOUT THE WRITTEN PERMISSION OF CARRIER JOHNSON. FILING THESE DRAWINGS OR SPECIFICATIONS WITH ANY PUBLIC AGENCY IS NOT A PUBLICATION OF SAME. NO COPYING, REPRODUCTION OR USE THEREOF IS PERMISSIBLE WITHOUT THE CONSENT OF CARRIER JOHNSON.

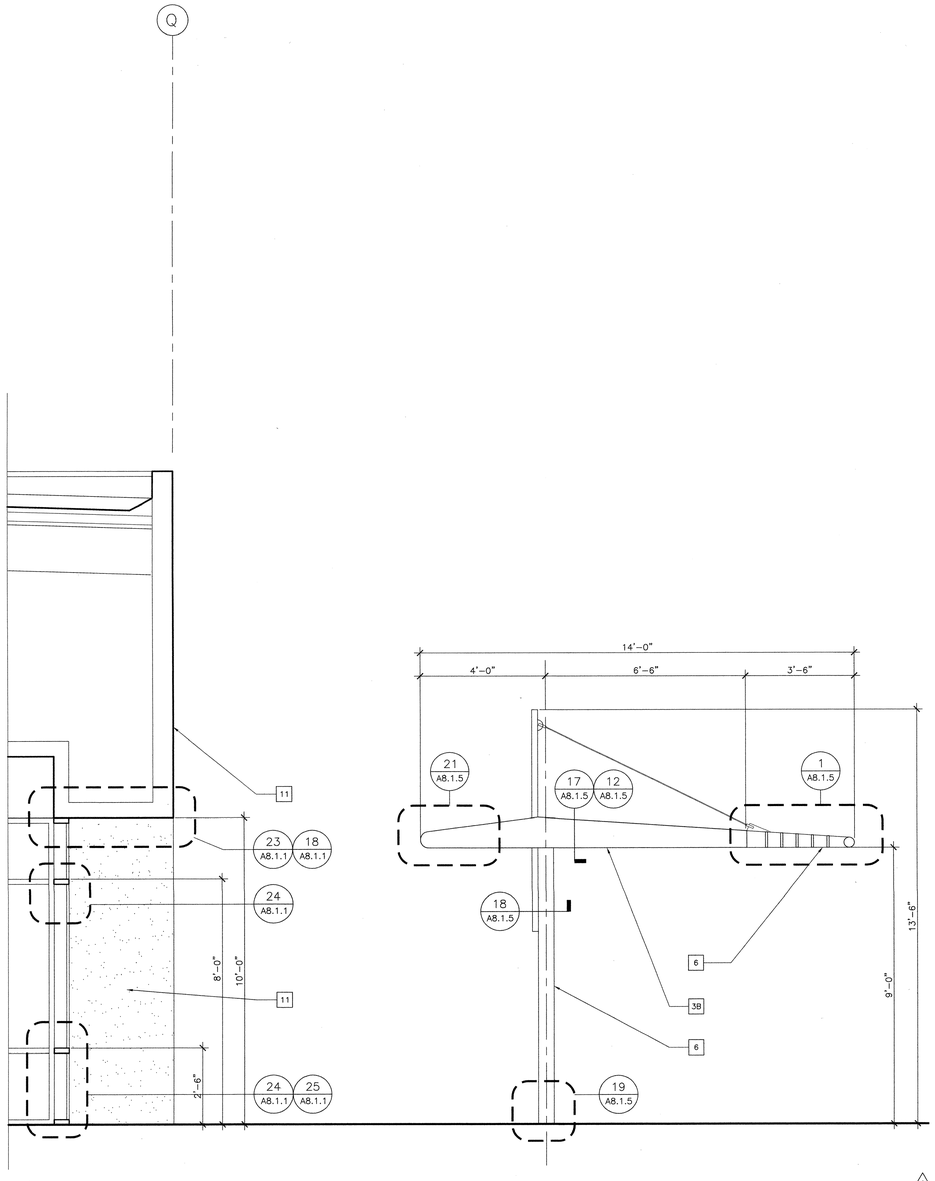

WALL SECTION 3 (2)
1/2"=1'-0"

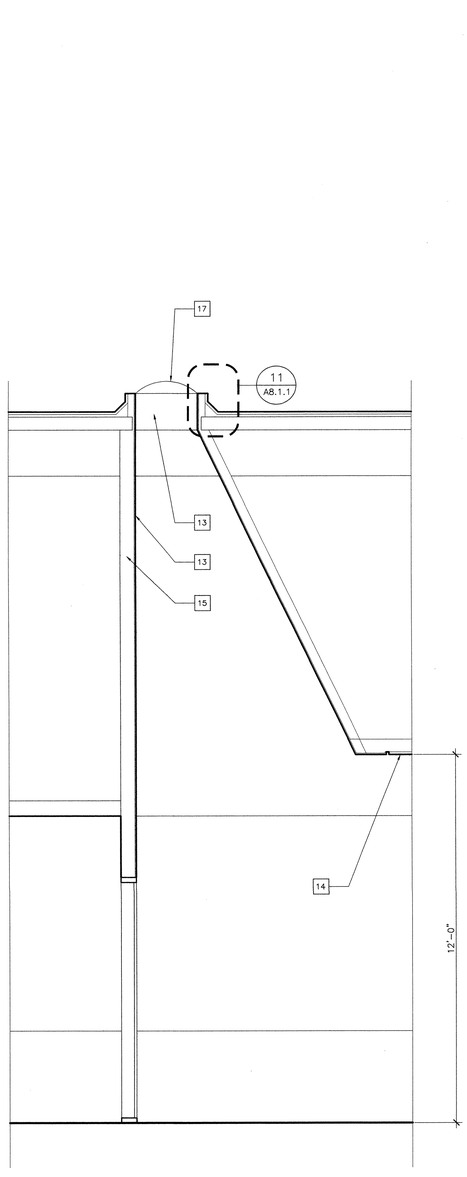

WALL SECTION 2
1/2"=1'-0"

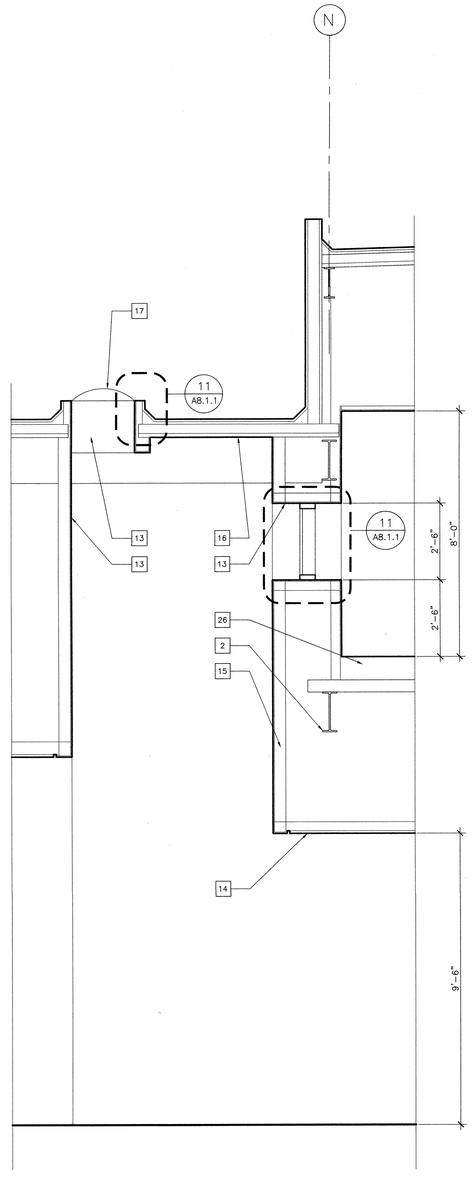

WALL SECTION 1
1/2"=1'-0"

PLAN KEY NOTES

1. FINISH GRADE PER CIVIL
2. STRUCTURE PER STRUCTURAL
3. METAL PANEL
4. A: WINDOW WALL SYSTEM B: CURTAIN WALL SYSTEM
5. GLAZING 5A 5B 5C
6. PAINTED STEEL
7. CONCRETE BENCH
8. CONCRETE PORTAL
9. WOOD BENCH
10. WOOD WAINSCOT
11. PAINTED PLASTER
12. PAINTED PLASTER SOFFIT
13. GYPSUM BOARD
14. CEILING TILE SYSTEM
15. METAL STUD FRAMING
16. ROOF STRUCTURE PER STRUCTURAL
17. SKYLIGHT
18. PAINTED STEEL FENCE (ADD ALTERNATE #6)
19. PAINTED STEEL AND ACRYLIC PANEL FENCE (ADD ALTERNATE #6)
20. PAINTED STEEL AND ACRYLIC PANEL GATE (ADD ALTERNATE #6)
21. CMU PILASTER (ADD ALTERNATE #6)
22. CMU WALL (ADD ALTERNATE #6)
23. LIGHT FIXTURE PER ELECTRICAL (SISTEMALUX BLITZ-2 WINDOW W/ WIDE BEAM LENSES S.4061)
24. PAINTED METAL FLASHING CAP
25. ROOFING SYSTEM
26. RAISED FLOOR
27. PAINTED STEEL RAIL
28. SIGNAGE
29. BREAK METAL
30. METAL PANEL JOINT (3 / A8.1.2) DIMENSIONS ARE TO CENTER OF JOINT
31. SYSMIC JOINT
32. CONCRETE PANEL JOINT
33. TIE HOLE
34. PLASTER REVEAL (7 / A8.1.1)
35. BUTT GLAZING
36. SEISMIC EXPANSION JOINT
37. GUTTER
38. EXISTING CMU
39. PAINTED STEEL ANGLE PER STRUCTURAL
40. PAINTED STEEL AND ACRYLIC PANEL ROLLING GATES
41. PAINTED PLASTER SOFFIT
42. INFILL EXISTING PLANTERS W/ METAL FRAMING, PLYWOOD SUBSTRATE, WATERPROOF MEMBRANE, AND PAINTED PLASTER
43. PAINTED PLASTER SOFFIT
44. BUILDING ADDRESS IN 12" HIGH RAISED ALUMINUM LETTERS
45.
46.
47.
48.
49.
50.

GENERAL NOTES

'S' INDICATES SECURITY WINDOW FILM
'T' INDICATES TEMPEREED GLASS REQUIRED

CARRIER JOHNSON
ARCHITECTURE
INTERIOR DESIGN
PLANNING
GORDON R. CARRIER AIA
MICHAEL C. JOHNSON AIA
WILLIAM C. BOCKEN AIA
DEBORAH F. ELLIOTT IIDA
2600 MICHELSON DRIVE
SUITE 400
IRVINE, CALIFORNIA
92612
TEL 949 955-2353
FAX 949 955-2377
1301 THIRD AVENUE
SAN DIEGO, CALIFORNIA
92101
TEL 619 239-2353
FAX 619 239-6227

RECORD DOCUMENTS
THESE DOCUMENTS RELEASED BY CARRIER JOHNSON FOR USE AS RECORD DOCUMENTS WILL SHOW REVISIONS NOTED DURING THE CONSTRUCTION PROCESS, AND ARE BASED ON LOCATION OF THE WORK, AND SIGNIFICANT CHANGES MADE UNLIMITED, WHETHER INTENTIONAL OR NOT, AND CONTRACTOR AND OTHER PARTIES WHICH WILL BE ASSUMED RELIABLE. CARRIER JOHNSON CANNOT AND DOES NOT WARRANT THE CONSTRUCTION WORK DOCUMENTS AS TO THEIR ACCURACY AND SHALL NOT BE RESPONSIBLE FOR ANY ERRORS OR OMISSIONS WHICH MAY BE INCORPORATED THEREIN AS A RESULT OF SUCH CONDITIONS. CONTRACTOR AND SUBS MUST FIELD CONFIRMATION OF EXISTING CONDITIONS.

ONTARIO PD:: HEADQUARTERS

2534 S. ARCHIBALD AVE., ONTARIO, CALIFORNIA 91761

Field Order #13 07.01.03
5 Addendum 5 04.21.2003
3 Addendum 3
2 Addendum 2/Bldg. Dept. Re-Submittal 03.20.2003
Building Dept. Submittal 02.24.2003

ISSUES:
DIRECTORY/FILE NUMBER: 4511-A619
XREF'S DRAWINGS:
PROJECT NUMBER: 4511.00
DRAWN BY: CHECKED BY:
DATE: 1/23/03
SCALE: AS NOTED

TITLE: WALL SECTIONS & ENLARGED ELEVATIONS

DRAWING NO: A6.1.9

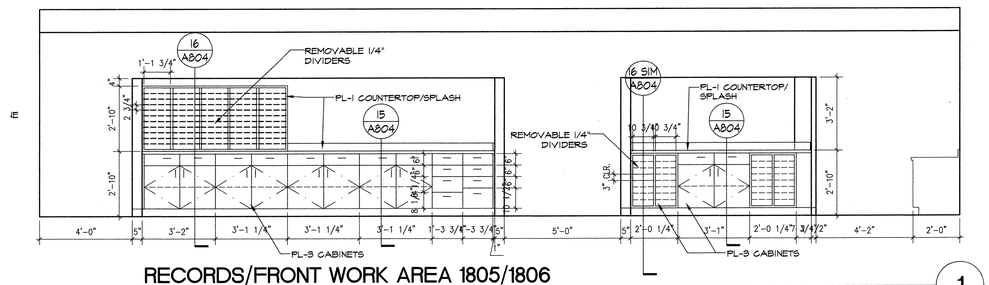

RECORDS/FRONT WORK AREA 1805/1806

SCALE: 3/8" = 1'-0"

1

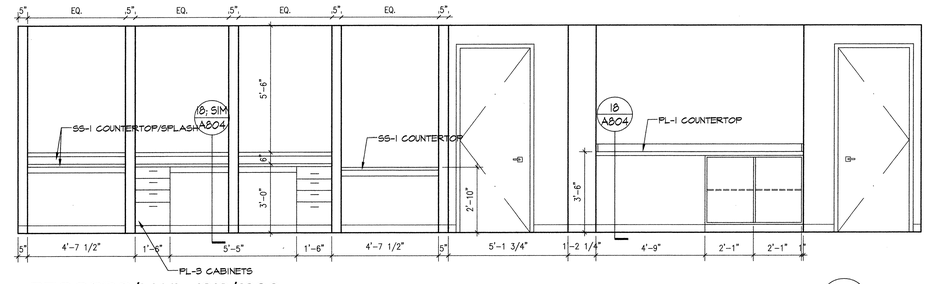

RECORDS/MAIL 1818/1806

SCALE: 3/8" = 1'-0"

2

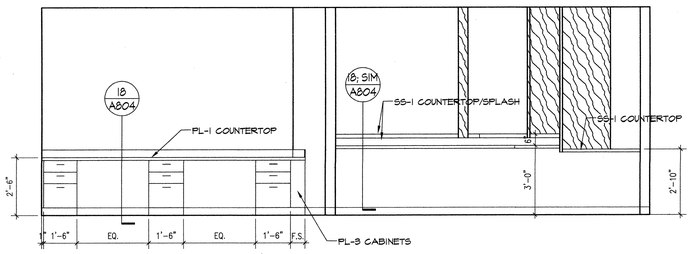

FORMS 1804

SCALE: 3/8" = 1'-0"

3

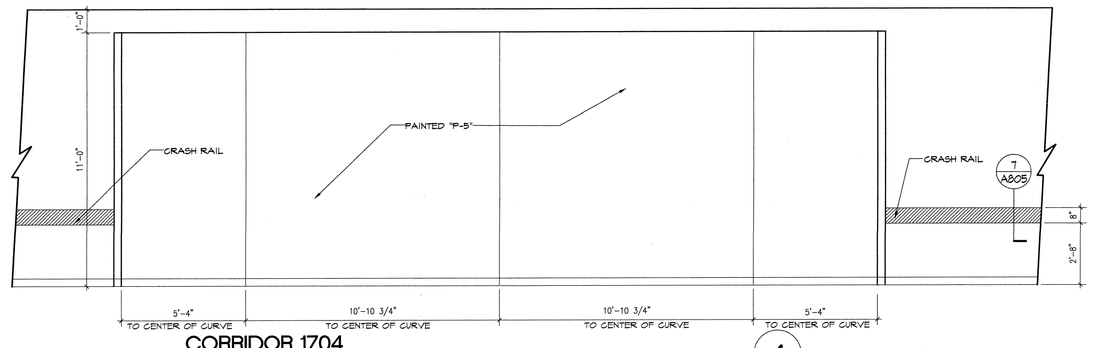

CORRIDOR 1704

SCALE: 3/8" = 1'-0"

4

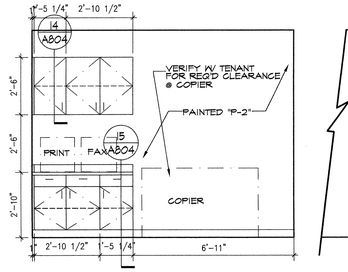

COPY/PRINT 4205

SCALE: 3/8" = 1'-0"

5

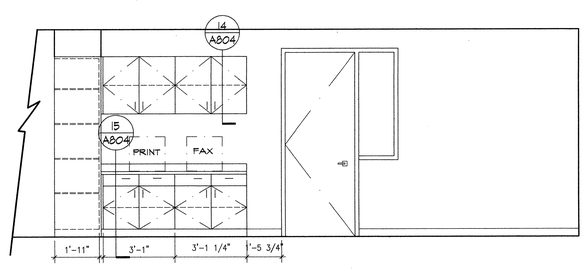

COPY/PRINT 1819

SCALE: 3/8" = 1'-0"

6

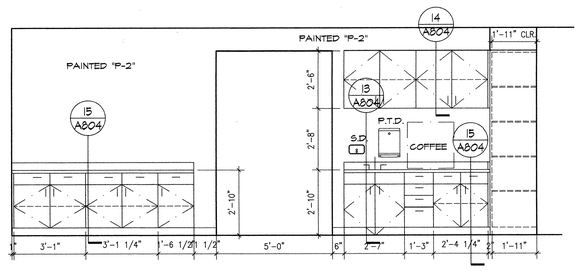

COPY/PRINT 1819

SCALE: 3/8" = 1'-0"

7

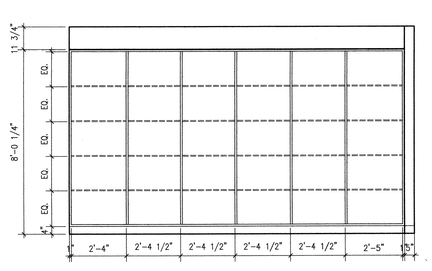

MAIL/COUNTER 1818

SCALE: 3/8" = 1'-0"

8

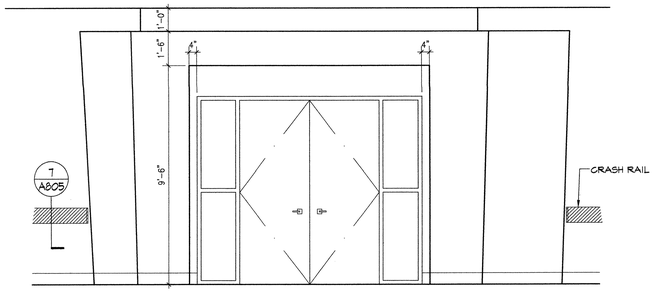

CHIEF WAITING/CORRIDOR 2301/2302

SCALE: 3/8" = 1'-0"

9

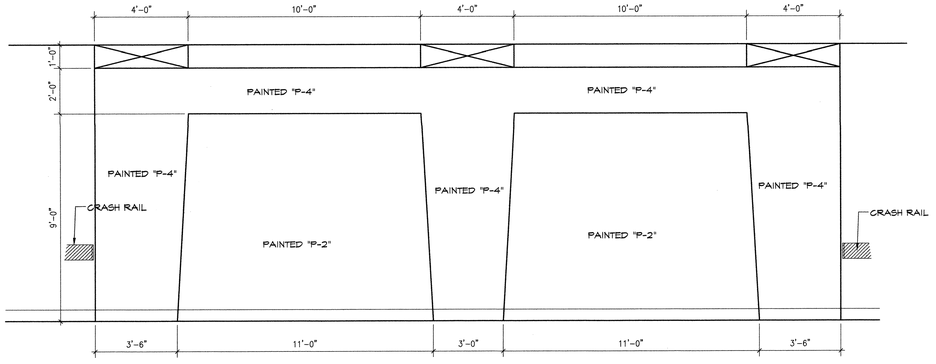

CORRIDOR 1701

SCALE: 3/8" = 1'-0"

10

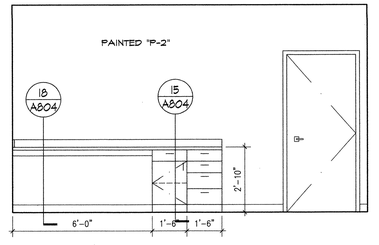

FINGERPRINT 1817

SCALE: 3/8" = 1'-0"

11

ALL IDEAS, DESIGN, ARRANGEMENTS AND PLANS INDICATED OR REPRESENTED BY THIS DRAWING ARE OWNED BY, AND THE PROPERTY OF CARRIER JOHNSON AND WERE CREATED, EVOLVED AND DEVELOPED FOR USE ON, AND IN CONNECTION WITH THIS PROJECT. NONE OF SUCH IDEAS, DESIGN, ARRANGEMENTS OR PLANS SHALL BE USED BY, OR DISCLOSED TO, ANY PERSON, FIRM OR CORPORATION FOR ANY PURPOSE WHATSOEVER WITHOUT THE WRITTEN PERMISSION OF CARRIER JOHNSON. NO COPYING, REPRODUCTION OR USE THEREOF IS PERMISSIBLE WITHOUT THE CONSENT OF CARRIER JOHNSON. THESE DRAWINGS OR SPECIFICATIONS WITH ANY PUBLIC AGENCY IS NOT A PUBLICATION OF SAME.

CARRIER JOHNSON

ARCHITECTURE
INTERIOR DESIGN
PLANNING

GORDON R. CARRIER AIA
MICHAEL C. JOHNSON AIA

WILLIAM C. BOCKEN AIA
DEBORAH P. ELLIOTT IIDA

2600 MICHELSON DRIVE
SUITE 400
IRVINE, CALIFORNIA
92612

TEL 949 955-2353
FAX 949 955-2377

1301 THIRD AVENUE
SAN DIEGO, CALIFORNIA
92101

TEL 619 239-2353
FAX 619 239-6227

RECORD DOCUMENTS

THESE DOCUMENTS RELEASED BY CARRIER JOHNSON FOR USE AS RECORD DOCUMENTS WILL SHOW THE REPORTED LOCATION OF THE WORK AND/OR CHANGES THAT WERE MADE DURING THE CONSTRUCTION PROCESS, AND ARE BASED ON MARKED-UP PRINTS, DRAWINGS AND OTHER DATA FURNISHED BY UNDERSIGNED. INFORMATION PROVIDED BY THE CONTRACTOR AND SUBCONTRACTORS SHALL BE RELIED UPON TO A LIMITED EXTENT BY CARRIER JOHNSON CANNOT AND DOES NOT WARRANT THE ACCURACY AND/OR COMPLETENESS OF THIS INFORMATION AND SHALL NOT BE RESPONSIBLE FOR ANY INACCURACIES OR OMISSIONS WHICH MAY BE INCORPORATED THEREIN AS A RESULT. FUTURE CONSTRUCTION PLANNING MUST INCLUDE FIELD CONFIRMATION OF EXISTING CONDITIONS.

ONTARIO PD:: HEADQUARTERS

2534 S. ARCHIBALD AVE., ONTARIO, CALIFORNIA 91761

FO13 Field Order #13 07.01.03
5 Addendum 5 04.21.2003
3 Addendum 3
2 Addendum 2/Bldg. Dept. Re-Submittal 03.20.2003
Building Dept. Submittal 02.24.2003

ISSUES:
DIRECTORY/FILE NUMBER: 4511 – A71
XREF'S DRAWINGS:
PROJECT NUMBER: 4511.00
DRAWN BY: CHECKED BY:
DATE: 2/24/03
SCALE: AS NOTED
TITLE: INTERIOR ELEVATIONS

DRAWING NO: A7.1 5

ALL IDEAS, DESIGN ARRANGEMENTS AND PLANS INDICATED OR REPRESENTED BY THIS DRAWING ARE AND SHALL REMAIN THE PROPERTY OF CARRIER JOHNSON AND SHALL NOT BE USED IN WHOLE OR IN PART FOR ANY PURPOSE WHATSOEVER WITHOUT THE WRITTEN PERMISSION OF CARRIER JOHNSON. FILING THESE DRAWINGS OR SPECIFICATIONS WITH ANY PUBLIC AGENCY IS NOT A PUBLICATION OF SAME. NO COPYING, REPRODUCTION OR USE THEREOF IS PERMISSIBLE WITHOUT THE CONSENT OF CARRIER JOHNSON.

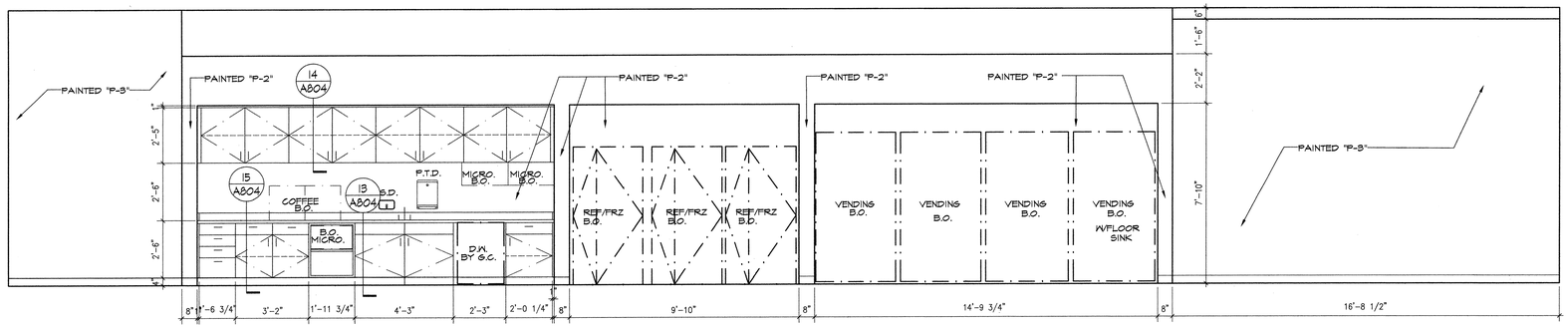

STAFF BREAK 1703
SCALE: 3/8" = 1'-0"

1

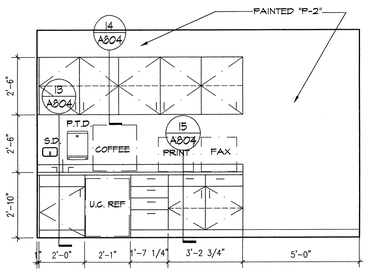

SUPPLIES 1513
SCALE: 3/8" = 1'-0"

2

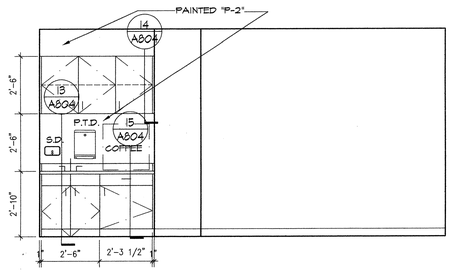

WORK AREA 2125
SCALE: 3/8" = 1'-0"

3

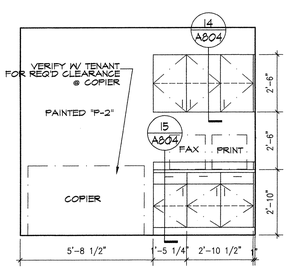

WORK AREA 2125
SCALE: 3/8" = 1'-0"

4

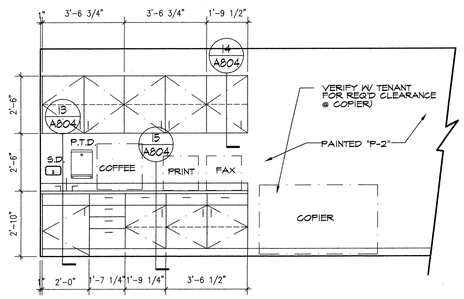

STORAGE/FILES 2807
SCALE: 3/8" = 1'-0"

5

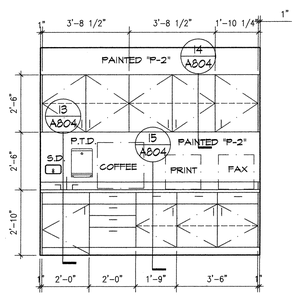

COPY/WAITING 3101
SCALE: 3/8" = 1'-0"

6

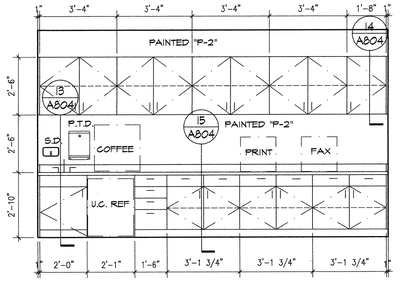

COFFEE/STORAGE 2314
SCALE: 3/8" = 1'-0"

7

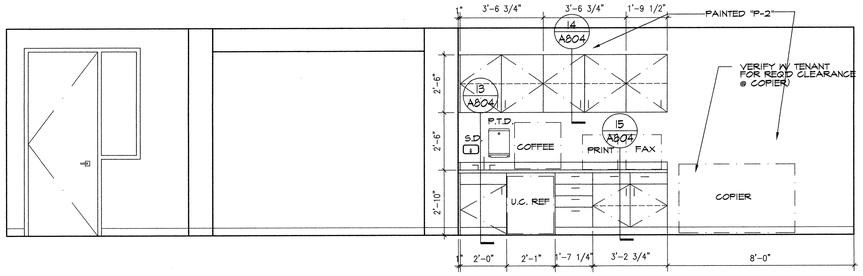

COFFEE/STORAGE 2312
SCALE: 3/8" = 1'-0"

8

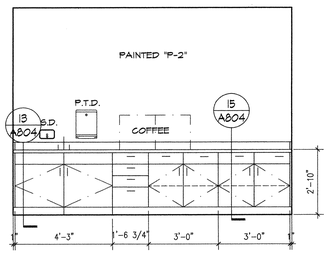

SERVING ROOM 1205/1207
SCALE: 3/8" = 1'-0"

9

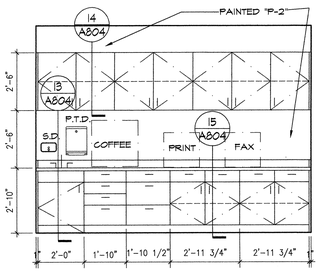

WORK AREA 1308
SCALE: 3/8" = 1'-0"

10

CARRIER JOHNSON
ARCHITECTURE
INTERIOR DESIGN
PLANNING
GORDON R. CARRIER AIA
MICHAEL C. JOHNSON AIA
WILLIAM C. BOCKEN AIA
DEBORAH P. ELLIOTT IIDA
2600 MICHELSON DRIVE
SUITE 400
IRVINE, CALIFORNIA
92612
TEL 949 955-2353
FAX 949 955-2377
1301 THIRD AVENUE
SAN DIEGO, CALIFORNIA
92101
TEL 619 239-2353
FAX 619 239-6227

RECORD DOCUMENTS
THESE DOCUMENTS RELEASED BY CARRIER JOHNSON FOR CONSTRUCTION REFLECT ALL ADDENDA, CHANGES AND CLARIFICATIONS ISSUED DURING THE CONSTRUCTION PROCESS, AND ARE BASED ON MARKED-UP INFORMATION PROVIDED BY THE CONTRACTOR AND/OR HIS SUBCONTRACTORS. ALTHOUGH THE INFORMATION CARRIER JOHNSON CANNOT AND DOES NOT WARRANT THE ACCURACY AND/OR COMPLETENESS OF THIS INFORMATION AND HEREBY DISCLAIMS RESPONSIBILITY FOR ALL ERRORS AND OMISSIONS WHICH MAY BE INCORPORATED THEREIN AS A RESULT. FUTURE CONSTRUCTION PLANNING MUST INCLUDE FIELD CONFIRMATION OF EXISTING CONDITIONS.

ONTARIO PD:: HEADQUARTERS
2534 S. ARCHIBALD AVE., ONTARIO, CALIFORNIA 91761

FO3 Field Order #13 07.01.03
5 Addendum 5 04.21.2003
3 Addendum 3
2 Addendum 2/Bldg. Dept. Re-Submittal 03.20.2003
Building Dept. Submittal 02.24.2003

ISSUES:
DIRECTORY/FILE NUMBER: 4511-A72
XREF'S DRAWINGS:
PROJECT NUMBER: 4511.00
DRAWN BY: CHECKED BY:
DATE: 2/24/03
SCALE: AS NOTED
TITLE: INTERIOR ELEVATIONS

DRAWING NO: A7.2 5

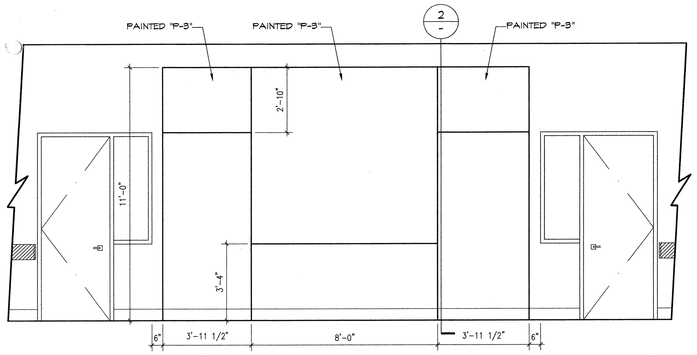

CORRIDOR 1401
SCALE: 3/8" = 1'-0"

1

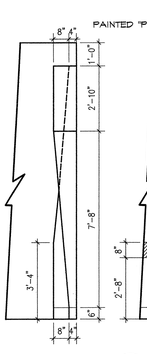

SECTION
SCALE: 3/8" = 1'-0"

2

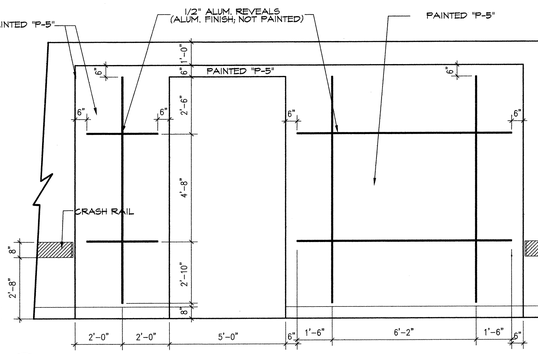

CORRIDOR 1601/1701
SCALE: 3/8" = 1'-0"

3

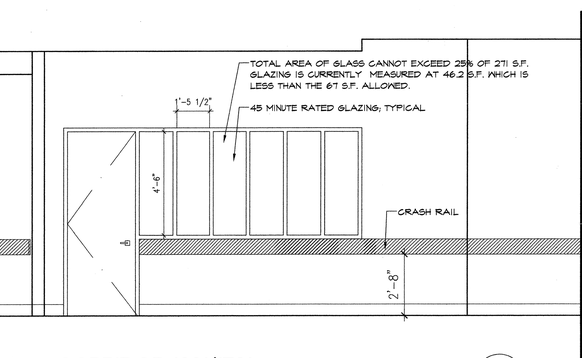

CORRIDOR 1601/1701
SCALE: 3/8" = 1'-0"

3

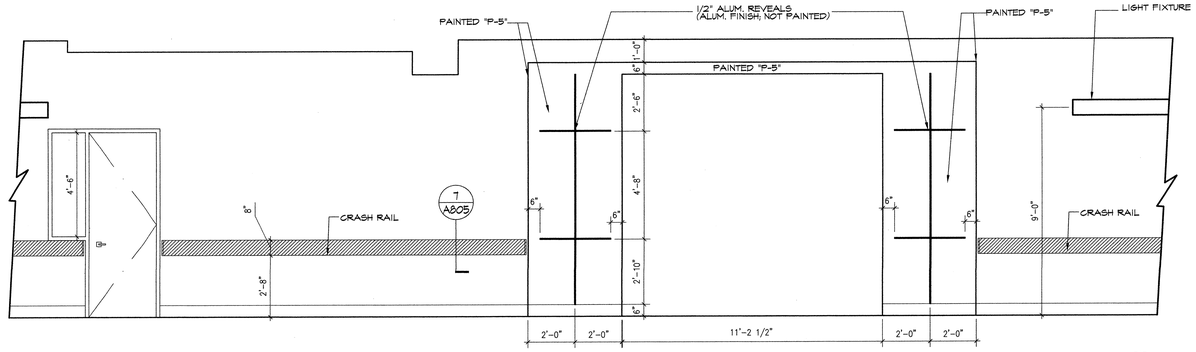

CORRIDOR 1601/1602
SCALE: 3/8" = 1'-0"

4

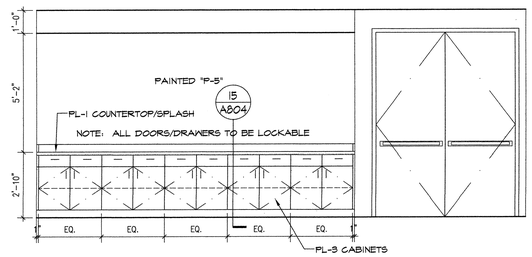

MULTIPURPOSE 1202
SCALE: 3/8" = 1'-0"

5

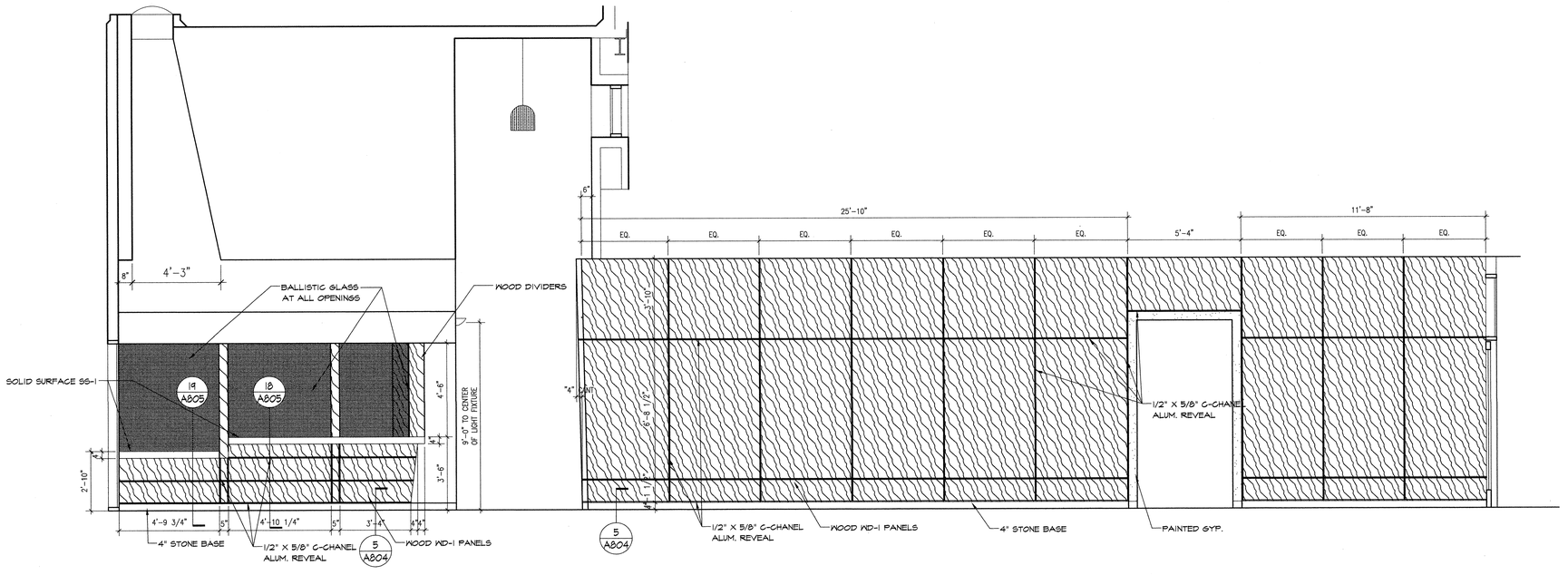

LOBBY 1100
SCALE: 3/8" = 1'-0"

6

ALL IDEAS, DESIGN, ARRANGEMENTS, OR PLANS INDICATED OR REPRESENTED BY THIS DRAWING, ALL OF WHICH ARE PROPRIETARY TO CARRIER JOHNSON, ARE AND SHALL REMAIN THE PROPERTY OF CARRIER JOHNSON. ALL RIGHTS ARE RESERVED. NO PART OF THIS DRAWING SHALL BE USED BY, OR DISCLOSED TO ANY PERSON, FIRM, OR CORPORATION FOR ANY PURPOSE WHATSOEVER WITHOUT THE WRITTEN PERMISSION OF CARRIER JOHNSON. FILING THESE DRAWINGS OR SPECIFICATIONS WITH ANY PUBLIC AGENCY IS NOT A PUBLICATION OF SAME. NO COPYING, REPRODUCTION OR USE THEREOF IS PERMISSIBLE WITHOUT THE CONSENT OF CARRIER JOHNSON.

CARRIER JOHNSON
ARCHITECTURE
INTERIOR DESIGN
PLANNING
GORDON R. CARRIER AIA
MICHAEL C. JOHNSON AIA
WILLIAM C. BOCKEN AIA
DEBORAH P. ELLIOTT IIDA
2600 MICHELSON DRIVE
SUITE 400
IRVINE, CALIFORNIA
92612
TEL 949 955-2353
FAX 949 955-2377
1301 THIRD AVENUE
SAN DIEGO, CALIFORNIA
92101
TEL 619 239-2353
FAX 619 239-5227

RECORD DOCUMENTS
THESE RECORD DOCUMENTS WERE PREPARED BY CARRIER JOHNSON FOR USE BY THE OWNER. THESE RECORD DOCUMENTS WILL SHOW THE REPORTED LOCATION OF THE WORK AND SIGNIFICANT CHANGES MADE DURING THE CONSTRUCTION PROCESS, AND ARE BASED ON LIMITED INFORMATION PROVIDED BY THE CONTRACTOR OR AND OTHER PARTIES WHICH WILL BE ASSUMED RELIABLE. CARRIER JOHNSON CANNOT AND DOES NOT WARRANT THE ACCURACY OF SUCH INFORMATION AND DOES NOT WARRANT THAT AND SHALL NOT BE RESPONSIBLE FOR ANY ERRORS OR OMISSIONS WHICH MAY BE INCORPORATED THEREIN AS A RESULT. FIELD VERIFICATION SHALL ALWAYS BE MADE TO INCLUDE FIELD CONFIRMATION OF EXISTING CONDITIONS.

ONTARIO PD:: HEADQUARTERS
2534 S. ARCHIBALD AVE., ONTARIO, CALIFORNIA 91761

Field Order #13 07.01.03
5 Addendum 5 04.21.2003
3 Addendum 3
2 Addendum 2/Bldg. Dept. Re-Submittal 03.20.2003
Building Dept. Submittal 02.24.2003

ISSUES:
DIRECTORY/FILE NUMBER: 4511-A72
XREF'S DRAWINGS:
PROJECT NUMBER: 4511.00
DRAWN BY: CHECKED BY:
DATE: 2/24/03
SCALE: AS NOTED
TITLE: INTERIOR ELEVATIONS

DRAWING NO: A7.3 5

ALL IDEAS, DESIGN ARRANGEMENTS & PLANS INDICATED OR REPRESENTED BY THIS DRAWING & WRITTEN MATERIAL APPEARING HEREIN CONSTITUTE ORIGINAL & UNPUBLISHED WORK OF CARRIER JOHNSON & SHALL NOT BE USED BY, OR DISCLOSED TO ANY PERSON, FIRM, OR CORPORATION FOR ANY PURPOSE WHATSOEVER WITHOUT THE WRITTEN PERMISSION OF CARRIER JOHNSON. ALL IDEAS, DESIGN ARRANGEMENTS OR PLANS INDICATED OR REPRESENTED BY THIS DRAWING SHALL BE USED BY, OR DISCLOSED TO ANY PERSON, FIRM, OR CORPORATION FOR ANY PURPOSE WHATSOEVER WITHOUT THE WRITTEN PERMISSION OF CARRIER JOHNSON. NO COPYING, REPRODUCTION OR USE THEREOF IS PERMISSIBLE WITHOUT THE CONSENT OF CARRIER JOHNSON, AND SHALL BE RETURNED UPON REQUEST. THESE DRAWINGS OR SPECIFICATIONS WITH ANY PUBLIC AGENCY IS NOT A PUBLICATION OF SAME.

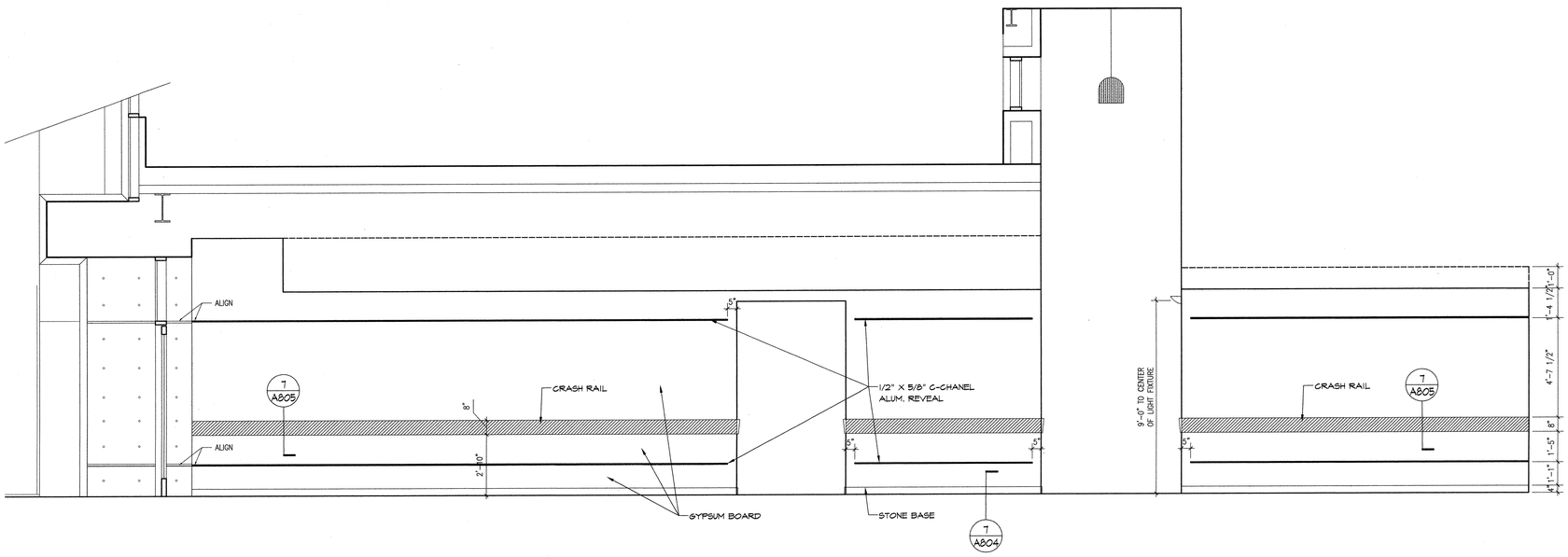

LOBBY 1100
SCALE: 3/8" = 1'-0"

1

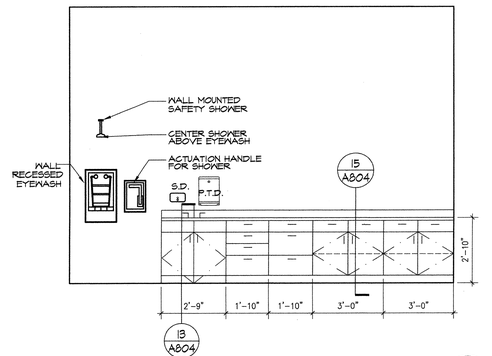

CENTRAL EVIDENCE STORAGE 4604
SCALE: 3/8" = 1'-0"

2

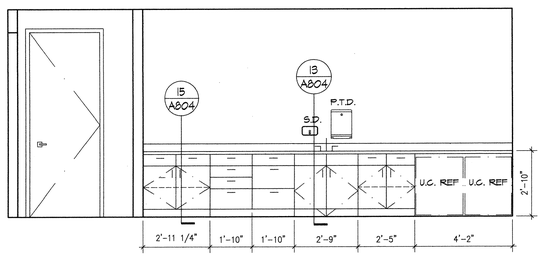

OFFICER BAG + TAG 4608
SCALE: 3/8" = 1'-0"

3

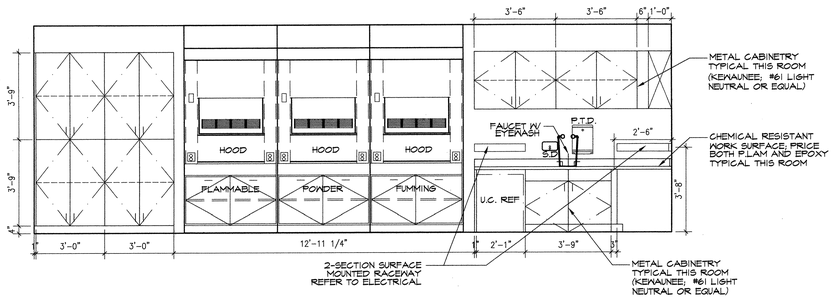

I.D. WORKROOM LAB 2805
SCALE: 3/8" = 1'-0"

4

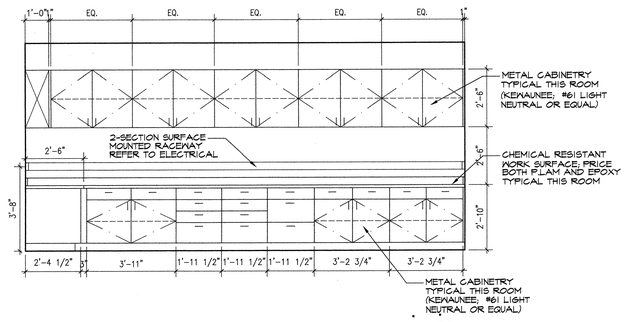

I.D. WORKROOM LAB 2805
SCALE: 3/8" = 1'-0"

5

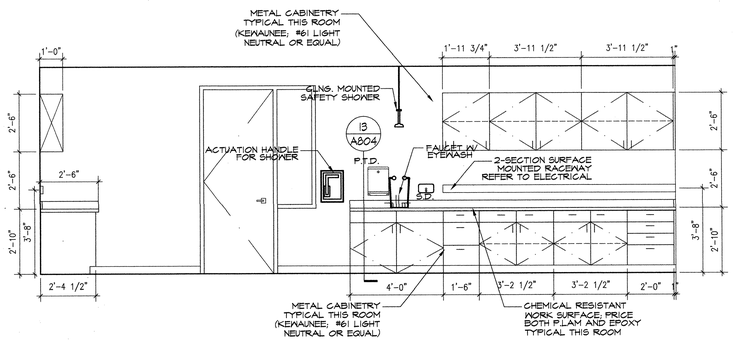

I.D. WORKROOM LAB 2805
SCALE: 3/8" = 1'-0"

6

5

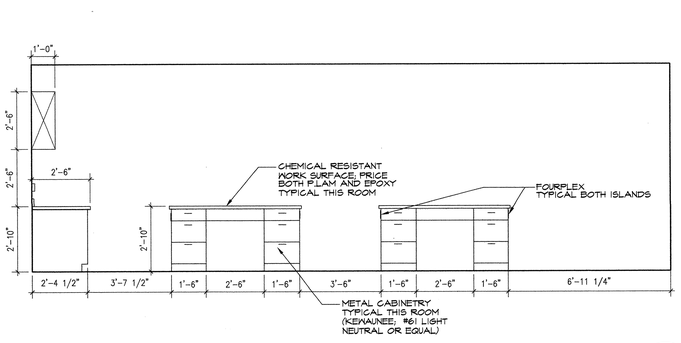

I.D. WORKROOM LAB 2805; (ISLAND TYP. BOTH SIDES)
SCALE: 3/8" = 1'-0"

7

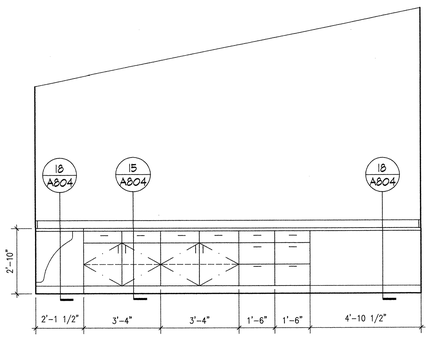

WORK AREA 4504
SCALE: 3/8" = 1'-0"

8

ARCHITECTURE
INTERIOR DESIGN
PLANNING

CARRIER JOHNSON

GORDON R. CARRIER AIA
MICHAEL C. JOHNSON AIA

WILLIAM C. BOCKEN AIA
DEBORAH F. ELLIOTT IIDA

2600 MICHELSON DRIVE
SUITE 400
IRVINE, CALIFORNIA
92612

TEL 949 955-2353
FAX 949 955-2377

1301 THIRD AVENUE
SAN DIEGO, CALIFORNIA
92101

TEL 619 239-2353
FAX 619 239-6227

RECORD DOCUMENTS
THESE DOCUMENTS RELEASED BY CARRIER JOHNSON FOR USE AS RECORD DOCUMENTS ARE BASED ON KNOWN EXISTING CONDITIONS AND ON INFORMATION PROVIDED BY OTHERS DURING THE CONSTRUCTION PROCESS, AND ARE BASED ON LIMITED OBSERVATIONS DURING THE CONSTRUCTION PROCESS AND OTHER PARTIES WHICH WILL BE ASSUMED RELIABLE. CARRIER JOHNSON CANNOT AND DOES NOT WARRANT THE ACCURACY AND/OR COMPLETENESS OF THE INFORMATION AS-BUILT AND/OR PROVIDED BY OTHERS AND ANY ERRORS OR OMISSIONS WHICH MAY BE INCORPORATED THEREIN AS A RESULT. FUTURE CONSTRUCTION PLANNING MUST INCLUDE FIELD CONFIRMATION OF EXISTING CONDITIONS.

ONTARIO PD:: HEADQUARTERS

2534 S. ARCHIBALD AVE., ONTARIO, CALIFORNIA 91761

5 Field Order #13 FO. 07.01.03
5 Addendum 5 04.21.2003
3 Addendum 3
2 Addendum 2/Bldg. Dept. Re-Submittal 03.20.2003
Building Dept. Submittal 02.24.2003

ISSUES:
DIRECTORY/FILE NUMBER: 4511-A74
XREF'S DRAWINGS:
PROJECT NUMBER: 4511.00
DRAWN BY: CHECKED BY:
DATE: 2/24/03
SCALE: AS NOTED
TITLE: INTERIOR ELEVATIONS

DRAWING NO: A7.4 5

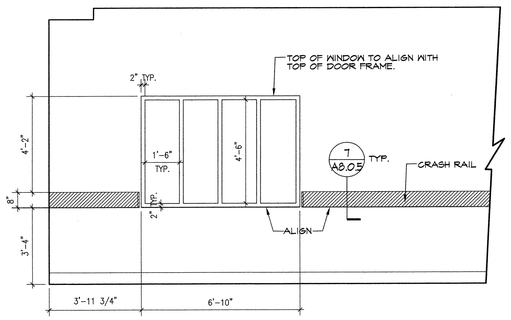

CORRIDOR 1501
SCALE: 3/8" = 1'-0"

1 △5

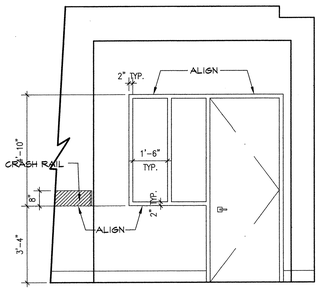

CORRIDOR 1801
SCALE: 3/8" = 1'-0"

2

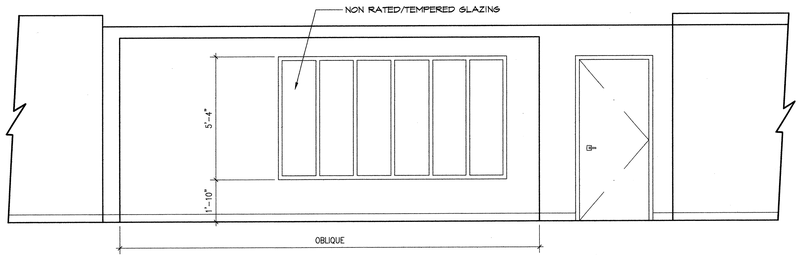

COURTYARD 2319 - INTERIOR EAST
SCALE: 3/8" = 1'-0"

3 △5

DSM - LAW ENFORCEMENT PRODUCTS
CONTACT: 1 (866) 276-0445
OR APPROVED EQUAL

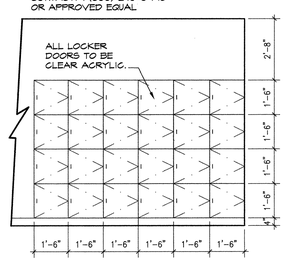

LOCKERS 4205
SCALE: 3/8" = 1'-0"

4 △5

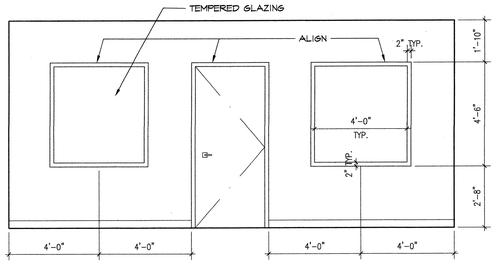

JUVENILE WAIT 4209
SCALE: 3/8" = 1'-0"

5

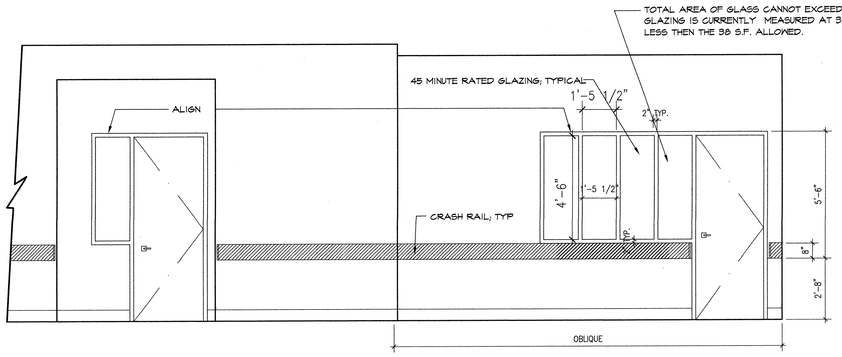

INTERSECTION 4101/CORRIDOR 1612
SCALE: 3/8" = 1'-0"

6 △5

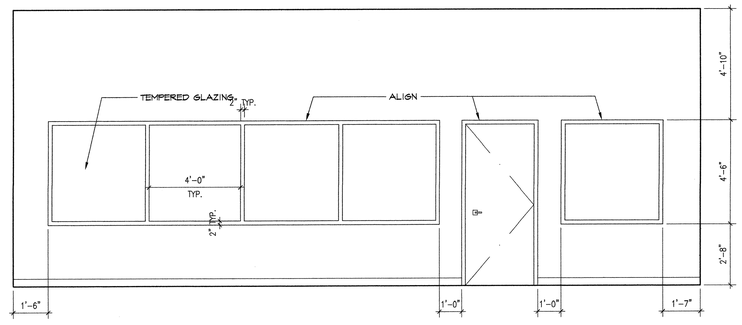

EVIDENCE OFFICE AREA 4611
SCALE: 3/8" = 1'-0"

7

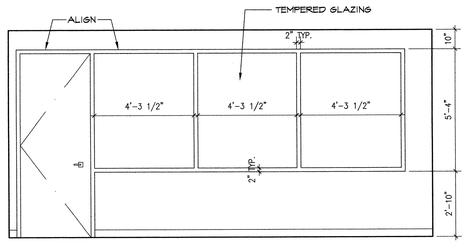

DISPATCH SUPERVISORS 5002
SCALE: 3/8" = 1'-0"

8

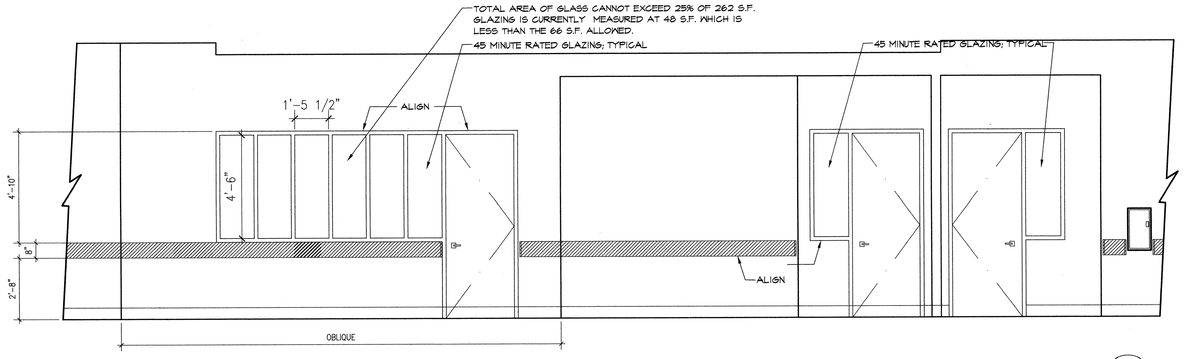

CORRIDOR 4601
SCALE: 3/8" = 1'-0"

9 △5

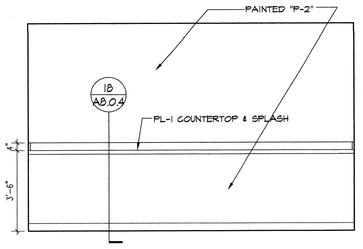

WORK ROOM 5014
SCALE: 3/8" = 1'-0"

10

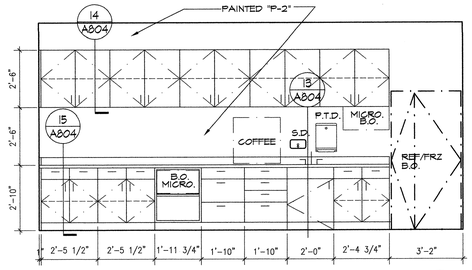

BREAK ROOM 5008
SCALE: 3/8" = 1'-0"

11

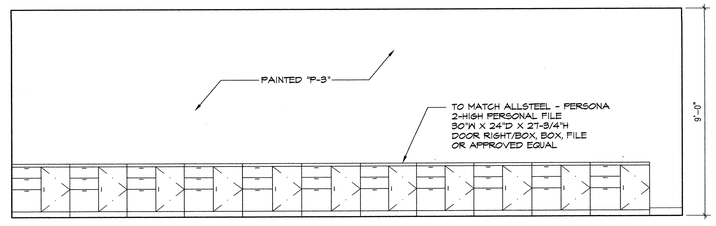

TEAMING 1514
SCALE: 3/8" = 1'-0"

12 △5

ALL IDEAS, DESIGN, ARRANGEMENTS AND PLANS INDICATED OR REPRESENTED BY THIS DRAWING ARE OWNED BY, AND THE PROPERTY OF CARRIER JOHNSON - AND WERE CREATED, EVOLVED AND DEVELOPED FOR USE ON, AND IN CONNECTION WITH THIS PROJECT. NONE OF SUCH IDEAS, DESIGN, ARRANGEMENTS OR PLANS SHALL BE USED BY OR DISCLOSED TO ANY PERSON OR ENTITY FOR ANY PURPOSE WHATSOEVER WITHOUT THE WRITTEN PERMISSION OF CARRIER JOHNSON. FILING THESE DRAWINGS OR SPECIFICATIONS WITH ANY PUBLIC AGENCY IS NOT A PUBLICATION OF SAME. NO COPYING, REPRODUCTION OR USE THEREOF IS PERMISSIBLE WITHOUT THE CONSENT OF CARRIER JOHNSON.

CARRIER JOHNSON
ARCHITECTURE
INTERIOR DESIGN
PLANNING
GORDON R. CARRIER AIA
MICHAEL C. JOHNSON AIA
WILLIAM C. BOCKEN AIA
DEBORAH P. ELLIOTT IIDA
2600 MICHELSON DRIVE
SUITE 400
IRVINE, CALIFORNIA
92612
TEL 949 955-2353
FAX 949 955-2377
1301 THIRD AVENUE
SAN DIEGO, CALIFORNIA
92101
TEL 619 239-2353
FAX 619 239-6227

RECORD DOCUMENTS
THESE DOCUMENTS RELEASED BY CARRIER JOHNSON FOR CONSTRUCTION PURPOSES ONLY AFTER ALL REVISIONS AS TO LOCATION OF THE WORK, AND SIGNIFICANT CHANGES MADE DURING THE CONSTRUCTION PROCESS, AND ARE BASED ON UNVERIFIED INFORMATION PROVIDED BY THE CONTRACTOR AND OTHERS. THESE DRAWINGS WILL BE REVISED ONLY WHEN CARRIER JOHNSON CANNOT AND DOES NOT WARRANT THE ACCURACY AND/OR COMPLETENESS OF THE INFORMATION AND ASSUMES NO RESPONSIBILITY FOR ERRORS OR OMISSIONS AS A RESULT. FUTURE CONSTRUCTION PLANNING MUST INCLUDE FIELD CONFIRMATION OF EXISTING CONDITIONS.

ONTARIO PD:: HEADQUARTERS
2534 S. ARCHIBALD AVE., ONTARIO, CALIFORNIA 91761

△3 Field Order #13 07.01.03
△5 Addendum 5 04.21.2003
△3 Addendum 3
△2 Addendum 2/Bldg. Dept. Re-Submittal 03.20.2003
Building Dept. Submittal 02.24.2003

ISSUES:
DIRECTORY/FILE NUMBER: 4511-A75
XREF'S DRAWINGS:
PROJECT NUMBER: 4511.00
DRAWN BY: CHECKED BY:
DATE: 2/24/03
SCALE: AS NOTED
TITLE: INTERIOR ELEVATIONS

DRAWING NO: A7.5 △5

ALL IDEAS, DESIGN, ARRANGEMENTS AND PLANS INDICATED OR REPRESENTED BY THIS DRAWING ARE OWNED BY, AND THE PROPERTY OF CARRIER JOHNSON - AND WERE CREATED, EVOLVED AND DEVELOPED FOR USE ON, AND IN CONNECTION WITH THIS PROJECT. NONE OF SUCH IDEAS, DESIGN, ARRANGEMENTS, OR PLANS SHALL BE USED BY, OR DISCLOSED TO ANY PERSON, FIRM, OR CORPORATION FOR ANY PURPOSE WHATSOEVER WITHOUT THE WRITTEN PERMISSION OF CARRIER JOHNSON. FILING THESE DRAWINGS OR SPECIFICATIONS WITH ANY PUBLIC AGENCY IS NOT A PUBLICATION OF SAME. NO COPYING, REPRODUCTION OR USE THEREOF IS PERMISSIBLE WITHOUT THE CONSENT OF CARRIER JOHNSON.

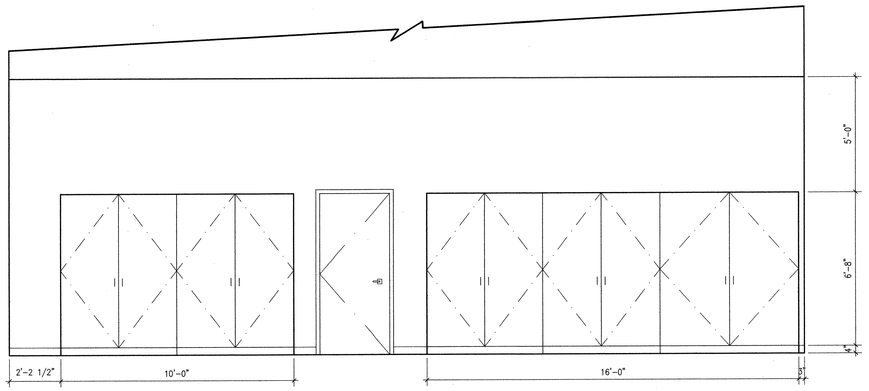

EVIDENCE LOCKERS 4604 NORTH
SCALE: 3/8" = 1'-0"

1

LOCKING MECHANISM - CONTROL SIDE
FULL LENGTH DOOR LOCKED CLOSED BY 12 GAUGE PLATED STEEL LATCH/STRAP. TOP AND BOTTOM ARE BAYONET ENGAGED UNTIL RAISED AND PIVOTED CLEAR TO ALLOW DOOR TO OPEN. NO HANDLING LINKAGE MECHANICAL PARTS FOR THIS LOCK IS PERMITTED.

DSM - LAW ENFORCEMENT PRODUCTS
EVIDENCE HANDLING SYSTEMS
PASS-THRU LOCKERS
CONTACT: 1 (866) 276-0445
OR APPROVED EQUAL

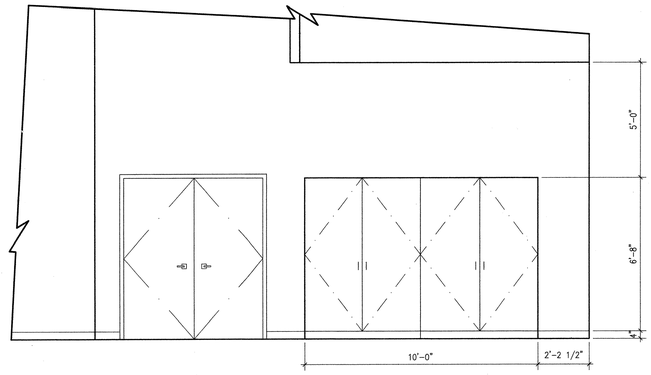

EVIDENCE LOCKERS 4604 EAST
SCALE: 3/8" = 1'-0"

2

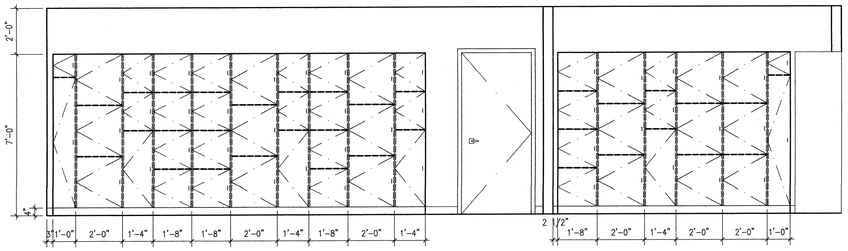

EVIDENCE LOCKERS 4608
SCALE: 3/8" = 1'-0"

3

LOCKING MECHANISM - OFFICER SIDE
NO KEY REQUIRED. SPRING LATCH LOCKS WHEN DOOR IS PUSHED CLOSED. DOOR CAN BE UNLOCKED FROM CONTROL SIDE ONLY.

DSM - LAW ENFORCEMENT PRODUCTS
EVIDENCE HANDLING SYSTEMS
PASS-THRU LOCKERS
CONTACT: 1 (866) 276-0445
OR APPROVED EQUAL

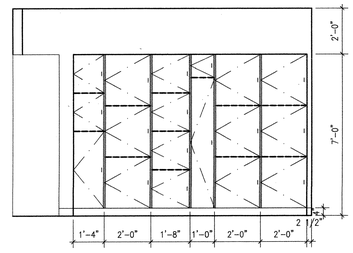

EVIDENCE LOCKERS 4607
SCALE: 3/8" = 1'-0"

4

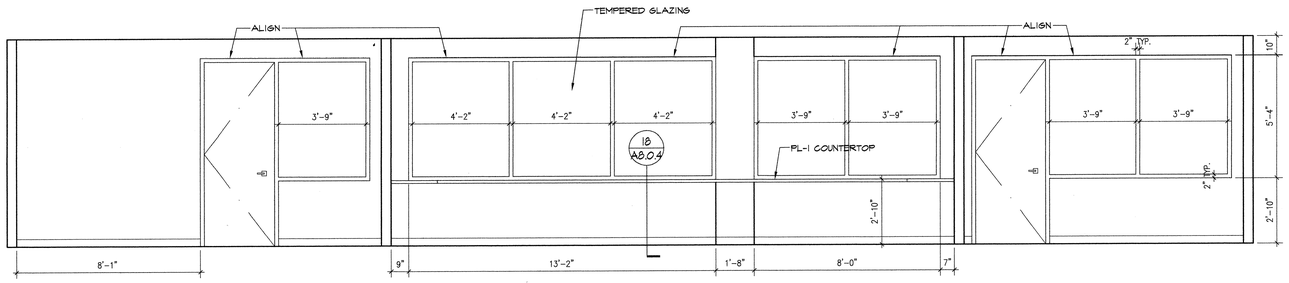

READY ROOMS 3405/3508 + RANGE CONTROL 3406
SCALE: 3/8" = 1'-0"

5

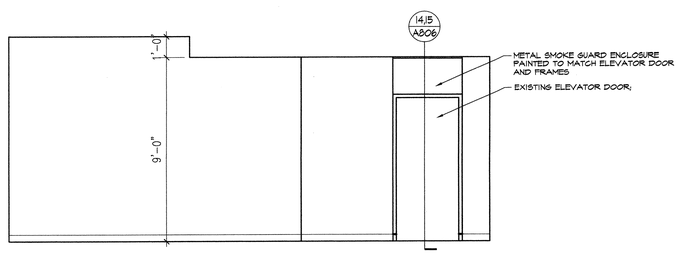

ELEVATOR/LOBBY 1901
SCALE: 3/8" = 1'-0"

6 △5

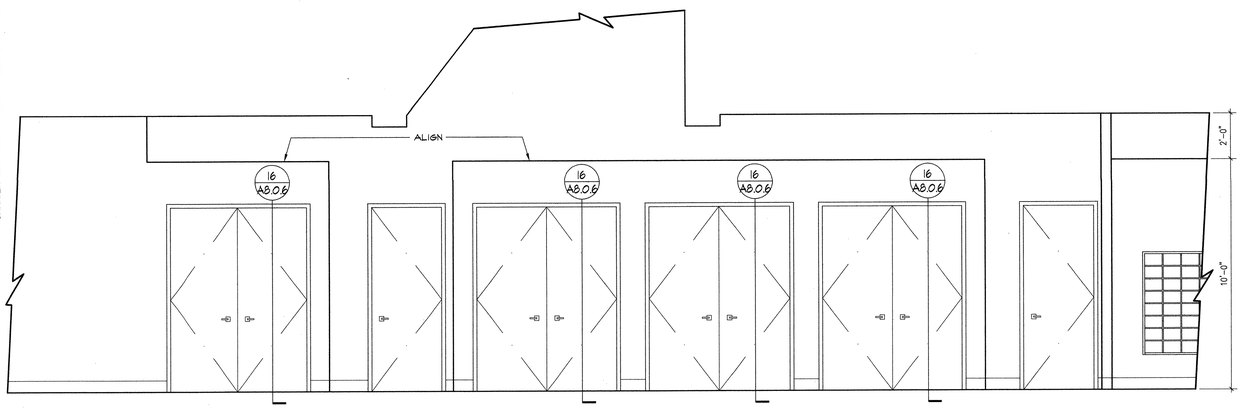

CORRIDOR 1401/1402
SCALE: 3/8" = 1'-0"

7

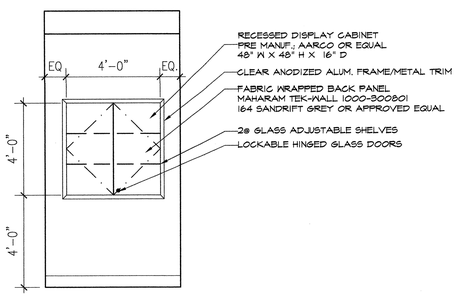

CORRIDOR 2301
SCALE: 3/8" = 1'-0"

8 △5

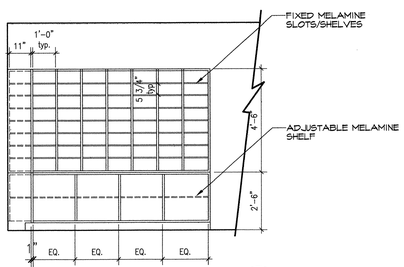

STORAGE 4207
SCALE: 3/8" = 1'-0"

9 △5

ARCHITECTURE
INTERIOR DESIGN
PLANNING

CARRIER JOHNSON

GORDON R. CARRIER AIA
MICHAEL C. JOHNSON AIA

WILLIAM C. BOCKEN AIA
DEBORAH P. ELLIOTT IIDA

2600 MICHELSON DRIVE
SUITE 450
IRVINE, CALIFORNIA
92612

TEL 949 955-2353
FAX 949 955-2377

1301 THIRD AVENUE
SAN DIEGO, CALIFORNIA
92101

TEL 619 239-2353
FAX 619 239-6227

RECORD DOCUMENTS
THESE DOCUMENTS RELEASED BY CARRIER JOHNSON FOR USE AS RECORD DOCUMENTS WILL SHOW THE REPORTED CONDITIONS OF THE BUILDING AS ACTUALLY CONSTRUCTED DURING THE CONSTRUCTION PROCESS, AND ARE BASED ON UNVERIFIED INFORMATION PROVIDED BY THE CONTRACTOR AND OTHER PARTIES WHICH WILL BE ASSUMED RELIABLE AS CARRIER JOHNSON CANNOT AND DOES NOT WARRANT THE ACCURACY AND/OR COMPLETENESS OF THIS INFORMATION AND SHALL NOT BE RESPONSIBLE FOR ANY ERRORS OR OMISSIONS WHICH MAY BE CONTAINED THEREIN AS A RESULT. FUTURE CONSTRUCTION PLANNING MUST INCLUDE FIELD CONFIRMATION OF EXISTING CONDITIONS.

ONTARIO PD:: HEADQUARTERS

2534 S. ARCHIBALD AVE., ONTARIO, CALIFORNIA 91761

△FO Field Order #13 07.01.03
△5 Addendum 5 04.21.2003
△3 Addendum 3
△2 Addendum 2/Bldg. Dept. Re-Submittal 03.20.2003
Building Dept. Submittal 02.24.2003
ISSUES:
DIRECTORY/FILE NUMBER: 4511-A76
XREF'S DRAWINGS:
PROJECT NUMBER: 4511.00
DRAWN BY: CHECKED BY:
DATE: 2/24/03
SCALE: AS NOTED
TITLE: INTERIOR ELEVATIONS

DRAWING NO: A7.6

△5

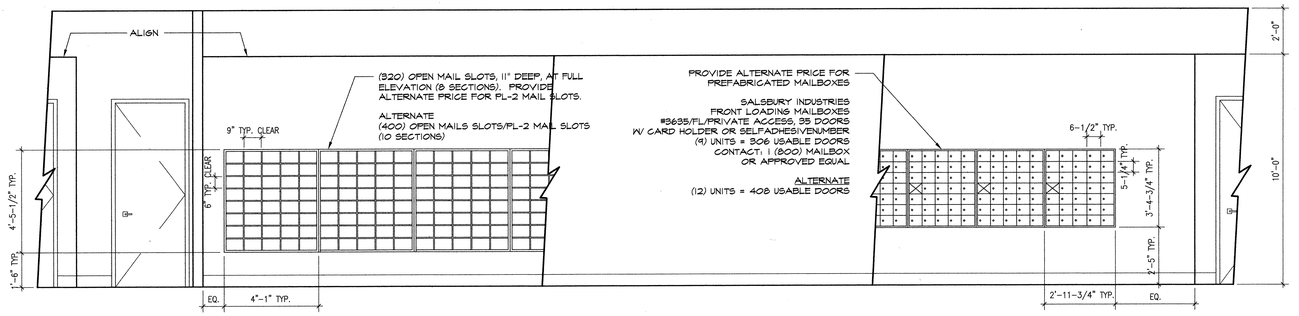

CORRIDOR 1501
SCALE: 3/8" = 1'-0"
1

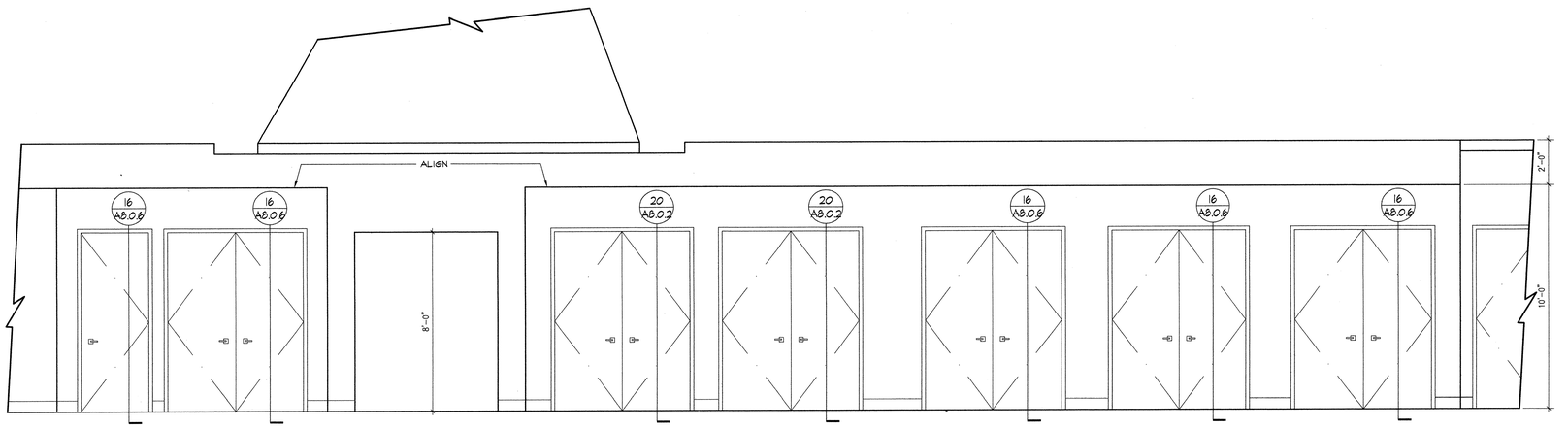

CORRIDOR 4101/4114
SCALE: 3/8" = 1'-0"
2

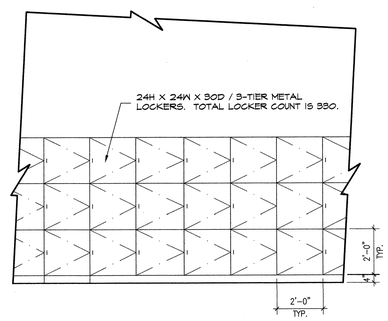

EXTERIOR LOCKERS (TYPICAL)
SCALE: 3/8" = 1'-0"
3

ALL IDEAS, DESIGN, ARRANGEMENTS AND PLANS INDICATED OR REPRESENTED BY THIS DRAWING AND OTHER PAPERS ARE THE PROPERTY OF CARRIER JOHNSON AND WERE CREATED, EVOLVED AND DEVELOPED FOR USE ON AND IN CONNECTION WITH THIS PROJECT. NONE OF SUCH IDEAS, DESIGN, ARRANGEMENTS, OR PLANS SHALL BE USED BY, OR DISCLOSED TO ANY PERSON, FIRM, OR CORPORATION FOR ANY PURPOSE WHATSOEVER WITHOUT THE WRITTEN PERMISSION OF CARRIER JOHNSON. FILING THESE DRAWINGS OR SPECIFICATIONS WITH ANY PUBLIC AGENCY IS NOT A PUBLICATION OF SAME. NO COPYING, REPRODUCTION OR USE THEREOF IS PERMISSIBLE WITHOUT THE CONSENT OF CARRIER JOHNSON.

CARRIER JOHNSON
ARCHITECTURE
INTERIOR DESIGN
PLANNING

GORDON R. CARRIER AIA
MICHAEL C. JOHNSON AIA

WILLIAM C. BOCKEN AIA
DEBORAH P. ELLIOTT IIDA

2600 MICHELSON DRIVE
SUITE 400
IRVINE, CALIFORNIA
92612

TEL 949 955-2353
FAX 949 955-2377

1301 THIRD AVENUE
SAN DIEGO, CALIFORNIA
92101

TEL 619 239-2353
FAX 619 239-6227

RECORD DOCUMENTS
THESE DOCUMENTS RELEASED BY CARRIER JOHNSON FOR USE AS RECORD DOCUMENTS WILL SHOW THE REPORTED LOCATION OF THE WORK AND SIGNIFICANT CHANGES MADE DURING THE CONSTRUCTION PROCESS, AND ARE BASED ON UNVERIFIED INFORMATION PROVIDED BY THE CONTRACTOR AND OTHER PARTIES WHICH WILL BE ASSUMED RELIABLE. CARRIER JOHNSON CANNOT AND DOES NOT WARRANT THE ACCURACY AND/OR COMPLETENESS OF THIS INFORMATION AND SHALL NOT BE RESPONSIBLE FOR ANY ERRORS OR OMISSIONS WHICH MAY BE INCORPORATED THEREIN AS A RESULT. FUTURE CONSTRUCTION PLANNING MUST INCLUDE FIELD CONFIRMATION OF EXISTING CONDITIONS.

ONTARIO PD::
HEADQUARTERS
2534 S. ARCHIBALD AVE., ONTARIO, CALIFORNIA 91761

F13 Field Order #13 07.01.03
5 Addendum 5 04.21.2003
3 Addendum 3
2 Addendum 2/Bldg. Dept. Re-Submittal 03.20.2003
Building Dept. Submittal 02.24.2003

ISSUES:
DIRECTORY/FILE NUMBER: 4511-A77
XREF'S DRAWINGS:
PROJECT NUMBER: 4511.00
DRAWN BY: CHECKED BY:
DATE: 2/24/03
SCALE: AS NOTED
TITLE: INTERIOR ELEVATIONS
DRAWING NO: A7.7

5

ALL IDEAS, DESIGN, ARRANGEMENTS AND PLANS INDICATED OR REPRESENTED BY THIS DRAWING ARE OWNED BY, AND THE PROPERTY OF CARRIER JOHNSON AND WERE CREATED, EVOLVED AND DEVELOPED FOR USE ON, AND IN CONNECTION WITH THIS PROJECT. NONE OF SUCH IDEAS, DESIGNS, ARRANGEMENTS OR PLANS SHALL BE USED BY OR DISCLOSED TO ANY PERSON, FIRM OR CORPORATION FOR ANY PURPOSE WHATSOEVER WITHOUT THE WRITTEN PERMISSION OF CARRIER JOHNSON. FILING THESE DRAWINGS OR SPECIFICATIONS WITH ANY PUBLIC AGENCY IS NOT A PUBLICATION OF SAME. NO COPYING, REPRODUCTION OR USE THEREOF IS PERMISSIBLE WITHOUT THE CONSENT OF CARRIER JOHNSON.

PARTITION TYPE F

WALL TYPE	STUD SIZE	STUD GAGE	OVERALL DIM.	FIRE RATING	UL DESIGN NO.	GYPSUM TYPE	REMARKS
F	3-5/8"	20 GA	6-1/8"	2HR RATED	U425	TYPE X	

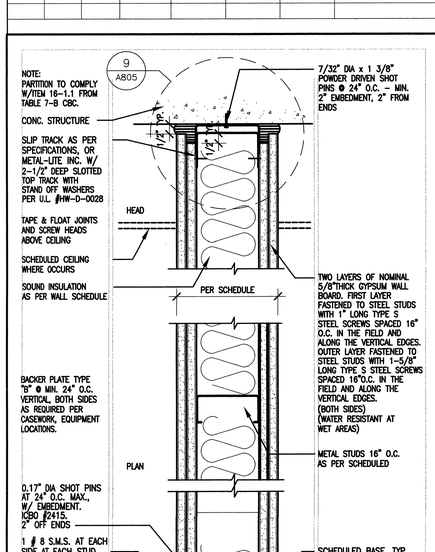

2-HOUR RATED PARTITION
SCALE: 3"=1'-0" 4511-W107 **F**

PARTITION TYPE G

WALL TYPE	STUD SIZE	STUD GAGE	OVERALL DIM.	FIRE RATING	UL DESIGN NO.	GYPSUM TYPE	REMARKS
G	3-5/8"	20	–	NR	–	X	–

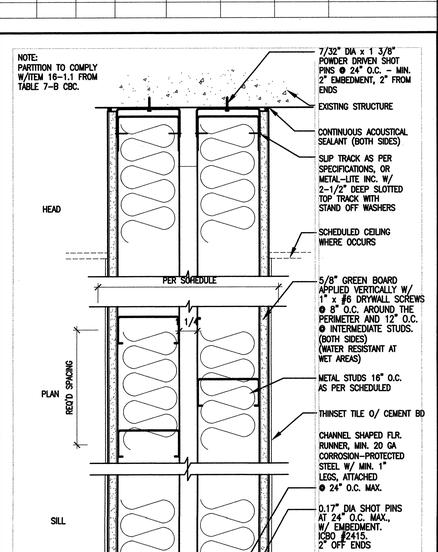

PLUMBING CHASE PARTITION
SCALE: 3"=1'-0" 4511-W111 **G**

PARTITION TYPE H

WALL TYPE	STUD SIZE	STUD GAGE	OVERALL DIM.	FIRE RATING	UL DESIGN NO.	GYPSUM TYPE	REMARKS
H	3-5/8"	20 GA	–	NR	–	TYPE X	–

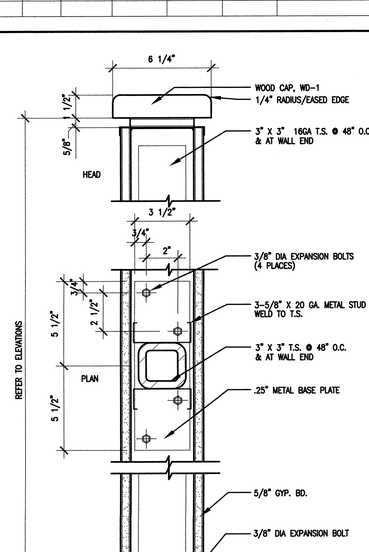

LOW HEIGHT PARTITION
SCALE: 3"=1'-0" 4511-W113 **H**

PARTITION TYPE B, B2, C3, D2

WALL TYPE	STUD SIZE	STUD GAGE	OVERALL DIM.	FIRE RATING	UL DESIGN NO.	GYPSUM TYPE	REMARKS
B/C3/D2	4"	20 GA	5-1/4"	NR	–	TYPE X	
B2	4"	20 GA	5-1/4"	NR	–	TYPE X	W/R11 UNFACED INSUL.

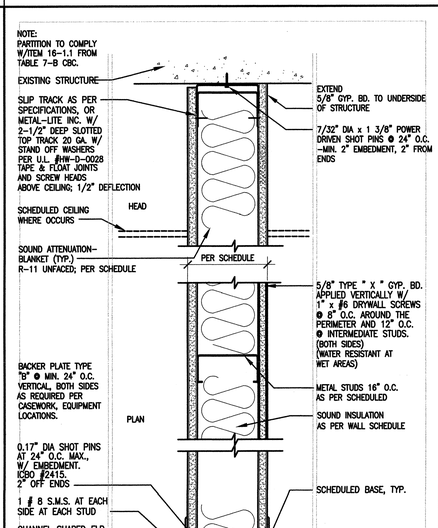

FULL HEIGHT NON-RATED PARTITION
SCALE: 3"=1'-0" 4511-W102 **B**

PARTITION TYPE A

WALL TYPE	STUD SIZE	STUD GAGE	OVERALL DIM.	FIRE RATING	UL DESIGN NO.	GYPSUM TYPE	REMARKS
A	3-5/8"	20 GA	4-7/8"	RATED	U465	TYPE X	STC 40
A2	3-5/8"	20 GA	4-7/8"	RATED	U465	TYPE X	W/ INSULATION

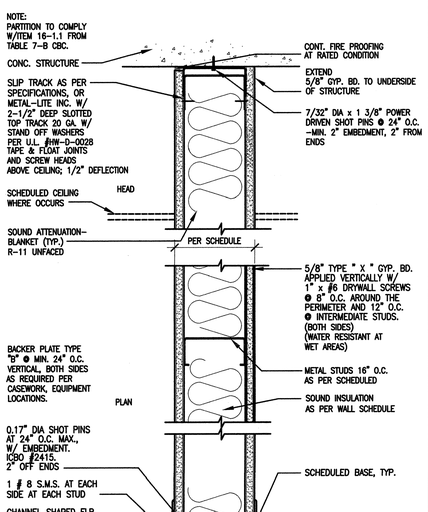

ONE HOUR RATED PARTITION
SCALE: 3"=1'-0" 4511-W101 **A**

PARTITION TYPE E

WALL TYPE	STUD SIZE	STUD GAGE	OVERALL DIM.	FIRE RATING	UL DESIGN NO.	GYPSUM TYPE	REMARKS
E	3-5/8"	20 GA	–	NR	–	TYPE X	1/2" BALLISTIC MATERIAL

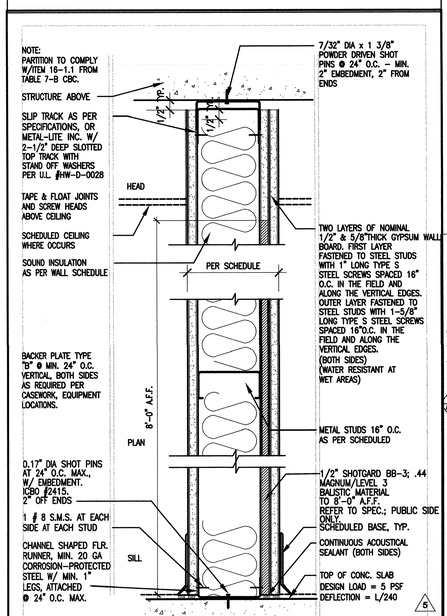

NON RATED PARTITION WITH BALLISTIC MATERIAL
SCALE: 3"=1'-0" 4511-W106 **E**

3

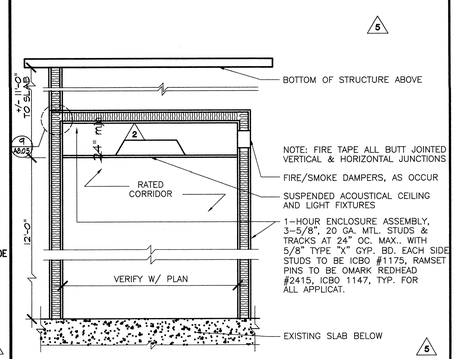

ONE-HOUR RATED TUNNEL CORRIDOR DETAIL
SCALE: AS NOTED 4511-I504 **1**

PARTITION TYPE J

WALL TYPE	STUD SIZE	STUD GAGE	OVERALL DIM.	FIRE RATING	UL DESIGN NO.	GYPSUM TYPE	REMARKS
J	3-5/8"	20 GA	–	NR	–	TYPE X	WHEN POWER IS REQD
J2	7/8"	20 GA	–	NR	–	TYPE X	WHEN POWER NOT REQD

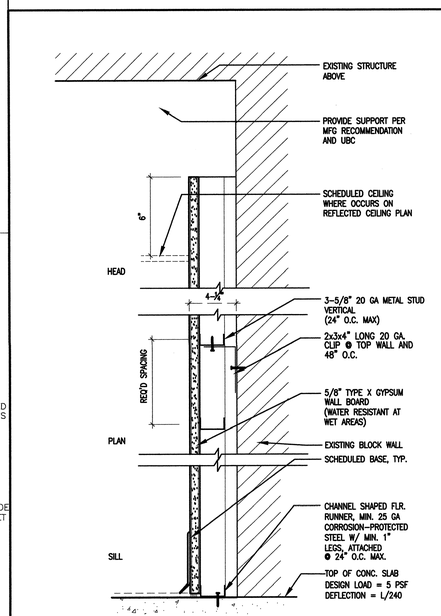

WALL FURRING
SCALE: 3"=1'-0" 4034-W114 **J**

PARTITION TYPE C, C2, D3

WALL TYPE	STUD SIZE	STUD GAGE	OVERALL DIM.	FIRE RATING	UL DESIGN NO.	GYPSUM TYPE	REMARKS
C/C2	3-5/8"	20 GA	4-7/8"	NR	–	TYPE X	W/ R11 INSUL.
D/D3	3-5/8"	20 GA	4-7/8"	NR	–	TYPE X	NO INSUL

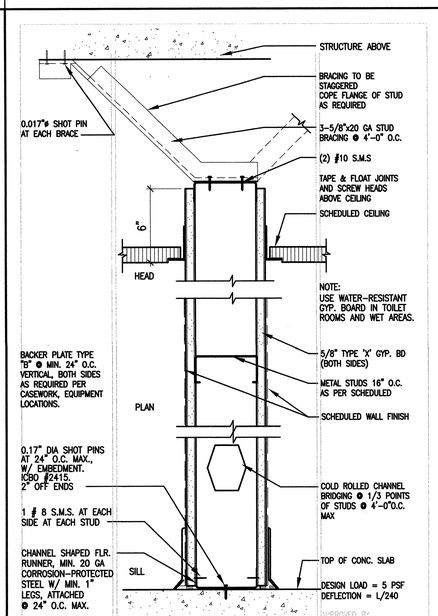

NON-RATED PARTITION
SCALE: 3"=1'-0" 4511-W105 **C**

PARTITION TYPE K

WALL TYPE	STUD SIZE	STUD GAGE	OVERALL DIM.	FIRE RATING	UL DESIGN NO.	GYPSUM TYPE	REMARKS
K	3-5/8"	20 GA	5-3/8"	NR	–	CEMENT BD	W/ R-11 INSUL

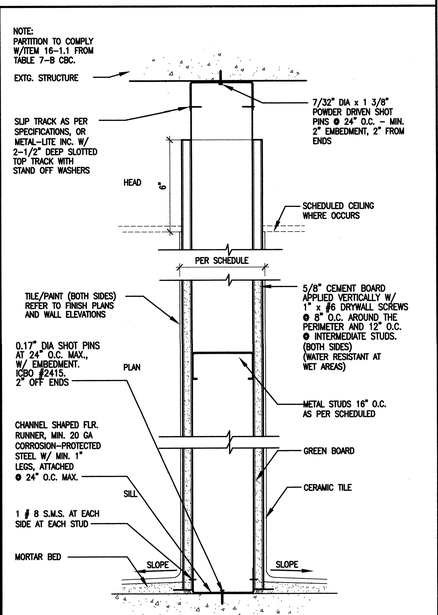

NON-RATED PARTITION
SCALE: 3"=1'-0" 4034-W110 **K**

CARRIER JOHNSON
ARCHITECTURE
INTERIOR DESIGN
PLANNING
GORDON R. CARRIER AIA
MICHAEL C. JOHNSON AIA
WILLIAM C. BOCKEN AIA
DEBORAH P. ELLIOTT IIDA
2600 MICHELSON DRIVE SUITE 400 IRVINE, CALIFORNIA 92612
TEL 949 955-2353 FAX 949 955-2377
1301 THIRD AVENUE SAN DIEGO, CALIFORNIA 92101
TEL 619 239-2353 FAX 619 239-6227

RECORD DOCUMENTS
THESE DOCUMENTS RELEASED BY CARRIER JOHNSON FOR USE AS RECORD DOCUMENTS WILL SHOW THE REPORTED LOCATION OF THE WORK AND SIGNIFICANT CHANGES MADE DURING CONSTRUCTION AS REPORTED TO CARRIER JOHNSON. UNVERIFIED INFORMATION PROVIDED BY THE CONTRACTOR AND OTHER PARTIES WHICH WILL BE ASSUMED RELIABLE. CARRIER JOHNSON HAS NOT VERIFIED AND IS NOT RESPONSIBLE FOR ACCURACY AND/OR COMPLETENESS OF THE INFORMATION AND SHALL NOT BE RESPONSIBLE FOR ANY ERRORS OR OMISSIONS WHICH MAY BE PRESENT IN THIS DOCUMENT AS A RESULT. FUTURE CONSTRUCTION PLANNING MUST INCLUDE FIELD CONFIRMATION OF EXISTING CONDITIONS.

ONTARIO PD:: HEADQUARTERS
2534 S. ARCHIBALD AVE., ONTARIO, CALIFORNIA 91761

FO Field Order #13 07.01.03
5 Addendum 5 04.21.2003
3 Addendum 3
2 Addendum 2/Bldg. Dept. Re-Submittal 03.20.2003
Building Dept. Submittal 02.24.2003

ISSUES:
DIRECTORY/FILE NUMBER: 4511-A801
XREF'S DRAWINGS:
PROJECT NUMBER: 4511.00
DRAWN BY: CHECKED BY:
DATE: 2/24/03
SCALE: AS NOTED
TITLE: WALL TYPES

DRAWING NO: A8.0.1
5

ALL IDEAS, DESIGN, ARRANGEMENTS, OR PLANS SHALL BE USED BY, OR DISCLOSED TO ANY PERSON, FIRM, OR CORPORATION FOR ANY PURPOSE WHATSOEVER WITHOUT THE WRITTEN PERMISSION OF CARRIER JOHNSON. NONE OF SUCH IDEAS, DESIGN, ARRANGEMENTS, OR PLANS SHALL BE USED BY, OR DISCLOSED TO ANY PERSON, FIRM, OR CORPORATION FOR ANY PURPOSE WHATSOEVER WITHOUT THE WRITTEN PERMISSION OF CARRIER JOHNSON. NO COPYING, REPRODUCTION OR USE THEREOF IS PERMISSIBLE WITHOUT THE CONSENT OF CARRIER JOHNSON. FILING THESE DRAWINGS OR SPECIFICATIONS WITH ANY PUBLIC AGENCY IS NOT A PUBLICATION OF SAME. NO COPYING, RE

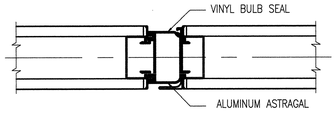

CLOSURE PANEL

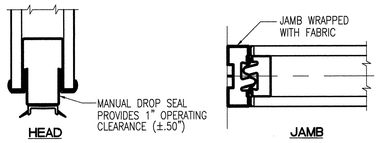

MOVEABLE PART. HEAD/JABM DETAIL
SCALE: 3"=1'-0" 4511-I120 **17**

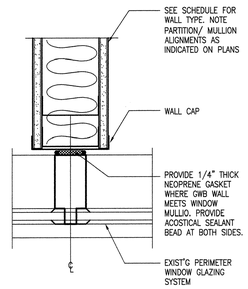

PARTITION AT MULLION
SCALE: 3"=1'-0" 4511-I116 **13**

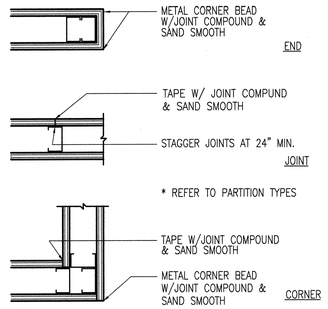

WALL FINISH TO BE LEVEL FOUR FINISH; TYPICAL THROUGHOUT

WALL FINISH DETAILS
SCALE: N.T.S. 4511-I108 **9**

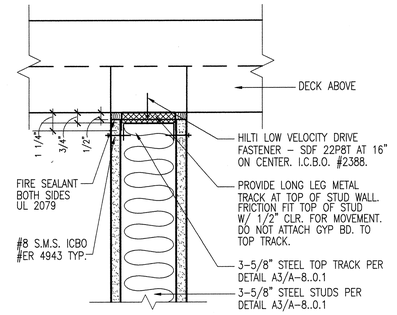

METAL STUD BRACING AT DECK
SCALE: 3"=1'-0" 4511-I104 **5**

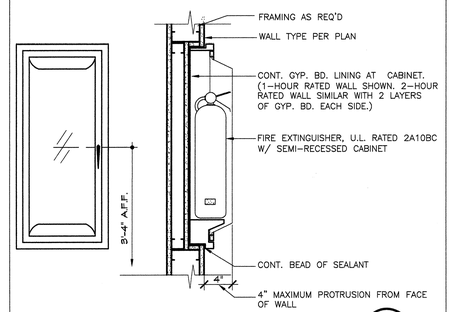

F.E.C. CABINET
SCALE: 1-1/2" 45111040 **1**

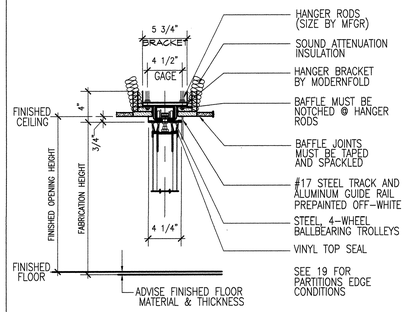

MOVEABLE PARTITION SECTION
SCALE: 1 1/2"=1'-0" 4511-I121 **18**

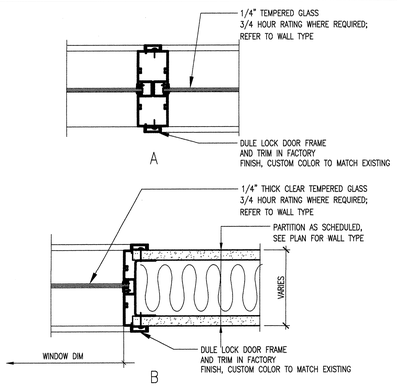

WINDOW JAMB DETAIL
SCALE: 3"=1'-0" 4511-I117 **14**

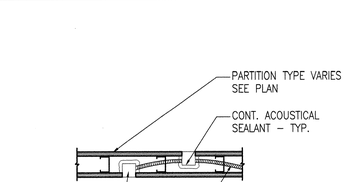

NOTE:
1. PLACE OUTLET BOXES IN SEPARATE STUD SPACES.
2. BACK TO BACK OUTLETS NOT PERMITTED.
3. PLUG ALL UNLISTED KNOCK-OUTS IN OUTLET BOXES WITH KNOCK-OUTS CAPS.
4. PROVIDE BACKING EQUIVALENT TO "LOWRIES" BOX PADS.

OUTLET BOX IN STUD PARTITION
SCALE: N.T.S. 4511-I110 **10**

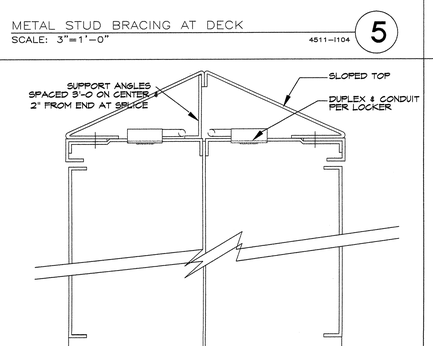

SECTION AT GYM LOCKERS
SCALE: 3"=1'-0" 4511-I435 **6**

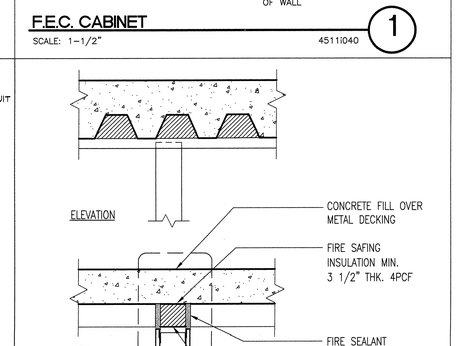

FLOOR ASSEMBLY I.C.B.O. 2331 OR U.L. HW-D-0020 OR EQUAL

FULL HT. FIRE RATED WALL
SCALE: 1 1/2"=1'-0" 4330-I101 **2**

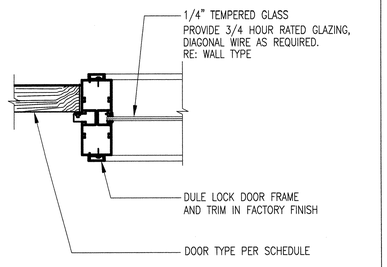

DOOR JAMB @ SIDELITE
SCALE: 3"=1'-0" 4511-I122 **19**

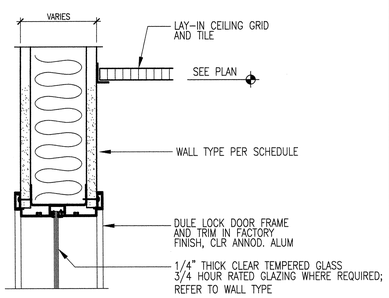

WINDOW HEAD DETAIL
SCALE: 3"=1'-0" 4511-I118 **15**

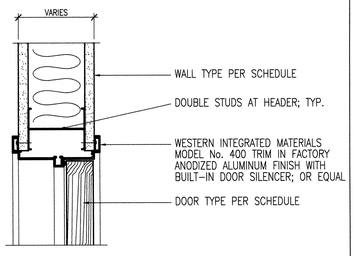

DOOR HEAD
SCALE: 3"=1'-0" 4511-I113 **11**

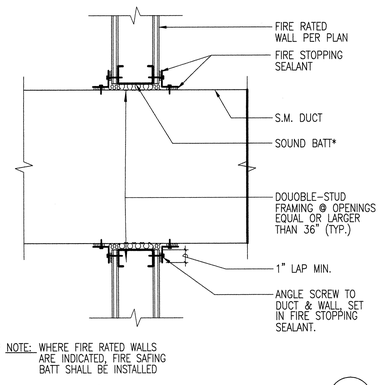

* NOTE: WHERE FIRE RATED WALLS ARE INDICATED, FIRE SAFING BATT SHALL BE INSTALLED

DUCT PENETRATION
SCALE: 3"=1'-0" 4511-I106 **7**

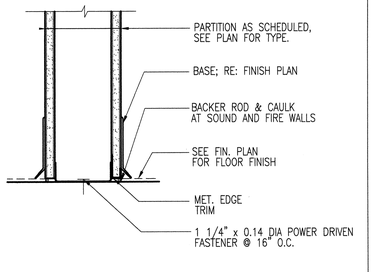

TYPICAL WALL BASE
SCALE: 3"=1'-0" 4511-I102 **3**

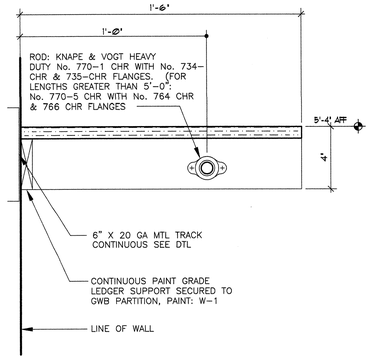

COAT ROD & SHELF
SCALE: 3"=1'-0" 4511-I437 **20**

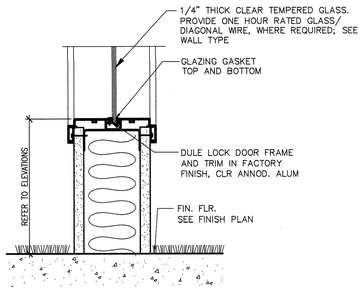

WINDOW SILL DETAIL
SCALE: 3"=1'-0" 4511-I119 **16**

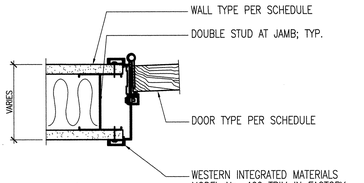

DOOR JAMB
SCALE: 3"=1'-0" 4511-I114 **12**

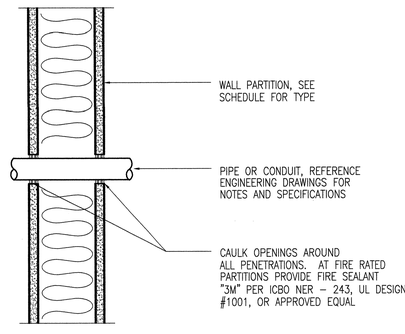

CONDUIT PENETRATION AT WALL
SCALE: 3"=1'-0" 4511-I107 **8**

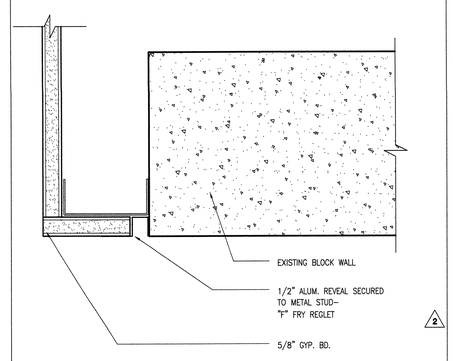

REVEAL AT NON-RATED PARTITIONS
SCALE: 6"=1'-0" 4511-I436 **4**

CARRIER JOHNSON
ARCHITECTURE
INTERIOR DESIGN
PLANNING
GORDON R. CARRIER AIA
MICHAEL C. JOHNSON AIA
WILLIAM C. BOCKEN AIA
DEBORAH P. ELLIOTT IIDA
2600 MICHELSON DRIVE SUITE 400 IRVINE, CALIFORNIA 92612
TEL 949 955-2353 FAX 949 955-2377
1301 THIRD AVENUE SAN DIEGO, CALIFORNIA 92101
TEL 619 239-2353 FAX 619 239-6227

RECORD DOCUMENTS
THESE DOCUMENTS RELEASED BY CARRIER JOHNSON FOR USE AS RECORD DOCUMENTS WILL SHOW THE REPORTED LOCATION OF THE WORK, AND SIGNIFICANT CHANGES MADE DURING CONSTRUCTION AS REPORTED BY THE CONTRACTOR. UNVERIFIED INFORMATION PROVIDED BY THE CONTRACTOR AND OTHER PARTIES WHICH WILL BE ASSUMED RELIABLE. CARRIER JOHNSON CANNOT AND DOES NOT WARRANT THE ACCURACY OF SUCH INFORMATION, AND SHALL NOT BE RESPONSIBLE FOR ANY ERRORS OR OMISSIONS WHICH MAY BE INCORPORATED THEREIN AS A RESULT. FIELD VERIFICATION OF CONDITIONS SHALL ALSO INCLUDE FIELD CONFIRMATION OF EXISTING CONDITIONS.

ONTARIO PD:: HEADQUARTERS

2534 S. ARCHIBALD AVE., ONTARIO, CALIFORNIA 91761

Field Order #13 07.01.03
5 Addendum 5 04.21.2003
3 Addendum 3
2 Addendum 2/Bldg. Dept. Re-Submittal 03.20.2003
Building Dept. Submittal 02.24.2003

ISSUES:
DIRECTORY/FILE NUMBER: 4511-A811
XREF'S DRAWINGS:
PROJECT NUMBER: 4511.00
DRAWN BY: CHECKED BY:
DATE: 2/24/03
SCALE: AS NOTED
TITLE: DETAILS

DRAWING NO: A8.0.2

ALL IDEAS, DESIGN, ARRANGEMENTS AND PLANS INDICATED OR REPRESENTED BY THIS DRAWING ARE OWNED BY, AND THE PROPERTY OF CARRIER JOHNSON AND WERE CREATED, EVOLVED AND DEVELOPED FOR USE ON, AND IN CONNECTION WITH THIS PROJECT. NONE OF SUCH IDEAS, DESIGN, ARRANGEMENTS, OR PLANS SHALL BE USED BY, OR DISCLOSED TO ANY PERSON, FIRM, OR CORPORATION FOR ANY PURPOSE WHATSOEVER WITHOUT THE WRITTEN PERMISSION OF CARRIER JOHNSON. FILING THESE DRAWINGS OR SPECIFICATIONS WITH ANY PUBLIC AGENCY IS NOT A PUBLICATION OF SAME. NO COPYING, REPRODUCTION OR USE THEREOF IS PERMISSIBLE WITHOUT THE CONSENT OF CARRIER JOHNSON.

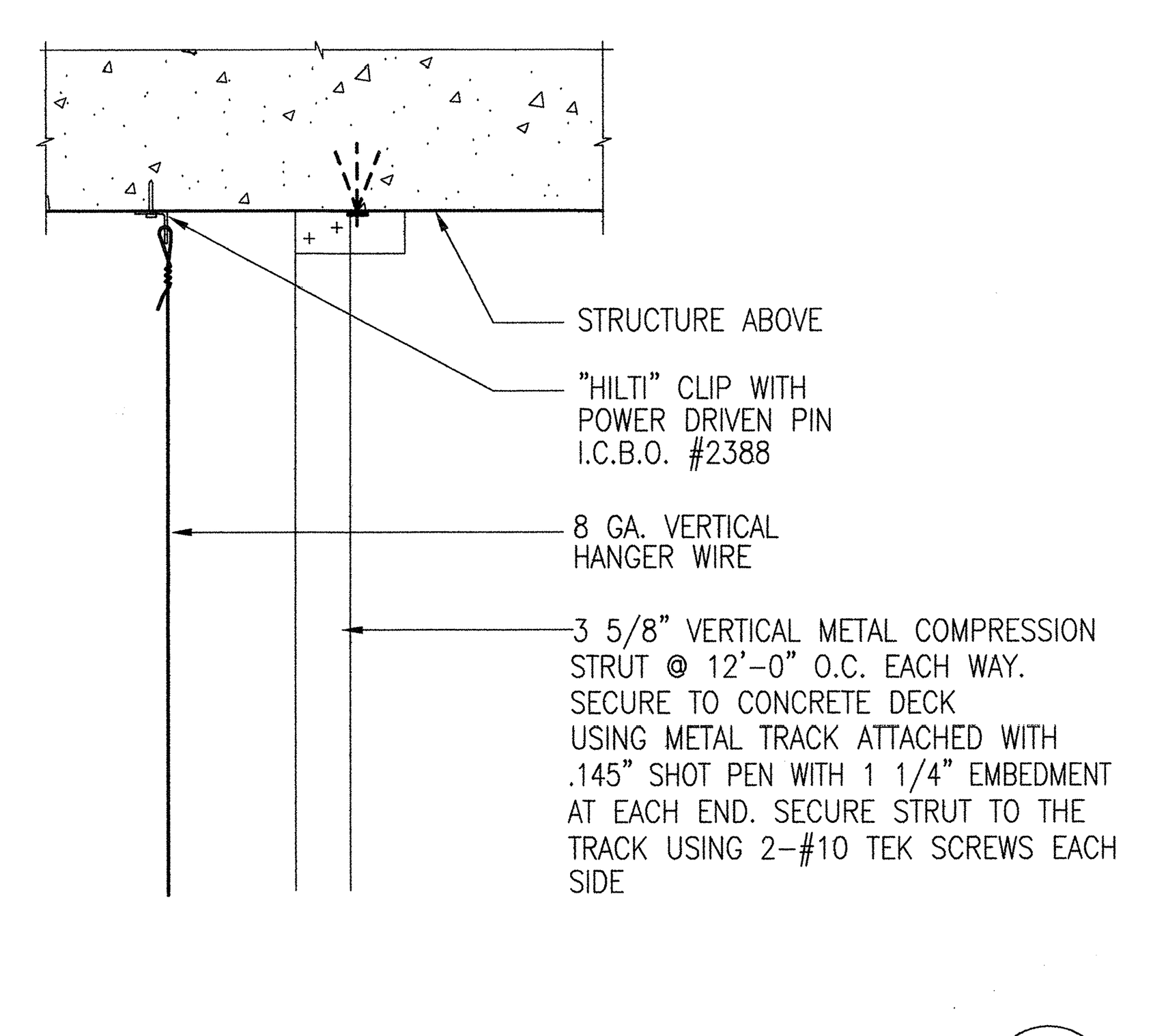

TYP. VERT. HANGER WIRE ATTACHMENT — 17
SCALE: 3"=1'-0" 4511-i324

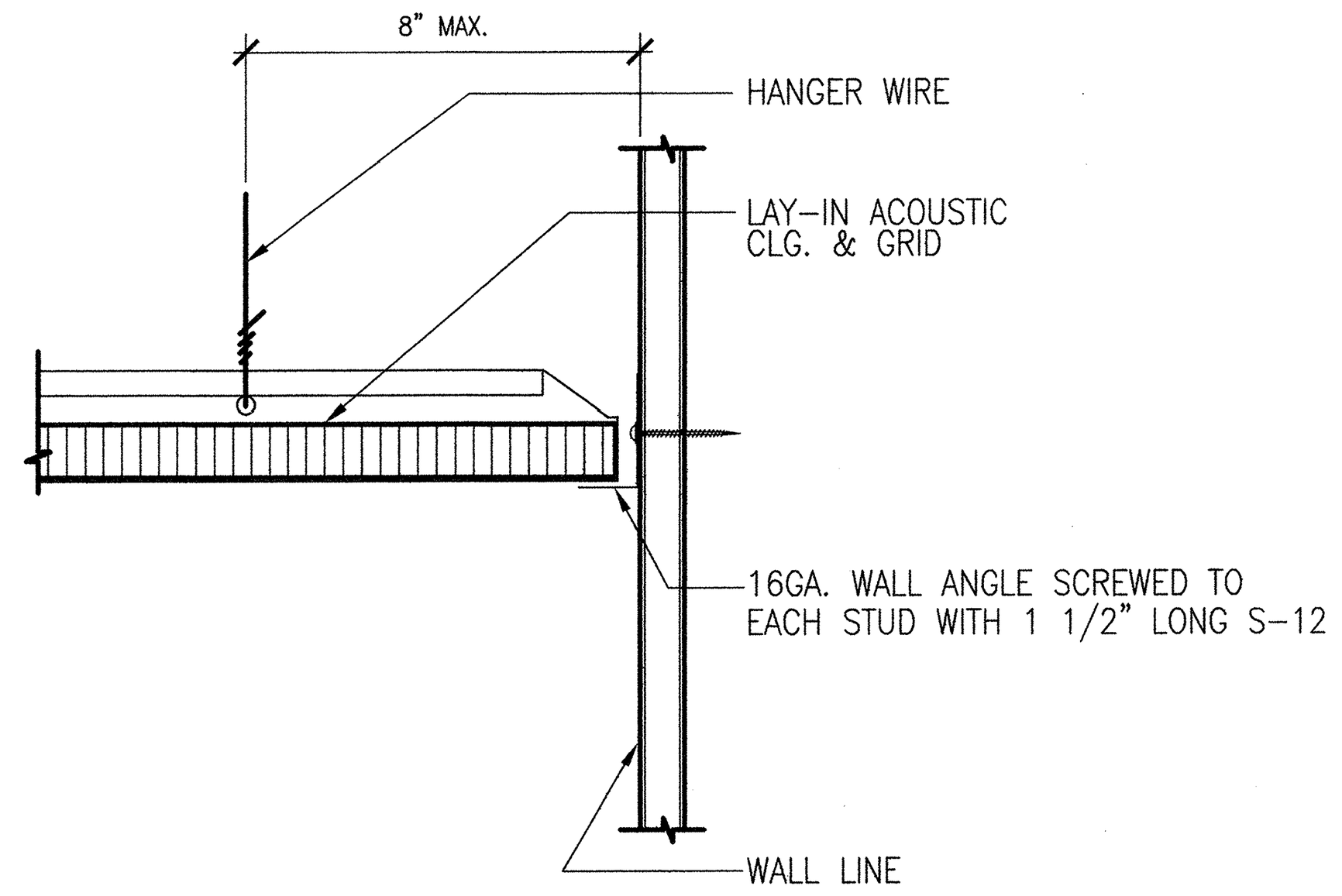

SUSPENDED CEILING — 13
SCALE: 3"=1'-0" 4511-i320

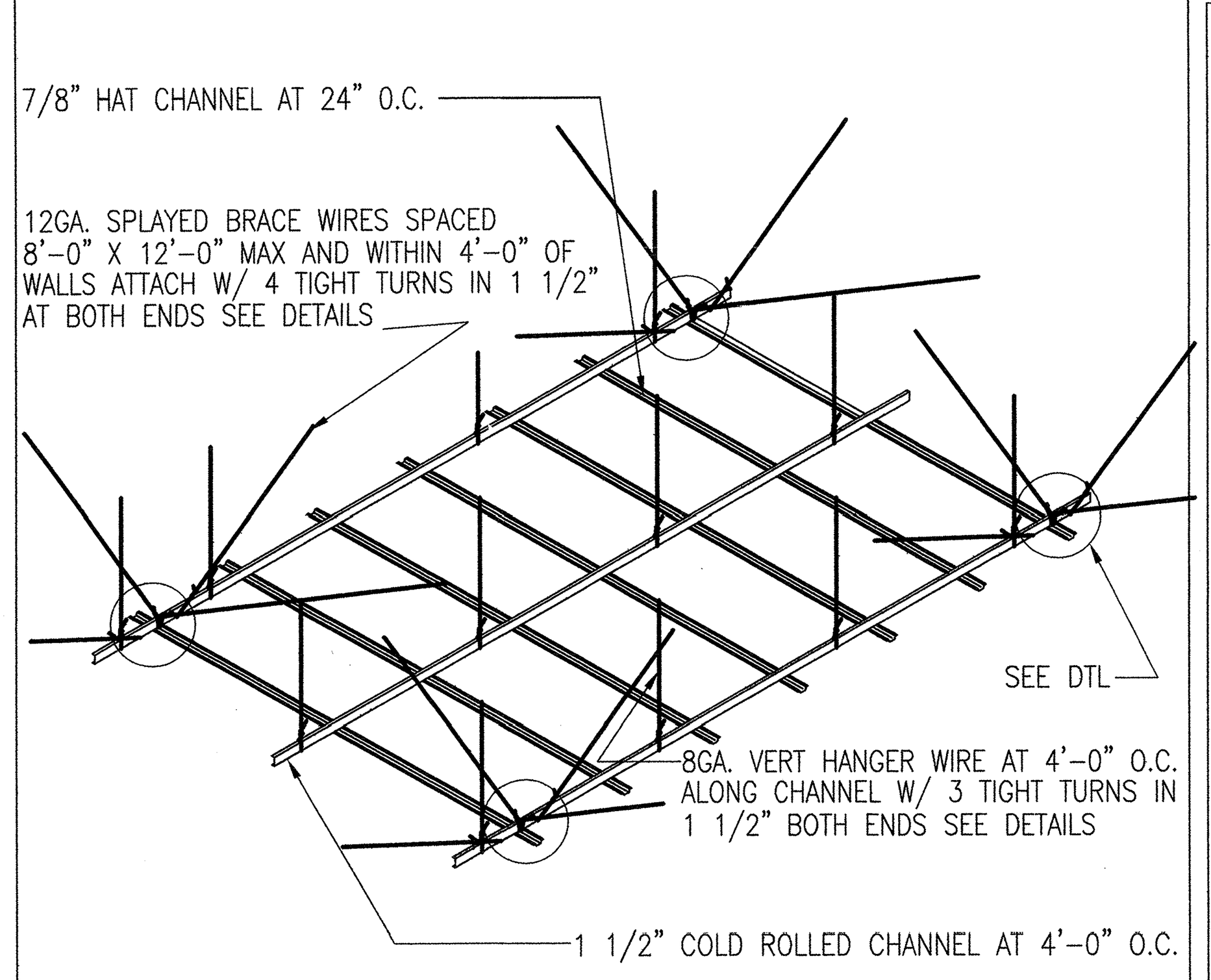

TYPICAL SUSPENDED GYP. BD. CEILING — 9
SCALE: N.T.S. 4511-i316

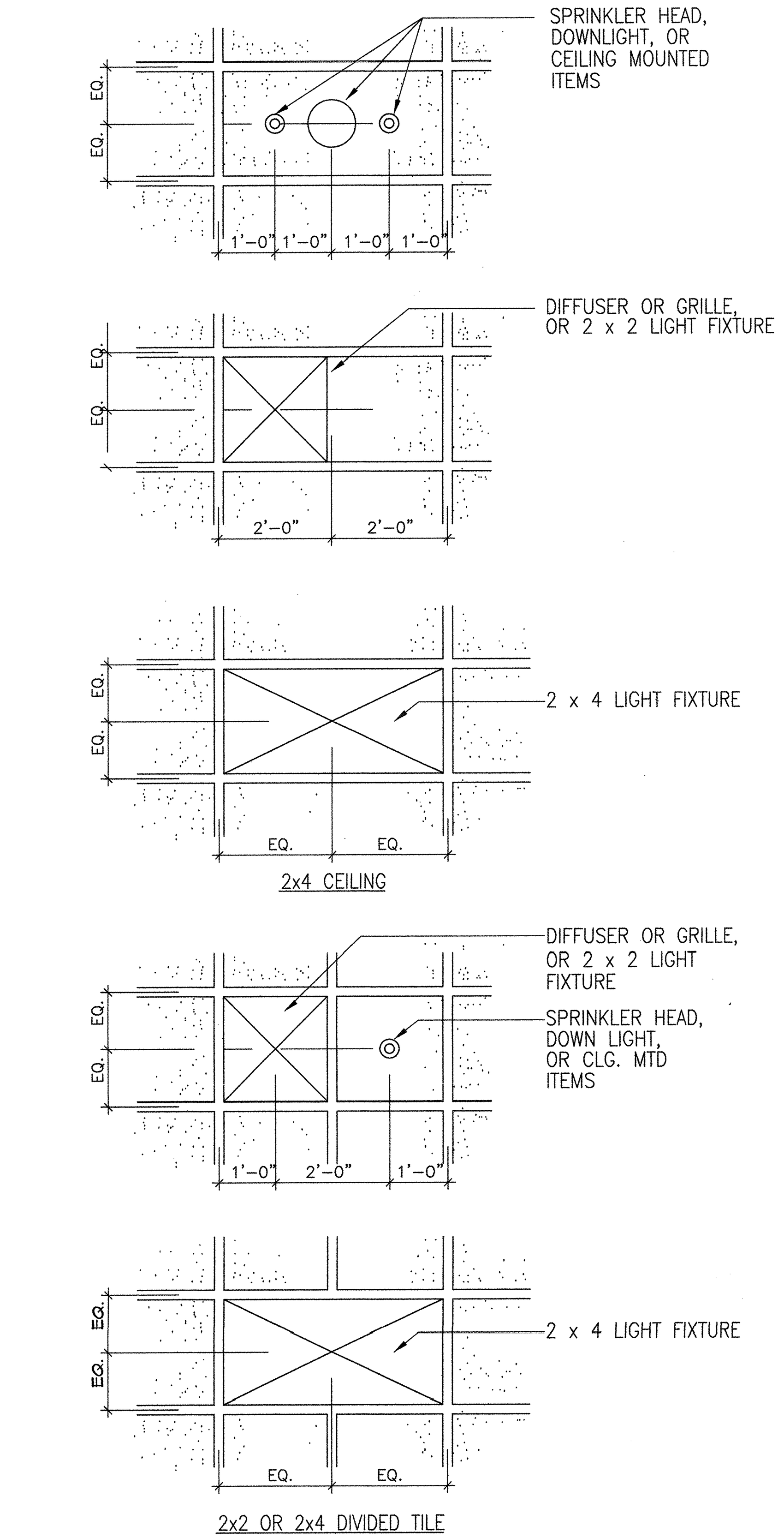

TYPICAL CEILING LAYOUTS — 6
SCALE: N.T.S. 4511-i313

CEILING NOTES (FOR CEILINGS LESS THAN 4psf EXCEPT AS NOTED FOR CEILINGS BETWEEN 4psf AND 7psf):

A. PROVIDE AND INSTALL ACOUSTIC CEILINGS AS INDICATED ON THE PLANS WITH ALL REQUIRED ACCESSORIES AND HARDWARE.

1. PATTERN: (ACOUSTICAL TILE) UNLESS OTHERWISE INDICATED OR SPECIFIED, INSTALL CEILINGS IN A REGULAR PATTERN WITHOUT BORDER, JOINT LINES PARALLEL TO WALL. INSTALL ACOUSTICAL UNITS SYMMETRICALLY ABOUT CENTERLINES OF EACH ROOM OR SPACE, AVOIDING NARROW UNITS AT WALLS.
2. FRAMING FOR LIGHTING AND MECHANICAL FIXTURES – OBTAIN NECESSARY DATA FROM OTHER TRADES AND PROVIDE ADDITIONAL HANGER WIRE AND / OR FRAMING IN SUSPENDED GRIDS AS REQUIRED TO SUPPORT LIGHTING AND MECHANICAL FIXTURES.

B. CEILING MATERIALS:

1. LAY-IN ACOUSTIC TILE CEILING TILES SHALL BE VINYL CEILING TILE IN ROOMS –, –, – – AND –. ALL OTHER ROOMS IN THE SUITE WILL HAVE ARMESTRONG, SECONDLOOK II CEILING TILE.
2. THE ACOUSTIC AND GYPSUM TILE CEILING SUSPENSION SHALL BE 'DONN' MEDIUM DUTY CEILING GRID AND THE DRYWALL HARD LID IS 1 1/2" COLD ROLLED STEEL CHANNELS AND 7/8" HAT CHANNELS WITH TAPED AND FLOATED DRYWALL UNLESS SHOWN OTHERWISE.

C. INSTALLATION: (REQUIREMENTS FOR THE DESIGN AND INSTALLATION OF SUSPENDED ACOUSTICAL CEILING SYSTEMS ARE CONTAINED IN THE 'UNIFORM BUILDING CODE STANDARDS' NUMBER 47-18.)

1. 12GA (MINIMUM AT 4psf OR LIGHTER CEILINGS) AND 8GA (MINIMUM AT CEILINGS MORE THAN 4psf BUT LIGHTER THAN 7psf) CEILING HANGER WIRES MAY BE USED FOR UP TO AND INCLUDING 4'-0"x 4'-0" GRID SPACING ALONG THE MAIN RUNNERS / COLD ROLLED STEEL CHANNELS. SPLICES WILL NOT BE PERMITTED IN ANY HANGER WIRES.
2. 12GA (MINIMUM AT 4psf OR LIGHTER CEILINGS) AND 8GA (MINIMUM AT CEILINGS MORE THAN 4psf BUT LIGHTER THAN 7psf) WITHIN 8" OF THE ENDS OF ALL MAIN AND CROSS RUNNERS OR 1/4 OF THE LENGTH FROM THE END OF THE TEE, WHICHEVER IS LEAST AT THE PERIMETER OF THE CEILING AREA.
3. PROVIDE TRAPEZE OR OTHER SUPPLEMENTARY SUPPORT MEMBERS AT OBSTRUCTIONS TO MAINTAIN HANGER SPACING. PROVIDE ADDITIONAL HANGERS, STRUTS, OR BRACES AS REQUIRED AT ALL CEILING BREAKS, SOFFITS, OR DISCONTINUOUS AREAS. HANGER WIRES THAT ARE MORE THAN 1 IN 6 OUT OF PLUMB ARE TO HAVE COUNTER-SLOPING WIRES.
4. SUPPORT MAIN RUNNERS AND CROSS MEMBERS ALONG FULL HEIGHT PARTITION AT 8'-0" O.C.
5. CEILING GRID MEMBERS MAY NOT BE ATTACHED TO MORE THAN (2) ADJACENT WALLS. THE CEILING GRID MEMBERS SHOULD BE AT LEAST 1/2" CLEAR OF AN ADJACENT WALL.
6. AT THE PERIMETER OF THE CEILING AREA WHERE MAIN OR CROSS RUNNERS ARE NOT CONNECTED TO THE ADJACENT WALL, PROVIDE INTERCONNECTION BETWEEN THE RUNNERS AT THE FREE END TO PREVENT LATERAL SPREADING. A METAL STRUT OR A 16 GA WIRE WITH A POSITIVE MECHANICAL CONNECTION TO THE RUNNER MAY BE USED. WHERE THE PERPENDICULAR DISTANCE FROM THE FIRST PARALLEL RUNNER IS 12" OR LESS, THIS INTERLOCK IS NOT REQUIRED.
7. PROVIDE SETS OF (4) 12GA SPLAYED BRACING ORIENTED 90 DEGREES FROM EACH OTHER AT THE FOLLOWING SPACING:
   A. PLACE SETS OF SPLAY WIRES AT A SPACING NOT MORE THAN 12'-0" ON CENTER AND NOT MORE THAN 6'-0" FROM ALL PERIMETER WALLS.
   B. PROVIDE SPLAY WIRES AT THE EDGE OF ALL VERTICAL CEILING OFFSETS.
   C. THE SLOPE OF THESE WIRES SHOULD NOT EXCEED 45 DEGREES FROM THE PLANE OF THE CEILING AND SHOULD BE TAUT WITHOUT CAUSING THE CEILING TO LIFT. SPLICES IN BRACING WIRES ARE NOT PERMITTED.
8. VERTICAL COMPRESSION STRUTS SHALL BE INSTALLED (FASTENED WITH #6 DRYWALL SCREWS TO THE MAIN RUNNERS) AT EACH CROSS RUNNER INTERSECTION WHERE LATERAL SUPPORT WIRES ARE INSTALLED. FOR COMPRESSION STRUT SIZEING REFER BELOW :
   IF DISTANCE (X) BETWEEN CEILING GRID AND SLAB / ROOF DECK ABOVE IS:
   $X \le 8'-0"$ – ONE 3 5/8" (25 GA) MTL STUD
   IF $X > 8'-0"$ BUT $\le 10'-0"$ – TWO 1 5/8" (25 GA) MTL STUDS
   IF $X > 10'-0"$ BUT $\le 15'-0"$ – TWO 2 1/2" (25 GA) MTL STUDS
   IF $X > 15'-0"$ BUT $\le 20'-0"$ – TWO 3 5/8" (25 GA) MTL STUDS
   METAL STUDS MUST BE ORIENTED AS SHOWN AND CONNECTED EVERY 12" ALONG THEIR LENGTH.

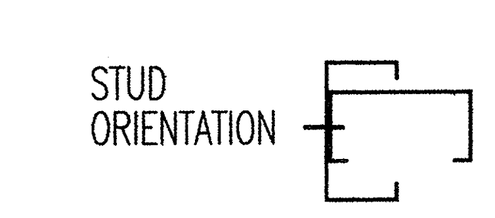

9. FASTEN HANGER WIRES WITH NOT LESS THAN (3) TIGHT TURNS WITHIN A DISTANCE OF 1 1/2". FASTEN SPLAY WIRES WITH (4) TIGHT TURNS WITHIN A DISTANCE OF 1-1/2". HANGER OR BRACING WIRE ANCHORS TO THE STRUCTURE SHOULD BE INSTALLED IN SUCH A MANNER THAT THE DIRECTION OF THE WIRE ALIGNS AS CLOSELY AS POSSIBLE WITH THE DIRECTION OF THE FORCES ACTING ON THE WIRES.
10. LATERAL FORCE-BRACING MEMBERS FOR SUSPENDED CEILINGS SHALL BE A MINIMUM OF AT LEAST 6" FROM ALL HORIZONTAL PIPING OR DUCTWORK NOT PROVIDED WITH BRACING RESTAINTS FOR HORIZONTAL FORCES. BRACING WIRES SHALL BE ATTACHED TO THE GRID AND STRUCTURE AND SHALL SUPPORT A DESIGN LOAD THE GREATER OF 200 lbs. OR THE ACTUAL LOAD, WITH A SAFETY FACTOR OF 2.
11. SET ALL LIGHT FIXTURS AND DIFUSERS IN TO THE CEILING GRID RUNNERS TO RESIST A HORIZONTAL FORCE EQUAL TO THE WEIGHT OF THE FIXTURE. LIGHTING FIXTURES AND MECH DIFUSERS WEIGHING LESS THAN 56 POUNDS MAY BE SUPPORTED DIRECTLY ON THE CEILING GRID WITH A MIN. OF (2) 12 GA HANGER WIRES (SLACK) LOCATED AT OPPOSITE CORNERS OF THE FIXTURE AND ATTACHED TO THE STRUCTURE ABOVE.
12. SUPPORT PENDANT MOUNTED LIGHT FIXTURES DIRECTLY FROM THE STRUCTURE ABOVE WITH HANGER WIRES OR CABLES CAPABLE OF SUPPORTING (4) TIMES THE WEIGHT OF THE FIXTURE.

CEILING NOTES — 3
SCALE: N.T.S. 4511-i311

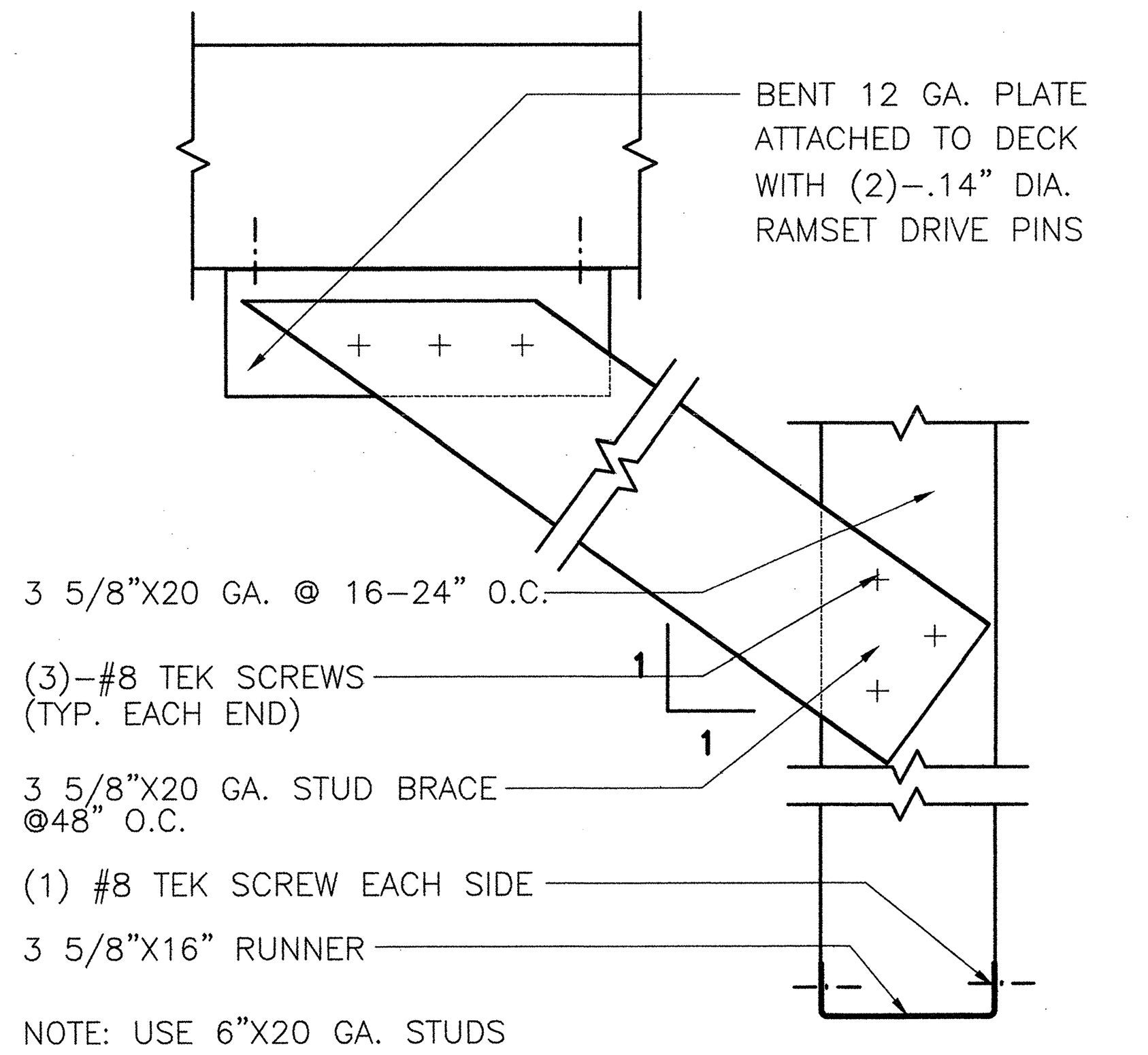

NOTE: USE 6"X20 GA. STUDS FOR 6" WALL TYPES

BRACING DETAIL — 18
SCALE: 3" = 1'-0" 4511-i326

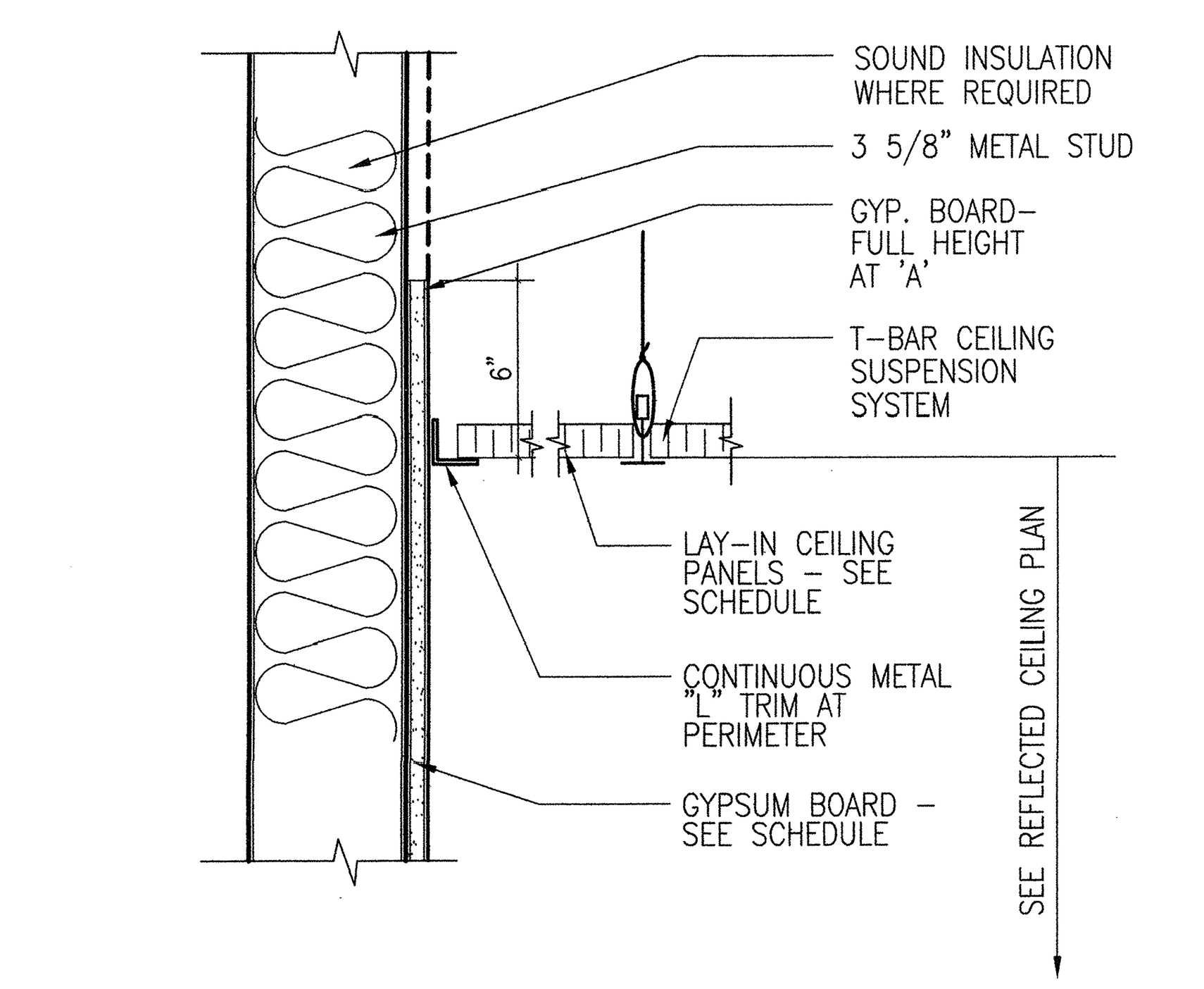

CEILING DETAIL — 14
SCALE: 3" = 1'-0" 4511-i324

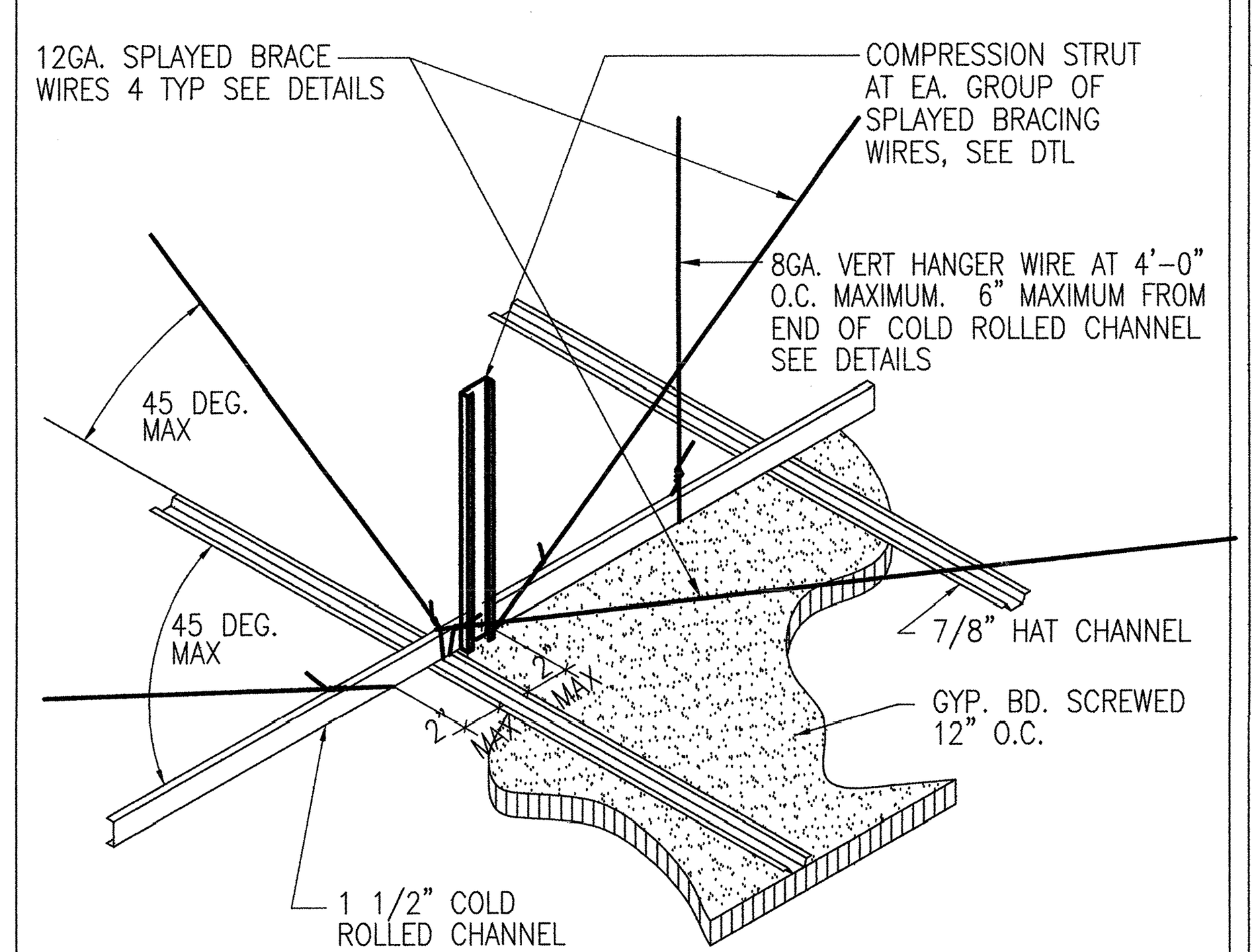

SUSPENDED GYP. BD. CEILING — 10
SCALE: N.T.S. 4511-i318

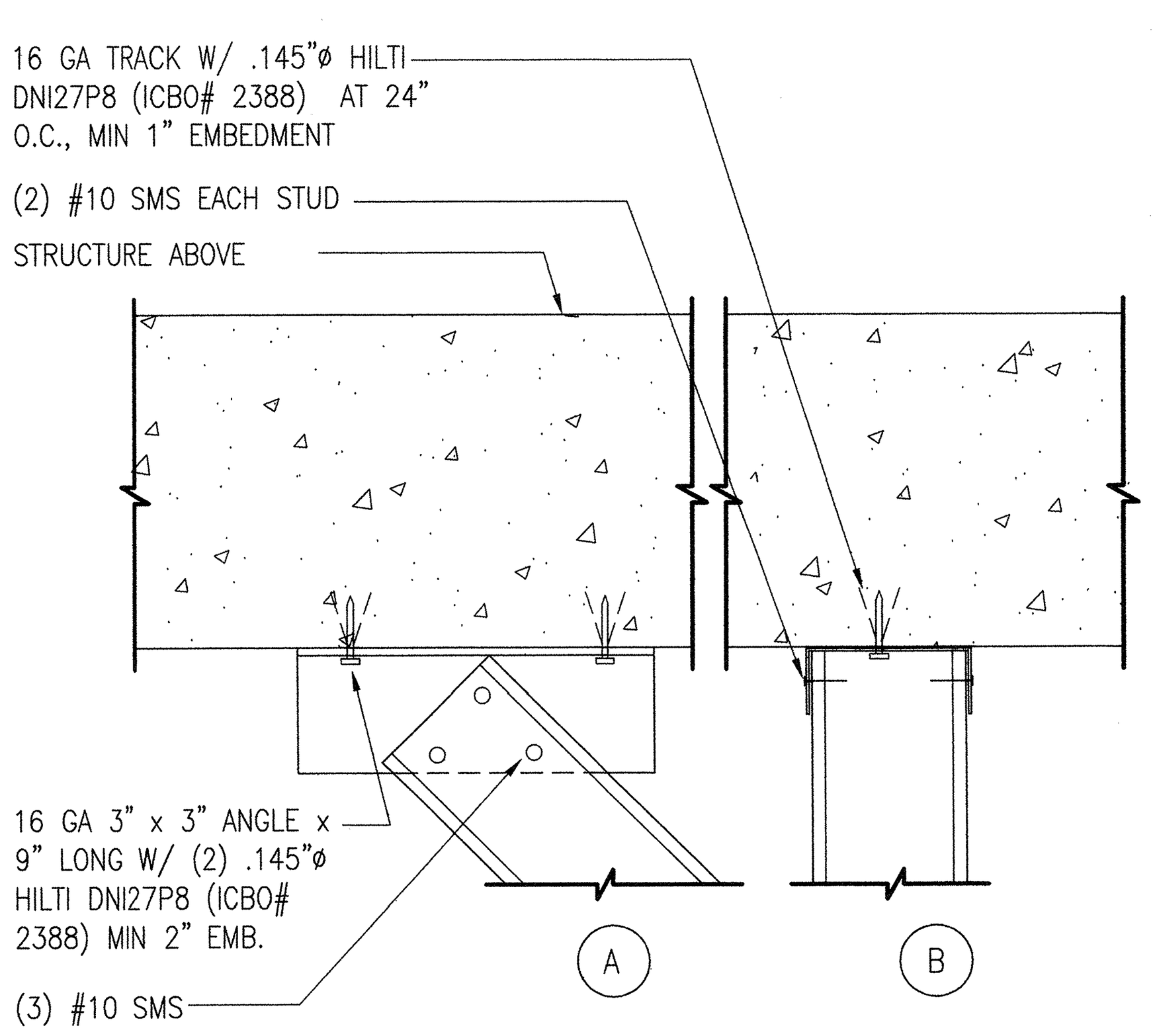

SUSPENDED STEM WALL CONNECTION — 19
SCALE: 3" = 1'-0" 4511-i325

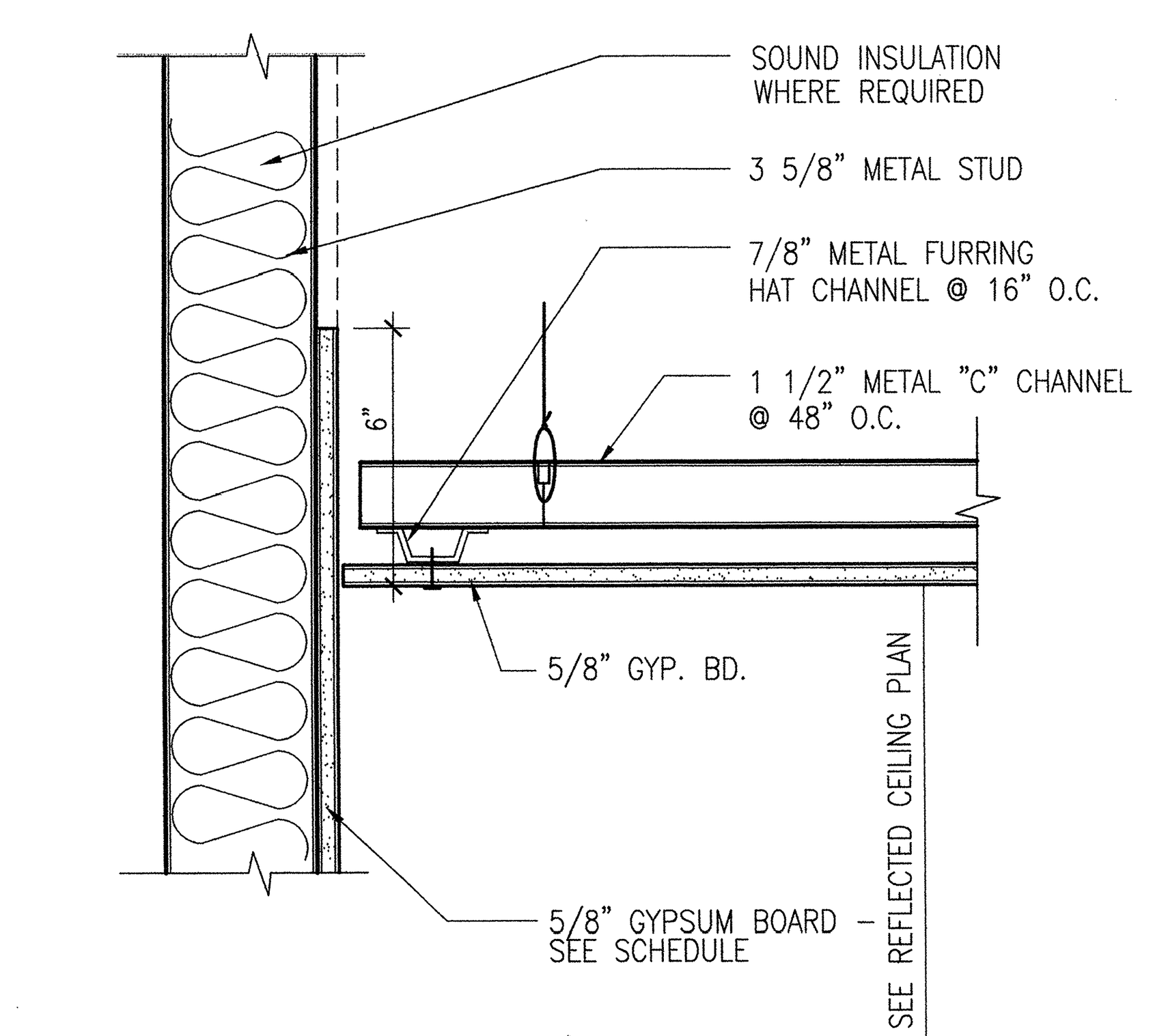

CEILING DETAIL — 15
SCALE: 3" = 1'-0" 4511-i322

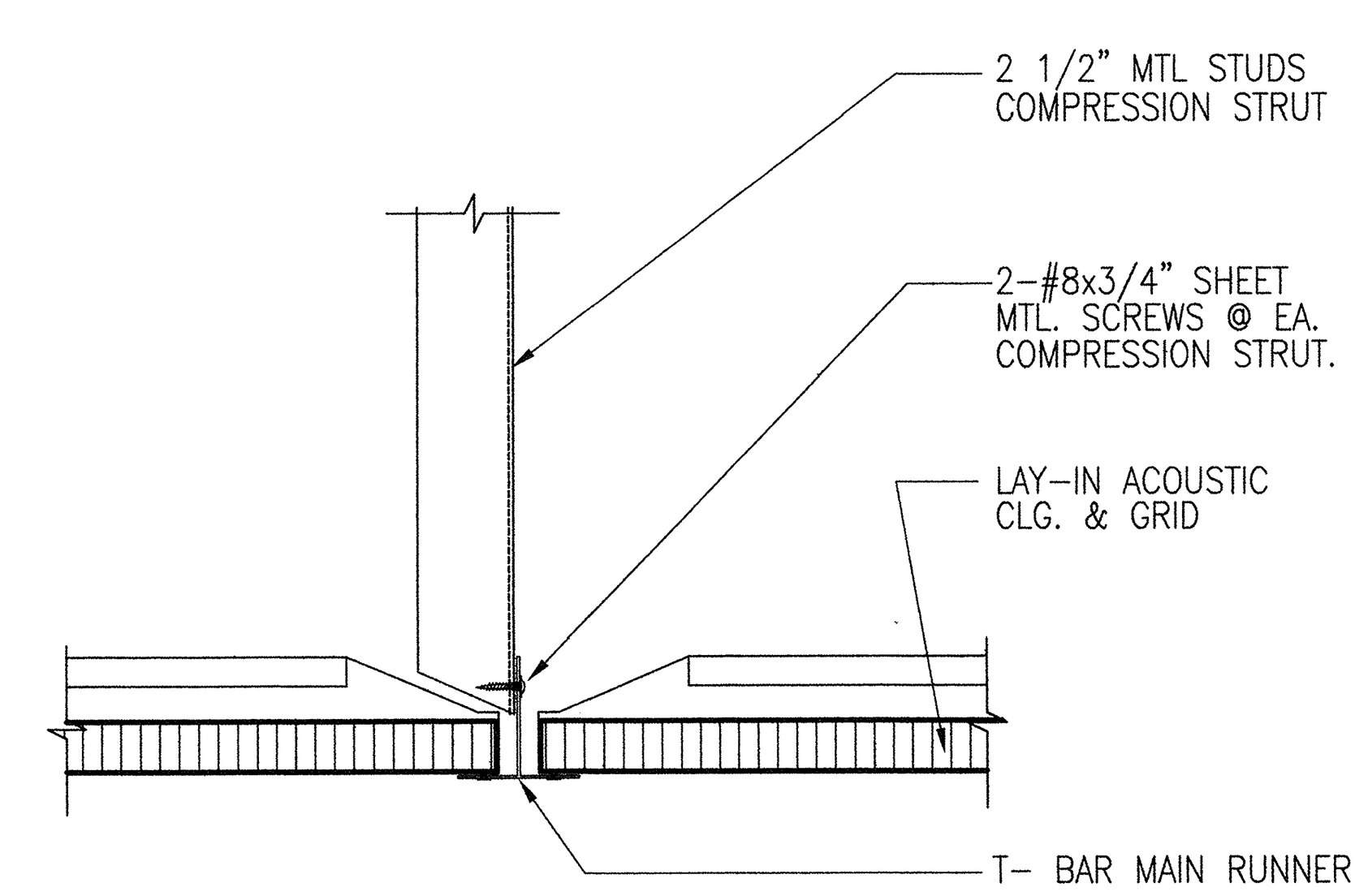

TYPICAL COMPRESSION STRUT — 11
SCALE: 3"=1'-0" 4511-i318

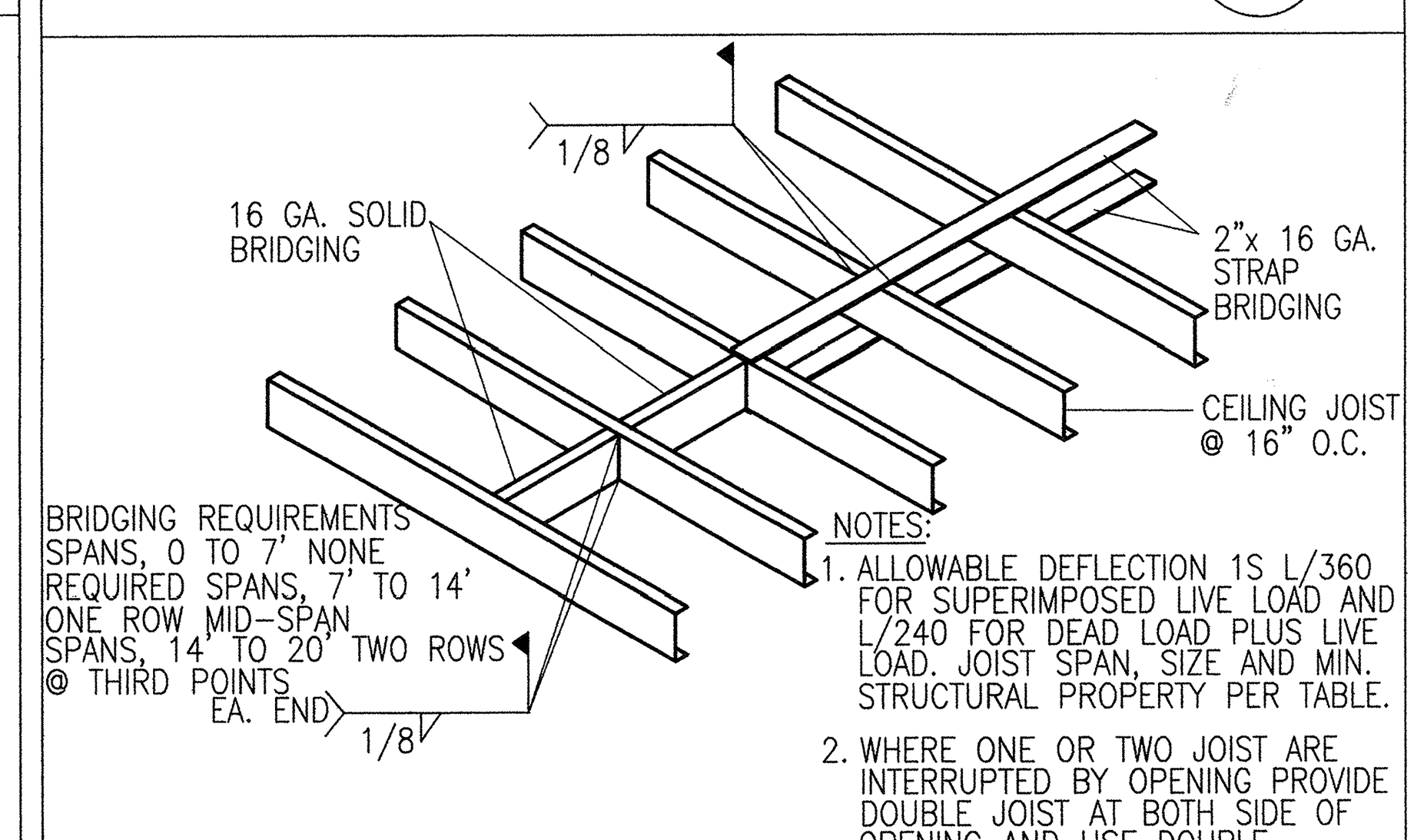

NOTES:
1. ALLOWABLE DEFLECTION 1S L/360 FOR SUPERIMPOSED LIVE LOAD AND L/240 FOR DEAD LOAD PLUS LIVE LOAD. JOIST SPAN, SIZE AND MIN. STRUCTURAL PROPERTY PER TABLE.
2. WHERE ONE OR TWO JOIST ARE INTERRUPTED BY OPENING PROVIDE DOUBLE JOIST AT BOTH SIDE OF OPENING AND USE DOUBLE HEAD SILLS.
3. WEB OPENING TO BE GREATER THAN 1 1/2" D FROM BEARING POINT (TYPICAL)
4. CEILING JOIST MUST BE LOCATED OVER THE WALL STUD.
5. ATTACH 5/8" TYPE 'X' DRYWALL TO EACH SIDE OF THE CEILING JOIST AT AREAS THAT REQUIRE ONE HOUR TUNNEL TYPE CONSTRUCTION

SPAN	JOIST SIZE	Sx MIN.	Ix MIN.
8' OR LESS	400 CC 20	0.29	0.60
10' OR LESS	400 CC 18	0.37	0.76
12' OR LESS	600 CC 20	0.51	1.59
14' OR LESS	600 CC 20	0.51	1.59
16' OR LESS	600 CC 18	0.66	2.02
18' OR LESS	600 CC 16	0.80	2.51

STEEL DRYWALL CEILING FRAME — 7
SCALE: N.T.S. 4511-i312

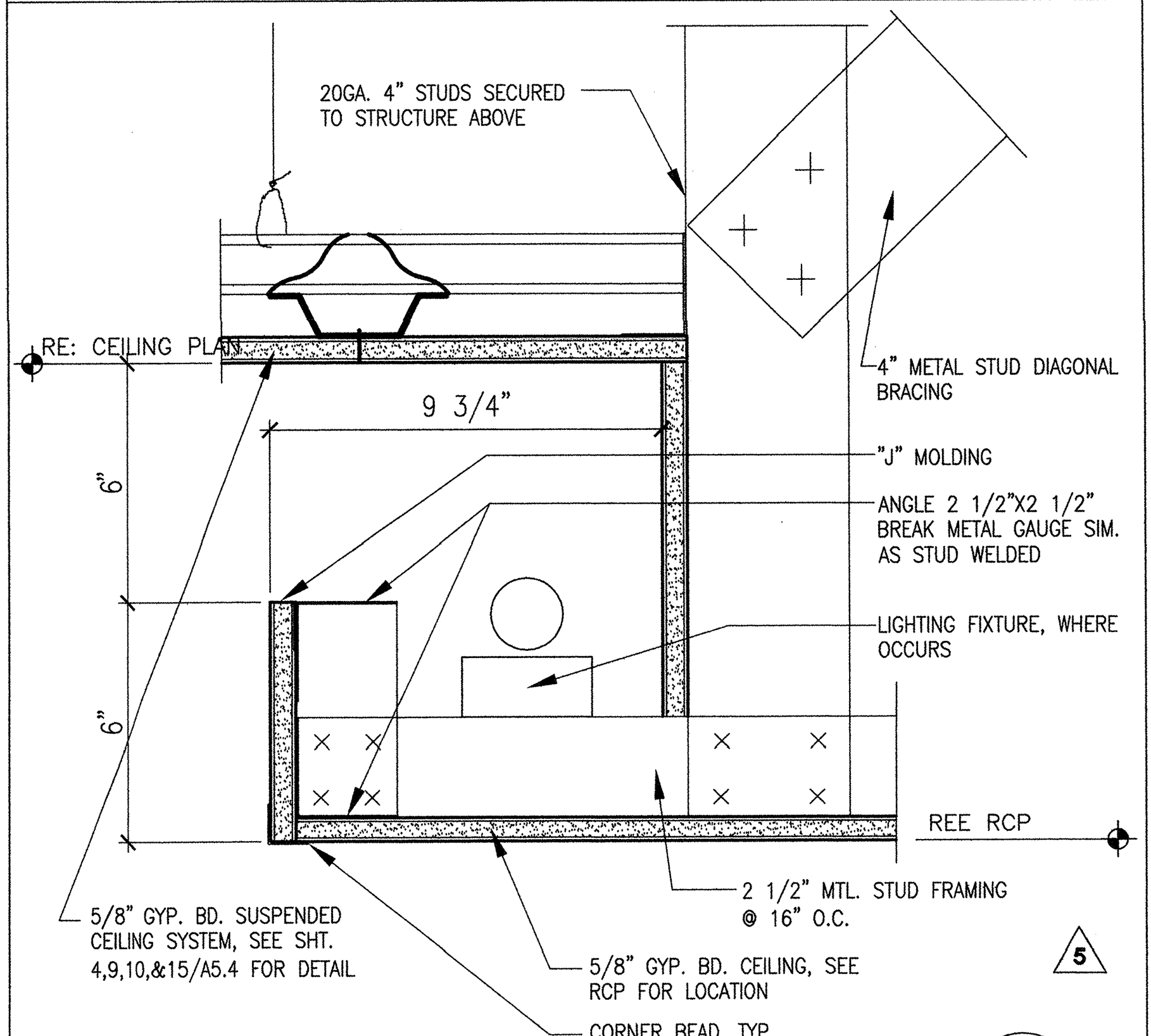

CEILING DETAIL — 20
SCALE: 3"=1'-0" 4511-i330

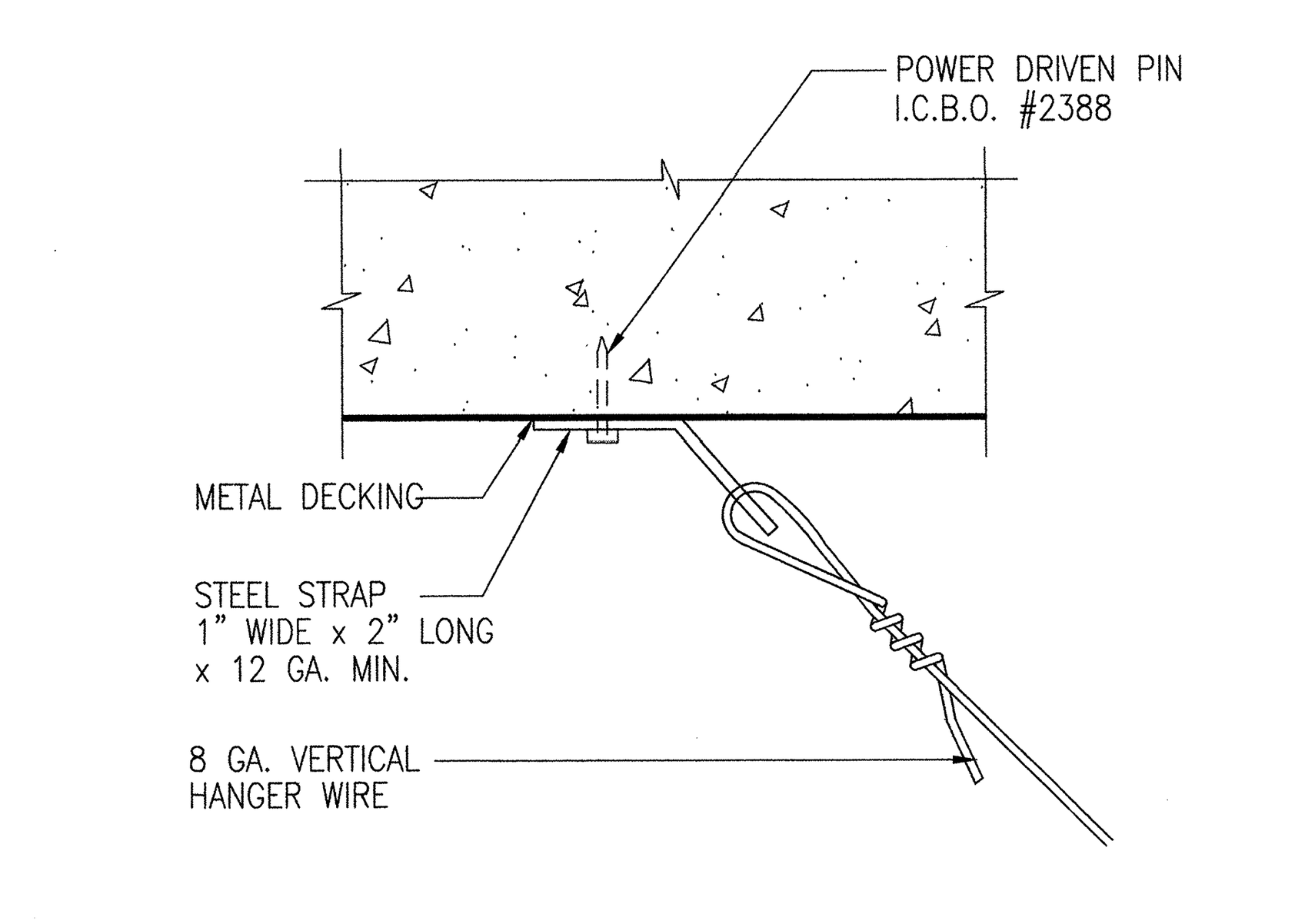

TYPICAL VERT. HANGER WIRE ATTACHMENT — 16
SCALE: FULL 4511-i323

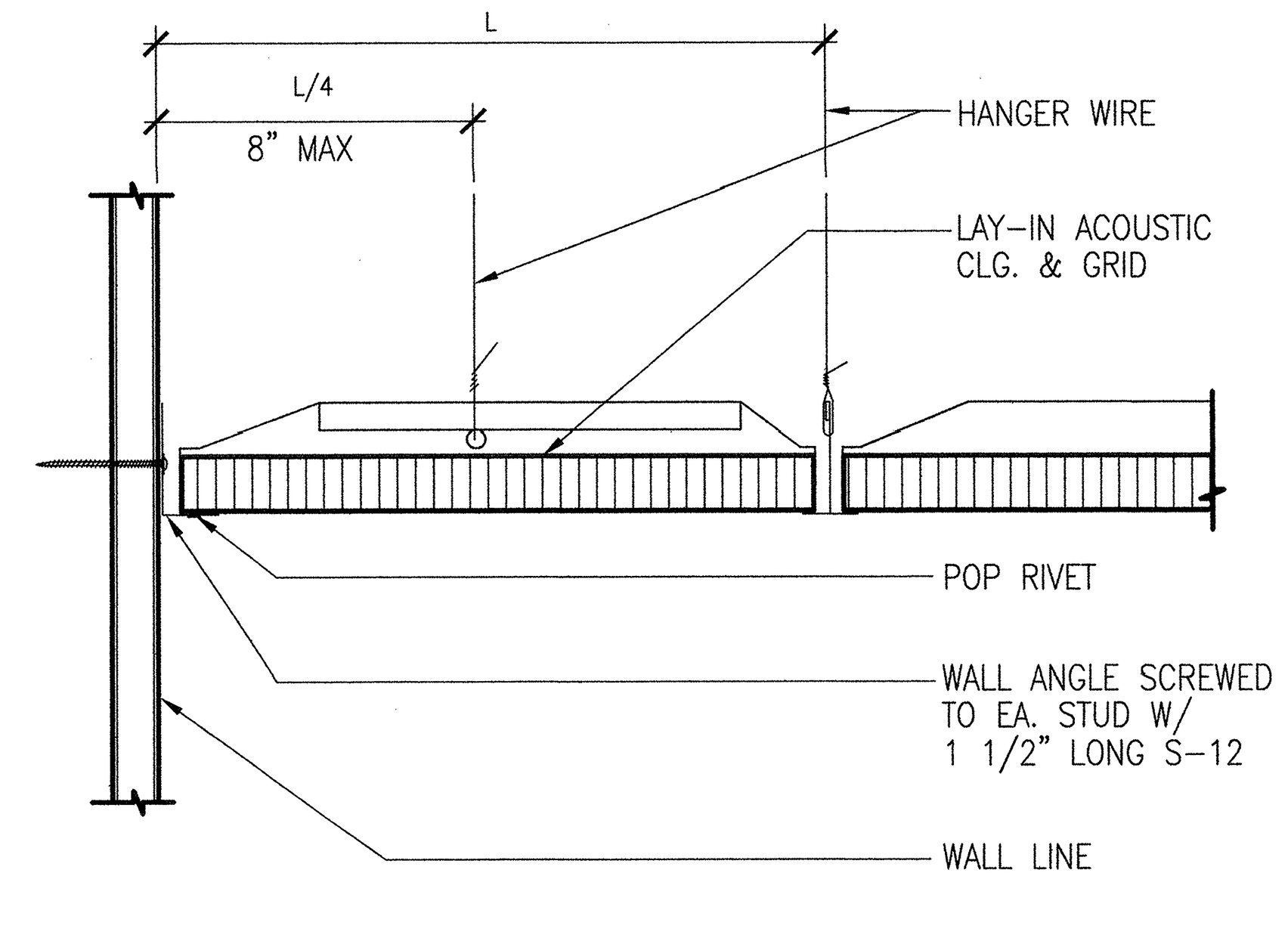

SUSPENDED CEILING (ATTACH TO WALL) — 12
SCALE: 3"=1'-0" 4511-i319

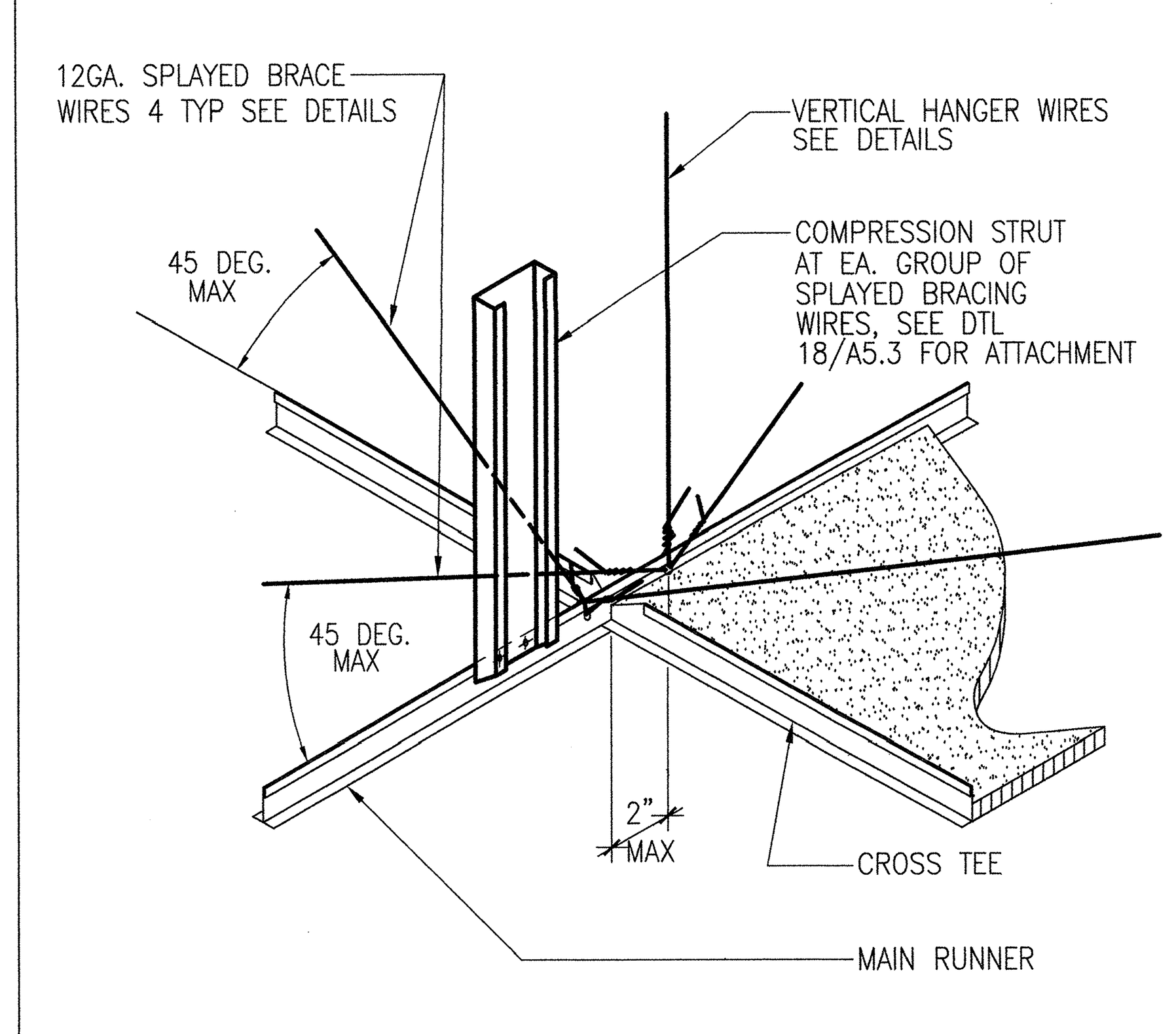

SUSPENDED CEILING — 8
SCALE: N.T.S. 4511-i315

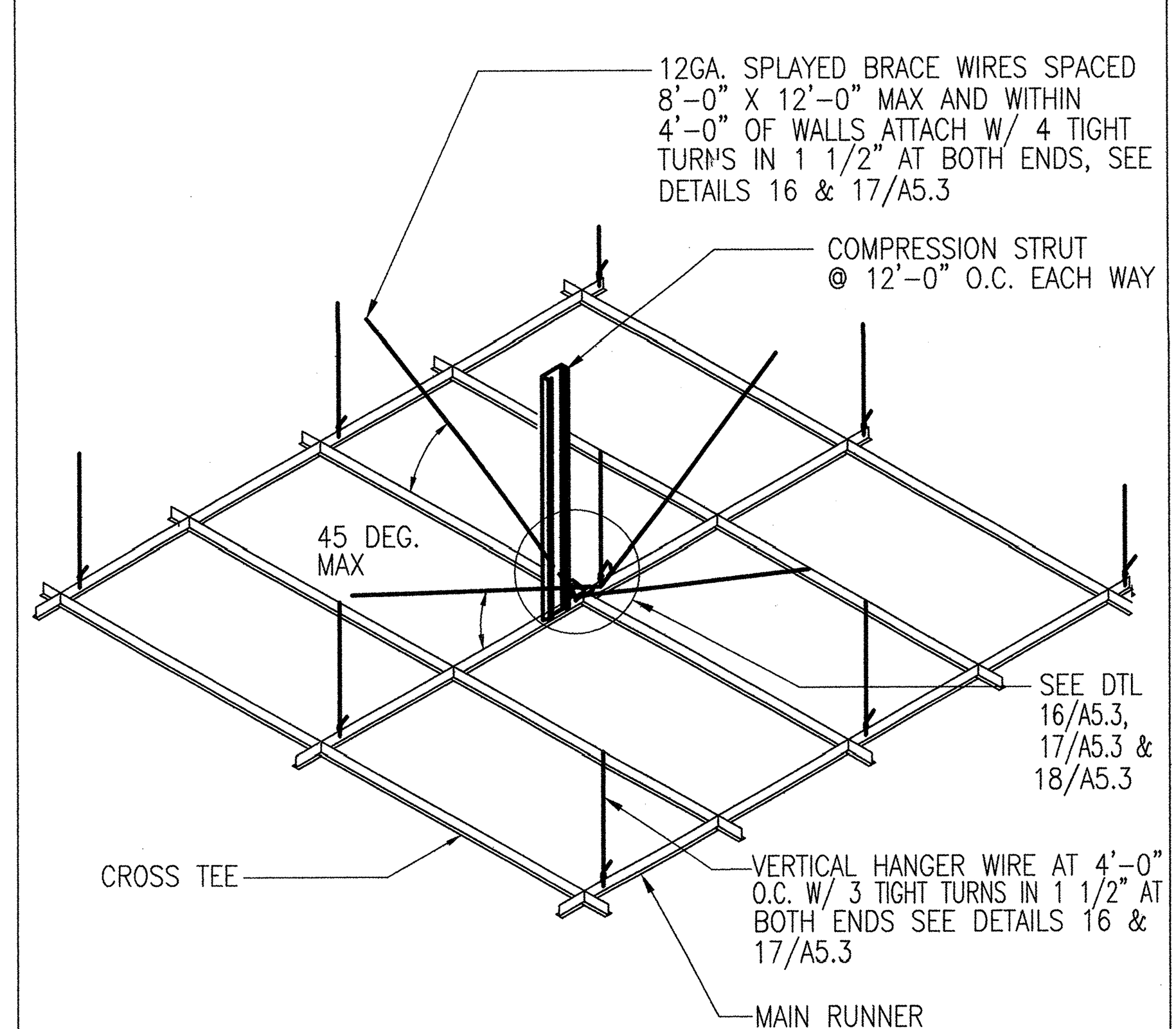

TYPICAL SUSPENDED CEILING — 4
SCALE: N.T.S. 4511-i314

ARCHITECTURE
INTERIOR DESIGN
PLANNING

CARRIER JOHNSON

GORDON R. CARRIER AIA
MICHAEL C. JOHNSON AIA

WILLIAM C. BOCKEN AIA
DEBORAH P. ELLIOTT IIDA

2600 MICHELSON DRIVE
SUITE 400
IRVINE, CALIFORNIA
92612

TEL 949 955-2353
FAX 949 955-2377

1301 THIRD AVENUE
SAN DIEGO, CALIFORNIA
92101

TEL 619 239-2353
FAX 619 239-6227

RECORD DOCUMENTS
THESE DOCUMENTS RELEASED BY CARRIER JOHNSON FOR USE AS RECORD DOCUMENTS WILL SHOW THE REPORTED LOCATION OF THE WORK AND SIGNIFICANT CHANGES MADE DURING THE CONSTRUCTION PROCESS, AND ARE BASED ON UNVERIFIED INFORMATION PROVIDED BY THE CONTRACTOR AND OTHER PARTIES WHICH WILL BE ASSUMED RELIABLE. CARRIER JOHNSON CANNOT AND DOES NOT WARRANT THE ACCURACY AND/OR COMPLETENESS OF THIS INFORMATION AND SHALL NOT BE RESPONSIBLE FOR ANY ERRORS OR OMISSIONS WHICH MAY BE INCORPORATED THEREIN AS A RESULT. FUTURE CONSTRUCTION PLANNING MUST INCLUDE FIELD CONFIRMATION OF EXISTING CONDITIONS.

ONTARIO PD:: HEADQUARTERS
2534 S. ARCHIBALD AVE., ONTARIO, CALIFORNIA 91761

F13 Field Order #13 07.01.03
5 Addendum 5 04.21.2003
3 Addendum 3
2 Addendum 2/Bldg. Dept. Re-Submittal 03.20.2003
Building Dept. Submittal 02.24.2003
ISSUES:

DIRECTORY/FILE NUMBER: 4511-A803
XREF'S DRAWINGS:
PROJECT NUMBER: 4511.00
DRAWN BY: CHECKED BY:
DATE: 2/24/03
SCALE: AS NOTED
TITLE: DETAILS

DRAWING NO: A8.0.3

ALL IDEAS, DESIGN, ARRANGEMENTS AND PLANS INDICATED OR REPRESENTED BY THIS DRAWING ARE OWNED BY AND THE PROPERTY OF CARRIER JOHNSON, AND WERE CREATED, EVOLVED AND DEVELOPED FOR USE ON, AND IN CONNECTION WITH THE SPECIFIED PROJECT. NONE OF SUCH IDEAS, DESIGNS, ARRANGEMENTS OR PLANS SHALL BE USED BY OR DISCLOSED TO ANY PERSON, FIRM OR CORPORATION FOR ANY PURPOSE WHATSOEVER, WITHOUT THE PRIOR WRITTEN PERMISSION OF CARRIER JOHNSON. FILING THESE DRAWINGS OR SPECIFICATIONS WITH ANY PUBLIC AGENCY IS NOT A PUBLICATION OF SAME. NO COPYING, REPRODUCTION OR USE THEREOF IS PERMISSIBLE WITHOUT THE CONSENT OF CARRIER JOHNSON.

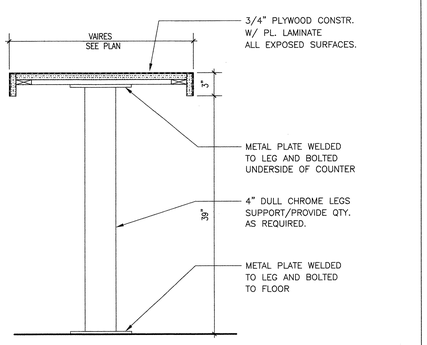

42" HIGHCOUNTER DETAIL — 17
SCALE: 1 1/2"=1'-0" — 4511-I421

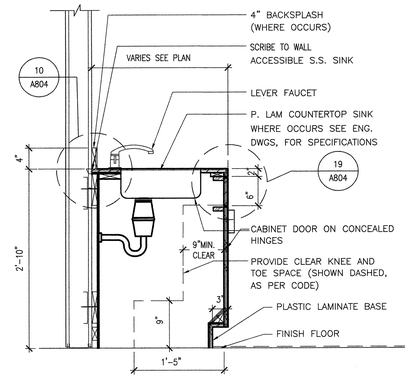

ACCESS SINK SECTION — 13
SCALE: 1"=1'-0" — 4511-I416

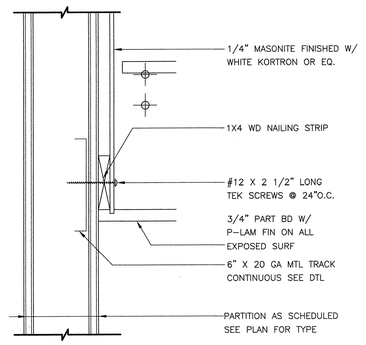

UPPER CABINET ANCHORAGE DETAIL — 9
SCALE: 3" = 1'-0" — 4511-I412

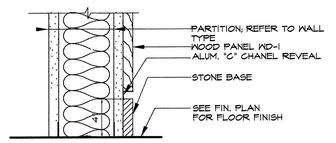

STONE BASE AT WOOD PANELS — 5
SCALE: 3"=1'-0" — 4511-I433

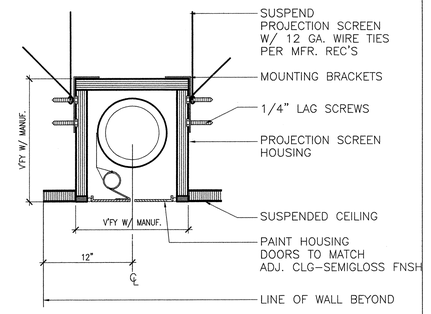

PROJECTION SCREEN — 1
SCALE: 3" = 1'-0" — 4511-I327

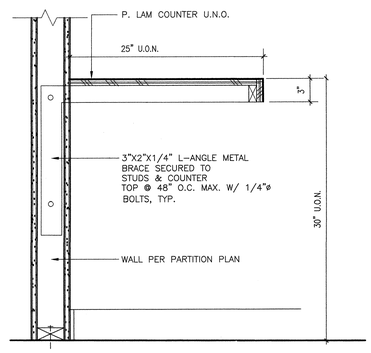

COUNTERTOP SECTION DETAIL — 18
SCALE: 1 1/2"=1'-0" — 4511-I422

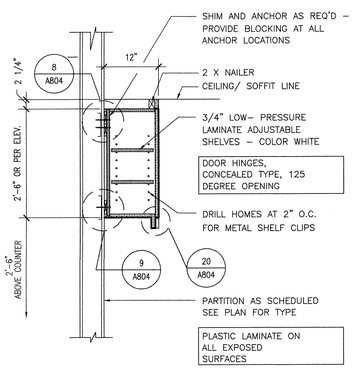

UPPER CABINET DETAIL — 14
SCALE: 1"=1'-0" — 4511-I417

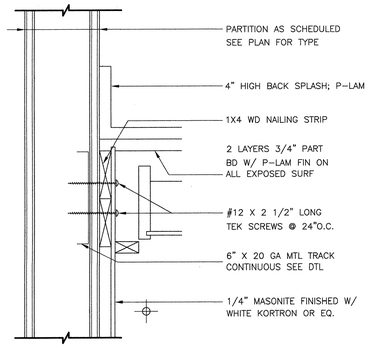

BASE CABINET ANCHORAGE DETAIL — 10
SCALE: 3" = 1'-0" — 4330-I413

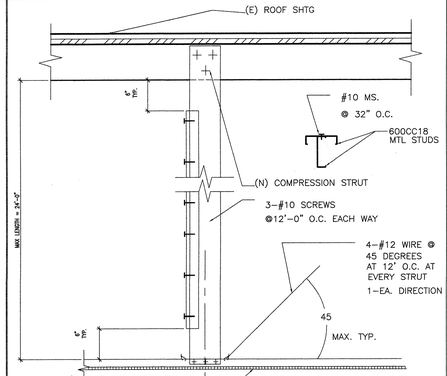

T-BAR CEILING STRUTS — 6
SCALE: 1 1/2"=1'-0" — 4511-I341

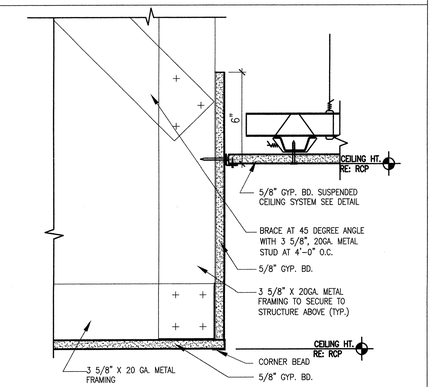

DRYWALL SOFFIT DETAIL — 2
SCALE: 3"=1'-0" — 4330-I332

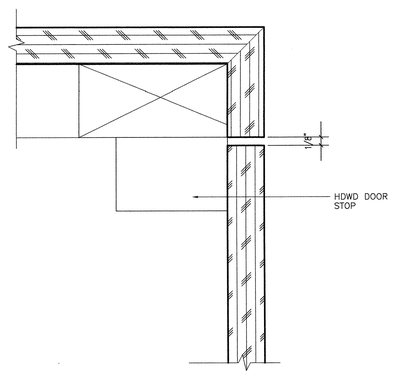

LOWER CABINET EDGE DETAIL — 19
SCALE: FULL — 4511-I423

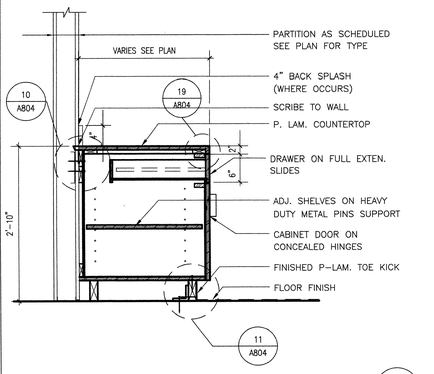

BASE CABINET DETAIL — 15
SCALE: 1"=1'-0" — 4511-I418

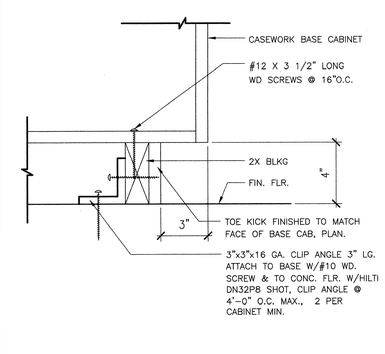

BASE CABINET DETAIL — 11
SCALE: 3" = 1'-0" — 4511-I414

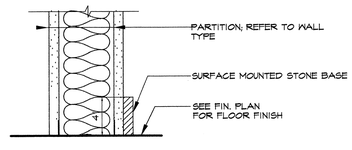

STONE BASE AT GYP. PARTITIONS — 7
SCALE: 3"=1'-0" — 4511-I434

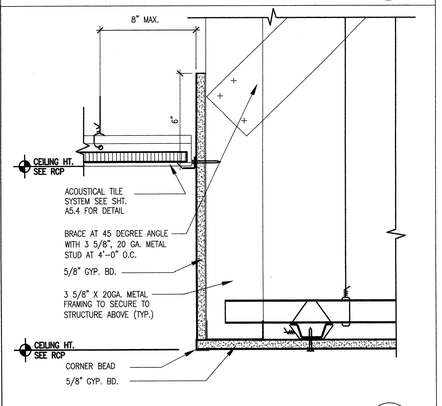

SOFFIT DETAIL — 3
SCALE: 3"=1'-0" — 4511-I336

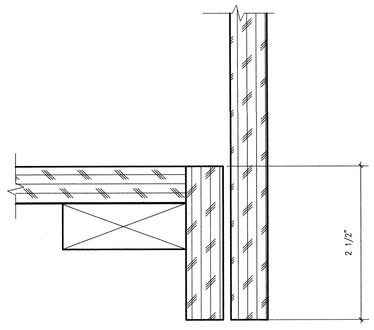

UPPER CABINET EDGE DETAIL — 20
SCALE: FULL — 4511-I424

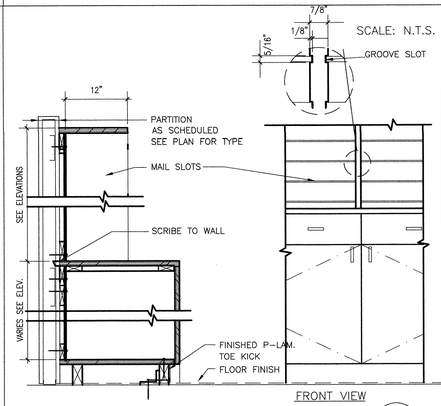

CABINET W/MAIL SLOT DETAIL — 16
SCALE: 1"=1'-0" — 4330-I420

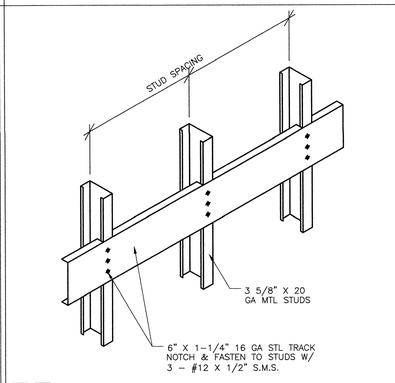

BACKING
SCALE: N.T.S. — 4511-I415 — 12

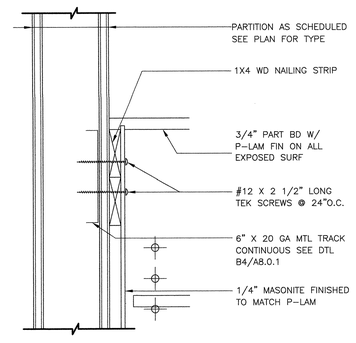

UPPER CABINET ANCHORAGE DETAIL — 8
SCALE: 3" = 1'-0" — 4511-I411

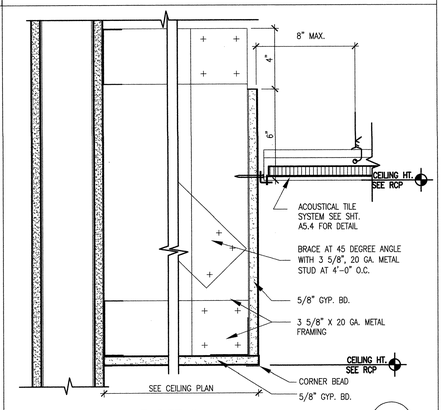

DRYWALL SOFFIT DETAIL — 4
SCALE: 3"=1'-0" — 4511-I332

CARRIER JOHNSON
ARCHITECTURE
INTERIOR DESIGN
PLANNING
GORDON R. CARRIER AIA
MICHAEL C. JOHNSON AIA
WILLIAM C. BOCKEN AIA
DEBORAH P. ELLIOTT IIDA
2600 MICHELSON DRIVE
SUITE 400
IRVINE, CALIFORNIA
92612
TEL 949 955-2353
FAX 949 955-2377
1301 THIRD AVENUE
SAN DIEGO, CALIFORNIA
92101
TEL 619 239-2353
FAX 619 239-6227

RECORD DOCUMENTS
THESE DOCUMENTS RELEASED BY CARRIER JOHNSON FOR USE AS RECORD DOCUMENTS ARE BASED ON THE LOCATION OF THE WORK AND SIGNIFICANT CHANGES MADE DURING THE CONSTRUCTION PROCESS, AND ARE BASED ON INFORMATION PROVIDED BY THE CONTRACTOR AND/OR AND OTHER PARTIES WHICH WILL BE ASSUMED RELIABLE. CARRIER JOHNSON CANNOT AND DOES NOT WARRANT THE CONSTRUCTION RECORD DOCUMENTS TO BE ACCURATE OR AND SHALL NOT BE RESPONSIBLE FOR ANY ERRORS OR OMISSIONS WHICH MAY BE INCORPORATED THEREIN AS A RESULT OF INACCURATE INFORMATION WHICH MUST INCLUDE FIELD CONFIRMATION OF EXISTING CONDITIONS.

ONTARIO PD:: HEADQUARTERS
2534 S. ARCHIBALD AVE.- ONTARIO, CALIFORNIA 91761

FO3 Field Order #13 07.01.03
5 Addendum 5 04.21.2003
3 Addendum 3
2 Addendum 2/Bldg. Dept. Re-Submittal 03.20.2003
Building Dept. Submittal 02.24.2003
ISSUES:
DIRECTORY/FILE NUMBER: 4511-A804
XREF'S DRAWINGS:
PROJECT NUMBER: 4511.00
DRAWN BY: CHECKED BY:
DATE: 2/24/03
SCALE: AS NOTED
TITLE: DETAILS

DRAWING NO: A8.0.4

ALL IDEAS, DESIGN, ARRANGEMENTS AND PLANS INDICATED OR REPRESENTED BY THIS DRAWING ARE OWNED BY, AND THE PROPERTY OF CARRIER JOHNSON, AND WERE CREATED, EVOLVED AND DEVELOPED FOR USE ON, AND IN CONNECTION WITH THIS PROJECT. NONE OF SUCH IDEAS, DESIGN, ARRANGEMENTS, OR PLANS SHALL BE USED BY, OR DISCLOSED TO ANY PERSON, FIRM, OR CORPORATION FOR ANY PURPOSE WHATSOEVER WITHOUT THE WRITTEN PERMISSION OF CARRIER JOHNSON. FILING THESE DRAWINGS OR SPECIFICATIONS WITH ANY PUBLIC AGENCY IS NOT A PUBLICATION OF SAME. NO COPYING, REPRODUCTION OR USE THEREOF IS PERMISSIBLE WITHOUT THE CONSENT OF CARRIER JOHNSON.

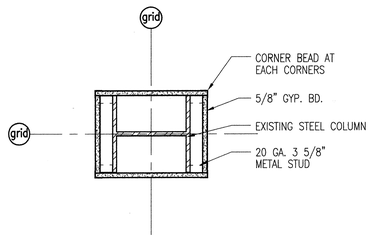

COLUMN COVER DETAIL (TYP.OR SIM)
SCALE: 1 1/2"=1'-0" 4511-I432 **17**

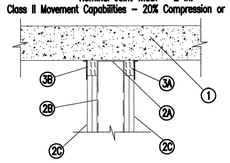

System No. HW-D-0106
Assembly Ratings – 1 and 2 Hr (See Items 2 and 3)
Nominal Joint Width – 2 in.
Class II Movement Capabilities – 20% Compression or Extension

1. Floor Assembly Min 4-1/2 in. thick steel-reinforced lightweight or normal weight (100-150 pcf) structural concrete.
2. Wall Assembly The 1 or 2 hr fire-rated gypsumboard /stud wall assembly shall be constructed of the materials and in the manner specified in the individual U400 Series Wall or Partition Design in the UL Fire Resistance Directory and shall include the following construction features:
   A. Steel Floor and Ceiling Runners Floor and ceiling runners of wall assembly shall consist of min No. 25 gauge galv steel channels sized to accommodate steel studs (Item 2B). Ceiling runner to be provided with 3 in. flanges. Ceiling runner secured with steel fasteners or by welds spaced 12 in. OC.
   A1. Light Gauge Framing*–Slotted Ceiling Runner As an alternate to the ceiling runner in Item 2A, slotted ceiling runner to consist of galv steel channel with slotted flanges sized to accommodate steel studs (Item 2B). Slotted ceiling runner installed with steel fasteners spaced max 24 in. OC.
   SLIPTRACK SYSTEMS INC – SLP-TRK
   A2 . Light Gauge Framing*–Vertical Deflection Ceiling Runner As an alternate to the ceiling runners in Items 2A and 2A1, vertical deflection ceiling runner to consist of galv steel channel with slotted vertical deflection clips mechanically fastened within runner. Slotted clips, provided with step bushings, for permanent fastening of steel studs. Flanges sized to accommodate steel studs (Item 2B). Vertical deflection ceiling runner installed with steel fasteners spaced max 24 in. OC.
   THE STEEL NETWORK INC – VertiTrack VTD250, VTD358, VTD400, VTD600 and VTD800
   B. Studs Steel studs to be min 2-1/2 in. wide. Studs cut 1/2 to 3/4 in. less in length than assembly height with bottom nesting in and resting on floor runner and with top nesting in ceiling runner without attachment. When slotted ceiling runner (Item 2A1) is used, steel studs secured to slotted ceiling runner with No. 8 by 1/2 in. long wafer head steel screws at midheight of slot on each side of wall. Stud spacing not to exceed 24 in. OC. When vertical deflection ceiling runner (Item 2A2) is used, steel studs secured to slotted vertical deflection clips, through the bushings, with steel screws at midheight of each slot. Stud spacing not to exceed 24 in. OC .
   C. Gypsum Board* Gypsumboard installed to a min total thickness of 5/8 or 1–1/4 in. on each side of wall, for 1 or 2 hr fire resistance rated walls, respectively. Wall to be constructed as specified in the individual U400 Series Design in the UL Fire Resistance Directory, except that a nominal 2 in. gap shall be maintained between the top of the gypsumboard and the bottom of concrete floor. The screws attaching the gypsumboard to the studs at the top of the first layer shall be located 4 in. from the floor assembly. The screws attaching the second layer to the steel studs shall be located 3-1/2 in. from the floor assembly. The hourly fire rating of the joint system is dependent on the hourly rating of the wall.
3. Joint System Max width of joint (at time of installation of joint system) is 2 in. The joint system is designed to accommodate a max 20 percent compression or extension from its installed width. The joint system shall consist of the following:
   A. Forming Material * Min 4 pcf mineral wool batt insulation cut into strips 5/8 or 1–1/4 in. thick for 1 and 2 Hr rated assemblies, respectively. Strips cut to width compressed 33 percent in width and firmly packed into gap between top of the gypsumboard and bottom of the floor assembly, flush with both surfaces of the wall. Adjoining lengths of batt to be tightly butted with butted seams spaced min 48 in. apart along the length of the joint.
   ROCK WOOL MANUFACTURING CO – Delta Board
   B. Fill, Void or Cavity Material* Min 1/8 in. wet thickness of fill material sprayed or trowled on each side of the wall to completely cover mineral wool forming material and to overlap a min 1/2 in. onto the gypsumboard and concrete floor assembly.
   HILTI CONSTRUCTION CHEMICALS, DIV OF
   HILTI INC – CP672 Firestop Spray
   *Bearing the UL Classification Mark

RATED GYP. BOARD WALL (HEAD)
SCALE: N.T.S. 4511-P015 **9**

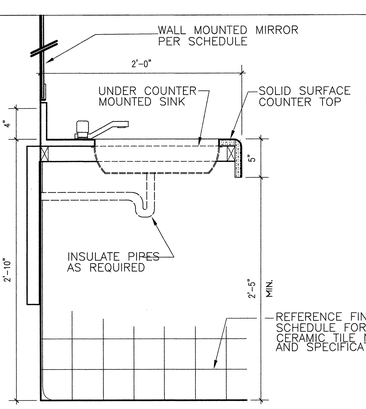

SECTION AT LAVATORY COUNTER
SCALE: AS NOTED 4511-I426 **5**

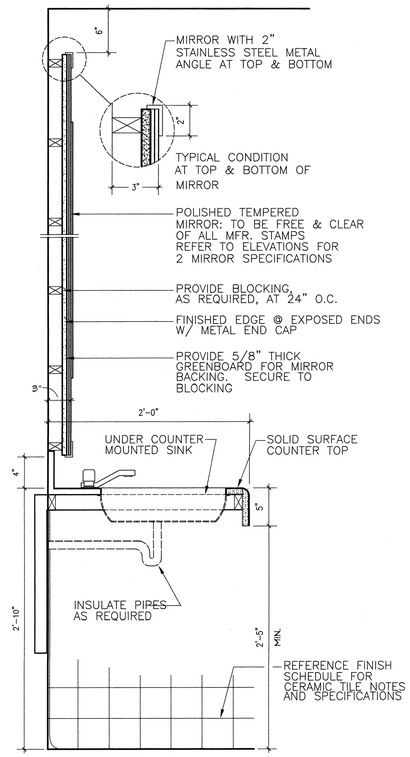

SECTION AT LAVARATORY COUNTER
SCALE: 1 1/2"=1'-0" 4511-I425 **2**

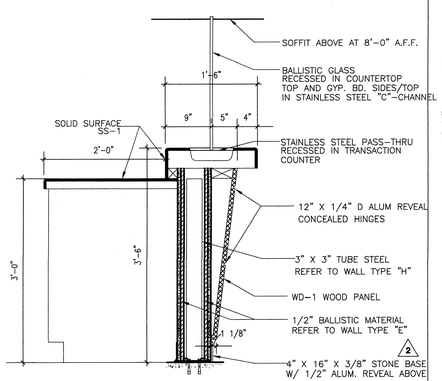

SECTION AT FRONT COUNTER
SCALE: 1"=1'-0" 4511-I428 **18**

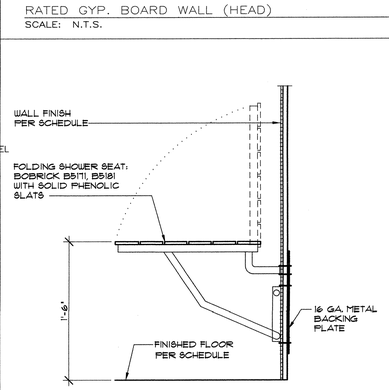

SEAT AT SHOWER
SCALE: 1-1/2" = 1'-0" **14**

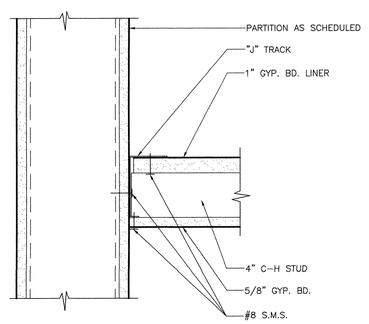

HORIZONTAL C-H STUD CONNECTION
SCALE: AS NOTED 4511-I427 **10**

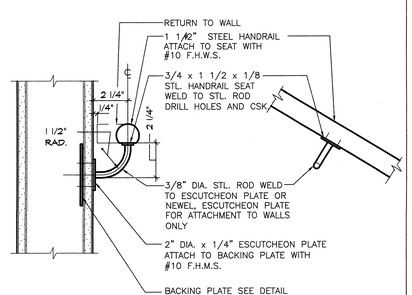

HANDRAIL
SCALE: AS NOTED 4511-I503 **6**

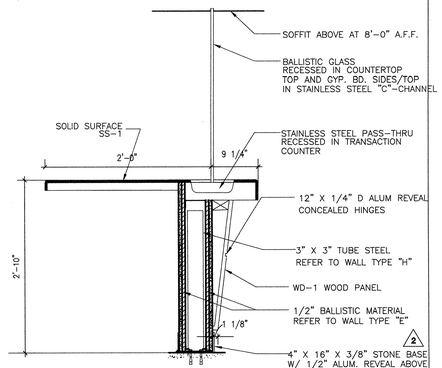

SECTION AT FRONT COUNTER
SCALE: 1"=1'-0" 4511-I429 **19**

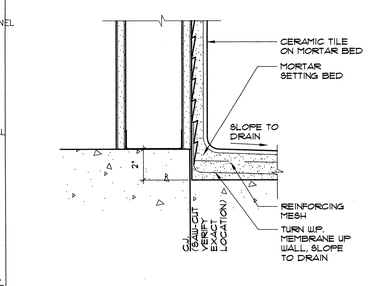

CREAMIC TILE AT STALL (TYP.)
SCALE: 3" = 1'-0" **15**

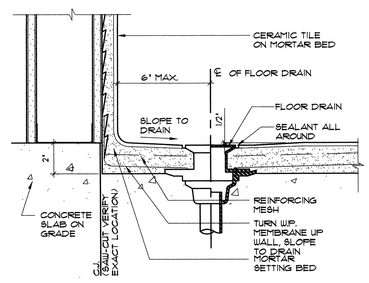

SHOWER FLOOR DRAIN AT HANDICAPPED STALL
SCALE: 3" = 1'-0" **11**

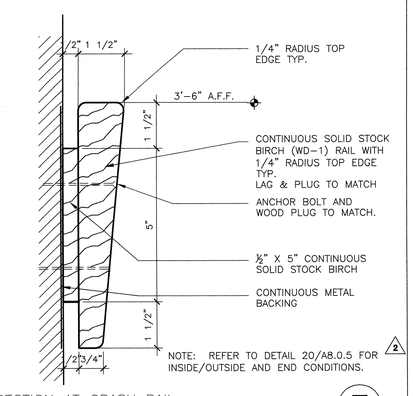

SECTION AT CRASH RAIL
SCALE: 6" = 1'-0" 4511-I430 **7**

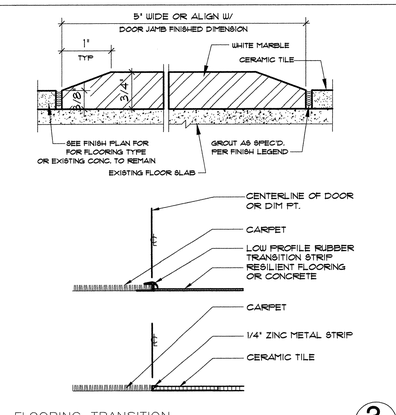

FLOORING TRANSITION
SCALE: FULL 4511-I111 **3**

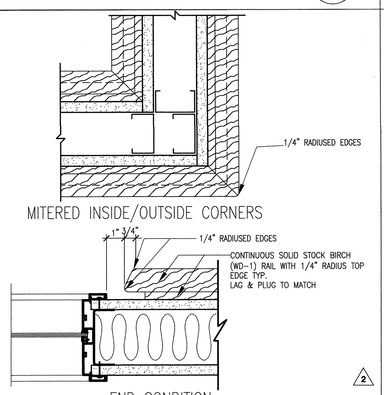

CRASH RAIL DETAILS
SCALE: 3"=1'-0" 4511-I431 **20**

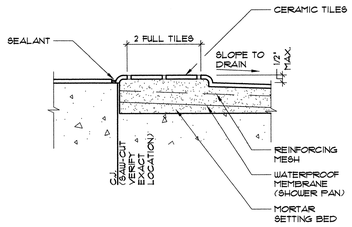

LOW CURB AT STALL
SCALE: 3" = 1'-0" **16**

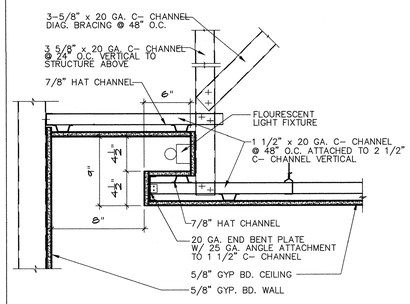

RESTROOM COVE DETAIL
SCALE: AS NOTED **12**

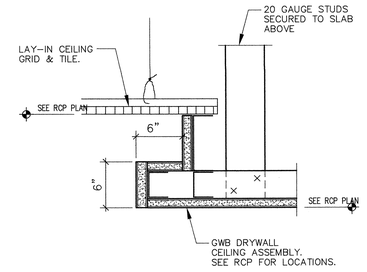

CEILING DETAIL
SCALE: 3" = 1'-0" **8**

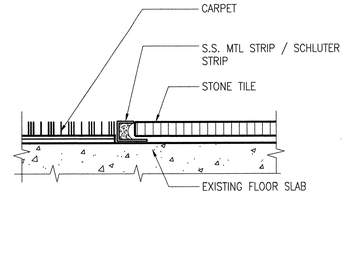

CARPET TO STONE TILE
SCALE: FULL 4511-I112 **4**

CARRIER JOHNSON
ARCHITECTURE
INTERIOR DESIGN
PLANNING
GORDON R. CARRIER AIA
MICHAEL C. JOHNSON AIA
WILLIAM C. BOCKEN AIA
DEBORAH P. ELLIOTT IIDA
2600 MICHELSON DRIVE SUITE 400
IRVINE, CALIFORNIA 92612
TEL 949 955-2353
FAX 949 955-2377
1301 THIRD AVENUE
SAN DIEGO, CALIFORNIA 92101
TEL 619 239-2353
FAX 619 239-6227

RECORD DOCUMENTS
THESE DOCUMENTS RELEASED BY CARRIER JOHNSON FOR USE AS RECORD DOCUMENTS WILL SHOW THE REPORTED LOCATION OF THE WORK AND SIGNIFICANT CHANGES MADE DURING THE CONSTRUCTION PROCESS. HOWEVER, THE UNVERIFIED INFORMATION PROVIDED BY THE CONTRACTOR AND OTHER PARTIES WHICH WILL BE ASSUMED RELIABLE CARRIER JOHNSON CANNOT, AND DOES NOT WARRANT THE ACCURACY OF SUCH INFORMATION AND SHALL NOT BE RESPONSIBLE FOR ANY ERRORS OR OMISSIONS WHICH MAY BE INCORPORATED THEREIN AS A RESULT. FIELD CONDITIONS SHALL ALWAYS INCLUDE FIELD CONFIRMATION OF EXISTING CONDITIONS.

ONTARIO PD:: HEADQUARTERS
2534 S. ARCHIBALD AVE., ONTARIO, CALIFORNIA 91761

Field Order #13 07.01.03 (FO)
Addendum 5 04.21.2003 (5)
Addendum 3 (3)
Addendum 2/Bldg. Dept. Re-Submittal 03.20.2003 (2)
Building Dept. Submittal 02.24.2003
ISSUES:
DIRECTORY/FILE NUMBER: 4511-A805
XREF'S DRAWINGS:
PROJECT NUMBER: 4511.00
DRAWN BY: CHECKED BY:
DATE: 2/24/03
SCALE: AS NOTED
TITLE: DETAILS
DRAWING NO: A8.0.5

ALL IDEAS, DESIGN, ARRANGEMENTS AND PLANS INDICATED OR REPRESENTED BY THIS DRAWING ARE OWNED BY, AND THE PROPERTY OF CARRIER JOHNSON AND WERE CREATED, EVOLVED AND DEVELOPED FOR USE ON, AND IN CONNECTION WITH THIS PROJECT. NONE OF SUCH IDEAS, DESIGN, ARRANGEMENTS, OR PLANS SHALL BE USED BY, OR DISCLOSED TO ANY PERSON, FIRM, OR CORPORATION FOR ANY PURPOSE WHATSOEVER WITHOUT THE WRITTEN PERMISSION OF CARRIER JOHNSON. FILING THESE DRAWINGS OR SPECIFICATIONS WITH ANY PUBLIC AGENCY IS NOT A PUBLICATION OF SAME. NO COPYING, REPRODUCTION OR USE THEREOF IS PERMISSIBLE WITHOUT THE CONSENT OF CARRIER JOHNSON.

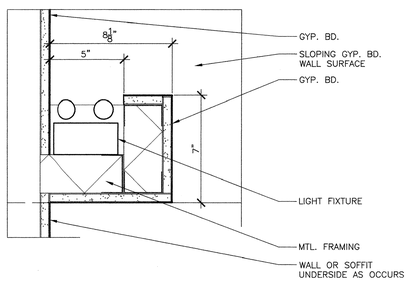

LIGHT SOFFIT 17
SCALE: 3"=1'-0" 4396E127

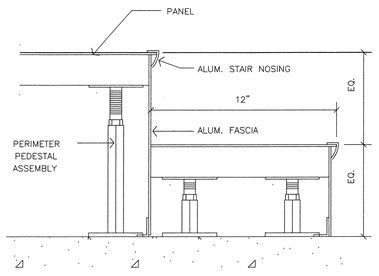

TYPICAL STEP DETAIL 13
SCALE: AS NOTED 4511-1505

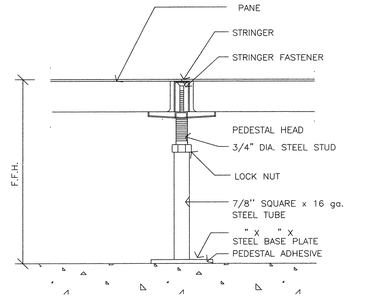

RIGID GRID ASSEMBLY 9
SCALE: AS NOTED 4511-1505

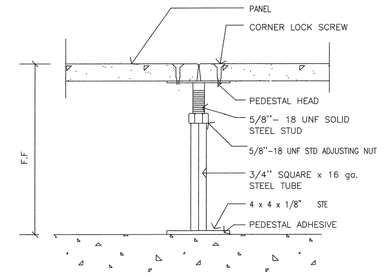

CORNER LOCK ASSEMBLY 5
SCALE: AS NOTED 4511-1505

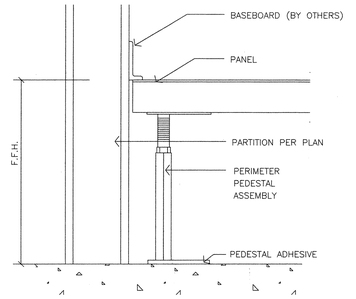

CONDITION AT WALL 1
SCALE: AS NOTED 4511-1505

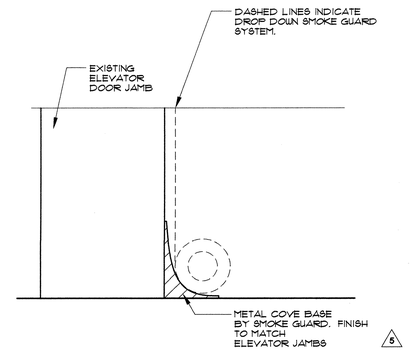

SMOKE GUARD BASE DETAIL 14
SCALE: AS NOTED 4511-1506

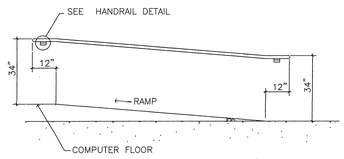

WALLMOUNTED HANDRAIL—RAMP 10
SCALE: AS NOTED 4511-1505

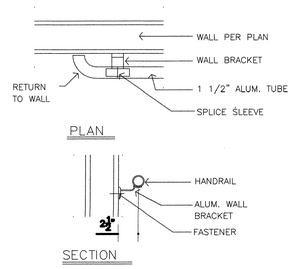

HANDRAIL MOUNTING DETAIL 6
SCALE: AS NOTED 4511-1505

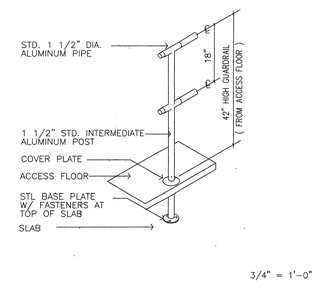

3/4" = 1'-0"

GUARDRAIL POST DETAIL 2
SCALE: AS NOTED 4511-1505

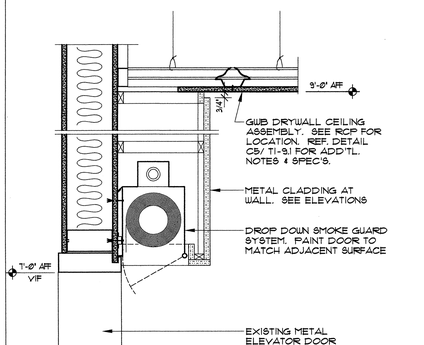

SMOKE GUARD AT CEILING DETAIL 15
SCALE: AS NOTED 4511-1507

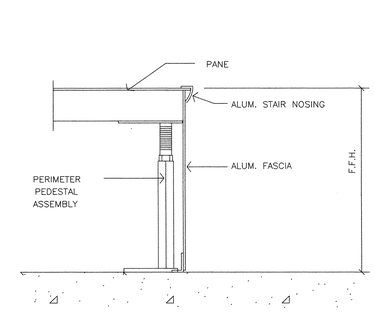

FASCIA DETAIL 11
SCALE: AS NOTED 4511-1505

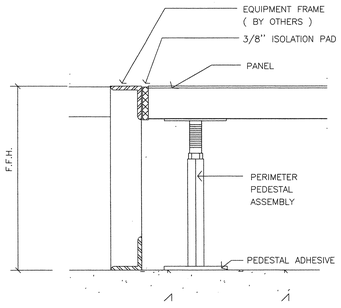

CONDITION AT EQUIPMENT FRAME 7
SCALE: AS NOTED 4511-1505

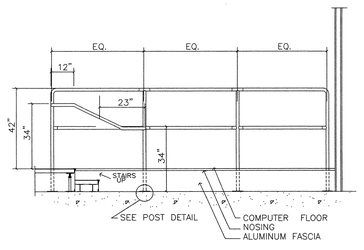

GUARDRAIL STAIR 3
SCALE: AS NOTED 4511-1505

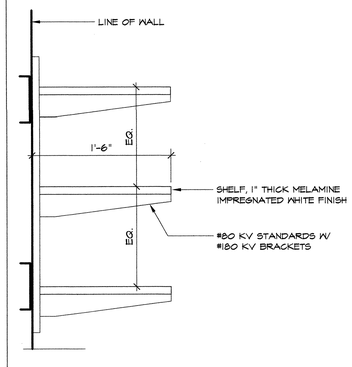

ADJUSTABLE SHELVING 16
SCALE : 1 1/2" = 1'-0" 4511-1438

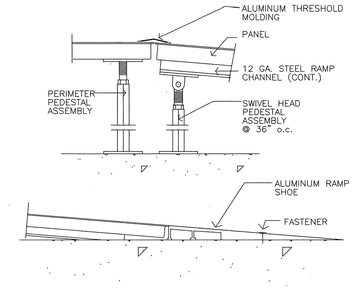

RAMP SECTION 12
SCALE: AS NOTED 4511-1505

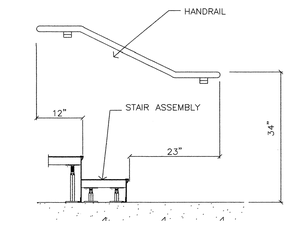

WALL MOUNTED HANDRAIL STAIR 8
SCALE: AS NOTED 4511-1505

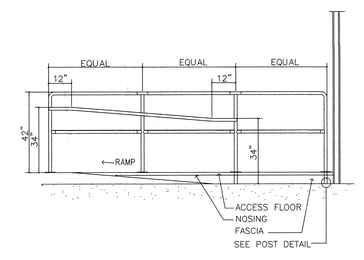

GUARDRAIL RAMP 4
SCALE: AS NOTED 4511-1505

ARCHITECTURE
INTERIOR DESIGN
PLANNING

CARRIER JOHNSON

GORDON R. CARRIER AIA
MICHAEL C. JOHNSON AIA

WILLIAM C. BOCKEN AIA
DEBORAH P. ELLIOTT IIDA

2600 MICHELSON DRIVE
SUITE 400
IRVINE, CALIFORNIA
92612

TEL 949 955-2353
FAX 949 955-2377

1301 THIRD AVENUE
SAN DIEGO, CALIFORNIA
92101

TEL 619 239-2353
FAX 619 239-6227

RECORD DOCUMENTS
THESE DOCUMENTS RELEASED BY CARRIER JOHNSON FOR USE AS RECORD DOCUMENTS WILL SHOW THE REPORTED LOCATION OF THE WORK AND SIGNIFICANT CHANGES MADE DURING CONSTRUCTION AS REPORTED TO THE CONSTRUCTION UNVERIFIED INFORMATION PROVIDED BY THE CONSTRUCTION AND OTHER PARTIES WHICH WILL BE ASSUMED RELIABLE. CARRIER JOHNSON CANNOT AND DOES NOT WARRANT THE ACCURACY OF SUCH INFORMATION AS IT WAS NOT PREPARED, AND SHALL NOT BE RESPONSIBLE FOR ANY ERRORS OR OMISSIONS WHICH MAY BE INCORPORATED THEREIN AS A RESULT. FIELD CONDITIONS CHANGES MAY INCLUDE FIELD CONFIRMATION OF EXISTING CONDITIONS.

ONTARIO PD:: HEADQUARTERS
2534 S. ARCHIBALD AVE., ONTARIO, CALIFORNIA 91761

FIELD Field Order #13 07.01.03
5 Addendum 5 04.21.2003
3 Addendum 3
2 Addendum 2/Bldg Dept. Re-Submittal 03.20.2003
Building Dept. Submittal 02.24.2003
ISSUES:
DIRECTORY/FILE NUMBER: 4511-A805

XREF'S DRAWINGS:

PROJECT NUMBER: 4511.00
DRAWN BY: CHECKED BY:
DATE:
SCALE: AS NOTED
TITLE: DETAILS

DRAWING NO: 2
A8.0.6

ALL IDEAS, DESIGN ARRANGEMENTS AND PLANS INDICATED OR REPRESENTED BY THIS DRAWING ARE OWNED BY AND THE PROPERTY OF CARRIER JOHNSON, AND WERE CREATED, EVOLVED AND DEVELOPED FOR USE ON, AND IN CONNECTION WITH, SPECIFIED PROJECT. NONE OF SUCH IDEAS, DESIGN ARRANGEMENTS, OR PLANS SHALL BE USED BY, OR DISCLOSED TO, ANY PERSON, FIRM, OR CORPORATION FOR ANY PURPOSE WHATSOEVER WITHOUT THE WRITTEN PERMISSION OF CARRIER JOHNSON. FILING THESE DRAWINGS OR SPECIFICATIONS WITH ANY PUBLIC AGENCY IS NOT A PUBLICATION OF SAME. NO COPYING, REPRODUCTION OR USE THEREOF IS PERMISSIBLE WITHOUT THE CONSENT OF CARRIER JOHNSON.

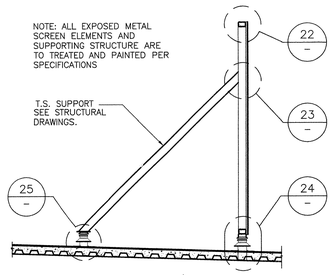

ROOF SCREEN 21

SCALE: 1/4" = 1'-0" 4511E082

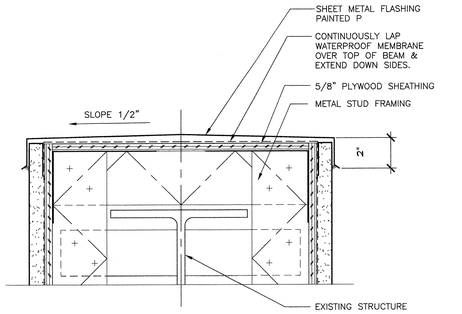

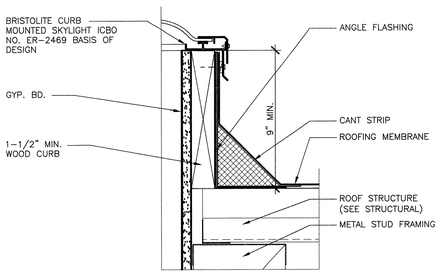

SKYLIGHT CURB 11

SCALE: 3"=1'-0" 4396E006

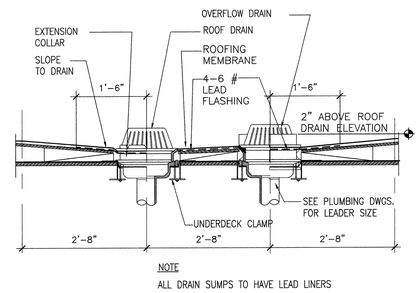

ROOF DRAIN 6

SCALE: 3/4"=1'-0" 4511E001

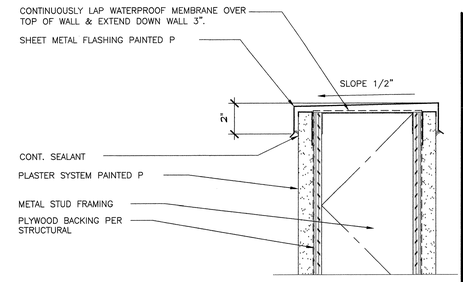

PARAPET WALL 1

SCALE: 3"=1'-0" 4511E002

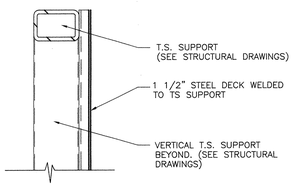

ROOF SCREEN COPING 22

SCALE: 1 1/2" = 1'-0" 4511E083

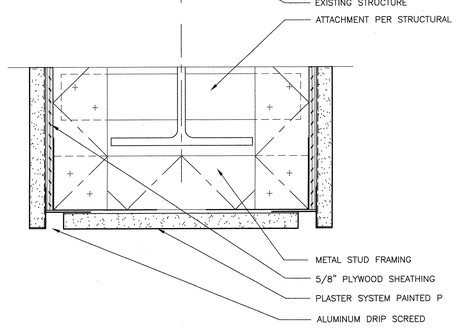

PLASTER • GIRDER 17

SCALE: 3"=1'-0" 4511E014

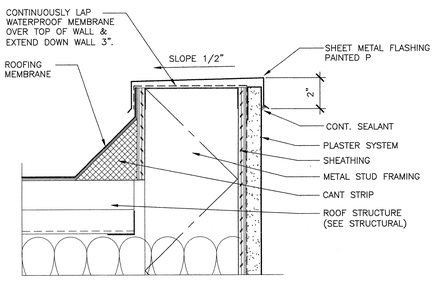

PLASTER WALL 12

SCALE: 3"=1'-0" 4511E013

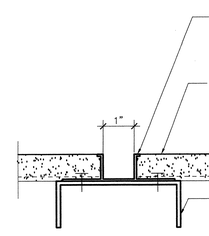

PLASTER REVEAL 7

SCALE: HALF SIZE 4511E012

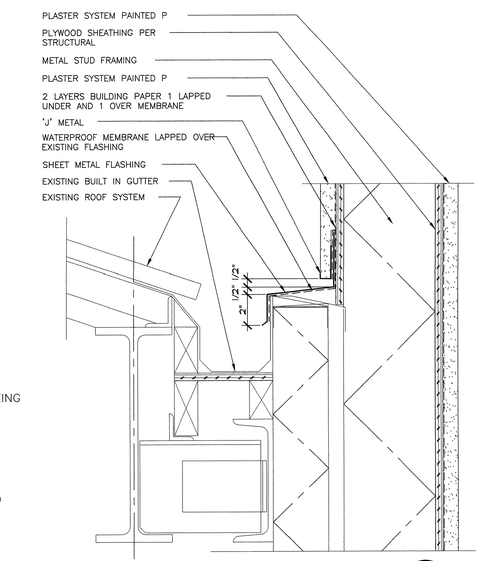

GUTTER 3

SCALE: 3"=1'-0" 4511E004

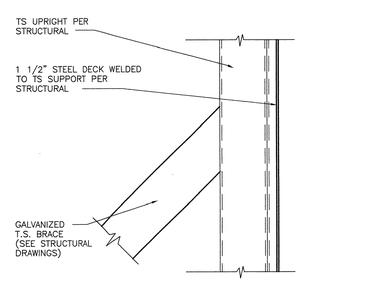

BRACE AT ROOF SCREEN 23

SCALE: 1 1/2" = 1'-0" 4511E084

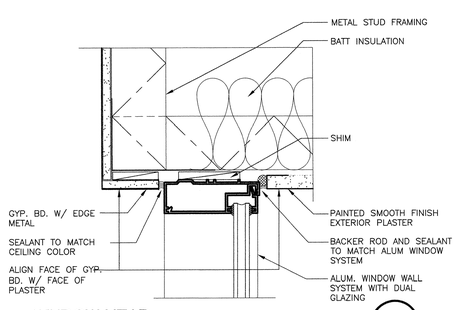

WINDOW HEAD 18

SCALE: 3"=1'-0" 4511E013

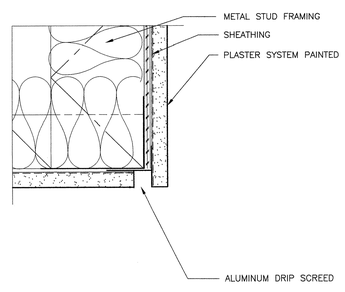

PLASTER WALL 13

SCALE: 3"=1'-0" 4511E013

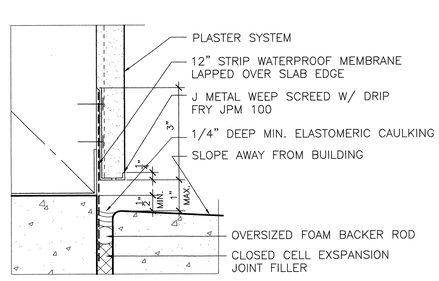

WEEP SCREED 8

SCALE: HALF SIZE 4511E012

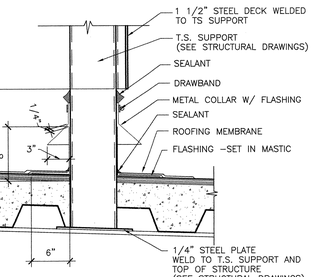

ROOF SCREEN POST BASE 24

SCALE: 1 1/2" = 1'-0" 4511E085

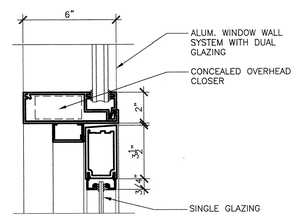

DOOR HEAD 19

SCALE: 3" = 1'-0" 4511E013

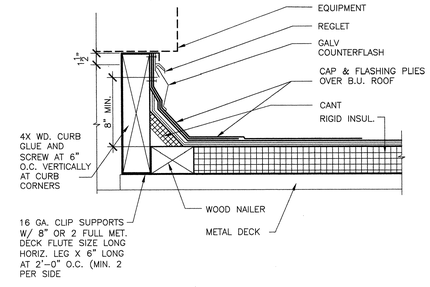

TYPICAL EQUIPMENT CURB 14

SCALE: 1 1/2"=1'-0" 4511E117

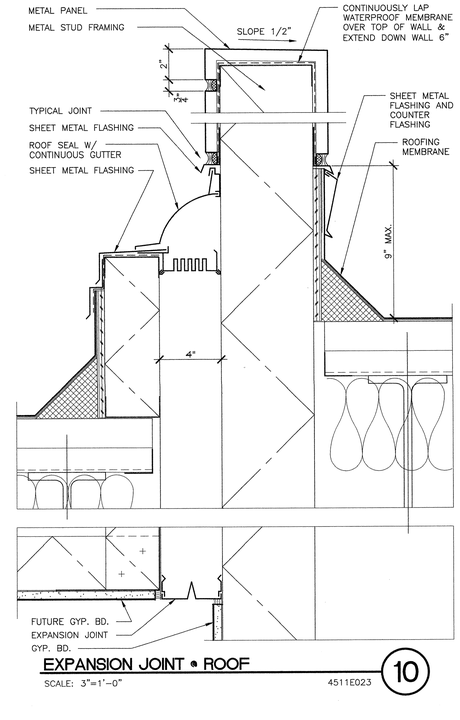

EXPANSION JOINT • ROOF 10

SCALE: 3"=1'-0" 4511E023

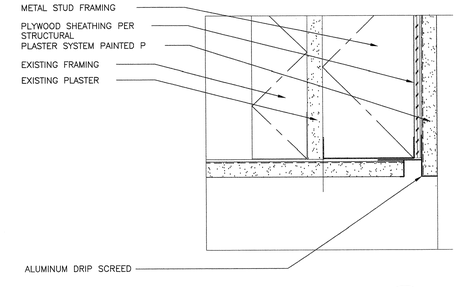

PLASTER EDGE 4

SCALE: 3"=1'-0" 4511E003

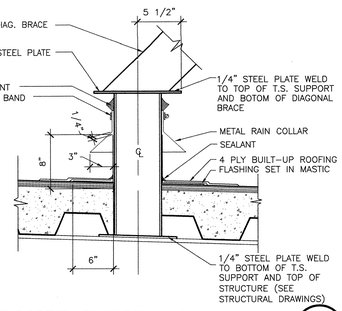

ROOF SCREEN SUPPORT BASE 25

SCALE: 1 1/2" = 1'-0" 4511E086

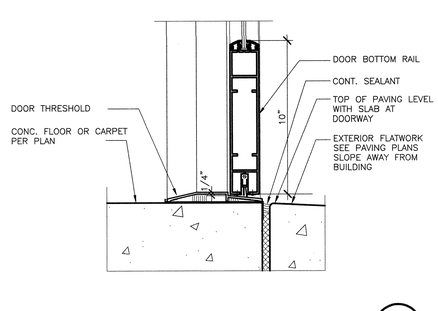

DOOR SILL 20

SCALE: 3"=1'-0" 4511E013

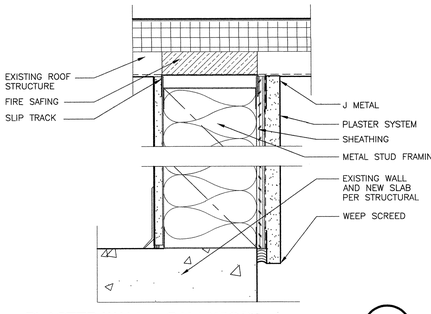

PLASTER WALL • SALLYPORT 15

SCALE: 3"=1'-0" 4511E013

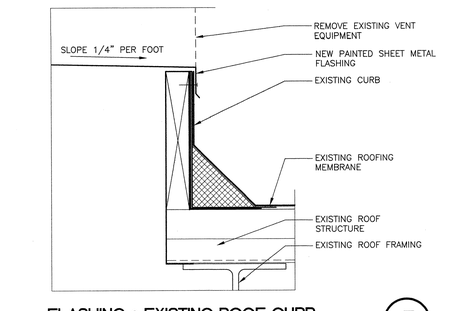

FLASHING • EXISTING ROOF CURB 5

SCALE: 3"=1'-0" 4396E006

CARRIER JOHNSON

ARCHITECTURE
INTERIOR DESIGN
PLANNING

GORDON R. CARRIER AIA
MICHAEL C. JOHNSON AIA

WILLIAM C. BOCKEN AIA
DEBORAH P. ELLIOTT IIDA

2600 MICHELSON DRIVE
SUITE 400
IRVINE, CALIFORNIA
92612

TEL 949 955-2353
FAX 949 955-2377

1301 THIRD AVENUE
SAN DIEGO, CALIFORNIA
92101

TEL 619 239-2353
FAX 619 239-6227

RECORD DOCUMENTS
THESE DOCUMENTS RELEASED BY CARRIER JOHNSON FOR USE BY CONTRACTOR(S) AS SHOWN THEREON FOR LOCATION OF THE WORK AND SIGNIFICANT CHANGES MADE DURING THE CONSTRUCTION PROCESS, AND ARE BASED ON INFORMATION FURNISHED BY CONTRACTOR(S), SUBCONTRACTORS AND OTHER PARTIES WHICH WILL BE ASSUMED RELIABLE. CARRIER JOHNSON CANNOT AND DOES NOT WARRANT THE ACCURACY AND COMPLETENESS OF SUCH INFORMATION AND SHALL NOT BE RESPONSIBLE FOR ANY ERRORS OR OMISSIONS WHICH MAY BE INCORPORATED THEREIN AS A RESULT THEREOF. RECORD DOCUMENTS SHALL MUST INCLUDE FIELD CONFIRMATION OF EXISTING CONDITIONS.

ONTARIO PD:: HEADQUARTERS

2534 S. ARCHIBALD AVE., ONTARIO, CALIFORNIA 91761

2 Field Order #13 07.01.03
1 Addendum 5 04.21.2003
3 Addendum 3
2 Addendum 2/Bldg. Dept. Re-Submittal 03.20.2003
Building Dept. Submittal 02.24.2003

ISSUES:
DIRECTORY/FILE NUMBER: 4511-A811
XREF'S DRAWINGS:
PROJECT NUMBER: 4511.00
DRAWN BY: CHECKED BY:
DATE: 1/23/03
SCALE: AS NOTED
TITLE: DETAILS

DRAWING NO: A8.1.1
2

ALL IDEAS, DESIGN, ARRANGEMENTS AND PLANS INDICATED OR REPRESENTED BY THIS DRAWING ARE OWNED BY AND THE PROPERTY OF CARRIER JOHNSON, AND WERE CREATED, EVOLVED AND DEVELOPED FOR USE ON, AND IN CONNECTION WITH, THE SPECIFIED PROJECT. NONE OF SUCH IDEAS, DESIGNS, ARRANGEMENTS OR PLANS SHALL BE USED BY, OR DISCLOSED TO, ANY PERSON, FIRM, OR CORPORATION FOR ANY PURPOSE WHATSOEVER WITHOUT THE WRITTEN PERMISSION OF CARRIER JOHNSON. FILING THESE DRAWINGS OR SPECIFICATIONS WITH ANY PUBLIC AGENCY IS NOT A PUBLICATION OF SAME. NO COPYING, REPRODUCTION OR USE THEREOF IS PERMISSIBLE WITHOUT THE CONSENT OF CARRIER JOHNSON.

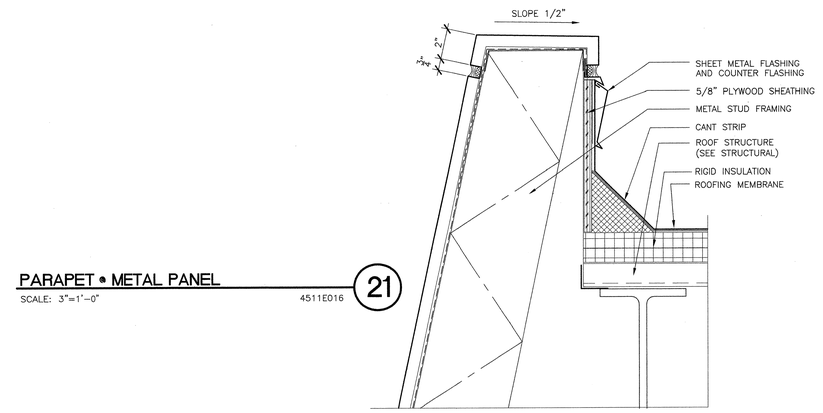

PARAPET • METAL PANEL 21
SCALE: 3"=1'-0" 4511E016

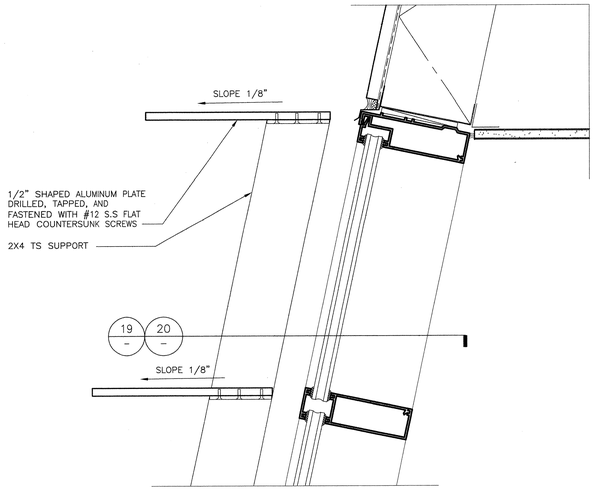

SCREEN 23
SCALE: 3"=1'-0" 4511E020

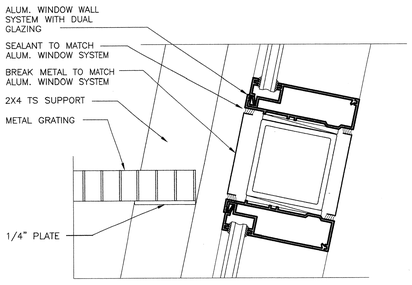

GRATING 24
SCALE: 3"=1'-0" 4511E020

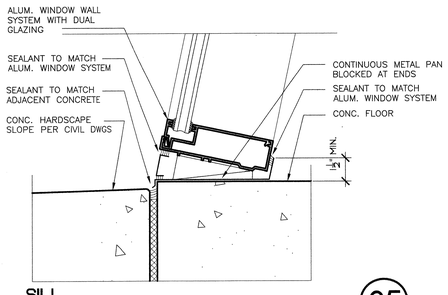

SILL 25
SCALE: 3"=1'-0" 4511E020

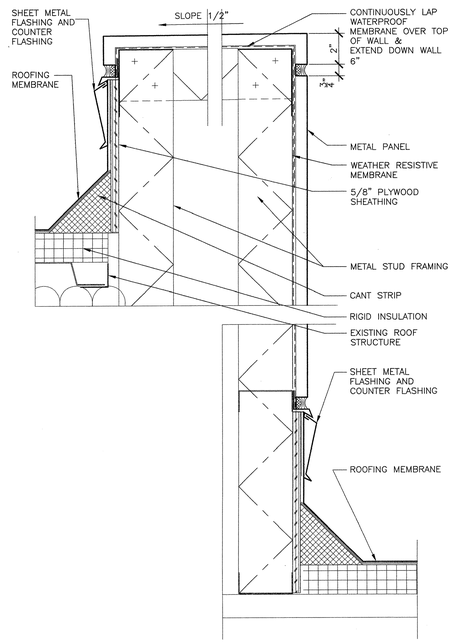

PARAPET • METAL PANEL 12
SCALE: 3"=1'-0" 4511E047

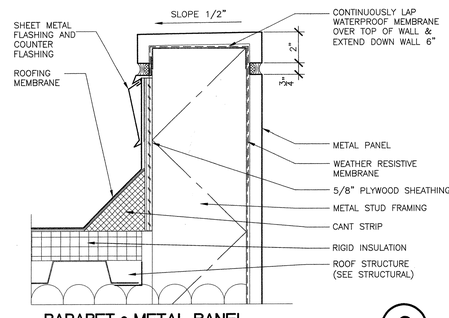

PARAPET • METAL PANEL 6
SCALE: 3"=1'-0" 4511E017

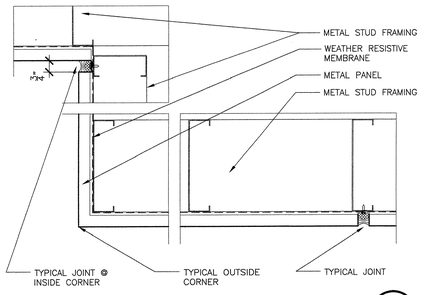

TYPICAL CORNER • METAL PANEL 7
SCALE: 3"=1'-0" 4511E030

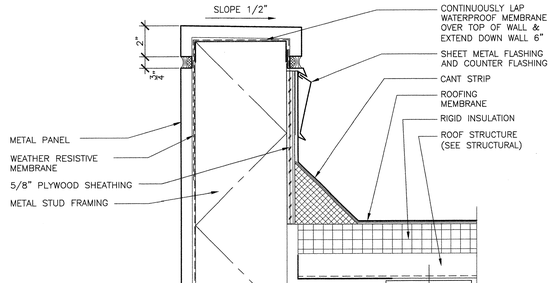

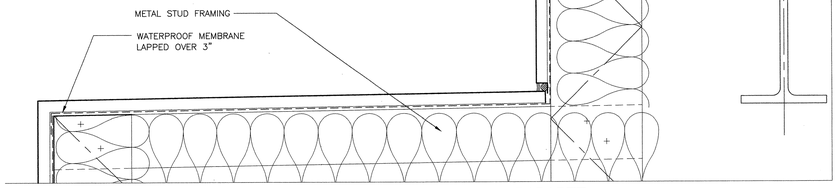

PARAPET 9
SCALE: 3"=1'-0" 4511E046

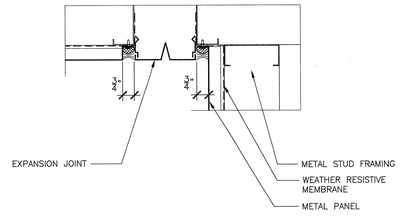

EXPANSION • METAL PANEL 10
SCALE: 3"=1'-0" 4511E049

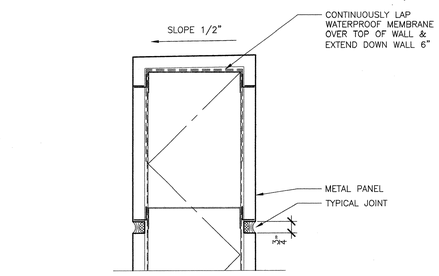

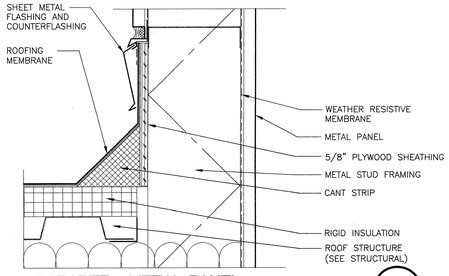

PARAPET • METAL PANEL 2
SCALE: 3"=1'-0" 4511E011

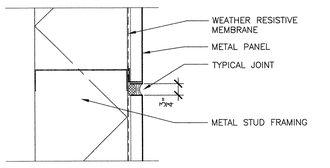

TYPICAL JOINT • METAL PANEL 3
SCALE: 3"=1'-0" 4511E018

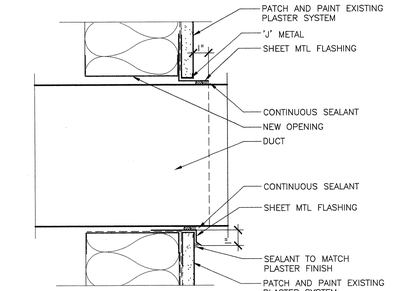

WALL PENETRATION FLASHING 4
SCALE: 3"=1'-0" 4396E126

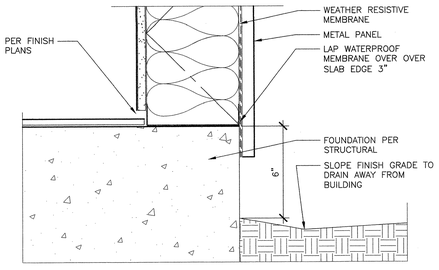

SILL • METAL PANEL 5
SCALE: 3"=1'-0" 4511E011

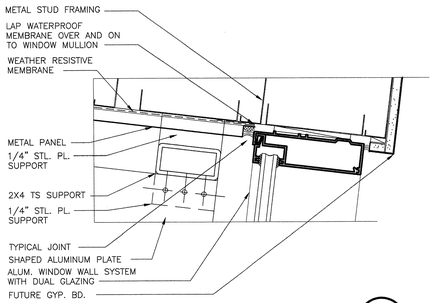

SCREEN ATTACHMENT PLAN 19
SCALE: 3"=1'-0" 4511E016

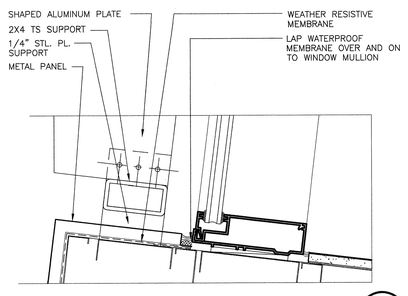

SCREEN ATTACHMENT PLAN 20
SCALE: 3"=1'-0" 4511E016

ARCHITECTURE
INTERIOR DESIGN
PLANNING

CARRIER JOHNSON

GORDON R. CARRIER AIA
MICHAEL C. JOHNSON AIA

WILLIAM C. BOCKEN AIA
DEBORAH F. ELLIOTT IIDA

2600 MICHELSON DRIVE
SUITE 400
IRVINE, CALIFORNIA
92612

TEL 949 955-2353
FAX 949 955-2377

1301 THIRD AVENUE
SAN DIEGO, CALIFORNIA
92101

TEL 619 239-2353
FAX 619 239-6227

RECORD DOCUMENTS
THESE DOCUMENTS RELEASED BY CARRIER JOHNSON FOR USE AS RECORD DOCUMENTS REFLECT ALL KNOWN FIELD LOCATION OF THE WORK AND SIGNIFICANT CHANGES MADE DURING THE CONSTRUCTION PROCESS, AND ARE BASED ON MARKED-UP PRINTS, DRAWINGS AND OTHER DATA FURNISHED BY CONTRACTOR AND OTHER PARTIES WHICH WILL BE ASSUMED RELIABLE. CARRIER JOHNSON CANNOT AND DOES NOT WARRANT THE ACCURACY, NOR BE RESPONSIBLE FOR THE INFORMATION AS SHOWN, NOT BE RESPONSIBLE FOR ANY INACCURACIES OR OMISSIONS WHICH MAY BE INCORPORATED THEREIN AS A RESULT. FUTURE CONSTRUCTION PLANNING MUST INCLUDE FIELD CONFIRMATION OF EXISTING CONDITIONS.

ONTARIO PD:: HEADQUARTERS

2534 S. ARCHIBALD AVE., ONTARIO, CALIFORNIA 91761

Field Order #13 07.01.03
5 Addendum 5 04.21.2003
3 Addendum 3
2 Addendum 2/Bldg. Dept. Re-Submittal 03.20.2003
Building Dept. Submittal 02.24.2003
ISSUES:

DIRECTORY/FILE NUMBER: 4511-A811
XREF'S DRAWINGS:
PROJECT NUMBER: 4511.00
DRAWN BY: CHECKED BY:
DATE:
SCALE: AS NOTED
TITLE: DETAILS

DRAWING NO: A8.1.2 2

ALL IDEAS, DESIGN, ARRANGEMENTS AND PLANS INDICATED OR REPRESENTED BY THIS DRAWING ARE OWNED BY, AND THE PROPERTY OF CARRIER JOHNSON, AND WERE CREATED, EVOLVED AND DEVELOPED FOR USE ON, AND IN CONNECTION WITH THIS PROJECT. NONE OF SUCH IDEAS, DESIGN, ARRANGEMENTS, OR PLANS SHALL BE USED BY, OR DISCLOSED TO ANY PERSON, FIRM, OR CORPORATION FOR ANY PURPOSE WHATSOEVER WITHOUT THE WRITTEN PERMISSION OF CARRIER JOHNSON. FILING THESE DRAWINGS OR SPECIFICATIONS WITH ANY PUBLIC AGENCY IS NOT A PUBLICATION OF SAME. NO COPYING, REPRODUCTION OR USE THEREOF IS PERMISSIBLE WITHOUT THE CONSENT OF CARRIER JOHNSON.

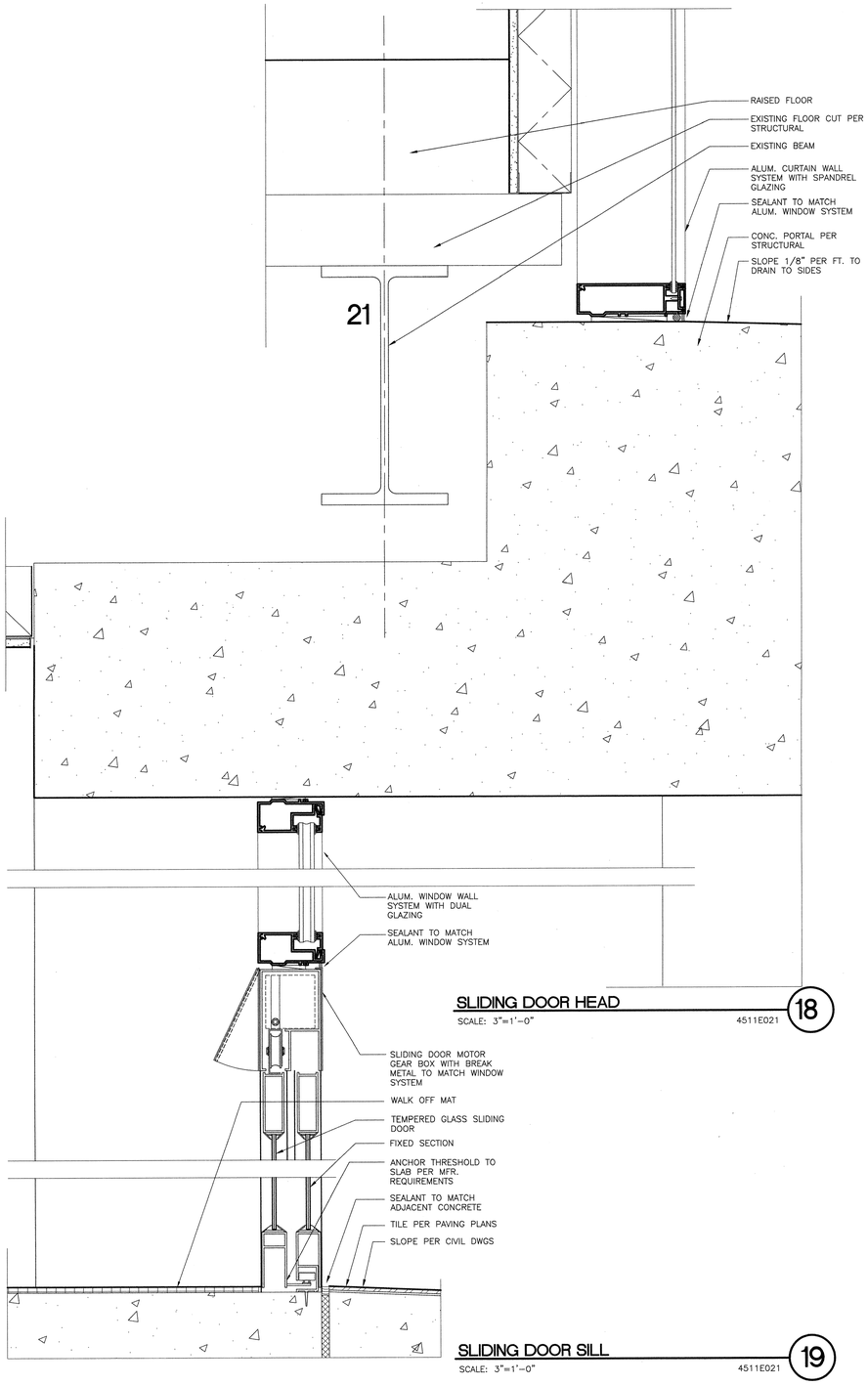

SLIDING DOOR HEAD — SCALE: 3"=1'-0" — 4511E021 — 18

SLIDING DOOR SILL — SCALE: 3"=1'-0" — 4511E021 — 19

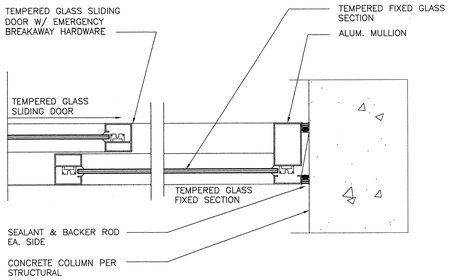

SLIDING DOOR JAMB — SCALE: 3"=1'-0" — 4511E021 — 20

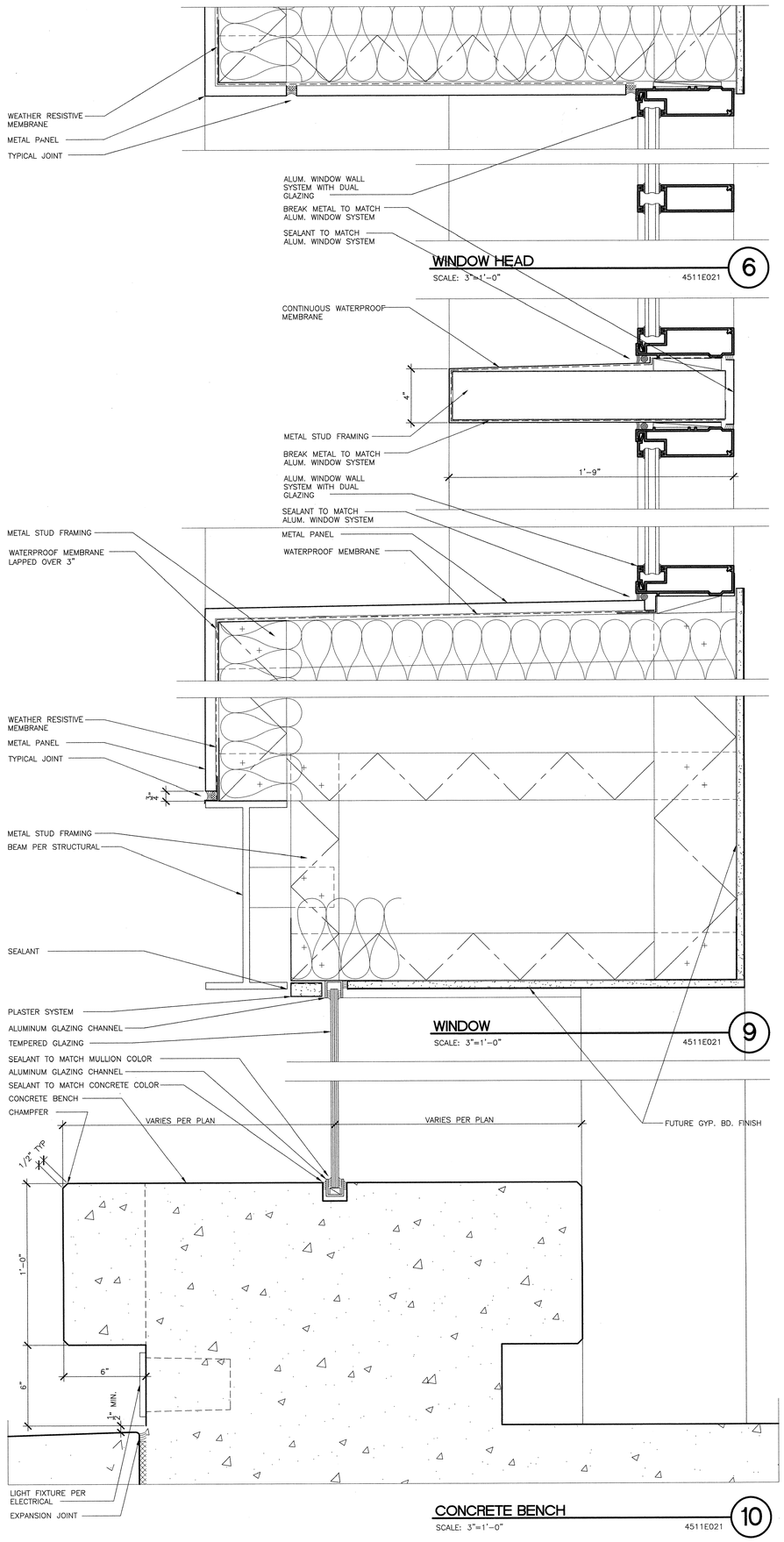

WINDOW HEAD — SCALE: 3"=1'-0" — 4511E021 — 6

WINDOW — SCALE: 3"=1'-0" — 4511E021 — 9

CONCRETE BENCH — SCALE: 3"=1'-0" — 4511E021 — 10

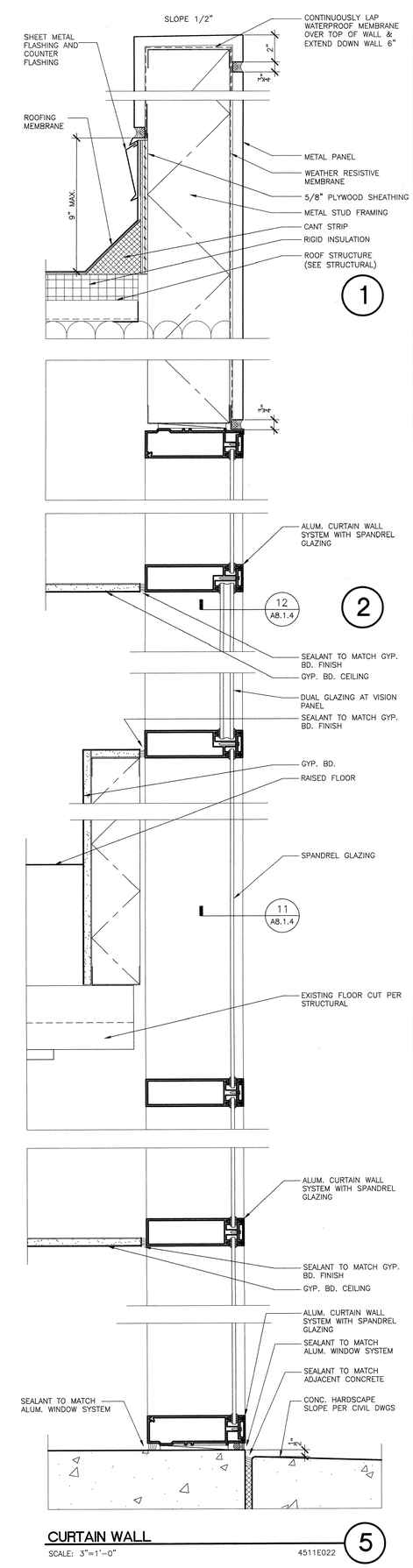

CURTAIN WALL — SCALE: 3"=1'-0" — 4511E022 — 5

ARCHITECTURE
INTERIOR DESIGN
PLANNING

CARRIER JOHNSON

GORDON R. CARRIER AIA
MICHAEL C. JOHNSON AIA

WILLIAM C. BOCKEN AIA
DEBORAH F. ELLIOTT IIDA

2600 MICHELSON DRIVE
SUITE 400
IRVINE, CALIFORNIA
92612

TEL 949 955-2353
FAX 949 955-2377

1301 THIRD AVENUE
SAN DIEGO, CALIFORNIA
92101

TEL 619 239-2353
FAX 619 239-6227

RECORD DOCUMENTS
THESE DOCUMENTS RELEASED BY CARRIER JOHNSON FOR USE AS RECORD DOCUMENTS REFLECT ALL KNOWN FIELD LOCATION OF THE WORK AND SIGNIFICANT CHANGES MADE DURING THE CONSTRUCTION PROCESS, AND ARE BASED ON INFORMATION FURNISHED BY CONTRACTOR, SUBCONTRACTORS AND OTHER PARTIES WHICH WILL BE ASSUMED RELIABLE. CARRIER JOHNSON CANNOT AND DOES NOT WARRANT THE ACCURACY AND/OR COMPLETENESS OF THE INFORMATION AND MAY NOT BE HELD LIABLE FOR ANY ERRORS OR OMISSIONS WHICH MAY BE INCORPORATED THEREIN AS A RESULT. FUTURE CONSTRUCTION PLANNING MUST INCLUDE FIELD CONFIRMATION OF EXISTING CONDITIONS.

ONTARIO PD:: HEADQUARTERS

2534 S. ARCHIBALD AVE., ONTARIO, CALIFORNIA 91761

FIELD ORDER #13 07.01.03
5 Addendum 5 04.21.2003
3 Addendum 3
2 Addendum 2/Bldg. Dept. Re-Submittal 03.20.2003
Building Dept. Submittal 02.24.2003
ISSUES:
DIRECTORY/FILE NUMBER: 4511-A813
XREF'S DRAWINGS:
PROJECT NUMBER: 4511.00
DRAWN BY: CHECKED BY:
DATE:
SCALE: AS NOTED
TITLE: DETAILS

DRAWING NO: A8.1.3 2

ALL IDEAS, DESIGN, ARRANGEMENTS AND PLANS INDICATED OR REPRESENTED BY THIS DRAWING ARE OWNED BY, AND THE PROPERTY OF CARRIER JOHNSON AND WERE CREATED, EVOLVED AND DEVELOPED FOR USE ON, AND IN CONNECTION WITH THIS PROJECT. NONE OF SUCH IDEAS, DESIGN, ARRANGEMENTS, OR PLANS SHALL BE USED BY, OR DISCLOSED TO ANY PERSON, FIRM, OR CORPORATION FOR ANY PURPOSE WHATSOEVER WITHOUT THE WRITTEN PERMISSION OF CARRIER JOHNSON. FILING THESE DRAWINGS OR SPECIFICATIONS WITH ANY PUBLIC AGENCY IS NOT A PUBLICATION OF SAME. NO COPYING, REPRODUCTION OR USE THEREOF IS PERMISSIBLE WITHOUT THE CONSENT OF CARRIER JOHNSON.

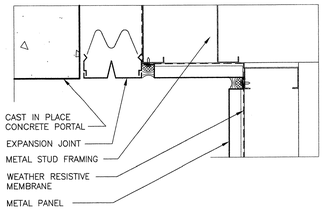

EXPANSION • CONC. PORTAL 21
SCALE: 3"=1'-0" 4511E051

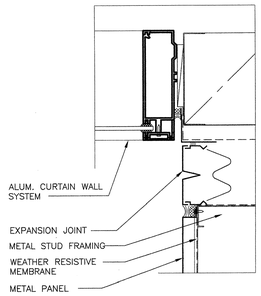

EXPANSION • STOREFRONT 16
SCALE: 3"=1'-0" 4511E051

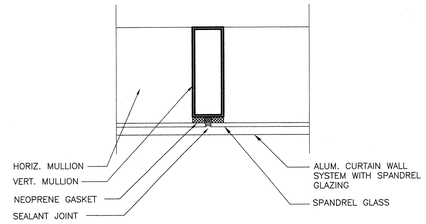

BUTT JOINT • SPANDREL GLASS 11
SCALE: 3"=1'-0" 4511E031

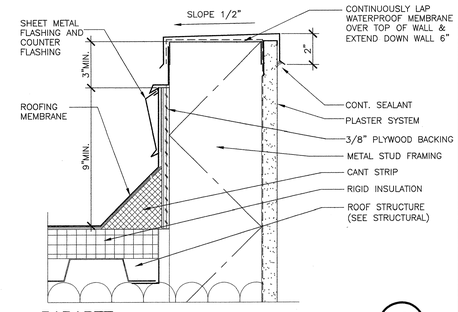

PARAPET 1
SCALE: 3"=1'-0" 4511E026

EXPANSION • CONC. PORTAL 17
SCALE: 3"=1'-0" 4511E051

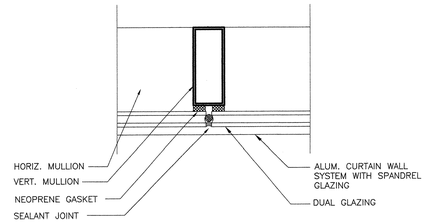

BUTT JOINT • DUAL GLAZING 12
SCALE: 3"=1'-0" 4511E031

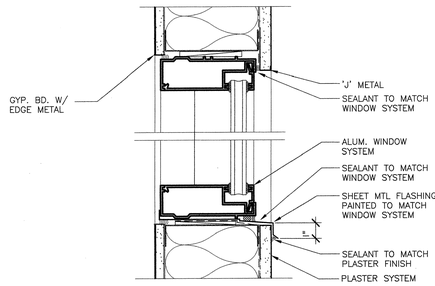

WINDOW 7
SCALE: 3"=1'-0" 4396E026

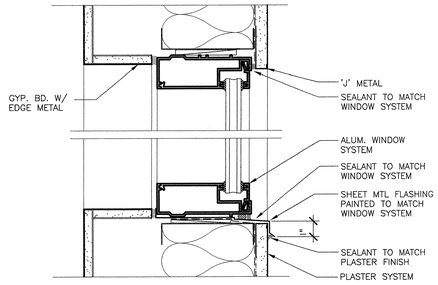

PUNCHED WINDOW 2
SCALE: 3"=1'-0" 4396E026

WINDOW HEAD 23
SCALE: 3"=1'-0" 4511E024

SOFFIT EDGE DETAIL 18
SCALE: 3"=1'-0" 4511E024

DOOR HEAD • CMU 13
SCALE: 3"=1'-0" 4511E024

WINDOW HEAD 3
SCALE: 3"=1'-0" 4396E027

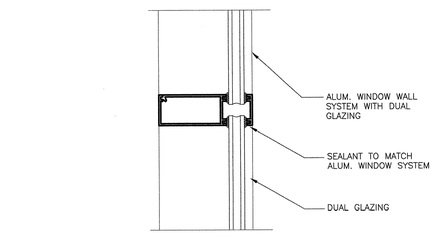

HORIZ. INTERMEDIATE MULLION 24
SCALE: 3"=1'-0" 4511E024

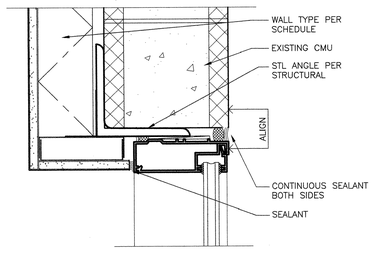

WINDOW HEAD • CMU INFILL 19
SCALE: 3"=1'-0" 4511E024

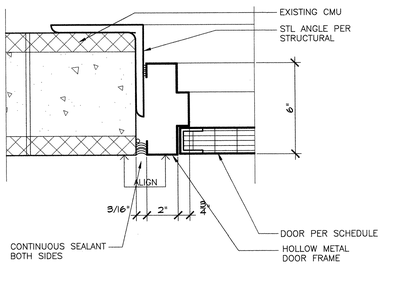

DOOR JAMB • CMU 14
SCALE: 3"=1'-0" 4511E024

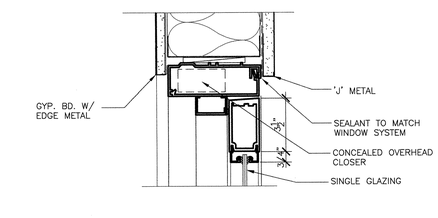

DOOR HEAD 9
SCALE: 3" = 1'-0" 4511E028

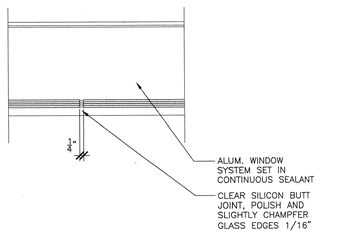

WINDOW BUTT JOINT 4
SCALE: 3"=1'-0" 4396E027

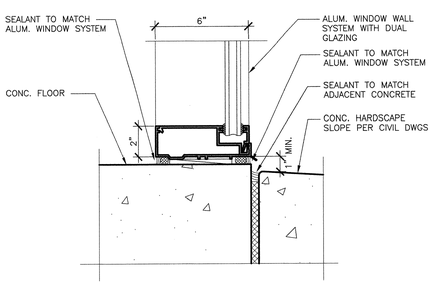

WINDOW SILL 25
SCALE: 3"=1'-0" 4511E024

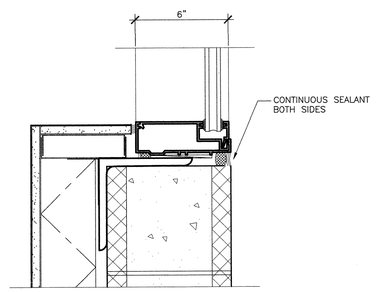

WINDOW SILL • CMU INFILL 20
SCALE: 3"=1'-0" 4511E024

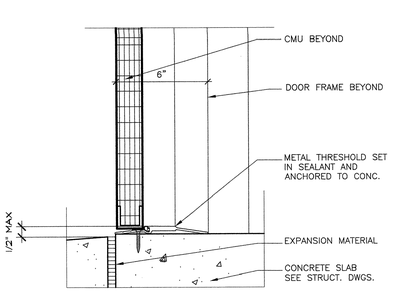

DOOR SILL • CMU 15
SCALE: 3"=1'-0" 4511E024

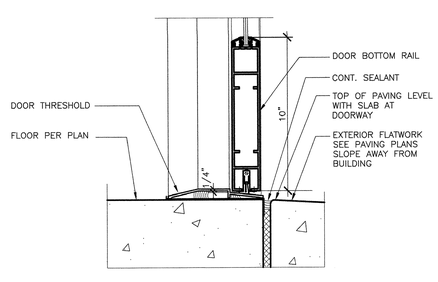

DOOR SILL 10
SCALE: 3"=1'-0" 4511E028

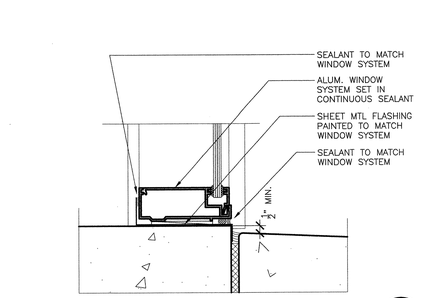

WINDOW SILL 5
SCALE: 3"=1'-0" 4396E027

ARCHITECTURE
INTERIOR DESIGN
PLANNING

CARRIER JOHNSON

GORDON R. CARRIER AIA
MICHAEL C. JOHNSON AIA

WILLIAM C. BOCKEN AIA
DEBORAH P. ELLIOTT IIDA

2600 MICHELSON DRIVE
SUITE 400
IRVINE, CALIFORNIA
92612

TEL 949 955-2353
FAX 949 955-2377

1301 THIRD AVENUE
SAN DIEGO, CALIFORNIA
92101

TEL 619 239-2353
FAX 619 239-6227

RECORD DOCUMENTS
THESE DOCUMENTS RELEASED BY CARRIER JOHNSON FOR USE AS RECORD DOCUMENTS REFLECT MINOR CHANGES IN LOCATION OF THE WORK AND SIGNIFICANT CHANGES MADE DURING THE CONSTRUCTION PROCESS, AND ARE BASED ON MARKUPS AND OTHER INFORMATION FURNISHED BY CONTRACTOR AND OTHER PARTIES WHICH WILL BE ASSUMED RELIABLE. CARRIER JOHNSON CANNOT AND DOES NOT WARRANT THE CONSTRUCTION AND ACCURACY OF ANY INFORMATION AND SHALL NOT BE RESPONSIBLE FOR ANY ERRORS OR OMISSIONS WHICH MAY BE INCORPORATED THEREIN AS A RESULT. RECORD DOCUMENTS SHALL NOT INCLUDE FIELD CONFIRMATION OF EXISTING CONDITIONS.

ONTARIO PD:: HEADQUARTERS
2534 S. ARCHIBALD AVE., ONTARIO, CALIFORNIA 91761

Field Order #13 07.01.03
5 Addendum 5 04.21.2003
3 Addendum 3
2 Addendum 2/Bldg. Dept. Re-Submittal 03.20.2003
Building Dept. Submittal 02.24.2003

ISSUES:
DIRECTORY/FILE NUMBER: 4511-A814

XREF'S DRAWINGS:

PROJECT NUMBER: 4511.00
DRAWN BY: CHECKED BY:
DATE:
SCALE: AS NOTED
TITLE: DETAILS

DRAWING NO: A8.1.4
2

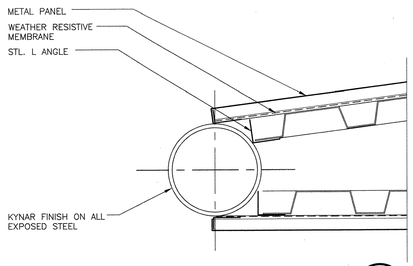

CANOPY BACK EDGE 21
SCALE: 3"=1'-0" 4511E025

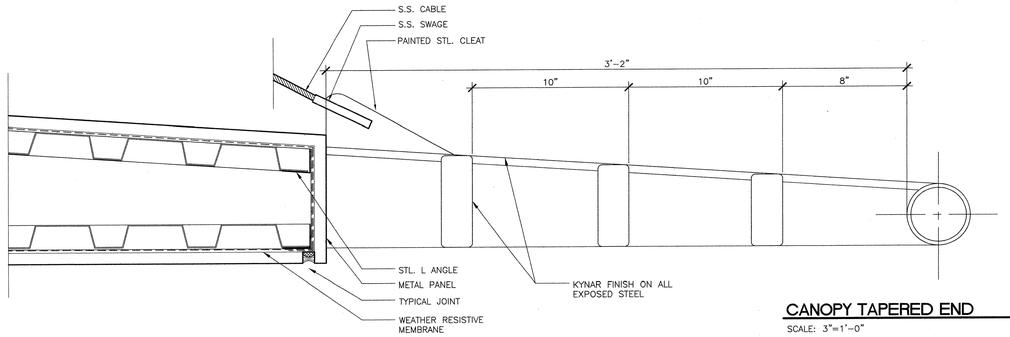

CANOPY TAPERED END 1
SCALE: 3"=1'-0" 4511E025

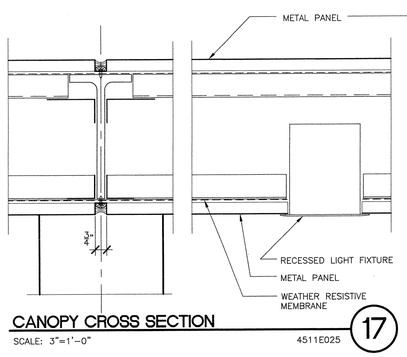

CANOPY CROSS SECTION 17
SCALE: 3"=1'-0" 4511E025

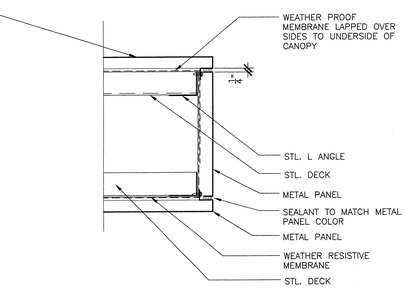

CANOPY END 12
SCALE: 3"=1'-0" 4511E025

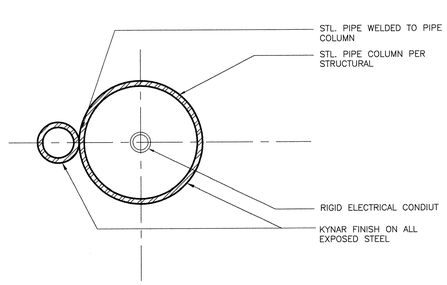

COLUMN PLAN 18
SCALE: 3"=1'-0" 4511E025

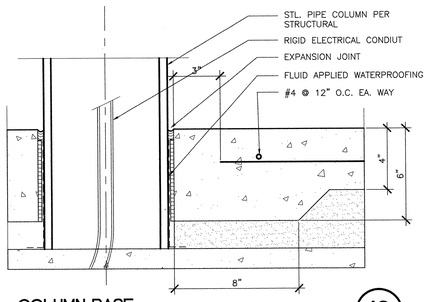

COLUMN BASE 19
SCALE: 3"=1'-0" 4511E025

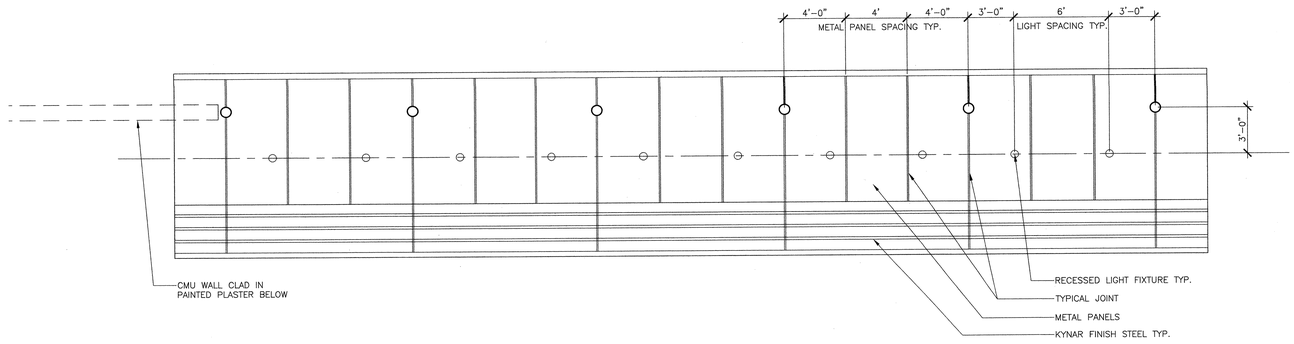

CANOPY REFLECTED CEILING PLAN 5
1/4"=1'-0"

N

ALL IDEAS, DESIGN, ARRANGEMENTS AND PLANS INDICATED OR REPRESENTED BY THIS DRAWING ARE OWNED BY, AND THE PROPERTY OF CARRIER JOHNSON, AND WERE CREATED, EVOLVED AND DEVELOPED FOR USE ON, AND IN CONNECTION WITH THIS PROJECT. NONE OF SUCH IDEAS, DESIGN, ARRANGEMENTS OR PLANS SHALL BE USED BY OR DISCLOSED TO ANY PERSON, FIRM OR CORPORATION FOR ANY PURPOSE WHATSOEVER WITHOUT THE PRIOR WRITTEN PERMISSION OF CARRIER JOHNSON. FILING THESE DRAWINGS OR SPECIFICATIONS WITH ANY PUBLIC AGENCY IS NOT A PUBLICATION OF SAME. NO COPYING, REPRODUCTION OR USE THEREOF IS PERMISSIBLE WITHOUT THE CONSENT OF CARRIER JOHNSON.

CARRIER JOHNSON

ARCHITECTURE
INTERIOR DESIGN
PLANNING

GORDON R. CARRIER AIA
MICHAEL C. JOHNSON AIA

WILLIAM C. ROCKEN AIA
DEBORAH P. ELLIOTT IIDA

2600 MICHELSON DRIVE
SUITE 400
IRVINE, CALIFORNIA
92612

TEL 949 955-2353
FAX 949 955-2377

1301 THIRD AVENUE
SAN DIEGO, CALIFORNIA
92101

TEL 619 239-2353
FAX 619 239-6227

RECORD DOCUMENTS
THESE DOCUMENTS RELEASED BY CARRIER JOHNSON FOR USE AS RECORD OF CONSTRUCTION HAVE BEEN ANNOTATED TO REFLECT CHANGES MADE DURING THE CONSTRUCTION PROCESS, AND ARE BASED ON UNVERIFIED INFORMATION PROVIDED BY THE CONTRACTOR AND OTHERS. THEREFORE, CARRIER JOHNSON MAKES NO EXPRESS OR IMPLIED WARRANTY AS TO THE ACCURACY AND/OR COMPLETENESS OF THE INFORMATION ANNOTATED HEREON. ADDITIONAL FIELD VERIFICATIONS AND/OR OMISSIONS WHICH MAY BE INCORPORATED THEREIN AS A RESULT. FUTURE CONSTRUCTION PLANNING MUST INCLUDE FIELD CONFIRMATION OF EXISTING CONDITIONS.

ONTARIO PD:: HEADQUARTERS

2534 S. ARCHIBALD AVE., ONTARIO, CALIFORNIA 91761

△F13 Field Order #13 07.01.03
△5 Addendum 5 04.21.2003
△3 Addendum 3
△2 Addendum 2/Bldg. Dept. Re-Submittal 03.20.2003
Building Dept. Submittal 02.24.2003

ISSUES:
DIRECTORY/FILE NUMBER: 4511-A815
XREF'S DRAWINGS:
PROJECT NUMBER: 4511.00
DRAWN BY: CHECKED BY:
DATE:
SCALE: AS NOTED
TITLE: DETAILS

DRAWING NO: A8.1.5
2

DOOR AND FRAME SCHEDULE

NUMBER	DOOR SIZE	DOOR TYPE	DOOR MATERIAL	DOOR FINISH	FRAME MATERIAL	FRAME FINISH	FIRE RATING (IN MINUTES)	HARDWARE GROUP	ELECTRICAL	REMARKS
FIRST FLOOR DOORS 1100 - 1703D										
ST01A	3'-0" X 8'-0"	F1	AL	CLEAR ANO.	AL	CLEAR ANO.	–	12	–	5, 6 PANIC DEVICE
1100	3'-0" X 8-0" PR	H	AL	CLEAR ANO.	AL	CLEAR ANO.	–	36	–	SLIDING
1101	3'-0" X 7'-0"	A1	HM	PT	HM	PT	20	15	CR	2, 3, 5, 6, 7
1102	3'-0" X 7'-0"	A	SC	ST	HM	PT	–	1	–	3, 5, 7
1103	3'-0" X 7'-0"	A	SC	PT	AL	CLEAR ANO.	–	6A	–	2, 3
1104	3'-0" X 7'-0"	A	SC	ST	HM	PT	–	1	–	3, 5, 7
F6 1105	3'-0" X 8'-0" PR	C1	SC	ST	HM	PT	20	20 SIM.	CR & BUZZ	3, 5, 6, 7 PANIC DEVICE
1106	3'-0" X 8'-0"	A	SC	ST	HM	PT	–	14	BUZZ	3, 7, 9
F6 1107	3'-0" X 8'-0" PR	C1	SC	ST	HM	PT	20	20 SIM.	CR & BUZZ	3, 5, 6, 7 PANIC DEVICE
1108	3'-0" X 8'-0"	A	SC	ST	HM	PT	–	4A	–	3, 7
1109	3'-0" X 8'-0"	A	SC	ST	HM	PT	–	4A	–	3, 7
1111	3'-0" X 8'-0"	A	SC	ST	HM	PT	–	4A	–	3, 7 F6
1112A	3'-0" X 8'-0" PR	G	AL	CLEAR ANO.	AL	CLEAR ANO.	–	33	–	– PANIC DEVICE
1112B	8'-0" X 8'-0" PR	G	AL	CLEAR ANO.	AL	CLEAR ANO.	–	34	–	5, 6, SPECIAL SIZE PANIC DEVICE 3'-0", LEAF AND 5'-0", LEAF
1114	3'-0" X 7'-0"	A	SC	PT	AL	CLEAR ANO.	–	6A	–	2, 3
1202A	3'-0" X 8'-0" PR	C	SC	ST	HM	PT	60	22	–	3, 7 PANIC DEVICE
1202B	3'-0" X 8'-0" PR	G	AL	CLEAR ANO.	AL	CLEAR ANO.	–	35	–	5, 6 PANIC DEVICE
1202C	3'-0" X 8'-0" PR	G	AL	CLEAR ANO.	AL	CLEAR ANO.	–	35	–	5, 6 PANIC DEVICE
1203A	3'-0" X 8'-0"	A1	SC	ST	HM	PT	60	18	CR	3, 5, 6, 7 PANIC DEVICE
E1203B	3'-0" X EXIST PR	E	HM	PT	EX	EX	–	23	–	2, 3, 11 PANIC DEVICE
1204	3'-0" X 8'-0"	D1	SC	ST	HM	PT	20	4	–	3, 5, 6, 7
1205	3'-0" X 8'-0"	A	SC	ST	AL	CLEAR ANO.	–	26	–	–
1206	3'-0" X 8'-0"	A	SC	ST	AL	CLEAR ANO.	–	27	–	–
1207	3'-0" X 8'-0"	A	SC	ST	AL	CLEAR ANO.	–	26	–	–
1208	3'-0" X 8'-0"	A	SC	ST	AL	CLEAR ANO.	–	27	–	–
1209	3'-0" X 7'-0" PR	C	HM	PT	HM	PT	–	23	–	2, 3, 5, 6 PANIC DEVICE
1301	3'-0" X 8'-0"	A1	SC	ST	HM	PT	20	4	–	3, 5, 6, 7
1302A	3'-0" X 8'-0"	D1	SC	ST	HM	PT	20	4	–	3, 5, 6, 7
1302B	3'-0" X 7'-0"	A	SC	ST	AL	CLEAR ANO.	–	25	–	–
1304	3'-0" X 7'-0"	D	SC	ST	AL	CLEAR ANO.	–	25	–	–
1306	3'-0" X 7'-0"	D	SC	ST	AL	CLEAR ANO.	–	25	–	–
1309	3'-0" X 7'-0"	A	SC	ST	AL	CLEAR ANO.	–	27	–	–
1311	3'-0" X 7'-0"	A	SC	ST	AL	CLEAR ANO.	–	27	–	–
1312	3'-0" X 7'-0"	A	SC	ST	AL	CLEAR ANO.	–	26	–	–
1313	3'-0" X 7'-0"	A	SC	ST	AL	CLEAR ANO.	–	25	–	–
F6 1401	3'-0" X 8'-0" PR	E1	SC	PT	HM	PT	20	30A	–	4, 7
F6 1402A	3'-0" X 8'-0" PR	E1	SC	PT	HM	PT	20	30A	–	4, 7
F6 1402B	3'-0" X 8'-0" PR	E1	SC	PT	HM	PT	20	30A	–	4, 7
F6 1402C	3'-0" X 8'-0" PR	E1	SC	PT	HM	PT	20	30A	–	4, 7
1403	3'-0" X 8'-0"	D1	SC	ST	HM	PT	20	4	–	3, 5, 6, 7
1404	3'-0" X 7'-0"	D	SC	ST	AL	CLEAR ANO.	–	25	–	–
1405	3'-0" X 7'-0"	A	SC	ST	AL	CLEAR ANO.	–	25	–	–
1406	3'-0" X 7'-0"	A	SC	PT	AL	CLEAR ANO.	–	27	–	–
1408	3'-0" X 7'-0"	A	SC	ST	AL	CLEAR ANO.	–	25	–	–
1501A	3'-0" X 8'-0"	A1	SC	PT	HM	PT	20	6	–	4, 7
F6 1501B	3'-0" X 8'-0" PR	E1	SC	PT	HM	PT	20	30A	–	4, 7
1502	3'-0" X 8'-0"	A1	SC	ST	HM	PT	20	4B	–	3, 5, 6, 7
1503	3'-0" X 7'-0"	D	SC	ST	AL	CLEAR ANO.	–	25	–	–
1504	3'-0" X 7'-0"	D	SC	ST	AL	CLEAR ANO.	–	25	–	–
1505	3'-0" X 7'-0"	D	SC	ST	AL	CLEAR ANO.	–	25	–	–
1506	3'-0" X 7'-0"	D	SC	ST	AL	CLEAR ANO.	–	25	–	–
1509	3'-0" X 7'-0"	D	SC	ST	AL	CLEAR ANO.	–	25	–	–
1511	3'-0" X 7'-0"	A1	SC	ST	HM	PT	20	4	–	3, 5, 6, 7
1512	3'-0" X 7'-0"	D	SC	ST	AL	CLEAR ANO.	–	25	–	–
1513A	3'-0" X 7'-0"	A	SC	ST	AL	CLEAR ANO.	–	25	–	3
1513B	3'-0" X 7'-0"	A	SC	ST	HM	PT	20	4	–	3
1515A	3'-0" X 7'-0"	D	SC	ST	AL	CLEAR ANO.	–	2A	–	4
1515B	3'-0" X 7'-0"	D	SC	ST	AL	CLEAR ANO.	–	2A	–	4
1603	3'-0" X 7'-0"	A1	SC	PT	HM	PT	20	6	–	3, 5, 6, 7
1605	3'-0" X 7'-0"	A1	SC	ST	HM	PT	20	1	–	3, 5, 6, 7
1606	3'-0" X 7'-0"	A1	SC	ST	HM	PT	20	1	–	3, 5, 6, 7
1607	3'-0" X 8'-0"	D1	SC	ST	HM	PT	20	4	–	4, 5, 6, 7
1608	3'-0" X 8'-0"	D1	SC	ST	HM	PT	20	4	–	4, 5, 6, 7
1609	3'-0" X 8'-0"	D1	SC	ST	HM	PT	20	4	–	4, 5, 6, 7
1611	3'-0" X 8'-0"	D1	SC	ST	HM	PT	20	4	–	4, 5, 6, 7
1613A	3'-0" X 8'-0"	D1	SC	ST	HM	PT	20	11A	–	3, 5, 6, 7 PANIC DEVICE
1613B	3'-0" X 8'-0"	D1	SC	ST	HM	PT	20	11A	–	3, 5, 6, 7 PANIC DEVICE
1614	3'-0" X 7'-0"	A	SC	PT	AL	CLEAR ANO.	–	27	–	3
1615	3'-0" X 7'-0"	A1	SC	PT	HM	PT	20	6	–	3, 5, 6, 7
1702A	3'-0" X 8'-0"	A2	HM/GL	PT	HM	PT	20	32	–	5, 6, 7
1702B	3'-0" X 8'-0"	A2	HM/GL	PT	HM	PT	20	32	–	5, 6, 7
1703A	3'-0" X 8'-0"	D1	SC	ST	HM	PT	20	11A	–	3, 5, 6, 7 PANIC DEVICE
1703B	3'-0" X 8'-0" PR	G	AL	CLEAR ANO.	AL	CLEAR ANO.	–	31A	–	3
1703C	3'-0" X 8'-0" PR	G	AL	CLEAR ANO.	AL	CLEAR ANO.	–	31A	–	3
1703D	3'-0" X 8'-0"	D1	SC	ST	HM	PT	20	11A	–	3, 5, 6, 7 PANIC DEVICE

DOOR AND FRAME SCHEDULE

NUMBER	DOOR SIZE	DOOR TYPE	DOOR MATERIAL	DOOR FINISH	FRAME MATERIAL	FRAME FINISH	FIRE RATING (IN MINUTES)	HARDWARE GROUP	ELECTRICAL	REMARKS
FIRST FLOOR DOORS 1706 - 2319A										
1706	3'-0" X 8'-0"	D1	SC	ST	HM	PT	20	4	–	3, 5, 6, 7
1709	3'-0" X 7'-0"	D	SC	ST	AL	CLEAR ANO.	–	25	–	–
1711A	3'-0" X 7'-0"	A	SC	ST	AL	CLEAR ANO.	–	25	–	3
1711B	3'-0" X 8'-0"	A1	SC	ST	HM	PT	20	4	–	3, 5, 6, 7
1712	3'-0" X 7'-0"	D	SC	ST	AL	CLEAR ANO.	–	25	–	–
1713	3'-0" X 7'-0"	D	SC	ST	AL	CLEAR ANO.	–	25	–	–
1714	3'-0" X 7'-0"	D	SC	ST	AL	CLEAR ANO.	–	25	–	–
1715	3'-0" X 7'-0"	D	SC	ST	AL	CLEAR ANO.	–	25	–	–
1802	3'-0" X 8'-0"	A1	SC	ST	HM	PT	20	4	–	3, 5, 6, 7
1803	3'-0" X 7'-0"	D	SC	ST	AL	CLEAR ANO.	–	25	–	–
1804	3'-0" X 7'-0"	A	SC	ST	AL	CLEAR ANO.	–	25	–	3
1807	3'-0" X 7'-0"	D	SC	ST	HM	PT	–	14 SIM.	CR & BUZZ	3, 7, 9 F6
1808	3'-0" X 7'-0"	D	SC	ST	AL	CLEAR ANO.	–	25	–	–
1809	3'-0" X 8'-0"	D1	SC	ST	HM	PT	20	4	–	3, 5, 6, 7
1811A	3'-0" X 8'-0"	D1	SC	ST	HM	PT	20	4	–	3, 5, 6, 7
1811B	3'-0" X 8'-0"	D1	SC	ST	HM	PT	20	4	–	3, 5, 6, 7
1812	3'-0" X 7'-0"	A	SC	PT	AL	CLEAR ANO.	–	25	–	3
1813	3'-0" X 8'-0"	A1	SC	ST	HM	PT	20	4	–	3, 5, 6, 7
1814	3'-0" X 8'-0"	A1	SC	ST	HM	PT	20	4	–	3, 5, 6, 7
1815	3'-0" X 7'-0"	A	SC	ST	HM	PT	–	25	–	3, 7
1816	3'-0" X 7'-0"	B1	SC	ST	HM	PT	20	4	–	3, 5, 6, 7
1817A	3'-0" X 7'-0"	A	SC	ST	HM	PT	–	14	BUZZ	3, 7, 9
1817B	3'-0" X 7'-0"	A	SC	ST	HM	PT	–	25	–	3, 7
1818	3'-0" X 7'-0"	B1	SC	ST	HM	PT	20	4	–	3, 5, 6, 7
1819	3'-0" X 8'-0"	D1	SC	ST	HM	PT	20	4	–	3, 5, 6, 7
1821	3'-0" X 8'-0"	A1	SC	ST	HM	PT	20	4	–	3, 5, 6, 7
1824	3'-0" X 7'-0"	D	SC	ST	AL	CLEAR ANO.	–	25	–	– F10
1825	3'-0" X 7'-0"	D	SC	ST	AL	CLEAR ANO.	–	25	–	–
1901	3'-0" X 8'-0" PR	G	AL	CLEAR ANO.	AL	CLEAR ANO.	–	37	CR	5, 6 PANIC DEVICE
1902	3'-0" X 8'-0"	A1	SC	PT	HM	PT	20	6	–	3, 5, 6, 7
1904	3'-0" X 7'-0"	A	SC	ST	AL	CLEAR ANO.	–	25	–	3
1905	3'-0" X 8'-0"	D1	SC	ST	HM	PT	20	4	–	3, 5, 6, 7
1908	3'-0" X 7'-0"	A	SC	PT	AL	CLEAR ANO.	–	27	–	3
E1909	EXISTING OPENING	A1	SC	ST	EX	EX	20	5	–	2, 3, 11
E1911	EXISTING OPENING	A1	SC	ST	EX	EX	60	5	–	1, 2, 3, 6, 8, 11
1912	3'-0" X 7'-0"	A	SC	ST	AL	CLEAR ANO.	–	25	–	3
1913	3'-0" X 7'-0"	A	SC	ST	AL	CLEAR ANO.	–	25	–	3
2102	3'-0" X 8'-0"	A1	SC	ST	HM	PT	20	4	–	3, 5, 6, 7
2109	3'-0" X 7'-0"	D	SC	ST	AL	CLEAR ANO.	–	25	–	–
2111	3'-0" X 7'-0"	D	SC	ST	AL	CLEAR ANO.	–	25	–	–
2112	3'-0" X 7'-0"	D	SC	ST	AL	CLEAR ANO.	–	25	–	–
2113	3'-0" X 7'-0"	D	SC	ST	AL	CLEAR ANO.	–	25	–	–
2114	3'-0" X 7'-0"	A	SC	ST	AL	CLEAR ANO.	–	25	–	–
2115	3'-0" X 7'-0"	D	SC	ST	AL	CLEAR ANO.	–	25	–	4
2117A	3'-0" X 7'-0"	D	SC	ST	AL	CLEAR ANO.	–	25	–	3
2117B	3'-0" X 8'-0"	A1	SC	ST	HM	PT	20	4	–	3, 5, 6, 7
2118	3'-0" X 7'-0"	D	SC	ST	AL	CLEAR ANO.	–	25	–	–
2119	3'-0" X 7'-0"	D	SC	ST	AL	CLEAR ANO.	–	25	–	–
2121	3'-0" X 7'-0"	D	SC	ST	AL	CLEAR ANO.	–	25	–	3
2123	3'-0" X 7'-0"	D	SC	ST	AL	CLEAR ANO.	–	25	–	3
2126	3'-0" X 7'-0"	A	SC	ST	AL	CLEAR ANO.	–	25	–	3
2127	3'-0" X 7'-0"	A	SC	PT	AL	CLEAR ANO.	–	26	–	3
2129	3'-0" X 7'-0"	A	SC	ST	–	CLEAR ANO.	–	1A	–	3, 5, MATCH JAMBS W/ OPENING E2131
2130	3'-0" X 7'-0"	A	SC	PT	AL	CLEAR ANO.	–	6A	–	2, 3
E2131	EXISTING OPENING	A	SC	PT	EX	EX	–	27	–	3, 11
2132	3'-0" X 7'-0"	A	SC	ST	–	CLEAR ANO.	–	1A	–	3, 5, MATCH JAMBS W/ OPENING E2131
2201A	3'-0" X 8'-0"	A1	SC	PT	HM	PT	20	4	–	3, 5, 6, 7
2201B	3'-0" X 8'-0"	A1	SC	ST	HM	PT	20	4		3, 5, 6, 7
2201C	3'-0" X 7'-0" PR	E	SC	PT	HM	PT	–	29A	–	3, 7
2202A	3'-0" X 8'-0"	A1	SC	ST	HM	PT	20	4	–	3, 5, 6, 7
2202B	3'-0" X 8'-0"	A1	SC	ST	HM	PT	20	4	–	3, 5, 6, 7
2302	3'-0" X 8'-0" PR	E2	SC	ST	HM	PT	20	29	–	3, 5, 6, 7
2303	3'-0" X 7'-0"	D	SC	ST	AL	CLEAR ANO.	–	25	–	4
2304	3'-0" X 7'-0"	D	SC	ST	AL	CLEAR ANO.	–	25	–	–
2305	3'-0" X 7'-0"	D	SC	ST	AL	CLEAR ANO.	–	25	–	–
2306	3'-0" X 7'-0"	D	SC	ST	AL	CLEAR ANO.	–	25	–	–
2307	3'-0" X 7'-0"	D	SC	ST	AL	CLEAR ANO.	–	25	–	–
2308	3'-0" X 7'-0"	D	SC	ST	AL	CLEAR ANO.	–	25	–	–
2309	3'-0" X 7'-0"	D	SC	ST	AL	CLEAR ANO.	–	25	–	–
2311	3'-0" X 7'-0"	D	SC	ST	AL	CLEAR ANO.	–	25	–	–
2314	3'-0" X 8'-0"	D1	SC	ST	HM	PT	20	4	–	3, 5, 6, 7
2315A	3'-0" X 7'-0"	D	SC	ST	AL	CLEAR ANO.	–	25	–	4
2315B	3'-0" X 8'-0"	D1	SC	ST	HM	PT	20	4	–	3, 5, 6, 7
2316	3'-0" X 7'-0"	D	SC	ST	AL	CLEAR ANO.	–	25	–	–
2319A	3'-0" X 8'-0"	A2	HM/GL	CLEAR PT. ANO.	HM	PT	20	32	–	5, 6, 7
2319B	3'-0" X 7'-0"	F	AL	CLEAR ANO.	AL	CLEAR ANO.	–	32B	–	5, 6

DOOR AND FRAME SCHEDULE

NUMBER	DOOR SIZE	DOOR TYPE	DOOR MATERIAL	DOOR FINISH	FRAME MATERIAL	FRAME FINISH	FIRE RATING (IN MINUTES)	HARDWARE GROUP	ELECTRICAL	REMARKS
FIRST FLOOR DOORS 2319B - E4102										
2321	3'-0" X 7'-0"	A	SC	ST	AL	CLEAR ANO.	–	3	–	3, 5
2323A	3'-0" X 7'-0"	D	SC	ST	AL	CLEAR ANO.	–	25	–	–
2323B	3'-0" X 7'-0"	A	SC	ST	AL	CLEAR ANO.	–	25	–	–
2401	3'-0" X 7'-0"	A1	SC	ST	HM	PT	20	4	–	3, 5, 6, 7
2402A	3'-0" X 7'-0"	A	SC	ST	AL	CLEAR ANO.	–	25	–	–
2402B	3'-0" X 7'-0"	D1	SC	ST	HM	PT	20	4	–	3, 5, 6, 7
2403	3'-0" X 7'-0"	A	SC	ST	AL	CLEAR ANO.	–	25	–	–
2501A	3'-0" X 7'-0"	A1	SC	PT	HM	PT	20	4	–	3, 5, 6, 7
2501B	3'-0" X 7'-0"	A1	SC	PT	HM	PT	20	4	–	3, 5, 6, 7
2502	3'-0" X 7'-0"	A1	SC	PT	HM	PT	20	6	–	3, 5, 6, 7
2603	3'-0" X 7'-0"	A1	SC	ST	HM	PT	20	10	–	3, 5, 6, 7
2604	3'-0" X 7'-0"	A	SC	ST	AL	CLEAR ANO.	–	24	–	3
2607	3'-0" X 7'-0"	A1	SC	ST	HM	PT	20	10	–	3, 5, 6, 7
2702A	3'-0" X 7'-0"	A1	SC	ST	HM	PT	20	10	–	3, 5, 6, 7
2702B	3'-0" X 7'-0"	A1	SC	ST	HM	PT	20	10	–	3, 5, 6, 7
2703	3'-0" X 7'-0" PR	E1	SC	PT	HM	PT	20	30	–	3, 5, 6, 7
E2801	3'-0" X EXIST PR	C	HM	PT	EX	EX	–	17	CR	2, 3, 5, 6, 8, 11 PANIC DEVICE F10
2802	3'-0" X 7'-0"	A1	SC	ST	HM	PT	20	15	CR	3, 5, 6, 7
2802B	3'-0" X 7'-0"	D	SC	ST	AL	CLEAR ANO.	–	25A	–	3
2803	3'-0" X 7'-0"	D	SC	ST	AL	CLEAR ANO.	–	25	–	–
2804	3'-0" X 7'-0"	D	SC	ST	AL	CLEAR ANO.	–	25	–	3
2805	3'-0" X 7'-0"	D	SC	ST	AL	CLEAR ANO.	–	25	–	3
2806	3'-0" X 7'-0"	A	SC	PT	AL	CLEAR ANO.	–	26	–	3
E2808	3'-0" X EXIST	EX	EX	EX	EX	EX	–	11	–	2, 3, 7, EXIT ONLY HARDWARE F15
2809	3'-0" X 7'-0"	A	HM	PT	HM	PT	–	26	–	3, 7
2811	3'-0" X 7'-0"	A	HM	PT	HM	PT	–	2A	–	3, 7
E2812A	3'-0" X EXIST	EX	EX	EX	EX	EX	–	17	CR	2, 3, 7 F10
E2812B	ROLL-UP	J1	EX	EX	EX	EX	–	38	–	
E2812C	ROLL-UP	J1	EX	EX	EX	EX	–	38	–	
E2812D	ROLL-UP	J1	EX	EX	EX	EX	–	38	–	
E2812E	3'-0" X 7'-0"	B	HM	PT	HM	PT	–	15A	CR	2, 3, 5, 6, 8
E2813	3'-0" X EXIST	EX	EX	EX	EX	EX	60	5A	–	1, 2, 3, 6, 8, 11
2813A	3'-0" X 7'-0"	A	HM	PT	HM	PT	–	9	–	1, 2, 3, 6, 8, 11 F9R
2818	3'-0" X 7'-0"	A	SC	ST	AL	CLEAR ANO.	–	25A	–	3
E2901A	3'-0" X 7'-0"	EX	EX	EX	EX	EX	20	4	–	2, 3, 5, 6, 8
E2901B	3'-0" X 7'-0"	EX	EX	EX	EX	EX	–	8A	–	2, 3, 5, 6, 8
E2901C	ROLL-UP	J1	EX	EX	EX	EX	–	38	–	2
E2902	EXISTING GATE	EX	EX	EX	EX	EX	–	–	–	2, PATCH & REPAIR AS NECCESSARY
3101	3'-0" X 7'-0"	D1	SC	ST	HM	PT	20	4	–	3, 5, 6, 7
3102	3'-0" X 7'-0"	A	SC	PT	AL	CLEAR ANO.	–	27	–	3
3103	3'-0" X 7'-0"	A	SC	PT	AL	CLEAR ANO.	–	27	–	3
3104	3'-0" X 7'-0"	D	SC	ST	AL	CLEAR ANO.	–	25	–	–
3105	3'-0" X 7'-0"	D	SC	ST	AL	CLEAR ANO.	–	25	–	–
3106	3'-0" X 7'-0"	D	SC	ST	AL	CLEAR ANO.	–	25	–	–
3107	3'-0" X 7'-0"	D	SC	ST	AL	CLEAR ANO.	–	25	–	–
3109	3'-0" X 7'-0"	D1	SC	ST	HM	PT	20	4	–	3, 5, 6, 7
3202	3'-0" X 7'-0"	A1	SC	ST	HM	PT	20	7	–	3, 5, 6, 7
3203	3'-0" X 7'-0"	D1	SC	ST	HM	PT	20	4	–	3, 5, 6, 7
3205	3'-0" X 7'-0"	B1	SC	ST	HM	PT	20	15	CR	3, 5, 6, 7
3206	3'-0" X 7'-0"	D1	SC	ST	HM	PT	20	4C	–	4, 5, 6, 7
3207	3'-0" X 7'-0"	D1	SC	ST	HM	PT	20	4C	–	4, 5, 6, 7
3208	3'-0" X 7'-0"	D1	SC	ST	HM	PT	20	4C	–	4, 5, 6, 7
3209A	3'-0" X 7'-0"	A1	SC	PT	HM	PT	20	4	–	3, 5, 6, 7
3209B	3'-0" X 7'-0"	A1	SC	PT	HM	PT	20	4	–	3, 5, 6, 7
3213	3'-0" X 7'-0"	A1	HM	PT	HM	PT	60	5		1, 3, 6, 7
3301	3'-0" X 7'-0"	A1	SC	ST	HM	PT	20	4	–	3, 5, 6, 7
3302	3'-0" X 7'-0"	A	SC	PT	AL	CLEAR ANO.	–	27A	–	3
3303A	3'-0" X 7'-0"	A1	SC	PT	HM	PT	20	4	–	3, 5, 6, 7
E3303B	ROLL-UP	J1	EX	EX	EX	EX	–	38	–	2
E3304	3'-0" X EXIST	A	HM	PT	EX	EX	–	9	–	1, 2, 3, 6, 8
3305	3'-0" X 7'-0"	A	HM	PT	HM	PT	–	9	–	1, 2, 3, 6
3401A	3'-0" X 7'-0"	A	HM	PT	HM	PT	–	7A	–	3, 7
3401B	3'-0" X 7'-0"	A	HM	PT	HM	PT	–	7A	–	3, 7
E3401C	ROLL-UP	J1	EX	EX	EX	EX	–	38	–	2
E3401D	3'-0" X EXIST	A	HM	PT	EX	EX	–	13	–	2, 3, 11
3402	3'-0" X 7'-0"	A	HM	PT	HM	PT	–	16	CR(F)	3, 7
3403	3'-0" X 7'-0"	A	HM	PT	HM	PT	–	26	–	3, 7
3404	3'-0" X 7'-0"	A	HM	PT	HM	PT	–	24	–	3, 7
3407	3'-0" X 7'-0"	A	HM	PT	HM	PT	–	3	–	3, 5, 7
E3408	3'-0" X EXIST PR	E	HM	PT	EX	EX	–	31	–	2, 3, 11
3502	3'-0" X 7'-0"	A1	SC	ST	HM	PT	20	10	–	3, 5, 6, 7 PANIC DEVICE
3508	3'-0" X 7'-0" PR	C	HM	PT	HM	PT	–	23	–	2, 3, 5, 6 PANIC DEVICE
3507A	3'-0" X 7'-0"	A1	SC	ST	HM	PT	20	10	–	3, 5, 6, 7 PANIC DEVICE
3507B	3'-0" X 7'-0"	A	SC	ST	HM	PT	–	10A	–	3, 7 PANIC DEVICE
3509A	3'-0" X 7'-0"	A1	SC	PT	HM	PT	20	6	–	3, 5, 6, 7
3509B	3'-0" X 7'-0"	A	SC	PT	HM	PT	–	6A	–	3, 7
E4102	3'-0" X EXIST PR	C	HM	PT	EX	EX	–	23A	–	2, 3, 5, 6, 8, 11 PANIC DEVICE

DOOR TYPES

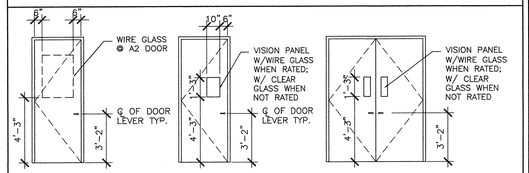

A
A1 : FIRE RATED DOOR
A2 : VISION GLASS DOOR

B
B1 : FIRE RATED DOOR
B2 : FIRE RATED DOOR W/ BALLISTIC BLAZING LAMINATED TO WIRE GLASS. VISION LITE SIZE TO BE 10"X10"

C
C1 : FIRE RATED DOOR

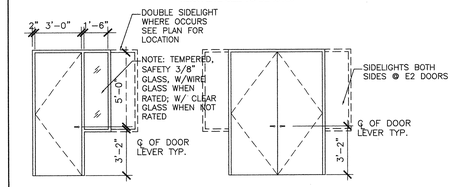

D
D1 : FIRE RATED DOOR

E
E1 : FIRE RATED DOOR
E2 : WITH SIDELIGHTS EACH SIDE.

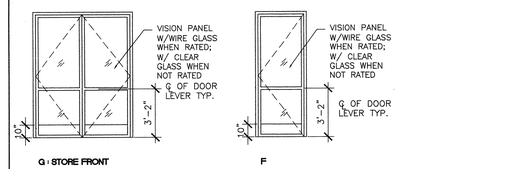

G : STORE FRONT

F

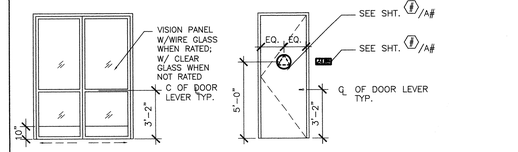

H

ROOM + TOILET SIGN LOCATION

DOOR AND FRAME ABBREVIATIONS

AL	=	ALUMINUM
ANO	=	ANODIZED
CR	=	CARD READER
EX	=	EXISTING
G	=	GLASS
HM	=	HOLLOW METAL
MDF	=	MEDIUM DENSITY-PAINT GRADE
PT	=	PAINT
PR	=	PAIR
SC	=	SOLID CORE WOOD; BIRCH
SS	=	STAINLESS STEEL
ST	=	WEYERHAEUSER; AUTUMN
T	=	TEMPERED
WG	=	WIRE GLASS
KP	=	KEYPAD

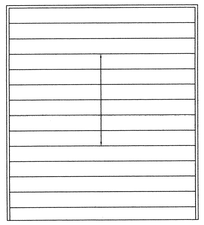

J ROLL-UP DOOR – NEW
J1 EXISTING ROLL-UP DOOR REPAIR, RETROFIT, PAINT AS NECESSARY TO OPERATING CONDITION.

REMARKS

1. PROVIDE CLOSER AND AUTOMATIC DOOR BOTTOM WITH SMOKE SEAL.
2. PAINT DOOR/HOLLOW METAL FRAME TO MATCH ADJACENT SURFACE; SEMI GLOSS FINISH.
3. PROVIDE 10" KICK PLATE ON BOTH SIDES OF DOOR/S.
4. PROVIDE 10" KICK PLATE ON ENTRY SIDE OF DOOR/S.
5. PROVIDE OVERHEAD CLOSER.
6. PROVIDE SMOKE SEAL/GASKET TOP AND BOTH SIDES.
7. PAINT HOLLOW METAL FRAME TO MATCH ALUM. CLEAR ANODIZED.
8. VERIFY EXISTING RATING, REPLACE DOOR AND FRAME TO MEET SPECIFIED RATING.
9. PUSH BUTTON RELEASE TO ACTIVATE DOOR. CONTROL POINT AT RECORDS COUNTER, SEE PLAN FOR SPECIFIC LOCATION.
10. KEYPAD TO ACTIVATE DOOR.
11. PROVIDE NEW DOOR IN EXISTING OPENING. CONTRACTOR TO PATCH AND REPAIR JAMBS AS NECESSARY TO ACCEPT NEW DOOR AND HARDWARE. REPLACE JAMBS IF DETERMINED THAT JAMBS ARE DAMAGED BEYOND REPAIR. CONTRACTOR V.I.F.

GENERAL NOTES

1. FRAMES TO BE WESTERN INTEGRATED MODEL #400, CLEAR ANODIZED ALUMINUM FINISH. REFER TO PLAN FOR WALL TYPES AND FIELD VERIFY EXISTING CONDITIONS FOR ALL WALL THICKNESS TO DETERMINE THROAT SIZE.
2. FURNISH HEAVY-DUTY MORTISE LOCKSETS IN STAINLESS STEEL FINISH AT EXTERIOR AND CORRIDOR DOORS AND HEAVY-DUTY CYLINDRICAL LOCKSETS IN SATIN CHROME FINISH AT INTERIOR OFFICE DOORS, AS SCHEDULED IN HARDWARE SPECIFICATION 08710.
3. VERIFY WIDTH OF SIDELIGHTS AND DOOR/WINDOW FRAME THROAT SIZES IN FIELD PRIOR TO PLAC

ALL IDEAS, DESIGN, ARRANGEMENTS AND PLANS INDICATED OR REPRESENTED BY THIS DRAWING ARE OWNED BY, AND THE PROPERTY OF CARRIER JOHNSON AND WERE CREATED, EVOLVED AND DEVELOPED FOR USE ON, AND IN CONNECTION WITH THIS PROJECT. NONE OF SUCH IDEAS, DESIGN, ARRANGEMENTS, OR PLANS SHALL BE USED BY, OR DISCLOSED TO ANY PERSON, FIRM, OR CORPORATION FOR ANY PURPOSE WHATSOEVER WITHOUT THE WRITTEN PERMISSION OF CARRIER JOHNSON. FILING THESE DRAWINGS OR SPECIFICATIONS WITH ANY PUBLIC AGENCY IS NOT A PUBLICATION OF SAME. NO COPYING, REPRODUCTION OR USE THEREOF IS PERMISSIBLE WITHOUT THE CONSENT OF CARRIER JOHNSON.

DOOR AND FRAME SCHEDULE

NUMBER	DOOR SIZE	DOOR TYPE	DOOR MATERIAL	DOOR FINISH	FRAME MATERIAL	FRAME FINISH	FIRE RATING (IN MINUTES)	HARDWARE GROUP	ELECTRICAL	REMARKS
FIRST FLOOR: DOORS 4103 - 4619										
4103	3'-0" X 7'-0"	D1	SC	ST	HM	PT	20	4C	–	4, 5, 6, 7
4104	3'-0" X 7'-0"	D1	SC	ST	HM	PT	20	4C	–	4, 5, 6, 7
4105A	3'-0" X 7'-0"	D1	SC	ST	HM	PT	20	4	–	3, 5, 6, 7
4105B	3'-0" X 7'-0"	A	SC	ST	AL	CLEAR ANO.	–	2A	–	3
4108	3'-0" X 7'-0"	D1	SC	ST	HM	PT	20	4	–	3, 5, 6, 7
4109	3'-0" X 7'-0"	D	SC	ST	AL	CLEAR ANO.	–	25	–	–
4111	3'-0" X 7'-0"	D	SC	ST	AL	CLEAR ANO.	–	25	–	–
4112	3'-0" X 7'-0"	D	SC	ST	AL	CLEAR ANO.	–	25	–	–
4113	3'-0" X 7'-0"	D	SC	ST	AL	CLEAR ANO.	–	25	–	–
(F13) 4114A	3'-0" X 8'-0" PR	E1	SC	PT	HM	PT	20	30A	–	4, 7
(F13) 4114B	3'-0" X 8'-0" PR	E1	SC	PT	HM	PT	20	30A	–	4, 7
(F13) 4114C	3'-0" X 8'-0" PR	E1	SC	PT	HM	PT	20	30A	–	4, 7
(F13) 4114D	3'-0" X 8'-0" PR	E1	SC	PT	HM	PT	20	30A	–	4, 7
(F13) 4114E	3'-0" X 8'-0" PR	E1	SC	PT	HM	PT	20	30A	–	4, 7
4201	3'-0" X 7'-0" PR	C	HM	PT	HM	PT	–	23A	–	2, 3, 5, 6 PANIC DEVICE
4202	3'-0" X 7'-0"	A1	SC	ST	HM	PT	~~20~~	4C	–	3, 5, 6, 7
4203	3'-0" X 7'-0"	A1	SC	ST	HM	PT	20	4C	–	3, 5, 6, 7
4204	3'-0" X 7'-0"	A1	SC	ST	HM	PT	20	3A	–	3, 5, 6, 7
(F13) 4205	3'-0" X 7'-0"	A2	SC	ST	HM	PT	20	4	–	3, 5, 6, 7
4206	3'-0" X 7'-0"	A	SC	PT	AL	CLEAR ANO.	–	26	–	3
4207	3'-0" X 7'-0"	A	SC	PT	AL	CLEAR ANO.		27		3
4208	3'-0" X 7'-0"	B	HM	PT	HM	PT	–	8	–	2, 3
4209	3'-0" X 7'-0"	A	HM	PT	HM	PT	–	2	–	3, 7
4211	3'-0" X 7'-0"	A	HM	PT	HM	PT	–	3B	–	2, 3, 5
4212A	3'-0" X 7'-0"	A	HM	PT	HM	PT	–	3B	–	2, 3, 5
4212B	3'-0" X 7'-0"	A	HM	PT	HM	PT	–	5	–	2, 3
4301A	3'-0" X 7'-0"	B2	HM	PT	HM	PT	90	15	CR	3, 7
E4308B	3'-0" X EXISTING	A	HM	PT	EX	EX	–	8A	–	2, 3, 11
E4308C	ROLL-UP	J1	EX	EX	EX	EX	–	38	–	2
4323B	3'-0" X 7'-0"	B2	HM	PT	HM	PT	90	40	CR	2, 3
4326B	3'-0" X 7'-0"	B2	HM	PT	HM	PT	90	40	CR	2, 3
4401A	3'-0" X 7'-0"	B	HM	PT	HM	PT	–	40	CR	2, 3
4401B	12'-0" X 15'-0"	J	HM	PT	HM	PT	–	38	–	2
4401C	12'-0" X 15'-0"	J	HM	PT	HM	PT	–	38	–	2
4401D	3'-0" X 7'-0"	B	HM	PT	HM	PT	–	41	–	2, 3
4502	3'-0" X 7'-0"	D	SC	ST	AL	CLEAR ANO.	–	4A	–	~~3~~, 5, 6, 7
4503A	3'-0" X 7'-0"	D1	SC	ST	HM	PT	20	4C	–	
4503B	3'-0" X 7'-0"	D1	HM	PT	HM	PT	–	25	–	2, 3
E4505	ROLL-UP	J1	EX	EX	EX	EX		38	–	2, 3
4507A	3'-0" X 7'-0" PR	E	HM	PT	HM	PT	–	31A	–	3, 7
4507B	3'-0" X 7'-0"	A	HM	PT	HM	PT	–	4A	–	3, 7
E4507C	ROLL-UP	J1	EX	EX	EX	EX	–	38	–	2
E4507D	3'-0" X 7'-0"	A	HM	PT	EX	EX	–	8B	–	2, 3, 11
4508	3'-0" X 7'-0"	A	HM	PT	HM	PT	–	4A	–	3, 7
4509	3'-0" X 7'-0"	A	HM	PT	HM	PT	–	28	–	3, 5, 6, 7
4602	3'-0" X 7'-0"	D	SC	ST	HM	PT	20	4	–	3, 5, 6, 7
4604A	3'-0" X 7'-0"	E1	HM	PT	HM	PT	20	19	CR	3, 7
4604B	3'-0" X 7'-0"	A	HM	PT	HM	PT	20	11	–	2, 3, 5, 6
(F13) 4605	3'-0" X 7'-0"	C1	HM	PT	HM	PT	20	11A	–	3, 5, 6, 7 PANIC DEVICE
4606	3'-0" X 7'-0"	A1	HM	PT	HM	PT	20	42	–	3, 5, 6, 7
4608A	3'-0" X 7'-0"	A1	HM	PT	HM	PT	20	4	–	
4608B	3'-0" X 7'-0"	A	HM	PT	HM	PT	–	16A	CR	3, 5, 6, 7
4609	3'-0" X 7'-0"	A1	HM	PT	HM	PT	20	15	CR(F)	
4611	3'-0" X 7'-0"	A	HM	PT	HM	PT	–	4A	–	3, 7
4612	3'-0" X 7'-0"	E	HM	PT	HM	PT	–	21	CR	2, 3, 5, 6, 8
(F13) 4612A	3'-0" X 7'-0" PR	E	HM	PT	HM	PT	–	31A	–	2, 3
(F13) E4613	3'-0" X EXIST PR	C	HM	PT	HM	PT	–	23	–	11 PANIC DEVICE
4616	3'-0" X 7'-0"	A	HM	PT	HM	PT	–	7	–	3, 7
4617	3'-0" X 7'-0"	A	HM	PT	HM	PT	–	7	–	3, 7
4619	3'-0" X 7'-0"	A	HM	PT	HM	PT	–	28	–	3, 7

DOOR AND FRAME SCHEDULE

NUMBER	DOOR SIZE	DOOR TYPE	DOOR MATERIAL	DOOR FINISH	FRAME MATERIAL	FRAME FINISH	FIRE RATING (IN MINUTES)	HARDWARE GROUP	ELECTRICAL	REMARKS
SECOND FLOOR: DOORS 5001 - 5036										
ST01B	3'-0" X 7'-0"	A1	SC	ST	HM	PT	20	15B	CR	3, 5, 6, 7 PANIC DEVICE
ST03	3'-0" X 7'-0"	A1	SC	ST	HM	PT	20	11B	–	3, 5, 6, 7 PANIC DEVICE
(F13) 5001	3'-0" X 7'-0"	A2	SC	ST	HM	PT	–	16	CR	3, 7
5002	3'-0" X 7'-0"	A	SC	ST	AL	CLEAR ANO.	–	25B	–	–
5003	3'-0" X 7'-0"	A1	HM	PT	HM	PT	60	6	–	1, 3, 6, 7
5004	3'-0" X 7'-0"	A1	HM	PT	HM	PT	60	6	–	1, 3, 6, 7
5005	3'-0" X 7'-0"	D	SC	ST	HM	PT	–	25B	–	4, 7
5006	3'-0" X 7'-0"	D	SC	ST	HM	PT	–	25B	–	4, 7
5007	3'-0" X 7'-0"	D	SC	ST	HM	PT	–	25B	–	4, 7
5008	3'-0" X 7'-0"	D	SC	ST	HM	PT	–	2	–	3, 7
5009A	3'-0" X 7'-0"	A1	SC	ST	AL	CLEAR ANO.	20	5	–	5, 6
E5009B	EXISTING OPENING	EX	EX	EX	EX	EX	–	6	–	3, 5, 6, 7, 8, 11
5011	3'-0" X 7'-0"	D	SC	ST	HM	PT	–	4A	–	3, 7
5012	3'-0" X 7'-0"	D	SC	ST	HM	PT	–	4A	–	3, 7
5013	3'-0" X 7'-0"	A	SC	ST	AL	CLEAR ANO.	–	16B	CR	3, 10
5014A	3'-0" X 7'-0"	D	SC	ST	HM	PT	–	25B	–	3, 7
5014B	3'-0" X 7'-0"	A	SC	ST	AL	CLEAR ANO.	–	25B	–	3
5015	3'-0" X 7'-0"	D	SC	ST	HM	PT	–	25B	–	4, 7
5016	3'-0" X 7'-0"	D	SC	ST	HM	PT	–	25B	–	4, 7
5017	3'-0" X 7'-0"	D	SC	ST	HM	PT	–	25B	–	4, 7
5023	3'-0" X 7'-0"	A	SC	ST	HM	PT	–	10	–	3, 7
5024	3'-0" X 7'-0"	A	SC	ST	AL	CLEAR ANO.	–	3	–	4
5025	3'-0" X 7'-0"	A	SC	ST	AL	CLEAR ANO.	–	3	–	4
5026	3'-0" X 7'-0"	A	SC	PT	HM	PT	–	6	–	3, 7
5027	3'-0" X 7'-0"	A1	SC	ST	HM	PT	20	11B	–	3, 5, 6, 7 PANIC DEVICE
5028	3'-0" X 7'-0"	A	SC	ST	HM	PT	–	11B	–	3, 7 PANIC DEVICE
5031	3'-0" X 7'-0"	A	SC	ST	HM	PT	–	10B		3, 5, 7
5032	3'-0" X 7'-0"	A	SC	ST	AL	CLEAR ANO.	–	24	–	3, 5
5033	EXISTING OPENING	A	SC	PT	EX	EX	–	26A	–	3, 7, 11
5034	EXISTING OPENING	A	SC	PT	EX	EX	–	6A	–	3, 7, 11
5036	3'-0" X 7'-0"	A	SC	ST	HM	PT	–	10B	–	3, 5, 7

DOOR AND FRAME SCHEDULE

NUMBER	DOOR SIZE	DOOR TYPE	DOOR MATERIAL	DOOR FINISH	FRAME MATERIAL	FRAME FINISH	FIRE RATING (IN MINUTES)	HARDWARE GROUP	ELECTRICAL	REMARKS

DOOR TYPES

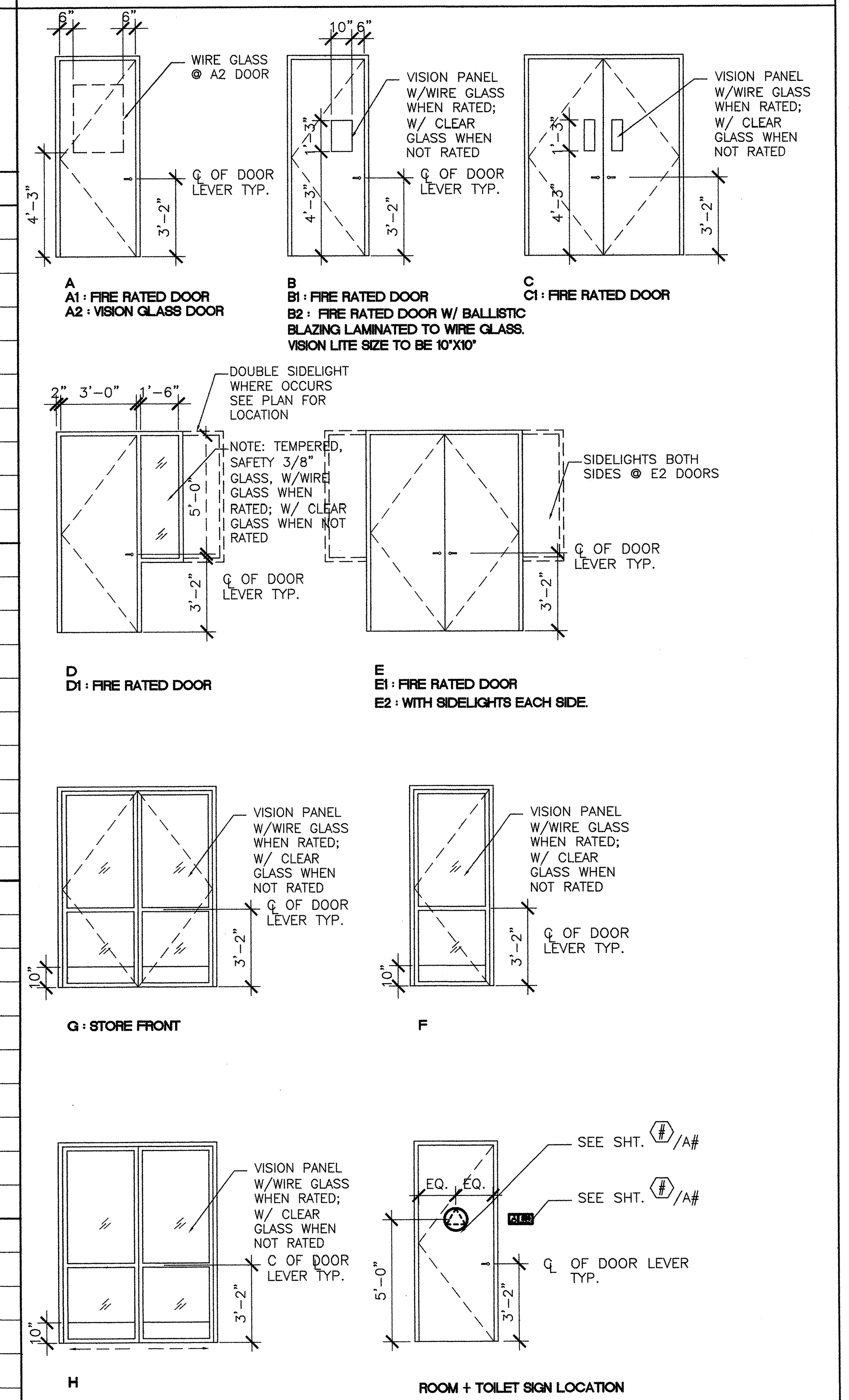

DOOR AND FRAME ABBREVIATIONS

AL = ALUMINUM
ANO = ANODIZED
CR = CARD READER
EX = EXISTING
G = GLASS
HM = HOLLOW METAL
MDF = MEDIUM DENSITY-PAINT GRADE
PT = PAINT
PR = PAIR
SC = SOLID CORE WOOD; BIRCH
SS = STAINLESS STEEL
ST = WEYERHAEUSER; AUTUMN
T = TEMPERED
WG = WIRE GLASS
KP = KEYPAD

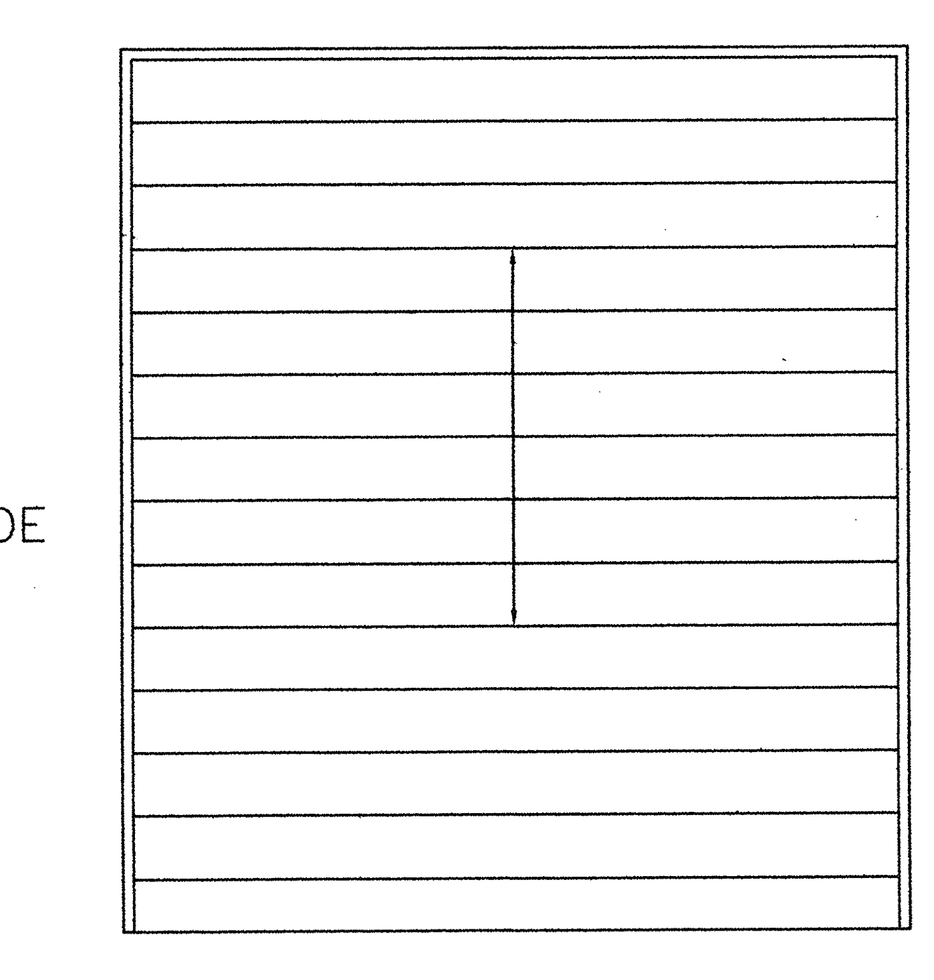

J: ROLL-UP DOOR – NEW
J1: EXISTING ROLL-UP DOOR REPAIR, RETROFIT, PAINT AS NECESSARY TO OPERATING CONDITION.

REMARKS

1. PROVIDE CLOSER AND AUTOMATIC DOOR BOTTOM WITH SMOKE SEAL.
2. PAINT DOOR/HOLLOW METAL FRAME TO MATCH ADJACENT SURFACE; SEMI GLOSS FINISH.
3. PROVIDE 10" KICK PLATE ON BOTH SIDES OF DOOR/S.
4. PROVIDE 10" KICK PLATE ON ENTRY SIDE OF DOOR/S.
5. PROVIDE OVERHEAD CLOSER.
6. PROVIDE SMOKE SEAL/GASKET TOP AND BOTH SIDES.
7. PAINT HOLLOW METAL FRAME TO MATCH ALUM. CLEAR ANODIZED.
8. VERIFY EXISTING RATING, REPLACE DOOR AND FRAME TO MEET SPECIFIED RATING.
9. PUSH BUTTON RELEASE TO ACTIVATE DOOR. CONTROL POINT AT RECORDS COUNTER, SEE PLAN FOR SPECIFIC LOCATION.
10. KEYPAD TO ACTIVATE DOOR.
11. PROVIDE NEW DOOR IN EXISTING OPENING. CONTRACTOR TO PATCH AND REPAIR JAMBS AS NECESSARY TO ACCEPT NEW DOOR AND HARDWARE. REPLACE JAMBS IF DETERMINED THAT JAMBS ARE DAMAGED BEYOND REPAIR. CONTRACTOR V.I.F.

GENERAL NOTES

1. FRAMES TO BE WESTERN INTEGRATED MODEL #400, CLEAR ANODIZED ALUMINUM FINISH. REFER TO PLAN FOR WALL TYPES AND FIELD VERIFY EXISTING CONDITIONS FOR ALL WALL THICKNESS TO DETERMINE THROAT SIZE.
2. FURNISH HEAVY-DUTY MORTISE LOCKSETS IN STAINLESS STEEL FINISH AT EXTERIOR AND CORRIDOR DOORS AND HEAVY-DUTY CYLINDRICAL LOCKSETS IN SATIN CHROME FINISH AT INTERIOR OFFICE DOORS, AS SCHEDULED IN HARDWARE SPECIFICATION 08710.
3. VERIFY WIDTH OF SIDELIGHTS AND DOOR/WINDOW FRAME THROAT SIZES IN FIELD PRIOR TO PLACING ORDER.
4. ALL OTHER DOOR HARDWARE & DEVICES SHALL BE SATIN/BRUSHED STAINLESS STEEL OR APPROVED EQUAL.
5. CONTRACTOR TO COORDINATE KEYING/CYLINDER SYSTEM WITH OWNER.
6. ALL ELECTRIFIED LOCK SETS FIGURED AS FAIL SAFE TYPE.
7. PROVIDE CARD READER, COORDINATE WITH ELECTRICAL.
8. PANIC HARDWARE TO ELECTRIFIED IF PAIRED WITH CARD READER.
9. ALL EXISTING DOOR/S TO BE PAINTED TO MATCH ADJACENT SURFACE. ALL EXISTING FRAMES TO BE PAINTED TO MATCH ALUMINUM-CLEAR ANODIZED.
10. CONTRACTOR TO VERIFY ALL EXISTING DOORS/FRAMES ARE OPERABLE; IF NEEDED REPAIR TO MAKE OPERABLE.
11. ALL PAINTED DOORS TO BE P-1, SEMI-GLOSS.
12. ALL PRIVATE OFFICES AND CONFERENCE ROOMS TO HAVE COAT HOOKS MOUNTED +54"AFF CENTER. COAT HOOK TO BE PETER PIPER PRODUCTS: MODEL 2078 AL POLISHED ALUMINUM.
13. PROVIDE DEDUCT ALTERNATE FOR ALL CORRIDOR DOORS TO BE 7'-0".

ARCHITECTURE
INTERIOR DESIGN
PLANNING

CARRIER JOHNSON

GORDON R. CARRIER AIA
MICHAEL C. JOHNSON AIA

WILLIAM C. BOCKEN AIA
DEBORAH P. ELLIOTT IIDA

2600 MICHELSON DRIVE
SUITE 400
IRVINE, CALIFORNIA
92612

TEL 949 955-2353
FAX 949 955-2377

1301 THIRD AVENUE
SAN DIEGO, CALIFORNIA
92101

TEL 619 239-2353
FAX 619 239-6227

RECORD DOCUMENTS
THESE DOCUMENTS RELEASED BY CARRIER JOHNSON FOR USE AS RECORD DOCUMENTS WILL SHOW THE REPORTED LOCATION OF THE WORK AND SIGNIFICANT CHANGES MADE DURING THE CONSTRUCTION PROCESS, AND ARE BASED ON UNVERIFIED INFORMATION PROVIDED BY THE CONTRACTOR AND OTHER PARTIES WHICH WILL BE ASSUMED RELIABLE. CARRIER JOHNSON CANNOT AND DOES NOT WARRANT THE ACCURACY AND/OR COMPLETENESS OF THIS INFORMATION AND SHALL NOT BE RESPONSIBLE FOR ANY ERRORS OR OMISSIONS WHICH MAY BE INCORPORATED THEREIN AS A RESULT. FUTURE CONSTRUCTION PLANNING MUST INCLUDE FIELD CONFIRMATION OF EXISTING CONDITIONS.

ONTARIO PD:: HEADQUARTERS
2534 S. ARCHIBALD AVE., ONTARIO, CALIFORNIA 91761

F13 Field Order #13 07.01.03
5 Addendum 5 04.21.2003
3 Addendum 3
2 Addendum 2/Bldg. Dept. Re-Submittal 03.20.2003
Building Dept. Submittal 02.24.2003
ISSUES:

DIRECTORY/FILE NUMBER: 4511–A902
XREF'S DRAWINGS:
PROJECT NUMBER: 4511.00
DRAWN BY:
CHECKED BY:
DATE: 2/24/03
SCALE: 1/4"=1'-0"
TITLE: SCHEDULES, DOORS, FRAMES, & DOOR TYPES
DRAWING NO: A9.0.2

5

ALL IDEAS, DESIGN, ARRANGEMENTS AND PLANS INDICATED OR REPRESENTED BY THIS DRAWING ARE OWNED BY, AND ARE THE PROPERTY OF CARRIER JOHNSON AND WERE CREATED, EVOLVED AND DEVELOPED FOR USE ON, AND IN CONNECTION WITH THIS PROJECT. NONE OF SUCH IDEAS, DESIGNS, ARRANGEMENTS OR PLANS SHALL BE USED BY OR DISCLOSED TO ANY PERSON, FIRM OR CORPORATION FOR ANY PURPOSE WHATSOEVER WITHOUT THE WRITTEN PERMISSION OF CARRIER JOHNSON. NO COPYING, REPRODUCTION OR USE THEREOF IS PERMISSIBLE WITHOUT THE CONSENT OF CARRIER JOHNSON. THE VISUAL CONTACT WITH THESE DRAWINGS OR SPECIFICATIONS SHALL CONSTITUTE PRIMA FACIE EVIDENCE OF ACCEPTANCE OF THESE RESTRICTIONS. THIS DRAWING IS NOT A PUBLICATION OF CARRIER JOHNSON.

GENERAL

1. THE CONTRACTOR SHALL VERIFY ALL DIMENSIONS AND SITE CONDITIONS AND COORDINATE ALL DETAILS AND DIMENSIONS SHOWN ON THE STRUCTURAL DRAWINGS WITH RELATED REQUIREMENTS ON ARCHITECTURAL, MECHANICAL, ELECTRICAL AND/OR CIVIL DRAWINGS. THE ARCHITECT OR ENGINEER SHALL BE NOTIFIED OF ANY DISCREPANCIES PRIOR TO STARTING WORK.
2. WHERE A CONFLICT OCCURS BETWEEN THE SPECIFICATIONS, NOTES ON THE DRAWINGS, GENERAL NOTES AND SPECIFIC DETAILS, THE MORE RESTRICTIVE SHALL GOVERN.
3. ALL MATERIAL AND WORKMANSHIP SHALL CONFORM TO THE UNIFORM BUILDING CODE, 1997 EDITION, WITH CALIFORNIA BUILDING CODE AMENDMENTS (UBC).
4. DO NOT SCALE DRAWINGS.
5. THE DESIGN, ADEQUACY AND SAFETY OF ERECTION BRACING, SHORING, TEMPORARY SUPPORTS, ETC., IS THE SOLE RESPONSIBILITY OF THE CONTRACTOR AND HAS NOT BEEN CONSIDERED BY THE STRUCTURAL ENGINEER. THE CONTRACTOR IS RESPONSIBLE FOR THE STABILITY OF THE STRUCTURE PRIOR TO THE APPLICATION OF ALL PERMANENT LATERAL BRACING, ROOF AND FLOOR DIAPHRAGMS AND FINISH MATERIALS. THE CONTRACTOR SHALL PROVIDE THE NECESSARY BRACING TO INSURE STABILITY PRIOR TO THE APPLICATION OF THE AFOREMENTIONED MATERIALS. OBSERVATION VISITS TO THE SITE BY THE STRUCTURAL ENGINEER SHALL NOT INCLUDE THE INSPECTION OF THE ABOVE ITEMS.
6. VIBRATIONAL EFFECTS OF MECHANICAL EQUIPMENT ARE ASSUMED TO BE NEGLIGIBLE TO STRUCTURAL MEMBERS, SEE MECHANICAL DRAWINGS FOR REQUIRED VIBRATION ISOLATORS.
7. IT SHALL BE THE RESPONSIBILITY OF THE CONTRACTOR TO LOCATE ALL EXISTING UTILITIES WHETHER SHOWN HEREON OR NOT, AND TO PROTECT THEM FROM DAMAGE. THE CONTRACTOR SHALL BEAR ALL EXPENSE OF REPAIR OR REPLACEMENT IN CONJUNCTION WITH THE PERFORMANCE OF THIS WORK.
8. DIMENSIONS AND LOCATIONS OF ALL DOOR AND WINDOW OPENINGS SHALL BE DICTATED BY THE ARCHITECTURAL DRAWINGS. FLOOR, WALL AND ROOF OPENINGS AS REQUIRED BY OTHER TRADES SHALL BE VERIFIED FROM SHOP DRAWINGS, EQUIPMENT DATA, ETC.
9. ITEMS IDENTIFIED BY A TRADE NAME ARE INDICATIVE OF A LEVEL OF PERFORMANCE OR A GRADE OF MATERIAL. IN ALL SUCH CASES, THE PHRASE "OR APPROVED EQUAL" SHALL APPLY.
10. BACKFILL SHALL NOT BE PLACED AGAINST WALLS BEFORE FLOORS OR FRAMING SUPPORTING THE WALLS AT THE BOTTOM AND TOP ARE SECURELY IN PLACE EXCEPT AS SPECIFICALLY STATED IN WRITING BY THE STRUCTURAL ENGINEER.
11. PIPES, CONDUIT, DUCTS, ETC., SHALL NOT BE EMBEDDED INSIDE STRUCTURAL MEMBERS UNLESS SHOWN ON THE DRAWINGS OR PERMITTED IN WRITING BY THE STRUCTURAL ENGINEER.
12. DESIGN LIVE LOADS:

    ROOF LOAD:

    LIVE LOAD = 20 PSF (FLAT)
    16 PSF (SLOPE)

    FLOOR LOAD:

    CORRIDORS, STAIRS, & EXITS = 100 PSF

    MECH. EQUIPMENT ROOMS = 125 PSF

    STORAGE = 125 PSF

    ALL OTHER AREAS = 50 PSF

13. LATERAL LOADS:

    WIND LOAD:

    p = Ce Cq qs I
    Ce = 1.58 Cq = 1.30 qs = 20.8 I = 1.00
    P = 33 PSF

    SEISMIC LOAD:

    SOIL PROFILE TYPE :
    SEISMIC SOURCE TYPE :
    Na = 1.40 Nv = 1.60
    Ca = 0.40 Cv = 0.40
    Z = 0.40 I = 1.00
    R = 5.6 /4.5
    V = 0.260 W (FRAMES)
    0.320 W (SHEARWALLS)

SOILS AND FOUNDATION

1. ALL FOOTINGS AND SLABS SHALL BE FOUNDED ON FIRM UNDISTURBED NATURAL SOILS OR PROPERLY COMPACTED FILL.
2. LOCATE THE BOTTOM OF ALL EXTERIOR FOOTINGS A MINIMUM OF 18" BELOW LOWEST ADJACENT FINAL GRADE UNLESS OTHERWISE NOTED.
3. LOCATE THE BOTTOM OF ALL INTERIOR FOOTINGS A MINIMUM OF 18" BELOW TOP OF FINISH CONCRETE SLAB UNLESS OTHERWISE NOTED
4. ALL COMPACTED FILL SHALL HAVE A MINIMUM DENSITY OF 90% OF THE MAXIMUM OBTAINABLE IN ACCORDANCE WITH ASTM D1557 OR IN ACCORDANCE WITH THE SOILS REPORT.
5. THE FOUNDATION DESIGN IS BASED UPON UBC, CHAPTER 18
6. THE ALLOWABLE DESIGN VALUES ARE AS FOLLOWS:
   A. VERTICAL BEARING PRESSURE = 1000PSF
   B. LATERAL PASSIVE PRESSURE = 250 PCF
   C. COEFFICIENT OF FRICTION = 0.30
   D. LATERAL ACTIVE PRESSURE OF RETAINED EARTH = 38 PCF
7. A GEOTECHNICAL ENGINEER SHALL INSPECT AND APPROVE ALL EXCAVATIONS PRIOR TO PLACING REINFORCING AND/OR CONCRETE.

SUBGRADE PREPARATION

1. ALL FILL AND BACKFILL SHALL BE COMPACTED TO AT LEAST 90 PERCENT OF MAXIMUM DRY DENSITY AS DETERMINED BY ASTM D1557, METHOD A OR C.
2. PRIOR TO THE PLACEMENT OF PROPERLY COMPACTED STRUCTURAL FILL, THE EXPOSED GROUND SURFACE (EXCAVATION BOTTOM) SHALL BE SCARIFIED TO A MINIMUM DEPTH OF 12" PROPERLY MOISTURE CONDITIONED AND RECOMPACTED TO AT LEAST 90 PERCENT OF MAXIMUM DRY DENSITY AS DETERMINED IN ACCORDANCE WITH ASTM TEST PROCEDURE D1557. FILL SHALL THEN BE PLACED AND COMPACTED IN LAYERS OF 8" MAXIMUM THICKNESS UNTIL FINAL ELEVATIONS ARE ATTAINED.
3. SUBGRADE PREPARATION SHALL BE INSPECTED AND APPROVED BY A GEOTECHNICAL ENGINEER.

CONCRETE SLAB-ON-GRADE

1. CONCRETE SLAB-ON-GRADE SHALL HAVE A MINIMUM ACTUAL THICKNESS OF 4 INCHES. THE SLAB SHALL BE UNDERLAIN BY 2" OF SAND OVER A 6 MIL VISQUEEN MOISTURE BARRIER OVER 2" OF SAND.
2. MINIMUM SLAB REINFORCEMENT SHALL CONSIST OF #3 BARS AT 18" ON CENTER EACH WAY. CARE SHALL BE TAKEN DURING THE PLACEMENT AND CURING OF CONCRETE FLATWORK TO REDUCE THE POTENTIAL FOR SHRINKAGE CRACKING. THE BARS SHALL BE POSITIONED AT MID-DEPTH OF THE SLAB.

REINFORCING STEEL

1. ALL REINFORCING STEEL SHALL CONFORM TO ASTM A615, GRADE 60. REINFORCING TO BE WELDED SHALL BE ASTM A706, GRADE 60.
2. LOW HYDROGEN WELDING RODS SHALL BE USED FOR ALL WELDING OF REINFORCING BARS.
3. CONTINUOUS REINFORCING SHALL BE SPLICED WITH 30 BAR DIAMETERS MINIMUM (COMPRESSION) IN CONCRETE AND MASONRY AND 48 BAR DIAMETERS MINIMUM (TENSION) IN CONCRETE AND MASONRY UNLESS NOTED OTHERWISE.
4. REINFORCING BARS SHALL NOT BE REBENT WITHOUT PRIOR WRITTEN APPROVAL OF STRUCTURAL ENGINEER.
5. REINFORCING SHALL BE SPLICED ONLY AS SHOWN OR NOTED. SPLICES AT OTHER LOCATIONS SHALL BE APPROVED BY THE STRUCTURAL ENGINEER.
6. SPLICES IN ADJACENT HORIZONTAL WALL REINFORCING BARS SHALL BE STAGGERED 4'-0" MINIMUM UNLESS OTHERWISE NOTED. PROVIDE DOWELS IN FOOTINGS AND/OR GRADE BEAMS THE SAME SIZE AND NUMBER AS VERTICAL WALL OR COLUMN REINFORCING. DOWELS SHALL HAVE A MINIMUM PROJECTION EQUAL TO STANDARD LAP SPLICE UNLESS OTHERWISE NOTED.
7. ALL REINFORCING, ANCHOR BOLTS AND OTHER INSERTS SHALL BE SECURED IN PLACE PRIOR TO PLACING CONCRETE OR GROUTING MASONRY.
8. WELDED WIRE FABRIC SHALL CONFORM TO ASTM A185.
9. MINIMUM CONCRETE COVER SHALL BE AS SPECIFIED IN ACI 318 LATEST EDITION.

   A. CONCRETE CAST AGAINST AND PERMANENTLY EXPOSED TO EARTH 3"

   B. CONCRETE EXPOSED TO EARTH OR WEATHER:

      NO. 6 THROUGH NO. 18 BAR 2"

      NO. 5 BAR, W31 OR D31 WIRE AND SMALLER 1 1/2"

   C. CONCRETE NOT EXPOSED TO WEATHER OR IN CONTACT WITH GROUND:

      SLAB, WALL, JOISTS:

      NO. 14 AND NO. 18 BAR 1 1/2"

      NO. 11 BAR AND SMALLER 3/4"

10. BARS WITH A CARBON EQUIVALENT ABOVE 0.75 SHALL NOT BE WELDED. WELDING SHALL NOT BE DONE ON OR WITHIN TWO BAR DIAMETERS OF ANY PORTION OF A BAR THAT HAS BEEN BENT COLD.

CONCRETE

1. CEMENT SHALL CONFORM TO ASTM C150, TYPE V. WATER TO CEMENT RATIO SHALL NOT EXCEED 0.50 UNLESS NOTED OTHERWISE.
2. CONCRETE USES, TYPES, AND 28 DAY ULTIMATE COMPRESSIVE STRENGTHS ARE AS FOLLOWS:

USE	TYPE	28-DAY STRENGTH
FOUNDATIONS	HARDROCK	3,000 PSI
SLAB ON GRADE	HARDROCK	3,000 PSI
STRUCTURAL SLABS	HARDROCK	3,000 PSI
COLUMNS AND BEAMS	HARDROCK	3000PSI
FILL ON METAL DECK	LIGHTWEIGHT	3,000 PSI
OTHER	HARDROCK	3,000 PSI

3. HARDROCK AGGREGATE SHALL CONFORM TO ASTM C33.
4. APPROXIMATE AIR DRY DENSITY FOR HARDROCK CONCRETE SHALL BE 145 PCF.
5. LIGHTWEIGHT CONCRETE AGGREGATE SHALL CONFORM TO ASTM C330.
6. APPROXIMATE AIR DRY DENSITY FOR LIGHTWEIGHT CONCRETE SHALL NOT EXCEED 110 PCF.
7. ALL CONCRETE OF COMPRESSIVE STRENGTH GREATER THAN 2500 PSI SHALL HAVE CONTINUOUS INSPECTION BY A REGISTERED DEPUTY INSPECTOR APPROVED BY THE BUILDING DEPARTMENT.
8. STRIPPING OF FORMS AND SHORING SHALL BE IN STRICT ACCORDANCE WITH ACI 318, LATEST EDITION.
9. REFER TO MECHANICAL AND ELECTRICAL DRAWINGS FOR LOCATIONS OF ALL PIPES, CONDUITS, ETC.
10. CONCRETE EXPANSION ANCHORS SHALL BE HILTI KWIK-BOLT II EXPANSION ANCHORS (ICBO #4627).
11. CONCRETE SLEEVE ANCHORS SHALL BE HILTI DROP-IN ANCHORS (ICBO #2895).

STRUCTURAL STEEL

1. STRUCTURAL STEEL SHALL CONFORM TO STANDARD SPECIFICATIONS FOR STRUCTURAL STEEL FOR BRIDGES AND BUILDINGS ASTM A992, GRADE 50 UNLESS OTHERWISE NOTED.
2. FABRICATION AND ERECTION SHALL COMPLY WITH THE LATEST AISC SPECIFICATIONS.
3. ALL BOLTS FOR STEEL MEMBERS SHALL CONFORM TO ASTM A307 UNLESS OTEHRWISE NOTED.
4. PIPE COLUMNS SHALL CONFORM TO ASTM A53, GRADE B, TYPE E OR S.
5. ALL TUBE STEEL SHALL CONFORM TO ASTM A500, GRADE B.
6. WELDING SHALL BE BY THE ELECTRIC SHIELDED ARC PROCESS PERFORMED BY A CERTIFIED WELDER.
7. ALL FIELD WELDING AND HIGH STRENGTH BOLTING SHALL HAVE CONTINUOUS INSPECTION BY A REGISTERED DEPUTY INSPECTOR APPROVED BY THE BUILDING DEPARTMENT.
8. WELDING SHALL CONFORM TO AWS D1.1. USE E70XX ELECTRODES.
9. ALL GROOVE WELDS SHALL BE FULL PENETRATION UNLESS NOTED OTHERWISE.
10. AUTOMATIC END WELDED STUDS SHALL BE NELSON GRANULAR FLUX-FILLED SHEAR CONNECTORS OR ANCHORED STUDS. (ICBO #2614)

METAL STUDS

1. PROVIDE METAL STUDS AND/OR JOISTS AND ACCESSORIES AS MANUFACTURED BY CEMCO, AS INDICATED ON THE DRAWINGS, AS SPECIFIED HERIN AND AS NEEDED FOR A COMPLETE AND PROPER INSTALLATION.
2. COMPLY WITH PERTINENT RECOMMENDATIONS CONTAINED IN SPECIFICATIONS FOR METAL LATHING AND FURRING PUBLISHED BY THE METAL LATH/STEEL FRAMING ASSOCIATION.
3. STUDS SHALL BE FABRICATED FROM MILL CERTIFIED "PRIME STEEL" NO. 16 AND 14 GAUGE HOT ROLLED STEEL SHALL COMPLY WITH ASTM A570 OR ASTM A653 GRADE 50, NO. 16 AND 14 GAUGE GALVANIZED STUDS SHALL COMPLY WITH ASTM A653 GRADE 50 AND GALVANIZED SPECIFICATION ASTM A924, ALL SHALL HAVE A MINIMUM YIELD POINT OF 50 KSI.
4. NO. 18 GAUGE AND BELOW COLD-ROLLED SHALL COMPLY WITH ASTM A653 GRADE 33, ASTM 611 GRADE C, AND GRADE 33. 20 GAUGE A611 GRADE C. NO 18 AND 20 GAUGE GALVANIZED SHALL COMPLY WITH ASTM A653 GRADE 33 AND GALVANIZED SPECIFICATION ASTM A924, ALL SHALL HAVE A MINIMUM YIELD POINT OF 33 KSI.
5. LIGHT GAUGE STEEL FRAMING SECTIONS COMPLY WITH ASTM C645 (NON-LOAD BEARING WITH MINIMUM COATING) AND ASTM C955 (LOAD BEARING WITH G-60 MINIMUM COATING.
6. METAL STUDS SHALL BE CEMCO, TYPE CS WITH 1 5/8-INCH FLANGE & 9/16-INCH RETURN UNLESS NOTED OTHERWISE.

TYPE	Ix(IN4)	Sx(IN3)	A(IN2)	
600CS16	2.914	0.971	0.344	
600CS18	2.357	0.786	0.289	
600CS20	1.827	0.586	0.192	
362CS18	0.721	0.398	0.289	
362CS20	0.561	0.296	0.196	
600XCS14	4.216	1.405	0.535	

7. METAL TRACKS SHALL BE CEMCO, TYPE DLT, OR EQUAL, MATCHING SIZE AND GUAGE OF STUDS, UNLESS NOTED OTHERWISE.

TYPE	Ix(IN4)	Sx(IN3)	A(IN2)	
600DLT14		3.059	0.898	0.484
600DLT16		2.348	0.675	0.322
600DLT18		1.875	0.537	0.219
362DLT14		0.946	0.437	0.453
362DLT16		0.721	0.323	0.319
362DLT18		0.577	0.257	0.219

8. METAL STUDS AND TRACKS SHALL BE CONNECTED WITH #10 SHEET METAL SCREWS UNLESS NOTED OTHERWISE.
9. ALL WELDING SHALL BE PERFORMED BY CERTIFIED LIGHT GAUGE WELDERS APPROVED BY THE BUILDING DEPARTMENT.

CONCRETE BLOCK MASONRY

1. CONCRETE MASONRY UNITS SHALL CONFORM TO ASTM C90 GRADE N-1 NORMAL WEIGHT.
2. PORTLAND CEMENT SHALL BE TYPE I AND SHALL CONFORM TO ASTM C150.
3. SAND AGGREGATES SHALL BE CLEAN, SHARP AND WELL GRADED, FREE FROM DETRIMENTAL AMOUNTS OF DUST, LUMPS, SHALE AND ALKALI, OR ORGANIC MATERIAL, CONFORMING TO ASTM C144 (MORTAR) AND C404 (GROUT).
4. SOLID GROUT ALL CELLS. CLEANOUTS ARE REQUIRED AT THE BOTTOM OF ALL GROUTED CELLS.
5. MORTAR SHALL BE FRESHLY PREPARED AND UNIFORMLY MIXED IN PROPORTIONS OF ONE-PART PORTLAND CEMENT, OVER ONE-QUARTER (1/4) TO ONE-HALF (1/2) MAXIMUM PART HYDRATED LIME AND THREE-AND-ONE-HALF (3 1/2) PARTS SAND. MORTAR SHALL BE TYPE "S" AND HAVE A MINIMUM COMPRESSIVE STRENGTH OF 2000 PSI AT 28 DAYS.
6. GROUT SHALL BE FRESHLY PREPARED AND UNIFORMLY MIXED, COMPOSED BY VOLUME OF ONE-PART PORTLAND CEMENT, TWO TO THREE PARTS SAND AND ONE TO TWO PARTS PEA GRAVEL TO WHICH SHALL BE ADDED NOT MORE THAN ONE-TENTH (1/10) PART HYDRATED LIME. SUFFICIENT WATER SHALL BE ADDED TO PRODUCE A CONSISTENCY FOR POURING WITHOUT SEGREGATION OF GROUT CONSTITUENTS. GROUT SHALL ATTAIN A MINIMUM COMPRESSIVE STRENGTH OF 2000 PSI AT 28 DAYS.
7. CONTINUOUS INSPECTION IS NOT REQUIRED UNLESS NOTED OTHERWISE.
8. THE MINIMUM ULTIMATE COMPRESSIVE STRENGTH OF THE MASONRY WALL ASSEMBLAGE AT 28 DAYS SHALL BE 1500 PSI. PRISM TESTS SHALL BE MADE IN ACCORDANCE WITH UBC, CHAPTER 21.

METAL DECK

1. METAL ROOF DECK AT PENTHOUSE ROOF SHALL BE TYPE B-36 AS MANUFACTURED BY ASCI. INC., OR EQUAL.
2. SEE ICBO REPORT #2757 FOR METAL DECK DATA.
3. ALL WELDING SHALL BE PERFORMED BY CERTIFIED LIGHT GAUGE WELDERS APPROVED BY THE BUILDING DEPARTMENT.
4. STUDS WELDED TO TOP FLANGES OF BEAMS AND GIRDERS SHALL BE AS MANUFACTURED BY TRW NELSON DIVISION OR EQUAL. (ICBO #2614)
5. ALL METAL DECK SHALL BE GALVANIZED.

STRUCTURAL TESTS & INSPECTIONS REQ'D. FOR THIS PROJECT

1. REFER TO CHAPTER 17 OF THE 1998 CALIFORNIA BUILDING CODE FOR AMPLIFICATION OF THE FOLLOWING REQUIREMENTS: ALL SPECIAL INSPECTORS MUST SUBMIT FINAL REPORTS TO THE CITY INSPECTOR, AND THE STRUCTURAL ENGINEER.

	NO ☐	YES ■
2. FOUNDATIONS:		
A. COMPACTED FILL INCLUDING UTILITY TRENCHES		■
B. VISUAL EXAMINATION & APPROVAL OF ALL FOUNDATION EXCAVATIONS		■
C. EXPANSION INDEX EVALUATION OF PAD	☐	
D. DRILLING OF CAISSONS	☐	
3. CONCRETE:		
A. CONTINUOUS INSPECTION & TEST CYLINDERS FOR CONCRETE OVER 2500 PSI		■
B. PNEUMATICALLY PLACED CONCRETE-GUNITE AND SHOTCRETE (TEST SPCIMANS, PLACING OF CONC.)	☐	
C. BOLTS & EMBEDDED PLATES INSTALLED IN CONCRETE (DURING INSTALLATION & PLACING OF CONC.)		■
4. REINFORCING STEEL:		
A. PLACING OF REINFORCING		■
B. PLACING & STRESSING OF TENDONS	☐	
C. SAMPLING & TESTING OF STEEL (MILL REPORTS & IDENTIFICATION OF STEEL)		■
5. WELDING:		
A. ALL STRUCTURAL FIELD WELDING (INCLUDES DECKING & WELDED STUDS)		■
B. NON-DESTRUCTIVE TESTING OF MOMENT RESISTING SPACE FRAMES	☐	
C. STRUCTURAL LIGHT GAGE METAL FRAMING	☐	
6. BOLTING:		
A. HIGH STRENGTH BOLTING	☐	
B. EXPANSION BOLTS IN CONCRETE OR MASONRY		■
C. INSTALLATION OF EPOXY OR GROUTED ANCHORED BOLTS, RODS, OR REBAR		■
7. MASONRY:		
A. SAMPLING & TESTING OF MASONRY		■
B. TESTING OF GROUT & MORTAR PRISMS		■
C. CONTINUOUS INSPECTION		■
D. COMPRESSION PRISMS	☐	
8. INSULATING CONCRETE FILL:		
TEST & INSPECTIONS	☐	
9. STRUCTURAL STEEL:		
A. MILL REPORTS & IDENTIFICATION OF STEEL (AFFIDAVIT OF COMPLIANCE)		■
B. SAMPLING & TESTING	☐	
10. APPROVED FABRICATORS: (MUST SUBMIT CERTIFICATION OF COMPLIANCE)		■
FOR ALL OFFSITE FABRICATION SUCH AS STRUCTURAL STEEL, GLU-LAMS, PRECAST CONCRETE, ETC.	☐	
11. PLYWOOD ROOF & WALL SHEATHING:		
INSPECTION OF PLYWOOD PLACEMENT. NAIL SIZE, SPACING, PENETRATION & EDGE DISTANCES	☐	

12. ALL TESTS & INSPECTIONS SHALL BE PERFORMED BY AN INDEPENDENT INSPECTION AGENCY EMPLOYED BY THE OWNER PRIOR TO THE COMMENCMENT OF WORK. JOB SITE VISITS BY THE STRUCTURAL ENGINEER DO NOT CONSTITUTE AN OFFICAL INSPECTION. COPIES OF TEST RESULTS SHALL BE FURNISHED TO THE CITY INSPECTOR AND THE STRUCTURAL ENGINEER IN ADDITION TO OTHER NORMAL DISTRIBUTIONS.

NOTE: IT IS THE CONTRACTORS SOLE RESPONSIBILITY TO SEE THAT THESE TESTS AND INSPECTIONS ARE PERFORMED.

S1.1 GENERAL NOTES AND SHEET INDEX
S1.2 TYPICAL DETAILS
S1.3 TYPICAL DETAILS
S1.4 TYPICAL DETAILS
S1.5 MISCELLANEOUS DETAILS
S1.6 MISCELLANEOUS DETAILS
S2.1 GROUND FLOOR/FOUNDATION PLAN
S2.2 ROOF FRAMING PLAN
S2.3 MEZZANINE FLOOR, ROOF FRAMING PLAN AND DETAILS
S2.4 PARTIAL FOUNDATION, ROOF FRAMING, FRAME ELEV. AND DETAILS
S3.1 EXISTING BEAM SCHEDULE AND DETAILS
S3.2 STEEL CANOPY AND DETAILS 2
S3.3 ELEVATIONS AND DETAILS

SHEET INDEX 4

DETAIL NUMBER-TYP.
SHEET NUMBER-TYP.
DETAIL REFERENCE
SECTION REFERENCE
WALL ELEVATION
SHEARWALL MARK
FOOTING PAD MARK
TOP OF ELEVATION +0'-0"
EQUIPMENT MARK
DATUM POINT
STEP FOOTING
GRID LINES
REVISION DELTA

SYMBOLS 2

20	16	12	8	4
19	15	11	7	3
18	14	10	6	2
17	13	9	5	1

NOTES:
DETAIL SPACE NUMBER ALWAYS REMAINS THE SAME. IF A DETAIL OCCUPIES MORE THAN ONE SPACE IT IS IDENTIFIED BY THE NUMBER FOR THE LOWER RIGHT SPACE. A DETAIL OCCUPYING SPACES 3, 4, 7, 8 WOULD BE NUMBERED 3.

DRAWING FORMAT 1

CARRIER JOHNSON
ARCHITECTURE
INTERIOR DESIGN
PLANNING
GORDON R. CARRIER AIA
MICHAEL C. JOHNSON AIA
WILLIAM C. BOCKEN AIA
DEBORAH P. ELLIOTT IIDA
2600 MICHELSON DRIVE
SUITE 400
IRVINE, CALIFORNIA
92612
TEL 949 955-2353
FAX 949 955-2377
1301 THIRD AVENUE
SAN DIEGO, CALIFORNIA
92101
TEL 619 239-2353
FAX 619 239-6227

REGISTERED PROFESSIONAL ENGINEER JAMES A. ROESSLER No. C 32466 Exp. 12-31-04 CIVIL STATE OF CALIFORNIA

rdg
ROESSLER DESIGN GROUP
4850 Barranca Parkway, Suite 209
Irvine, California 92604
(949) 651-8111

ONTARIO PD:: HEADQUARTERS
2534 S. ARCHIBALD AVE., ONTARIO, CALIFORNIA 91761

2 Addendum 2/Bldg. Dept. Re-Submittal 03.20.2003
Building Dept. Submittal 02.24.2003
ISSUES:

DIRECTORY/FILE NUMBER:
XREF'S DRAWINGS:
PROJECT NUMBER: 4511.00
DRAWN BY: CHECKED BY:
DATE:
SCALE: AS NOTED
TITLE: GENERAL NOTES AND SHEET INDEX
DRAWING NO: S1.1

ALL IDEAS, DESIGN, ARRANGEMENTS AND PLANS INDICATED OR REPRESENTED BY THIS DRAWING ARE OWNED BY, AND THE PROPERTY OF CARRIER JOHNSON, AND WERE CREATED, EVOLVED AND DEVELOPED FOR USE ON, AND IN CONNECTION WITH THE SPECIFIED PROJECT. NONE OF SUCH IDEAS, DESIGNS, ARRANGEMENTS OR PLANS SHALL BE USED BY OR DISCLOSED TO ANY PERSON, FIRM OR CORPORATION FOR ANY PURPOSE WHATSOEVER WITHOUT THE WRITTEN PERMISSION OF CARRIER JOHNSON. FILING THESE DRAWINGS OR SPECIFICATIONS WITH ANY PUBLIC AGENCY IS NOT A PUBLICATION OF SAME. NO COPYING, REPRODUCTION OR USE THEREOF IS PERMISSIBLE WITHOUT THE CONSENT OF CARRIER JOHNSON.

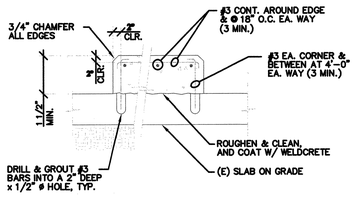

TYP. CONCRETE OVERLAY DETAIL | NONE | 20

MARK	PAD SIZE	REINFORCING EACH WAY U.N.O.
3	3'-0" x 3'-0" x 1'-0" D	4-#4
4	4'-0" x 4'-0" x 1'-0" D	5-#4
5	5'-0" x 5'-0" x 1'-6" D	6-#5
6	6'-0" x 6'-0" x 1'-6" D	7-#5
7	7'-0" x 7'-0" x 1'-6" D	8-#6

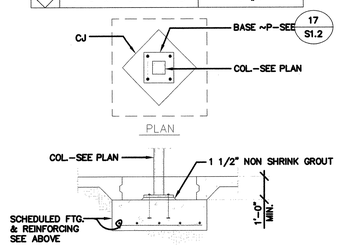

COL. FTG. DTL. AND SCHED. (2 KSF AND 1.5 KSF) | NONE | 19

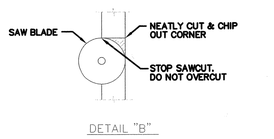

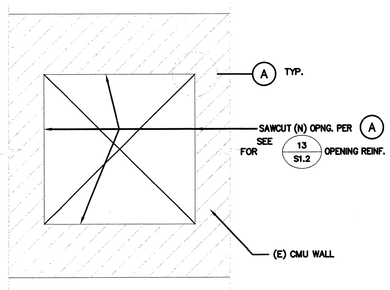

TYP. (N) OPNG. SAW CUT DET. IN (E) MASONRY WALL | NONE | 15

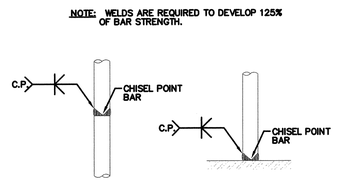

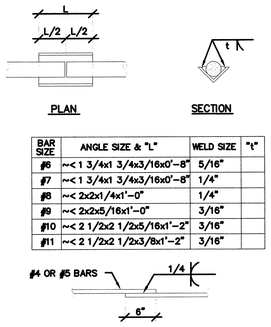

BAR SIZE	ANGLE SIZE & "L"	WELD SIZE	"t"
#6	~< 1 3/4x1 3/4x3/16x0'-8"	5/16"	
#7	~< 1 3/4x1 3/4x3/16x0'-8"	1/4"	
#8	~< 2x2x1/4x1'-0"	1/4"	
#9	~< 2x2x5/16x1'-0"	3/16"	
#10	~< 2 1/2x2 1/2x5/16x1'-2"	3/16"	
#11	~< 2 1/2x2 1/2x3/8x1'-2"	3/16"	

TYP. HORIZ. REINF. WELDED SPLICE

TYPICAL REINFORCEMENT SPLICE DETAIL | NONE | 11

MIN. LAP SPLICE TABLE (LENGTH IN INCHES)										
CONCRETE STRENGTH PSI	REBAR SIZE / LAP SPLICE TYPE	#3	#4	#5	#6	#7	#8	#9	#10	#11
3000	TENSION (TOP)	21	29	36	46	63	82	104	132	163
	TENSION (OTHER)	18	20	26	33	45	59	74	95	116
	COMPRESSION	18	18	19	23	27	30	34	38	42
4000	TENSION (TOP)	21	29	36	43	54	71	90	115	141
	TENSION (OTHER)	18	20	26	31	39	51	65	82	101
	COMPRESSION	18	18	19	23	27	30	34	38	42
MASONRY	TENSION	23	31	39	47	54	62	70	79	87
	COMPRESSION	18	24	29	35	41	47	53	60	66

NOTE:
ALL DETAILING & PLACING OF REINF. SHALL COMPLY WITH LAP SPLICE SCHED. & DETAILS, IN CASE OF CONFLICT, SPECIFIC DETAILS ON DWGS. SHALL GOVERN.

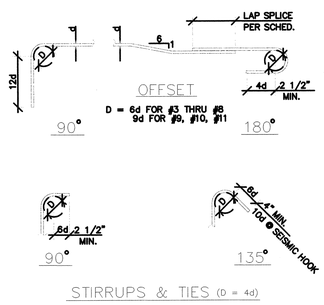

TYP. REBAR HOOKS AND SPLICES | NONE | 9

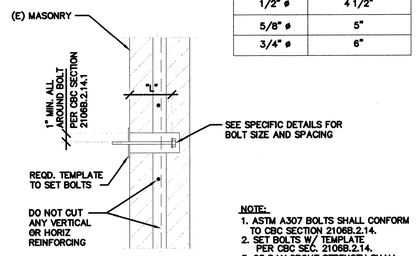

A307 MACHINE BOLT SIZE	MINIMUM EMBEDMENT LENGTH "L"
	9" CMU
1/2" ø	4 1/2"
5/8" ø	5"
3/4" ø	6"

NOTE:
1. ASTM A307 BOLTS SHALL CONFORM TO CBC SECTION 2106B.2.14.
2. SET BOLTS W/ TEMPLATE PER CBC SEC. 2106B.2.14.
3. 28 DAY GROUT STRENGTH SHALL BE MIN. 2000 PSI. EPOXY ADHESIVE NOT ACCEPTABLE

TYP. MACHINE BOLT IN EXISTING MASONRY | NONE | 8

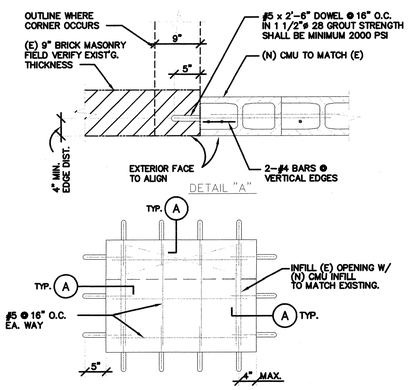

MASONRY IN-FILL IN EXIST'G MASONRY | NONE | 7

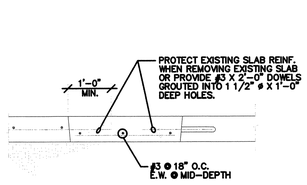

TYP. SLAB ON GRADE REPAIR | NONE | 6

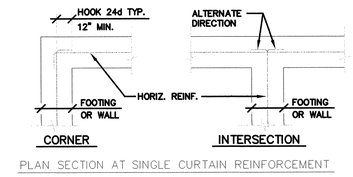

TYP. WALL AND FTG. REINF. AT CORNERS AND INTERSECTIONS | NONE | 5

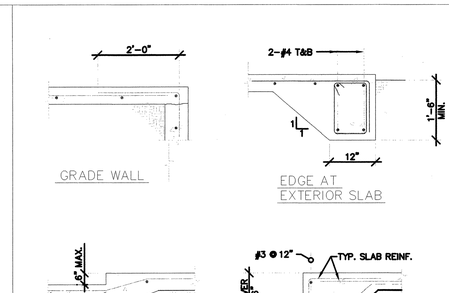

TYP. SLAB ON GRADE DETS | NONE | 4

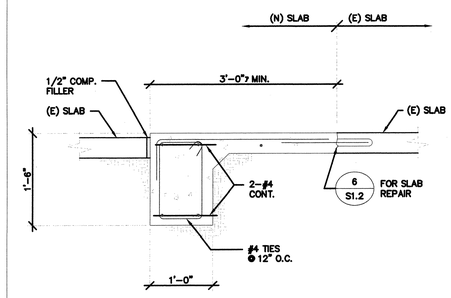

NEW SLAB REPAIR DETAIL | NONE | 3

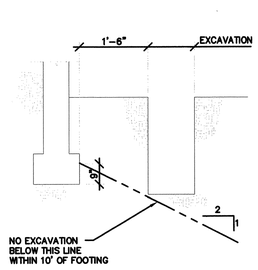

TYP. EXCAVATION ADJACENT TO FTG. | NONE | 2

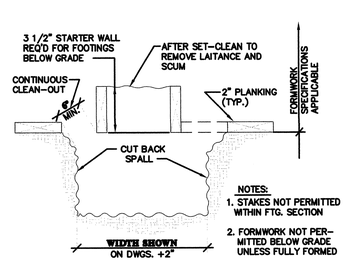

NOTE:
FOUNDATION CONCRETE MAY BE PLACED DIRECTLY INTO NEAT EXCAVATIONS PROVIDED THE FOUNDATION TRENCH WALLS ARE STABLE AS DETERMINED BY THE SOILS ENGINEER.
IN SUCH CASE THE MINIMUM FORMWORK SHOWN ABOVE IS MANDATORY TO INSURE CLEAN EXCAVATIONS IMMEDIATELY PRIOR TO AND DURING CONCRETE PLACEMENT.

MANDATORY MIN. FORMWORK | NONE | 1

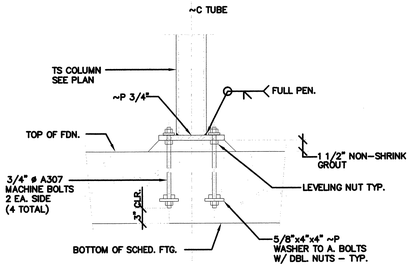

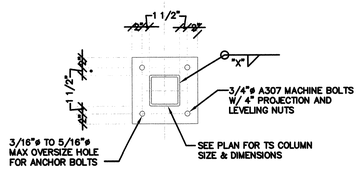

TS COLUMN WALL THICKNESS	FILLET WELD "X" ①
UP TO 1/4"	1/4"
5/16" TO 3/8"	5/16"
7/16" AND LARGER	3/8"

① THESE ARE MINIMUM FILLET WELDS UNLESS NOTED OTHERWISE ELSEWHERE IN THE DRAWINGS

TYP. TS COLUMN BASE PLATE DETAILS | NONE | 17

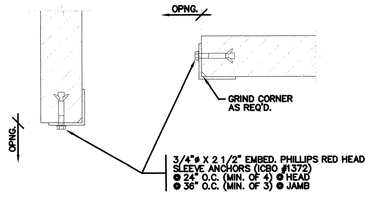

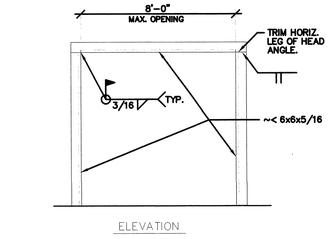

PROCEDURE
1. SHORE BEAMS, JOISTS, PURLINS, ETC., SUPPORTED BY WALL.
2. SAW CUT AND REMOVE WALL.
3. DRILL ALL HOLES FOR WEDGE ANCHORS.
4. INSTALL ANGLE @ HEAD AND SILL
5. INSTALL ANGLE @ JAMBS AND WELD JAMBS TO HEAD.
6. REMOVE SHORES.

OPENING IN MASONRY WALL | NONE | 13

CARRIER JOHNSON
ARCHITECTURE
INTERIOR DESIGN
PLANNING
GORDON R. CARRIER AIA
MICHAEL C. JOHNSON AIA
WILLIAM C. BOCKEN AIA
DEBORAH P. ELLIOTT IIDA
2600 MICHELSON DRIVE
SUITE 400
IRVINE, CALIFORNIA
92612
TEL 949 955-2353
FAX 949 955-2377
1301 THIRD AVENUE
SAN DIEGO, CALIFORNIA
92101
TEL 619 239-2353
FAX 619 239-6227

REGISTERED PROFESSIONAL ENGINEER JEFFREY A. ROESSLER No. C 32466 Exp. 12-31-04 CIVIL STATE OF CALIFORNIA

rdg
ROESSLER DESIGN GROUP
4050 Barranca Parkway, Suite 205
Irvine, California 92604
(949) 651-5111

ONTARIO PD::
HEADQUARTERS
2534 S. ARCHIBALD AVE., ONTARIO, CALIFORNIA 91761

Building Dept. Submittal 02.24.2003
ISSUES:

DIRECTORY/FILE NUMBER:
XREF'S DRAWINGS:
PROJECT NUMBER: 451100
DRAWN BY: CHECKED BY:
DATE:
SCALE: AS NOTED
TITLE: TYPICAL DETAILS

DRAWING NO: S1.2

ALL IDEAS, DESIGN, ARRANGEMENTS AND PLANS INDICATED OR REPRESENTED BY THIS DRAWING ARE OWNED BY AND THE PROPERTY OF CARRIER JOHNSON, AND WERE CREATED, EVOLVED AND DEVELOPED FOR USE ON, AND IN CONNECTION WITH THIS PROJECT. NONE OF SUCH IDEAS, DESIGN, ARRANGEMENTS, OR PLANS SHALL BE USED BY, OR DISCLOSED TO ANY PERSON, FIRM, OR CORPORATION FOR ANY PURPOSE WHATSOEVER WITHOUT THE WRITTEN PERMISSION OF CARRIER JOHNSON. FILING THESE DRAWINGS OR SPECIFICATIONS WITH ANY PUBLIC AGENCY IS NOT A PUBLICATION OF SAME. NO COPYING, REPRODUCTION OR USE THEREOF IS PERMISSIBLE WITHOUT THE CONSENT OF CARRIER JOHNSON.

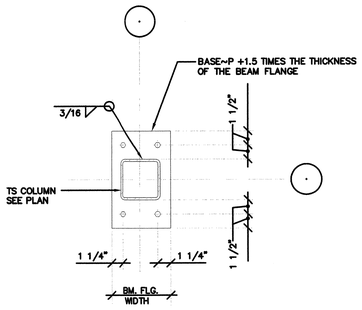

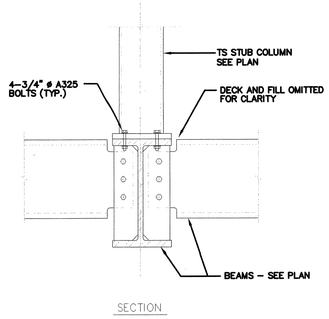

SECTION

TYPICAL STUB COL. AT BEAM | NONE | 19

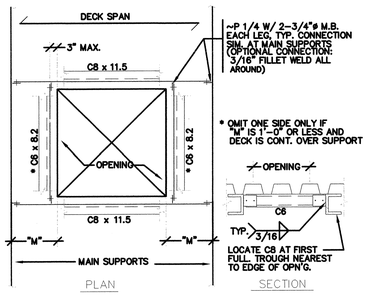

METAL DECK OPENINGS-12" TO 48" SQUARE, ROUND OR MULTIPLE OPN'GS | NONE | 16

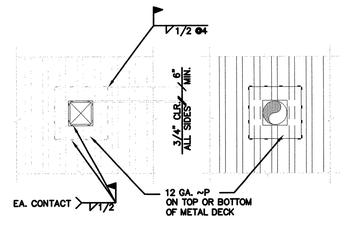

SQUARE OR RECTANGULAR HOLES

ROUND HOLES (DTLS. SAME AS SQUARE)

NOTE: REINF. NOT REQUIRED FOR OPENINGS LESS THAN 4" SQUARE OR 4" DIAMETER.

METAL DECK OPENINGS TO 9" SQ. OR 9" DIA. | NONE | 15

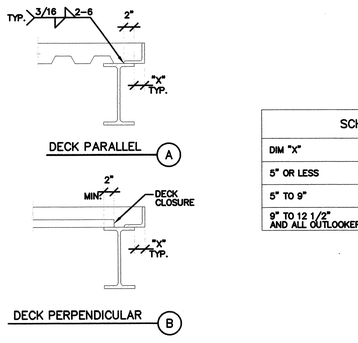

SCHEDULE	
DIM "X"	GALV. EDGE ANGLE
5" OR LESS	1/4"
5" TO 9"	1/4"
9" TO 12 1/2" AND ALL OUTLOOKERS	1/4"

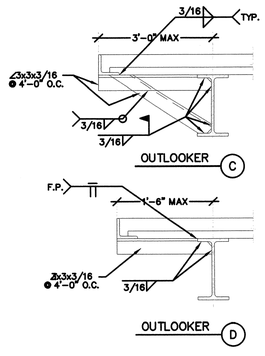

TYPICAL DECK EDGE | NONE | 10

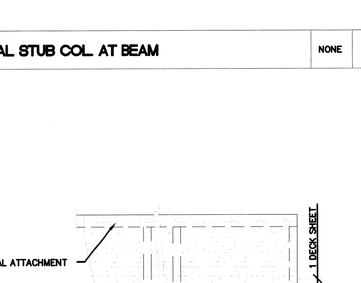

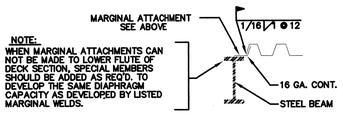

NOTE:
WHEN MARGINAL ATTACHMENTS CAN NOT BE MADE TO LOWER FLUTE OF DECK SECTION, SPECIAL MEMBERS SHOULD BE ADDED AS REQ'D. TO DEVELOP THE SAME DIAPHRAGM CAPACITY AS DEVELOPED BY LISTED MARGINAL WELDS.

DECK WELDING SCHEDULE					
LOCATION	DECK TYPE	DECK SIZE & GAGE	ATTACHMENT @ SUPPORTS	MARGINAL ATTACHMENT	SEAM ATTACHMENTS
ROOF	B-36	1 1/2"x 16 GA.	7 PDF PER SHEET	P.D.F. @ 6"	B.P. @ 6"

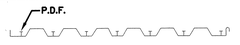

NOTES:
B.P. = BUTTON PUNCH
P.D.F. = HILTI POWDER DRIVEN FASTENERS ENP2-21PL15 (ICBO #4373)

TYP. DECK ATTACHMENT DTL. AND SCHED. | NONE | 17

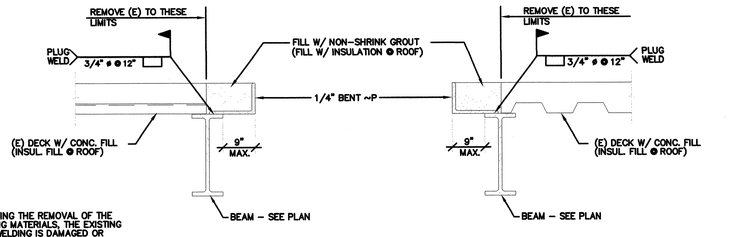

NOTE:
IF, DURING THE REMOVAL OF THE EXISTING MATERIALS, THE EXISTING DECK WELDING IS DAMAGED OR REMOVED, REWELD W. 1/2" ø PUDDLE WELDS @ 24" O.C.

NOTE:
ONE SIDE ONLY AT SIM CONDITION

NEW OPENING OR SLAB EDGE | NONE | 9

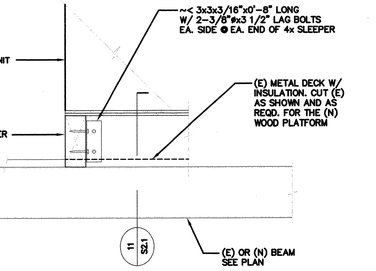

DETAIL | NONE | 12

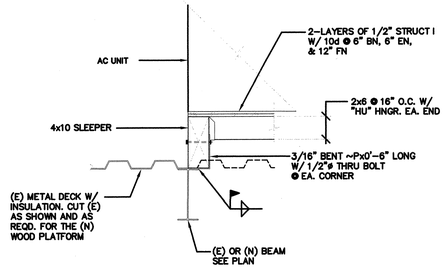

DETAIL | NONE | 11

DETAIL | NONE | 8

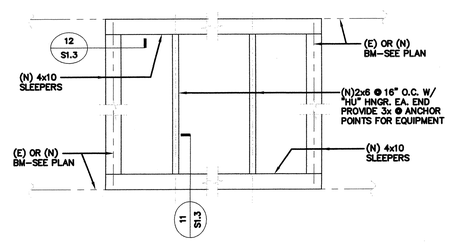

TYP. WOOD PLATFORM (PLAN) | NONE | 7

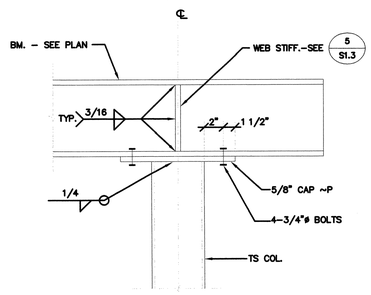

DETAIL | NONE | 6

~P THICKNESS	WELD THICKNESS "t"
1/4"	3/16"
1/2"	3/16"
3/4"	1/4"
OVER 3/4"	5/16"

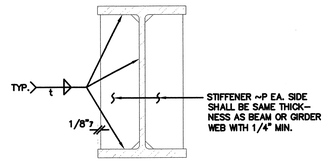

STIFFENER PLATE | NONE | 5

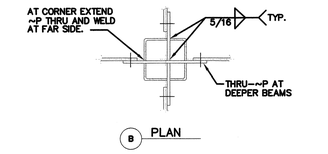

ROOF BEAM

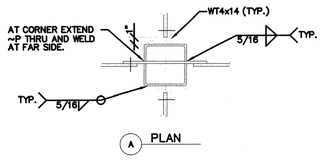

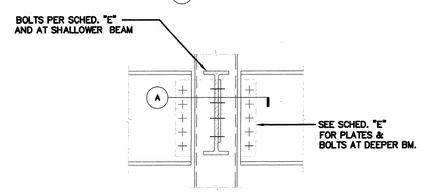

FLOOR BEAM

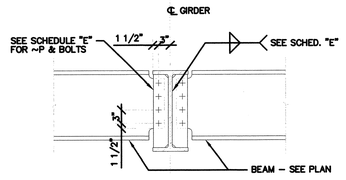

NOTE:
1. CONNECTION SHOWN IS TYP. UNLESS SPECIFICALLY DETAILED OTHERWISE.
2. WHERE BEAM DEPTH OF CONNECTED BEAM & SUPPORTING BEAM DIFFERS BY 9" NOMINALLY OR MORE, SHEAR ~P MAY BE TERMINATED A DISTANCE OF 2" BELOW THE LOWEST BOLT.

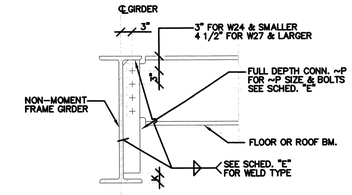

NOTE:
CONNECTION SHOWN IS TYPICAL UNLESS SPECIFICALLY DETAILED OTHERWISE. USE THIS DETAIL @ CONNECTIONS AT WHICH THERE IS NO CONNECTION ON THE OPPOSITE SIDE OF THE GIRDER WITHIN A DISTANCE OF 3'-0".

SCHEDULE "E"					
BM. SIZE	BEAM TO COL FLANGE				REMARKS
	~P THICKNESS	A325-SC BOLTS		FILLET WELD	
W8, W10	5/16"	2-3/4" ø		5/16"	
W12, W14	5/16"	3-3/4" ø			
W16	5/16"	4-3/4" ø			
W18	3/8"	5-3/4" ø			
W21	3/8"	6-3/4" ø			
W24, W27	1/2"	7-3/4" ø		5/16"	
W30	5/8"	8-1" ø		3/8"	
W33	5/8"	9-1" ø		7/16"	
W36	5/8"	10-1" ø		7/16"	

TYP. BEAM CONNECTION | NONE | 1

CARRIER JOHNSON
ARCHITECTURE
INTERIOR DESIGN
PLANNING
GORDON R. CARRIER AIA
MICHAEL C. JOHNSON AIA
WILLIAM C. BOCKEN AIA
DEBORAH P. ELLIOTT IIDA
2600 MICHELSON DRIVE SUITE 400
IRVINE, CALIFORNIA 92612
TEL 949 955-2353
FAX 949 955-2377
1301 THIRD AVENUE
SAN DIEGO, CALIFORNIA 92101
TEL 619 239-2353
FAX 619 239-6227

REGISTERED PROFESSIONAL ENGINEER JEFFREY A. ROESSLER No. C 32466 Exp. 12-31-04 CIVIL STATE OF CALIFORNIA

rdg
ROESSLER DESIGN GROUP
4590 Barranca Parkway, Suite 208
Irvine, California 92604
(949) 651-8111

ONTARIO PD:: HEADQUARTERS

2534 S. ARCHIBALD AVE., ONTARIO, CALIFORNIA 91761

5 Addendum 5 04.21.2003
Building Dept. Submittal 02.24.2003
ISSUES:

DIRECTORY/FILE NUMBER:
XREF'S DRAWINGS:
PROJECT NUMBER: 4511.00
DRAWN BY: CHECKED BY:
DATE:
SCALE: AS NOTED
TITLE: TYPICAL DETAILS

DRAWING NO: S1.3

ALL IDEAS, DESIGN, ARRANGEMENTS AND PLANS INDICATED OR REPRESENTED BY THIS DRAWING ARE OWNED BY, AND THE PROPERTY OF CARRIER JOHNSON AND WERE CREATED, EVOLVED AND DEVELOPED FOR USE ON, AND IN CONNECTION WITH THE SPECIFIED PROJECT. NONE OF SUCH IDEAS, DESIGN, ARRANGEMENTS OR PLANS SHALL BE USED BY OR DISCLOSED TO ANY PERSON, FIRM OR CORPORATION FOR ANY PURPOSE WHATSOEVER WITHOUT THE WRITTEN PERMISSION OF CARRIER JOHNSON. COPYING, REPRODUCTION OR USE THEREOF IS PERMISSIBLE WITHOUT THE CONSENT OF CARRIER JOHNSON. FILING THESE DRAWINGS OR SPECIFICATIONS WITH ANY PUBLIC AGENCY IS NOT A PUBLICATION OF SAME. NO COPYING, REPRODUCTION OR USE THEREOF IS PERMISSIBLE WITHOUT THE CONSENT OF CARRIER JOHNSON.

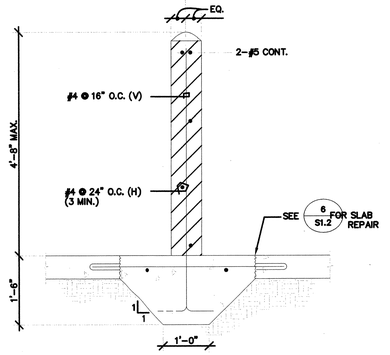

DETAIL

NONE	20

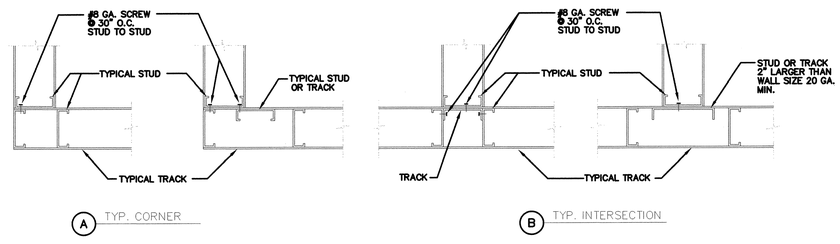

METAL STUDS DETAIL

NONE	12

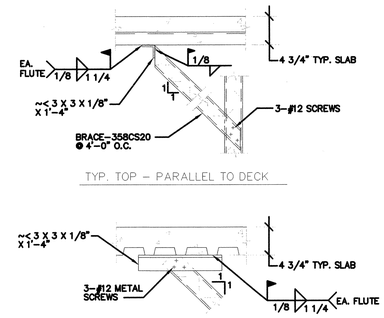

TYP. BRACE DETAILS @ VERT. STUD LESS THAN 20 GA.

NONE	8

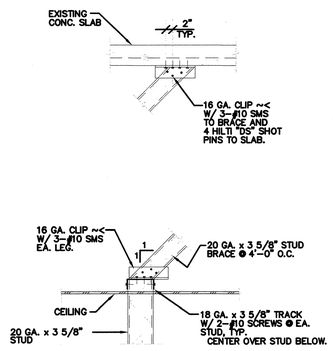

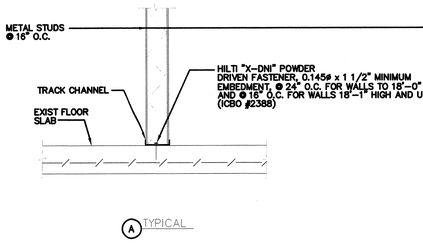

3

TYP. NON-BRG. INTERIOR PARTITIONS

NONE	15

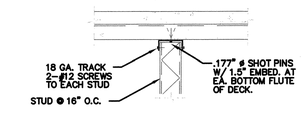

TYP. HANGING PARTITIONS

NONE	7

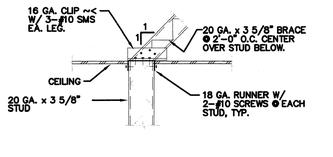

PARTIAL HEIGHT WALLS

NONE	3

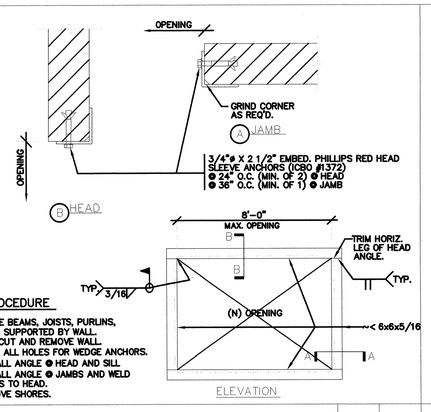

OPENING IN MASONRY WALL

NONE	18

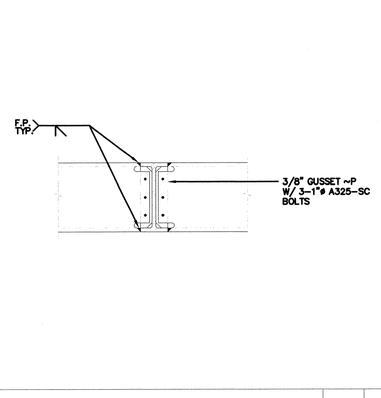

CANTILEVER BM. MOMENT CONN.

NONE	14

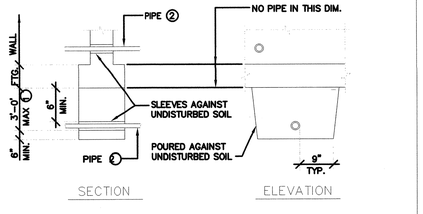

TYP. - PIPES THROUGH FTG.

NONE	17

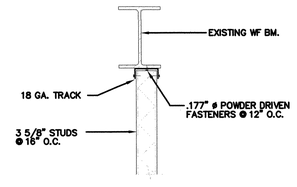

TYP. HANGING PARTITIONS TO BEAM

NONE	13

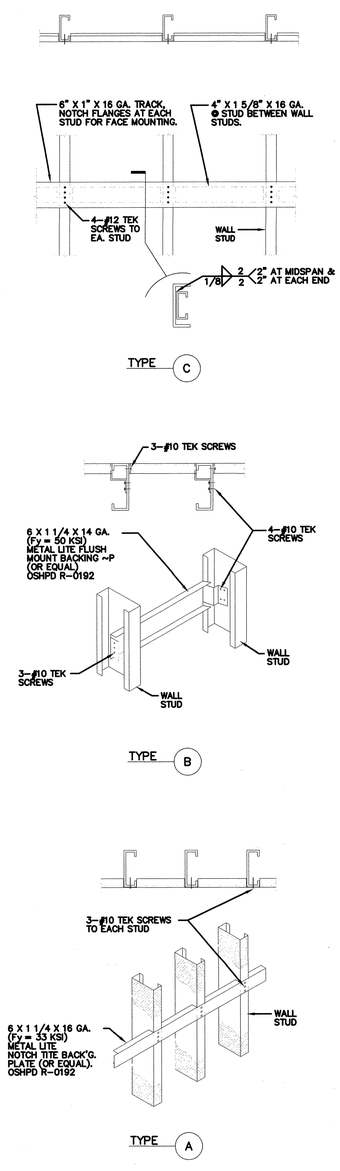

TYPICAL BACKING PLATES

NONE	9

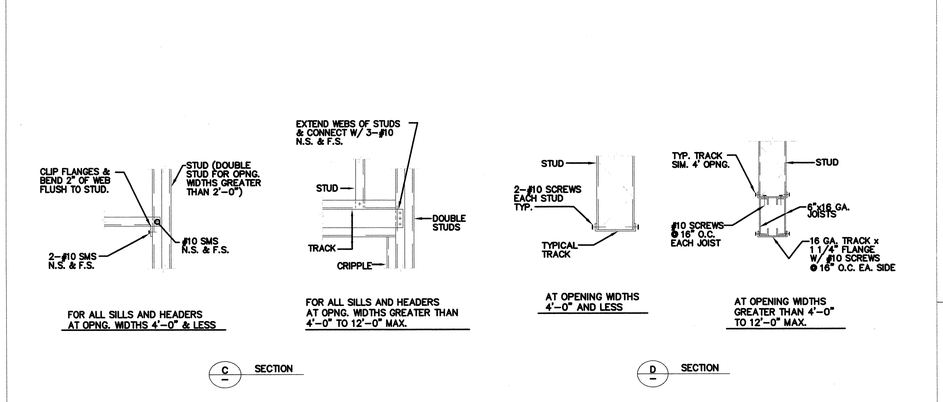

TYPICAL STUD WALL DETAILS

NONE	1

CARRIER JOHNSON
ARCHITECTURE
INTERIOR DESIGN
PLANNING
GORDON R. CARRIER AIA
MICHAEL C. JOHNSON AIA
WILLIAM C. BOCKEN AIA
DEBORAH P. ELLIOTT IIDA
2600 MICHELSON DRIVE
SUITE 400
IRVINE, CALIFORNIA
92612
TEL 949 955-2353
FAX 949 955-2377
1301 THIRD AVENUE
SAN DIEGO, CALIFORNIA
92101
TEL 619 239-2353
FAX 619 239-6227

REGISTERED PROFESSIONAL ENGINEER JEFFREY A. ROSSLER No. C 32468 Exp. 12-31-04 CIVIL STATE OF CALIFORNIA

rdg
ROESSLER DESIGN GROUP
4650 Barranca Parkway, Suite 205
Irvine, California 92604
(949) 651-8111

ONTARIO PD:: HEADQUARTERS

2534 S. ARCHIBALD AVE., ONTARIO, CALIFORNIA 91761

Building Dept. Submittal 02.24.2003
ISSUES:

DIRECTORY/FILE NUMBER:
XREF'S DRAWINGS:
PROJECT NUMBER: 4511.00
DRAWN BY: CHECKED BY:
DATE:
SCALE: AS NOTED
TITLE: TYPICAL DETAILS

DRAWING NO:
S1.4

ALL IDEAS, DESIGN, ARRANGEMENTS AND PLANS INDICATED OR REPRESENTED BY THIS DRAWING ARE OWNED BY, AND THE PROPERTY OF CARRIER JOHNSON, AND WERE CREATED, EVOLVED AND DEVELOPED FOR USE ON, AND IN CONNECTION WITH THIS PROJECT. NONE OF SUCH IDEAS, DESIGN, ARRANGEMENTS OR PLANS SHALL BE USED BY OR DISCLOSED TO ANY PERSON, FIRM OR CORPORATION FOR ANY PURPOSE WHATSOEVER WITHOUT THE WRITTEN PERMISSION OF CARRIER JOHNSON. FILING THESE DRAWINGS OR SPECIFICATIONS WITH ANY PUBLIC AGENCY IS NOT A PUBLICATION OF SAME. NO COPYING, REPRODUCTION OR USE THEREOF IS PERMISSIBLE WITHOUT THE CONSENT OF CARRIER JOHNSON.

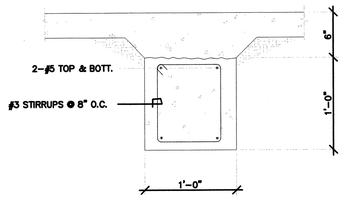

TYP. TIE BEAM | NONE | 20

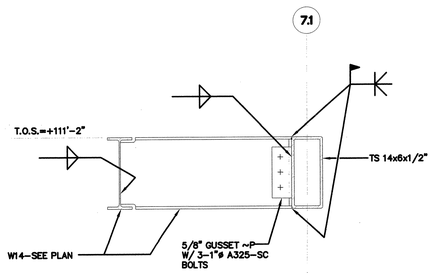

DETAIL | NONE | 19

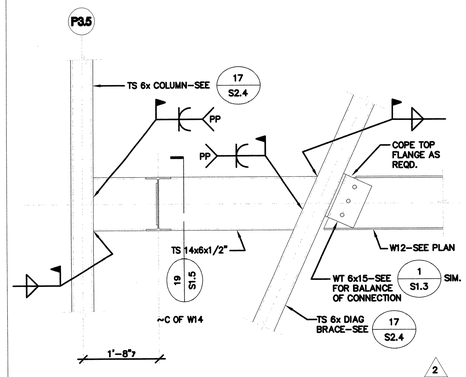

DETAIL | NONE | 18

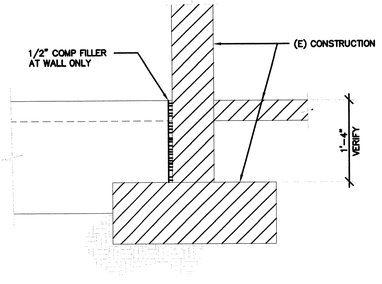

DETAIL | NONE | 17

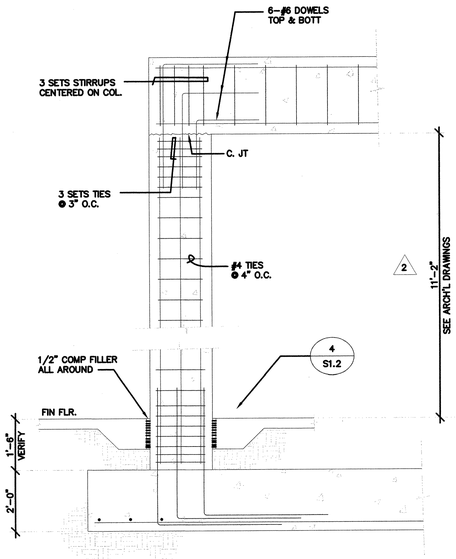

SECTION A–A

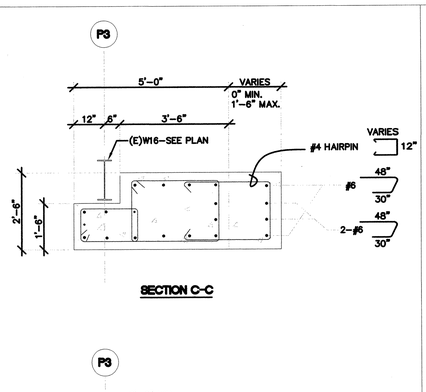

SECTION C–C

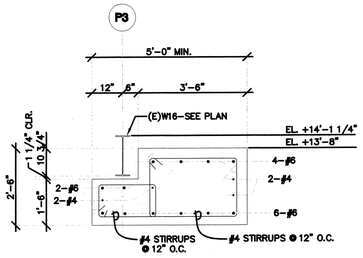

SECTION B–B

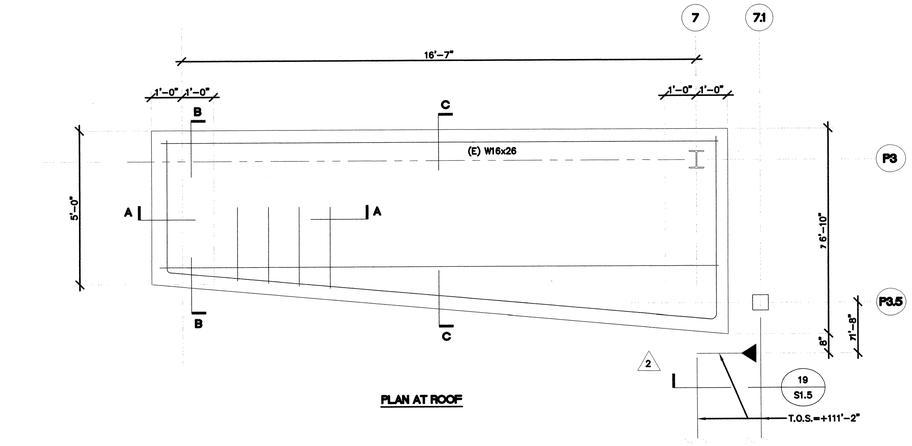

PLAN AT ROOF

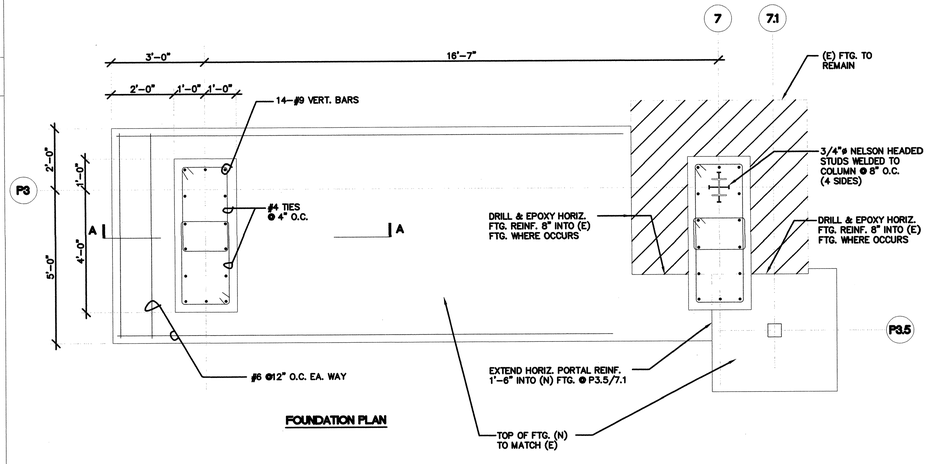

FOUNDATION PLAN

PORTAL PLAN AND DETAIL | NONE | 9

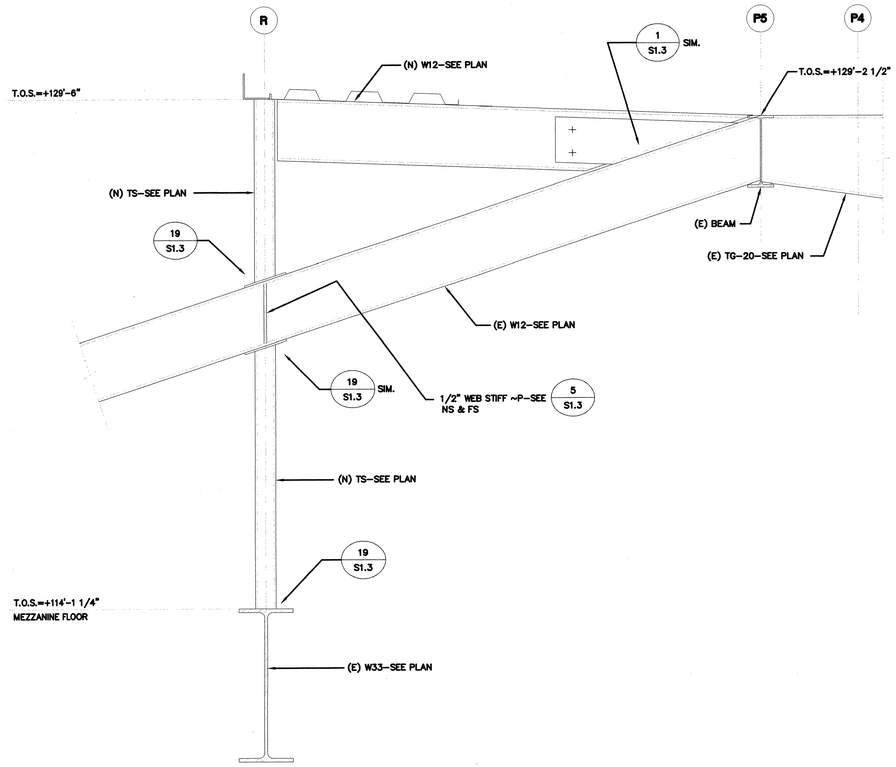

DETAIL | NONE | 3

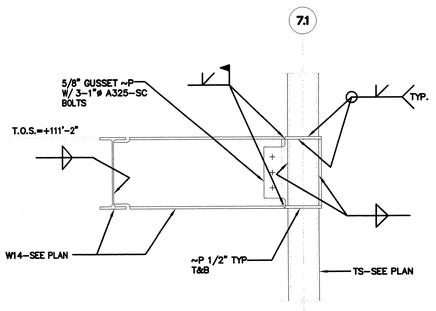

DETAIL | NONE | 6

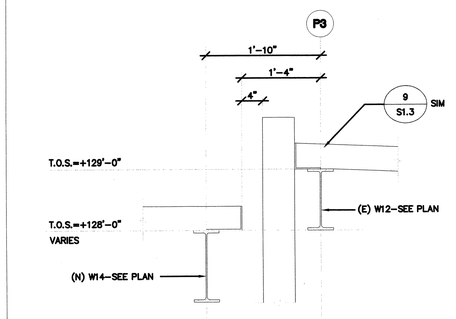

DETAIL | NONE | 2

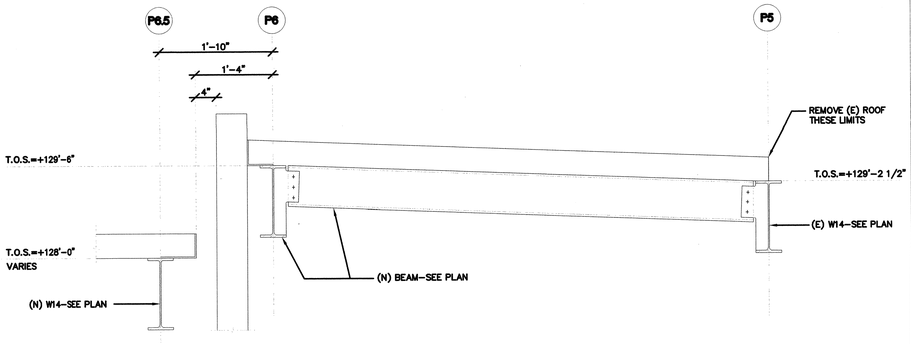

DETAIL | NONE | 1

CARRIER JOHNSON
ARCHITECTURE
INTERIOR DESIGN
PLANNING
GORDON R. CARRIER AIA
MICHAEL C. JOHNSON AIA
WILLIAM C. BOCKEN AIA
DEBORAH P. ELLIOTT IIDA
2600 MICHELSON DRIVE SUITE 400
IRVINE, CALIFORNIA 92612
TEL 949 955-2353
FAX 949 955-2377
1301 THIRD AVENUE
SAN DIEGO, CALIFORNIA 92101
TEL 619 239-2353
FAX 619 239-6227

REGISTERED PROFESSIONAL ENGINEER — ROBERT A. ROESSLER — No. C 32466 — Exp. 12-31-04 — CIVIL — STATE OF CALIFORNIA

rdg
ROESSLER DESIGN GROUP
4050 Barranca Parkway, Suite 205
Irvine, California 92604
(949) 651-5111

ONTARIO PD:: HEADQUARTERS

2534 S. ARCHIBALD AVE., ONTARIO, CALIFORNIA 91761

Addendum 2/Bldg. Dept. Re-Submittal 03.20.2003
Building Dept. Submittal 02.24.2003
ISSUES:

DIRECTORY/FILE NUMBER:
XREF'S DRAWINGS:
PROJECT NUMBER: 45ft00
DRAWN BY: CHECKED BY:
DATE:
SCALE: AS NOTED
TITLE: MISCELLANEOUS DETAILS

DRAWING NO: S1.5

ALL IDEAS, DESIGN, ARRANGEMENTS AND PLANS INDICATED OR REPRESENTED BY THIS DRAWING ARE OWNED BY AND THE PROPERTY OF CARRIER JOHNSON, AND WERE CREATED, EVOLVED AND DEVELOPED FOR USE ON, AND IN CONNECTION WITH THIS PROJECT. NONE OF SUCH IDEAS, DESIGNS, ARRANGEMENTS OR PLANS SHALL BE USED BY OR DISCLOSED TO ANY PERSON, FIRM OR CORPORATION FOR ANY PURPOSE WHATSOEVER WITHOUT THE WRITTEN PERMISSION OF CARRIER JOHNSON. FILING THESE DRAWINGS OR SPECIFICATIONS WITH ANY PUBLIC AGENCY IS NOT A PUBLICATION OF SAME, NO COPYING, REPRODUCTION OR USE THEREOF IS PERMISSIBLE WITHOUT THE CONSENT OF CARRIER JOHNSON.

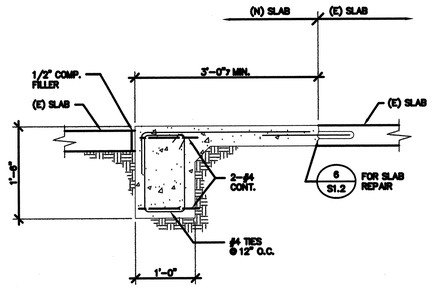

NEW SLAB REPAIR DETAIL

NONE	20

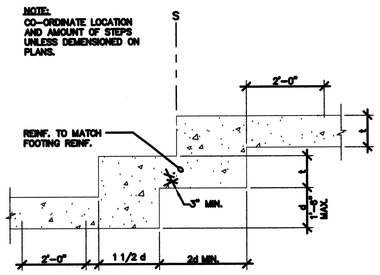

TYP. STEPPED FOOTING

NONE	16

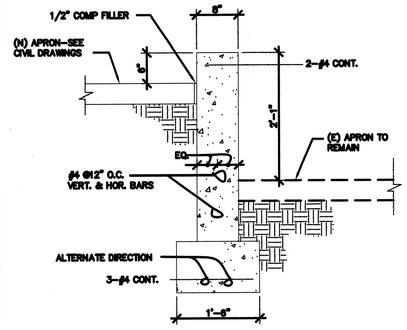

DETAIL

NONE	12

NOTE:

WALL SHALL BE BRACED PRIOR TO BACKFILLING BRACES SHALL REMAIN UNTIL TOP SLAB IS POURED AND CURED.

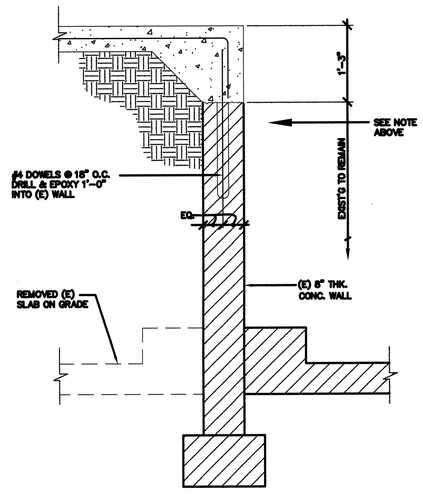

DETAIL

NONE	7

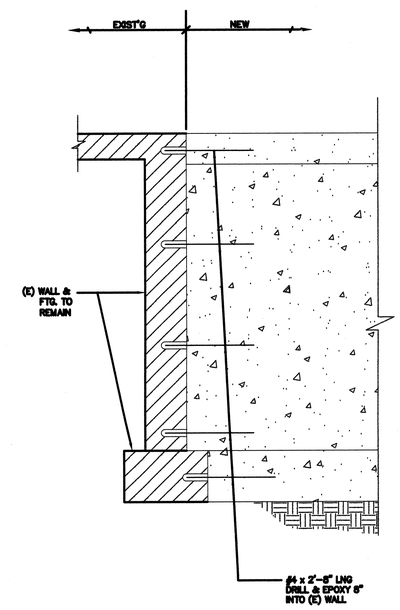

SECTION

NONE	3

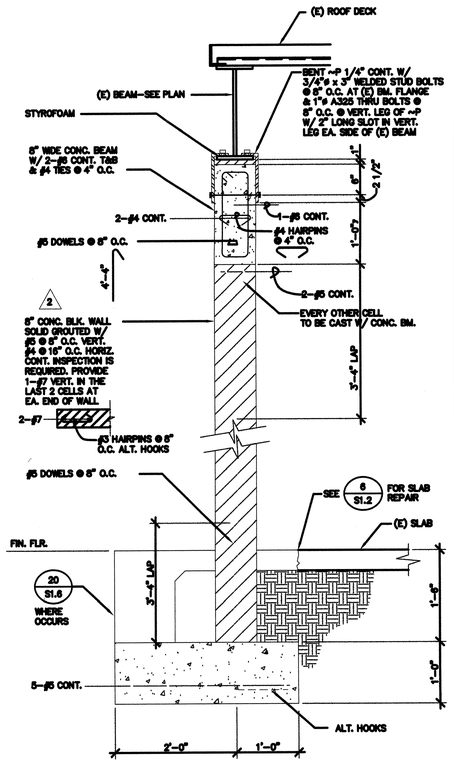

SECTION AT (N) CMU WALL

NONE	18

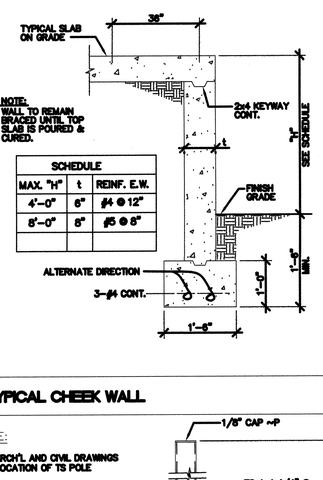

SCHEDULE		
MAX. "H"	t	REINF. E.W.
4'-0"	6"	#4 @ 12"
8'-0"	8"	#5 @ 8"

TYPICAL CHEEK WALL

NONE	15

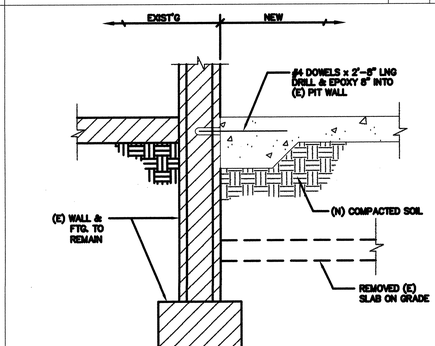

DETAIL

NONE	11

NOTE:

SEE ARCHITECTURAL AND CIVIL DRAWINGS FOR LOCATION OF PILASTER

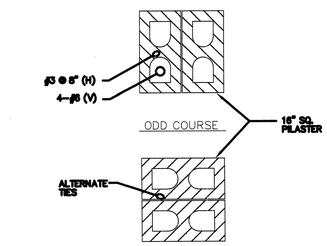

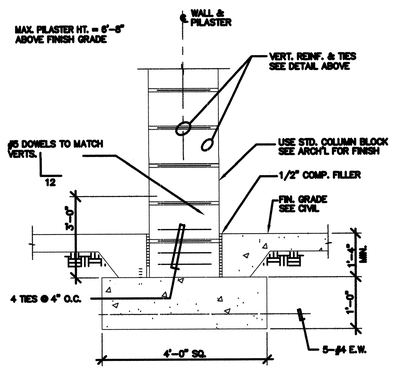

FENCE PILASTER DETAIL

NONE	9

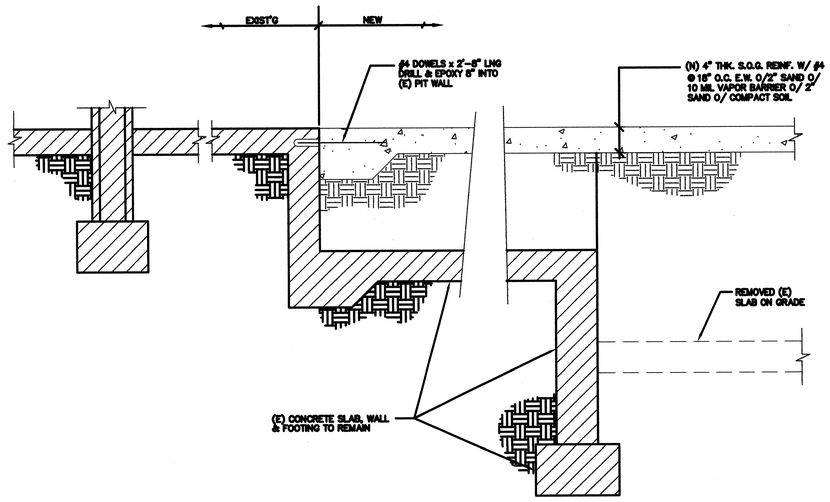

SECTION

NONE	1

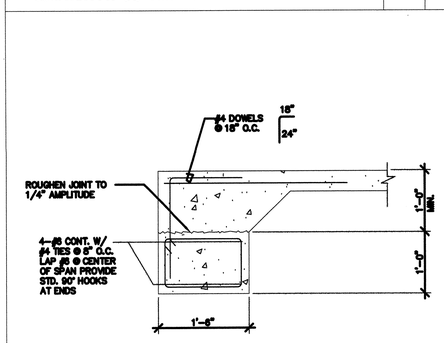

DETAIL-TIE BEAM

NONE	17

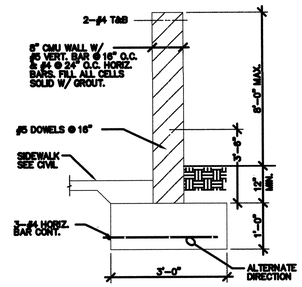

NOTE:

SEE ARCHITECTURAL AND CIVIL DRAWINGS FOR LOCATION OF CMU SITE WALL

TYP. CMU SITE WALL

NONE	13

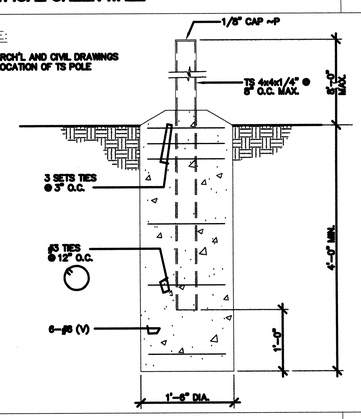

SCREEN SUPPORT AND TS POLE FOUNDATION

NONE	14

NOTE:

SEE ARCH'L AND CIVIL DRAWINGS FOR LOCATION OF TS POLE

CARRIER JOHNSON
ARCHITECTURE
INTERIOR DESIGN
PLANNING
GORDON R. CARRIER AIA
MICHAEL C. JOHNSON AIA
WILLIAM C. BOCKEN AIA
DEBORAH P. ELLIOTT IIDA
2600 MICHELSON DRIVE
SUITE 400
IRVINE, CALIFORNIA
92612
TEL 949 955-2353
FAX 949 955-2377
1301 THIRD AVENUE
SAN DIEGO, CALIFORNIA
92101
TEL 619 239-2353
FAX 619 239-6227

REGISTERED PROFESSIONAL ENGINEER JEFFREY A. ROESSLER No. C 32468 Exp. 12-31-04 CIVIL STATE OF CALIFORNIA

rdg
ROESSLER DESIGN GROUP
4690 Barranca Parkway, Suite 209
Irvine, California 92604
(949) 681-8111

ONTARIO PD:: HEADQUARTERS

2534 S. ARCHIBALD AVE., ONTARIO, CALIFORNIA 91761

2 Addendum 2/Bldg. Dept. Re-Submittal 03.20.2003
Building Dept. Submittal 02.24.2003
ISSUES:

DIRECTORY/FILE NUMBER:
XREF'S DRAWINGS:
PROJECT NUMBER: 4511.00
DRAWN BY: CHECKED BY:
DATE:
SCALE: AS NOTED
TITLE: MISCELLANEOUS DETAILS

DRAWING NO: S1.6

ALL IDEAS, DESIGN, ARRANGEMENTS AND PLANS INDICATED OR REPRESENTED BY THIS DRAWING ARE OWNED BY AND THE PROPERTY OF CARRIER JOHNSON AND WERE CRE., ED, EVOLVED AND DEVELOPED FOR USE ON, AND IN CONNECTION WITH THIS PROJECT. NONE OF SUCH IDEAS, DESIGN, ARRANGEMENTS, OR PLANS SHALL BE USED BY, OR DISCLOSED TO ANY PERSON, FIRM, OR CORPORATION FOR ANY PURPOSE WHATSOEVER WITHOUT THE WRITTEN PERMISSION OF CARRIER JOHNSON. FILING THESE DRAWINGS OR SPECIFICATIONS WITH ANY PUBLIC AGENCY IS NOT A PUBLICATION OF SAME. NO COPYING, REPRODUCTION OR USE THEREOF IS PERMISSIBLE WITHOUT THE CONSENT OF CARRIER JOHNSON.

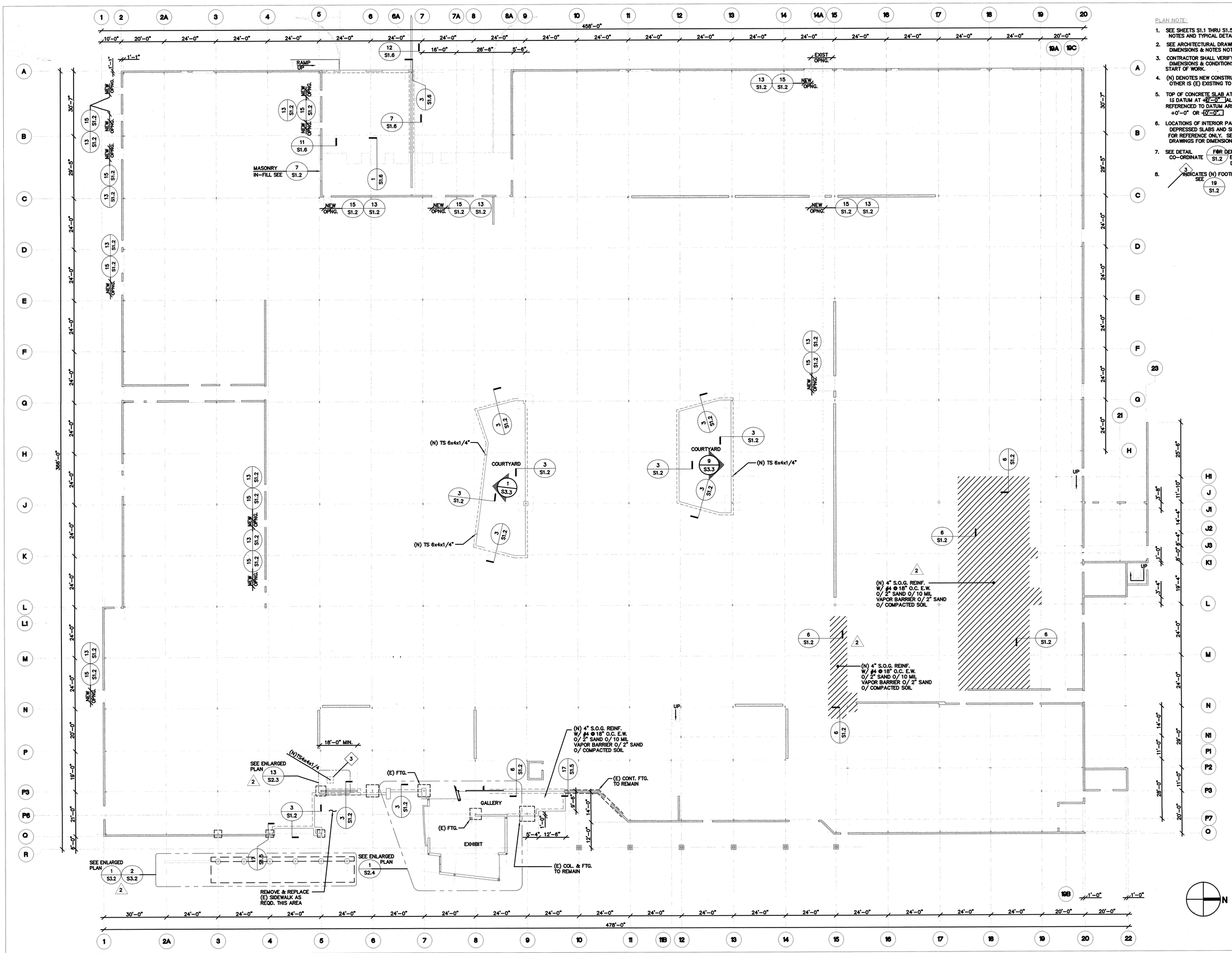

PLAN NOTE:

1. SEE SHEETS S1.1 THRU S1.5 FOR GENERAL NOTES AND TYPICAL DETAILS
2. SEE ARCHITECTURAL DRAWINGS FOR DIMENSIONS & NOTES NOT SHOWN ON PLAN.
3. CONTRACTOR SHALL VERIFY ALL EXISTING DIMENSIONS & CONDITIONS PRIOR TO START OF WORK.
4. (N) DENOTES NEW CONSTRUCTION, ALL OTHER IS (E) EXISTING TO REMAIN.
5. TOP OF CONCRETE SLAB AT GROUND FLOOR IS DATUM AT +0'-0" ALL ELEVATIONS REFERENCED TO DATUM ARE NOTED THUS: +0'-0" OR -0'-0".
6. LOCATIONS OF INTERIOR PARTITIONS, DEPRESSED SLABS AND SLOPED ARE FOR REFERENCE ONLY. SEE ARCHITECTURAL DRAWINGS FOR DIMENSIONED LOCATIONS.
7. SEE DETAIL 3 / S1.2 FOR DEPRESSED SLAB CO-ORDINATE EXTENT WITH ARCH'L DRAWINGS—SEE DETAIL
8. 3 INDICATES (N) FOOTING SEE 19 S1.2

CARRIER JOHNSON
ARCHITECTURE
INTERIOR DESIGN
PLANNING
GORDON R. CARRIER AIA
MICHAEL C. JOHNSON AIA
WILLIAM C. BOCKEN AIA
DEBORAH P. ELLIOTT IIDA
2600 MICHELSON DRIVE SUITE 400
IRVINE, CALIFORNIA 92612
TEL 949 955-2353
FAX 949 955-2377
1301 THIRD AVENUE
SAN DIEGO, CALIFORNIA 92101
TEL 619 239-2353
FAX 619 239-6227

REGISTERED PROFESSIONAL ENGINEER JEFFREY A. ROESSLER No. C 32466 Exp. 12-31-04 CIVIL STATE OF CALIFORNIA

rdg
ROESSLER DESIGN GROUP
4650 Barranca Parkway, Suite 205
Irvine, California 92604
(949) 651-5111

ONTARIO PD:: HEADQUARTERS

2534 S. ARCHIBALD AVE., ONTARIO, CALIFORNIA 91761

2 Addendum 2/Bldg. Dept. Re-Submittal 03.20.2003
Building Dept. Submittal 02.24.2003
ISSUES:

DIRECTORY/FILE NUMBER:
XREF'S DRAWINGS:
PROJECT NUMBER: 4511.00
DRAWN BY: CHECKED BY:
DATE:
SCALE: AS NOTED
TITLE: GROUND FLOOR/ FOUNDATION PLAN

DRAWING NO: S2.1

GROUND FLOOR / FOUNDATION PLAN

1/16" 1

ALL IDEAS, DESIGN, ARRANGEMENTS AND PLANS INDICATED OR REPRESENTED BY THIS DRAWING ARE OWNED BY, AND THE PROPERTY OF CARRIER JOHNSON AND WERE CREATED, EVOLVED AND DEVELOPED FOR USE ON, AND IN CONNECTION WITH THIS PROJECT. NONE OF SUCH IDEAS, DESIGN, ARRANGEMENTS, OR PLANS SHALL BE USED BY OR DISCLOSED TO ANY PERSON, FIRM, OR CORPORATION FOR ANY PURPOSE WHATSOEVER WITHOUT THE WRITTEN PERMISSION OF CARRIER JOHNSON. FILING THESE DRAWINGS OR SPECIFICATIONS WITH ANY PUBLIC AGENCY IS NOT A PUBLICATION OF SAME. NO COPYING, REPRODUCTION OR USE THEREOF IS PERMISSIBLE WITHOUT THE CONSENT OF CARRIER JOHNSON.

PLAN NOTES

1. SEE SHEETS S1.1 THRU S1.5 FOR GENERAL NOTES AND TYPICAL DETAILS
2. SEE ARCHITECTURAL DRAWINGS FOR DIMENSIONS & NOTES NOT SHOWN ON PLAN.
3. CONTRACTOR SHALL VERIFY ALL EXISTING DIMENSIONS & CONDITIONS PRIOR TO START OF WORK.
4. (N) DENOTES NEW CONSTRUCTION, ALL OTHER IS (E) EXISTING TO REMAIN.
5. TOP OF STEEL ELEVATION AT ROOF VARIES SEE PLAN FOR TOP OF STEEL AS REFERENCE TO DATUM NOTED THUS: ▪0'-0"
6. SEE ARCHITECTURAL DRAWINGS FOR EXACT EXTENT AND LOCATION OF OF DEPRESSIONS, OPENINGS, ETC.

MEZZANINE AREA -SEE SHT. S2.3

ENLARGED PLAN SEE 3 S2.4

MAIN ROOF FRAMING PLAN

1/16" | 1

CARRIER JOHNSON
ARCHITECTURE
INTERIOR DESIGN
PLANNING
GORDON R. CARRIER AIA
MICHAEL C. JOHNSON AIA
WILLIAM C. BOCKEN AIA
DEBORAH P. ELLIOTT IIDA
2600 MICHELSON DRIVE
SUITE 400
IRVINE, CALIFORNIA
92612
TEL 949 955-2353
FAX 949 955-2377
1301 THIRD AVENUE
SAN DIEGO, CALIFORNIA
92101
TEL 619 239-2353
FAX 619 239-6227

REGISTERED PROFESSIONAL ENGINEER JEFFREY A. RAMSEY No. C 32466 Exp. 12-31-04 CIVIL STATE OF CALIFORNIA

rdg
ROESSLER DESIGN GROUP
4650 Barranca Parkway, Suite 205
Irvine, California 92604
(949) 651-0111

ONTARIO PD:: HEADQUARTERS

2534 S. ARCHIBALD AVE., ONTARIO, CALIFORNIA 91761

Addendum 2/Bldg. Dept. Re-Submittal 03.20.2003
Building Dept. Submittal 02.24.2003
ISSUES:

DIRECTORY/FILE NUMBER:
XREF'S DRAWINGS:
PROJECT NUMBER: 4511.00
DRAWN BY: CHECKED BY:
DATE:
SCALE: AS NOTED
TITLE: ROOF FRAMING PLAN

DRAWING NO: S2.2

ALL IDEAS, DESIGN, ARRANGEMENTS AND PLANS INDICATED OR REPRESENTED BY THIS DRAWING ARE OWNED BY AND THE PROPERTY OF CARRIER JOHNSON AND WERE CREATED, EVOLVED AND DEVELOPED FOR USE ON, AND IN CONNECTION WITH THIS PROJECT. NONE OF SUCH IDEAS, DESIGN, ARRANGEMENTS OR PLANS SHALL BE USED, OR DISCLOSED TO ANY PERSON, FIRM OR CORPORATION FOR ANY PURPOSE WHATSOEVER WITHOUT THE WRITTEN PERMISSION OF CARRIER JOHNSON. FILING THESE DRAWINGS OR SPECIFICATIONS WITH ANY PUBLIC AGENCY IS NOT A PUBLICATION OF SAME. NO COPYING, REPRODUCTION OR USE THEREOF IS PERMISSIBLE WITHOUT THE CONSENT OF CARRIER JOHNSON.

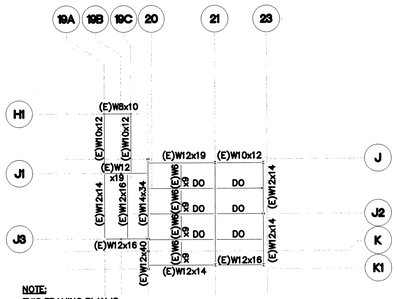

NOTE:
THIS FRAMING PLAN IS
PROVIDED FOR INFORMATION ONLY

MEZZANINE FLOOR FRAMING PLAN | 1/16" | 13

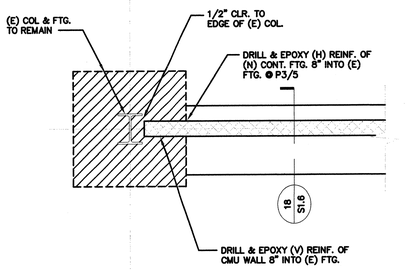

DETAIL | NONE | 19

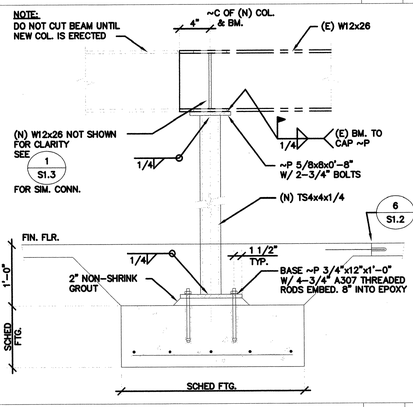

DETAIL | 1" | 18

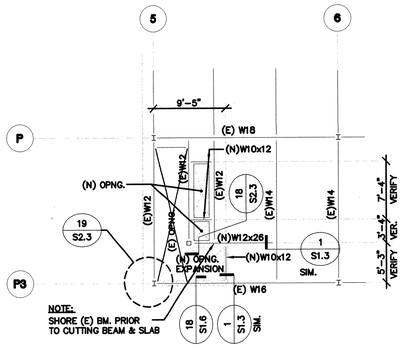

PARTIAL MEZZANINE FLOOR FRAMING PLAN | 1/8" | 17

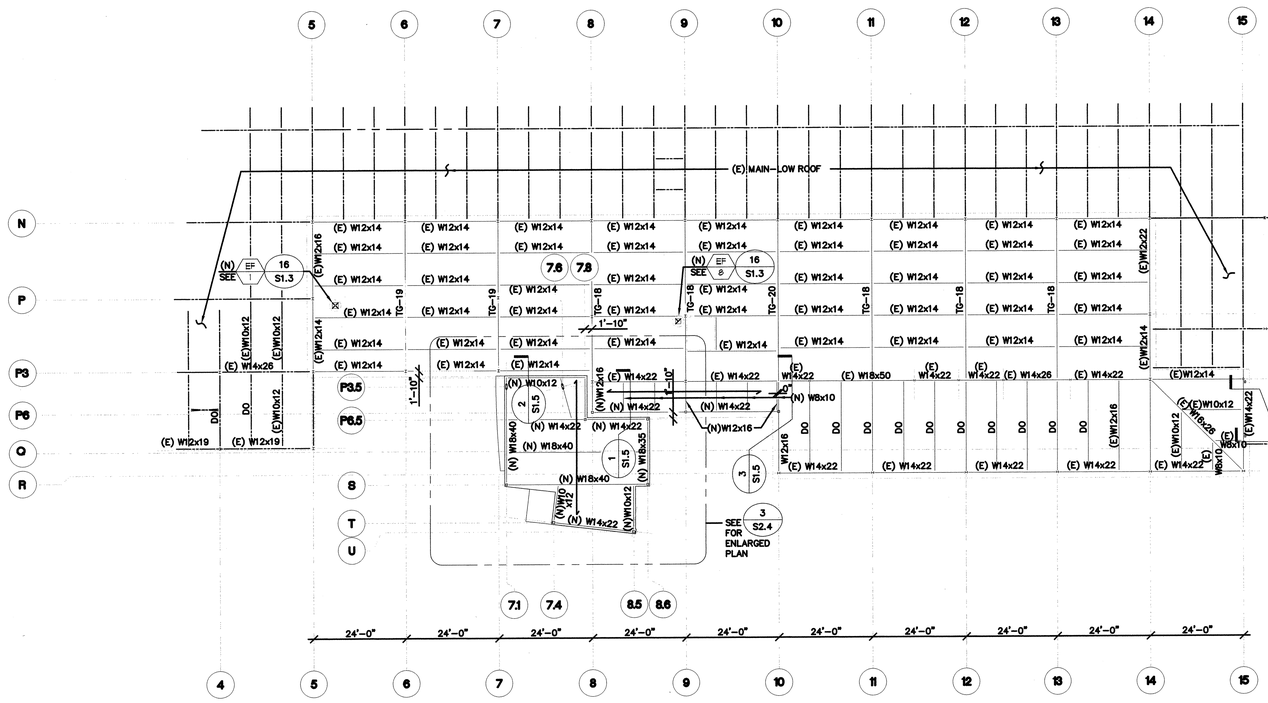

MEZZ. ROOF FRAMING PLAN NOTES

1. SEE SHEETS S1.1 THRU S1.5 FOR GENERAL NOTES AND TYPICAL DETAILS
2. FINISH GROUND FLOOR IS AT ELEVATION +0'-0" TOP OF STEEL ELEVATION AT ROOF VARIES, SEE PLAN FOR TOP OF STEEL AS REFERENCED TO GROUND FLOOR NOTED THUS: +0'-0" OR -0'-0"
3. SEE ARCHITECTURAL DRAWINGS FOR DIMENISONS AND ELEVATIONS NOT SHOWN OR NOTED.
4. TYPICAL ROOF SLAB IS 1 1/2" METAL DECK. INDICATES DIRECTION OF DECKING. SEE 18 S1.3

MEZZANINE ROOF FRAMING PLAN | 1/16" | 3

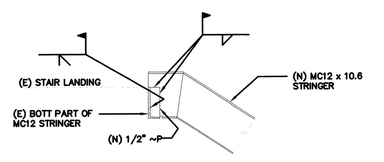

SECTION C–C

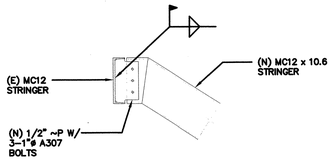

SECTION B–B

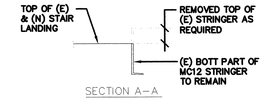

SECTION A–A

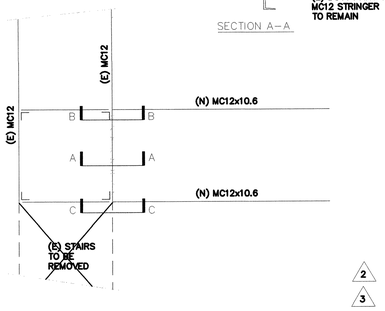

PARTIAL PLAN AND DETAILS-STAIR NO.1 | NONE | 13

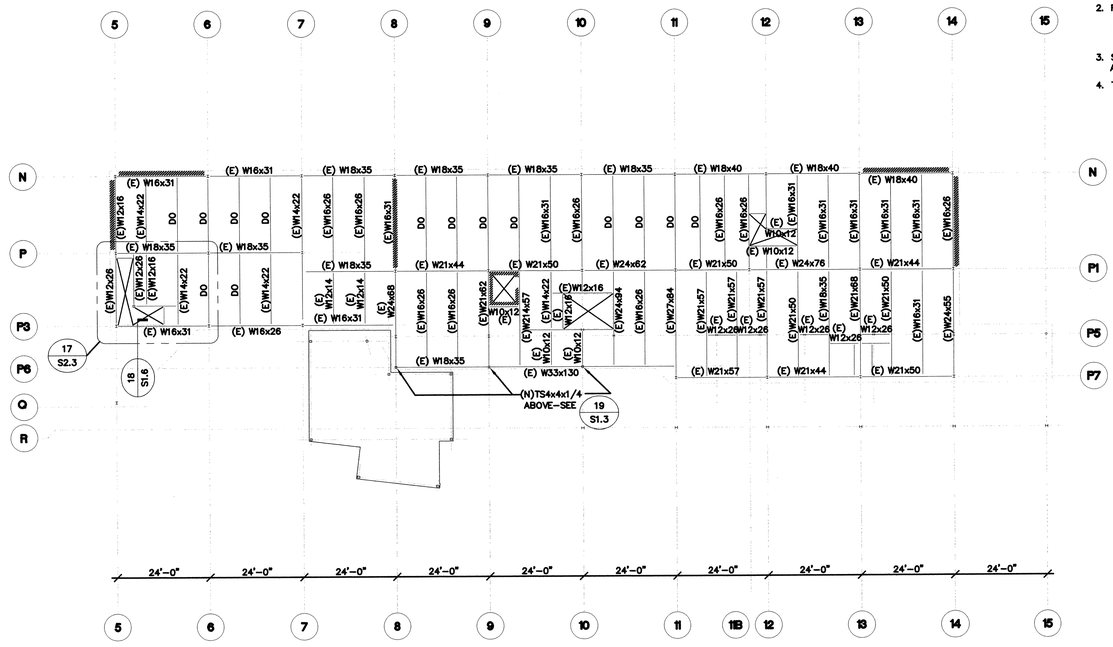
5
6
7
8
9
10
11
12
13
14
15
N
P
P3
P6
Q
R
P1
P5
P7
(E) W16x31
(E) W18x35
(E) W16x26
(E) W16x31
DO
(E)W12x16
(E)W14x22
(E)W12x26
(E)W12x16
(E) W18x35
(E) W16x31
(E) W16x26
(E) W18x35
(E) W21x44
(E) W21x50
(E) W24x62
(E) W18x40
(E) W18x40
(E) W21x50
(E) W24x76
(E) W21x44
(E) W10x12
(E) W16x31
(E)W14x22
(E)W12x14
(E)W16x31
(E)W16x26
(E)W14x22
(E)W16x31
(E)W16x26
(E)W14x22
(E)W16x31
(E)W16x26
(E)W14x22

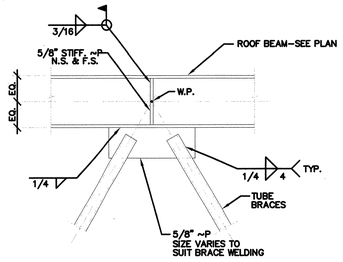

DETAIL | NONE | 20

DIAGONAL BRACE SIZE AND WELDS		
DIAGONAL BRACE SIZE	MIN. WELD LENGTH EACH EDGE	REMARKS
TS 6x6x1/4	8"	

NOTE:
ALL WELD LENGTHS TO GUSSET PLATE ARE 3/8" FILLET AT ALL FOUR EDGES.

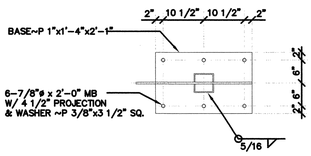

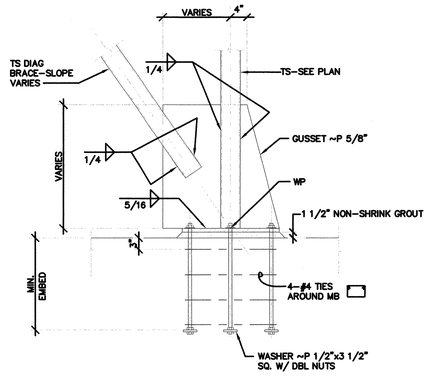

DETAIL | NONE | 12

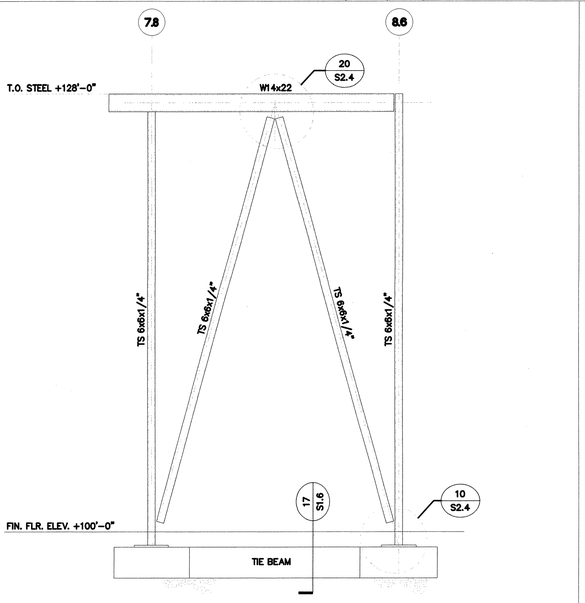

BRACED FRAME ELEVATION | 1/4" | 18

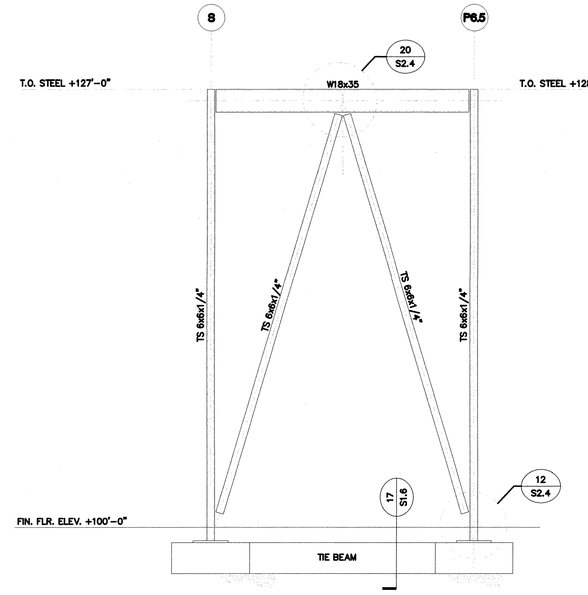

BRACED FRAME ELEVATION | 1/4" | 10

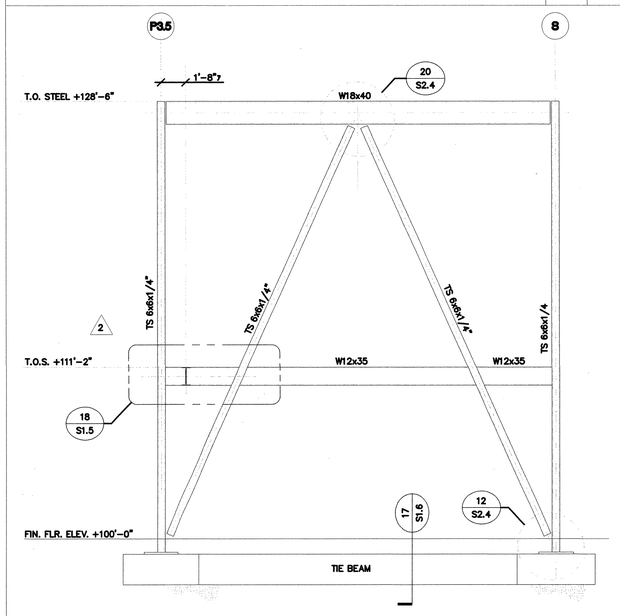

BRACED FRAME ELEVATION | 1/4" | 17

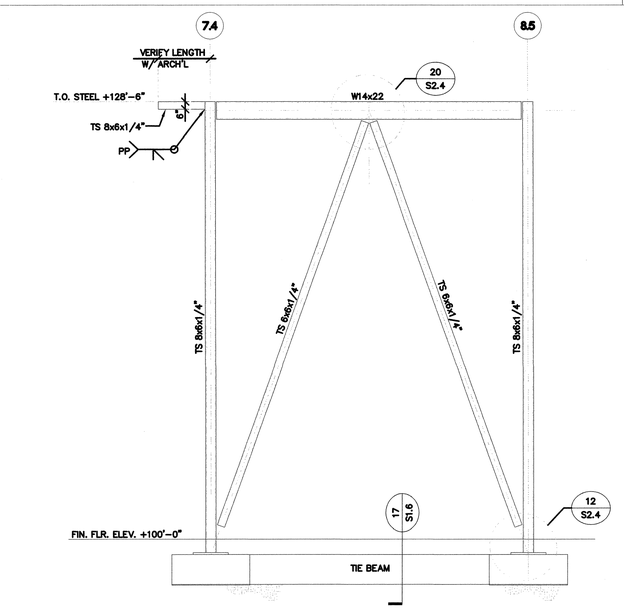

BRACED FRAME ELEVATION | 1/4" | 9

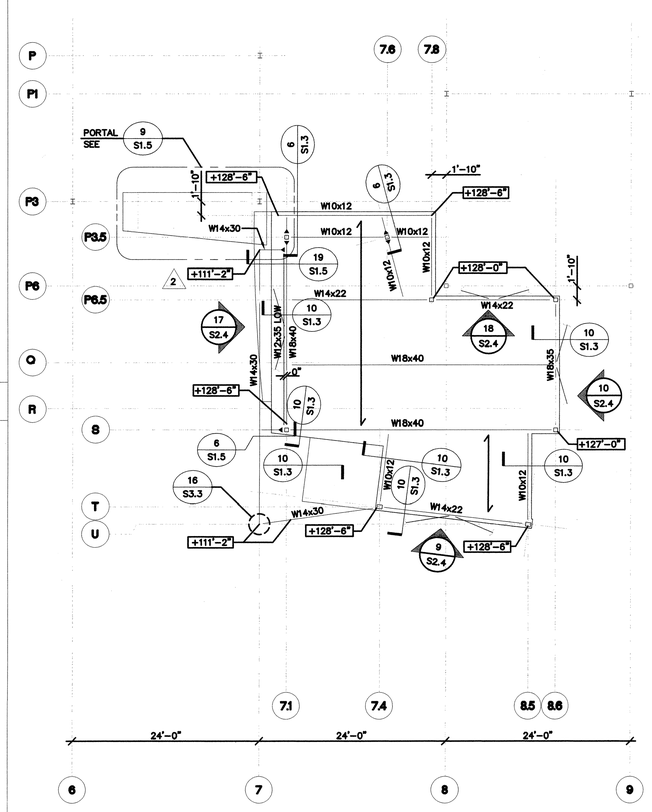

ROOF FRAMING PLAN NOTES

1. SEE SHEETS S1.1 THRU S1.5 FOR GENERAL NOTES AND TYPICAL DETAILS
2. FINISH GROUND FLOOR IS AT ELEVATION +100'–0" TOP OF STEEL ELEVATION AT ROOF VARIES, SEE PLAN FOR TOP OF STEEL AS REFERENCED TO GROUND FLOOR NOTED THUS: +0'–0" OR –0'–0"
3. SEE ARCHITECTURAL DRAWINGS FOR DIMENSIONS AND ELEVATIONS NOT SHOWN OR NOTED.
4. TYPICAL ROOF DIAPHRAGM IS 1 1/2" METAL DECK. INDICATES DIRECTION OF DECKING. SEE 18 S1.3

PARTIAL ROOF FRAMING PLAN | 1/8" | 3

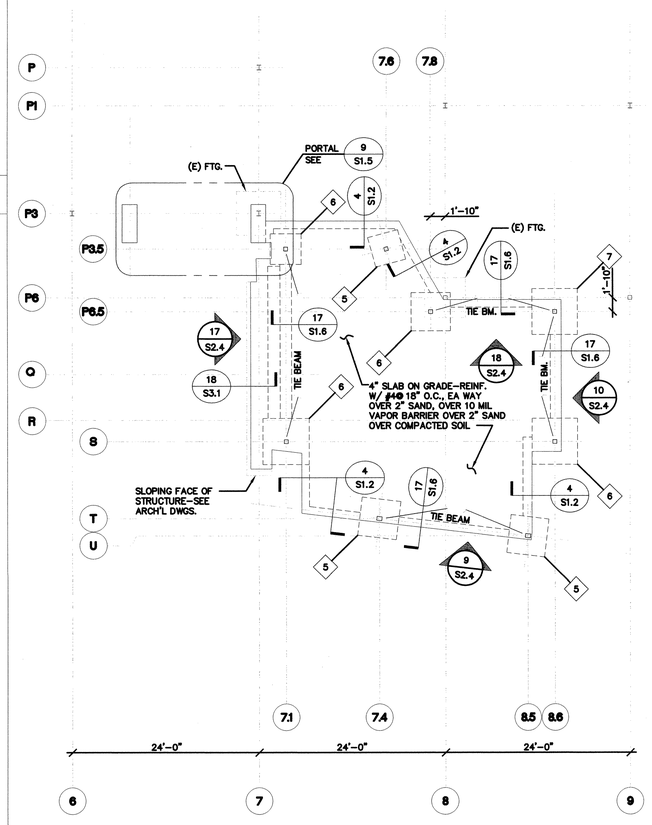

FOUNDATION PLAN NOTE:

1. SEE SHEETS S1.1 THRU S1.5 FOR GENERAL NOTES AND TYPICAL DETAILS
2. SEE ARCHITECTURAL DRAWINGS FOR DIMENSIONS & NOTES NOT SHOWN ON PLAN.
3. CONTRACTOR SHALL VERIFY ALL EXISTING DIMENSIONS & CONDITIONS PRIOR TO START OF WORK.
4. (N) DENOTES NEW CONSTRUCTION, ALL OTHER IS (E) EXISTING TO REMAIN.
5. TOP OF CONCRETE SLAB AT GROUND FLOOR IS DATUM AT +100'–0" ALL ELEVATIONS REFERENCED TO DATUM ARE NOTED THUS: +0'–0" OR –0'–0".
6. LOCATIONS OF INTERIOR PARTITIONS, DEPRESSED SLABS AND SLOPED ARE FOR REFERENCE ONLY. SEE ARCHITECTURAL DRAWINGS FOR DIMENSIONED LOCATIONS.
7. SEE DETAIL CO–ORDINATE FOR DEPRESSED SLAB, EXTENT WITH ARCH'L DRAWINGS–SEE DETAIL 19 S1.2
8. INDICATES FOOTING PAD SEE DETAIL FOR SCHEDULE. 19 S1.2

PARTIAL FOUNDATION PLAN | 1/8" | 1

ALL IDEAS, DESIGN, ARRANGEMENTS AND PLANS INDICATED OR REPRESENTED BY THIS DRAWING ARE OWNED BY, AND THE PROPERTY OF CARRIER JOHNSON AND WERE CREATED, EVOLVED AND DEVELOPED FOR USE ON, AND IN CONNECTION WITH THIS PROJECT. NONE OF SUCH IDEAS, DESIGN, ARRANGEMENTS, OR PLANS SHALL BE USED BY, OR DISCLOSED TO ANY PERSON, FIRM, OR CORPORATION FOR ANY PURPOSE WHATSOEVER WITHOUT THE WRITTEN PERMISSION OF CARRIER JOHNSON. FILING THESE DRAWINGS OR SPECIFICATIONS WITH ANY PUBLIC AGENCY IS NOT A PUBLICATION OF SAME. NO COPYING, REPRODUCTION OR USE THEREOF IS PERMISSIBLE WITHOUT THE CONSENT OF CARRIER JOHNSON.

CARRIER JOHNSON
ARCHITECTURE
INTERIOR DESIGN
PLANNING
GORDON R. CARRIER AIA
MICHAEL C. JOHNSON AIA
WILLIAM C. BOCKEN AIA
DEBORAH P. ELLIOTT IIDA
2600 MICHELSON DRIVE
SUITE 400
IRVINE, CALIFORNIA
92612
TEL 949 955-2353
FAX 949 955-2377
1301 THIRD AVENUE
SAN DIEGO, CALIFORNIA
92101
TEL 619 239-2353
FAX 619 239-6227

REGISTERED PROFESSIONAL ENGINEER
JEFFREY A. ROESSLER
No. C 32466
Exp. 12–31–04
CIVIL
STATE OF CALIFORNIA

rdg
ROESSLER DESIGN GROUP
4050 Barranca Parkway, Suite 205
Irvine, California 92604
(949) 551-5111

ONTARIO PD:: HEADQUARTERS

2534 S. ARCHIBALD AVE., ONTARIO, CALIFORNIA 91761

5 Addendum 5 04.21.2003
2 Addendum 2/Bldg. Dept. Re-Submittal 03.20.2003
Building Dept. Submittal 02.24.2003
ISSUES:

DIRECTORY/FILE NUMBER:
XREF'S DRAWINGS:
PROJECT NUMBER: 4511.00
DRAWN BY: CHECKED BY:
DATE:
SCALE: AS NOTED
TITLE: PARTIAL FDN., ROOF FRAMING, FRAME ELEV. AND DETAILS

DRAWING NO: S2.4

ALL IDEAS, DESIGN, ARRANGEMENTS AND PLANS INDICATED OR REPRESENTED BY THIS DRAWING ARE OWNED BY, AND THE PROPERTY OF CARRIER JOHNSON, AND WERE CREATED, EVOLVED AND DEVELOPED FOR USE ON, AND IN CONNECTION WITH THIS PROJECT. NONE OF SUCH IDEAS, DESIGN, ARRANGEMENTS, OR PLANS SHALL BE USED BY, OR DISCLOSED TO ANY PERSON, FIRM, OR CORPORATION FOR ANY PURPOSE WHATSOEVER WITHOUT THE WRITTEN PERMISSION OF CARRIER JOHNSON. FILING THESE DRAWINGS OR SPECIFICATIONS WITH ANY PUBLIC AGENCY IS NOT A PUBLICATION OF SAME. NO COPYING, REPRODUCTION OR USE THEREOF IS PERMISSIBLE WITHOUT THE CONSENT OF CARRIER JOHNSON.

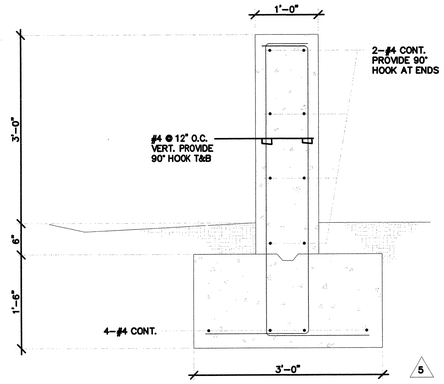

DETAIL-MONUMENT SIGN WALL | NONE | 20

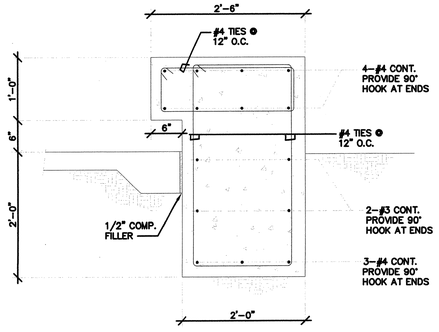

DETAIL-CONCRETE BENCH | NONE | 19

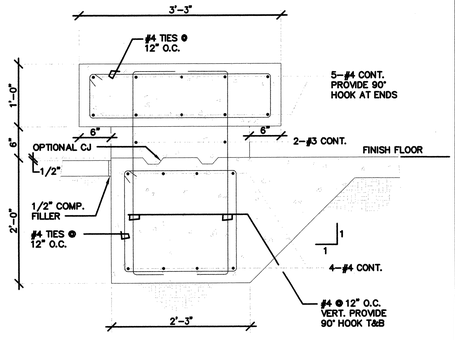

DETAIL-CONCRETE BENCH | NONE | 18

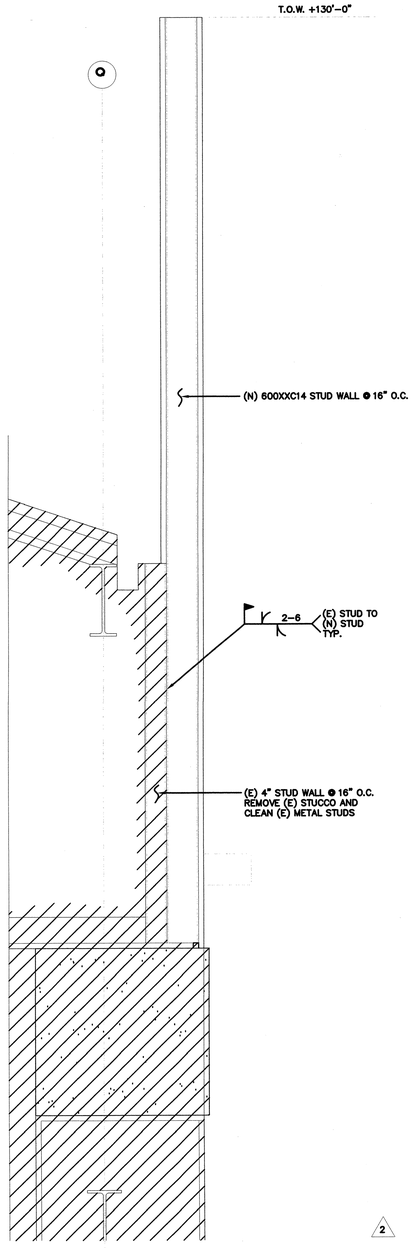

SECTION | NONE | 14

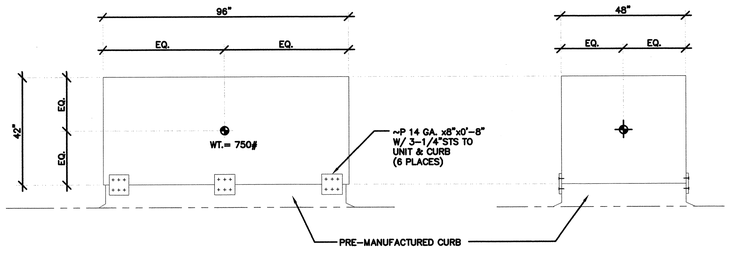

AHU ANCHORAGE | NONE | 13

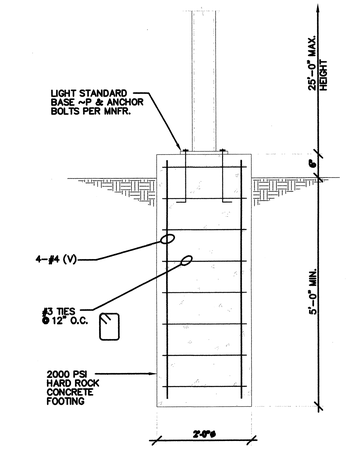

NOTE: MAINTAIN REINFORCEMENT CLEAR COVER OF 3" MIN.

LIGHT POLE FOUNDATION | NONE | 11

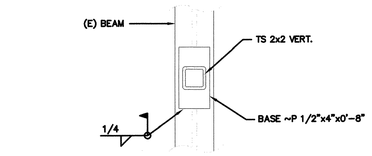

SECTION "A"

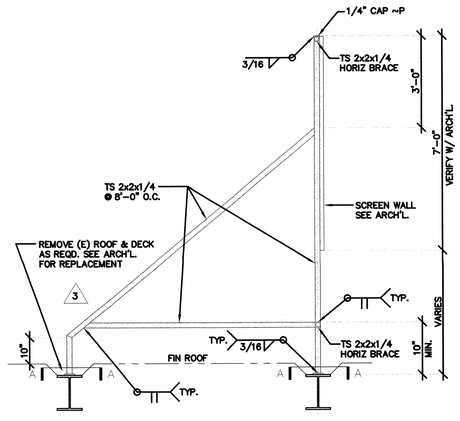

ROOF SCREEN DETAIL | 1" | 9

TAPERED GIRDER SCHEDULE

MARK	TYPE	FLANGE SIZE	WEB THICKNESS	HEEL HT. "h"	MAX. HT. "H"	CAMBER	SPECIAL WELD LENGTH Y	SPECIAL WELD LENGTH W	SPECIAL WELD LENGTH DET.	REMARKS
TG-1	A	6 1/2"x1/2"	1/4	14	41	1"	1'-6"	6'-6"		
TG-2	A	7 1/2"x1/2"	1/4	14	46	1"	1'-6"	6'-6"		
TG-3	A	6"x1/2"	1/4	14	38	1"	1'-6"	6'-6"		
TG-4	A	7"x1/2"	1/4	14	42	1"	1'-6"	6'-6"		
TG-5	A	6"x1/2"	1/4	14	40	1"	1'-6"	6'-6"		
TG-6	A	10"x5/8"	1/4	16	53	1"	1'-6"	6'-6"		
TG-7	A	9 1/2"x1/2"	1/4	14	51	1"	1'-6"	6'-6"		
TG-8	A	10"x3/4"	1/4	16	55	1"	1'-6"	6'-6"		
TG-9	A	9"x1/2"	1/4	14	51	1"	1'-6"	6'-6"		
TG-10	A	10"x3/4"	1/4	16	52	1"	1'-6"	6'-6"		
TG-11	A	7"x1/2"	1/4	14	45	1"	1'-6"	6'-6"		
TG-12	A	10"x1/2"	1/4	14	52	1"	1'-6"	6'-6"		
TG-13	A	8"x1/2"	1/4	14	47	1"	1'-6"	6'-6"		
TG-14	A	10"x5/8"	1/4	16	53	1"	1'-6"	6'-6"		
TG-15	A	9"x5/8"	1/4	16	52	1"	1'-6"	6'-6"		
TG-16										SEE DETAIL 16/S2.3
TG-17	A	6"x1/2"	1/4	14	38	1"	1'-6"	6'-6"		
TG-18	A	6"x1/2"	3/16	13	37	1"	1'-6"	6'-6"		
TG-19	A	6"x1/2"	3/16	13	35	1"	1'-6"	6'-6"		
TG-20	A	6"x1/2"	3/16	13	34	1"	1'-6"	6'-6"		
TG-21	A	6"x1/2"	1/4	16	41	1"	1'-6"	6'-6"		
TG-22	A	6"x1/2"	1/4	14	36	1"	1'-6"	6'-6"		
TG-23	A	8 1/2"x1/2"	1/4	14	46	1"	1'-6"	6'-6"		
TG-24	A	8"x1/2"	1/4	16	44	1"	1'-6"	6'-6"		
TG-25	A	7"x1/2"	1/4	14	44	1"	1'-6"	6'-6"		
TG-26	A	10"x1/2"	1/4	14	52	1"	1'-6"	6'-6"		
TG-27	A	7"x1/2"	1/4	14	45	1"	1'-6"	6'-6"		
TG-28	A	9 1/2"x1/2"	1/4	16	50	1"	1'-6"	6'-6"		
TG-29	A	10"x3/4"	5/16	17	55	1"	1'-6"	6'-6"		
TG-30	A	7"x1/2"	1/4	14	42	1"	1'-6"	6'-6"		
TG-31	A	7"x1/2"	1/4	14	42	1"	1'-6"	6'-6"		PROVIDE 8-3/4"ø HSB AT END CONNECTIONS WITH 1/4" STIFF PLATES SIMILAR TO DETAILS SHOWN ON SHT. S-- FOR BEAM TO COLUMN WEB CONNECTION
TG-32	A	7 1/2"x1/2"	1/4	16	46	1"	1'-6"	6'-6"		
TG-33	A	8 1/2"x1/2"	1/4	16	46	1"	1'-6"	6'-6"		
TG-34	A	9 1/2"x1/2"	1/4	16	52	1"	1'-6"	6'-6"		
TG-35	A	10 1/2"x1/2"	1/4	16	53	1"	1'-6"	6'-6"		

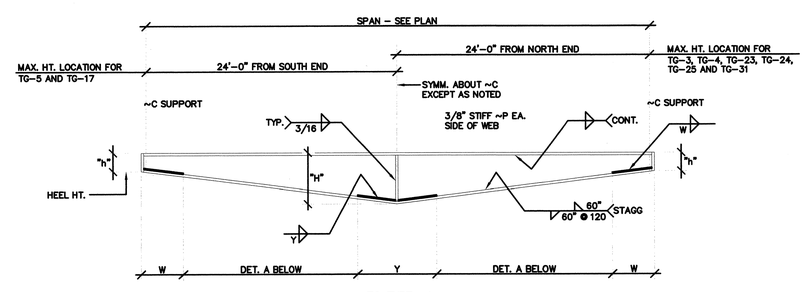

TG. TYPE - A

TG. TYPE - B

SAME AS TYPE-A EXCEPT INVERTED

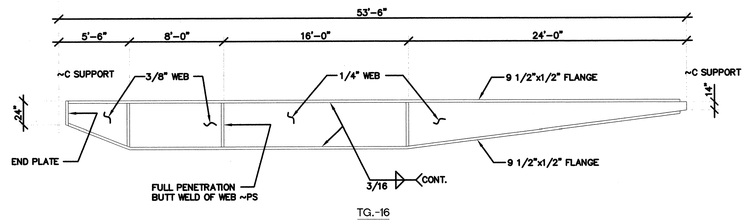

TG.-16

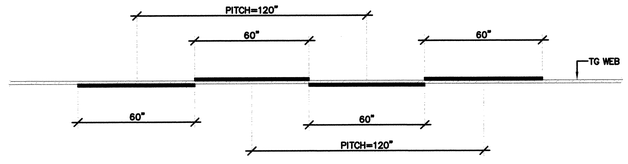

DETAIL A

TYPICAL INTERMEDIATE WELD PATTERN - 3/16" FILLET UNLESS NOTED

TAPERED GIRDER DETAIL AND WELD PATTERN (SHOWN FOR INFORMATION ONLY) | NONE | 1

CARRIER JOHNSON
ARCHITECTURE
INTERIOR DESIGN
PLANNING
GORDON R. CARRIER AIA
MICHAEL C. JOHNSON AIA
WILLIAM C. BOCKEN AIA
DEBORAH P. ELLIOTT IIDA
2600 MICHELSON DRIVE
SUITE 400
IRVINE, CALIFORNIA
92612
TEL 949 955-2353
FAX 949 955-2377
1301 THIRD AVENUE
SAN DIEGO, CALIFORNIA
92101
TEL 619 239-2353
FAX 619 239-6227

REGISTERED PROFESSIONAL ENGINEER JOSEPH A. ROESSLER No. C 32465 Exp. 12-31-04 CIVIL STATE OF CALIFORNIA

rdg
ROESSLER DESIGN GROUP
4680 Barranca Parkway, Suite 209
Irvine, California 92604
(949) 651-5111

ONTARIO PD:: HEADQUARTERS

2534 S. ARCHIBALD AVE., ONTARIO, CALIFORNIA 91761

5 Addendum 5 04.21.2003

2 Addendum 2/Bldg. Dept. Re-Submittal 03.20.2003

Building Dept. Submittal 02.24.2003

ISSUES:

DIRECTORY/FILE NUMBER:

XREF'S DRAWINGS:

PROJECT NUMBER: 45110.00

DRAWN BY: CHECKED BY:

DATE:

SCALE: AS NOTED

TITLE: EXISTING BEAM SCHEDULE & DETAILS

DRAWING NO: S3.1

ALL IDEAS, DESIGN, ARRANGEMENTS AND PLANS INDICATED OR REPRESENTED BY THIS DRAWING ARE OWNED BY, AND THE PROPERTY OF CARRIER JOHNSON, AND WERE CREATED, EVOLVED AND DEVELOPED FOR USE ON, AND IN CONNECTION WITH, THIS PROJECT. NONE OF SUCH IDEAS, DESIGN, ARRANGEMENTS, OR PLANS SHALL BE USED BY, OR DISCLOSED TO ANY PERSON, FIRM, OR CORPORATION FOR ANY PURPOSE WHATSOEVER WITHOUT THE WRITTEN PERMISSION OF CARRIER JOHNSON. NO COPYING, REPRODUCTION OR USE THEREOF IS PERMISSIBLE WITHOUT THE CONSENT OF CARRIER JOHNSON. FILING THESE DRAWINGS OR SPECIFICATIONS WITH ANY PUBLIC AGENCY IS NOT A PUBLICATION OF SAME.

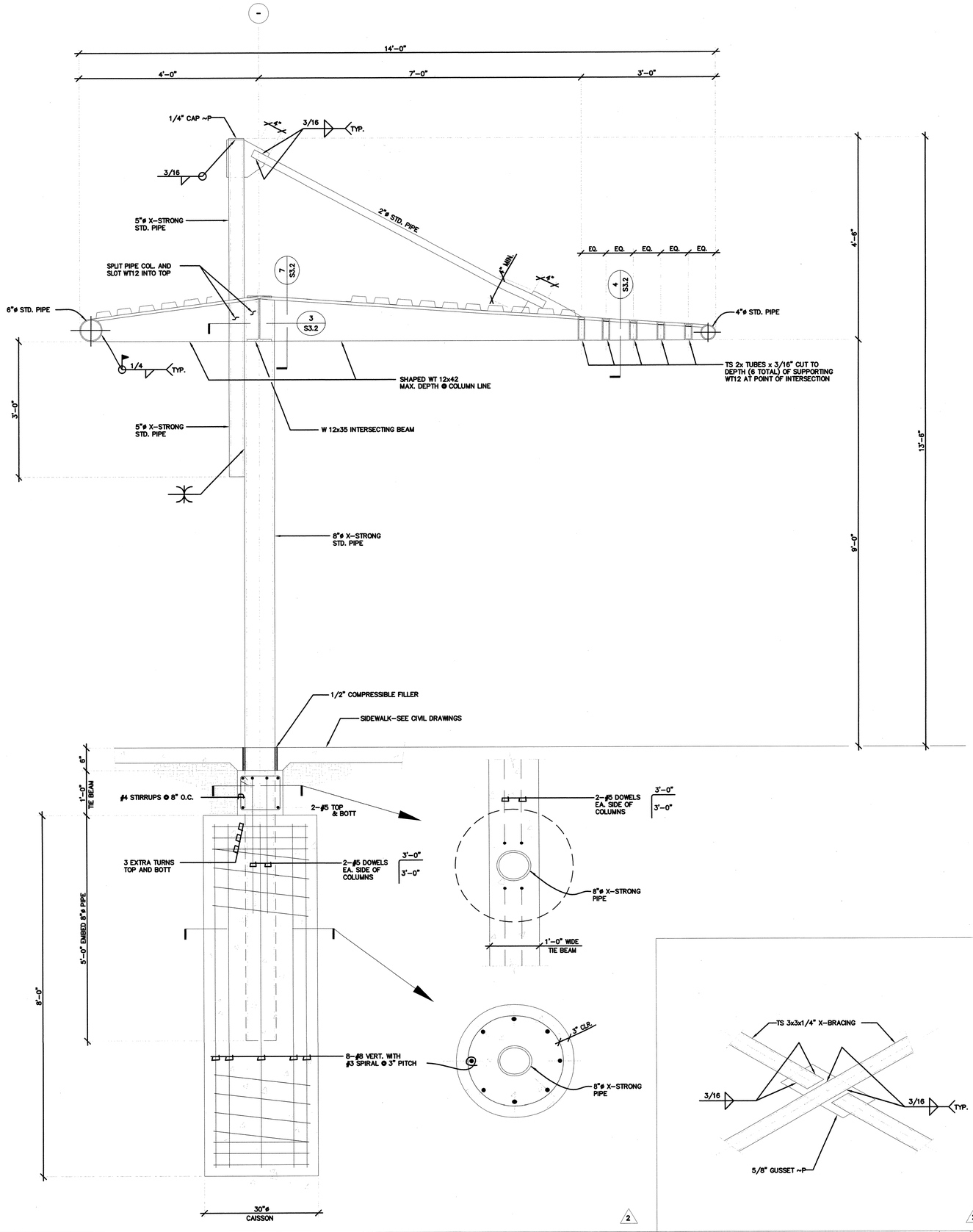

SECTION - ELEVATION | 1" | 13

DETAIL | NONE | 9

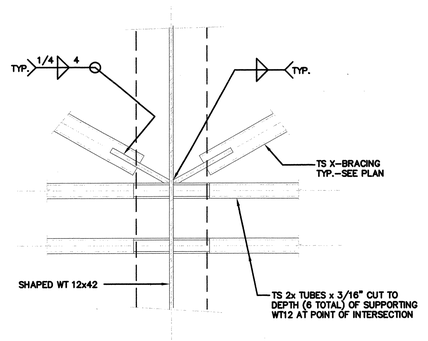

DETAIL | 1 1/2" | 8

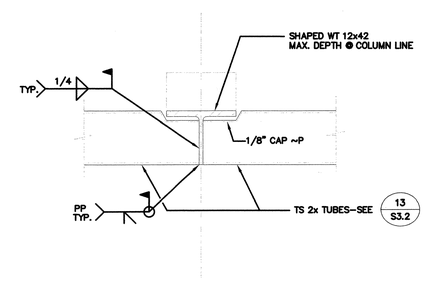

DETAIL | NONE | 4

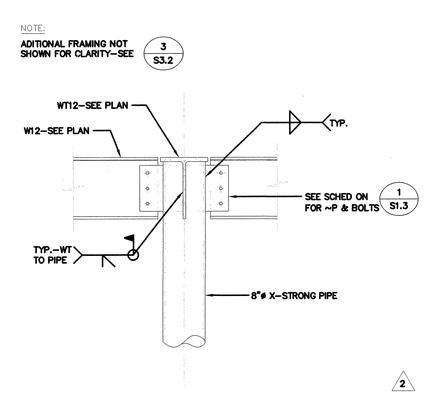

DETAIL | 1" | 7

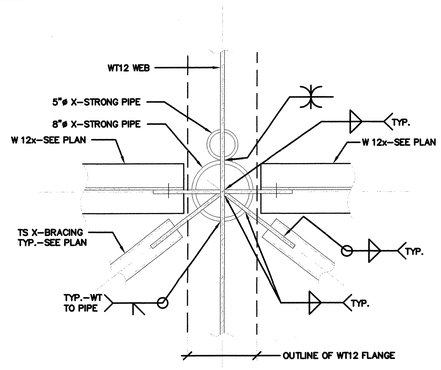

DETAIL | 1 1/2" | 3

ROOF FRAMING PLAN NOTES

1. SEE SHEETS S1.1 THRU S1.5 FOR GENERAL NOTES AND TYPICAL DETAILS
2. FINISH GROUND FLOOR IS AT ELEVATION +100'-0" TOP OF STEEL ELEVATION AT ROOF VARIES, SEE PLAN FOR TOP OF STEEL AS REFERENCED TO GROUND FLOOR NOTED THUS: +0'-0" OR -0'-0"
3. SEE ARCHITECTURAL DRAWINGS FOR DIMENSIONS AND ELEVATIONS NOT SHOWN OR NOTED.
4. TYPICAL ROOF DIAPHRAGM IS 1 1/2" METAL DECK. INDICATES DIRECTION OF DECKING. SEE 18 S1.3

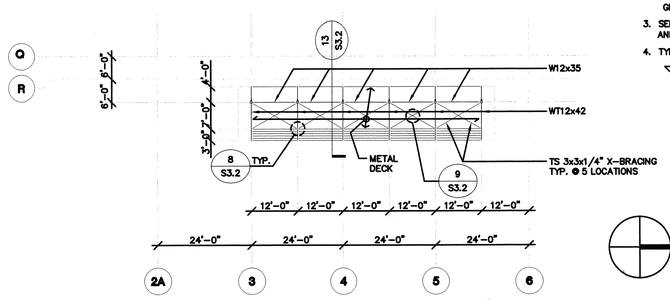

ROOF FRAMING PLAN | 1/16" | 2

FOUNDATION PLAN NOTE:

1. SEE SHEETS S1.1 THRU S1.5 FOR GENERAL NOTES AND TYPICAL DETAILS
2. SEE ARCHITECTURAL DRAWINGS FOR DIMENSIONS & NOTES NOT SHOWN ON PLAN.
3. CONTRACTOR SHALL VERIFY ALL EXISTING DIMENSIONS & CONDITIONS PRIOR TO START OF WORK.
4. TOP OF CONCRETE SLAB AT GROUND FLOOR IS DATUM AT +100'-0" ALL ELEVATIONS REFERENCED TO DATUM ARE NOTED THUS: +0'-0" OR -0'-0".

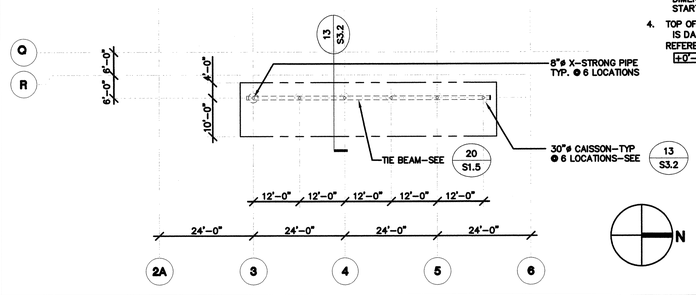

FOUNDATION PLAN | 1/16" | 1

CARRIER JOHNSON
ARCHITECTURE
INTERIOR DESIGN
PLANNING
GORDON R. CARRIER AIA
MICHAEL C. JOHNSON AIA
WILLIAM C. BOCKEN AIA
DEBORAH P. ELLIOTT IIDA
2600 MICHELSON DRIVE
SUITE 400
IRVINE, CALIFORNIA
92612
TEL 949 955-2353
FAX 949 955-2377
1301 THIRD AVENUE
SAN DIEGO, CALIFORNIA
92101
TEL 619 239-2353
FAX 619 239-6227

REGISTERED PROFESSIONAL ENGINEER JEFFREY A. ROESSLER No. C 32466 Exp. 12-31-04 CIVIL STATE OF CALIFORNIA

rdg
ROESSLER DESIGN GROUP
4680 Barranca Parkway, Suite 208
Irvine, California 92604
(949) 651-8111

ONTARIO PD: HEADQUARTERS

2534 S. ARCHIBALD AVE., ONTARIO, CALIFORNIA 91761

2 Addendum 2/Bldg. Dept. Re-Submittal 03.20.2003
Building Dept. Submittal 02.24.2003
ISSUES:

DIRECTORY/FILE NUMBER:
XREF'S DRAWINGS:
PROJECT NUMBER: 4511.00
DRAWN BY: CHECKED BY:
DATE:
SCALE: AS NOTED
TITLE: STEEL CANOPY AND DETAILS

DRAWING NO: S3.2

ALL IDEAS, DESIGN, ARRANGEMENTS AND PLANS INDICATED OR REPRESENTED BY THIS DRAWING ARE OWNED BY AND THE PROPERTY OF CARRIER JOHNSON AND WERE CREATED, EVOLVED AND DEVELOPED FOR USE ON, AND IN CONNECTION WITH THIS PROJECT. NONE OF SUCH IDEAS, DESIGN, ARRANGEMENTS, OR PLANS SHALL BE USED BY, OR DISCLOSED TO ANY PERSON, FIRM, OR CORPORATION FOR ANY PURPOSE WHATSOEVER WITHOUT THE WRITTEN PERMISSION OF CARRIER JOHNSON. FILING THESE DRAWINGS OR SPECIFICATIONS WITH ANY PUBLIC AGENCY IS NOT A PUBLICATION OF SAME. NO COPYING, REPRODUCTION OR USE THEREOF IS PERMISSIBLE WITHOUT THE CONSENT OF CARRIER JOHNSON.

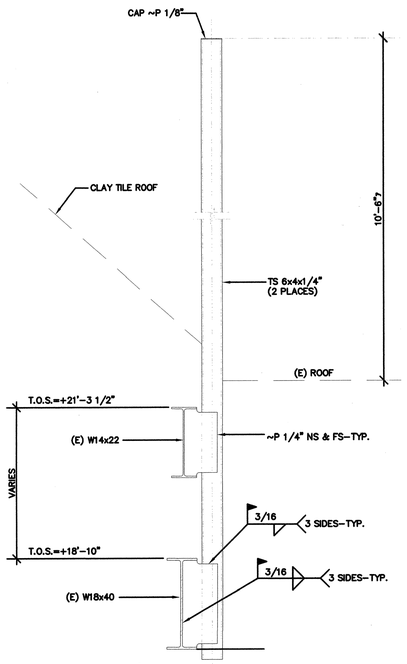

DETAIL | NONE | 19

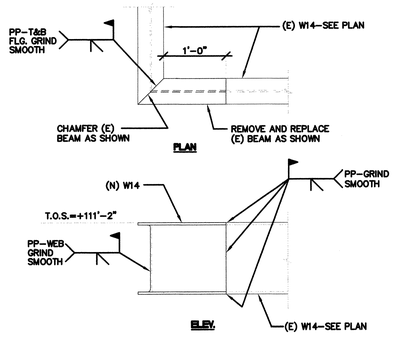

DETAIL | NONE | 16

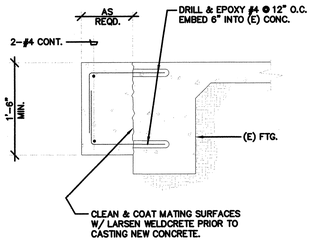

DETAIL | NONE | 15

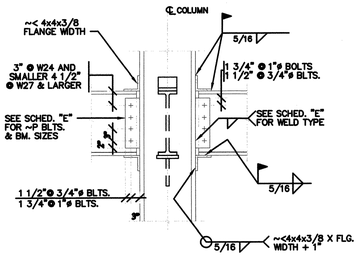

NOTE:
1. CONNECTION SHOWN IS TYPICAL UNLESS SPECIFICALLY DETAILED OTHERWISE.
2. WELD SIZE SHOWN IN SCHEDULE IS MIN. WELD REQ'D. FOR APPLIED LOADING WHERE FLANGE THICKNESS OF COL. IS GREATER THAN 3/4", USE 5/16" MIN. WELDS.

SCHEDULE "E"

BM. SIZE	BEAM TO COL. FLANGE ~P THICKNESS	A325-SC BOLTS	FILLET WELD	REMARKS
W8, W10	5/16"	2-3/4" ø	5/16"	
W12, W14	5/16"	3-3/4" ø		
W16	5/16"	4-3/4" ø		
W18	3/8"	5-3/4" ø		
W21	3/8"	6-3/4" ø		
W24, W27	1/2"	7-3/4" ø	5/16"	
W30	5/8"	8-1" ø	3/8"	
W33	5/8"	9-1" ø	7/16"	
W36	5/8"	10-1" ø	7/16"	

TYP. BEAM CONNECTION | NONE | 11

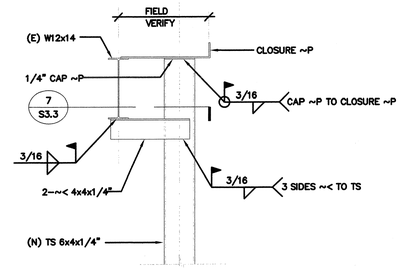

DETAIL | 1" | 8

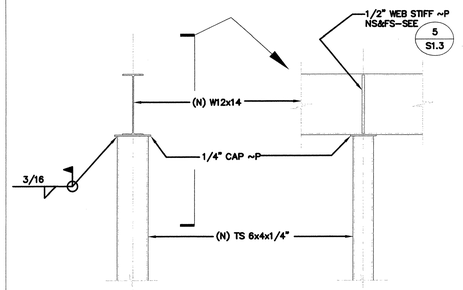

DETAIL | 1" | 4

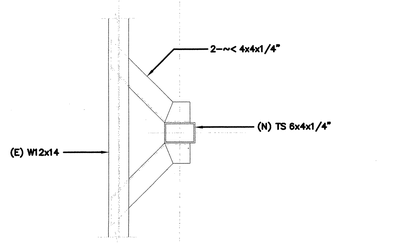

DETAIL | 1" | 7

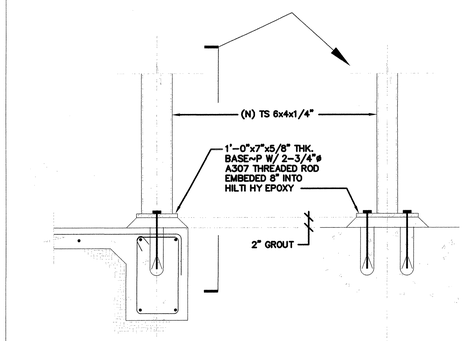

DETAIL | 1" | 3

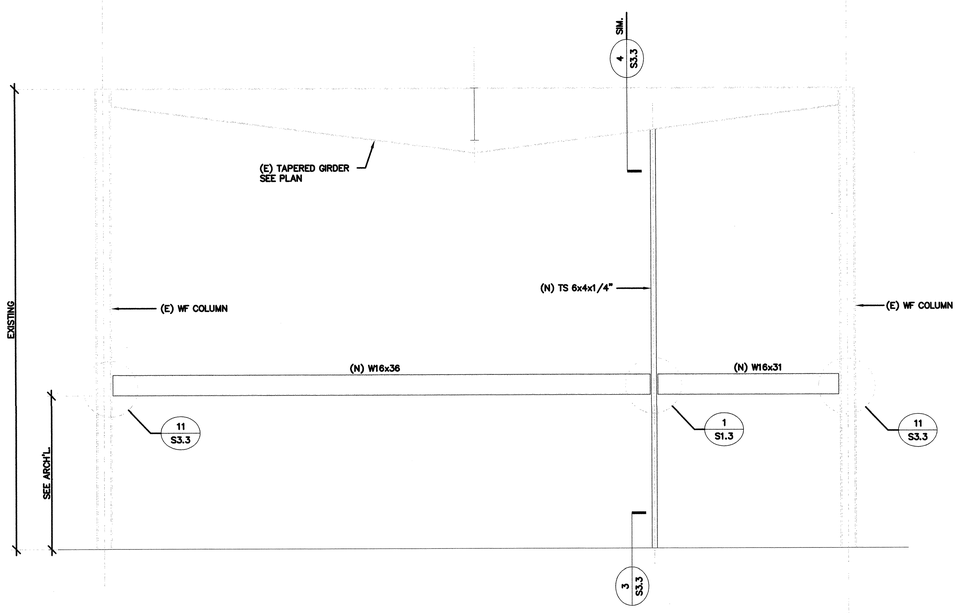

ELEVATION • GRID LINE 13 | 1/4" | 9

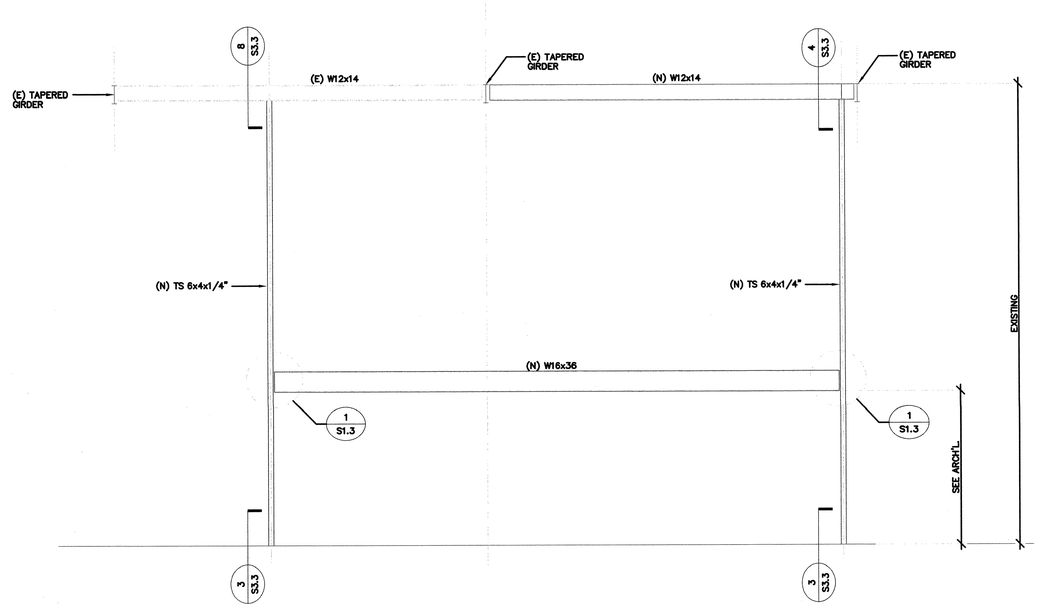

ELEVATION NEAR GRID LINE 8 | 1/4" | 1

ARCHITECTURE
INTERIOR DESIGN
PLANNING

CARRIER JOHNSON

GORDON R. CARRIER AIA
MICHAEL C. JOHNSON AIA
WILLIAM C. BOCKEN AIA
DEBORAH P. ELLIOTT IIDA

2600 MICHELSON DRIVE
SUITE 400
IRVINE, CALIFORNIA
92612
TEL 949 955-2353
FAX 949 955-2377

1301 THIRD AVENUE
SAN DIEGO, CALIFORNIA
92101
TEL 619 239-2353
FAX 619 239-6227

REGISTERED PROFESSIONAL ENGINEER
JEFFREY A. ROESSLER
No. C 32466
Exp. 12-31-04
CIVIL
STATE OF CALIFORNIA

rdg
ROESSLER DESIGN GROUP
4650 Barranca Parkway, Suite 205
Irvine, California 92604
(949) 651-5111

ONTARIO PD:: HEADQUARTERS

2534 S. ARCHIBALD AVE., ONTARIO, CALIFORNIA 91761

2 Addendum 2/Bldg. Dept. Re-Submittal 03.20.2003
Building Dept. Submittal 02.24.2003
ISSUES:

DIRECTORY/FILE NUMBER:
XREF'S DRAWINGS:
PROJECT NUMBER: 4511.00
DRAWN BY: CHECKED BY:
DATE:
SCALE: AS NOTED
TITLE: ELEVATIONS AND DETAILS

DRAWING NO:
S3.3

EXISTING PACKAGED ROOFTOP VAV AIR CONDITIONING UNIT SCHEDULE

NO.	MANUFACTURER & MODEL NO.	SUPPLY FAN CFM	SUPPLY FAN T.S.P.	SUPPLY FAN RPM	SUPPLY FAN HP	EXHAUST FAN CFM	EXHAUST FAN T.S.P.	EXHAUST FAN NO OF	EXHAUST FAN HP	ELECTRICAL DATA V / Ph / Hz	ELECTRICAL DATA FLA	ELECTRICAL DATA MCA	ELECTRICAL DATA MFS	COOLING CAPACITY MBH TOTAL	COOLING CAPACITY MBH SENSIBLE	COOLING CAPACITY MBH E.A.T.	COOLING CAPACITY MBH L.A.T.	COIL DATA SUCTION TEMP	COIL DATA ROWS FINS	COIL DATA FACE AREA	FILTERS TYPE	FILTERS QTY.	FILTERS SIZE	REMARKS	SERVICE	OPER. WT. (LBS.)
AC 1	EXISTING CARRIER 48 DF-064	20,000 5,100 OSA	2"	1239	20	-	-	2	3 EA.	460/3/60	138	151	200	552.0	552.0	86°F Db 65°F Wb	-	-	4 15	35.4 #	THROW-AWAY	9 21	20"x25"x2 16"x25"x2	RETROFIT FOR V.A.V. OPERATION AIR ECONOMIZER AND REMOVE GAS FURNACE SECTION	ENTRY LOBBY & INVEST. OFFICES	1300
AC 2	EXISTING CARRIER 48 DF-064	20,000 5,100 OSA	2"	1239	20	-	-	2	3 EA.	460/3/60	138	151	200	552.0	552.0	86°F Db 65°F Wb	-	-	4 15	35.4 #	THROW-AWAY	9 21	20"x25"x2 16"x25"x2	RETROFIT FOR V.A.V. OPERATION AIR ECONOMIZER AND REMOVE GAS FURNACE SECTION	MULTIPURPOSE COPS & GANGS & TRAINING AREAS	1300
AC 3	EXISTING CARRIER 48 DF-064	20,000 5,100 OSA	2"	1239	20	-	-	2	3 EA.	460/3/60	138	151	200	552.0	552.0	86°F Db 65°F Wb	-	-	4 15	35.4 #	THROW-AWAY	9 21	20"x25"x2 16"x25"x2	RETROFIT FOR V.A.V. OPERATION AIR ECONOMIZER AND REMOVE GAS FURNACE SECTION	CAPTAIN AREA AND TRAFFIC OFFICE AREAS	1300
AC 4	EXISTING CARRIER 48 DF-064	20,000 5,100 OSA	2"	1239	20	-	-	2	3 EA.	460/3/60	138	151	200	552.0	552.0	86°F Db 65°F Wb	-	-	4 15	35.4 #	THROW-AWAY	9 21	20"x25"x2 16"x25"x2	RETROFIT FOR V.A.V. OPERATION AIR ECONOMIZER AND REMOVE GAS FURNACE SECTION	FITNESS / LOCKERS AREAS	1300
AC 5	EXISTING CARRIER 48 DF-064	20,000 5,100 OSA	2"	1239	20	-	-	2	3 EA.	460/3/60	138	151	200	552.0	552.0	86°F Db 65°F Wb	-	-	4 15	35.4 #	THROW-AWAY	9 21	20"x25"x2 16"x25"x2	RETROFIT FOR V.A.V. OPERATION AIR ECONOMIZER AND REMOVE GAS FURNACE SECTION	HOLDING AREA BRIEF RM. AND PATROL OFFICES	1300
AC 6	EXISTING CARRIER 48 DF-064	20,000 5,100 OSA	2"	1239	20	-	-	2	3 EA.	460/3/60	138	151	200	552.0	552.0	86°F Db 65°F Wb	-	-	4 15	35.4 #	THROW-AWAY	9 21	20"x25"x2 16"x25"x2	RETROFIT FOR V.A.V. OPERATION AIR ECONOMIZER AND REMOVE GAS FURNACE SECTION	RECORDS & FORENSICS OFFICES	1300
AC 7	EXISTING CARRIER 48 DF-034	12,000 1,920 OSA	2"	1212	10	-		1	3	460/3/60	83.7	91	110	348.0	348.0	86°F Db 64°F Wb	-	-	4 15	24.8 #	THROW-AWAY	9 12	20"x25"x2 16"x25"x2	RETROFIT FOR V.A.V. OPERATION AIR ECONOMIZER AND REMOVE GAS FURNACE SECTION	MEZZ. LEVEL OFFICE AREA	5300

PACKAGED ROOFTOP GAS / ELECTRIC AIR CONDITIONING UNIT SCHEDULE

NO.	MANUFACTURER & MODEL NO.	SUPPLY FAN CFM	SUPPLY FAN E.S.P.	SUPPLY FAN RPM	SUPPLY FAN BHP	COOLING CAP. & A.R.I. (MBH) TOTAL	COOLING CAP. & A.R.I. (MBH) SENSIBLE	COOLING CAP. & A.R.I. (MBH) EER	HEATING CAPACITY (BTU/HR) INPUT	HEATING CAPACITY (BTU/HR) OUTPUT	HEATING CAPACITY (BTU/HR) AFUE	ELECTRICAL DATA V / Ph / Hz	ELECTRICAL DATA FLA	ELECTRICAL DATA MCA	ELECTRICAL DATA MFS	2" FILTERS TYPE	2" FILTERS QTY.	2" FILTERS SIZE	REMARKS	SERVICE	OPER. WT. (LBS.)
AC 8	CARRIER 48TMD025-601	7,200 550 OSA	1"	1211	6.0	212.9	155.5	9.5	206,000 / 275,000	223,000	0.81	460/3/60	56.1	61.0	80.0	THROW-AWAY	4 4	20"x20" 16"x20"	WITH ROOF CURB, AIR ECONOMIZER AND ROOM THERMOSTAT (24-HR OPERATION)	DISPATCH AREA	2,300

PACKAGED ROOFTOP COOLING UNIT SCHEDULE

NO.	MANUFACTURER & MODEL NO.	AMB.	SUPPLY FAN CFM	SUPPLY FAN E.S.P.	SUPPLY FAN RPM	COOLING CAPACITY (MBH) & A.R.I. BHP	COOLING CAPACITY (MBH) & A.R.I. TOTAL	COOLING CAPACITY (MBH) & A.R.I. SENSIBLE	COOLING CAPACITY (MBH) & A.R.I. EER	ELECTRICAL DATA V / Ph / Hz	ELECTRICAL DATA FLA	ELECTRICAL DATA MCA	ELECTRICAL DATA MFS	2" FILTERS TYPE	2" FILTERS QTY.	2" FILTERS SIZE	REMARKS	SERVICE	OPER. WT. (LBS.)
AC 9	CARRIER 50TJQ016-601	105	6,000 300 OSA	1"	956	3.1	166.9	145.3	9.7	460/3/60	40.5	41.0	50.0	THROW-AWAY	4 4	20"x20" 16"x20"	WITH ROOF CURB, AIR ECONOMIZER AND ROOM THERMOSTAT (24-HR OPERATION)	COMPUTER ROOMS	2,100
AC 10	CARRIER 50TFQD06-601	105	1,900 90 OSA	1"	1226	1.3	57.3	41.3	10.0 SEER	460/3/60	10.8	12.7	15.0	THROW-AWAY	2	16"x25"	WITH ALTERNATE MOTOR, BELT DRIVE AND ROOM THERMOSTAT (24-HR OPERATION)	COMM. ROOM	400
AC 11	CARRIER 50TFQD06-601	105	1,900 90 OSA	1"	1226	1.3	57.3	41.3	10.0 SEER	460/3/60	10.8	12.7	15.0	THROW-AWAY	2	16"x25"	WITH ALTERNATE MOTOR, BELT DRIVE AND ROOM THERMOSTAT (24-HR OPERATION)	COMM. ROOM	400

BOILER SCHEDULE

NO.	MANUFACTURER & MODEL NO.	TYPE	CAPACITY MBH INPUT	CAPACITY MBH OUTPUT	EFF. %	FUEL	CONN.	VOLTAGE V / Ph / Hz	BLOWER	REMARKS	SERVICE	OPER. WT. (LBS.)
B 1	RAYPAK LOW NOx 1262	HI DELTA SERIES	1260	1058	84	GAS	2" GAS 2½" WTR	120/1/60	1/4 HP (2-EACH)	C.E.C. APPROVED, CALIFORNIA GAS TRAIN AND CONTROLS, PRESSURE RELIEF VALVE, PRESSURE-TEMPERATURE GAUGE, INTEGRAL CIRCULATION PUMP UNIT MOUNTED FLOW SWITCH, OUTDOOR RESET, ELECTRONIC IGNITION AND (4-STAGE FIRING).	BLDG. HEATING	1200

EXPANSION TANK SCHEDULE

NO.	MANUFACTURER & MODEL NO.	TYPE	TANK VOL.	SIZE	ACCEPTANCE SIZE	REMARKS	SERVICE	OPER. WT. (LBS.)
ET 1	TACO	BLADDER A.S.M.E.	40 GAL	16"ø x 56"L	40 GAL.	AIRTROL FITTING, COMBINATION DRAIN & CHARGING VALVE, SIGHTGLASS AND VALVE.	BLDG. HEATING	500

PUMP SCHEDULE

NO.	MANUFACTURER & MODEL NO.	TYPE	GPM	HEAD	RPM	HP	VOLTAGE V - Ph - Hz	REMARKS	SERVICE	OPER. WT. (LBS.)
P 1	TACO CE1508	CENTRIFUGAL FRAME MOUNTED	56	70 FT.	1750	3	460-3-60	T.E.F.C. MOTOR, NON-OVERLOADING, HIGH EFF. MOTOR, BRONZE FITTED, MECHANICAL SEAL	BLDG. HEATING	240

SPLIT SYSTEM OUTDOOR UNIT

NO.	MANUFACTURER & MODEL NO.	AMB.	COOLING CAP. (BTU/HR)	ELECTRICAL DATA V / Ph / HZ	ELECTRICAL DATA F.L.A.	ELECTRICAL DATA M.C.A.	ELECTRICAL DATA FUSE	LIQUID LINE	VAPOR LINE	REMARKS	OPER. WT. (LBS.)
CU 1	CARRIER 38HDC048	105	51,300 TOTAL	460/3/60	8.0	11.1	15.0	3/8"	7/8"	WITH FILTERS, DRIER AND SIGHT GLASS (24-HR OPERATION)	210
CU 2	CARRIER 38HDC036	105	33,800 TOTAL	460/3/60	6.1	7.5	15.0	3/8"	7/8"	WITH FILTERS, DRIER AND SIGHT GLASS (24-HR OPERATION)	180

SPLIT SYSTEM INDOOR UNIT

NO.	MANUFACTURER & MODEL NO.	FAN DATA CFM	FAN DATA E.S.P.	FAN DATA H.P.	ELECTRICAL DATA V / Ph / HZ	ELECTRICAL DATA F.L.A.	ELECTRICAL DATA M.C.A.	ELECTRICAL DATA FUSE	REMARKS	SERVICE	OPER. WT. (LBS.)
FC 1	CARRIER FB4ANF048	1400	Ø.5"	3/4	208-230/1/60	4.3	5.4	15.0	WITH ROOM THERMOSTAT (24-HR OPERATION)	CONF. ROOM	250
FC 2	CARRIER FB4ANF036	1200	Ø.5"	1/2	208-230/1/60	2.7	3.4	15.0	WITH ROOM THERMOSTAT (24-HR OPERATION)	DATA ROOM	220

VAV BOX SCHEDULE

NO.	MANUFACTURER & MODEL NO.	CFM RANGE	MAXIMUM CFM	MINIMUM CFM	INLET SIZE (IN.)	2-ROW REHEAT COIL DATA W x H	2-ROW REHEAT COIL DATA FACE #	2-ROW REHEAT COIL DATA GPM	2-ROW REHEAT COIL DATA AIR P.D.	2-ROW REHEAT COIL DATA PIPE SIZE	REMARKS
VAV 6	KRUEGER LM48-6	0-350	450	150	6	12"x10"	Ø.83	1	Ø.11"	½"	
VAV 8	KRUEGER LM48-8	350-750	800	200	8	12"x10"	Ø.83	1	Ø.41"	½"	
VAV 10	KRUEGER LM48-10	750-1200	1350	375	10	14"x12½"	1.22	1	Ø.48"	½"	
VAV 12	KRUEGER LM48-12	1200-1700	2100	600	12	16"x15"	1.67	2	Ø.51"	½"	
VAV 14	KRUEGER LM48-14	1700-2500	2900	850	14	20"x17½"	2.43	2	Ø.52"	½"	
VAV 16	KRUEGER LM48-16	2500-3600	3700	1250	16	24"x18"	3.0	3	Ø.52"	½"	
VAV 22	KRUEGER LM48-22	3600-6000	7000	1400	22	28"x17⅞"	3.48	3	Ø.52"	½"	

FAN SCHEDULE

NO.	MANUFACTURER & MODEL NO.	TYPE	CFM	S.P.	RPM	HP	VOLTAGE V / Ph / Hz	DRIVE TYPE	REMARKS	INTERLOCK TO AC UNIT	SERVICE	OPER. WT. (LBS.)
EF 1	LOREN COOK 150 ACRUB	CENTRIG. ROOF MOUNTED	1300	5/8"	1017	1/3	120/1/60	BELT	WITH ROOF CURB AND BACKDRAFT DAMPER	AC-1 & 2	PUBLISH RESTROOMS 1102 - 1104	125
EF 2	LOREN COOK 165 ACRUB	CENTRIG. ROOF MOUNTED	1240	3/4"	1016	1/2	120/1/60	BELT	WITH ROOF CURB AND BACKDRAFT DAMPER	AC-1	ELEC. / MACH. ROOM & TOILETS 2123 - 2132	135
EF 3	LOREN COOK 150 ACRUB	CENTRIG. ROOF MOUNTED	1500	5/8"	1059	1/2	120/1/60	BELT	WITH ROOF CURB	AC-3	STAFF'S TOILETS 1605 - 1606	130
EF 4	LOREN COOK 210 ACRUB	CENTRIG. ROOF MOUNTED	3500	3/4"	993	2	460/3/60	BELT	WITH ROOF CURB AND BACKDRAFT DAMPER	AC-4	FITNESS, WOMEN'S LOCKERS	260
EF 5	LOREN COOK 300 ACRUB	CENTRIG. ROOF MOUNTED	6600	3/4"	897	3	460/3/60	BELT	WITH ROOF CURB AND BACKDRAFT DAMPER	AC-4	MEN'S TOILETS AND LOCKERS	430
EF 6	LOREN COOK 165 ACRUB	CENTRIG. ROOF MOUNTED	1710	3/4"	1057	3/4	460/3/60	BELT	WITH ROOF CURB AND	AC-3	HOLDING AREAS	135
EF 7	LOREN COOK 165 ACRUB	CENTRIG. ROOF MOUNTED	1500	3/4"	1039	3/4	460/3/60	BELT	WITH ROOF CURB AND	-	DRUG EVIDENCE AND STORAGE	135
EF 8	LOREN COOK 165 ACRUB	CENTRIG. ROOF MOUNTED	1700	3/4"	1023	3/4	460/3/60	BELT	WITH ROOF CURB AND BACKDRAFT DAMPER	AC-8	MEZZ. LEVEL'S TOILETS	135
EF 9	LOREN COOK 155 ACRUB	CENTRIG. ROOF MOUNTED	3600	1/2"	908	1	460/3/60	BELT	WITH ROOF CURB AND BACKDRAFT DAMPER	-	SALLY PORT 4401	185
EF 10	LOREN COOK GN-520	INLINE CABINET FAN	200	3/8"	883	79 WATTS	120/1/60	DIRECT	WITH INTEGRAL BACKDRAFT DAMPER & CONTROL BY LINE VOLTAGE ROOM THERMOSTAT	-	I.D.F. ROOM 2502	57
EF 11	LOREN COOK GN-520	INLINE CABINET FAN	200	3/8"	883	79 WATTS	120/1/60	DIRECT	WITH INTEGRAL BACKDRAFT DAMPER & CONTROL BY LINE VOLTAGE ROOM THERMOSTAT	-	I.D.F. ROOM 1615	57
EF 12	LOREN COOK GC-180	CEILING MOUNTED FAN	150	3/8"	1089	103 WATTS	120/1/60	DIRECT	WITH INTEGRAL BACKDRAFT DAMPER AND TIME DELAY OFF RELAY	-	UNISEX TOILET 3401	42
EF 13	LOREN COOK GC-420	CEILING MOUNTED FAN	200	3/8"	1056	122 WATTS	120/1/60	DIRECT	WITH INTEGRAL BACKDRAFT DAMPER AND TIME DELAY OFF RELAY	-	SHOWER & TOILET 2321	56
EF 14	LOREN COOK GC-420	CEILING MOUNTED FAN	200	3/8"	1056	122 WATTS	120/1/60	DIRECT	WITH INTEGRAL BACKDRAFT DAMPER AND TIME DELAY OFF RELAY	-	OFFICE'S TOILET 4204	56
EF 15	LOREN COOK GC-520	CEILING MOUNTED FAN	240	3/8"	998	99 WATTS	120/1/60	DIRECT	WITH INTEGRAL BACKDRAFT DAMPER AND TIME DELAY OFF RELAY	-	MEN'S TOILET 4211	60
EF 16	LOREN COOK GC-520	CEILING MOUNTED FAN	240	3/8"	998	99 WATTS	120/1/60	DIRECT	WITH INTEGRAL BACKDRAFT DAMPER AND TIME DELAY OFF RELAY	-	WOMEN'S TOILET 4212	60
EF 17	LOREN COOK 100 CPA	UTILITY FAN	810	1"	2126	1/2	120/1/60	BELT	WITH BACKDRAFT DAMPER, CLOCKWISE - UPBLAST & SPRING TYPE VIBRATION ISOLATORS	AC-5	FUME HOOD ID WORK ROOM	60
EF 18	LOREN COOK 100 CPA	UTILITY FAN	810	1"	2126	1/2	120/1/60	BELT	WITH BACKDRAFT DAMPER, CLOCKWISE - UPBLAST & SPRING TYPE VIBRATION ISOLATORS	AC-5	FUME HOOD ID WORK ROOM	60
EF 19	LOREN COOK 100 CPA	UTILITY FAN	810	1"	2126	1/2	120/1/60	BELT	WITH BACKDRAFT DAMPER, CLOCKWISE - UPBLAST & SPRING TYPE VIBRATION ISOLATORS	AC-5	FUME HOOD ID WORK ROOM	60
EF 20	LOREN COOK 150 ACRUB	CENTRIG. ROOF MOUNTED	1500	5/8"	1059	1/2	120/1/60	BELT	WITH ROOF CURB AND CONTROL BY LINE VOLTAGE ROOM THERMOSTAT	-	ELEC. / SWITCH GEAR ROOMS 3304 & 3305	130

LEGEND

SYMBOL	DESCRIPTION
	SUPPLY AIR GRILLE OR REGISTER
	RETURN AIR GRILLE OR REGISTER
	EXHAUST AIR GRILLE OR REGISTER
	SUPPLY AIR DUCT
	RETURN AIR DUCT
	EXHAUST AIR DUCT
M.D.	MOTORIZED DAMPER
S.F.D.	COMBINATION SMOKE / FIRE DAMPER
F.D. D.F.D.	FIRE DAMPER OR DYNAMIC FIRE DAMPER
V.D.	MANUAL VOLUME DAMPER
B.D.D.	BACKDRAFT DAMPER
T	THERMOSTAT
S	SWITCH
P.O.C.	POINT OF CONNECTION
SD	SMOKE DETECTOR
	DUCT WITH LINING
	FLEXIBLE DUCT
	EXIST. HVAC EQUIP. TO REMAIN
T T	EXIST. ROOM TSTAT TO BE RELOCATED
	EXIST. SUPPLY AIR GRILLE TO REMAIN
	EXIST. RETURN AIR GRILLE TO REMAIN
	EXIST. EXHAUST AIR GRILLE TO REMAIN

ABBREVIATIONS

ABBREV.	DESCRIPTION
A.P.	ACCESS PANEL
E.C.	ELECTRICAL CONTRACTOR
G.C.	GENERAL CONTRACTOR
P.C.	PLUMBING CONTRACTOR
U.C.	DOOR UNDER CUT
D.L.	DOOR LOUVER
U.T.R.	UP THRU ROOF
D.T.R.	DOWN THRU ROOF
S.A.G.	SUPPLY AIR GRILLE
S.A.R.	SUPPLY AIR REGISTER
R.A.G.	RETURN AIR GRILLE
R.A.R.	RETURN AIR REGISTER
E.A.G.	EXHAUST AIR GRILLE
E.A.R.	EXHAUST AIR REGISTER
M.A.G.	MAKE-UP AIR GRILLE
O.A.G.	OUTSIDE AIR GRILLE
T.A.G.	TRANSFER AIR GRILLE
(E)	EXISTING H.V.A.C. EQUIP. TO REMAIN
(N)	NEW H.V.A.C. EQUIPMENT
(R)	EXISTING H.V.A.C. EQUIP. TO BE RELOCATED
(REB)	REBALANCE EXISTING
(REM)	EXISTING H.V.A.C. EQUIP. TO BE REMOVED

SUPPLY DIFFUSER SCHEDULE

I.D.	SUPPLY DIFFUSER	MANUFACTURER & MODEL	FACE SIZE	FRAME TYPE	DUCT CONN	RANGE (CFM)	REMARKS
SD 6"	6" ROUND NECK	KRUEGER 6500	24" x24"	23	6"ø	0-100	TEE-BAR CEILING PERFORATED FACE
SD 8"	8" ROUND NECK	KRUEGER 6500	24" x24"	23	8"ø	101-250	TEE-BAR CEILING PERFORATED FACE
SD 10"	10" ROUND NECK	KRUEGER 6500	24" x24"	23	10"ø	251-380	TEE-BAR CEILING PERFORATED FACE
SD 12"	12" ROUND NECK	KRUEGER 6500	24" x24"	23	12"ø	381-500	TEE-BAR CEILING PERFORATED FACE
SD 14"	14" ROUND NECK	KRUEGER 6500	24" x24"	23	14"ø	501-650	TEE-BAR CEILING PERFORATED FACE
SD 16"	16" ROUND NECK	KRUEGER 6500	24" x24"	23	16"ø	651-840	TEE-BAR CEILING PERFORATED FACE
SD 16"	16"x18" W/ SQ. TO RND.	KRUEGER 6200/1200	24" x24"	23	16"ø	841-1125	TEE-BAR CEILING PERFORATED FACE
SD 6"H	6"x6"	KRUEGER 1200	10.5" x10.5"	21	6"ø	0-100	HARD CEILING MODULAR
SD 8"H	8"x8"	KRUEGER 1200	12.5" x12.5"	21	8"ø	101-240	HARD CEILING MODULAR
SD 10"H	10"x10"	KRUEGER 1200	14.5" x14.5"	21	10"ø	241-400	HARD CEILING MODULAR
SD 12"H	12"x12"	KRUEGER 1200	16.5" x16.5"	21	12"ø	401-600	HARD CEILING MODULAR
SD 14"H	14"x14"	KRUEGER 1200	18.5" x18.5"	21	14"ø	601-850	HARD CEILING MODULAR
SD 16"H	16"x16"	KRUEGER 1200	20.5" x20.5"	21	16"ø	851-1250	HARD CEILING MODULAR
SD 18"H	18"x18"	KRUEGER 1200	22.5" x22.5"	21	18"ø	1251-1575	HARD CEILING MODULAR
SD 20"H	20"x20"	KRUEGER 1200	24.5" x24.5"	21	18"ø	1576-1950	HARD CEILING MODULAR
SD 24"H	24"x24"	KRUEGER 1200	28.5" x28.5"	21	20"ø	1951-2500	HARD CEILING MODULAR

XIX — NO. OF SLOT
CFM — TOTAL CFM
X'-X" — TOTAL LENGTH

ALL LINEAR DIFFUSERS SHALL BE KRUEGER, REFER TO FLOOR PLANS FOR SIZES, UNLESS OTHERWISE NOTED

PIPING MATERIAL

1. HOT WATER HEATING PIPING SHALL BE COPPER TUBING TYPE "L" WITH WROT COPPER FITTINGS. SOLDER WITH "95/5" SOLDER.
2. REFRIGERANT PIPING SHALL BE COPPER "ACR" TUBING PURGED AND CHARGE WITH NITROGEN AND SEALED, BRAZED WITH "SILFOS".

PIPING SUPPORT

HANGER SPACING & ROD SIZE FOR COPPER PIPE

PIPE SIZE	WEIGHT / Ft.	HANGER SPACING	ROD SIZE
1/2"	0.38 LBS	6 Ft.	3/8"
3/4"	0.66 LBS	6 Ft.	3/8"
1"	1.01 LBS	6 Ft.	3/8"
1-1/4"	1.43 LBS	6 Ft.	3/8"
1-1/2"	1.90 LBS	6 Ft.	3/8"
2"	3.09 LBS	8 Ft.	3/8"
2-1/2"	4.54 LBS	8 Ft.	1/2"
3"	6.28 LBS	8 Ft.	1/2"
4"	10.56 LBS	8 Ft.	5/8"

TITLE - 24 ENERGY EFFICIENCY STANDARDS FOR NON-RESIDENTIAL BUILDINGS

MANDATORY REQUIREMENTS

NOTE: SECTION NUMBERS REFER TO TITLE-24 REGULATIONS UNLESS NOTED OTHERWISE.

MANUFACTURER'S REQUIREMENTS SET FORTH IN SECTIONS 111 & 112 FOR APPLIANCES AND HVAC EQUIPMENT EFFICIENCY AND PACKAGE CONTROLS SHALL APPLY.

[X] A. THE MANUFACTURER HAS CERTIFIED THAT THE EQUIPMENT COMPLIES WITH THE APPLICABLE MANUFACTURER PROVISIONS OF SECTION 111 THROUGH 119.

[X] SECTION 115: NATURAL GAS EQUIPMENT OR APPLIANCES SHALL NOT BE EQUIPPED WITH A CONTINUOUSLY BURNING PILOT LIGHT, INCLUDING FURNACES AND SPACE HEATERS BUT NOT LIMITED THERETO.

[X] CONTROL EQUIPMENT CERTIFICATION:

A. AUTOMATIC TIMER SWITCHES SHALL BE INSTALLED PER SECTION 119(c).
B. OCCUPANCY SENSORS SHALL BE INSTALLED PER SECTION 119(d).
C. DEMAND VENTILATION CONTROLS SHALL BE INSTALLED PER SECTION 121(c) 3. IF APPLICABLE TO TAKE EXCEPTION TO MINIMUM OUTDOOR VENTILATION REQUIREMENTS.

[X] SECTION 121: VENTILATION REQUIREMENTS:

A. VENTILATION RATES OF OUTDOOR AIR SHALL MEET THE REQUIREMENTS OF SECTION 121.
B. DESIGN REQUIREMENTS OF SECTION 121(b) SHALL BE IN-CORPORATED.
C. OPERATING AND CONTROL REQUIREMENTS OF SECTION 121(c) SHALL BE ADHERED TO.
D. OUTDOOR AIR SHALL BE PROVIDED AS SPECIFIED IN SECTION 121(d).
E. AIR BALANCE AND CERTIFY DESIGN OUTDOOR AIR QUANTITIES AS SPECIFIED IN SECTION 121(e).

[X] SECTION 122: CONTROLS FOR SPACE CONDITIONING SYSTEMS:

A. EACH ZONE AS SET FORTH IN SECTION 122(a) SHALL HAVE AN INDIVIDUAL HEATING AND COOLING THERMOSTAT.
B. THERMOSTATS SECTION 122(b).
WHEN USED FOR HEATING SHALL BE CAPABLE OF ADJUSTMENT DOWN TO 55° F OR LOWER.
WHEN USED FOR COOLING SHALL BE CAPABLE OF ADJUSTMENT UP TO 85° F OR HIGHER.
WHEN USED FOR BOTH HEATING AND COOLING SHALL BE CAPABLE OF A DEAD BAND TEMPERATURE RANGE OF 5° F BETWEEN HEATING AND COOLING.
C. HOTEL/MOTEL GUEST ROOM AND HIGH-RISE BUILDING UNIT THERMOSTATS SHALL COMPLY WITH SECTION122 (d).
D. HEAT PUMP CONTROLS SHALL COMPLY WITH SECTION 122 (d).
E. SET BACK OR SET UP CONTROLS SHALL BE AS DESCRIBED IN SECTION 123(e).
F. CONTROLS SHALL AUTOMATICALLY SHUT OFF SYSTEM DURING PERIODS OF NON-USE PER SECTION 122(f).
G. DAMPERS FOR SUPPLY AND EXHAUST AIR SHALL BE INSTALLED TO CLOSE DURING PERIODS OF NON-USE PER SECTION 122 (f).
H. ISOLATION AREA DESCRIBED SHALL COMPLY WITH SECTION 122 (g).

[X] SECTION 123: PIPE INSULATION:

PIPE INSULATION SHALL BE INSTALLED PER SECTION 123 REFER TO TABLE 1-G PIPE STANDARDS FOR INSULATION THICKNESS OF PIPERS USING FIBERGLASS OR FOAM INSULATION, USE EQUATION 1-A FOR INSULATION THICKNESS OF OTHER INSULATING MATERIALS.

INSULATION MAY BE OMITTED FOR THE FOLLOWING EXCEPTIONS:

A. FACTORY INSTALLED PIPING WITHIN CERTIFIED EQUIPMENT.
B. PIPING CONVEYING FLUIDS WITH AN OPERATING RANGE TEMPERATURE RANGE OF BETWEEN 60° F TO 105° F.
C. PIPING SERVING PROCESS LOADS, GAS PIPING, COLD DOMESTIC WATER PIPING, ROOF DRAIN VENTS OR WASTE PIPING.
D. PIPING WHERE THE HEAT GAIN OR LOSS WILL NOT INCREASE THE BUILDING SOURCE ENERGY USE.

[X] SECTION 124: DUCT CONSTRUCTION AND INSULATION:

DUCTS SHALL BE CONSTRUCTED, INSTALLED AND INSULATED PER CHAPTER 6 OF THE 2001 CALIFORNIA MECHANICAL CODE (C.M.C.) AND TITLE 24 STANDARDS.

A. DUCT MATERIALS AND JOINTING SHALL BE IN ACCORDANCE WITH CHAPTER 6 OF THE 2001 CALIFORNIA MECHANICAL CODE (C.M.C.)
B. DUCT AND PLENUM MATERIALS AND INSTALLATION SHALL COMPLY WITH SECTION 124(b)
C. DUCT INSULATION MATERIALS AND INSTALLATION SHALL COMPLY WITH SECTION 124(c)

GENERAL NOTES

1. ALL CUTTING, PATCHING AND PAINTING BY GENERAL CONTRACTOR.
2. ALL ROOF, FLOOR AND WALL OPENINGS BY GENERAL CONTRACTOR.
3. CONDENSATE DRAIN LINES SHALL BE SLOPE AT 1/4" PER FOOT TO AN APPROVED RECEPTOR, ALL BY PLUMBING CONTRACTOR.
4. ROOF MOUNTED EQUIPMENT SHALL BE LABELED AS TO THE SPACE IT SERVES.
5. ALL APPLIANCES DESIGNED TO BE INSTALLED IN A PERMANENT POSITION SHALL BE SECURELY FASTENED IN PLACE.

RECORD DRAWING
02/04/2004

THIS DESIGN IS THE EXCLUSIVE PROPERTY OF WESTERN ALLIED CORPORATION. THE DRAWINGS AND BUILDING CONTAINING THIS DESIGN ARE AND SHALL REMAIN THE PROPERTY OF WESTERN ALLIED CORPORATION. THE DELIVERY OF THE ORIGINAL PRINTS OR COPIES THEREOF DOES NOT CONSTITUTE A PUBLICATION THEREOF.

THESE DRAWINGS OR BLUEPRINTS ARE EXHIBITED TO YOU SOLELY FOR THE PURPOSE OF TRANSACTING A SALE BY WESTERN ALLIED CORPORATION OF THE MECHANICAL SYSTEM INCORPORATED IN THE DESIGN.

ANY COMMUNICATION OF THIS DESIGN WITHOUT THE CONSENT OF WESTERN ALLIED CORPORATION CONSTITUTES A VIOLATION OF THE LAWS OF THIS STATE.

WESTERN ALLIED CORPORATION
STATE CONTRACTOR LICENSE NO. 198521
MECHANICAL CONTRACTORS
SANTA FE SPRINGS
(562) 944-6341 / FAX (562) 944-7092
MENLO PARK
(650) 326-0750 / FAX (650) 321-4946

JOB TITLE: ONTARIO POLICE DEPARTMENT
HEADQUARTERS
2534 SOUTH ARCHIBALD
ONTARIO, CALIFORNIA

SHEET TITLE: HVAC - LEGEND, NOTES & SCHEDULES

NO.	REVISIONS	DRAWN	CHECKED	DATE ISSUED
	PLAN CHECK CORRECTIONS	TDN	MT	06/17/2003
	PLAN CHECK SUBMITTAL	TDN	MT	05/16/2003

DATE:	04/16/2003
DRAWN BY:	T.D.N.
CHECKED BY:	M.T.
SCALE:	
JOB NO. :	11755

M-0.1
SHEET NO.

FAN SCHEDULE

NO.	MANUFACTURER & MODEL NO.	TYPE	CFM	S.P.	RPM	HP	VOLTAGE V / Ph / Hz	DRIVE TYPE	REMARKS	INTERLOCK TO AC UNIT	SERVICE	OPER. WT. (LBS.)
EF 6	LOREN COOK 165 ACRUB	CENTRIG. ROOF MOUNTED	2000	3/4"	1057	3/4	460/3/60	BELT	WITH ROOF CURB	EXIST. AC-5	HOLDING AREAS	135

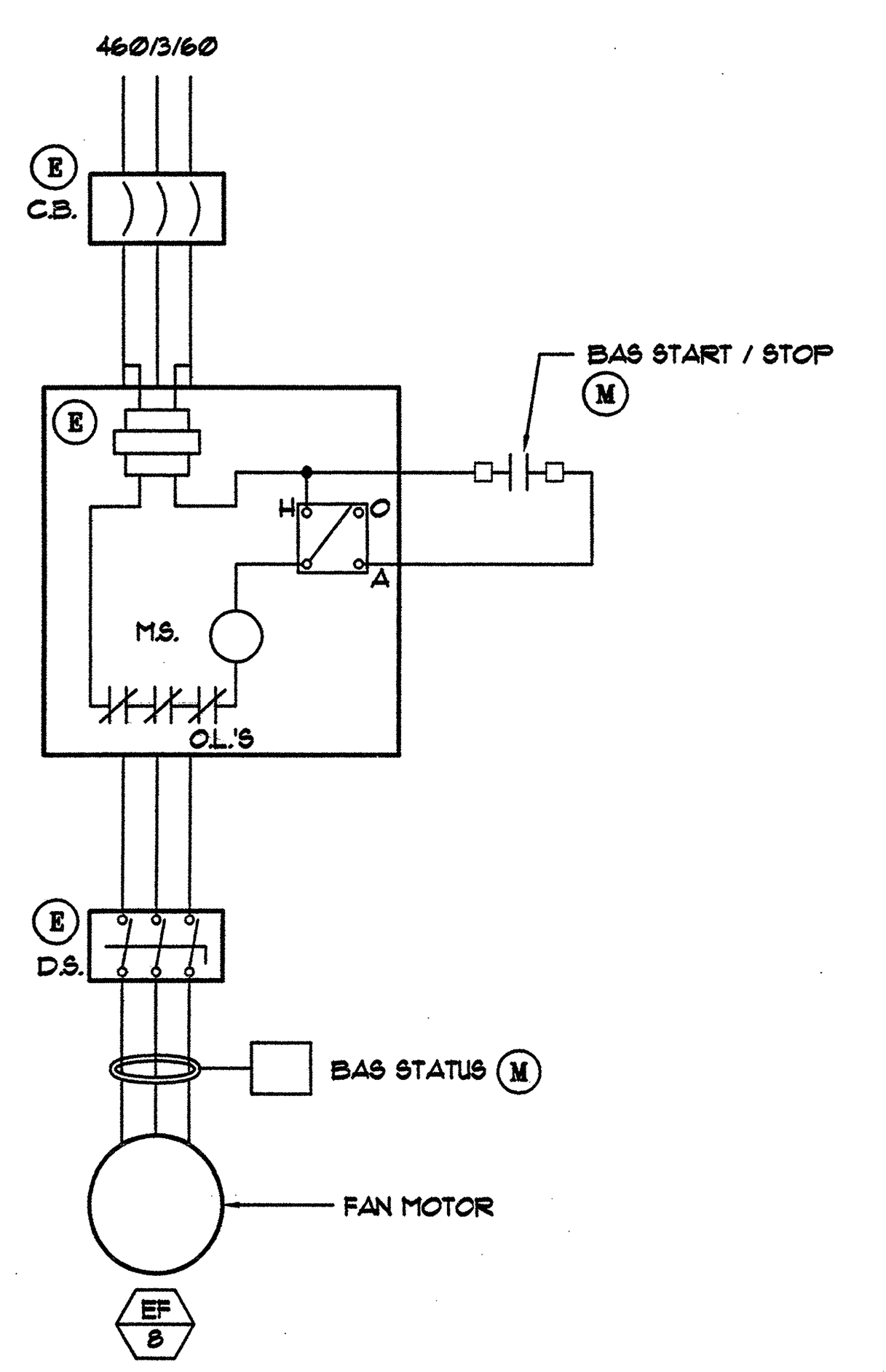

EXHAUST FANS

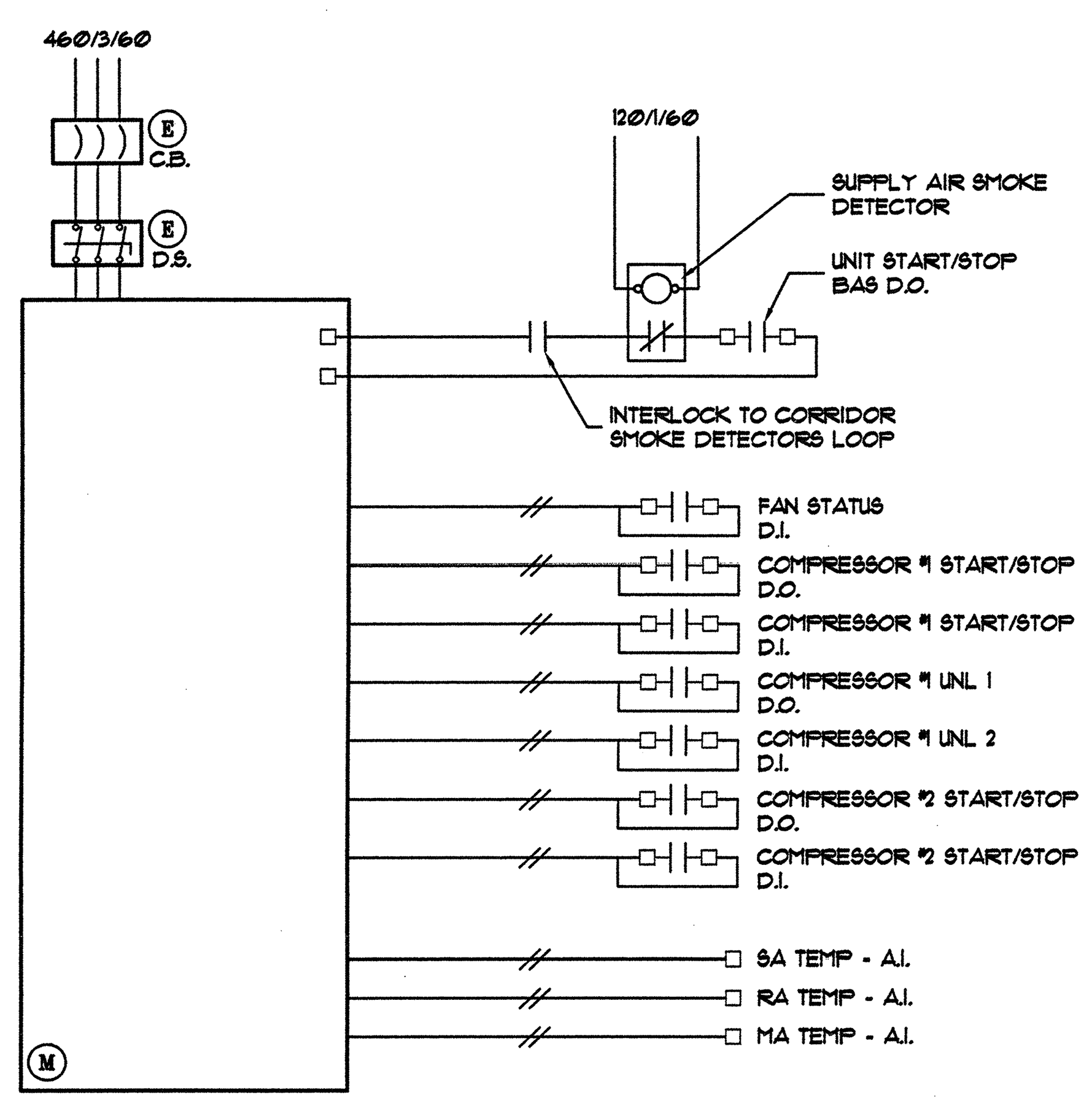

EXISTING AC-5 CONTROL

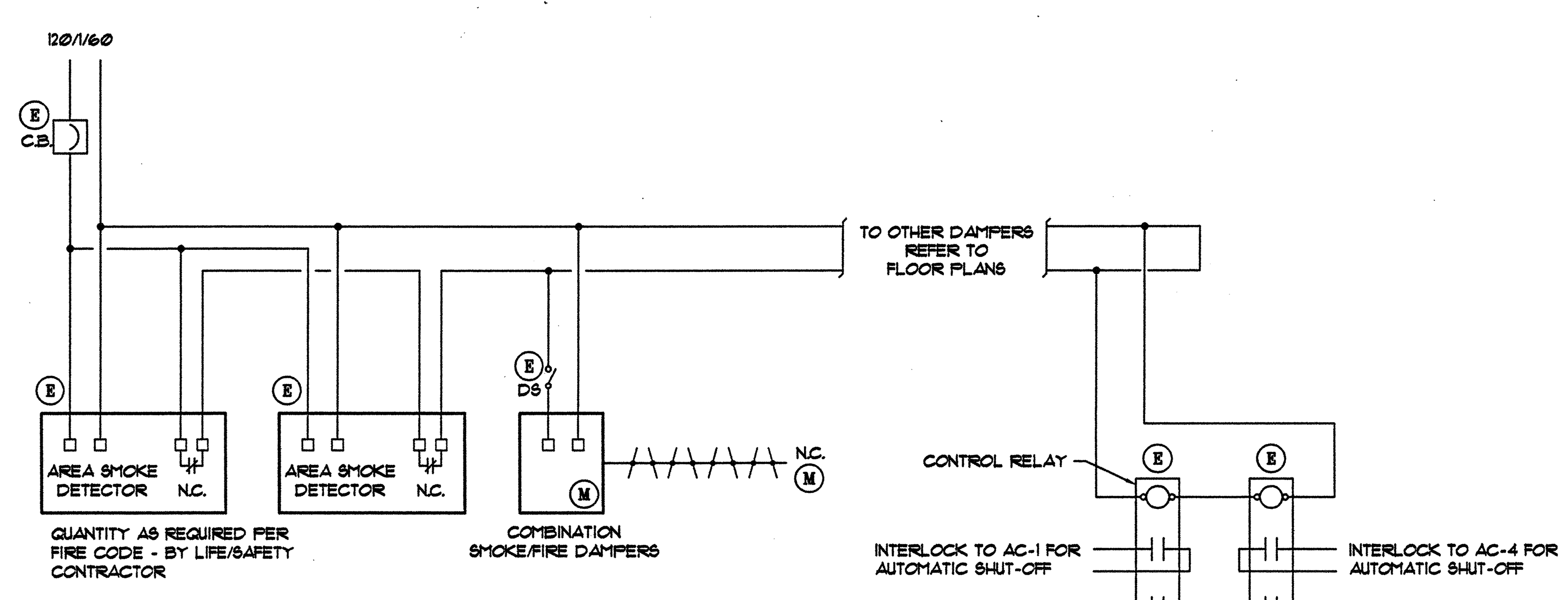

SMOKE DETECTOR NOTE:

LIFE / SAFETY CONTRACTOR SHALL PROVIDE SMOKE DETECTORS IN RATED EXIT AREAS OR DUCTS TO INTERLOCK WITH COMBINATION SMOKE/FIRE DAMPERS AS REQUIRED BY CODE AND THEIR RESPECTIVE LISTINGS. LIFE / SAFETY CONTRACTOR SHALL PROVIDE ALL REQUIRED SMOKE DETECTORS, BOTH DUCT TYPE AND AREA TYPE, AS WELL AS ALL CONDUIT AND WIRING.

CORRIDOR COMBINATION SMOKE/FIRE DAMPER CONTROL

PROJECT DATA NOTES

BUILDING CONSTRUCTION: TYPE V-N FULLY SPRINKLERS

NUMBER OF STORY: 1 - STORY

OCCUPANCY GROUP: I-3

CONSTRUCTION NOTES

1. THE FOLLOWING ARE THE ENFORCEABLE CODES FOR WORK UNDER CONSTRUCTION. UNDER AUTHORITY OF SEISMIC SAFETY ACT AND SHALL APPEAR ON THE TITLE DRAWING OF CONSTRUCTION DOCUMENTS SUBMITTED FOR REVIEW:

   2001 CALIFORNIA MECHANICAL CODE - PART 4 TITLE 24, CCR)

2. DUE TO THE DIFFICULTY OF ANTICIPATION EVERY UNSATISFACTORY CONDITION THAT MIGHT EXIST IN CONNECTION WITH THE EXISTING WORK WHERE ALTERATION OR RECONSTRUCTION WORK IS PROPOSED, THE FOLLOWING CLAUSE OR ONE OF SIMILAR MEANING SHALL BE INCLUDED ON THE PLANS OR IN THE SPECIFICATIONS:

   "THE INTENT OF THE DRAWINGS AND SPECIFICATIONS IS TO RECONSTRUCT THE AIR CONDITIONING SYSTEM IN ACCORDANCE WITH THE 2001 CALIFORNIA BUILDING CODE. SHOULD ANY CONDITION DEVELOP NOT COVERED BY THE CONTRACT DOCUMENTS WHEREIN THE FINISHED WORK WILL NOT COMPLY WITH SAID CODE, A CHANGE ORDER DETAILING AND SPECIFYING THE REQUIRED WORK SHALL BE SUBMITTED TO AND APPROVED BY OSHPD BEFORE PROCEEDING WITH THE WORK."

   THE ABOVE IS REQUIRED BY CCR TITLE 24, PART 1, SECTION 7-125(b) (2)

3. FIRE ALARM SHOP DRAWING SHALL BE REVIEWED AND APPROVED BY OSHPD PRIOR TO ANY INSTALLATION.

ADDITIONAL NOTES

1. ALL PIPE AND DUCTS SHALL BE SUPPORTED AND BRACED PER O.S.H.P.D. ANCHORAGE PRE-APPROVAL No. R-0010, THE SMACNA GUIDELINES FOR SEISMIC RESTRAINTS OF MECHANICAL SYSTEMS AND PLUMBING PIPING SYSTEMS. IT IS THE RESPONSIBILITY OF THE STRUCTURAL ENGINEER TO CHECK THE ADEQUACY OF THE SUPPORTING STRUCTURE TO ENSURE THAT THE ORIGINAL DESIGN REQUIREMENTS ARE MET.
2. ALL THERMOSTATS SHALL BE MOUNTED 4'-0" ABOVE FINISH FLOOR.
3. ALL DUCT INSULATION FLEXIBLE DUCT AND PIPE INSULATION SHALL HAVE A FLAME SPREAD INDEX OF NOT MORE THAN 25 AND A SMOKE DEVELOPMENT OF NOT MORE THAN 50. FLEXIBLE DUCT SHALL NOT EXCEED 7'-0" LENGTH.
4. ALL DUCT LINING, INSULATION AND WRAPPING SHALL HAVE A MOLD, HUMIDITY AND EROSION RESISTANT FACE THAT MEETS THE REQUIREMENTS OF C.M.C. STANDARDS No. 10-1.
5. ASBESTOS OR HAZARDOUS WASTE: IT IS UNDERSTOOD AND AGREED THAT THIS CONTRACT DOES NOT INCLUDE THE HANDLING OF ASBESTOS OR ANY HAZARDOUS WASTE MATERIAL. IF ASBESTOS OR ANY HAZARDOUS WASTE MATERIAL IS ENCOUNTERED, THE OWNER/ARCHITECT SHALL BE NOTIFIED IMMEDIATELY.
6. ALL NEW PENETRATIONS AT RATED ASSEMBLIES SHALL BE FIRE STOPPED PER CBC TABLE 6-A
7. DUCT CONSTRUCTION REQUIREMENTS SHALL MEET THE CURRENT CALIFORNIA MECHANICAL CODE 2001.
8. AIR BALANCE NOTES:
   - A. AIR BALANCING WORK SHALL BE PERFORMED BY A FIRM CERTIFIED BY THE NATIONAL ENVIRONMENTAL BALANCING BUREAU (N.E.B.B.).
   - B. ALL TESTING, ADJUSTING AND BALANCING FINAL READINGS SHALL BE WITHIN ± 10% RANGE OF DESIGN VALUES.
   - C. AIRFLOW READINGS SHALL BE TAKEN BY EITHER READING INLETS AND OUTLETS OR BY DUCT TRAVERSE, DUCT TRAVERSE METHODS SHALL BE IN ACCORDANCE WITH THE N.E.B.B. PROCEDURES MANUAL FOR BOTH ROUND AND RECTANGULAR DUCT.

CONTROL WIRING LEGEND & NOTES

S	INDICATES #18 TWISTED SHIELDED 2-CONDUCTOR CABLE IN CONDUIT AS REQUIRED BY ELECTRICAL CONTRACTOR, U.N.O.
— - —	INDICATES LOW VOLTAGE 24V. CONTROL WIRING AND CONDUIT BY ELECTRICAL CONTRACTOR, U.N.O.
———	INDICATES LINE VOLTAGE 120V. WIRING AND CONDUIT BY ELECTRICAL CONTRACTOR, U.N.O.
(E)	INDICATES ITEMS FURNISHED AND INSTALLED BY ELECTRICAL CONTRACTOR , INCLUDING: CIRCUIT BREAKERS, MAGNETIC STARTERS, DISCONNECT SWITCHES, HAND-OFF-AUTO SWITCHES, RELAYS, AND REMOTE SWITCHES, BUT NOT LIMITED THERETO.
(M)	INDICATES ITEMS FURNISHED AND INSTALLED BY MECHANICAL CONTRACTOR, BUT WIRED BY THE ELECTRICAL CONTRACTOR.
(ME)	INDICATES ITEMS FURNISHED BY MECHANICAL CONTRACTOR AND INSTALLED BY THE ELECTRICAL CONTRACTOR.
(EM)	INDICATES ITEMS FURNISHED BY ELECTRICAL CONTRACTOR AND INSTALLED BY MECHANICAL CONTRACTOR.
(L/S)	INDICATES ITEMS FURNISHED AND INSTALLED BY LIFE/SAFETY CONTRACTOR.
O.L.'S	OVERLOADS
C.B.	CIRCUIT BREAKER
M.S.	MAGNETIC STARTER
D.S.	DISCONNECT SWITCH
H.O.A.	HAND-OFF-AUTO SWITCH
D.I	DIGITAL INPUT
D.O.	DIGITAL OUTPUT
A.I.	ANALOG INPUT
A.O.	ANALOG OUTPUT

LEGEND

SYMBOL	DESCRIPTION
	SUPPLY AIR GRILLE OR REGISTER
	RETURN AIR GRILLE OR REGISTER
	EXHAUST AIR GRILLE OR REGISTER
	SUPPLY AIR DUCT
	RETURN AIR DUCT
	EXHAUST AIR DUCT
M.D.	MOTORIZED DAMPER
S.F.D.	COMBINATION SMOKE / FIRE DAMPER
F.D. D.F.D.	FIRE DAMPER OR DYNAMIC FIRE DAMPER
V.D.	MANUAL VOLUME DAMPER
B.D.D.	BACKDRAFT DAMPER
(T)	THERMOSTAT
(S)	SWITCH
P.O.C.	POINT OF CONNECTION
(SD)	SMOKE DETECTOR
	DUCT WITH LINING
	FLEXIBLE DUCT
	EXIST. HVAC EQUIP. TO REMAIN
(T) (T)	EXIST. ROOM T'STAT TO BE RELOCATED
	EXIST. SUPPLY AIR GRILLE TO REMAIN
	EXIST. RETURN AIR GRILLE TO REMAIN
	EXIST. EXHAUST AIR GRILLE TO REMAIN

ABBREVIATIONS

ABBREV.	DESCRIPTION
A.P.	ACCESS PANEL
E.C.	ELECTRICAL CONTRACTOR
G.C.	GENERAL CONTRACTOR
P.C.	PLUMBING CONTRACTOR
U.C.	DOOR UNDER CUT
D.L.	DOOR LOUVER
U.T.R.	UP THRU ROOF
D.T.R.	DOWN THRU ROOF
S.A.G.	SUPPLY AIR GRILLE
S.A.R.	SUPPLY AIR REGISTER
R.A.G.	RETURN AIR GRILLE
R.A.R.	RETURN AIR REGISTER
E.A.G.	EXHAUST AIR GRILLE
E.A.R.	EXHAUST AIR REGISTER
M.A.G.	MAKE-UP AIR GRILLE
O.A.G.	OUTSIDE AIR GRILLE
T.A.G.	TRANSFER AIR GRILLE
(E)	EXISTING H.V.A.C. EQUIP. TO REMAIN
(N)	NEW H.V.A.C. EQUIPMENT
(R)	EXISTING H.V.A.C. EQUIP. TO BE RELOCATED
(REB)	REBALANCE EXISTING
(REM)	EXISTING H.V.A.C. EQUIP. TO BE REMOVED

CERTIFICATE OF COMPLIANCE [Part 1 of 2] MECH-1

PROJECT NAME: ONTARIO POLICE DEPARTMENT (HOLDING AREA) — DATE: 07/23/2003

PROJECT ADDRESS: 2534 SOUTH ARCHIBALD AVENUE

PRINCIPAL DESIGNER-MECHANICAL: WESTERN ALLIED CORP.(M.TAYLOR) — TELEPHONE: (562) 944-6341 — BUILDING PERMIT #

DOCUMENTATION AUTHOR: WESTERN ALLIED CORP.(M.TAYLOR) — TELEPHONE: (562) 944-6341 — CHECKED BY/DATE Enforcement Agency Use

GENERAL INFORMATION

DATE OF PLANS 07/23/2003 — BUILDING CONDITIONED FLOOR AREA 3996 S.F. — CLIMATE ZONE 10

BUILDING TYPE: [X] NONRESIDENTIAL [ ] HIGH RISE RESIDENTIAL [ ] HOTEL/MOTEL GUEST ROOM

PHASE OF CONSTRUCTION: [ ] NEW CONSTRUCTION [ ] ADDITION [X] ALTERATION [ ] UNCONDITIONED (File Affadavit)

METHOD OF MECHANICAL COMPLIANCE: [X] PRESCRIPTIVE [ ] PERFORMANCE

PROOF OF ENVELOPE COMPLIANCE: [X] PREVIOUS ENVELOPE PERMIT [ ] ENVELOPE COMPLIANCE ATTACHED

STATEMENT OF COMPLIANCE

This Certificate of Compliance lists the building features and performance specifications needed to comply with Title 24, Parts 1 and 6 of the California Code of Regulations. This certificate applies only to building mechanical requirements.

The documentation preparer hereby certifies that the documentation is accurate and complete.

DOCUMENTATION AUTHOR: M.S. TAYLOR — SIGNATURE — DATE: 07/23/2003

The Principal Mechanical Designer hereby certifies that the proposed building design represented in this set of construction documents is consistent with the other compliance forms and worksheets, with the specifications, and with any other calculations submitted with this permit application. The proposed building has been designed to meet the mechanical requirements contained in the applicable parts of Sections 110 through 115, 120 through 124, 140 through 142, 144 and 145.

Please check one:

[ ] I hereby affirm that I am eligible under the provisions of Division 3 of the Business and Professions to sign this document as the person responsible for its perparation; and that I am licensed in the State of California as a civil engineer or mechanical engineer, or I am a licensed architect.

[X] I affirm that I am eligible under the exemption to Division 3 of the Business and Professions Code by Section 5537.2 or 6737.3 to sign this document as the person responsible for its preparation; and that I am a licensed contractor performing this work.

[ ] I affirm that I am eligible under the exemption to Division 3 of the Business and Professions Code to sign this document because it pertains to a structure or type of work described pursuant to Business and Professions Code Section 5537, 5538, and 6737.1.

(These Sections of the Business and Profession Code are printed in full in the Nonresidential Manual.)

PRINCIPAL MECHANICAL DESIGNER-NAME: M.S. TAYLOR — SIGNATURE — DATE: 07/23/2003 — LIC. NO. 198821

MECHANICAL MANDATORY MEASURES

Indicate location on plans of Note Block for Mandatory Measures M-0.1

INSTRUCTIONS TO APPLICANT

For detailed instructions on the use of this and all Energy Efficiency Standards compliance forms, please refer to the Nonresidential Manual published by the California Energy Commission.
MECH-1: Required on plans for all submittals. Part 2 may be incorporated in schedules on plans.
MECH-2: Required for all submittals, but may be incorporated in schedules on plans.
MECH-3: Required for all submittals unless required ventilation rates and airflows are shown on plans, See 4.3.4.
MECH-4: Required for all prescriptive submittals.
MECH-5: Optional. Performance use only for mechanical distribution summary

January 2001

SUPPLY DIFFUSER SCHEDULE

I.D.	SUPPLY DIFFUSER	MANUFACTURER & MODEL	FACE SIZE	FRAME TYPE	DUCT CONN	RANGE (CFM)	REMARKS
6 / CFM	6" ROUND NECK	KRUEGER 6500	24" x24"	23	6"φ	0-100	TEE-BAR CEILING PERFORATED FACE
8 / CFM	8" ROUND NECK	KRUEGER 6500	24" x24"	23	8"φ	101-250	TEE-BAR CEILING PERFORATED FACE
10 / CFM	10" ROUND NECK	KRUEGER 6500	24" x24"	23	10"φ	251-390	TEE-BAR CEILING PERFORATED FACE
12 / CFM	12" ROUND NECK	KRUEGER 6500	24" x24"	23	12"φ	391-500	TEE-BAR CEILING PERFORATED FACE
14 / CFM	14" ROUND NECK	KRUEGER 6500	24" x24"	23	14"φ	501-650	TEE-BAR CEILING PERFORATED FACE
16 / CFM	16" ROUND NECK	KRUEGER 6500	24" x24"	23	16"φ	651-840	TEE-BAR CEILING PERFORATED FACE
18 / CFM	18"x18" W/ SQ. TO RND.	KRUEGER 6200/1100	24" x24"	23	16"φ	841-1125	TEE-BAR CEILING PERFORATED FACE
6H / CFM	6"x6"	KRUEGER 1200	10.5" x10.5"	21	6"φ	0-100	HARD CEILING MODULAR
8H / CFM	8"x8"	KRUEGER 1200	12.5" x12.5"	21	8"φ	101-240	HARD CEILING MODULAR
10H / CFM	10"x10"	KRUEGER 1200	14.5" x14.5"	21	10"φ	241-400	HARD CEILING MODULAR
12H / CFM	12"x12"	KRUEGER 1200	16.5" x16.5"	21	12"φ	401-700	HARD CEILING MODULAR
14H / CFM	14"x14"	KRUEGER 1200	18.5" x18.5"	21	14"φ	701-950	HARD CEILING MODULAR
16H / CFM	16"x16"	KRUEGER 1200	20.5" x20.5"	21	16"φ	951-1250	HARD CEILING MODULAR
18H / CFM	18"x18"	KRUEGER 1200	22.5" x22.5"	21	18"φ	1251-1575	HARD CEILING MODULAR
20H / CFM	20"x20"	KRUEGER 1200	24.5" x24.5"	21	18"φ	1576-1950	HARD CEILING MODULAR
24H / CFM	24"x24"	KRUEGER 1200	28.5" x28.5"	21	20"φ	1951-2500	HARD CEILING MODULAR

X|X / CFM / X'-X": NO. OF SLOT — SLOT WIDTH — TOTAL CFM — TOTAL LENGTH

ALL LINEAR DIFFUSERS SHALL BE KRUEGER, REFER TO FLOOR PLANS FOR SIZES, UNLESS NOTED OTHERWISE ON PLANS

TITLE - 24 ENERGY EFFICIENCY STANDARDS FOR NON-RESIDENTIAL BUILDINGS

MANDATORY REQUIREMENTS

NOTE: SECTION NUMBERS REFER TO TITLE-24 REGULATIONS UNLESS NOTED OTHERWISE.

MANUFACTURER'S REQUIREMENTS SET FORTH IN SECTIONS 111 & 112 FOR APPLIANCES AND HVAC EQUIPMENT EFFICIENCY AND PACKAGE CONTROLS SHALL APPLY.

[X] A. THE MANUFACTURER HAS CERTIFIED THAT THE EQUIPMENT COMPLIES WITH THE APPLICABLE MANUFACTURER PROVISIONS OF SECTION 111 THROUGH 119.

[ ] SECTION 115: NATURAL GAS EQUIPMENT OR APPLIANCES SHALL NOT BE EQUIPPED WITH A CONTINUOUSLY BURNING PILOT LIGHT, INCLUDING FURNACES AND SPACE HEATERS BUT NOT LIMITED THERETO.

[X] CONTROL EQUIPMENT CERTIFICATION:

- A. AUTOMATIC TIMER SWITCHES SHALL BE INSTALLED PER SECTION 119(c).
- B. OCCUPANCY SENSORS SHALL BE INSTALLED PER SECTION 119(d).
- C. DEMAND VENTILATION CONTROLS SHALL BE INSTALLED PER SECTION 121(c) 3, IF APPLICABLE, TO TAKE EXCEPTION TO MINIMUM OUTDOOR VENTILATION REQUIREMENTS.

[X] SECTION 121: VENTILATION REQUIREMENTS:

- A. VENTILATION RATES OF OUTDOOR AIR SHALL MEET THE REQUIREMENTS OF SECTION 121.
- B. DESIGN REQUIREMENTS OF SECTION 121(b) SHALL BE IN-CORPORATED.
- C. OPERATING AND CONTROL REQUIREMENTS OF SECTION 121(c) SHALL BE ADHERED TO.
- D. OUTDOOR AIR SHALL BE PROVIDED AS SPECIFIED IN SECTION 121(d).
- E. AIR BALANCE AND CERTIFY DESIGN OUTDOOR AIR QUANTITIES AS SPECIFIED IN SECTION 121(e).

[X] SECTION 122: CONTROLS FOR SPACE CONDITIONING SYSTEMS:

- A. EACH ZONE AS SET FORTH IN SECTION 122(a) SHALL HAVE AN INDIVIDUAL HEATING AND COOLING THERMOSTAT.
- B. THERMOSTATS SECTION 122(b): WHEN USED FOR HEATING SHALL BE CAPABLE OF ADJUSTMENT DOWN TO 55° F OR LOWER. WHEN USED FOR COOLING SHALL BE CAPABLE OF ADJUSTMENT UP TO 85° F OR HIGHER. WHEN USED FOR BOTH HEATING AND COOLING SHALL BE CAPABLE OF A DEAD BAND TEMPERATURE RANGE OF 5° F BETWEEN HEATING AND COOLING.
- C. HOTEL/MOTEL GUEST ROOM AND HIGH-RISE BUILDING UNIT THERMOSTATS SHALL COMPLY WITH SECTION122 (d).
- D. HEAT PUMP CONTROLS SHALL COMPLY WITH SECTION 122 (d).
- E. SET BACK OR SET UP CONTROLS SHALL BE AS DESCRIBED IN SECTION 122(e).
- F. CONTROLS SHALL AUTOMATICALLY SHUT OFF SYSTEM DURING PERIODS OF NON-USE PER SECTION 122(f).
- G. DAMPERS FOR SUPPLY AND EXHAUST AIR SHALL BE INSTALLED TO CLOSE DURING PERIODS OF NON-USE PER SECTION 122 (f).
- H. ISOLATION AREA DEVICES SHALL COMPY WITH SECTION 122 (g).

[X] SECTION 123: PIPE INSULATION:

PIPE INSULATION SHALL BE INSTALLED PER SECTION 123 REFER TO TABLE 1-G FOR STANDARDS FOR INSULATION THICKNESS OF PIPES USING FIBERGLASS OR FOAM INSULATION, USE EQUATION 1-A FOR INSULATION THICKNESS OF OTHER INSULATING MATERIALS.

INSULATION MAY BE OMITTED FOR THE FOLLOWING EXCEPTIONS:

- A. FACTORY INSTALLED PIPING WITHIN CERTIFIED EQUIPMENT.
- B. PIPING CONVEYING FLUIDS WITH AN OPERATING RANGE TEMPERATURE RANGE OF BETWEEN 60° F TO 105° F.
- C. PIPING SERVING PROCESS LOADS, GAS PIPING, COLD DOMESTIC WATER PIPING, ROOF DRAIN VENTS OR WASTE PIPING.
- D. PIPING WHERE THE HEAT GAIN OR LOSS WILL NOT INCREASE THE BUILDING SOURCE ENERGY USE.

[X] SECTION 124: DUCT CONSTRUCTION AND INSULATION:

DUCTS SHALL BE CONSTRUCTED, INSTALLED AND INSULATED PER CHAPTER 6 OF THE 2001 CALIFORNIA MECHANICAL CODE (C.M.C.) AND TITLE 24 STANDARDS.

- A. DUCT MATERIALS AND JOINTING SHALL BE IN ACCORDANCE WITH CHAPTER 6 OF THE 2001 CALIFORNIA MECHANICAL CODE (C.M.C.)
- B. DUCT AND PLENUM MATERIALS AND INSTALLATION SHALL COMPLY WITH SECTION 124(b)
- C. DUCT INSULATION MATERIALS AND INSTALLATION SHALL COMPLY WITH SECTION 124(c)

GENERAL NOTES

1. ALL CUTTING, PATCHING AND PAINTING BY GENERAL CONTRACTOR.
2. ALL ROOF, FLOOR AND WALL OPENINGS BY GENERAL CONTRACTOR.
3. ALL APPLIANCES DESIGNED TO BE INSTALLED IN A PERMANENT POSITION SHALL BE SECURELY FASTENED IN PLACE.

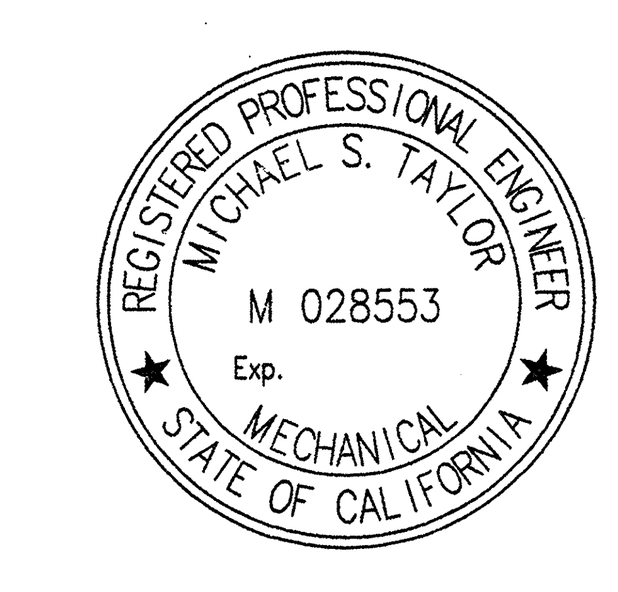

RECORD DRAWING
02/04/2004

THIS DESIGN IS THE EXCLUSIVE PROPERTY OF WESTERN ALLIED CORPORATION. THE DRAWINGS AND BLUEPRINTS CONTAINING THIS DESIGN ARE AND SHALL REMAIN THE PROPERTY OF WESTERN ALLIED CORPORATION. THE DELIVERY OF THE ORIGINAL PRINTS OR COPIES THEREOF DOES NOT CONSTITUTE A PUBLICATION THEREOF.

THESE DRAWINGS OR BLUEPRINTS ARE EXHIBITED TO YOU SOLELY FOR THE PURPOSE OF TRANSACTING A SALE BY WESTERN ALLIED CORPORATION OF THE MECHANICAL SYSTEM INCORPORATED IN THE DESIGN.

ANY COMMUNICATION OF THIS DESIGN WITHOUT THE CONSENT OF WESTERN ALLIED CORPORATION CONSTITUTES A VIOLATION OF THE LAWS OF THIS STATE.

WESTERN ALLIED CORPORATION
STATE CONTRACTOR LICENSE NO. 198821
MECHANICAL CONTRACTORS
SANTA FE SPRINGS
(562) 944-6341 / FAX (562) 944-7092
MENLO PARK
(650) 326-0750 / FAX (650) 321-4946

JOB TITLE: ONTARIO POLICE DEPARTMENT HEADQUARTERS (HOLDING AREA) 2534 SOUTH ARCHIBALD ONTARIO, CALIFORNIA

SHEET TITLE: HVAC - LEGEND, NOTES & SCHEDULES

NO.	REVISIONS	DATE ISSUED	CHECKER	DRAWN
	PLAN CHECK SUBMITTAL	07/23/2003	MT	TDN

DATE:	07/23/2003
DRAWN BY:	T.D.N.
CHECKED BY:	M.T.
SCALE:	N.T.S.
JOB NO. :	11755

M-0.1.A

SHEET NO. 1 OF 3

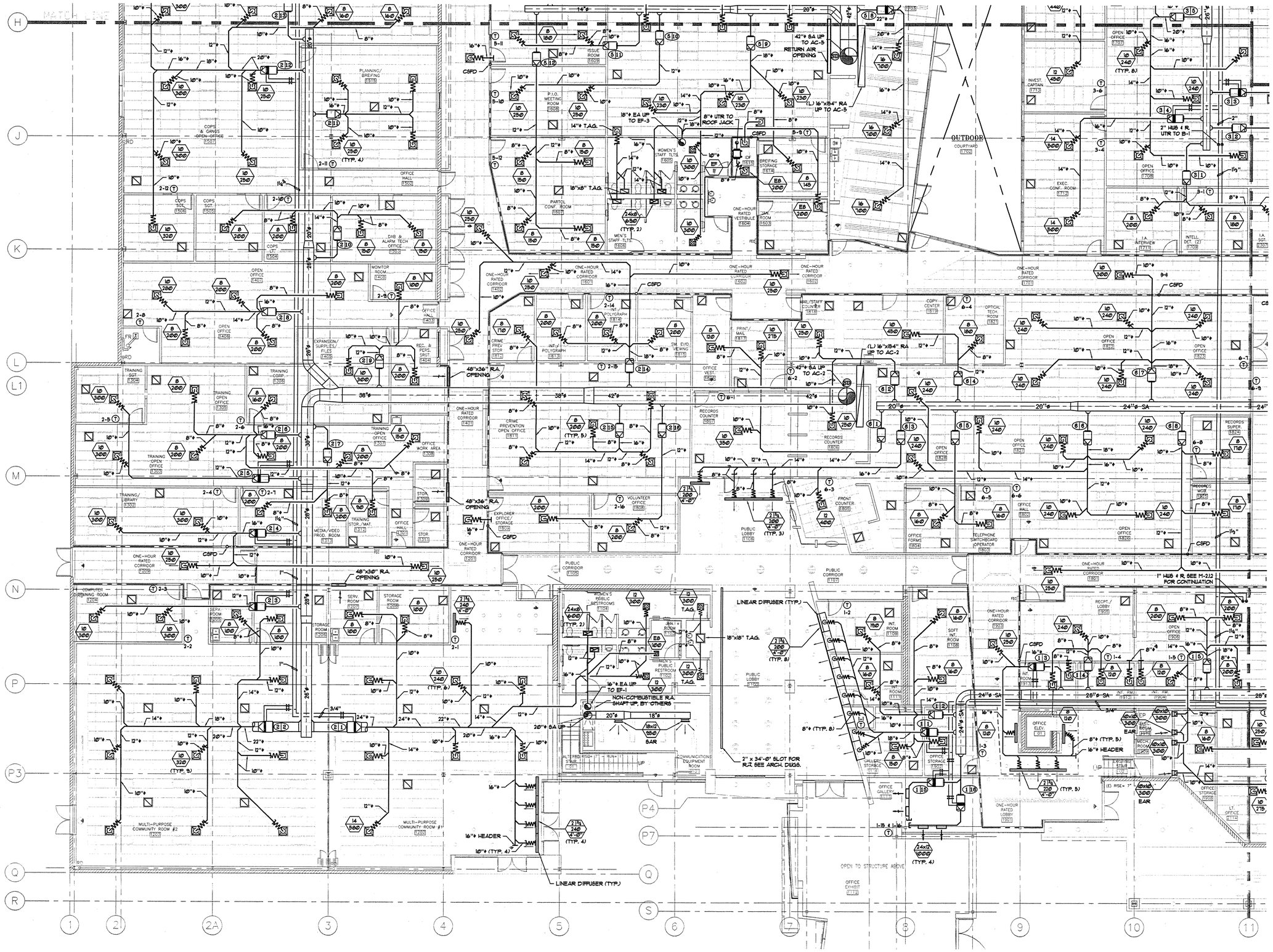

GENERAL NOTES:

1. REFER TO SHEET M-2.2 FOR ZONE SCHEDULES
2. CEILING SPACES USED AS RETURN AIR PLENUMS SHALL COMPLY WITH ALL THE PROVISIONS OF UMC SECTIONS 601. CORRIDORS OR SPACES ABOVE CORRIDORS REQUIRED TO BE OF FIRE RESISTIVE CONSTRUCTION SHALL NOT BE USED AS PART OF A SUPPLY OR RETURN AIR DUCT SYSTEM, IN ACCORDANCE WITH UMC SECTION 601.1.

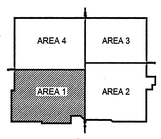

RECORD DRAWING
02/04/2004

THIS DESIGN IS THE EXCLUSIVE PROPERTY OF WESTERN ALLIED CORPORATION. THE DRAWINGS AND BLUEPRINTS CONTAINING THIS DESIGN ARE AND SHALL REMAIN THE EXCLUSIVE PROPERTY OF WESTERN ALLIED CORPORATION AND MAY NOT BE USED FOR ANY PURPOSE WHATSOEVER. ANY REPRODUCTIONS OF PRINTS OR COPIES THEREOF DOES NOT CONSTITUTE A PUBLICATION THEREOF.
THESE DRAWINGS OR BLUEPRINTS ARE SUBMITTED TO YOU SOLELY FOR THE PURPOSE OF TRANSACTING A SALE BY WESTERN ALLIED CORPORATION OF THE MECHANICAL SYSTEM INCORPORATED IN THE DESIGN.
ANY COMMUNICATION OF THIS DESIGN WITHOUT THE CONSENT OF WESTERN ALLIED CORPORATION CONSTITUTES A VIOLATION OF THE LAWS OF THIS STATE.

WESTERN ALLIED CORPORATION
STATE CONTRACTOR LICENSE NO. 198821
MECHANICAL CONTRACTORS
SANTA FE SPRINGS
(562) 944-6341 / FAX (562) 944-7092
MENLO PARK
(650) 326-0750 / FAX (650) 321-4946

JOB TITLE: ONTARIO POLICE DEPARTMENT HEADQUARTERS 2534 SOUTH ARCHIBALD ONTARIO, CALIFORNIA

SHEET TITLE: FLOOR PLAN - FIRST LEVEL - AREA 1

NO.	REVISIONS	DRAWN	CHECKER	DATE ISSUED
1	PLAN CHECK SUBMITTAL	TDN	MT	05/16/2003
2	PLAN CHECK CORRECTIONS	TDN	MT	06/17/2003

DATE:	04/16/2003
DRAWN BY:	T.D.N.
CHECKED BY:	M.T.
SCALE:	1/8"=1'-0"
JOB NO. :	11755

M-2.1.1
SHEET NO.

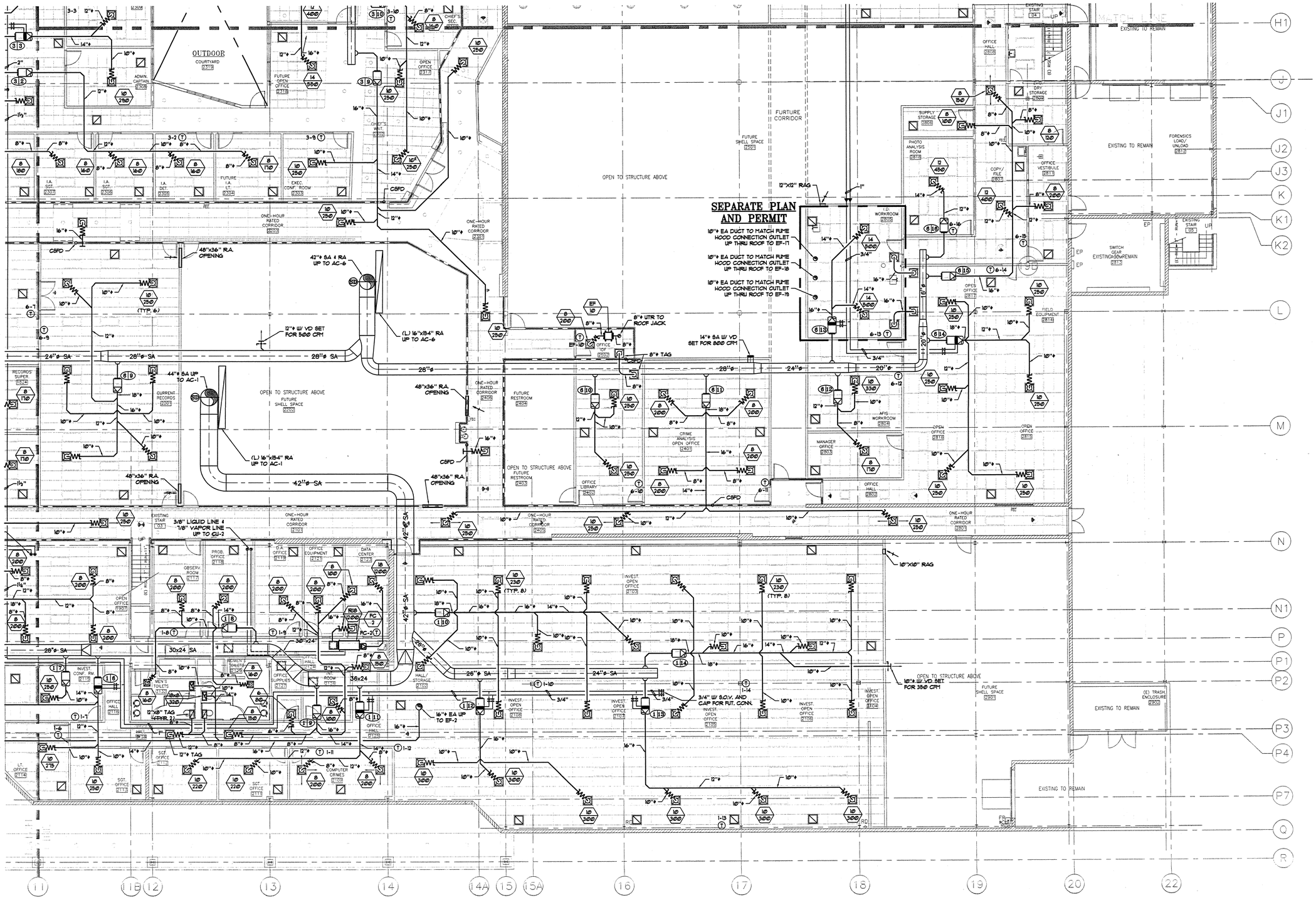

GENERAL NOTES:

1. REFER TO SHEET M-2.2 FOR ZONE SCHEDULES
2. CEILING SPACES USED AS RETURN AIR PLENUMS SHALL COMPLY WITH ALL THE PROVISIONS OF UMC SECTIONS 601. CORRIDORS OR SPACES ABOVE CORRIDORS REQUIRED TO BE OF FIRE RESISTIVE CONSTRUCTION SHALL NOT BE USED AS PART OF A SUPPLY OR RETURN AIR DUCT SYSTEM, IN ACCORDANCE WITH UMC SECTION 601.1.

RECORD DRAWING
02/04/2004

THIS DESIGN IS THE EXCLUSIVE PROPERTY OF WESTERN ALLIED CORPORATION. THE DRAWINGS AND BLUEPRINTS CONTAINING THIS DESIGN ARE, AND SHALL REMAIN THE PROPERTY OF WESTERN ALLIED CORPORATION. THE DELIVERY OF THE ORIGINAL PRINTS OR COPIES THEREOF DOES NOT CONSTITUTE A PUBLICATION THEREOF.

THESE DRAWINGS OR BLUEPRINTS ARE EXHIBITED TO YOU SOLELY FOR THE PURPOSE OF TRANSACTING A SALE BY WESTERN ALLIED CORPORATION OF THE MECHANICAL SYSTEM INCORPORATED IN THE DESIGN. ANY COMMUNICATION OF THIS DESIGN WITHOUT THE CONSENT OF WESTERN ALLIED CORPORATION CONSTITUTES A VIOLATION OF THE LAWS OF THIS STATE.

WESTERN ALLIED CORPORATION
STATE CONTRACTOR LICENSE NO. 198821
MECHANICAL CONTRACTORS
SANTA FE SPRINGS
(562) 944-6341 / FAX (562) 944-7092
MERCED, CA95
(650) 326-00750 / FAX (650) 321-4946

JOB TITLE: ONTARIO POLICE DEPARTMENT
HEADQUARTERS
2534 SOUTH ARCHIBALD
ONTARIO, CALIFORNIA

SHEET TITLE: FLOOR PLAN - FIRST LEVEL - AREA 2

NO.	REVISIONS	DRAWN	CHECKED	DATE ISSUED
	PLAN CHECK CORRECTIONS	TDN	MT	06/17/2003
	PLAN CHECK SUBMITTAL	TDN	MT	05/16/2003

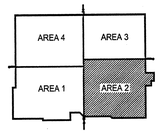

DATE:	04/16/2003
DRAWN BY:	T.D.N.
CHECKED BY:	M.T.
SCALE:	1/8"=1'-0"
JOB NO. :	11755

M-2.1.2
SHEET NO.

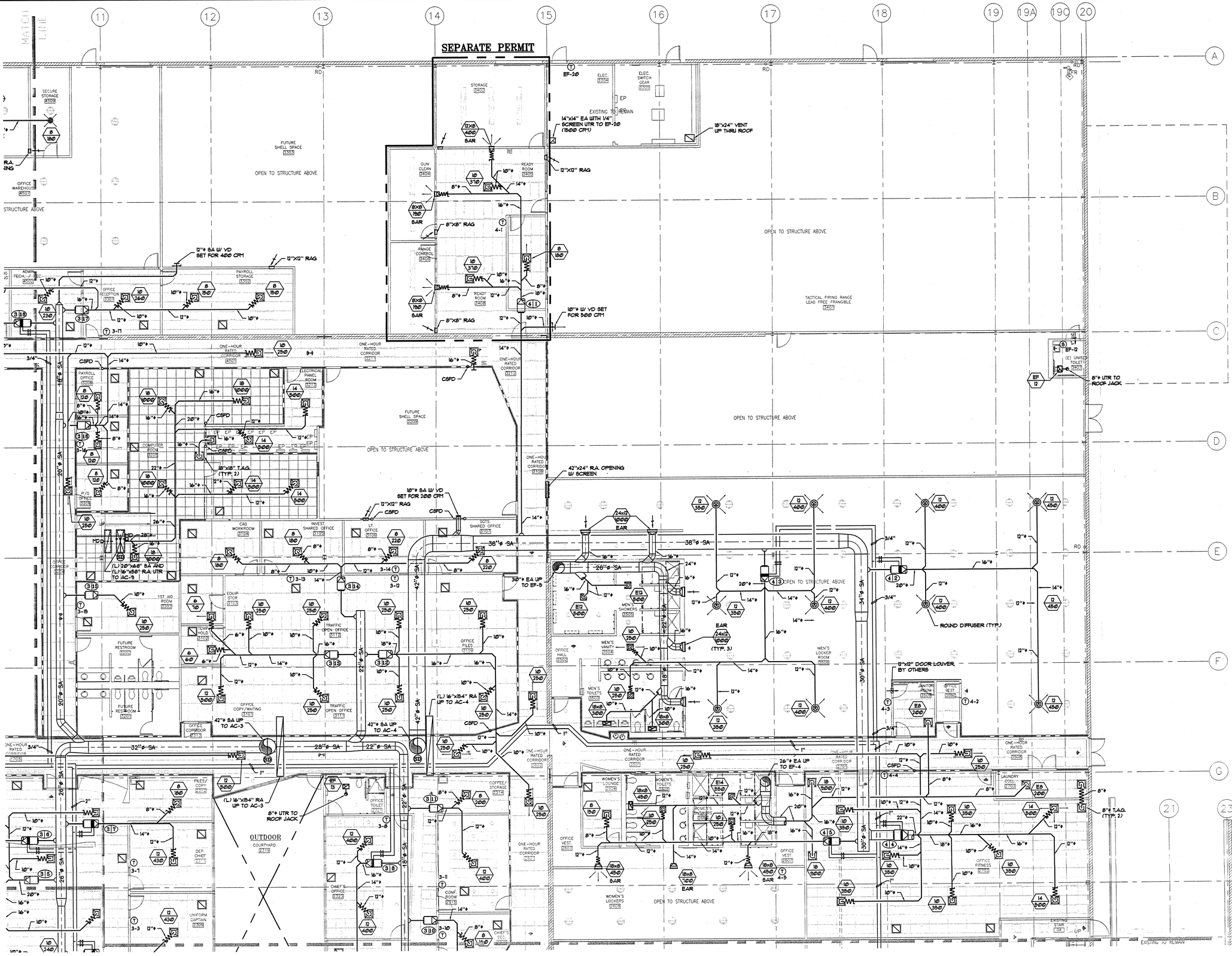

GENERAL NOTES:

1. REFER TO SHEET M-2.2 FOR ZONE SCHEDULES
2. CEILING SPACES USED AS RETURN AIR PLENUMS SHALL COMPLY WITH ALL THE PROVISIONS OF UMC SECTIONS 601. CORRIDORS OR SPACES ABOVE CORRIDORS REQUIRED TO BE OF FIRE RESISTIVE CONSTRUCTION SHALL NOT BE USED AS PART OF A SUPPLY OR RETURN AIR DUCT SYSTEM, IN ACCORDANCE WITH UMC SECTION 601.1.

RECORD DRAWING
02/04/2004

THIS DESIGN IS THE EXCLUSIVE PROPERTY OF WESTERN ALLIED CORPORATION. THE DRAWINGS AND BLUEPRINTS CONTAINING THIS DESIGN ARE AND SHALL REMAIN THE PROPERTY OF WESTERN ALLIED CORPORATION. THE DELIVERY OF THE ORIGINAL PRINTS OR COPIES THEREOF DOES NOT CONSTITUTE A PUBLICATION THEREOF.

THESE DRAWINGS OR BLUEPRINTS ARE EXHIBITED TO YOU SOLELY FOR THE PURPOSE OF TRANSACTING A SALE BY WESTERN ALLIED CORPORATION OF THE MATERIALS AND EQUIPMENT SHOWN IN THE DESIGN. ANY COMMUNICATION OF THIS DESIGN WITHOUT THE CONSENT OF WESTERN ALLIED CORPORATION CONSTITUTES A VIOLATION OF THE LAWS OF THIS STATE.

WESTERN ALLIED CORPORATION
STATE CONTRACTOR LICENSE NO. 198821
MECHANICAL CONTRACTORS
SANTA FE SPRINGS
(562) 944-6341 / FAX (562) 944-7092
BERKELEY
(650) 326-0750 / FAX (650) 321-4946

JOB TITLE: ONTARIO POLICE DEPARTMENT
HEADQUARTERS
2534 SOUTH ARCHIBALD
ONTARIO, CALIFORNIA

SHEET TITLE: FLOOR PLAN - FIRST LEVEL - AREA 3

NO.	REVISIONS	DRAWN	CHECKER	DATE ISSUED
	PLAN CHECK CORRECTIONS	TDN	MT	06/17/2003
	PLAN CHECK SUBMITTAL	TDN	MT	05/16/2003

DATE:	04/16/2003
DRAWN BY:	T.D.N.
CHECKED BY:	M.T.
SCALE:	1/8"=1'-0"
JOB NO. :	11755

M-2.1.3
SHEET NO.

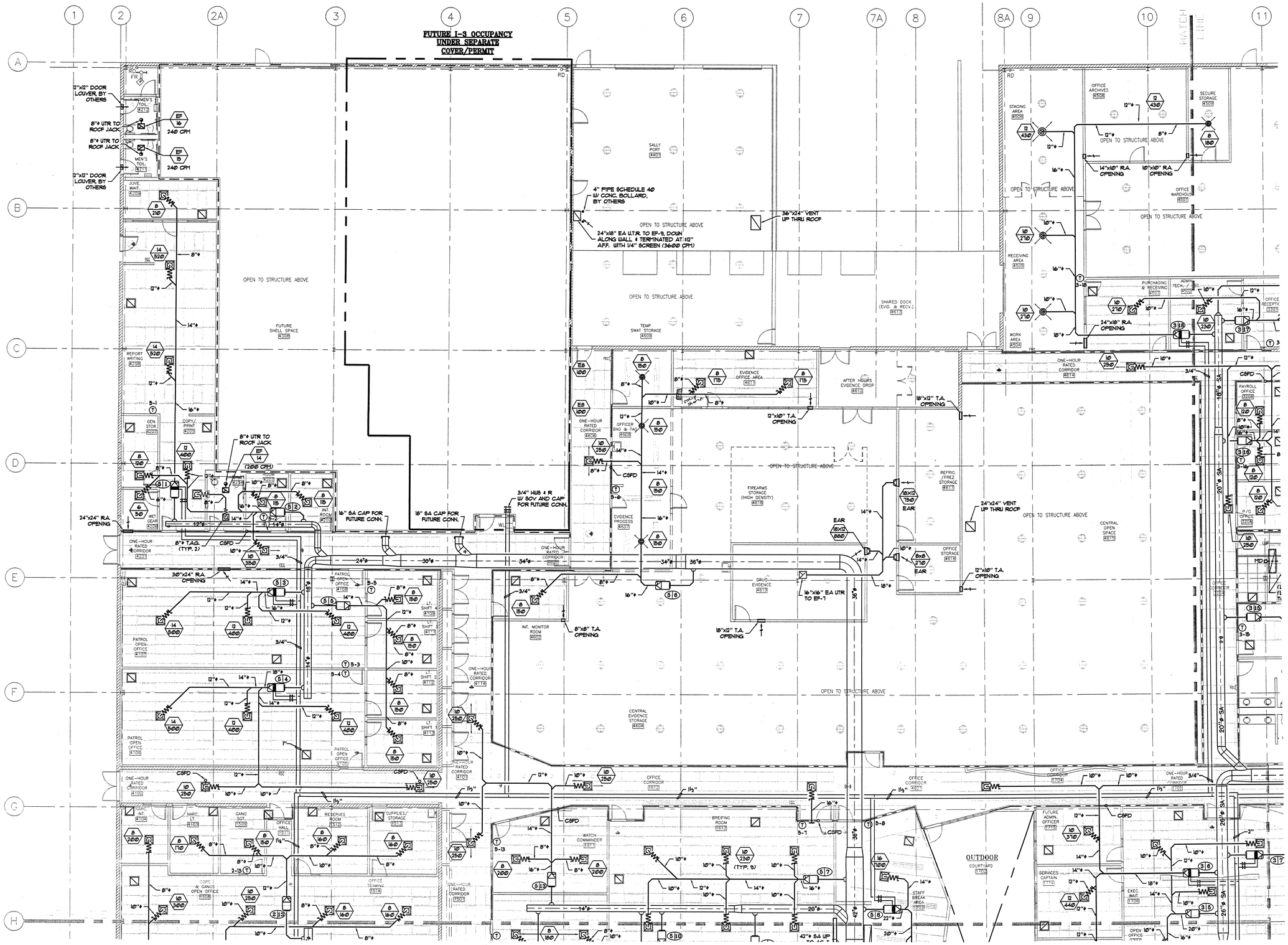

GENERAL NOTES:

1. REFER TO SHEET M-2.2 FOR ZONE SCHEDULES
2. CEILING SPACES USED AS RETURN AIR PLENUMS SHALL COMPLY WITH ALL THE PROVISIONS OF UMC SECTIONS 601. CORRIDORS OR SPACES ABOVE CORRIDORS REQUIRED TO BE OF FIRE RESISTIVE CONSTRUCTION SHALL NOT BE USED AS PART OF A SUPPLY OR RETURN AIR DUCT SYSTEM, IN ACCORDANCE WITH UMC SECTION 601.1.

AREA 4 | AREA 3
AREA 1 | AREA 2

RECORD DRAWING
02/04/2004

THIS DESIGN IS THE EXCLUSIVE PROPERTY OF WESTERN ALLIED CORPORATION. THE DRAWINGS AND BLUEPRINTS CONTAINING THIS DESIGN ARE, AND SHALL REMAIN THE PROPERTY OF WESTERN ALLIED CORPORATION. THE DESIGN IS NOT TO BE USED IN PART OR WHOLE, EXCEPT IN THE CASE OF PERSONAL PRINTS OF COPIES THEREOF DOES NOT CONSTITUTE A PUBLICATION THEREOF.

THESE DRAWINGS OR BLUEPRINTS ARE EXHIBITED TO YOU SOLELY FOR THE PURPOSE OF TRANSACTING A SALE BY WESTERN ALLIED CORPORATION OF THE MECHANICAL SYSTEM INCORPORATED IN THE DESIGN.

ANY COMMUNICATION OF THIS DESIGN WITHOUT THE CONSENT OF WESTERN ALLIED CORPORATION CONSTITUTES A VIOLATION OF THE LAWS OF THIS STATE.

WESTERN ALLIED CORPORATION
STATE CONTRACTOR LICENSE NO. 198821
MECHANICAL CONTRACTORS
SANTA FE SPRINGS
(562) 944-8341 / FAX (562) 944-7032
MENLO PARK
(650) 326-0750 / FAX (650) 321-4946

JOB TITLE: ONTARIO POLICE DEPARTMENT
HEADQUARTERS
2534 SOUTH ARCHIBALD
ONTARIO, CALIFORNIA

SHEET TITLE: FLOOR PLAN - FIRST LEVEL - AREA 4

NO.	REVISIONS	DRAWN	CHECKER	DATE ISSUED
	PLAN CHECK CORRECTIONS	TDN	MT	06/17/2003
	PLAN CHECK SUBMITTAL	TDN	MT	05/16/2003

DATE:	04/16/2003
DRAWN BY:	T.D.N.
CHECKED BY:	M.T.
SCALE:	1/8"=1'-0"
JOB NO. :	11755

M-2.1.4
SHEET NO.

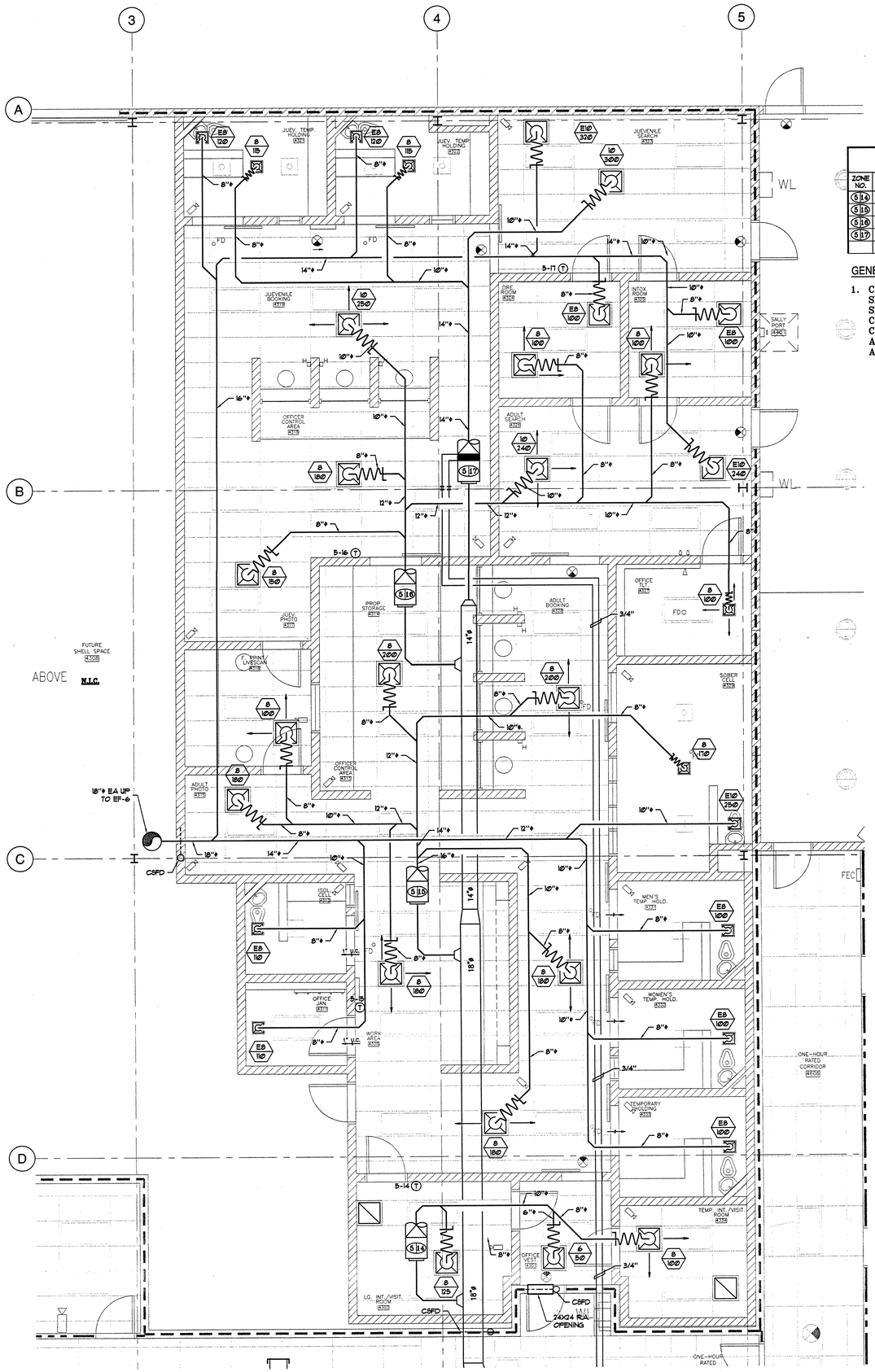

ZONE SCHEDULE FOR AC-5

ZONE NO.	BOX SIZE	AIR QUANTITIES (CFM) MAXIMUM	AIR QUANTITIES (CFM) MINIMUM	ROWS / GPM	PIPE SIZES	CONTROL VALVE	REMARKS
5 14	8	275	60	- / -	-	-	INTERIOR ZONE
5 15	12	1220	360	- / -	-	-	INTERIOR ZONE
5 16	10	1120	330	- / -	-	-	INTERIOR ZONE
5 17	8	430	160	2 / -	1/2"	3-WAY	EXTERIOR ZONE

GENERAL NOTES:

1. CEILING SPACES USED AS RETURN AIR PLENUMS SHALL COMPLY WITH ALL THE PROVISIONS OF UMC SECTIONS 601. CORRIDORS OR SPACES ABOVE CORRIDORS REQUIRED TO BE OF FIRE RESISTIVE CONSTRUCTION SHALL NOT BE USED AS PART OF A SUPPLY OR RETURN AIR DUCT SYSTEM, IN ACCORDANCE WITH UMC SECTION 601.1.

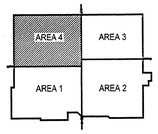

RECORD DRAWING
02/04/2004

THIS DESIGN IS THE EXCLUSIVE PROPERTY OF WESTERN ALLIED CORPORATION. THE DRAWINGS AND BLUEPRINTS CONTAINING THIS DESIGN ARE AND SHALL REMAIN THE PROPERTY OF WESTERN ALLIED CORPORATION. THE DELIVERY OF THE ORIGINAL PRINTS OR COPIES THEREOF DOES NOT CONSTITUTE A PUBLICATION THEREOF.

THESE DRAWINGS OR BLUEPRINTS ARE EXHIBITED TO YOU SOLELY FOR THE PURPOSE OF TRANSACTING A SALE BY WESTERN ALLIED CORPORATION OF THE MECHANICAL SYSTEM INCORPORATED IN THE DESIGN.

ANY COMMUNICATION OF THIS DESIGN WITHOUT THE CONSENT OF WESTERN ALLIED CORPORATION CONSTITUTES A VIOLATION OF THE LAWS OF THIS STATE.

WESTERN ALLIED CORPORATION
STATE CONTRACTOR LICENSE NO. 198821
MECHANICAL CONTRACTORS
SANTA FE SPRINGS
(562) 944-6341 / FAX (562) 944-7092
MENLO PARK
(650) 326-0750 / FAX (650) 321-4946

JOB TITLE: ONTARIO POLICE DEPARTMENT
HEADQUARTERS
2534 SOUTH ARCHIBALD
ONTARIO, CALIFORNIA

SHEET TITLE: FLOOR PLAN - FIRST LEVEL - AREA 4

NO.	REVISIONS	DRAWN	CHECKER	DATE ISSUED
1	PLAN CHECK CORRECTIONS	TDN	MT	06/17/2003
2	PLAN CHECK SUBMITTAL	TDN	MT	05/16/2003

DATE:	04/16/2003
DRAWN BY:	T.D.N.
CHECKED BY:	M.T.
SCALE:	1/8"=1'-0"
JOB NO. :	11755

M-2.1.4H

SHEET NO.

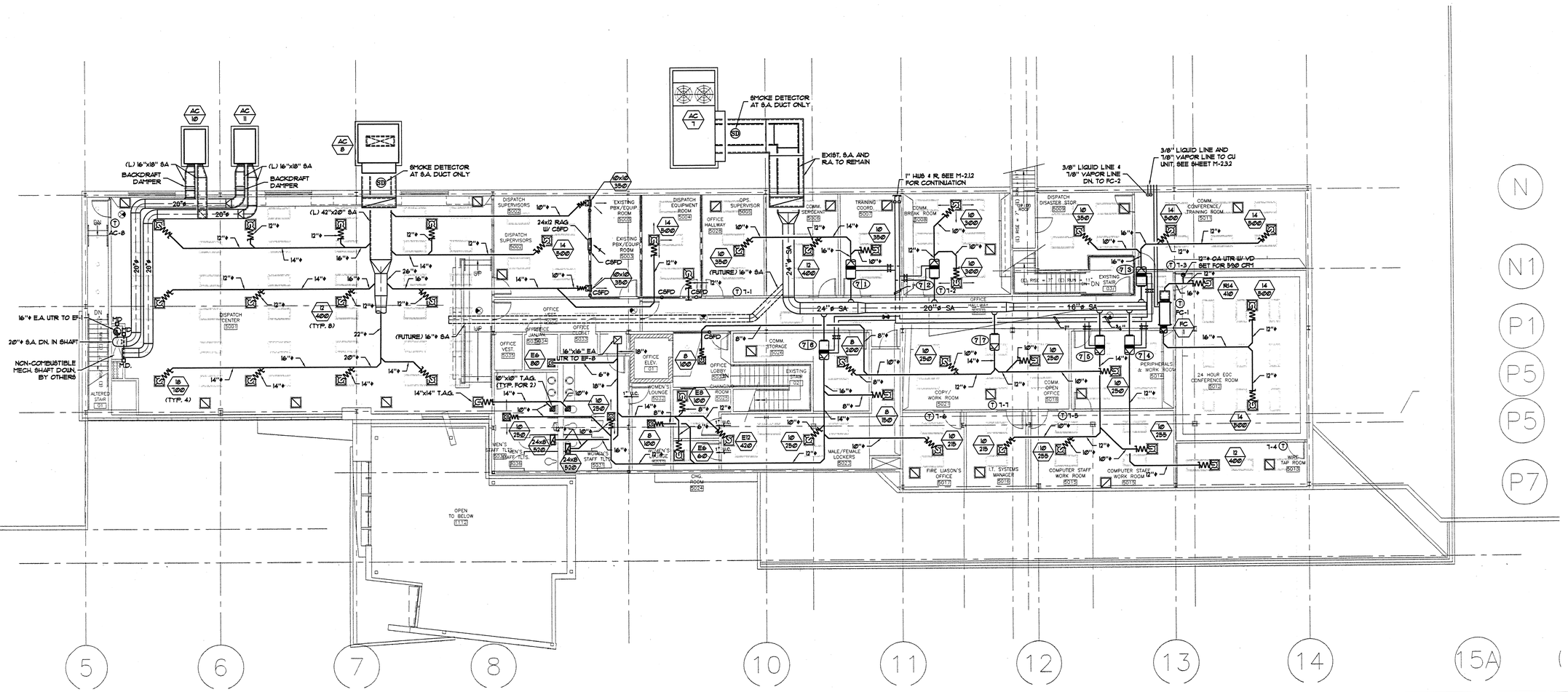

ZONE SCHEDULE FOR AC-1

ZONE NO.	BOX SIZE	AIR QUANTITIES (CFM) MAXIMUM	AIR QUANTITIES (CFM) MINIMUM	ROWS/GPM	PIPE SIZES	CONTROL VALVE	REMARKS
1 1	12	1600	640	2/14	1/2"	3-WAY	EXTERIOR ZONE
1 2	10	940	280	-/-	-	-	INTERIOR ZONE
1 3	12	1350	540	2/12	1/2"	2-WAY	EXTERIOR ZONE
1 4	8	480	150	-/-	-	-	INTERIOR ZONE
1 5	14	1720	510	-/-	-	-	INTERIOR ZONE
1 6	8	685	250	2/Ø.6	1/2"	2-WAY	EXTERIOR ZONE
1 7	8	250	75	-/-	-	-	INTERIOR ZONE
1 8	8	720	210	-/-	-	-	INTERIOR ZONE
1 9	12	980	240	-/-	-	-	INTERIOR ZONE
1 10	14	1840	540	-/-	-	-	INTERIOR ZONE
1 11	10	840	330	2/Ø.1	1/2"	2-WAY	EXTERIOR ZONE
1 12	10	900	360	2/Ø.8	1/2"	2-WAY	EXTERIOR ZONE
1 13	10	900	360	2/Ø.8	1/2"	3-WAY	EXTERIOR ZONE
1 14	14	2120	560	-/-	-	-	INTERIOR ZONE
1 15	10	2000	1000	2/14	1/2"	2-WAY	EXTERIOR ZONE
1 16	14	2000	1000	2/14	1/2"	2-WAY	EXTERIOR ZONE

ZONE SCHEDULE FOR AC-2

ZONE NO.	BOX SIZE	AIR QUANTITIES (CFM) MAXIMUM	AIR QUANTITIES (CFM) MINIMUM	ROWS/GPM	PIPE SIZES	CONTROL VALVE	REMARKS
2 1	22	4020	2000	2/4.5	3/4"	3-WAY	EXTERIOR ZONE
2 2	22	3080	1500	2/3.3	3/4"	2-WAY	EXTERIOR ZONE
2 3	8	600	300	2/Ø.7	1/2"	2-WAY	EXTERIOR ZONE
2 4	12	1100	440	2/1.4	1/2"	2-WAY	EXTERIOR ZONE
2 5	8	600	300	2/Ø.7	1/2"	2-WAY	EXTERIOR ZONE
2 6	12	1200	360	-/-	-	-	INTERIOR ZONE
2 7	8	400	120	-/-	-	-	INTERIOR ZONE
2 8	10	1080	300	-/-	-	-	INTERIOR ZONE
2 9	8	600	180	-/-	-	-	INTERIOR ZONE
2 10	8	700	210	-/-	-	-	INTERIOR ZONE
2 11	10	1000	300	-/-	-	-	INTERIOR ZONE
2 12	16	2400	1200	2/3.0	3/4"	2-WAY	EXTERIOR ZONE
2 13	8	640	180	-/-	-	-	INTERIOR ZONE
2 14	12	1600	480	-/-	-	-	INTERIOR ZONE
2 15	10	1110	330	-/-	-	-	INTERIOR ZONE
2 16	8	400	100	-/-	-	-	INTERIOR ZONE

ZONE SCHEDULE FOR AC-3

ZONE NO.	BOX SIZE	AIR QUANTITIES (CFM) MAXIMUM	AIR QUANTITIES (CFM) MINIMUM	ROWS/GPM	PIPE SIZES	CONTROL VALVE	REMARKS
3 1	8	540	110	-/-	-	-	INTERIOR ZONE
3 2	8	420	150	-/-	-	-	INTERIOR ZONE
3 3	8	720	280	2/Ø.6	1/2"	2-WAY	EXTERIOR ZONE
3 4	10	1000	400	2/1.0	1/2"	2-WAY	EXTERIOR ZONE
3 5	14	1520	800	-/-	-	-	INTERIOR ZONE
3 6	14	2260	910	2/1.6	1/2"	2-WAY	EXTERIOR ZONE
3 7	8	610	240	2/Ø.5	1/2"	2-WAY	EXTERIOR ZONE
3 8	12	1350	520	2/1.2	1/2"	2-WAY	EXTERIOR ZONE
3 9	10	1000	300	-/-	-	-	INTERIOR ZONE
3 10	8	660	190	-/-	-	-	INTERIOR ZONE
3 11	8	600	180	-/-	-	-	INTERIOR ZONE
3 12	14	1750	510	-/-	-	-	INTERIOR ZONE
3 13	12	1380	420	-/-	-	-	INTERIOR ZONE
3 14	10	800	240	-/-	-	-	INTERIOR ZONE
3 15	8	250	90	-/-	-	-	INTERIOR ZONE
3 16	10	1110	330	-/-	-	-	INTERIOR ZONE
3 17	10	1060	320	-/-	-	-	INTERIOR ZONE
3 18	12	1580	600	2/1.5	1/2"	3-WAY	EXTERIOR ZONE

ZONE SCHEDULE FOR AC-7

ZONE NO.	BOX SIZE	AIR QUANTITIES (CFM) MAXIMUM	AIR QUANTITIES (CFM) MINIMUM	ROWS/GPM	PIPE SIZES	CONTROL VALVE	REMARKS
7 1	10	1100	440	2/1	1/2"	2-WAY	EXTERIOR ZONE
7 2	8	600	240	2/Ø.5	1/2"	2-WAY	EXTERIOR ZONE
7 3	12	1350	540	2/1.2	1/2"	3-WAY	EXTERIOR ZONE
7 4	8	400	120	2/Ø.3	1/2"	2-WAY	EXTERIOR ZONE
7 5	8	725	280	2/Ø.6	1/2"	2-WAY	EXTERIOR ZONE
7 6	12	1215	480	2/1.1	1/2"	2-WAY	EXTERIOR ZONE
7 7	10	1050	200	-/-	-	-	INTERIOR ZONE

ZONE SCHEDULE FOR AC-4

ZONE NO.	BOX SIZE	AIR QUANTITIES (CFM) MAXIMUM	AIR QUANTITIES (CFM) MINIMUM	ROWS/GPM	PIPE SIZES	CONTROL VALVE	REMARKS
4 1	12	1700	450	-/-	-	-	INTERIOR ZONE
4 2	14	2150	1000	2/2.5	3/4"	2-WAY	EXTERIOR ZONE
4 3	16	2750	1900	2/2.9	3/4"	3-WAY	EXTERIOR ZONE
4 4	22	3600	2160	2/3.6	3/4"	2-WAY	EXTERIOR ZONE
4 5	12	1550	800	2/1.8	3/4"	2-WAY	EXTERIOR ZONE

ZONE SCHEDULE FOR AC-5

ZONE NO.	BOX SIZE	AIR QUANTITIES (CFM) MAXIMUM	AIR QUANTITIES (CFM) MINIMUM	ROWS/GPM	PIPE SIZES	CONTROL VALVE	REMARKS
5 1	12	1250	500	2/-	1/2"	3-WAY	EXTERIOR ZONE
5 2	12	1250	360	-/-	-	-	INTERIOR ZONE
5 3	12	1300	520	2/-	1/2"	2-WAY	EXTERIOR ZONE
5 4	14	1800	720	2/-	1/2"	2-WAY	EXTERIOR ZONE
5 5	8	600	180	-/-	-	-	INTERIOR ZONE
5 6	12	1350	350	-/-	-	-	INTERIOR ZONE
5 7	12	1380	400	-/-	-	-	INTERIOR ZONE
5 8	16	2800	840	-/-	-	-	INTERIOR ZONE
5 9	12	1435	420	-/-	-	-	INTERIOR ZONE
5 10	8	500	150	-/-	-	-	INTERIOR ZONE
5 11	8	360	90	-/-	-	-	INTERIOR ZONE
5 12	8	600	180	-/-	-	-	INTERIOR ZONE
5 13	10	1150	330	-/-	-	-	INTERIOR ZONE
5 14	8	215	60	-/-	-	-	INTERIOR ZONE
5 15	12	1390	360	-/-	-	-	INTERIOR ZONE
5 16	10	1120	330	-/-	-	-	INTERIOR ZONE
5 17	8	930	160	2/-	1/2"	3-WAY	EXTERIOR ZONE

ZONE SCHEDULE FOR AC-6

ZONE NO.	BOX SIZE	AIR QUANTITIES (CFM) MAXIMUM	AIR QUANTITIES (CFM) MINIMUM	ROWS/GPM	PIPE SIZES	CONTROL VALVE	REMARKS
6 1	10	745	210	-/-	-	-	INTERIOR ZONE
6 2	8	500	150	-/-	-	-	INTERIOR ZONE
6 3	12	1200	360	-/-	-	-	INTERIOR ZONE
6 4	8	630	90	-/-	-	-	INTERIOR ZONE
6 5	8	320	90	-/-	-	-	INTERIOR ZONE
6 6	12	1680	480	-/-	-	-	INTERIOR ZONE
6 7	12	1740	500	-/-	-	-	INTERIOR ZONE
6 8	10	840	320	-/-	-	-	INTERIOR ZONE
6 9	12	1500	450	-/-	-	-	INTERIOR ZONE
6 10	8	500	150	-/-	-	-	INTERIOR ZONE
6 11	12	1550	450	-/-	-	-	INTERIOR ZONE
6 12	8	500	150	-/-	-	-	INTERIOR ZONE
6 13	10	1000	500	-/-	-	-	INTERIOR ZONE
6 14	12	1500	800	2/-	1/2"	3-WAY	EXTERIOR ZONE
6 15	10	970	400	2/-	1/2"	2-WAY	EXTERIOR ZONE
6 16	8	450	130	-/-	-	-	INTERIOR ZONE

GENERAL NOTES:

1. CEILING SPACES USED AS RETURN AIR PLENUMS SHALL COMPLY WITH ALL THE PROVISIONS OF UMC SECTIONS 601. CORRIDORS OR SPACES ABOVE CORRIDORS REQUIRED TO BE OF FIRE RESISTIVE CONSTRUCTION SHALL NOT BE USED AS PART OF A SUPPLY OR RETURN AIR DUCT SYSTEM, IN ACCORDANCE WITH UMC SECTION 601.1.

RECORD DRAWING
02/04/2004

THIS DESIGN IS THE EXCLUSIVE PROPERTY OF WESTERN ALLIED CORPORATION. THE DRAWINGS AND BLUEPRINTS CONTAINING THIS DESIGN ARE AND SHALL REMAIN THE PROPERTY OF WESTERN ALLIED CORPORATION. THE FURNISHING OF THESE ORIGINAL PRINTS OR COPIES THEREOF DOES NOT CONSTITUTE A PUBLICATION OF THE DESIGN.
THESE DRAWINGS OR BLUEPRINTS ARE EXHIBITED TO YOU SOLELY FOR THE PURPOSE OF ENABLING YOU TO EVALUATE WHETHER TO HIRE WESTERN ALLIED CORPORATION OF THE USE OF SYSTEMS INCORPORATED IN THE DESIGN.
ANY COMMUNICATION OF THIS DESIGN WITHOUT THE CONSENT OF WESTERN ALLIED CORPORATION CONSTITUTES A VIOLATION OF THE LAWS OF THIS STATE.

WESTERN ALLIED CORPORATION
STATE CONTRACTOR LICENSE NO. 199821
MECHANICAL CONTRACTORS
SANTA FE SPRINGS
(562) 944-6341 / FAX (562) 944-7092
REDWOOD CITY
(650) 326-0700 / FAX (650) 321-4946

JOB TITLE: ONTARIO POLICE DEPARTMENT
HEADQUARTERS
2534 SOUTH ARCHIBALD
ONTARIO, CALIFORNIA

SHEET TITLE: HVAC - FLOOR PLAN - SECOND LEVEL

NO.	REVISIONS	DRAWN	DATE ISSUED
	PLAN CHECK CORRECTIONS	TDN	06/17/2003
	PLAN CHECK SUBMITTAL	TDN	05/16/2003

DATE:	04/16/2003
DRAWN BY:	T.D.N.
CHECKED BY:	M.T.
SCALE:	1/16"=1'-0"
JOB NO. :	11755

M-2.2
SHEET NO.

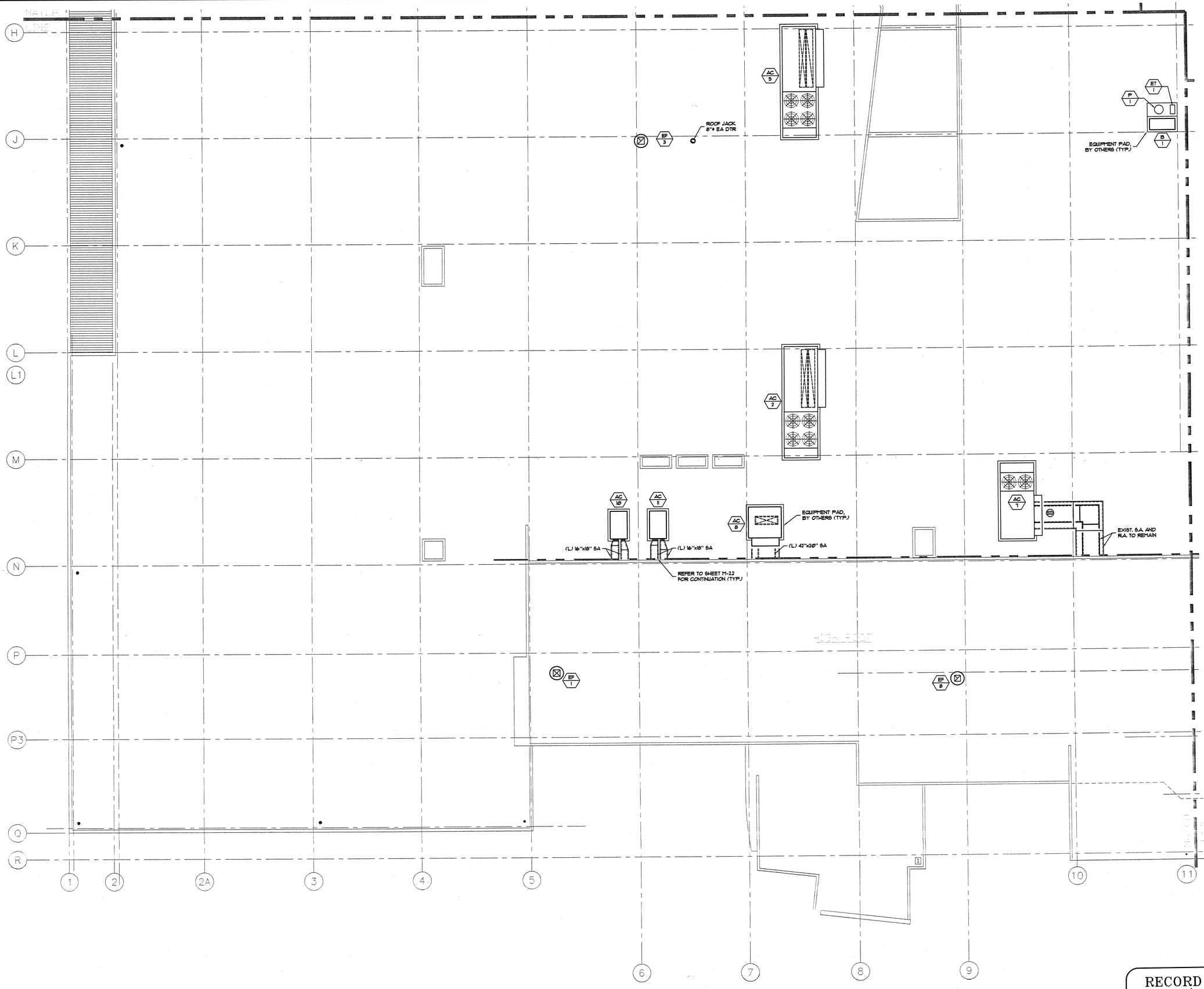

THIS DESIGN IS THE EXCLUSIVE PROPERTY OF WESTERN ALLIED CORPORATION. THE DRAWINGS AND WORKING DETAILS SHOWN HEREON ARE THE PROPERTY OF WESTERN ALLIED CORPORATION. THE DELIVERY OF THE ORIGINAL PRINTS OR COPIES THEREOF DOES NOT CONSTITUTE A PUBLICATION THEREOF.

THESE DRAWINGS OR BLUEPRINTS ARE EXHIBITED TO YOU SOLELY FOR THE PURPOSE OF TRANSACTING A SALE BY WESTERN ALLIED CORPORATION OF THE MECHANICAL SYSTEM INCORPORATED IN THE DESIGN.

ANY COMMUNICATION OF THIS DESIGN WITHOUT THE CONSENT OF WESTERN ALLIED CORPORATION CONSTITUTES A VIOLATION OF THE LAWS OF THIS STATE.

WESTERN ALLIED CORPORATION
STATE CONTRACTOR LICENSE NO. 198821
MECHANICAL CONTRACTORS
SANTA FE SPRINGS
(562) 944-6341 / FAX (562) 944-7092
MENLO PARK
(650) 328-0750 / FAX (650) 321-4946

JOB TITLE:
ONTARIO POLICE DEPARTMENT
HEADQUARTERS
2534 SOUTH ARCHIBALD
ONTARIO, CALIFORNIA

SHEET TITLE:
ROOF PLAN - AREA 1

NO.	REVISIONS	DRAWN	CHECKED	DATE ISSUED
	PLAN CHECK: CORRECTIONS	TDN	MT	06/17/2003
	PLAN CHECK: SUBMITTAL	TDN	MT	05/16/2003

DATE:	04/16/2003
DRAWN BY:	T.D.N.
CHECKED BY:	M.T.
SCALE:	1/8"=1'-0"
JOB NO. :	11755

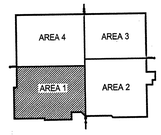

RECORD DRAWING
02/04/2004

M-2.3.1
SHEET NO.

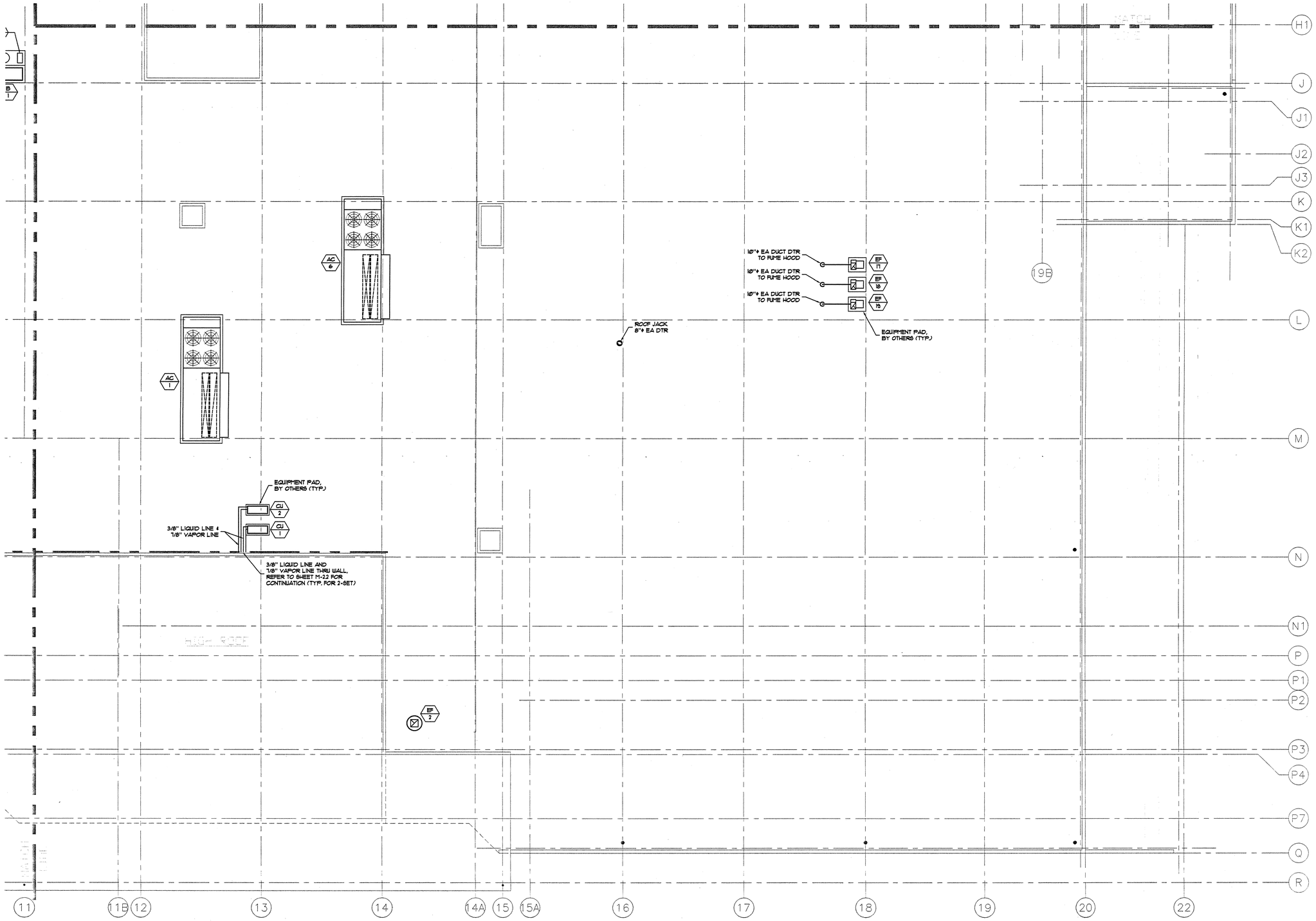

THIS DESIGN IS THE EXCLUSIVE PROPERTY OF WESTERN ALLIED CORPORATION. THE DRAWINGS AND BLUEPRINTS CONTAINING THIS DESIGN ARE AND SHALL REMAIN THE PROPERTY OF WESTERN ALLIED CORPORATION. THE DELIVERY OF THE ORIGINAL PRINTS OR COPIES THEREOF DOES NOT CONSTITUTE A PUBLICATION THEREOF.
THESE DRAWINGS OR BLUEPRINTS ARE EXHIBITED TO YOU SOLELY FOR THE PURPOSE OF REVIEWING THE SYSTEM DESIGNED BY WESTERN ALLIED CORPORATION OF THE MECHANICAL SYSTEM INCORPORATED IN THE DESIGN.
ANY COMMUNICATION OF THIS DESIGN WITHOUT THE CONSENT OF WESTERN ALLIED CORPORATION CONSTITUTES A VIOLATION OF THE LAWS OF THIS STATE.

WESTERN ALLIED CORPORATION
STATE CONTRACTOR LICENSE NO. 198821
MECHANICAL CONTRACTORS
SANTA FE SPRINGS
(562) 944-6341 / FAX (562) 944-7092
MENLO PARK
(650) 326-0750 / FAX (650) 321-4946

JOB TITLE: ONTARIO POLICE DEPARTMENT HEADQUARTERS 2534 SOUTH ARCHIBALD ONTARIO, CALIFORNIA

SHEET TITLE: ROOF PLAN - AREA 2

NO.	REVISIONS	DRAWN	CHECKER	DATE ISSUED
	PLAN CHECK CORRECTIONS	TDN	MT	06/17/2003
	PLAN CHECK SUBMITTAL	TDN	MT	05/16/2003

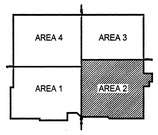

DATE:	04/16/2003
DRAWN BY:	T.D.N.
CHECKED BY:	M.T.
SCALE:	1/8"=1'-0"
JOB NO. :	11755

RECORD DRAWING
02/04/2004

M-2.3.2
SHEET NO.

MATCH LINE

11 12 13 14 15 16 17 18 19 19A 19C 20

A B C D E F G

21 23

LOREN COOK MODEL VR
RELIEF AIR VENT WITH
24"x18" THROAT

EF 2B

ROOF JACK
8"ø EA DTR

(L) 28"x68" SA AND
(L) 16"x58" RA DTR

AC 5

EF 5

AC 3

AC 4

ROOF JACK
8"ø EA DTR

EF 4

ET 1

MATCH LINE

AREA 4 | AREA 3
AREA 1 | AREA 2

RECORD DRAWING
02/04/2004

THIS DESIGN IS THE EXCLUSIVE PROPERTY OF WESTERN ALLIED CORPORATION. THE DRAWINGS AND BLUEPRINTS CONTAINING THIS DESIGN ARE AND SHALL REMAIN THE PROPERTY OF WESTERN ALLIED CORPORATION. THE DELIVERY OF THE ORIGINAL PRINTS OR COPIES THEREOF DOES NOT CONSTITUTE A PUBLICATION THEREOF.

THESE DRAWINGS OR BLUEPRINTS ARE EXHIBITED TO YOU SOLELY FOR THE PURPOSE OF TRANSACTING A SALE BY WESTERN ALLIED CORPORATION OF THE MECHANICAL SYSTEM INCORPORATED IN THE DESIGN.

ANY COMMUNICATION OF THIS DESIGN WITHOUT THE CONSENT OF WESTERN ALLIED CORPORATION CONSTITUTES A VIOLATION OF THE LAWS OF THIS STATE.

WESTERN ALLIED CORPORATION
STATE CONTRACTOR LICENSE NO. 198821
MECHANICAL CONTRACTORS
SANTA FE SPRINGS
(562) 944-6341 / FAX (562) 944-7092
MENLO PARK
(650) 326-0750 / FAX (650) 321-4946

JOB TITLE:
ONTARIO POLICE DEPARTMENT
HEADQUARTERS
2534 SOUTH ARCHIBALD
ONTARIO, CALIFORNIA

SHEET TITLE:
ROOF PLAN - AREA 3

NO.	REVISIONS	DRAWN	CHECKER	DATE ISSUED
1	PLAN CHECK CORRECTIONS	TDN	MT	06/17/2003
2	PLAN CHECK SUBMITTAL	TDN	MT	05/16/2003

DATE:	04/16/2003
DRAWN BY:	T.D.N.
CHECKED BY:	M.T.
SCALE:	1/8"=1'-0"
JOB NO. :	11755

M-2.3.3
SHEET NO.

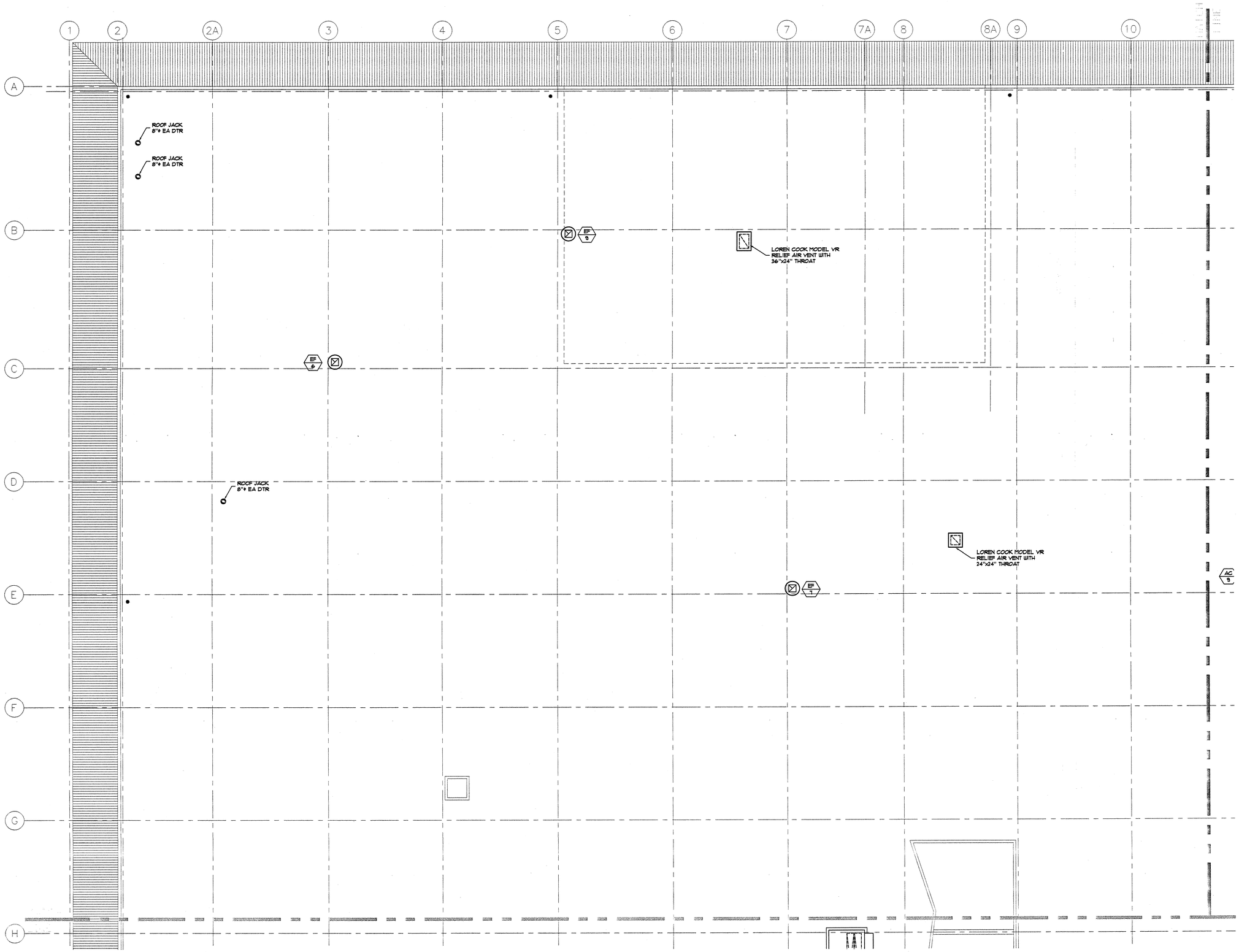

RECORD DRAWING
02/04/2004

THIS DESIGN IS THE EXCLUSIVE PROPERTY OF WESTERN ALLIED CORPORATION. THE DRAWINGS AND BLUEPRINTS CONTAINING THIS DESIGN ARE AND SHALL REMAIN THE PROPERTY OF WESTERN ALLIED CORPORATION. THE DELIVERY OF THE ORIGINAL PRINTS OR COPIES THEREOF DOES NOT CONSTITUTE A PUBLICATION THEREOF.

THESE DRAWINGS OR BLUEPRINTS ARE EXHIBITED TO YOU SOLELY FOR THE PURPOSE OF TRANSACTING A SALE BY WESTERN ALLIED CORPORATION OF THE MECHANICAL SYSTEM SHOWN THEREON AND NOT FOR ANY OTHER PURPOSE. ANY COMMUNICATION OF THIS DESIGN WITHOUT THE CONSENT OF WESTERN ALLIED CORPORATION CONSTITUTES A VIOLATION OF THE LAWS OF THIS STATE.

WESTERN ALLIED CORPORATION
STATE CONTRACTOR LICENSE NO. 198821
MECHANICAL CONTRACTORS
SANTA FE SPRINGS
(562) 944-6344 / FAX (562) 944-7092
MENLO PARK
(650) 328-0750 / FAX (650) 321-4946

JOB TITLE:
ONTARIO POLICE DEPARTMENT
HEADQUARTERS
2534 SOUTH ARCHIBALD
ONTARIO, CALIFORNIA

SHEET TITLE:
ROOF PLAN - AREA 4

NO.	REVISIONS	DRAWN	CHECKER	DATE ISSUED
1	PLAN CHECK CORRECTIONS	TDN	MT	06/17/2003
2	PLAN CHECK SUBMITTAL	TDN	MT	05/16/2003

DATE:	04/16/2003
DRAWN BY:	T.D.N.
CHECKED BY:	M.T.
SCALE:	1/8"=1'-0"
JOB NO. :	11755

M-2.3.4
SHEET NO.

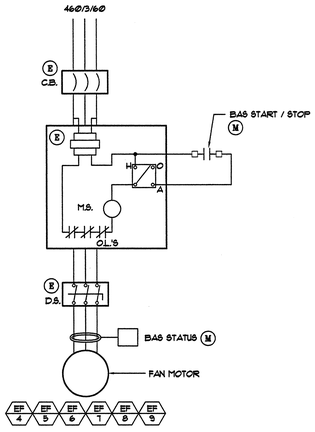

EXHAUST FANS

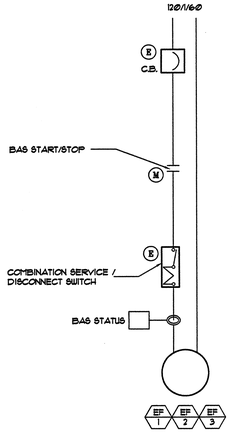

GENERAL EXHAUST FAN

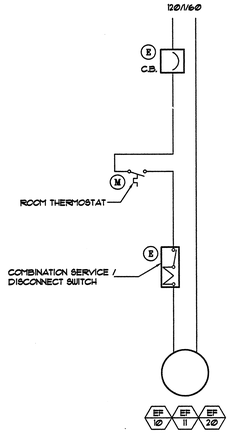

EXHAUST FAN WITH ROOM THERMOSTAT

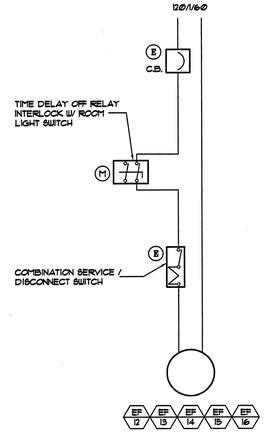

TOILET EXHAUST FAN

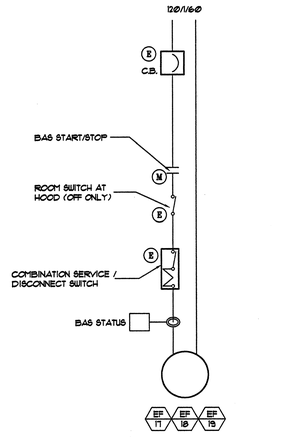

HOOD EXHAUST FAN

CONTROL WIRING LEGEND & NOTES

——#/——	INDICATES #18 TWISTED SHIELDED 2-CONDUCTOR CABLE IN CONDUIT AS REQUIRED BY ELECTRICAL CONTRACTOR, U.N.O.
— - — - —	INDICATES LOW VOLTAGE 24V. CONTROL WIRING AND CONDUIT BY ELECTRICAL CONTRACTOR, U.N.O.
———	INDICATES LINE VOLTAGE 120V. WIRING AND CONDUIT BY ELECTRICAL CONTRACTOR, U.N.O.
(E)	INDICATES ITEMS FURNISHED AND INSTALLED BY ELECTRICAL CONTRACTOR, INCLUDING: CIRCUIT BREAKERS, MAGNETIC STARTERS, DISCONNECT SWITCHES, HAND-OFF-AUTO SWITCHES, RELAYS, AND REMOTE SWITCHES, BUT NOT LIMITED THERETO.
(M)	INDICATES ITEMS FURNISHED AND INSTALLED BY MECHANICAL CONTRACTOR, BUT WIRED BY THE ELECTRICAL CONTRACTOR.
(ME)	INDICATES ITEMS FURNISHED BY MECHANICAL CONTRACTOR AND INSTALLED BY THE ELECTRICAL CONTRACTOR.
(EM)	INDICATES ITEMS FURNISHED BY ELECTRICAL CONTRACTOR AND INSTALLED BY MECHANICAL CONTRACTOR.
(L/S)	INDICATES ITEMS FURNISHED AND INSTALLED BY LIFE/SAFETY CONTRACTOR.
O.L.'S	OVERLOADS
C.B.	CIRCUIT BREAKER
M.S.	MAGNETIC STARTER
D.S.	DISCONNECT SWITCH
H.O.A.	HAND-OFF-AUTO SWITCH
D.I.	DIGITAL INPUT
D.O.	DIGITAL OUTPUT
A.I.	ANALOG INPUT
A.O.	ANALOG OUTPUT

WIRING LEGEND AND NOTES

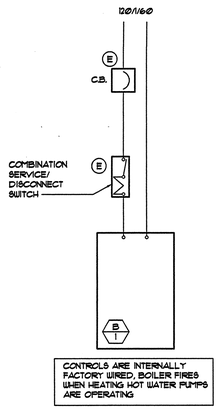

HEATING HOT WATER BOILER

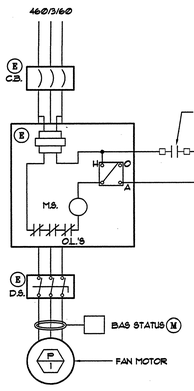

CIRCULATING PUMP

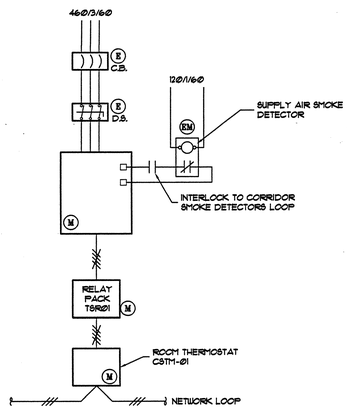

AC-8 CONTROL WIRING

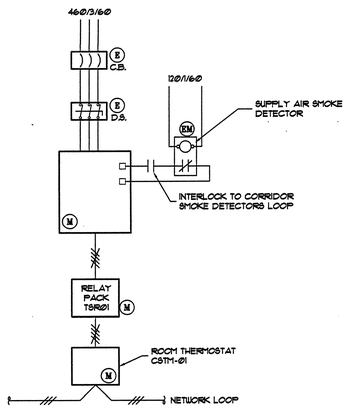

AC-9 CONTROL WIRING

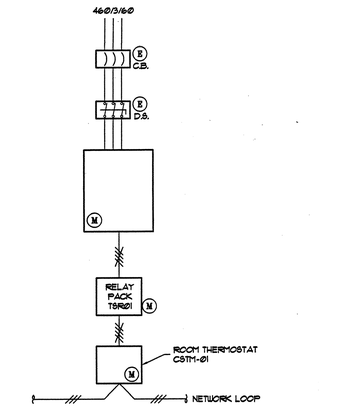

AC-10 & AC-11 CONTROL WIRING

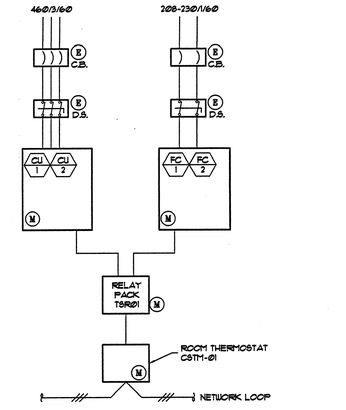

SPLIT SYSTEM AIR CONDITIONING CONTROL WIRING

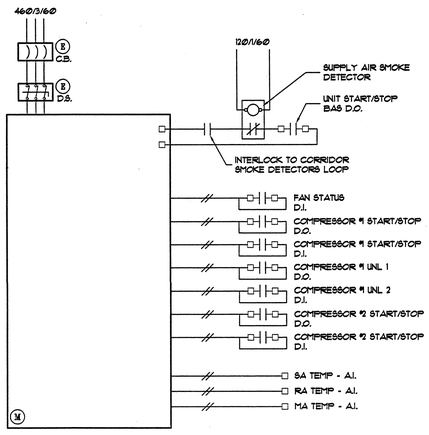

EXISTING AC-1 THRU AC-7 CONTROL

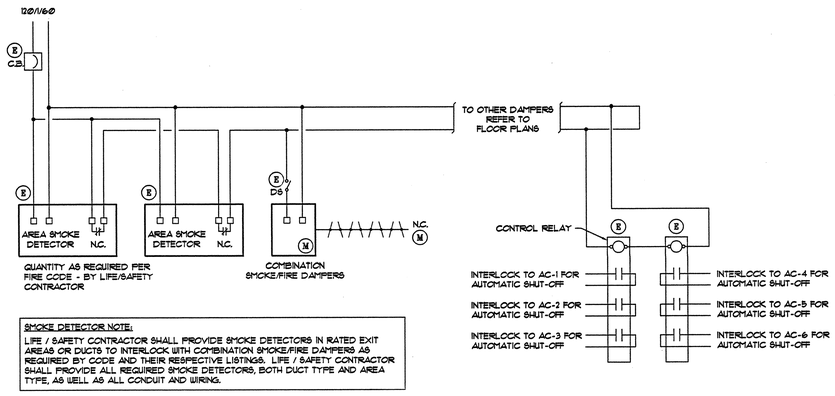

SMOKE DETECTOR NOTE:
LIFE / SAFETY CONTRACTOR SHALL PROVIDE SMOKE DETECTORS IN RATED EXIT AREAS OR DUCTS TO INTERLOCK WITH COMBINATION SMOKE/FIRE DAMPERS AS REQUIRED BY CODE AND THEIR RESPECTIVE LISTINGS. LIFE / SAFETY CONTRACTOR SHALL PROVIDE ALL REQUIRED SMOKE DETECTORS, BOTH DUCT TYPE AND AREA TYPE, AS WELL AS ALL CONDUIT AND WIRING.

CORRIDOR COMBINATION SMOKE/FIRE DAMPER CONTROL

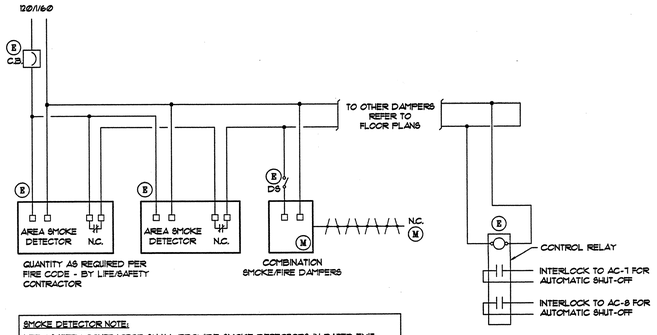

SMOKE DETECTOR NOTE:
LIFE / SAFETY CONTRACTOR SHALL PROVIDE SMOKE DETECTORS IN RATED EXIT AREAS OR DUCTS TO INTERLOCK WITH COMBINATION SMOKE/FIRE DAMPERS AS REQUIRED BY CODE AND THEIR RESPECTIVE LISTINGS. LIFE / SAFETY CONTRACTOR SHALL PROVIDE ALL REQUIRED SMOKE DETECTORS, BOTH DUCT TYPE AND AREA TYPE, AS WELL AS ALL CONDUIT AND WIRING.

CORRIDOR COMBINATION SMOKE/FIRE DAMPER CONTROL

RECORD DRAWING
02/04/2004

THIS DESIGN IS THE EXCLUSIVE PROPERTY OF WESTERN ALLIED CORPORATION. THE DRAWINGS AND BLUEPRINTS CONTAINING THIS DESIGN ARE AND SHALL REMAIN THE PROPERTY OF WESTERN ALLIED CORPORATION. THE DELIVERY OF THE ORIGINAL PRINTS OR COPIES THEREOF DOES NOT CONSTITUTE A PUBLICATION THEREOF.

THESE DRAWINGS OR BLUEPRINTS ARE EXHIBITED TO YOU SOLELY FOR THE PURPOSE OF TRANSACTING A SALE BY WESTERN ALLIED CORPORATION OF THE MECHANICAL SYSTEM INCORPORATED IN THE DESIGN.

ANY COMMUNICATION OF THIS DESIGN WITHOUT THE CONSENT OF WESTERN ALLIED CORPORATION CONSTITUTES A VIOLATION OF THE LAWS OF THIS STATE.

WESTERN ALLIED CORPORATION
STATE CONTRACTOR LICENSE NO. 198821
MECHANICAL CONTRACTORS
SANTA FE SPRINGS
(562) 944-6341 / FAX (562) 944-7092
REDDLE ESTATE
(650) 326-0700 / FAX (650) 321-4946

JOB TITLE:
ONTARIO POLICE DEPARTMENT
HEADQUARTERS
2534 SOUTH ARCHIBALD
ONTARIO, CALIFORNIA

SHEET TITLE:
HVAC - CONTROLS

NO.	REVISIONS	DRAWN	CHECKER	DATE ISSUED
	PLAN CHECK CORRECTIONS	TDN	MT	06/17/2003
	PLAN CHECK SUBMITTAL	TDN	MT	05/16/2003

DATE:	04/16/2003
DRAWN BY:	T.D.N.
CHECKED BY:	M.T.
SCALE:	NONE
JOB NO. :	11755

M-5.1

SHEET NO.

ALL IDEAS, DESIGN, ARRANGEMENTS AND PLANS INDICATED OR REPRESENTED BY THIS DRAWING ARE OWNED BY, AND THE PROPERTY OF CARRIER JOHNSON AND WERE CREATED, EVOLVED AND DEVELOPED FOR USE ON, AND IN CONNECTION WITH THIS PROJECT. NONE OF SUCH IDEAS, DESIGN, ARRANGEMENTS, OR PLANS SHALL BE USED BY, OR DISCLOSED TO ANY PERSON, FIRM, OR CORPORATION FOR ANY PURPOSE WHATSOEVER WITHOUT THE WRITTEN PERMISSION OF CARRIER JOHNSON. FILING THESE DRAWINGS OR SPECIFICATIONS WITH ANY PUBLIC AGENCY IS NOT A PUBLICATION OF SAME. NO COPYING, REPRODUCTION OR USE THEREOF IS PERMISSIBLE WITHOUT THE CONSENT OF CARRIER JOHNSON.

FIRE SPRINKLER NOTES

1. FIRE SPRINKLER SYSTEM IS A WET PIPE SPRINKLER SYSTEM PER NFPA 13, CURRENT EDITION AND THE LOCAL FIRE MARSHAL.
2. THE FIRE PROTECTION SYSTEM WILL BE DESIGNED TO CONFORM, AS A MINIMUM, WITH THE FOLLOWING CODES AND STANDARDS:
   - -THE UNIFORM BUILDING CODE, CURRENT EDITIONS.
   - -THE NATIONAL FIRE PROTECTION ASSOCIATION (NFPA), CURRENT EDITIONS.
   - -THE NATIONAL ELECTRICAL MANUFACTURERS ASSOCIATION (NEMA).
   - -AMERICAM SOCIETY OF TESTING MATERIALS (ASTM)
   - -AMERICAN WATER WORKS ASSOCIATION (AWWA)
   - -UNDERWRITERS LABORATORIES (UL)
   - -FACTORY MUTUAL (FM)
   - -OWNER'S INSURANCE UNDERWRITERS.
3. ENGINEERING CRITERIA:

   THE AUTOMATIC SPRINKLER SYSTEM SHALL BE DESIGNED IN ACCORDANCE WITH NFPA 13 INSTALLATION OF SPRINKLER SYSTEMS, NFPA 101, LIFE SAFETY, RELATED PUBLICATIONS, OWNERS INSURANCE UNDERWRITERS, AND AUTHORITIES HAVING JURISDICTION.
   REQUIRED DESIGN DENSITIES, FLOW RATES AND SPACING CRITERIA SHALL CONFORM TO ITS HAZARD CLASSIFICATIONS:
4. DISTRIBUTION SYSTEM, HYDRAULICALLY DESIGNED AND BALANCED, WILL INCLUDE:

   RISERS (MAXIMUM 52,000 SQUARE FEET PER RISER FOR LIGHT AND ORDINARY HAZARD OCCUPANCIES).

   FEED AND CROSS MAINS FOR SUPPLY TO RISERS AND BRANCHES. PROVIDE VALVES, FLOW SWITCHES, TAMPER SWITCHES AND AUTOMATIC SPRINKLERS.

   SIAMESE CONNECTIONS WILL BE PROVIDED AT THE BUILDING'S EXTERIOR TO ENABLE THE FIRE DEPARTMENT TO PUMP WATER DIRECTLY INTO TO THE SYSTEM AND SUPPLEMENT PRESSURE.

   SYSTEM WILL BE FULLY AUTOMATIC, WET SPRINKLER TYPE.

   PROVIDE A 10" ELECTRIC GONG, AT AUDIBLE LOCATIONS APPROVED BY THE LOCAL FIRE AUTHORITY.

   SUPPLY TO EACH INDIVIDUAL SPRINKLER SYSTEM WILL BE PROVIDED WITH MONITORED CONTROL VALVES AND WATER FLOW SWITCHES AS WELL AS A SYSTEM DRAIN/TEST CONNECTION.

   ALL SECTIONAL AND ISOLATING CONTROL VALVES AND WATER FLOW SWITCHES ON THE FIRE PROTECTION SYSTEM WILL BE PROVIDED WITH TAMPER SWITCHES WHICH WILL BE ANNUNCIATED AT THE LIFE SAFETY CONTROL PANEL.

   SPRINKLER DRAIN RISERS SHALL BE ROUTED TO AN APPROVED POINT OF DISCHARGE.
5. EQUIPMENT AND MATERIAL DESCRIPTION:

   EQUIPMENT AND MATERIAL INCORPORATED INTO FIRE PROTECTION WORK WILL BE NEW AND OF THE SAME TYPE AND MANUFACTURE FOR SIMILAR USES. WHERE INDUSTRY OR TRADE STANDARDS ARE IN FORCE, EQUIPMENT AND MATERIAL WILL COMPLY WITH THESE STANDARS AS A MINIMUM CRITERIA OF QUALITY AND WORKMANSHIP.
6. EQUIPMENT:

   EQUIPMENT - APPROVED MANUFACTURER.

   ALL MATERIALS SHALL BE U. L. AND FM APPROVED.
7. ANY REFERENCE TO THE FIRE SPRINKLER SYSTEM ON THESE PLANS, INCLUDING RISER AND F.D.C. LOCATIONS HAVE NOT BEEN APPROVED BY LOCAL FIRE MARSHAL. ANY REFERENCE TO THE FIRE SPRINKLER SYSTEM IS DEFERRED FOR APPROVAL BY THE LOCAL FIRE MARSHAL FOLLOWING RECEIPT OF DETAIL SHOP DRAWINGS.

GENERAL NOTES

1. NO PLUMBING SHALL BE INSTALLED UNTIL ALL REQUIRED PLUMBING PLAN CHECK PERMITS AND APPROVALS HAVE BEEN OBTAINED FROM ALL REQUIRED AGENCIES.
2. LAVATORY FAUCETS, SINK FAUCETS (NOT INCLUDING SERVICE SINK FAUCETS OR FAUCETS DESIGNATED AS INSTITUTIONAL) SHALL MEET THE FLOW REQUIREMENTS OUTLINED IN THE APPLIANCE EFFICIENCY STANDARDS.
3. COORDINATE WITH THE ARCHITECTURAL DRAWINGS FOR EXACT LOCATION OF PLUMBING FIXTURES AND DRAINS.
4. HOSE BIBBS SHALL BE PROTECTED BY AN APPROVED NON-REMOVABLE TYPE BACKFLOW PROTECTION DEVICE. HOSE BIBBS SHALL BE MOUNTED AT 18" ABOVE FLOOR UNLESS OTHERWISE NOTED.
5. PROVIDE ALL TAILPIECES, TRAPS, STOPS, SUPPLY PIPES TO LAVATORIES DESIGNED AS ACCESSIBLE, WITH PREFORMED INSULATION JACKET.
6. COORDINATE AND VERIFY SIZES, LOCATIONS, DEPTHS AND PIPING PRESSURES OF ALL BUILDING UTILITIES WITH CIVIL.
7. COORDINATE AND SCHEDULE TIMING FOR UTILITY SERVICE CONNECTION.
8. ALL LINES BELOW SLAB ON GRADE TO BE LOCATED AWAY FROM ALL LOAD BEARING FOOTINGS.
9. ALL LINES RUNNING BELOW GRADE BEAMS OR PENETRATING, SEE STRUCTURAL DRAWINGS FOR CONSTRUCTION.
10. ALL VENTS THRU ROOF SHALL BE MINIMUM OF 18 INCHES VERTICAL AND TEN FEET HORIZONTAL AWAY FROM ALL AIR CONDITIONING FRESH AIR INTAKES AND PROVIDED WITH VANDAL PROOF HOODS.
11. CONTRACTOR SHALL BE RESPONSIBLE FOR ALL CUTTING AND PATCHING OF WALLS, ROOFS, FOOTINGS, FLOORS, INCLUDING ALL SAW CUTTING AND CORE DRILLING. COORDINATE ALL SAW CUTTING AND CORE DRILLING WITH STRUCTURAL DRAWINGS. ANY CUTTING AND DRILLING REQUIRED OF STRUCTURAL ELEMENTS THAT IS NOT SPECIFICALLY SHOWN ON THE PLANS SHALL BE BROUGHT TO THE ARCHITECTS ATTENTION PRIOR TO CUTTING AND DRILLING. CONTRACTOR SHALL SUBMIT PROPOSED LOCATION AND SIZES OF SUCH CUTTING AND DRILLING FOR THE ARCHITECTS AND STRUCTURAL ENGINEERS APPROVAL.
12. COORDINATE ALL EQUIPMENT LOCATIONS, PIPE PENETRATIONS AND EQUIPMENT PAD LOCATIONS WITH STRUCTURAL DRAWINGS PRIOR TO WORK.
13. COORDINATE INSTALLATION OF ALL EQUIPMENT AND PIPING WITH OTHER TRADES PRIOR TO INSTALLATION. ENSURE THAT ALL CONTROL DEVICES, SHUT-OFF VALVES, ETC. ARE ACCESSIBLE FOR MAINTENANCE. WHERE ACCESS PANELS IN FINISHED SPACES, OTHER THAN THAT SHOWN, CONTRACTOR SHALL PROVIDE AND COORDINATE EXACT LOCATION OF PANELS WITH ARCHITECT PRIOR TO INSTALLATION.
14. ANY STRUCTURAL FIREPROOFING DAMAGED DURING INSTALLATION OF PLUMBING EQUIPMENT, PIPING, ETC. SHALL BE REPAIRED AT NO COST TO THE OWNER. REPAIRS SHALL BE AS DIRECTED BY THE ARCHITECT.
15. LAVATORY FAUCETS IN RESTROOMS SHALL BE THE SELF-CLOSING TYPE.
16. FAUCETS TO BE 2.2 G.P.M. MAXIMUM.
17. URINALS TO BE 1 G.P.M. MAXIMUM.
18. TOILETS TO BE ULTRA LOW FLUSH TYPE.
19. WATER HEATER IS TO BE USED ON CALIFORNIA ENERGY COMMISSION (CEC) LIST.
20. PROVIDE EXPANSION TANK OR OTHER APPROVED METHOD OF RELIEVING PRESSURE (SECTION 608.3 UPC)
21. CROSS CONNECTION PROTECTION SHALL BE PROVIDED AT ALL POTABLE WATER SUPPLIED APPLIANCES AND EQUIPMENT (OTHER THAN THOSE LISTED IN INFORMATION BULLETIN 103).

PLUMBING EQUIPMENT SCHEDULE

SYMBOL	TYPE	DESCRIPTION	LOCATION
CP 1	CIRCULATING PUMP HOT WATER	GRUNDFOS UPS 40-80/4, BRONZE VOLUTE, STAINLESS IMPELLER, WET ROTOR TYPE, 2" IN & OUT, 120 VOLTS, 1 PH, 1/2 HP.	MECHANICAL YARD
ET 1	EXPANSION TANK (DOMESTIC WATER SYSTEM)	FLEXCON WHV15 TOTAL VOLUME 20 GALLON TOTAL ACCEPTANCE VOLUME 8 GALLON	MECHANICAL YARD
WH 1	DOMESTIC WATER HEATER	LOCHINVAR OUTDOOR MODEL CWN0495PM, 500,000 BTUH INPUT, 85% EFFICIENT, 100°F RISE AT 486 GPH, VENT SIZE 4", ULTRA LO NOX BURNER, LESS THAN 20 PPM, W/ OPTIONAL PUMP 120 VOLT, 1 PH, PUMP COVER AND LOW WATER CUT-OFF, OPERATING WEIGHT 3500 LB.	MECHANICAL YARD
ST 1	DOMESTIC HOT WATER STORAGE TANK	LOCHINVAR TANK MODEL RGA318, 318 GALLON, OPERATING WEIGHT 3600 LB.	MECHANICAL YARD
GD 1	GARBAGE DISPOSAL	IN SINK ERATOR BADGER 5, 1/2 HORSEPOWER, FOOD WASTE DISPOSER, 115V, SINGLE PHASE, 60 Hz	BREAK ROOMS

PLUMBING FIXTURE SCHEDULE - HOLDING AREA

SYMBOL	FIXTURE	ROUGH-IN HW	CW	W	TRAP	V	REMARKS
SH 1	PENAL SHOWER	1/2"	1/2"	2"	1 1/2"	1 1/2"	W/ PRESSURE BALANCE VALVE
WC 3	WATER CLOSET/ LAVATORY/BUBBLER	1/2"	1"	4"	INT.	2"	PENAL WATER CLOSET/LAVATORY/BUBBLER COMBINATION
WC 4	WATER CLOSET/ LAVATORY/BUBBLER	1/2"	1"	4"	INT.	2"	PENAL WATER CLOSET/LAVATORY/BUBBLER COMBINATION, ACCESSIBLE

PLUMBING LEGEND AND ABBREVIATIONS

SYMBOL	ABBREV.	DESCRIPTION
	P.O.C.	POINT OF CONNECTION
	W	WASTE OR SEWER BELOW SLAB
	V	SANITARY VENT
	CW	COLD WATER
	HW	HOT WATER
	HWR	HOT WATER RETURN
—G—	G.	LOW PRESSURE NATURAL GAS
—MPG—	MPG	MEDIUM PRESSURE NATURAL GAS
—SD—	SD	STORM DRAIN
	G.V.	GATE VALVE
	B.V.	BALL VALVE
	P.R.V.	PRESSURE REDUCING VALVE
	RD	ROOF DRAIN
	F.D.	FLOOR DRAIN
	F.C.O.	FLOOR CLEAN-OUT
	WCO	WALL CLEAN-OUT
	G.C.O.	GRADE CLEAN-OUT
	DN.	DOWN OR DROP
	UP	RISE OR RISER
	H.B.	HOSE BIBB
		VALVE ON RISE OR DROP
	U.	UNION
	RV	TEMPERATURE & PRESSURE RELIEF VALVE
—CD—	CD	CONDENSATE DRAIN PIPING
	CP	CIRCULATING PUMP
	CV	CHECK VALVE
	TP	TRAP PRIMER
	WHA	WATER HAMMER ARRESTOR
	REG	GAS REGULATOR W/SHUT-OFF VALVE

SYMBOL	ABBREV.	DESCRIPTION
	ABV	ABOVE
	A.F.F.	ABOVE FINISH FLOOR
	A.F.G.	ABOVE FINISH GRADE
	A/G	ABOVE GRADE
	A.P.	ACCESS PANEL
	B/F	BELOW FLOOR
	B/G	BELOW GRADE
	BTUH	BRITISH THERMAL UNIT PER HOUR
	CFH	CUBIC FEET PER HOUR
	DWGS.	DRAWINGS
	EA.	EACH
	(E)	EXISTING
	FT.	FEET OR FOOT
	FPS	FEET PER SECOND
	FF	FINISHED FLOOR
	F.D.C.	FIRE DEPARTMENT CONNECTION
	FM	FIRE MARSHAL
	FL	FLOOR
	G.P.F.	GALLONS PER FLUSH
	GPH	GALLONS PER HOUR
	GPM	GALLONS PER MINUTE
	INT.	INTEGRATED
	I.E.	INVERT ELEVATION
	LB	POUND
	N/A	NOT APPLICABLE
	NTS	NOT TO SCALE
	OSD	OVERFLOW STORM DRAIN
	O.U.N.	UNLESS OTHERWISE NOTED
	PPM	PARTS PER MILLION
	PRV	PRESSURE REDUCING VALVE
	PSI	POUND PER SQUARE INCH
	SD	STORM DRAIN
	SF	SQUARE FEET
	T.D.H.	TOTAL DEVELOPED HEAD
	TDL	TOTAL DEVELOPED LENGTH
	V.T.R.	VENT THROUGH ROOF
	W.C.	WATER COLUMN
	WHA	WATER HAMMER ARRESTOR
	W/	WITH

PLUMBING FIXTURE SCHEDULE

SYMBOL	FIXTURE	ROUGH-IN HW	CW	W	TRAP	V	REMARKS
WC 1	WATER CLOSET	N/A	1"	4"	INT.	2"	FLOOR MOUNT, FLUSH VALVE
WC 2	WATER CLOSET	N/A	1"	4"	INT.	2"	FLOOR MOUNT, FLUSH VALVE ACCESSIBLE
UR 1	URINAL	N/A	3/4"	2"	INT.	1 1/2"	WALL MOUNT, FLUSH VALVE
UR 2	URINAL	N/A	3/4"	2"	INT.	1 1/2"	WALL MOUNT, FLUSH VALVE ACCESSIBLE
L 1	LAVATORY	1/2"	1/2"	2"	2"	1 1/2"	ACCESSIBLE, UNDERCOUNTER
L 2	LAVATORY	1/2"	1/2"	2"	2"	1 1/2"	WALL HUNG, ACCESSIBLE
S 1	SINK	1/2"	1/2"	2"	1 1/2"	1 1/2"	SELF RIMMING - DOUBLE COMPARTMENT WITH GARBAGE DISPOSAL, ACCESSIBLE
S 3	SINK	1/2"	1/2"	2"	1 1/2"	1 1/2"	SELF RIMMING - SINGLE COMPARTMENT, ACCESSIBLE
S 4	SINK	1/2"	1/2"	2"	1 1/2"	1 1/2"	SELF RIMMING - SINGLE COMPARTMENT, ACCESSIBLE
S 5	SINK	1/2"	1/2"	2"	1 1/2"	1 1/2"	SELF RIMMING - DOUBLE COMPARTMENT ACCESSIBLE
SH 2	SHOWER	1/2"	1/2"	2"	1 1/2"	1 1/2"	W/ PRESSURE BALANCE VALVE, ACCESSIBLE
SH 3	SHOWER	1/2"	1/2"	2"	1 1/2"	1 1/2"	W/ PRESSURE BALANCE VALVE
SH 4	GANG SHOWER	1/2"	1/2"	4"	4"	2"	(6) HEAD GANG SHOWER W/ PRESSURE BALANCE VALVE
HS 1	HAND SINK	1/2"	1/2"	2"	1 1/2"	1 1/2"	WALL HUNG
MS 1	JANITOR SINK	3/4"	3/4"	3"	3"	2"	FLOOR MOUNTED
EWC 1	ELECTRIC WATER COOLER	N/A	1/2"	2"	1 1/4"	1 1/2"	ACCESSIBLE
FD 1	FLOOR DRAIN	N/A	N/A	2"	2"	1 1/2"	BRONZE GRATE, TRAP PRIMER CONNECTION
RR 1	ROOF RECEPTOR	N/A	N/A	SEE PLANS	SEE PLANS	2"	WITH SOLID WATER DAM
HB 1	HOSE BIBB	3/4"	N/A	N/A	N/A	N/A	WITH VACUUM BREAKER (INTERIOR)
HB 2	HOSE BIBB	3/4"	N/A	N/A	N/A	N/A	WITH VACUUM BREAKER (EXTERIOR)
HB 3	HOSE BIBB	3/4"	N/A	N/A	N/A	N/A	LOCKABLE (EXTERIOR)
EEW 1	EMERGENCY EYE WASH/ SHOWER	N/A	1 1/4"	N/A	N/A	N/A	WITH TEMPERING VALVE
EEW 2	EMERGENCY EYE WASH	N/A	1"	N/A	N/A	N/A	WITH TEMPERING VALVE
ES 1	EMERGENCY SHOWER	N/A	1"	N/A	N/A	N/A	WITH TEMPERING VALVE
AD 2	AREA DRAIN	N/A	N/A	3"	N/A	N/A	
RD 1	ROOF DRAIN	N/A	N/A	4"	N/A	N/A	
ORD 1	OVERFLOW ROOF DRAIN	N/A	N/A	4"	N/A	N/A	
CWB 1	COLD WATER BOX	N/A	1/2"	N/A	N/A	N/A	PROVIDE FILTER

CARRIER JOHNSON

ARCHITECTURE
INTERIOR DESIGN
PLANNING

GORDON R. CARRIER AIA
MICHAEL C. JOHNSON AIA

WILLIAM C. BOCKEN AIA
DEBORAH P. ELLIOTT IIDA

2600 MICHELSON DRIVE
SUITE 400
IRVINE, CALIFORNIA
92612

TEL 949 955-2353
FAX 949 955-2377

1301 THIRD AVENUE
SAN DIEGO, CALIFORNIA
92101

TEL 619 239-2353
FAX 619 239-6227

GEM ENGINEERING, INC.
Consulting Mechanical Engineers
17065 Camino San Bernardo, Suite 200, San Diego, CA 92127
Phone: (858) 753-1000 Fax: (858) 753-1001

ONTARIO PD:: HEADQUARTERS

2534 S. ARCHIBALD AVE., ONTARIO, CALIFORNIA 91761

REVISIONS:
REVISED ASBUILT 04.30.2004

F9 FIELD ORDER 9 06.09.2003
5 Addendum 5 04.21.2003
3 Addendum 3
2 Addendum 2/Bldg. Dept. Re-Submittal 03.20.2003
Building Dept. Submittal 02.24.2003
ISSUES:

DIRECTORY/FILE NUMBER: 1346
1346P01.DWG
XREF'S DRAWINGS:

PROJECT NUMBER:
1346

DRAWN BY: CG
CHECKED BY: JC

DATE:
04-30-04

SCALE:
AS NOTED

TITLE:
PLUMBING GENERAL NOTES AND SCHEDULES

DRAWING NO:
P-0.1

ALL IDEAS, DESIGNS, ARRANGEMENTS, OR PLANS INDICATED OR REPRESENTED BY THIS DRAWING, ALL RIGHTS OF WHICH ARE RESERVED TO CARRIER JOHNSON, ARE NOT TO BE USED BY, OR DISCLOSED TO ANY PERSON, FIRM, OR CORPORATION FOR ANY PURPOSE WHATSOEVER WITHOUT THE WRITTEN PERMISSION OF CARRIER JOHNSON. FILING THESE DRAWINGS OR SPECIFICATIONS WITH ANY PUBLIC AGENCY IS NOT A PUBLICATION OF SAME. NO COPYING, REPRODUCTION OR USE THEREOF IS PERMISSIBLE WITHOUT THE CONSENT OF CARRIER JOHNSON.

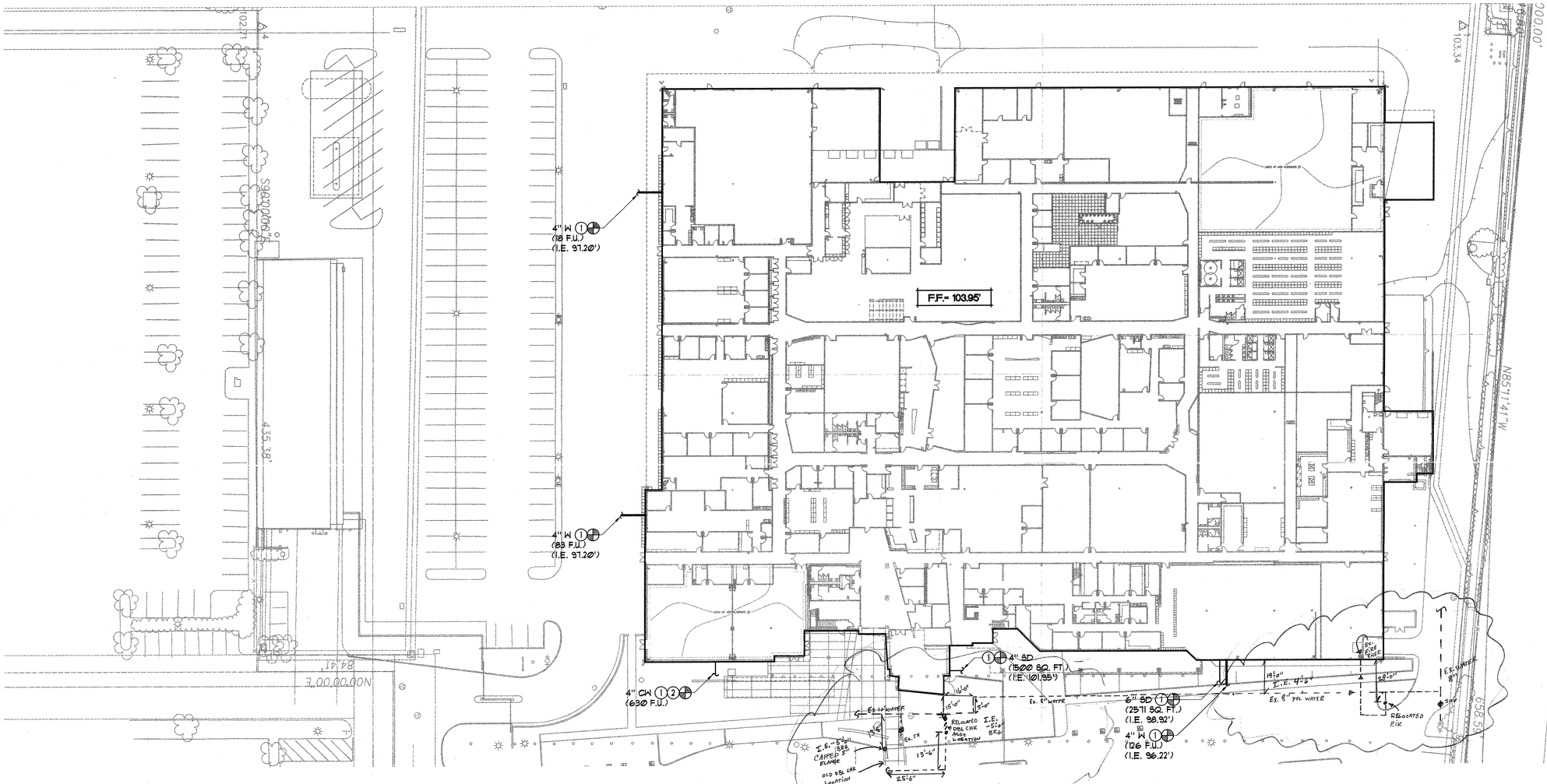

PLUMBING SITE PLAN

1" = 30'-0"

1 / P1.1

KEYED NOTES:

1. P.O.C. SEE CIVIL DRAWINGS FOR CONTINUATION.
2. SEE CIVIL DRAWINGS FOR CONNECTION TO WATER METER.

GAS LOAD SUMMARY (MEDIUM PRESS.)

ITEM		MBH
DOMESTIC WATER BOILER	=	500
FUTURE MECHANICAL BOILER	=	4000
FUTURE MECHANICAL BOILER	=	4000
TOTAL	=	8500

PIPE SIZING CHART BASED ON 500 FT
TOTAL DEVELOPED LENGTH FROM REGULATOR TO MOST REMOTE OUTLET.

GAS PIPING DIAGRAM

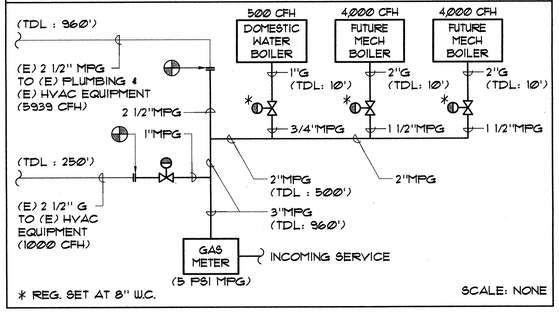

* REG. SET AT 8" W.C.

SCALE: NONE

COLD WATER PRESSURE LOSS CALCULATION

PRESSURE AVAILABLE

STATIC PRESSURE AT INLET TO SITE:	75-86	PSI
ESTIMATED PRESSURE LOSS THRU METER:	10	PSI
ESTIMATED PRESSURE LOSS THRU BACKFLOW DEVICE:	8	PSI
ESTIMATED PRESSURE LOSS THRU PRV:	5	PSI
STATIC PRESSURE AT PRV OUTLET:	52	PSI
MINIMUM PRESSURE REQUIRED AT LAST FIXTURE:	25	PSI
STATIC HEAD LOSS (20 FT x .434):	9	PSI
TOTAL AVAILABLE FOR FRICTION LOSS	18	PSI
TOTAL DEVELOPED LENGTH (TDL) :	1200	FEET

(18 x 100)/1200 = 1.5 PSI ALLOWABLE LOSS/ 100 FT

PIPE SIZING CHART BASED ON 1.5 PSI/ 100FT LOSS

COLD WATER PIPE SIZING CHART

SIZE	GPM	FIXTURE UNITS		VELOCITY (FPS)
		FLUSH TANK	FLUSH VALVE	
1/2"	1.3	N/A	N/A	1.7
3/4"	3.2	3	N/A	2.1
1"	6.7	7	N/A	2.6
1 1/4"	13	18	N/A	3.0
1 1/2"	19	28	N/A	3.3
2"	39	83	26	4.0
2 1/2"	70	225	108	4.8
3"	130	533	430	5.6
4"	230	1173	1173	6.8

HOT WATER PIPE SIZING CHART

SIZE	GPM	FIXTURE UNITS	VELOCITY (FPS)
		FLUSH TANK	
1/2"	1.3	N/A	1.7
3/4"	3.2	3	2.1
1"	6.7	7	2.6
1 1/4"	13	18	3.0
1 1/2"	19	28	3.3
2"	39	83	4.0
2 1/2"	70	225	4.8
3"	110	431	5.0
4"	180	809	5.0

HOT WATER PRESSURE LOSS CALCULATION

PRESSURE AVAILABLE

STATIC PRESSURE AT STORAGE TANK:	25	PSI
MINIMUM PRESSURE REQUIRED AT LAST FIXTURE:	8	PSI
STATIC HEAD LOSS (0 FT x .434):	0	PSI
TOTAL AVAILABLE FOR FRICTION LOSS	17	PSI
TOTAL DEVELOPED LENGTH (TDL) :	1100	FEET

(17 x 100)/1100 = 1.5 PSI ALLOWABLE LOSS/ 100 FT

PIPE SIZING CHART BASED ON 1.5 PSI/ 100FT LOSS

RECORD DRAWING
DEEL MECHANICAL CORPORATION
JOB #:
BY:
DATE: 2/24/04

CARRIER JOHNSON
ARCHITECTURE
INTERIOR DESIGN
PLANNING
GORDON R. CARRIER AIA
MICHAEL C. JOHNSON AIA
WILLIAM C. BOCKEN AIA
DEBORAH F. ELLIOTT IIDA
2600 MICHELSON DRIVE
SUITE 400
IRVINE, CALIFORNIA
92612
TEL 949 955-2353
FAX 949 955-2377
1301 THIRD AVENUE
SAN DIEGO, CALIFORNIA
92101
TEL 619 239-2353
FAX 619 239-4227
GEM ENGINEERING, INC.
Consulting Mechanical Engineers
11965 Canon Blvd Newport, Suite 205, San Diego, CA 92127
Phone: 858 753-5000 Fax: 858 753-5001

ONTARIO PD:: HEADQUARTERS

2534 S. ARCHIBALD AVE., ONTARIO, CALIFORNIA 91761

REGISTERED PROFESSIONAL ENGINEER
FRANK SHADFAR
No. 23923
MECHANICAL
EXP. 9-30-05
STATE OF CALIFORNIA

5	Addendum 5 04.21.2003
3	Addendum 3
2	Addendum 2/Bldg. Dept. Re-Submittal 03.20.2003
	Building Dept. Submittal 02.24.2003

ISSUES:
DIRECTORY/FILE NUMBER: 1346
1346P11.DWG
XREF'S DRAWINGS:
PROJECT NUMBER: 1346
DRAWN BY: CQ
CHECKED BY: JC
DATE: 03-19-03
SCALE: AS NOTED
TITLE: PLUMBING SITE PLAN
DRAWING NO: P-1.1

ALL IDEAS, DESIGN, ARRANGEMENTS AND PLANS INDICATED OR REPRESENTED BY THIS DRAWING ARE OWNED BY, AND THE PROPERTY OF CARRIER JOHNSON AND WERE CREATED, EVOLVED AND DEVELOPED FOR USE ON, AND IN CONNECTION WITH THIS PROJECT. NONE OF SUCH IDEAS, DESIGN, ARRANGEMENTS OR PLANS SHALL BE USED BY OR DISCLOSED TO ANY PERSON, FIRM OR CORPORATION FOR ANY PURPOSE WHATSOEVER, EXCEPT WITH THE PRIOR WRITTEN AGREEMENT OF CARRIER JOHNSON. FILING THESE DRAWINGS OR SPECIFICATIONS WITH ANY PUBLIC AGENCY IS NOT A PUBLICATION OF SAME. NO COPYING, REPRODUCTION, OR USE THEREOF IS PERMISSIBLE WITHOUT THE CONSENT OF CARRIER JOHNSON.

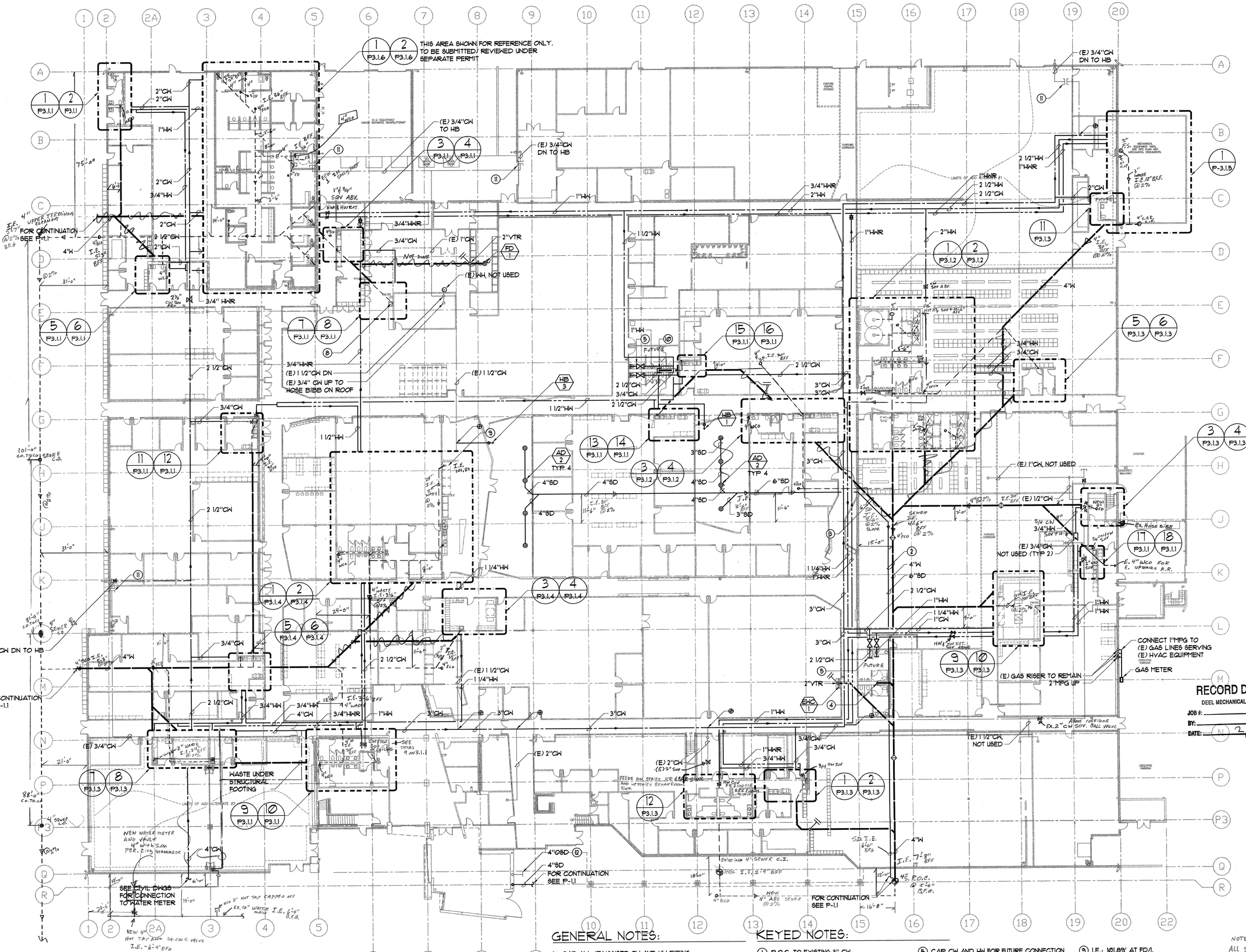
THIS AREA SHOWN FOR REFERENCE ONLY. TO BE SUBMITTED/ REVIEWED UNDER SEPARATE PERMIT
(E) 3/4"CW DN TO HB
(E) 3/4"CW TO HB
(E) 3/4"CW DN TO HB
(E) 1"CW, NOT USED
(E) 3/4"CW NOT USED (TYP 2)
(E) 1 1/2"CW, NOT USED
(E) 2"CW
(E) 1 1/2"CW DN
(E) 3/4" CW UP TO HOSE BIBB ON ROOF
(E) 1 1/2"CW
(E) 1 1/4"HW
(E) 3/4"CW DN TO HB
(E) GAS RISER TO REMAIN 2"MPG UP
FOR CONTINUATION SEE P-1.1
FOR CONTINUATION SEE P-1.1
FOR CONTINUATION SEE P-1.1
WASTE UNDER STRUCTURAL FOOTING
NEW WATER METER AND VAULT 4" WITH 3/4" PER DWG STANDARDS
SEE CIVIL DWGS FOR CONNECTION TO WATER METER
NEW 4" HOT TAP INTO 30" CI. CK VALVE I.E. -6'-4" BFG
EX. 10" WATER MAIN
old 3" HOT TAP CAPPED OFF
EXISTING 4" SEWER C.I.
NEW 4" ABS SEWER @ 2%
4" SEWER C.O.
4" SEWER C.O.
4" SEWER C.O.

ALL IDEAS, DESIGN, ARRANGEMENTS AND PLANS INDICATED OR REPRESENTED BY THIS DRAWING ARE OWNED BY, AND THE PROPERTY OF CARRIER JOHNSON AND WERE CREATED, EVOLVED AND DEVELOPED FOR USE ON, AND IN CONNECTION WITH, THIS PROJECT. NEITHER THIS DRAWING, OR ANY PART HEREOF, NOR ANY OF SUCH IDEAS, DESIGN, ARRANGEMENTS, OR PLANS SHALL BE USED BY, OR DISCLOSED TO ANY PERSON, FIRM OR CORPORATION FOR ANY PURPOSE WHATSOEVER WITHOUT THE WRITTEN PERMISSION OF CARRIER JOHNSON. FILING THESE DRAWINGS OR SPECIFICATIONS WITH ANY PUBLIC AGENCY IS NOT A PUBLICATION OF SAME. NO COPYING, REPRODUCTION OR USE THEREOF IS PERMISSIBLE WITHOUT THE CONSENT OF CARRIER JOHNSON.

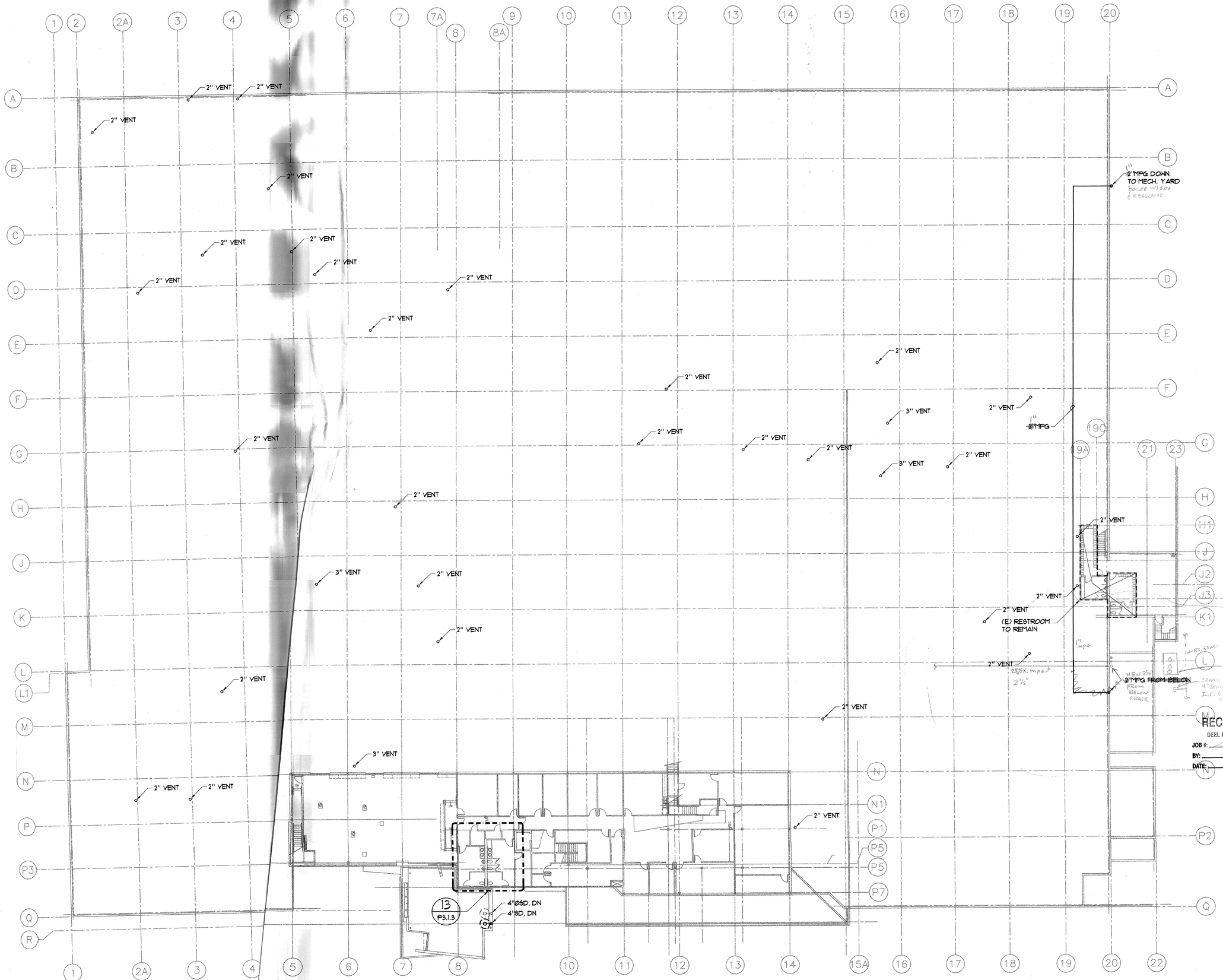
2" VENT
3" VENT
2"MPG DOWN TO MECH. YARD
BOILER W/SOV & PRESSURE
2"MPG
2" VENT
(E) RESTROOM TO REMAIN
2" VENT
2"MPG
2" VENT
2"MPG FROM BELOW
NEW 2½" FROM BELOW GRADE
CAP IT 4" SOVIA I.E. 5.4" STUB
EX. DEAD GREASE INTERCEPTOR
EX. 8"SAN
EX. 2½" MPG
2½"
1" MPG
2" VENT
3" VENT
2" VENT
2" VENT
2" VENT
2" VENT
2" VENT
2" VENT
2" VENT
2" VENT
2" VENT
2" VENT
2" VENT
2" VENT
2" VENT
2" VENT
2" VENT
2" VENT
3" VENT
2" VENT
3" VENT
2" VENT
2" VENT
2" VENT
2" VENT
2" VENT
2" VENT
2" VENT
2" VENT
2" VENT
2" VENT
2" VENT
2" VENT
2" VENT
2" VENT
2" VENT
2

ALL IDEAS, DESIGN, ARRANGEMENTS AND PLANS INDICATED OR REPRESENTED BY THIS DRAWING ARE OWNED BY, AND THE PROPERTY OF CARRIER JOHNSON, AND WERE CREATED, EVOLVED AND DEVELOPED FOR USE ON, AND IN CONNECTION WITH THIS PROJECT. NONE OF SUCH IDEAS, DESIGN, ARRANGEMENTS, OR PLANS SHALL BE USED BY, OR DISCLOSED TO ANY PERSON, FIRM, OR CORPORATION FOR ANY PURPOSE WHATSOEVER WITHOUT THE WRITTEN PERMISSION OF CARRIER JOHNSON. FILING THESE DRAWINGS OR SPECIFICATIONS WITH ANY PUBLIC AGENCY IS NOT A PUBLICATION OF SAME. NO COPYING, REPRODUCTION OR USE THEREOF IS PERMISSIBLE WITHOUT THE CONSENT OF CARRIER JOHNSON.

GENERAL NOTE

1. PROVIDE CONDENSATE DRAIN FOR NEW HVAC EQUIPMENT PER CPC. ROUTE TO APPROVED RECEPTOR.
2. GAS PIPING BELOW ROOF (U.O.N.).

KEYED NOTES:

1. EXISTING FLOOR SINK, VERIFY EXACT LOCATION. COORDINATE WITH MECHANICAL.
2. SUPPORT PRESSURIZED COLD WATER LINE WITH UNISTRUT SECURELY FASTENED TO ROOF STRUCTURE. SEAL ALL ROOF PENETRATIONS (WEATHER/ WATER TIGHT).
3. GAS PRESSURE REGULATOR. COORDINATE WITH MECHANICAL.
4. PROVIDE REDUCED-PRESSURE-PRINCIPLE BACKFLOW PREVENTER: ASSE 1013, SUITABLE FOR CONTINUOUS PRESSURE APPLICATION. INCLUDE OUTSIDE SCREW AND YOKE GATE VALVES ON INLET AND OUTLET, AND STRAINER ON INLET; TEST COCKS; AND PRESSURE-DIFFERENTIAL RELIEF VALVE WITH ASME A112.1.2 AIR-GAP FITTING LOCATED BETWEEN TWO POSITIVE-SEATING CHECK VALVES. PRESSURE LOSS: 12 PSIG MAXIMUM, THROUGH MIDDLE 1/3 OF FLOW RANGE.

P3

2" VTR
2" VTR
2" VTR
(E) 3/4" MPG
MPG
(E) 3/4" MPG
2" VTR
2" VTR
2" VTR
2" VTR
2" VTR
2" VENT
P3
MPG
(E) 1/2" MPG
AC-9
(E) FLOOR SINK (1)
DOWN TO WASTE LINE IN ROOM 3202
CD
1"
UP
UP
2" VTR
(E) 3/4" MPG
2" VTR
(E) 1/2" MPG
MPG
(E) AC UNIT
(E) AC UNIT
(E) CAP GAS LINE
2" VTR
CW UP FROM ROOM 3202 UPSTREAM OF SHUT-OFF VALVE
2" VTR
2" VTR
3" VTR
3" VTR
2" VTR
1" MPG DOWN TO PLUMBING EQUIPMENT SEE SHEET P3.1.5
2" VTR
1" MPG
(E) 1/2" MPG
4"W BELOW ROOF
DEMO GAS LINE
1" CW BELOW ROOF
RR
1 1/2" DRAIN LINE FROM BOILER
1" CW MAKE-UP LINE (4) TO EXPANSION TANK
2" VTR
3/4" DRAIN LINE FROM CHEMICAL POT FEEDER
(2) TRAP PRIMER LOCATED ON ROOF
(3) COORDINATE EXACT LOCATION OF RISE WITH MECHANICAL
2" VTR
UP
(E) AC UNIT
2" VTR
3" VTR
2" VTR
MPG
(E) 1 1/4" MPG
1 1/2" MPG
(E) 1 1/2" MPG
MPG
CW UP FROM ROOM 2805
1/2" CW
TRAP PRIMER (2) LOCATED ON ROOF
2" VTR
2" VTR
UP
(E) AC UNIT
CAP BOTH ENDS OF (E) GAS LINE
2" VTR
CAP BOTH ENDS OF (E) GAS LINE
2"/IN DOWN TO ROOM 2805
RR
EF-17
EF-18
2" VTR
(E) 2" MPG
MPG
(E) 2 1/2" MPG
(E) 2 1/2" G
G
MPG
RUN FULL SIZE DRAIN LINE TO ROOF RECEPTOR
EF-19
(E) MPG TO REMAIN
2" VTR
UP
(E) AC UNIT
(E) 1" MPG
(E) AC UNIT
2" VTR
AC-10
AC-9
AC-8
1"
1 1/4"
1"
1"
1/2" MPG
(E) 1/2" MPG
(E) AC UNIT
UP
MPG
(E) 1/2" MPG
3" VTR
(1) (E) FLOOR SINK
(3) COORDINATE EXACT LOCATION OF RISE WITH MECHANICAL
DOWN TO (E) WATER HEATER
2" VTR
2" VTR
2" VTR
RR
RR

1 2 2A 3 4 5 6 7 7A 8 8A 9 10 11 12 13 14 15 15A 16 17 18 19 19A 20 21 22 23
A B C D E F G H H1 J J2 J3 K K1 L L1 M N N1 P P1 P2 P3 P5 P5 P7 Q R

PLUMBING PLAN - OVERALL ROOF

1/16" = 1'-0"

1 / P2.4.0

N

2/24/04

ARCHITECTURE
INTERIOR DESIGN
PLANNING

CARRIER JOHNSON

GORDON R. CARRIER AIA
MICHAEL C. JOHNSON AIA
WILLIAM C. BOCKEN AIA
DEBORAH P. ELLIOTT IIDA

2600 MICHELSON DRIVE SUITE 400 IRVINE, CALIFORNIA 92612
TEL 949 955-2353 FAX 949 955-2377

1301 THIRD AVENUE SAN DIEGO, CALIFORNIA 92101
TEL 619 239-2353 FAX 619 239-8227

CEM ENGINEERING INC.
Consulting Mechanical Engineers
1706 Cotner, San Clemente, Suite 205, San Diego, CA 92627
Phone (949) 443-0400 • Fax (949) 443-0402

ONTARIO PD:: HEADQUARTERS

2534 S. ARCHIBALD AVE., ONTARIO, CALIFORNIA 91761

REGISTERED PROFESSIONAL ENGINEER
FRANK SHADROUR
No. 23923
MECHANICAL
EXP. 9-30-05
STATE OF CALIFORNIA

P9 FIELD ORDER 9 06.09.2003
5 Addendum 5 04.21.2003
3 Addendum 3
2 Addendum 2/Bldg. Dept. Re-Submittal 03.20.2003
Building Dept. Submittal 02.24.2003

ISSUES:
DIRECTORY/FILE NUMBER: 1346
1346P240.DWG
XREF'S DRAWINGS:

PROJECT NUMBER: 1346
DRAWN BY: CG
CHECKED BY: JC
DATE: 03-19-03
SCALE: 1/16" = 1' - 0"
TITLE: PLUMBING PLAN—OVERALL ROOF

DRAWING NO: P-2.4.0

ALL IDEAS, DESIGN, ARRANGEMENTS AND PLANS INDICATED OR REPRESENTED BY THIS DRAWING ARE OWNED BY, AND THE PROPERTY OF CARRIER JOHNSON AND WERE CREATED, EVOLVED AND DEVELOPED FOR USE ON, AND IN CONNECTION WITH THE SPECIFIED PROJECT. NONE OF SUCH IDEAS, DESIGNS, ARRANGEMENTS OR PLANS SHALL BE USED BY OR DISCLOSED TO ANY PERSON, FIRM OR CORPORATION FOR ANY PURPOSE WHATSOEVER WITHOUT THE WRITTEN CONSENT OF CARRIER JOHNSON. PUBLICATION OF SAME, NO COPYING, REPRODUCTION OR USE THEREOF IS PERMISSIBLE WITHOUT THE CONSENT OF CARRIER JOHNSON. BY ACCEPTING AND/OR USING THESE DRAWINGS OR SPECIFICATIONS WITH ANY PUBLIC AGENCY IS NOT A PUBLICATION OF SAME.

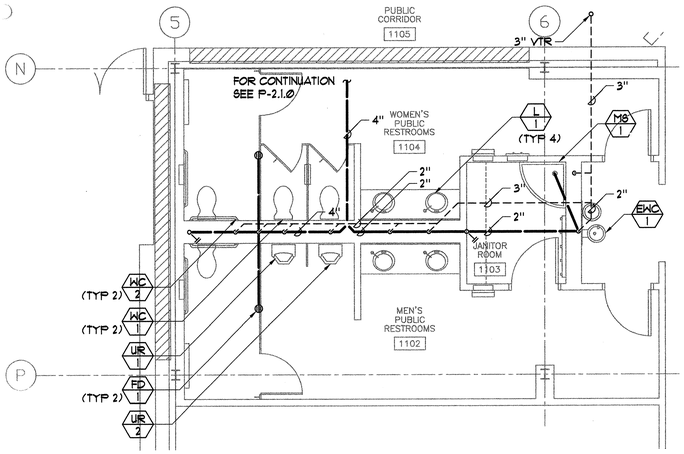

PUBLIC RESTROOMS
WASTE & VENT
1/4" = 1'-Ø" — 10 / P3.1.1 — N

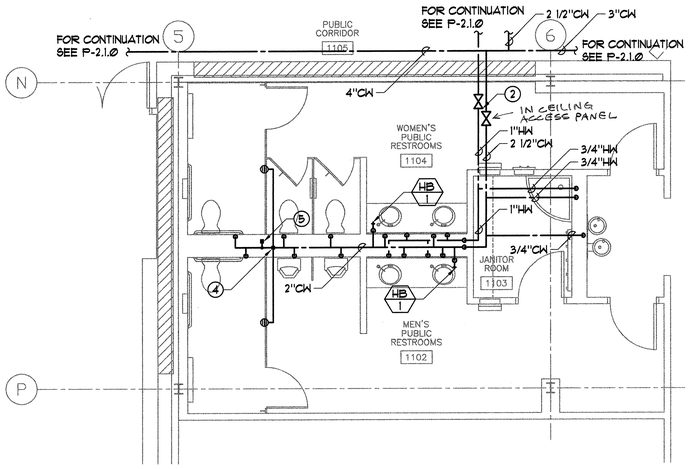

PUBLIC RESTROOMS
DOMESTIC WATER
1/4" = 1'-Ø" — 9 / P3.1.1 — N

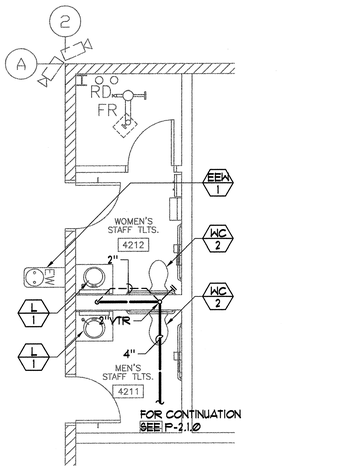

STAFF TOILETS
WASTE & VENT
1/4" = 1'-Ø" — 2 / P3.1.1 — N

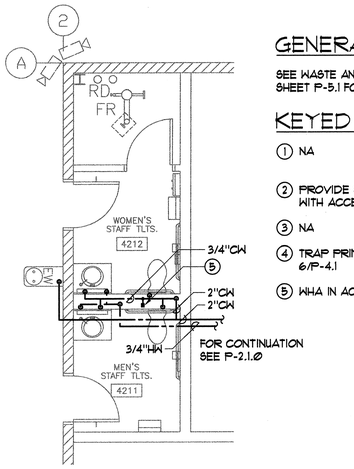

STAFF TOILETS
DOMESTIC WATER
1/4" = 1'-Ø" — 1 / P3.1.1 — N

GENERAL NOTE

SEE WASTE AND VENT RISER DIAGRAMS ON SHEET P-5.1 FOR W & V PIPE SIZES.

KEYED NOTES:

1. NA
2. PROVIDE SHUT-OFF VALVE FOR CW AND HW WITH ACCESS PANEL.
3. NA
4. TRAP PRIMER IN ACCESS PANEL, SEE DETAIL 6/P-4.1
5. WHA IN ACCESS PANEL, SEE DETAIL 2/P-4.1

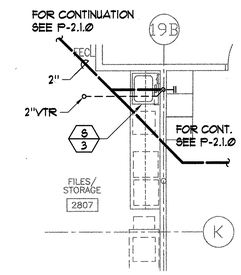

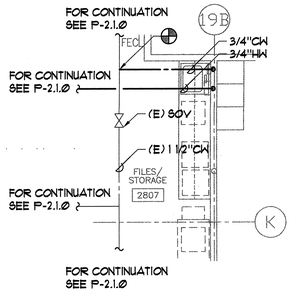

FILES/ STORAGE
WASTE & VENT
1/4" = 1'-Ø" — 18 / P3.1.1 — N

FILES/ STORAGE
DOMESTIC WATER
1/4" = 1'-Ø" — 17 / P3.1.1 — N

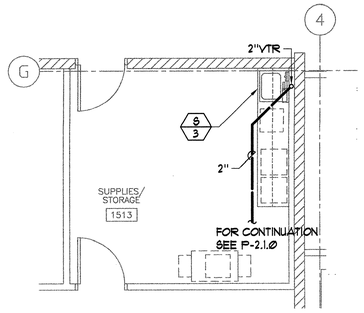

SUPPLIES/ STORAGE
WASTE & VENT
1/4" = 1'-Ø" — 12 / P3.1.1 — N

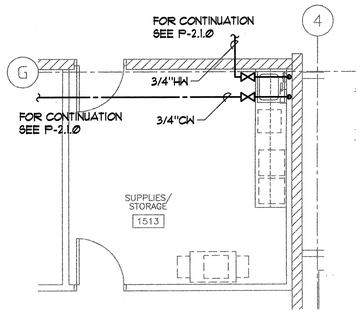

SUPPLIES/ STORAGE
DOMESTIC WATER
1/4" = 1'-Ø" — 11 / P3.1.1 — N

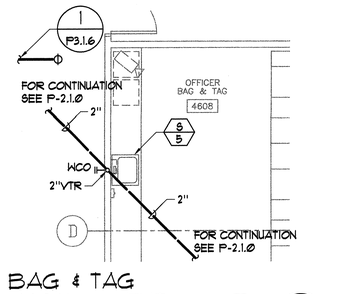

BAG & TAG
WASTE & VENT
1/4" = 1'-Ø" — 4 / P3.1.1 — N

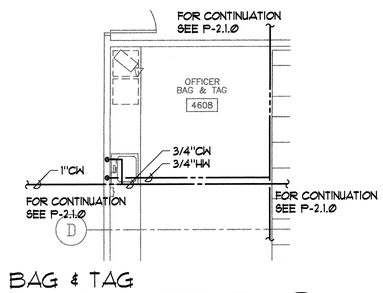

BAG & TAG
DOMESTIC WATER
1/4" = 1'-Ø" — 3 / P3.1.1 — N

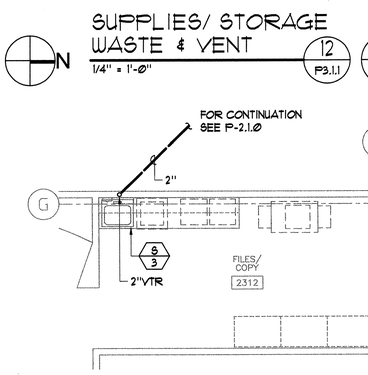

WAITING
WASTE & VENT
1/4" = 1'-Ø" — 16 / P3.1.1 — N

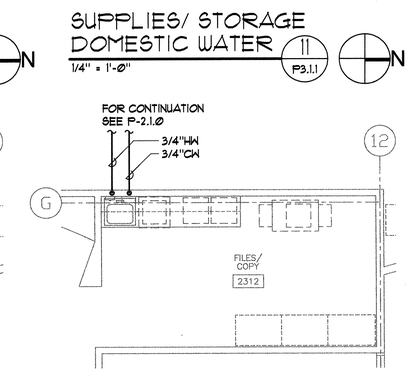

WAITING
DOMESTIC WATER
1/4" = 1'-Ø" — 15 / P3.1.1 — N

FILES/ COPY
WASTE & VENT
1/4" = 1'-Ø" — 14 / P3.1.1 — N

FILES/ COPY
DOMESTIC WATER
1/4" = 1'-Ø" — 13 / P3.1.1 — N

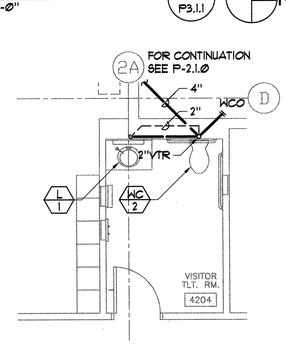

VISITOR TOILET
WASTE & VENT
1/4" = 1'-Ø" — 6 / P3.1.1 — N

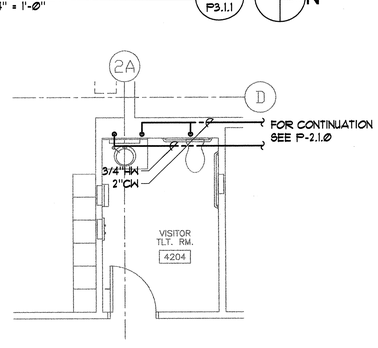

VISITOR TOILET
DOMESTIC WATER
1/4" = 1'-Ø" — 5 / P3.1.1 — N

EEW
WASTE & VENT
1/4" = 1'-Ø" — 8 / P3.1.1 — N

EEW
DOMESTIC WATER
1/4" = 1'-Ø" — 7 / P3.1.1 — N

CARRIER JOHNSON
ARCHITECTURE
INTERIOR DESIGN
PLANNING

GORDON B. CARRIER AIA
MICHAEL C. JOHNSON AIA

WILLIAM C. BOCKEN AIA
DEBORAH P. ELLIOTT IIDA

2600 MICHELSON DRIVE
SUITE 400
IRVINE, CALIFORNIA
92612

TEL 949 955-2353
FAX 949 955-2377

1301 THIRD AVENUE
SAN DIEGO, CALIFORNIA
92101

TEL 619 239-2353
FAX 619 239-4227

GEM ENGINEERING INC.
Consulting Mechanical Engineers
1950 Cotner Ave., Suite 210, San Diego, CA 92122
Phone: (858) 793-1000 Fax: (858) 793-1001

ONTARIO PD:: HEADQUARTERS

2534 S. ARCHIBALD AVE., ONTARIO, CALIFORNIA 91761

REVISIONS:
REVISED ASBUILT 04.30.2004

FO 9 FIELD ORDER 9 06.09.2003
5 Addendum 5 04.21.2003
3 Addendum 3
2 Addendum 2/Bldg. Dept. Re-Submittal 03.20.2003
Building Dept. Submittal 02.24.2003

ISSUE:
DIRECTORY/FILE NUMBER: 1346
1346P311.DWG
XREFS DRAWINGS:

PROJECT NUMBER:
1346
DRAWN BY: CQ
CHECKED BY: JC
DATE:
04-30-04
SCALE:
1/4" = 1' - 0"

TITLE:
PLUMBING PARTIALS

DRAWING NO:
P-3.1.1

ALL IDEAS, DESIGN, ARRANGEMENTS AND PLANS INDICATED OR REPRESENTED BY THIS DRAWING ARE OWNED BY, AND THE PROPERTY OF CARRIER JOHNSON AND WERE CREATED, EVOLVED AND DEVELOPED FOR USE ON, AND IN CONNECTION WITH THIS PROJECT. NONE OF SUCH IDEAS, DESIGN, ARRANGEMENTS OR PLANS SHALL BE USED BY OR DISCLOSED TO ANY PERSON, FIRM OR CORPORATION FOR ANY PURPOSE WHATSOEVER WITHOUT THE WRITTEN PERMISSION OF CARRIER JOHNSON. FILING THESE DRAWINGS OR SPECIFICATIONS WITH ANY PUBLIC AGENCY IS NOT A PUBLICATION OF SAME. NO COPYING, REPRODUCTION OR USE THEREOF IS PERMISSIBLE WITHOUT THE CONSENT OF CARRIER JOHNSON.

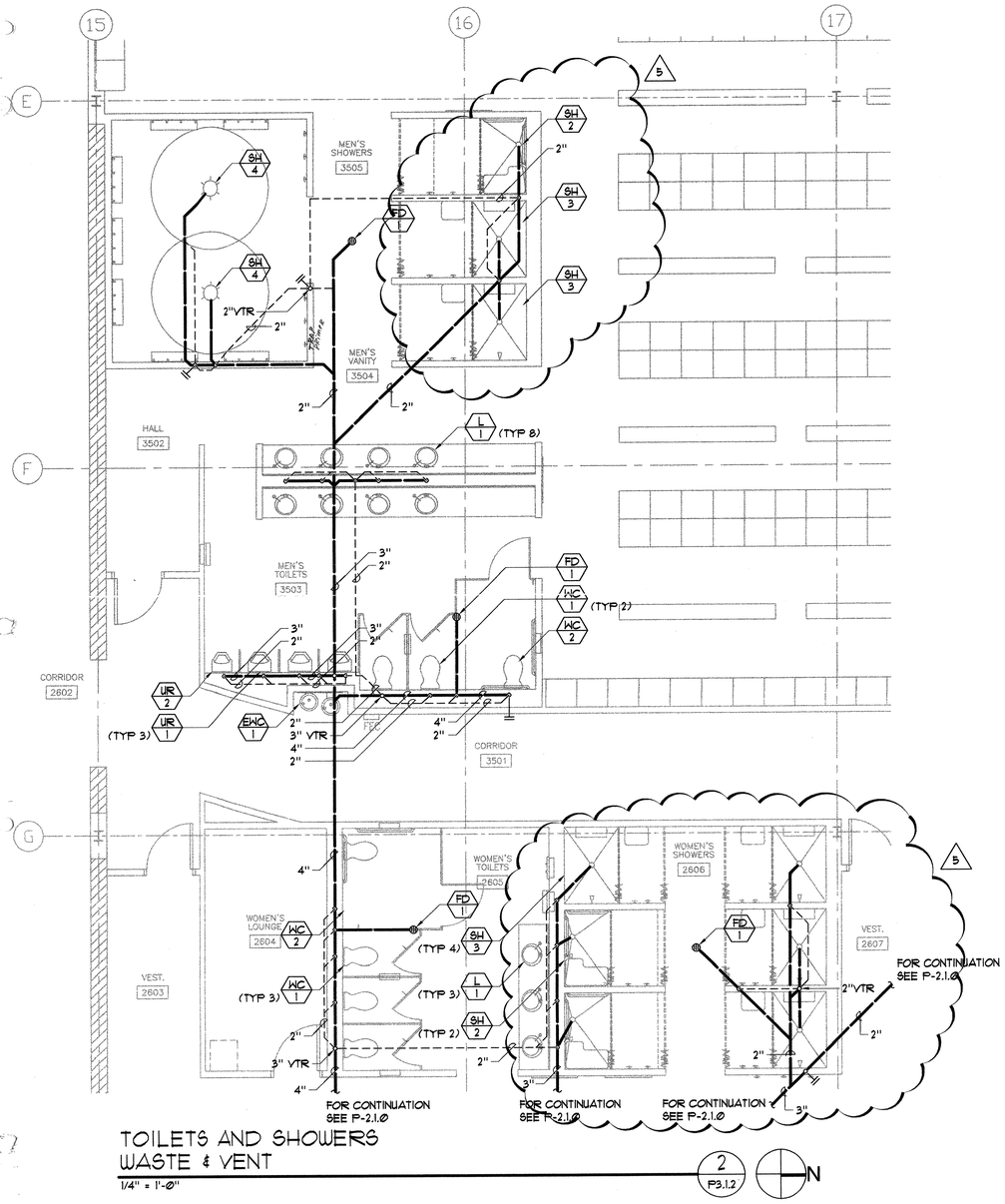

TOILETS AND SHOWERS WASTE & VENT

1/4" = 1'-Ø"

2 P3.1.2

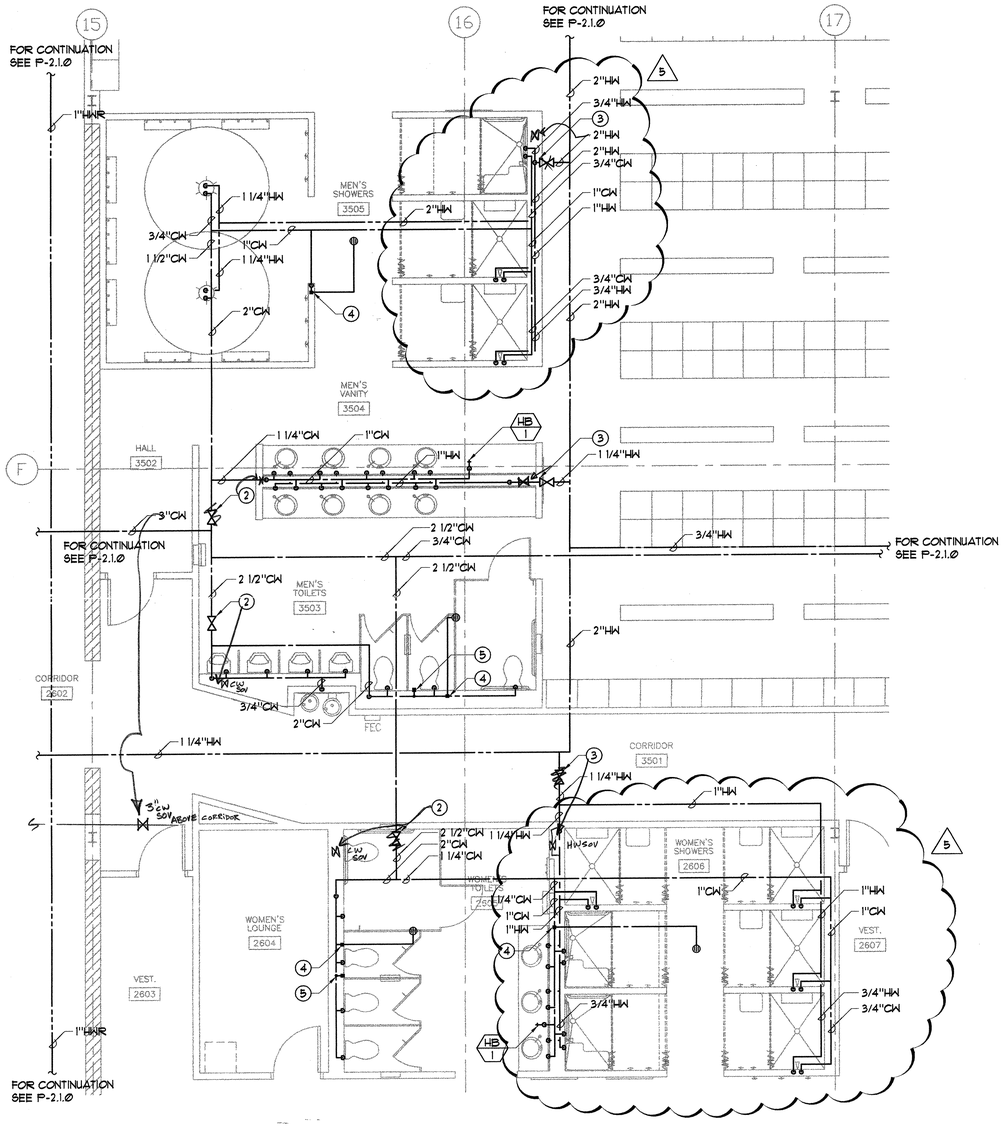

TOILETS AND SHOWERS DOMESTIC WATER

1/4" = 1'-Ø"

1 P3.1.2

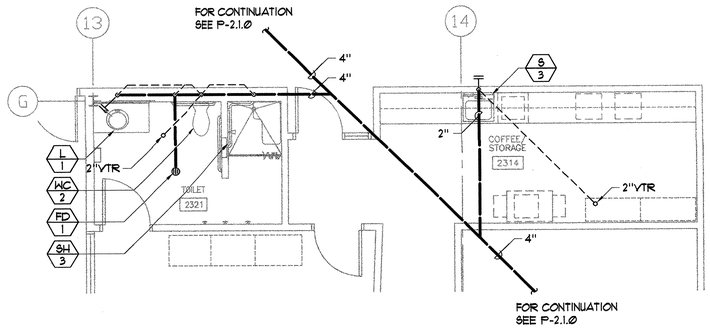

TOILET AND COFFEE/STORAGE ROOM WASTE & VENT

1/4" = 1'-Ø"

4 P3.1.2

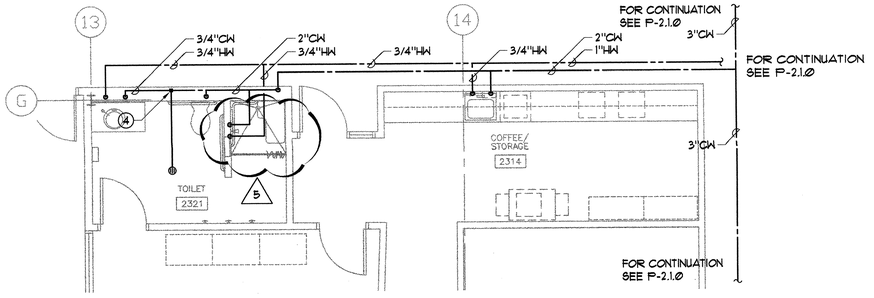

TOILET AND COFFEE/STORAGE ROOM DOMESTIC WATER

1/4" = 1'-Ø"

3 P3.1.2

GENERAL NOTE

SEE WASTE AND VENT RISER DIAGRAMS ON SHEET P-5.1 FOR W & V PIPE SIZES.

KEYED NOTES:

1. NA
2. PROVIDE SHUT-OFF VALVE FOR CW WITH ACCESS PANEL.
3. PROVIDE SHUT-OFF VALVE FOR HW WITH ACCESS PANEL.
4. TRAP PRIMER IN ACCESS PANEL, SEE DETAIL 6/P-4.1
5. WHA IN ACCESS PANEL, SEE DETAIL 2/P-4.1

RECORD DRAWING
DEEL MECHANICAL CORPORATION
JOB #:
BY:
DATE: 2/24/04

CARRIER JOHNSON
ARCHITECTURE
INTERIOR DESIGN
PLANNING
GORDON R. CARRIER AIA
MICHAEL C. JOHNSON AIA
WILLIAM C. BOCKEN AIA
DEBORAH F. ELLIOTT IIDA
2600 MICHELSON DRIVE SUITE 400 IRVINE, CALIFORNIA 92612
TEL 949 955-2353 FAX 949 955-2377
1301 THIRD AVENUE SAN DIEGO, CALIFORNIA 92101
TEL 619 239-2353 FAX 619 239-4227
GEM ENGINEERING, INC.
Consulting Mechanical Engineers
11545 Caminito Del Rosario, Suite 100, San Diego, CA 92127
Phone: (858) 792-7900 Fax (858) 792-7901

ONTARIO PD:: HEADQUARTERS

2534 S. ARCHIBALD AVE., ONTARIO, CALIFORNIA 91761

REGISTERED PROFESSIONAL ENGINEER FRANK SHADRUN No. 23923 MECHANICAL EXP. 9-30-05 STATE OF CALIFORNIA

5	Addendum 5 04.21.2003
3	Addendum 3
2	Addendum 2/Bldg. Dept. Re-Submittal 03.20.2003
	Building Dept. Submittal 02.24.2003

ISSUES:
DIRECTORY/FILE NUMBER: 1346
1346P312.DWG
XREF'S DRAWINGS:
PROJECT NUMBER: 1346
DRAWN BY: CG
CHECKED BY: JC
DATE: 03-19-03
SCALE: 1/4" = 1' - 0"
TITLE: PLUMBING PARTIALS

DRAWING NO: P-3.1.2

ALL IDEAS, DESIGN ARRANGEMENTS AND PLANS INDICATED OR REPRESENTED BY THIS DRAWING ARE OWNED BY AND THE PROPERTY OF CARRIER JOHNSON AND WERE CREATED, EVOLVED AND DEVELOPED FOR USE ON AND IN CONNECTION WITH THE SPECIFIED PROJECT. NONE OF SUCH IDEAS, DESIGN ARRANGEMENTS OR PLANS SHALL BE USED BY OR DISCLOSED TO ANY PERSON, FIRM OR CORPORATION FOR ANY PURPOSE WHATSOEVER WITHOUT THE WRITTEN PERMISSION OF CARRIER JOHNSON. FILING THESE DRAWINGS OR SPECIFICATIONS WITH ANY PUBLIC AGENCY IS NOT A PUBLICATION OF SAME. NO COPYING, REPRODUCTION OR USE THEREOF IS PERMISSIBLE WITHOUT THE CONSENT OF CARRIER JOHNSON.

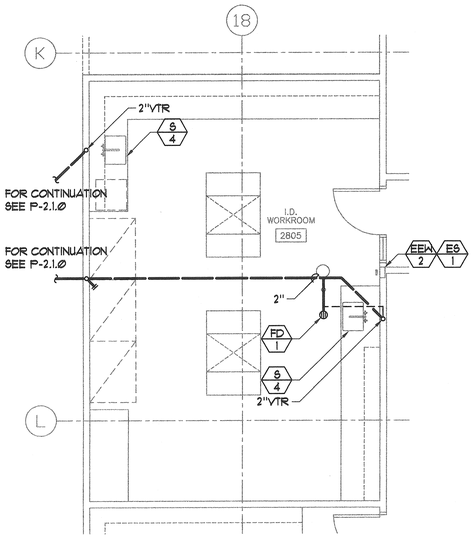

I.D. WORKROOM
WASTE & VENT
1/4" = 1'-Ø" — 10 / P3.1.3

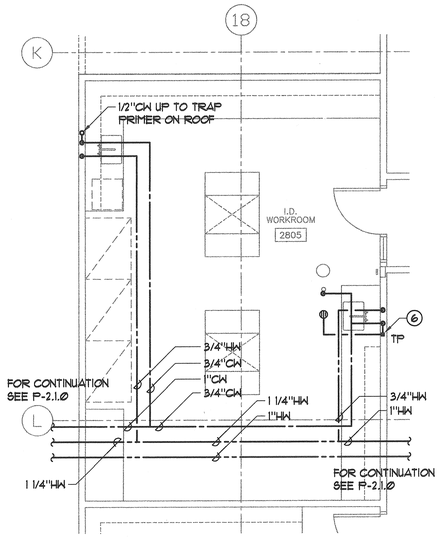

I.D. WORKROOM
DOMESTIC WATER
1/4" = 1'-Ø" — 9 / P3.1.3

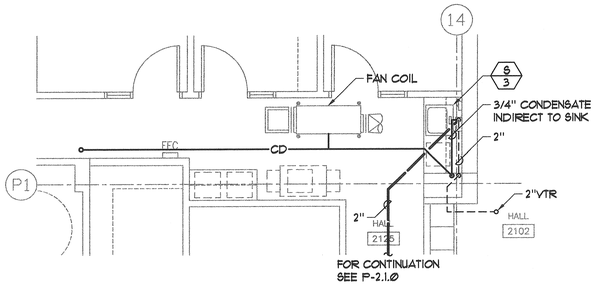

HALLWAY SINK
WASTE & VENT
1/4" = 1'-Ø" — 2 / P3.1.3

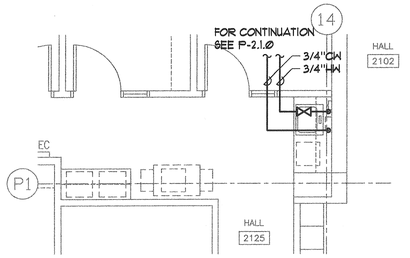

HALLWAY SINK
DOMESTIC WATER
1/4" = 1'-Ø" — 1 / P3.1.3

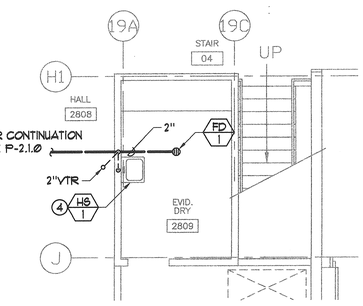

EVID. DRY
WASTE & VENT
1/4" = 1'-Ø" — 4 / P3.1.3

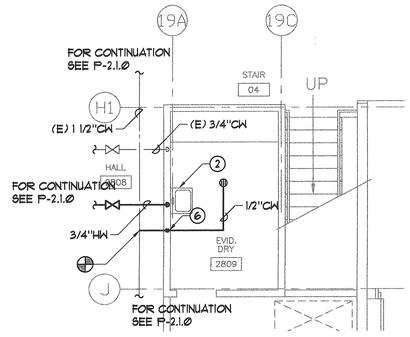

EVID. DRY
DOMESTIC WATER
1/4" = 1'-Ø" — 3 / P3.1.3

(E) UNISEX TOILET
DOMESTIC WATER
1/4" = 1'-Ø" — 11 / P3.1.3

(E) TOILETS
DOMESTIC WATER
1/4" = 1'-Ø" — 12 / P3.1.3

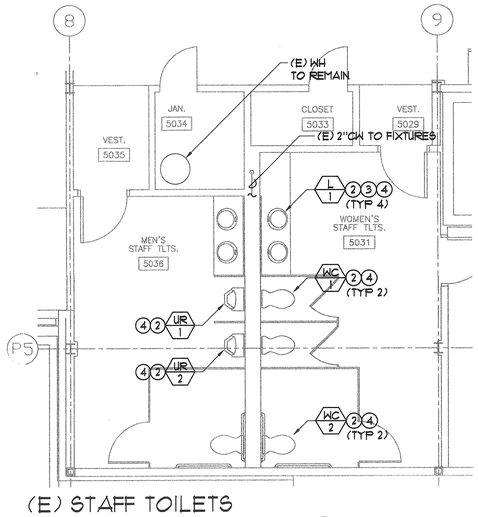

(E) STAFF TOILETS
DOMESTIC WATER
1/4" = 1'-Ø" — 13 / P3.1.3

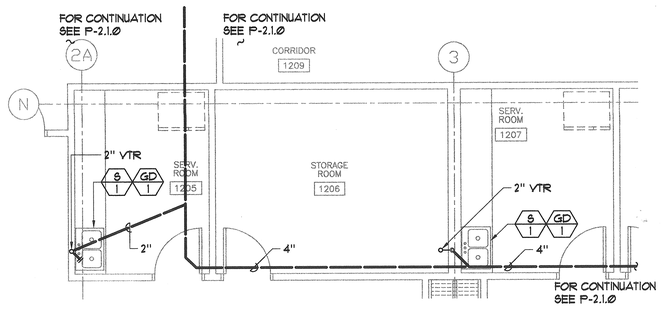

JANITOR ROOM
WASTE & VENT
1/4" = 1'-Ø" — 6 / P3.1.3

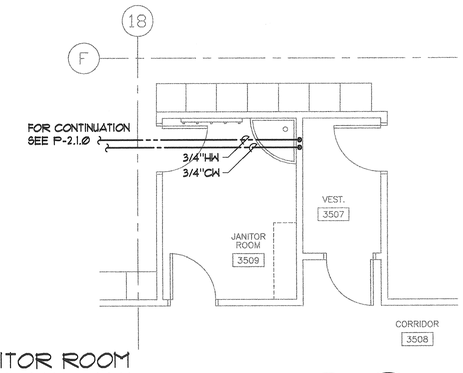

JANITOR ROOM
DOMESTIC WATER
1/4" = 1'-Ø" — 5 / P3.1.3

SERVICE ROOM
WASTE & VENT
1/4" = 1'-Ø" — 8 / P3.1.3

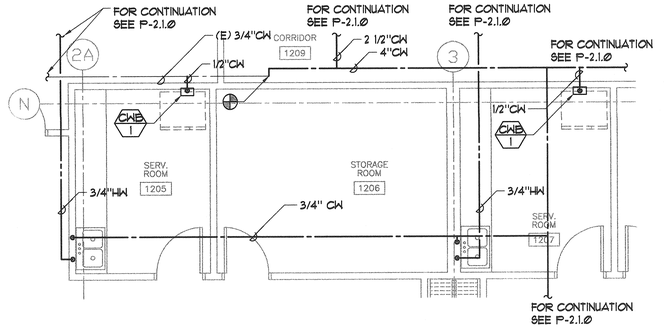

SERVICE ROOM
DOMESTIC WATER
1/4" = 1'-Ø" — 7 / P3.1.3

GENERAL NOTE

SEE WASTE AND VENT RISER DIAGRAMS ON SHEET P-5.1 FOR W & V PIPE SIZES.

KEYED NOTES:

1. CONNECT 1"HW TO (E) HW MAIN SERVING RESTROOM. VERIFY SIZE OF (E) HW MAIN PRIOR TO COMMENCEMENT OF WORK.
2. CONNECT FIXTURE TO (E) CW LINE.
3. CONNECT FIXTURE TO (E) HW LINE.
4. CONNECT FIXTURE TO (E) W LINE.
5. NA
6. TRAP PRIMER IN ACCESS PANEL, SEE DETAIL 6/P-4.1.
7. DEMO EXISTING URINAL AND PATCH HOLE TO MATCH EXISTING.
8. CAP WASTE LINE IN WALL AND CONCRETE FILL LEVEL WITH FLOOR.
9. CAP EXISTING WASTE LINE FROM DEMO'D LAV AND PATCH HOLE TO MATCH EXISTING.
10. CAP EXISTING CW AND HW TO DEMO'D LAV IN WALL AND PATCH HOLE TO MATCH EXISTING.

CARRIER JOHNSON
ARCHITECTURE
INTERIOR DESIGN
PLANNING
GORDON B. CARRIER AIA
MICHAEL C. JOHNSON AIA
WILLIAM C. BOCKEN AIA
DEBORAH P. ELLIOTT IIDA
2600 MICHELSON DRIVE
SUITE 400
IRVINE, CALIFORNIA
92612
TEL 949 955-2353
FAX 949 955-2377
1301 THIRD AVENUE
SAN DIEGO, CALIFORNIA
92101
TEL 619 239-2353
FAX 619 239-4227
GEM ENGINEERING, INC.
Consulting Mechanical Engineers
1700 Quince Ave., Suite 200, San Diego, CA 92102
Phone: (619) 702-1000 Fax: (619) 702-1001

ONTARIO PD:: HEADQUARTERS

2534 S. ARCHIBALD AVE., ONTARIO, CALIFORNIA 91761

REVISIONS:
REVISED ASBUILT 04.30.2004

FO 9 FIELD ORDER 9 08.09.2003
5 Addendum 5 04.21.2003
3 Addendum 3
2 Addendum 2/Bldg. Dept. Re-Submittal 03.20.2003
Building Dept. Submittal 02.24.2003

ISSUES:
DIRECTORY/FILE NUMBER: 1346
1346P313.DWG
XREF'S DRAWINGS:

PROJECT NUMBER: 1346
DRAWN BY: CG
CHECKED BY: JC
DATE: 04-30-04
SCALE: 1/4" = 1' - 0"
TITLE: PLUMBING PARTIALS

DRAWING NO: P-3.1.3

ALL IDEAS, DESIGN ARRANGEMENTS AND PLANS INDICATED OR REPRESENTED BY THIS DRAWING ARE OWNED BY AND THE PROPERTY OF CARRIER JOHNSON AND CULTURE + ARCHITECTURE, AND WERE CREATED, EVOLVED AND DEVELOPED FOR USE ON AND IN CONNECTION WITH THE SPECIFIED PROJECT AND ARE NOT TO BE USED, IN WHOLE OR IN PART, FOR ANY OTHER PROJECT, WITHOUT THE WRITTEN AUTHORIZATION OF CARRIER JOHNSON. FILING THESE DRAWINGS OR SPECIFICATIONS WITH ANY PUBLIC AGENCY IS NOT A PUBLICATION OF SAME. NO COPYING, REPRODUCTION OR USE THEREOF IS PERMISSIBLE WITHOUT THE CONSENT OF CARRIER JOHNSON.

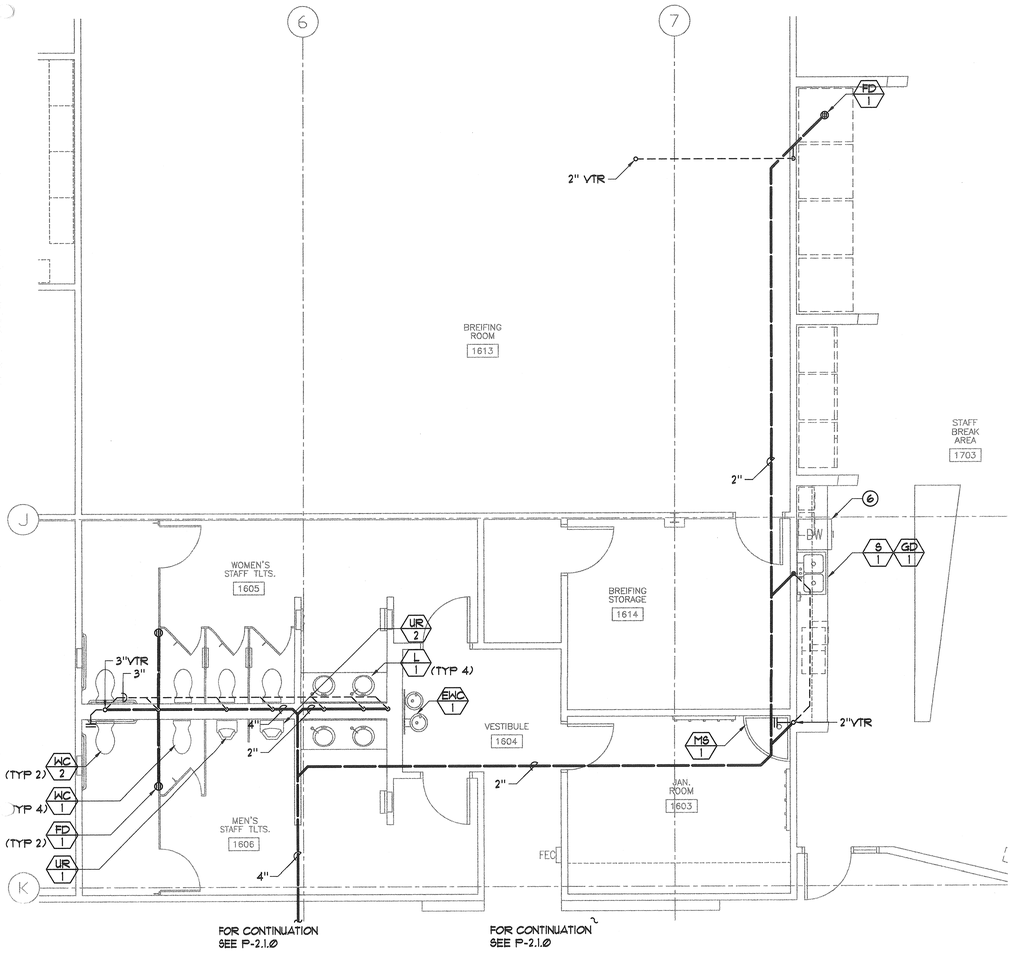

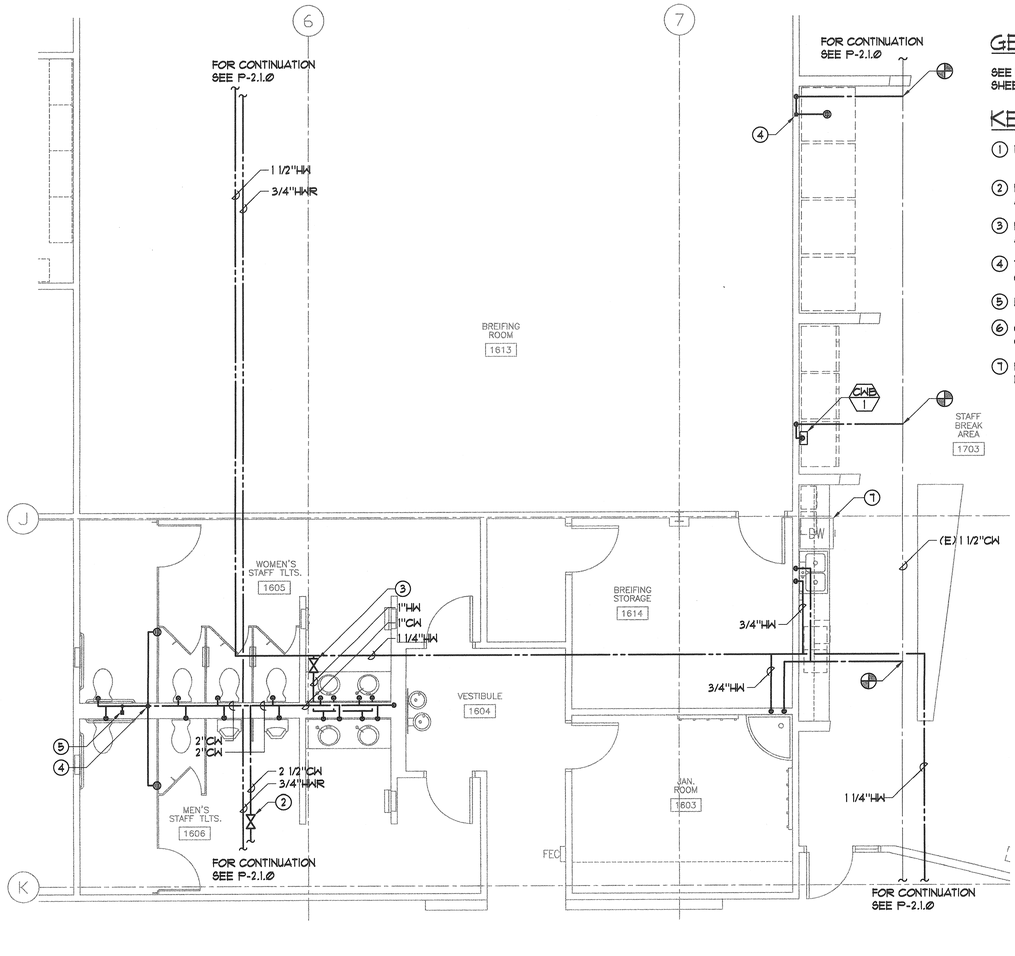

GENERAL NOTE

SEE WASTE AND VENT RISER DIAGRAMS ON SHEET P-5.1 FOR W & V PIPE SIZES.

KEYED NOTES:

1. NA
2. PROVIDE SHUT-OFF VALVE FOR CW WITH ACCESS PANEL.
3. PROVIDE SHUT-OFF VALVE FOR HW WITH ACCESS PANEL.
4. TRAP PRIMER IN ACCESS PANEL, SEE DETAIL 6/P-4.1
5. WHA IN ACCESS PANEL, SEE DETAIL 2/P-4.1
6. CONNECT DISHWASHER WASTE LINE TO GARBAGE DISPOSAL AT S/2
7. PROVIDE HW LINE FROM S-2 TO SERVE DISHWASHER

JANITOR ROOM WASTE & VENT

1/4" = 1'-Ø" — 2 / P3.1.4

JANITOR ROOM DOMESTIC WATER

1/4" = 1'-Ø" — 1 / P3.1.4

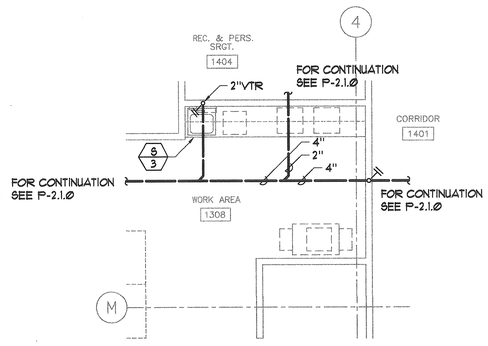

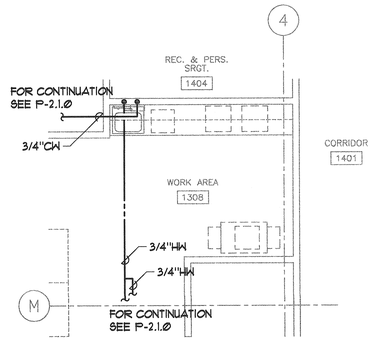

WORK AREA WASTE & VENT

1/4" = 1'-Ø" — 6 / P3.1.4

WORK AREA DOMESTIC WATER

1/4" = 1'-Ø" — 5 / P3.1.4

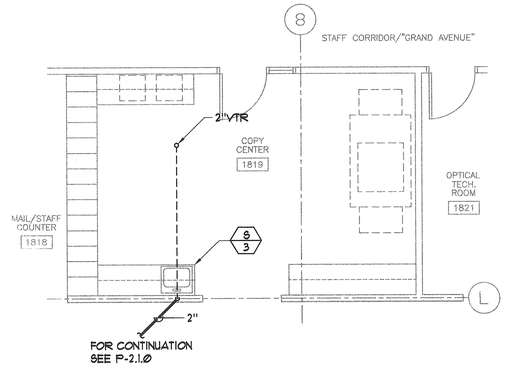

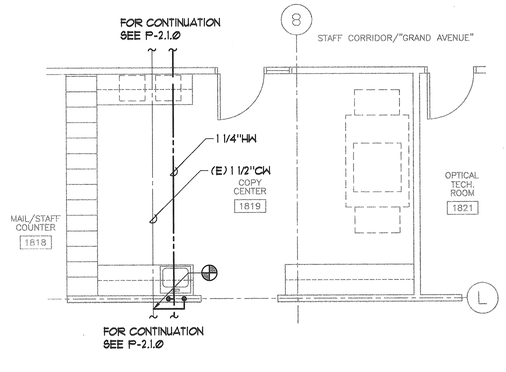

COPY CENTER WASTE & VENT

1/4" = 1'-Ø" — 4 / P3.1.4

COPY CENTER DOMESTIC WATER

1/4" = 1'-Ø" — 3 / P3.1.4

ARCHITECTURE
INTERIOR DESIGN
PLANNING

CARRIER JOHNSON

GORDON R. CARRIER AIA
MICHAEL C. JOHNSON AIA

WILLIAM C. BOCKEN AIA
DEBORAH P. ELLIOTT IIDA

2600 MICHELSON DRIVE
SUITE 400
IRVINE, CALIFORNIA
92612

TEL 949 955-2353
FAX 949 955-2377

1201 THIRD AVENUE
SAN DIEGO, CALIFORNIA
92101

TEL 619 239-2353
FAX 619 239-2227

GEM ENGINEERING INC
Consulting Mechanical Engineers
1756 Second Avenue, San Diego, CA 92101
Phone: (619) 702-1000 Fax: (619) 702-1001

ONTARIO PD:: HEADQUARTERS

2534 S. ARCHIBALD AVE., ONTARIO, CALIFORNIA 91761

REVISIONS:
REVISED ASBUILT 04.30.2004

FO 9 FIELD ORDER 9 06.09.2003
5 Addendum 5 04.21.2003
3 Addendum 3
2 Addendum 2/Bldg. Dept. Re-Submittal 03.20.2003
Building Dept. Submittal 02.24.2003

ISSUES:

DIRECTORY/FILE NUMBER: 1346
1346P314.DWG
XREF'S DRAWINGS:

PROJECT NUMBER:
1346

DRAWN BY: CG
CHECKED BY: JC

DATE:
04-30-04

SCALE:
1/4" = 1' - 0"

TITLE:
PLUMBING PARTIALS

DRAWING NO:
P-3.1.4

ALL IDEAS, DESIGNS, ARRANGEMENTS, OR PLANS INDICATED OR REPRESENTED BY THIS DRAWING, ALL OF WHICH CONSTITUTE THE ORIGINAL AND UNPUBLISHED WORK OF CARRIER JOHNSON, AND THE SPECIAL PROJECT, NONE OF SUCH IDEAS, DESIGN, ARRANGEMENTS, OR PLANS SHALL BE USED BY, OR DISCLOSED TO ANY PERSON, FIRM, OR CORPORATION FOR ANY PURPOSE WHATSOEVER WITHOUT THE WRITTEN PERMISSION OF CARRIER JOHNSON. FILING THESE DRAWINGS OR SPECIFICATIONS WITH ANY PUBLIC AGENCY IS NOT A PUBLICATION OF SAME. NO COPYING, REPRODUCTION OR USE THEREOF IS PERMISSIBLE WITHOUT THE CONSENT OF CARRIER JOHNSON.

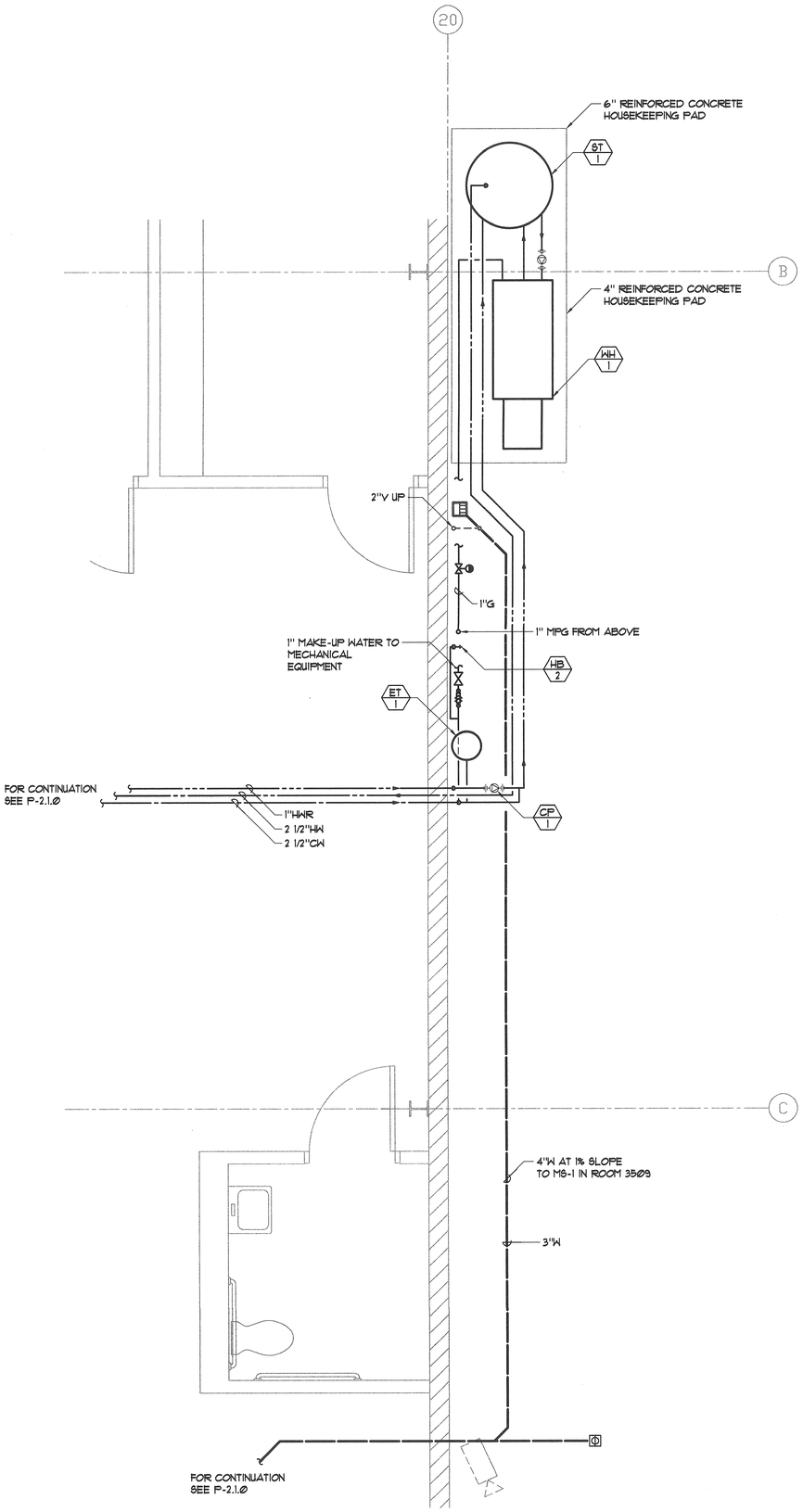

MECHANICAL EQUIPMENT ROOM

1/2" = 1'-0"

1 / P3.1.4

N

GENERAL NOTE

SEE WASTE AND VENT RISER DIAGRAMS ON SHEET P-5.1 FOR W & V PIPE SIZES.

CARRIER JOHNSON

ARCHITECTURE
INTERIOR DESIGN
PLANNING

GORDON N. CARRIER AIA
MICHAEL C. JOHNSON AIA

WILLIAM C. BOCKEN AIA
DEBORAH P. ELLIOTT IIDA

2600 MICHELSON DRIVE
SUITE 400
IRVINE, CALIFORNIA
92612

TEL 949 955-2353
FAX 949 955-2377

1301 THIRD AVENUE
SAN DIEGO, CALIFORNIA
92101

TEL 619 239-2353
FAX 619 239-0227

GEM ENGINEERING Inc.
Consulting Mechanical Engineers
1706 Oakes, Ste Bonsack, Suite 206, San Diego, CA 92107
Phone: (619) 574-0620 Fax: (619) 574-0624
Kevin Mott, Mike Mueller, Fernando Montes

ONTARIO PD:: HEADQUARTERS

2534 S. ARCHIBALD AVE., ONTARIO, CALIFORNIA 91761

REVISIONS:
REVISED ASBUILT 04.30.2004

FO 9 FIELD ORDER 9 06.09.2003
5 Addendum 5 04.21.2003
3 Addendum 3
2 Addendum 2/Bldg. Dept. Re-Submittal 03.20.2003
Building Dept. Submittal 02.24.2003

ISSUES:
DIRECTORY/FILE NUMBER: 1346
1346P315
XREF'S DRAWINGS:

PROJECT NUMBER:
1346

DRAWN BY: CG
CHECKED BY: JC

DATE:
04-30-04

SCALE:
1/2" = 1' - 0"

TITLE:
MECHANICAL EQUIPMENT YARD

DRAWING NO:
P-3.1.5

WITH THIS PROJECT. NONE OF SUCH IDEAS, DESIGN, ARRANGEMENTS, OR PLANS SHALL BE USED BY, OR DISCLOSED TO ANY PERSON, FIRM, OR CORPORATION FOR ANY PURPOSE WHATSOEVER WITHOUT THE WRITTEN PERMISSION OF CARRIER JOHNSON. FILING THESE DRAWINGS OR SPECIFICATIONS WITH ANY PUBLIC AGENCY IS NOT A PUBLICATION OF SAME. NO COPYING, REPRODUCTION OR USE THEREOF IS PERMISSIBLE WITHOUT THE CONSENT OF CARRIER JOHNSON.

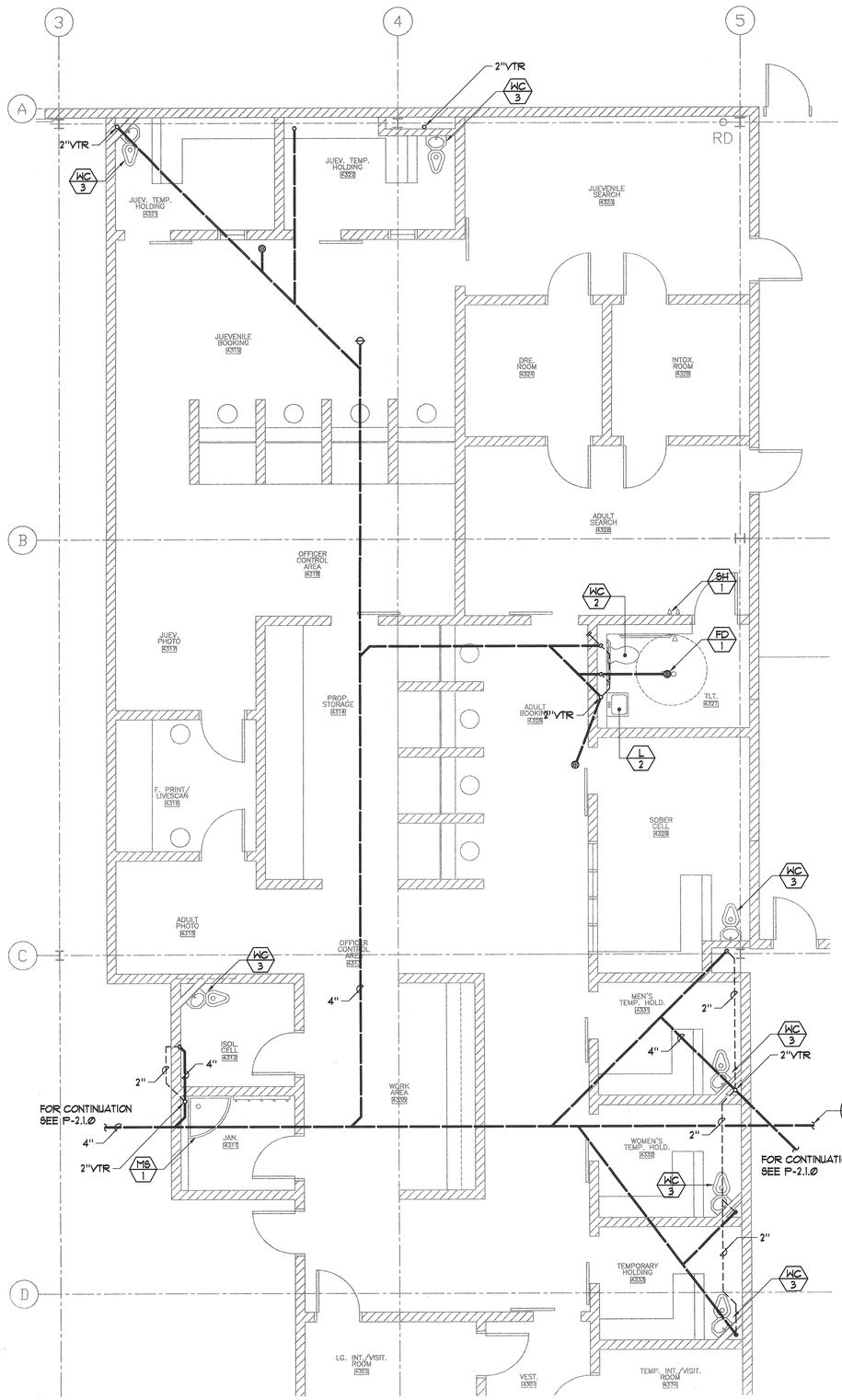

HOLDING TLTS.
WASTE & VENT
1/4" = 1'-0"
1 P3.1.6
N

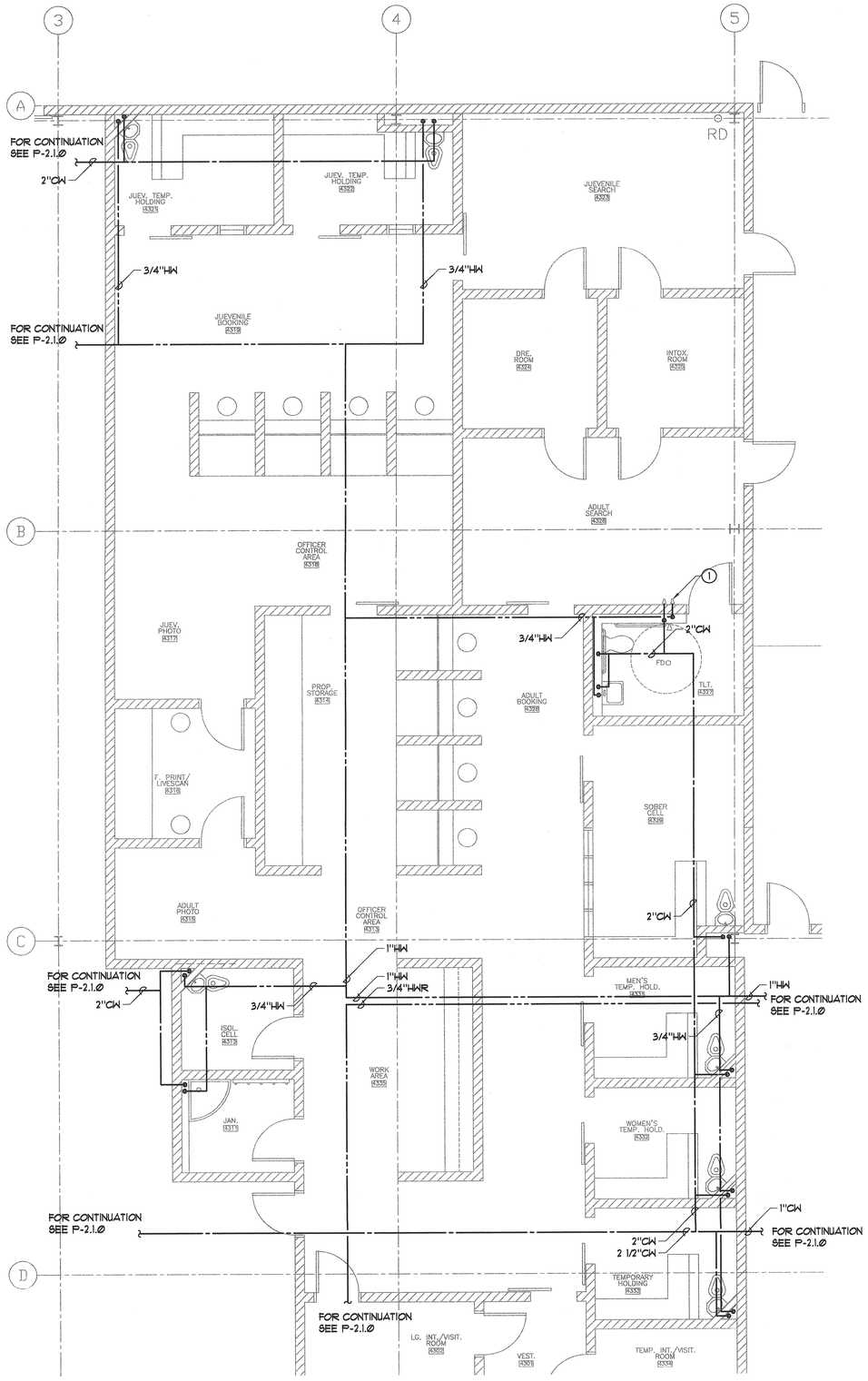

HOLDING TLTS.
DOMESTIC WATER
1/4" = 1'-0"
2 P3.1.6
N

KEYED NOTES:

1. SH-1 HANDLES LOCATED ON EXTERIOR OF TOILET 4321

CARRIER JOHNSON

ARCHITECTURE
INTERIOR DESIGN
PLANNING

GORDON R. CARRIER AIA
MICHAEL C. JOHNSON AIA

WILLIAM C. BOCKEN AIA
DEBORAH P. ELLIOTT IIDA

2600 MICHELSON DRIVE
SUITE 400
IRVINE, CALIFORNIA
92612

TEL 949 955-2353
FAX 949 955-2377

1301 THIRD AVENUE
SAN DIEGO, CALIFORNIA
92101

TEL 619 239-2353
FAX 619 239-6227

GEM ENGINEERING, INC.
Consulting Mechanical Engineers
10165 Camino San Bernardo, Suite 200, San Diego, CA 92127
Phone: (858) 753-5000 Fax: (858) 753-5001

ONTARIO PD:: HEADQUARTERS

2534 S. ARCHIBALD AVE., ONTARIO, CALIFORNIA 91761

REVISIONS:
REVISED ASBUILT 04.30.2004

P9	FIELD ORDER 9 06.09.2003
5	Addendum 5 04.21.2003
3	Addendum 3
2	Addendum 2/Bldg. Dept. Re-Submittal 03.20.2003
	Building Dept. Submittal 02.24.2003

ISSUES:
DIRECTORY/FILE NUMBER: 1346
1346P316.DWG
XREF'S DRAWINGS:

PROJECT NUMBER:
1346

DRAWN BY: CG
CHECKED BY: JC

DATE:
04-30-04

SCALE:
1/4" - 1' - 0"

TITLE:
PLUMBING PARTIALS

DRAWING NO:
P-3.1.6

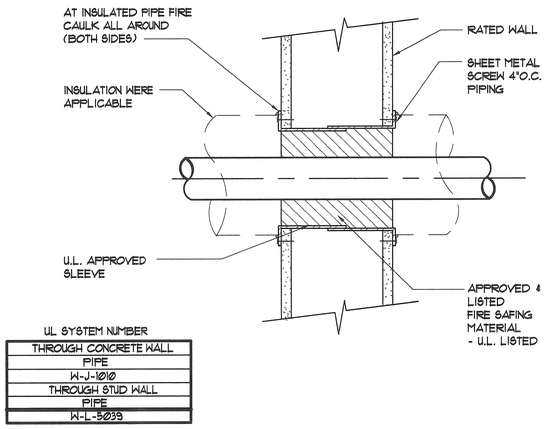

UL SYSTEM NUMBER
THROUGH CONCRETE WALL
PIPE
W-J-1010
THROUGH STUD WALL
PIPE
W-L-5039

PIPE THRU FIRE WALL DETAIL

NO SCALE — GEM-1016 — 7 / P4.1

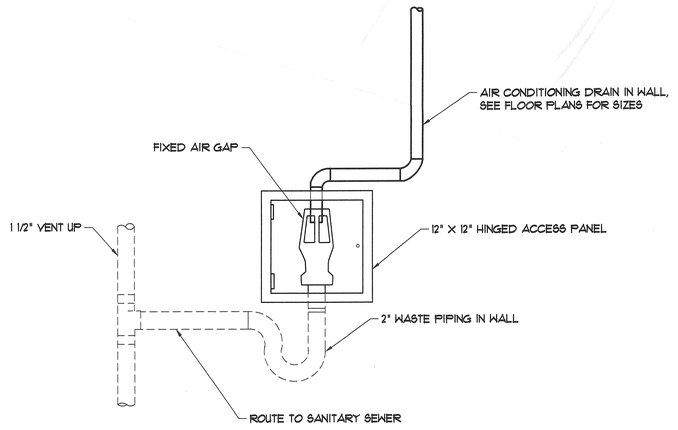

AIR GAP DETAIL

NO SCALE — 4 / P-4.1

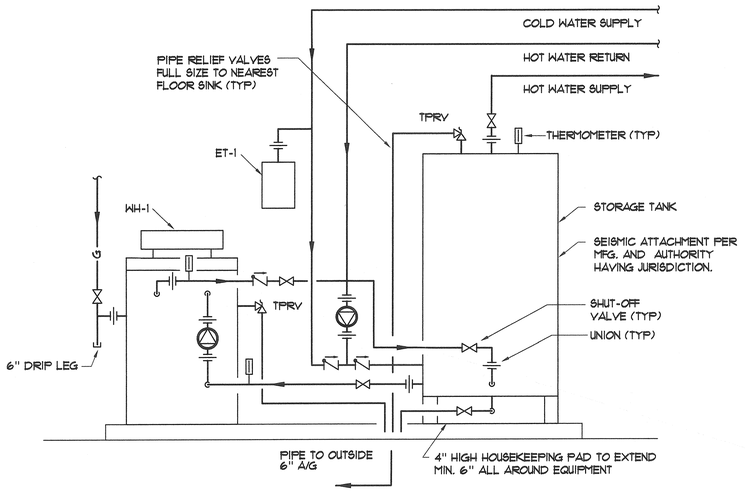

DOMESTIC WATER HEATER SCHEMATIC

NO SCALE — GEM- 1 / P-4.1

TANK SEISMIC RESTRAINT

NO SCALE — GEM-1012 — 8 / P-4.1

DRAW THRU AIR HANDLING UNIT CONDENSATE DRAIN CONNECTION

TYPICAL DRAIN DETAIL

NO SCALE — 5 / P-4.1

WATER HAMMER ARRESTOR ASSEMBLY DETAIL

NO SCALE — GEM-803 — 2 / P-4.1

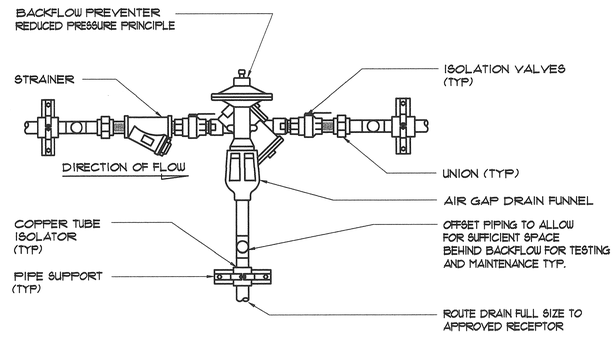

REDUCED PRESSURE BACKFLOW PREVENTER DETAIL

NO SCALE — 8 / P-4.1

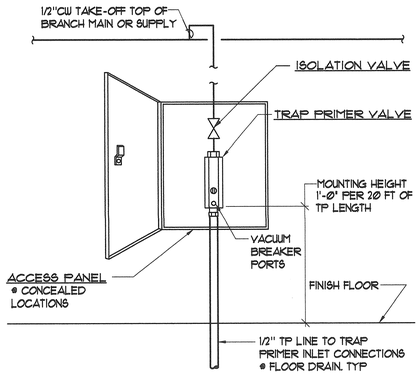

TRAP PRIMER VALVE ASSEMBLY

NO SCALE — GEM-1105 — 6 / P-4.1

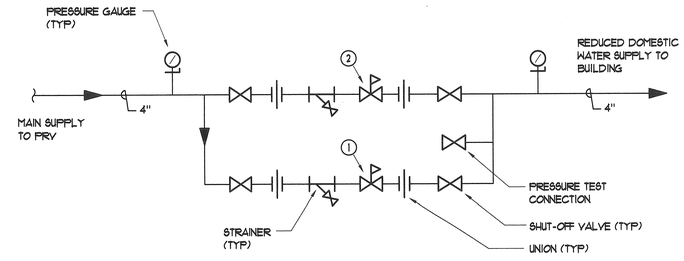

1. PRESSURE REDUCING VALVE, 1 1/2", WATTS 223 SERIES, 52 PSI, 80 GPM CAPACITY.
2. PRESSURE REDUCING VALVE, 2", WATTS 223 SERIES, 42 PSI, 100 GPM CAPACITY.

DOMESTIC WATER SYSTEM

PRESSURE REDUCING STATION

NO SCALE — GEM-1011 — 3 / P-4.1

ALL IDEAS, DESIGN, ARRANGEMENTS, OR PLANS SHALL BE USED BY, OR DISCLOSED TO ANY PERSON, FIRM, OR CORPORATION FOR ANY PURPOSE WHATSOEVER WITHOUT THE WRITTEN PERMISSION OF CARRIER JOHNSON. FILING THESE DRAWINGS OR SPECIFICATIONS WITH ANY PUBLIC AGENCY IS NOT A PUBLICATION OF SAME. NO COPYING, REPRODUCTION OR USE THEREOF IS PERMISSIBLE WITHOUT THE CONSENT OF CARRIER JOHNSON.

CARRIER JOHNSON
ARCHITECTURE
INTERIOR DESIGN
PLANNING
GORDON B. CARRIER AIA
MICHAEL C. JOHNSON AIA
WILLIAM C. BOCKEN AIA
DEBORAH P. ELLIOTT IIDA
2600 MICHELSON DRIVE SUITE 400 IRVINE, CALIFORNIA 92612
TEL 949 955-2553 FAX 949 955-2377
1301 THIRD AVENUE SAN DIEGO, CALIFORNIA 92101
TEL 619 239-2353 FAX 619 239-6227
GEM ENGINEERING, INC.
Consulting Mechanical Engineers
17355 Dallas Sat Brevard, Suite 105, San Diego, CA 92127
Phone: (858) 753-4455 Fax: (858) 753-7441

ONTARIO PD:: HEADQUARTERS

2534 S. ARCHIBALD AVE., ONTARIO, CALIFORNIA 91761

REVISIONS:
ASBUILT 04.30.2004

FO 9 FIELD ORDER 9 06.09.2003
5 Addendum 5 04.21.2003
3 Addendum 3
2 Addendum 2/Bldg. Dept. Re-Submittal 03.20.2003
Bulding Dept. Submittal 02.24.2003

ISSUES:
DIRECTORY/FILE NUMBER: 1346
1346P41.DWG
XREF'S DRAWINGS:
PROJECT NUMBER: 1346
DRAWN BY: CQ
CHECKED BY: JC
DATE: 04-30-04
SCALE: AS NOTED
TITLE: PLUMBING DETAILS

DRAWING NO: P-4.1

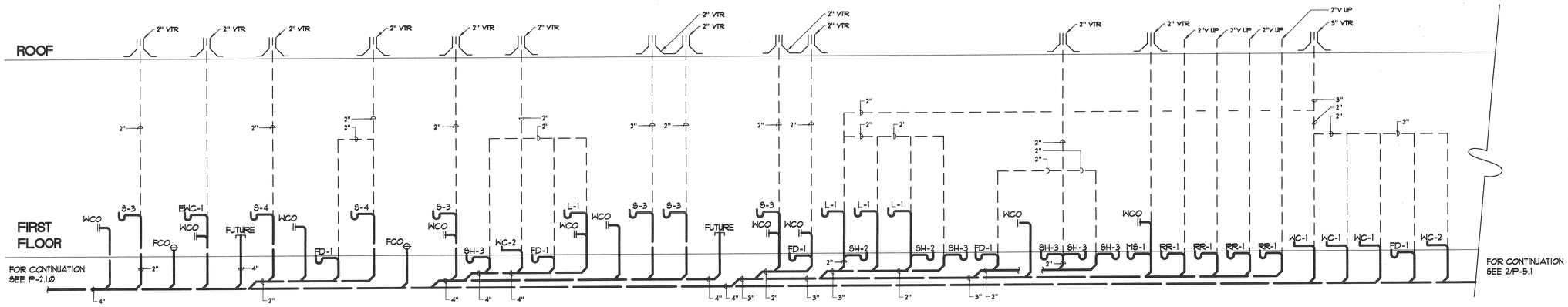

WASTE & VENT RISER DIAGRAM - NORTH

NOT TO SCALE

1 / P5.1

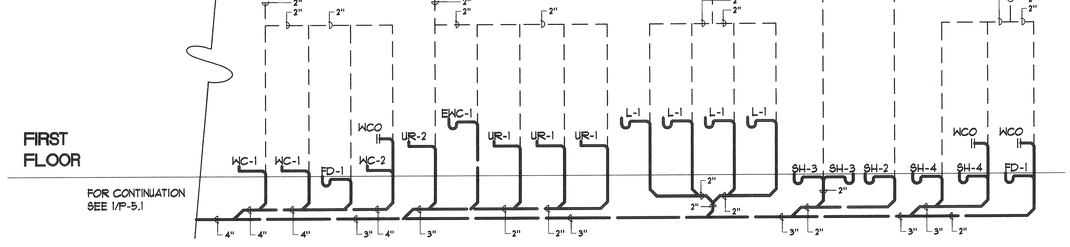

WASTE & VENT RISER DIAGRAM - NORTH

NOT TO SCALE

2 / P5.1

THIS AREA SHOWN FOR REFERENCE ONLY.
TO BE SUBMITTED/ REVIEWED UNDER SEPARATE PERMIT

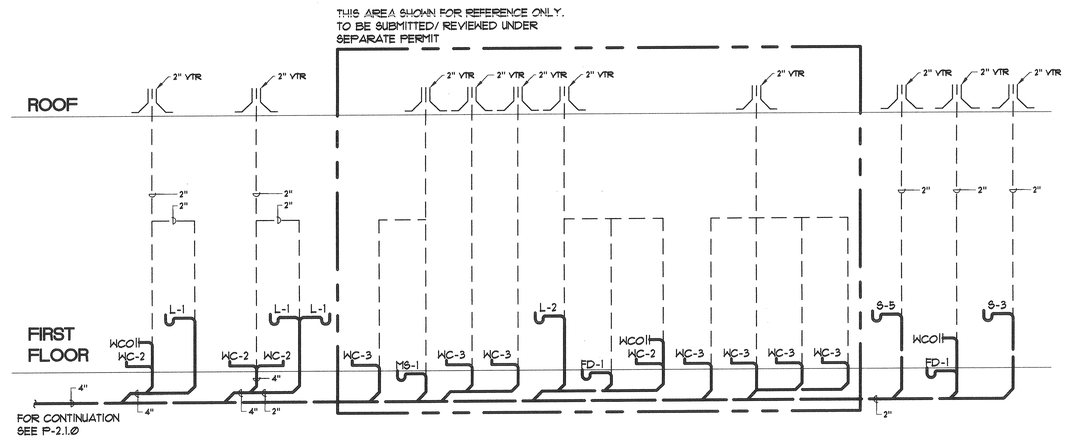

WASTE & VENT RISER DIAGRAM - SOUTH WEST

NOT TO SCALE

3 / P5.1

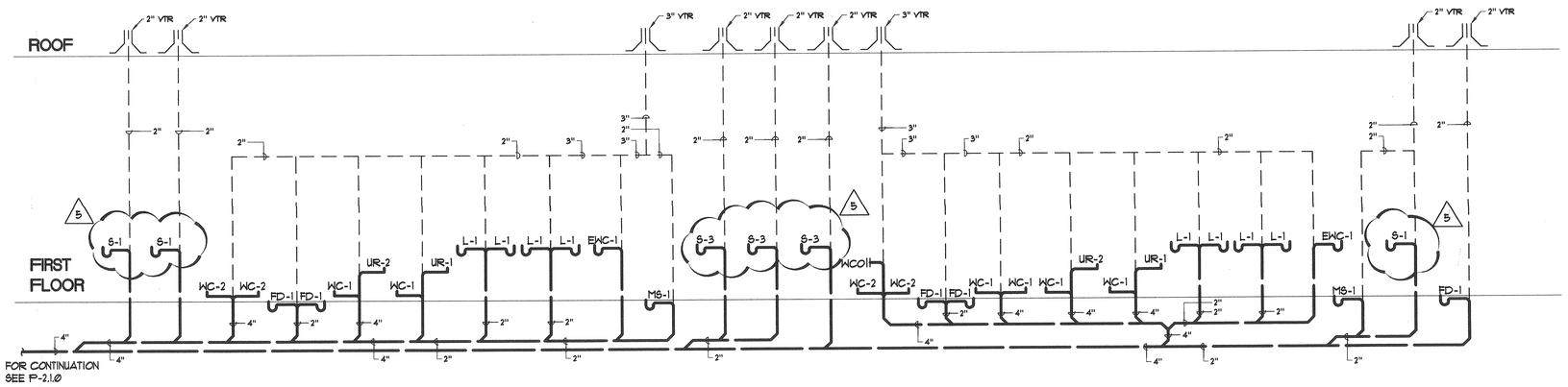

WASTE & VENT RISER DIAGRAM - SOUTH EAST

NOT TO SCALE

4 / P5.1

RECORD DRAWING
DEEL MECHANICAL CORPORATION
JOB #:
BY:
DATE: 2/24/04

ALL IDEAS, DESIGN, ARRANGEMENTS AND PLANS INDICATED OR REPRESENTED BY THIS DRAWING ARE OWNED BY, AND THE PROPERTY OF CARRIER JOHNSON AND WERE CREATED, EVOLVED AND DEVELOPED FOR USE ON, AND IN CONNECTION WITH THIS PROJECT. NONE OF SUCH IDEAS, DESIGN, ARRANGEMENTS, OR PLANS SHALL BE USED BY, OR DISCLOSED TO ANY PERSON, FIRM, OR CORPORATION FOR ANY PURPOSE WHATSOEVER WITHOUT THE WRITTEN PERMISSION OF CARRIER JOHNSON. FILING THESE DRAWINGS OR SPECIFICATIONS WITH ANY PUBLIC AGENCY IS NOT A PUBLICATION OF SAME. NO COPYING, REPRODUCTION OR USE THEREOF IS PERMISSIBLE WITHOUT THE CONSENT OF CARRIER JOHNSON.

CARRIER JOHNSON
ARCHITECTURE
INTERIOR DESIGN
PLANNING
GORDON R. CARRIER AIA
MICHAEL C. JOHNSON AIA
WILLIAM C. BOCKEN AIA
DEBORAH P. ELLIOTT IIDA
2600 MICHELSON DRIVE
SUITE 400
IRVINE, CALIFORNIA
92612
TEL 949 955-2353
FAX 949 955-2377
1301 THIRD AVENUE
SAN DIEGO, CALIFORNIA
92101
TEL 619 239-2353
FAX 619 239-8227

GEMETRICS, INC.
Consulting Mechanical Engineers
17855 Sistem St. Fifteenth, Suite 200, San Diego, CA 92127
Phone (858) 674-0400 Fax (858) 674-0405

ONTARIO PD:: HEADQUARTERS

2534 S. ARCHIBALD AVE., ONTARIO, CALIFORNIA 91761

REGISTERED PROFESSIONAL ENGINEER
FRANK SHADROUI
No. 23923
MECHANICAL
EXP. 9-30-05
STATE OF CALIFORNIA

5	Addendum 5 04.21.2003
3	Addendum 3
2	Addendum 2/Bldg. Dept. Re-Submittal 03.20.2003
Bulding Dept. Submittal	02.24.2003
ISSUES:	
DIRECTORY/FILE NUMBER:	1346
	1346P51.DWG
XREF'S DRAWINGS:	
PROJECT NUMBER:	1346
DRAWN BY:	CHECKED BY: JC
DATE:	03-19-03
SCALE:	AS NOTED
TITLE:	PLUMBING WASTE & VENT RISER DIAGRAM
DRAWING NO:	P-5.1

ELECTRICAL SYMBOL LIST

DASHED SYMBOL INDICATES EXISTING FIXTURE, DEVICE, OUTLET OR EQUIPMENT TO BE REMOVED
DASHED SYMBOL WITH "R" INDICATES EXISTING FIXTURE, DEVICE, OUTLET [redacted] DEVICE, OUTLET OR EQUIPMENT AT NEW LOCATION
SOLID SYMBOL WITH "X" INDICATES FIXTURE, DEVICE, OUTLET OR EQUIPMENT TO REMAIN
CONDUIT OR WIRING EXISTING TO REMAIN
CONDUIT OR WIRING TO BE REMOVED
REMOVE EXISTING WIRING, ABANDON CONDUIT
WIRE INSTALLED IN EXISTING CONDUIT
REMOVE EXISTING WIRE EXISTING CONDUIT TO REMAIN
INDICATES SURFACE MOUNTED BOX FOR ITEM SHOWN
INDICATES FLUSH MOUNTED BOX FOR ITEM SHOWN.
INDICATES "SURFACE RACEWAY" TYPE BOX WITH FIXTURE OR DEVICE SHOWN
LIGHTING FIXTURE SCHEDULE REFERENCE
EQUIPMENT (SCHEDULE) REFERENCE
MECHANICAL SCHEDULE REFERENCE
NOTE REFERENCE
FEEDER REFERENCE
NAMEPLATE SCHEDULE REFERENCE
DETAIL NUMBER DESIGNATION
SHEET DETAIL APPEARS ON
SECTION LETTER DESIGNATION
SHEET SECTION APPEARS ON
3 /E40 DETAIL OR SECTION REFERENCES IN NOTES
SHEET DETAIL APPEARS ON
DETAIL NUMBER DESIGNATION
+46" INDICATES MOUNTING HEIGHT ABOVE FINISHED FLOOR OR GRADE. CENTERLINE OF OUTLET BOX, OR BOTTOM OF SUSPENDED LIGHT FIXTURE, UON.
SUBSCRIPT ADJACENT TO LIGHTING FIXTURE INDICATES:
1,2,3 etc. = CIRCUIT NUMBERS
a,b,c etc. = SWITCH IDENTIFICATION
N. = NIGHT/SECURITY LIGHT
FLUORESCENT LIGHTING FIXTURE, RECESSED IN SUSPENDED T-GRID TYPE CEILING.
FLUORESCENT LIGHTING FIXTURE RECESSED IN GYPBOARD/ PLASTER TYPE CEILING.
SHADING INDICATES FIXTURES (SUPPLIED WITH EMERGENCY BATTERY PACK) (CONNECTED TO EMERGENCY POWER SYSTEM).
FLUORESCENT FIXTURES TANDEM WIRED. MASTER SHALL HAVE TWO BALLASTS FOR OUTSIDE LAMPS OF MASTER UNIT AND INSIDE LAMPS OF MASTER & SLAVE UNITS. SLAVE UNIT SHALL HAVE ONE BALLAST FOR OUTSIDE LAMPS OF SLAVE UNIT. FIXTURES SHALL BE CONNECTED WITH PRE-WIRED FLEXIBLE HARNESS.
TRACK LIGHT FIXTURE ASSEMBLY, CEILING OR PENDANT MOUNTED. (ARROW INDICATES AIMING DIRECTION.) (AIM AS DIRECTED)
SPOT OR FLOOD LIGHT FIXTURE(S) ON COMMON BOX AS SHOWN. (AIM AS DIRECTED.)(ARROW INDICATES AIMING DIRECTION)
EMERGENCY FLOOD LIGHT UNIT CONNECTED TO EMERGENCY POWER SYSTEM.
SINGLE DOUBLE
BATTERY POWERED EMERGENCY LIGHTING UNIT.
WALKWAY LUMINAIRE MOUNTED ON STEM.
BOLLARD TYPE LUMINAIRE.
POLE OR POST TYPE LUMINAIRE.
(IN-GRADE) (IN-FLOOR) UPLIGHT FIXTURE
LUMINAIRE(S) MOUNTED ON POLE.
FLUORESCENT LIGHTING FIXTURE. SURFACE MOUNTED ON CEILING.
FLUORESCENT LIGHTING FIXTURE, PENDANT, CHAIN OR STEM MOUNTED AT HEIGHT NOTED. "O" INDICATES FEED POINT.
FLUORESCENT LIGHTING FIXTURE, WALL MOUNTED AT HEIGHT NOTED.
FLUORESCENT STRIP LIGHTING FIXTURE.
DOWNLIGHT FIXTURE, RECESSED IN CEILING.
WALL WASH DOWNLIGHT RECESSED IN CEILING.
DOWNLIGHT FIXTURE, SURFACE MOUNTED ON CEILING OR PENDANT MOUNTED AT HEIGHT NOTED.
LIGHTING FIXTURE, WALL MOUNTED AT HEIGHT NOTED.
LIGHTED EXIT SIGN. TOP MOUNTED ON CEILING OR STEM MOUNTED AT HEIGHT NOTED. SHADED SIDE INDICATES FACE. PROVIDE ARROWS WHERE SHOWN TO INDICATE DIRECTION OF TRAVEL.
DOUBLE SIDED EXIT SIGN. PROVIDE ARROWS WHERE SHOWN TO INDICATE DIRECTION OF TRAVEL.
EXIT SIGNS IN AREAS OF RESTAINT ARE NOT REQUIRED (331A5, EXCEPTION)
BATTERY UNIT.
SUBSCRIPT ADJACENT TO SWITCHES INDICATE:
a,b,c etc. = FIXTURE CONTROLLED
2 = DOUBLE POLE
3 = THREE POLE
4 = FOUR WAY
P = PILOT LIGHTED
K = KEY OPERATED
M = MOMENTARY CONTACT ON-OFF WITH SPRING RETURN TO CENTER
T = MANUAL MOTOR STARTER WITH THERMAL OVERLOADS
LV = LOW VOLTAGE
ET = ELAPSED TIMER CONTROL SWITCH
S = SPRING WOUND TIMER SWITCH
TOGGLE SWITCH, SPST AT +48"UON.
INDICATES MULTIPLE SWITCHES IN GANGED BOX WITH COMMON COVERPLATE. (PROVIDE BARRIERS BETWEEN 120VOLT AND 277VOLT, TWO DIFFERENT 277VOLT CIRCUITS) (AND BETWEEN NORMAL, CRITICAL AND LIFE SAFETY BRANCH CIRCUITS.)
"a,b,c" INDICATES NUMBER OF INDIVIDUAL SWITCHES AND FIXTURES CONTROL.
INDICATES SWITCHES a,b MOUNTED IN SEPARATE BOXES WITH SEPARATE COVERPLATES.
SWITCH WITH PILOT LIGHT
DIMMING CONTROL SWITCH, AT +48"UON.
WALL MOUNTED MOTION OCCUPANCY SENSOR WITH ON/OFF SWITCH AT +48"UON.
CEILING MOUNTED OCCUPANCY SENSOR - ONE WAY TYPE.
CEILING MOUNTED OCCUPANCY SENSOR - TWO WAY TYPE.
CEILING MOUNTED OCCUPANCY SENSOR - TWO WAY NARROW BEAM TYPE.
EMERGENCY POWER OFF PUSH BUTTON MOUNTED AT +48" UON.
PUSH BUTTON STATION AT +48" UON.
DOOR BELL PUSH BUTTON STATION AT +48" UON.
HAND-OFF-AUTO SELECTOR SWITCH AT +48" UON.
MAGNETIC MOTOR STARTER. NUMBER DENOTES NEMA SIZE.
FUSED SAFETY DISCONNECT SWITCH.
NON-FUSED SAFETY DISCONNECT SWITCH.
ENCLOSED CIRCUIT BREAKER.
COMBINATION FUSED OR CIRCUIT BREAKER, DISCONNECT STARTER.

CONTACTOR.
RELAY.
[redacted]
DUPLEX RECEPTACLE, WALL MOUNTED AT +18" UON. "GFI" INDICATES GROUND FAULT INTERRUPTER TYPE.
DUPLEX RECEPTACLE, WALL MOUNTED AT +18" UON. "E" DENOTES RECEPTACLE CONNECTED TO EMERGENCY POWER (DEVICE FACE TO BE RED).
DUPLEX RECEPTACLE MOUNTED AT CEILING.
DUPLEX RECEPTACLE IN 'AMP' ACCESS FLOOR BOX WORKSTATION MODULE.
TWO DUPLEX RECEPTACLES (FOURPLEX) IN 'AMP' ACCESS FLOOR BOX WORKSTATION MODULE.
TWO DUPLEX RECEPTACLES (FOURPLEX) IN TWO GANG BOX AT +18" UON.
DUPLEX RECEPTACLE TOP HALF SWITCHED, WITH SWITCH DESIGNATION.
SINGLE RECEPTACLE WALL MOUNTED AT +18" UON.
RECEPTACLE MOUNTED HORIZONTALLY (4" ABOVE COUNTER BACKSPLASH) (AT HEIGHT NOTED). SEE ARCHITECTURAL ELEVATIONS.
ISOLATED GROUND RECEPTACLE WALL MOUNTED AT +18" UON.
DUPLEX TRANSIENT SUPPRESSION TYPE RECEPTACLE AT +18" UON.
DUPLEX RECEPTACLE AND TOGGLE SWITCH MOUNTED IN 2 GANG BOX WITH COMMON COVER PLATE AT +48" UON.
FURNITURE SYSTEMS POWER CONNECTION (AT FLOOR BOX)(AT CEILING POLE).
INTERIOR "POWER POLE" WITH POWER, TELEPHONE, DATA, ETC. OUTLETS AS INDICATED.
INTERLOCKING SAFETY RECEPTACLE (FOR WELDERS) AT +----" UON.
HEAVY DUTY (INDUSTRIAL TYPE) RECEPTACLE OUTLET AS NOTED AT +----" UON.
SPECIAL PURPOSE RECEPTACLE AS DESCRIBED ON PLANS. CAPITAL LETTER DESCRIBES TYPE, SEE SCHEDULE.
CONDUIT CONCEALED IN WALL OR CEILING.
CONDUIT EXPOSED.
CONDUIT CONCEALED UNDERGROUND, OR IN FLOORS ABOVE GRADE.
ELECTRICAL UNDERGROUND DUCT BANK.
TELEPHONE/ COMMUNICATIONS SYSTEM UNDERGROUND DUCT BANK.
ELECTRICAL/TELEPHONE/COMMUNICATIONS SYSTEM UNDERGROUND DUCT BANK.
WIRING OR CONDUIT CONCEALED UNDER COMPUTER FLOOR.
FLEXIBLE CONDUIT.
EXPOSED CORD OR CABLES.
SURFACE METAL RACEWAY.
2 SECTION SURFACE MOUNTED RACEWAY. FIRST ½ SECTION - POWER, WITH DUPLEX RECEPTACLE EVERY 2' ON CENTER AND SECOND ½ SECTION - TEL/DATA.
SURFACE RACEWAY. OUTLET SYMBOL DENOTES TYPE OF RECEPTACLE IN MULTIOUTLET ASSEMBLY. 12" DENOTES THE RECEPTACLE SPACING UON.
(MULTI-OUTLET ASSEMBLY)(PLUG STRIP), LENGTH AS INDICATED ON PLANS.
CONDUIT TURNED UP. CONDUIT TURNED DOWN.
CONDUIT CHANGE IN HORIZONTAL ELEVATION.
CONDUIT TERMINATED AND CAPPED.
ELECTRICAL DUCT THROUGH EXISTING A/C PAVING, CONCRETE OR LANDSCAPE. (CUT PATCH AND REPAIR SURFACES TO MATCH EXISTING.) (CUTTING AND PATCHING UNDER OTHER SECTION OF WORK.)
EMERGENCY SYSTEM CONDUIT.
GROUNDING CONDUIT OR WIRE.
HA-1,3 HOMERUN TO PANELBOARD.
CROSSMARKS DENOTE QUANTITY OF #12 PHASE AND NEUTRAL WIRES ONLY IN BRANCH CIRCUIT CONDUIT. NO CROSSMARKS DENOTES 2#12 WIRES. NUMBER ADJACENT TO CROSSMARKS DENOTES WIRE SIZE OTHER THAN #12 BRANCH CIRCUIT CONDUIT.
TRENCH OR HEADER FLOOR DUCT WITH FLUSH COVERS AND DIVIDERS AS NOTED.
UNDERFLOOR DUCT WITH INSERTS AT "-----" ON CENTER, UON. E = POWER: T = TELEPHONE/COMMUNICATIONS: D = DATA: B = BLANK (W/O INSERTS)
DISTRIBUTION PANEL OR SWITCHBOARD.
SURFACE FLUSH PANELBOARD.
SURFACE FLUSH SIGNAL SYSTEM CABINETS AS NOTED.
TRANSFORMER, FLOOR MOUNTING TYPE. (PLAN VIEW)
TRANSFORMER, WALL MOUNTING TYPE. (PLAN VIEW)
MOTOR CONNECTION.
ELECTRICAL HEATER CONNECTION.
JUNCTION OR OUTLET BOX. CEILING OR WALL MOUNTED AS INDICATED. LOCATE ABOVE ACCESSIBLE CEILINGS, UON.
CABLE JUNCTION, PULL OR TAP BOX.
METER SOCKET OR PANEL.
GROUND ROD.
GROUNDING ROD IN FLUSH UNDERGROUND UTILITY PULL BOX.
GROUNDING JACK WALL MOUNTED AT +---" UON.
CABLE TRAY.
BUS DUCT, RATING AND PLUG IN DEVICE AS INDICATED ON PLANS.
UNDERGROUND (MANHOLE)(HANDHOLE)(AND)(OR)(PULL BOXES). "E" INDICATES ELECTRICAL: "T" INDICATES TELEPHONE/COMMUNICATIONS
KIRK KEY INTERLOCK.
GROUNDING ELECTRODE.
BUS OR TERMINALS. ("G" DENOTES GROUND.) ("N" DENOTES NEUTRAL.)
CIRCUIT BREAKER, ("M" DENOTES MOTOR PROTECTOR TYPE.) ("E" DENOTES ELECTRONIC TRIP TYPE.)("L" INDICATES CURRENT LIMITING TYPE.) ("S" DENOTES SYSTEM TYPE.)
MOTOR STARTER WITH THERMAL OVERLOADS (NUMBER INDICATES STARTER SIZE.)
DRAW-OUT TYPE CIRCUIT BREAKER.
SPLICE.
TERMINAL.
CABLE TERMINATOR.
ELBOW TYPE CONNECTOR.
FUSED SWITCH.
DRAW-OUT TYPE FUSE.
SURGE ARRESTER.
TRANSFORMER - SINGLE LINE DIAGRAM.
(400:5) CT: CURRENT TRANSFORMER (BY SDG&E) (BY IID) (WITH RATIO NOTED) NUMBER INDICATES QUANTITY.
CPT: CONTROL POWER TRANSFORMER WITH LINE LOAD SIDE FUSES. FUSED CUTOUT.
LIMIT SWITCH.
(CONTACTOR) (RELAY) COIL.
SOLENOID.
NORMALLY CLOSED/ NORMALLY OPEN CONTACTS.

FIXED FUSIBLE ELEMENT.
CARTRIDGE FUSE
SELECTOR SWITCH
[redacted]
FLEXIBLE BUS CONNECTION.
BATTERY.
RESISTOR, HEATER OR LIGHT SENSITIVE ELEMENT.
PILOT LIGHT WITH COLOR NOTED. "R" = RED: "G" = GREEN: "W" = WHITE: "A" = AMBER
WATTMETER
VOLTMETER
VOLTMETER SWITCH
AMMETER
AMMETER SWITCH
KILOWATT HOUR METER WITH DEMAND INDICATION.
KILOWATT HOUR METER.
POWER TRANSDUCER.
WWHT = WATT-WATTHOUR
WT = WATT
AT = CURRENT
VT = VOLTAGE
TELEPHONE BACKBOARD. 3/4" PLYWOOD, LENGTH AND WIDTH AS NOTED.
TELEPHONE OUTLET WALL MOUNTED AT +18" UON. "W" DENOTES WALL MOUNTED AT 48" UON.
PAY TELEPHONE OUTLET AT +48" UON.
TELEPHONE OUTLET MOUNTED IN 'AMP' ACCESS FLOOR BOX WORKSTATION MODULE.
FURNITURE SYSTEMS TELEPHONE/DATA CONNECTION (AT FLOOR BOX)(AT CEILING FOR POLE).
(PUBLIC ADDRESS) (MUSIC) SYSTEM MICROPHONE JACK, WALL MOUNTED AT +18" UON.
PROJECTOR OUTLET, WALL MOUNTED AT +18" UON.
PROJECTOR FLOOR OUTLET
ASSISTED LISTENING DEVICE ANTENNA
(PUBLIC ADDRESS) (MUSIC) SYSTEM MICROPHONE JACK MOUNTED IN 'AMP' ACCESS FLOOR BOX WORKSTATION MODULE.
(PUBLIC ADDRESS) (MUSIC) SYSTEM MICROPHONE. PROVIDE CORD AND JACK PLUG TO MATCH OUTLET.
REMOTE VOLUME CONTROL, WALL MOUNTED AT +48" UON.
CARD READER ROUGH-IN. PROVIDE 1"C.O. INTO ACCESSIBLE CEILING SPACE UON.
DOOR LOCK/STRIKE ROUGH-IN. PROVIDE ½"C.O. INTO ACCESSIBLE CEILING SPACE UON.
SECURITY CAMERA ROUGH-IN. PROVIDE ¾"C.O. INTO ACCESSIBLE CEILING SPACE UON.
DOOR CONTACT ROUGH-IN. PROVIDE ½"C.O. INTO ACCESSIBLE CEILING SPACE UON.
STRIKE RELEASE ROUGH-IN. PROVIDE ½"C.O. INTO ACCESSIBLE CEILING SPACE UON.
INFRARED DETECTOR (REQUEST TO EXIT). PROVIDE ½"C.O. INTO ACCESSIBLE CEILING SPACE UON.
PANIC ALARM. PROVIDE ½"C.O. INTO ACCESSIBLE CEILING SPACE UON.
SECURITY SYSTEM PASSIVE INFRARED DETECTOR WITH BROAD BEAM COVERAGE AND ZONE NUMBER INDICATED. WALL MOUNTED AT +---" UON.
SECURITY SYSTEM PASSIVE INFRARED DETECTOR WITH LONG NARROW BEAM COVERAGE AND ZONE NUMBER INDICATED. WALL MOUNTED AT +96" UON.
SURFACE FLUSH SECURITY SYSTEM GLASS BREAKAGE DETECTOR WITH ZONE NUMBER INDICATED. CEILING MOUNTED.
SECURITY SYSTEM MAGNETIC DOOR SWITCH CONTACTS WITH ZONE NUMBER INDICATED. (MOUNT FLUSH IN TOP OF DOOR FRAME.) (MOUNT SURFACE ON TOP OF DOOR FRAME.)
SECURITY SYSTEM AUDIBLE ALARM, WALL MOUNTED AT +---" UON.
SECURITY SYSTEM ACCESS CONTROL KEYPAD, WALL MOUNTED AT +48" UON.
TELEVISION SYSTEM OUTLET WITH JACK, WALL MOUNTED AT +18" UON.
TELEVISION SYSTEM OUTLET WITH JACK CEILING MOUNTED.
TELEVISION SYSTEM OUTLET WITH JACK IN FLOOR BOX.
DATA OUTLET BOX ONLY WITH BLANK PLATE, WALL MOUNTED AT +18" UON. (DATA INSERTS AND CABLING NIC.) (PROVIDE ¾"C.O. TERMINATED IN ACCESSIBLE CEILING WITH INSULATED BUSHING.)
IDF INTERMEDIATE DISTRIBUTION FRAME
MDF MAIN DISTRIBUTION FRAME
QUAD DATA OUTLET WITH (4) WIRED INSERTS AND MATCHING PLATE. (PROVIDE ¾"C.O. TERMINATED IN ACCESSIBLE CEILING WITH INSULATED BUSHING.)
QUAD DATA OUTLET WITH (3) WIRED INSERTS AND MATCHING PLATE. (PROVIDE ¾"C.O. TERMINATED IN ACCESSIBLE CEILING WITH INSULATED BUSHING.)
DUAL DATA OUTLET WITH (2) WIRED INSERTS AND MATCHING PLATE. (PROVIDE ¾"C.O. TERMINATED IN ACCESSIBLE CEILING WITH INSULATED BUSHING.)
SINGLE DATA OUTLET WITH (1) WIRED INSERTS AND MATCHING PLATE. (PROVIDE ¾"C.O. TERMINATED IN ACCESSIBLE CEILING WITH INSULATED BUSHING.)
DUAL DATA OUTLET WITH (2) WIRED INSERTS AND MATCHING PLATE. (PROVIDE ¾"C.O. TERMINATED IN ACCESSIBLE CEILING WITH INSULATED BUSHING.) MOUNTED ABOVE ACCESSIBLE CEILING.
COMBINATION TELEPHONE/DATA WALL MOUNTED JUNCTION BOX WITH BLANK PLATE AND FLEXIBLE CONDUIT TO MODULAR FURNITURE.
POWER WALL MOUNTED JUNCTION BOX WITH BLANK PLATE AND FLEXIBLE CONDUIT TO MODULAR FURNITURE.
COMBINATION TELEPHONE/DATA FLOOR JUNCTION BOX WITH BLANK PLATE AND FLEXIBLE CONDUIT TO MODULAR FURNITURE.
POWER FLOOR JUNCTION BOX WITH BLANK PLATE AND FLEXIBLE CONDUIT TO MODULAR FURNITURE.
COMBINATION TELEPHONE/DATA OUTLET WALL MOUNTED AT +18" UON.
DATA OUTLET IN 'AMP' ACCESS FLOOR BOX WORKSTATION MODULE.
COMBINATION TELEPHONE/DATA OUTLET IN 'AMP' ACCESS FLOOR BOX WORKSTATION MODULE.
BUZZER MOUNTED AT +----" UON.
DOOR BELL CHIME MOUNTED AT +----" UON.
CLOSED CIRCUIT TELEVISION (CCTV) CAMERA WALL MOUNTED AT +----" UON.
CCTV CLOSED CIRCUIT TELEVISION (CCTV) MONITOR DESK MOUNTED WITH CABLE(S) TO OUTLET ON WALL. (WALL MOUNTED AT +----" UON.)
SLAVE PACK
PASSIVE INFRARED WALL SWITCH
BI-LEVEL PASSIVE INFRARED WALL SWITCH
A WALL/CEILING MOUNTED PASSIVE INFRARED SENSOR
B CEILING MOUNTED PASSIVE INFRARED SENSOR
C CEILING MOUNTED ULTRASONIC SENSOR
D WALL CEILING MOUNTED DUAL TECHNOLOGY SENSOR
E CEILING MOUNTED 360° ULTRASONIC HALLWAY SENSOR
F CEILING MOUNTED PASSIVE INFRARED HALLWAY SENSOR
G CEILING MOUNTED ULTRASONIC SENSOR
WP WALL MOUNTED OUTDOOR INFRARED MOTION SENSOR
SFD SFD/* = SMOKE AND FIRE DAMPER. (VERIFY EXACT LOCATION AND MOUNTING OF ALL SYSTEM DEVICES WITH OWNER'S REPRESENTATIVE PRIOR TO ROUGH-IN.

SEE SHEET FA01 FOR FIRE ALARM SYMBOLS

ELECTRICAL ABBREVIATIONS

A	
AC	ALTERNATING CURRENT
A OR AMP	AMPERE
AIC	AMPS, INTERRUPTING CAPACITY
A	AMP, AMPERE
ACB	AIR CIRCUIT BREAKER
AFF	ABOVE FINISHED FLOOR
AL	ALUMINUM
ARCH	ARCHITECT
AWG	AMERICAN WIRE GAGE
B	
BD	BOARD
BATT	BATTERY
BLDG	BUILDING
BKBD	BACKBOARD
C	
CCT.	CIRCUIT
C	CONDUIT
CABT	CABINET
CAC	CALIFORNIA ADMINISTRATIVE CODE
CB C/B	CIRCUIT BREAKER
CLG	CEILING
CO	CONDUIT ONLY
COL	COLUMN
COMM	COMMUNICATIONS
CONC	CONCRETE
CONN	CONNECT, CONNECTION, CONNECTIVE
CONTIN	CONTINUATION, CONTINUED
COORD	COORDINATE
CORR	CORRIDOR
CU	COPPER
D	
D	DEEP, DEPTH
DB	DIRECT BURIED
DGP	DATA GATHERING PANEL
DIM	DIMENSION
DIA	DIAMETER
DIAG	DIAGRAM
DISC	DISCONNECT
DIST	DISTRIBUTION
DN	DOWN
DWG	DRAWING
E	
EA	EACH
EB	ENCASED BURIAL
EQUIP	EQUIPMENT
ELEC	ELECTRIC, ELECTRICAL
ELEV	ELEVATION, ELEVATOR
EMCS	EMERGENCY MANAGEMENT & CONTROL SYSTEM
EMERG	EMERGENCY
EPO	EMERGENCY POWER OFF
EWC	ELECTRIC WATER COOLER
EXH	EXHAUST
EXIST	EXISTING
F	
FA	FIRE ALARM
FACP	FIRE ALARM CONTROL PANEL
FIXT	FIXTURE
FLEX	FLEXIBLE METAL CONDUIT
FLUOR	FLUORESCENT
FM	FIRE MARSHAL
FT	FOOT, FEET
G	
G, GND	GROUND (ED) (ING)
GA	GAGE
GALV	GALVANIZED
GFCI	GROUND FAULT CIRCUIT INTERRUPTER
H	
HH	HANDHOLE
HID	HIGH INTENSITY DISCHARGE
HORIZ	HORIZONTAL
HP	HORSEPOWER
HPS	HIGH PRESSURE SODIUM
HT	HEIGHT
HZ	HERTZ
I	
I.G.	ISOLATED GROUND
INCAN	INCANDESCENT
ISC	SHORT CIRCUIT CURRENT
J	
JB	JUNCTION BOX
JIC	JOINT INDUSTRY CONFERENCE
K	
KO	KNOCKOUT
KV	KILOVOLT(S)
KW	KILOWATT(S)
KVA	KILOVOLT AMPERES
L	
LPS	LOW PRESSURE SODIUM
LTG	LIGHTING
LT.	LIGHT
LT. FIX.	LIGHT FIXTURE
LV	LOW VOLTAGE
M	
MAX	MAXIMUM
MAG	MAGNETIC
MCB	MAIN CIRCUIT BREAKER
MECH	MECHANICAL
MFGR	MANUFACTURER
MH	MANHOLE
MIN	MINIMUM
MISC	MISCELLANEOUS
MLO	MAIN LUGS ONLY
MTD	MOUNTED
MTG	MOUNTING
MT.	MOUNT
N	
NEC	NATIONAL ELECTRIC CODE
NECA	NATIONAL ELECTRICAL CONTRACTORS ASSOCIATION
NEMA	NATIONAL ELECTRICAL MANUFACTURERS ASSOCIATION
NFPA	NATIONAL FIRE PROTECTION AGENCY
NF	NON-FUSED, NON FUSIBLE
NIC	NOT IN CONTRACT
NO.	NUMBER
NC	NORMALLY CLOSED
NL	NIGHT LIGHT
NM	NON-METALLIC
NTS	NOT TO SCALE
O	
OC	ON CENTER
P	
PH OR Ø	PHASE
P	POLE(S)
PF	POWER FACTOR
PNL	PANEL
PRI	PRIMARY
PVC	POLYVINYL CHLORIDE
R	
RECPT	RECEPTACLE
REC	RECESSED
REF	REFERENCE
REQD	REQUIRED
REQMT	REQUIREMENT
RF	RADIO FREQUENCY
RM	ROOM
RT	RAINTIGHT
R/O.	RECEPTACLE OUTLET
S	
SEC.	SECONDARY
SECT	SECTION
SHT	SHEET
SN	SOLID NEUTRAL
SQ	SQUARE
SPEC	SPECIFICATION(S)
ST	SHUNT TRIP
STRUCT	STRUCTURE, STRUCTURAL
SW	SWITCH
SWBD	SWITCHBOARD
T	
TEL	TELEPHONE
TEMP	TEMPORARY
TERM	TERMINAL
TFMR	TRANSFORMER
TRANSF	TRANSFORMER
T.T.B.	TELEPHONE TERMINAL BOARD
TV	TELEVISION
TYP	TYPICAL
U	
U/G, UG	UNDERGROUND
UBC	UNIFORM BUILDING CODE
UCS	UTILITY CONTROL SYSTEM
U/C	UNDERCOUNTER
U/F	UNDERFLOOR
UON	UNLESS OTHERWISE NOTED
UL	UNDERWRITERS LABORATORIES
V	
V	VOLT
VA	VOLTAMPERE
VAC	VACUUM
VT	VAPORTIGHT
W	
W	WATT
WP	WEATHERPROOF

OVERCURRENT DEVICE KEY

CIRCUIT BREAKER		SAFETY SWITCHES		COMBINATION STARTER DISCONNECTS/ STARTER - CIRCUIT BREAKER	
NUMBERS OF POLES	3	NUMBERS OF POLES	3	NUMBERS OF POLES	3
TRIP (AMPERES)	*	FUSE SIZE (AMPS)	*	FUSE/CB TRIP SIZE	*
FRAME (AMPERES)	100	RATING (AMPERES)	100	SWITCH/FRAME SIZE	100
I.C. (1000 AMPS)	10	FUSE CLASS (UL)	RK5	STARTER NEMA SIZE	1

* "NA" INDICATES NON-AUTOMATIC C/B
* "NF" INDICATES NON-FUSED SWITCH
* "50" INDICATES TRIP OR FUSE SIZE

RECORD DOCUMENTS

THESE DOCUMENTS RELEASED BY CARRIER JOHNSON FOR USE AS RECORD DOCUMENTS WILL SHOW THE REPORTED LOCATION OF THE WORK AND SIGNIFICANT CHANGES MADE DURING THE CONSTRICTION PROCESS, AND ARE BASED ON UNVERIFIED INFORMATION PROVIDED BY THE CONTRACTOR AND OTHER PARTIES WHICH WILL BE ASSUMED RELIABLE. CARRIER JOHNSON CANNOT AND DOES NOT WARRANT THE ACCURACY AND/OR COMPLETENESS OF THIS INFORMATION AND SHALL NOT BE RESPONSIBLE FOR ANY ERRORS OR OMISSIONS WHICH MAY BE INCORPORATED THEREIN AS A RESULT. FUTURE CONSTRUCTION PLANNING MUST INCLUDE FIELD CONFIRMATION OF EXISTING CONDITIONS.

ILA ZAMMIT ENGINEERING GROUP
Consulting Electrical Engineers
3625 Ruffin Rd., Suite 300
San Diego, CA. 92123
(858) 279-0242 - FAX (858) 279-0711

REGISTERED PROFESSIONAL ENGINEER STONE L. FROBERG No. 5950 Exp. 9/30/02 ELECTRICAL STATE OF CALIFORNIA

CARRIER JOHNSON
ARCHITECTURE
INTERIOR DESIGN
PLANNING
GORDON R. CARRIER AIA
MICHAEL C. JOHNSON AIA
WILLIAM C. BO...EN AIA
DEBORAH P. ELL... IDA
2600 MICHELSON DRIVE
SUITE 400
IRVINE, CALIFORNIA
926..
TEL 949 955-2353
FAX 949 955-2377
1301 THIRD AVENUE
SAN DIEGO, CALIFORNIA
92101
TEL 619 239-2353
FAX 619 239-6227

ONTARIO POLICE DEPARTMENT HEADQUARTERS
ONTARIO, CA

ISSUES:
DIRECTORY/FILE NUMBER: J:/035-050
XREF'S DRAWINGS:
PROJECT NUMBER: 035-050
DRAWN BY: ILAZ-CADD
CHECKED BY: SF
DATE:
SCALE: NO SCALE
TITLE: ELECTRICAL SYMBOL LIST
DRAWING NO: E1.1

INTERIOR LUMINAIRE SCHEDULE

TYPE	DESCRIPTION:	LAMP:	LOAD:	MANUFACTURER:
A	2' x 4' RECESSED 2 LAMP LENSED FL TROFFER WITH ACRYLIC PRISMATIC LENS AND SYLVANIA COMBINATION 'XTREME' SERIES HIGH EFFICIENCY ELECTRONIC BALLAST AND LAMPS.	2 FO32/835/XPS 32 WATTS 3500°K	48 W 277 V	COLUMBIA # 4PS 24 2 32 G AFA A19 277 SLL PAF SYLVANIA # QTP 2X32T8/UNV PSX
A2	SAME AS TYPE 'A' EXCEPT WITH 5000?K LAMP.	2 FO32/850/XPS 32 WATTS 5000°K	48 W 277 V	COLUMBIA # 4PS 24 2 32 G AFA A19 277 SLL PAF SYLVANIA # QTP 2X32T8/UNV PSX
B	2' x 4' RECESSED 2 LAMP INDIRECT FL WITH PERF METAL BASKET AND SYLVANIA COMBINATION 'XTREME' SERIES HIGH EFFICIENCY ELECTRONIC BALLAST AND LAMPS.	2 FO32/835/XPS 32 WATTS 3500°K	48 W 277 V	COLUMBIA # STR 24 2 32 G MPO 277 SYLVANIA # QTP 2X32T8/UNV PSX
B3	SAME AS TYPE 'B' EXCEPT WITH 3 LAMPS.	2 FO32/835/XPS 32 WATTS 3500°K	72 W 277 V	COLUMBIA # STR 24 3 32 G MPO 277 SYLVANIA # QTP 3X32T8/UNV PSX
C	2' x 4' RECESSED 2 LAMP MINIMUM SECURITY GRADE FL FIXTURE WITH EM BATTERY PACK AND SYLVANIA COMBINATION 'XTREME' SERIES HIGH EFFICIENCY ELECTRONIC BALLAST AND LAMPS.	2 FO32/835/XPS 32 WATTS 3500°K	48 W 277 V	MORLITE # FH S 24 232 2/F F2 EMG 277 SYLVANIA # QTP 2X32T8/UNV PSX
D	2' x 4' RECESSED 2 LAMP PARABOLIC FL TROFFER WITH 3" DEEP CELL LOUVER, EM BATTERY PACK, AND SYLVANIA DIMMING BALLAST.	2 FO32/835/XPS 32 WATTS 3500°K	67 W 277 V	COLUMBIA # P2 24 2 32 LD 2 6 S 277 EL SYLVANIA # QTP 2X32T8/277-DIM5
E	2' x 4' RECESSED 4 LAMP LENSED FL HIGH-EFFICIENCY TROFFER WITH ACRYLIC PRISMATIC LENS AND SYLVANIA COMBINATION 'XTREME' SERIES HIGH EFFICIENCY ELECTRONIC BALLAST AND LAMPS.	4 FO32/835/XPS 32 WATTS 3500°K	94 W 277 V	COLUMBIA # JTS 24 4 32 G FS A19 277 SLL PAF SYLVANIA # QTP 4X32T8/UNV PSX
F	SAME AS TYPE 'A' EXCEPT WITH SYLVANIA DIMMING BALLAST.	2 FO32/835/XPS 32 WATTS 3500°K	67 W 277 V	COLUMBIA # 4PS 24 3 32 G FA A19 277 SLL PAF SYLVANIA # QTP 2X32T8/277-DIM5
G	WET LOCATION 2' x 4' RECESSED 2 LAMP LENSED FL TROFFER WITH SYLVANIA COMBINATION 'XTREME' SERIES HIGH EFFICIENCY ELECTRONIC BALLAST AND LAMPS.	2 FO32/835/XPS 32 WATTS 3500°K	48 W 277 V	COLUMBIA # WLT 24 232 G FS A12.125 277 SYLVANIA # QTP 2X32T8/UNV PSX
H	6" RECESSED OPEN COMPACT FLUORESCENT DOWNLIGHT WITH SEMI-SPECULAR REFLECTOR AND ELECTRONIC BALLAST.	1 CF32DT/E/835 32 WATTS 3500°K	35 W 277 V	COLUMBIA # CFT632HEB-STF602H 277V SS
J	6" RECESSED COMPACT FLUORESCENT DOWNLIGHT WITH DECORATIVE GLASS OPTIC AND ELECTRONIC BALLAST.	1 CF32DT/E/835 32 WATTS 3500°K	35 W 277 V	WILA # 121 32 277 SA ETR6 SYLVANIA # QTP 1X32CF/277
K	SUSPENDED 2 LAMP INDIRECT FL FIXTURE WITH PERFORATED HOUSING AND SYLVANIA COMBINATION 'XTREME' SERIES HIGH EFFICIENCY ELECTRONIC BALLAST AND LAMPS. 4', 8', OR 12' SECTIONS PER PLAN.	2/4' FO32/835/XPS 32 WATTS 3500°K	48 W/4' 277 V	ALERA INDECON SERIES # IDC 2T8 AP FCM 24 277 MW TBAR SYLVANIA # QTP 2X32T8/UNV PSX
K2	SAME AS TYPE 'K' EXCEPT WITH 5000?K LAMPS.	2/4' FO32/850/XPS 32 WATTS 5000°K	48 W/4' 277 V	ALERA INDECON SERIES # IDC 2T8 AP FCM 24 277 MW TBAR SYLVANIA # QTP 2X32T8/UNV PSX
L	4' SECTION SUSPENDED 2 LAMP INDUSTRIAL FL STRIP WITH ACRYLIC SHIELDING AND SYLVANIA COMBINATION 'XTREME' SERIES HIGH EFFICIENCY ELECTRONIC BALLAST AND LAMPS.	2 FO32/835/XPS 32 WATTS 3500°K	48 W 277 V	COLUMBIA # KL 4 2 32 277 PAF, S18, KLFSA12 SYLVANIA # QTP 2X32T8/UNV PSX
M	SAME AS TYPE 'L' EXCEPT 8' SECTION.	4 FO32/835/XPS 32 WATTS 3500°K	96 W 277 V	COLUMBIA # KL 8 2 32 277 PAF, S18, (2)KLFSA12 SYLVANIA # QTP 2X32T8/UNV PSX
N	1' x 4' SURFACE MOUNTED 2 LAMP WARAROUND FL FIXTURE WITH ACRYLIC PRISMATIC LENS AND SYLVANIA COMBINATION 'XTREME' SERIES HIGH EFFICIENCY ELECTRONIC BALLAST AND LAMPS.	2 FO32/835/XPS 32 WATTS 3500°K	48 W 277 V	COLUMBIA # MWN 4 2 32 277 SYLVANIA # QTP 2X32T8/UNV PSX
O	1' x 4' SURFACE MOUNTED 2 LAMP MINIMUM SECURITY FL FIXTURE WITH EM BATTERY PACK AND SYLVANIA COMBINATION 'XTREME' SERIES HIGH EFFICIENCY ELECTRONIC BALLAST AND LAMPS. PROVIDE PL9 OPTION FOR FIXTURES NOTED WITH 'NL' ON PLAN.	2 FO32/835/XPS 32 WATTS 3500°K	48 W 277 V	MORLITE # SHS 14 232 2/F F2 EMG (PL9) 277 SYLVANIA # QTP 2X32T8/UNV PSX
P	2' x 4' SURFACE MOUNTED 2 LAMP MINIMUM SECURITY FL FIXTURE WITH EM BATTERY PACK AND SYLVANIA COMBINATION 'XTREME' SERIES HIGH EFFICIENCY ELECTRONIC BALLAST AND LAMPS. PROVIDE PL9 OPTION FOR FIXTURES NOTED WITH 'NL' ON PLAN.	4 FO32/835/XPS 32 WATTS 3500°K	96 W 120 V	MORLITE # SHS 24 432 2/F F2 EMG (PL9) 277 SYLVANIA #(2) QTP 2X32T8/UNV PSX
Q	4' SURFACE MOUNTED 2 LAMP INDUSTRIAL FL STRIP WITH SILVANIA COMBINATION 'XTREME' SERIES HIGH EFFICIENCY ELECTRONIC BALLAST AND LAMPS.	2 FO32/835/XPS 32 WATTS 3500°K	48 W 277V	COLUMBIA # CS 4 2 32 277 PAF SILVANIA # QTP 2X32T8/UNV PSX
Q1	SAME AS TYPE 'Q' EXCEPT WITH WIRE GUARD.	2 FO32/835/XPS 32 WATTS 3500°K	48 W 277V	COLUMBIA # CS 4 2 32 277 PAF CSWGH SYLVANIA # QTP 2X32T8/UNV PSX
Q2	SAME AS TYPE 'Q' EXCEPT WITH CHAIN HANGER ASSEMBLY.	2 FO32/835/XPS 32 WATTS 3500°K	48 W 277V	COLUMBIA # CS 4 2 32 277 PAF CSHC SYLVANIA # QTP 2X32T8/UNV PSX
R	SAME AS TYPE 'Q' EXCEPT 8'	4 FO32/835/XPS 32 WATTS 3500°K	96 W 277 V	COLUMBIA # CS 8 2 32 277 PAF SYLVANIA # QTP 2X32T8/UNV PSX
S	WALL MOUNTED HIGH SECURITY CORRIDOR LIGHTS WITH RED FILTER KIT. INSTALLED AS 'IN USE' INDICATOR LIGHT PER PLAN.	-	- W 24 V	DUKANE # J1403-24 438-134 RACO # 696 (1)
T	TRIANGULAR CORNER MOUNT 2 LAMP FL, 4' SECTION, WITH SYLVANIA COMBINATION 'XTREME' SERIES HIGH EFFICIENCY ELECTRONIC BALLAST AND LAMPS.	2 FO32/835/XPS 32 WATTS 3500°K	48 W 277 V	ALKCO # 8542 277 SYLVANIA # QTP 2X32T8/UNV PSX
U	COVE/SOFFIT MOUNTED 1 LAMP FL STAGGERED STRIP WITH ELECTRONIC BALLAST, 2', 3', OR 4' SECTION.	1 FO17, (25) OR (32)/835/XP 3500°K	32W/4' 277 V	COLUMBIA # SS4 1 32 EB8 277 PAF
V	MODULAR UNDERCABINET FL FIXTURE WITH SOLID FRONT AND SYLVANIA COMBINATION 'XTREME' SERIES HIGH EFFICIENCY ELECTRONIC BALLAST AND LAMPS.	1 FO32/835/XPS 32 WATTS 3500°K	25 W 277 V	ALKCO LINCS SERIES # SFLINCS150-048 277ECB SYLVANIA #QTP 1X32T8/UNIV PSX
V2	SAME AS TYPE 'V' EXCEPT WITH 5000?K LAMPS.	1 FO32/850/XPS 32 WATTS 5000°K	32 W 277 V	ALKCO LINCS SERIES # SFLINCS150-048 277ECB

* FIXTURE NOTED WITH 'NL' ON FLOOR PLANS SHALL BE PROVIDE WITH FL FLUORESCENT NIGHT LIGHT

INTERIOR LUMINAIRE SCHEDULE

TYPE	DESCRIPTION:	LAMP:	LOAD:	MANUFACTURER:
W	SEMI-RECESSED ADJUSTABLE PATTERN AND FRAMING PROJECTOR WITH FULL COLOR GOBO LENS OF POLICE BADGE/LOGO. ARTWORK TO BE PROVIDED BY CLIENT.	1 75W 12V MR16 EYJ FLOOD	75 W 277 V	TIMES SQUARE # MR75R 277V ROSCO # SPECTRUMGOBO - FULL COLOR, CUSTOM ART
X	ALCOVE MOUNTED 2 LAMP FL STAGGERED STRIP WITH SYLVANIA DIMMING BALLAST.	2 FO32/835/XPS 32 WATTS 3500°K	67 W 277 V	COLUMBIA # SS4 2 32 277 PAF SYLVANIA # QTP 2X32T8/277-DIM5
Y	SAME AS TYPE 'H' EXCEPT WITH LUTRON DIMMING BALLAST.	1 CF32DT/E/835 32 WATTS 3500°K	35 W 277 V	COLUMBIA # CFT632HEB-STF602H 277V SS LUTRON-# FDB CT32 277 1
Z	RECESSED ADJUSTABLE MULTI-LAMP ACCENT LIGHT WITH 2 PAR38 60? WIDE FLOOD CERAMIC METAL HALIDE LAMPS. ELECTRONIC BALLAST AND RECTANGULAR HOUSING. LAMPS AIMED TO DOWNLIGHT POSITION.	2 MCP/PAR38/WFL 70 WATTS	158 W 277 V	PRESCOLITE #MLLEB70MHPAR2 277 TFL02
AA	SURFACE MOUNT HEAVY DUTY FL STRIP, 4' SECTION WITH 1 LAMPS. SYLVANIA COMBINATION 'XTREME' HIGH EFFICIENCY ELECTRONIC BALLAST AND LAMPS.	1 FO32/835/XPS 32 WATTS 3500°K	25 W/4' 277 V	COLUMBIA # CH 4 1 32 277 PAF SYLVANIA # QTP 1X32T8/277-PSN
AB	SURFACE MOUNT HEAVY DUTY FL STRIP, 8' SECTION WITH 2 LAMPS. SYLVANIA COMBINATION 'XTREME' HIGH EFFICIENCY ELECTRONIC BALLAST AND LAMPS.	2 FO32/835/XPS 32 WATTS 3500°K	48 W/8' 277 V	COLUMBIA # CH 8 2 32 277 PAF SYLVANIA # QTP 2X32T8/UNV PSX
AC	6" RECESSED CFL DOWNLIGHT WITH REGRESSED LENS AND SYLVANIA ELECTRONIC BALLAST.	1 CF32DT/E/835 32 WATTS 3500°K	35 W 277 V	KIRLIN # RR80622-46 SYLVANIA # QTP 1X32CF/277
AD	CUSTOM 'LIGHT STRUCTURE' USING HERA HIGHLIGHT T5 MODULE. SEE DETAIL-LIGHTING SHEET E4.3 FOR MORE INFORMATION.	1 PER 4' F28T5/835 28 WATTS 3500°K	31 W/4' 277 V	HERA HIGHLITE SERIES (PER 4' MODULE) #HL42 277 (2) HLMS11 MODIFIED (2) HLE
AE	RECESSED 1' x 2' LONG TT CFL WALL WASH FIXTURE WITH FLANGE MOUNTING AND SYLVANIA ELECTRONIC BALLAST.	1 FT40DL/835 40 WATTS 3500°K	37 W 277 V	ALKCO # FWW 140 F 277 SYLVANIA # QTP 1X40TT5/277-PSN
AF	RECESSED 1' x 4' RECESSED DIRECT/INDIRECT 2 LAMP FL FIXTURE WITH SYLVANIA COMBINATION 'XTREME' SERIES HIGH ELECTRONIC BALLAST AND LAMPS.	2 FO32/835/XPS 32 WATTS 3500°K	48 W 277 V	ZUMTOBEL STAFF # RC3114 2328 P W 2 SYLVANIA # QTP 2X32T8/UNV PSX
AG	WET LOCATION RATED, WALL MOUNTED, LOW PROFILE FL FIXTURE WITH SYLVANIA COMBINATION 'XTREME' SERIES HIGH EFFICIENCY ELECTRONIC BALLAST AND LAMPS.	2 F032/835/XPS 32 WATTS 3500°K	48 W 277 V	MORLITE # LPL2000 232 FI WL 277 SILVANIA # QTP 2X32T8/UNV PSX
AH	NOT USED			
AJ	8" RECESSED CFL DOWNLIGHT WITH CROSS BAFFLE AND ELECTRONIC BALLAST.	1 CF32DT/E/835 32 WATTS 3500°K	35 W 277 V	PRESCOLITE # CFCB832THEB STCB8ACL SS SYLVANIA # QTP 1X32CF/277
AK	6" FRESNEL 500W FLOODLIGHT.	1 500 500 WATTS	500 W 120 V	STRAND LIGHTING POLARIS # 26281
AL	6" FRESNEL 200W FLOODLIGHT.	1 200 200 WATTS	200 W 120 V	STRAND LIGHTING POLARIS # 26281
AM	6" ROUND PENDANT MOUNTED FIXTURE WITH CLEAR AND FROSTED GLASS AND INCANDESCENT LAMP.	1 E14/R50 40 WATTS	40 W 120 V	FLOS # FLUCSIA 1
AN	SAME AS TYPE 'J' EXCEPT DIFFERENT OPTIC.	1 CF32DT/E/835 32 WATTS 3500°K	35 W 277 V	WILA # 121 32 277 SA CC06 SYLVANIA # QTP 1X32CF/277
AO	4' OR 8' SECTION WALL MOUNTED INDIRECT 2 LAMP FL FIXTURE WITH SYLVANIA COMBINATION 'XTREME' HIGH EFFICIENCY ELECTRONIC BALLAST AND LAMPS.	2/4' FO32/835/XPS 32 WATTS 3500°K	48 W/4' 277 V	ALERA # WMP 2T8 PERF WM 277 MW SYLVANIA # QTP 2X32T8/UNV PSX
AP	4' SECTION DIRECT/INDIRECT 2 LAMP FL PENDANT WITH EXTRUDED ALUMINUM HOUSING AND SYLVANIA ELECTRONIC DIMMING BALLAST.	2 FO32/835/XPS 32 WATTS 3500°K	67 W 277 V	ZUMTOBEL STAFF # VMS 2328 4 T L/2 PI SYLVANIA # QTP 2X32T8/277-DIM5
AQ	NOT USED			
AR	NOT USED			
AS	SURFACE MOUNTED CFL WITH WHITE FLAT CANOPY AND OPAL FROSTED GLASS SHADE. SYLVANIA ELECTRONIC BALLAST.	1 CF32DT/E/835 32 WATTS 3500°K	35 W 277 V	DELRAY LIGHTING # 2291 W O 32 2 E SYLVANIA # QTP 1X32CF/277
AT	SAME AS TYPE 'B' EXCEPT WITH SYLVANIA DIMMING BALLAST.	2 FO32/835/XPS 32 WATTS 3500°K	67 W 277V	COLUMBIA # STR 24 2 32 G MPO 277 SYLVANIA # QTP 2X32T8/277-DIM5
AU	6" RECESSED CFL WALL WASH WITH SYLVANIA ELECTRONIC BALLAST.	1 CF32DT/E/835 32 WATTS 3500°K	35 W 277 V	COLUMBIA # CFT632HEB-STF602HWW 277V SS SYLVANIA # QTP 1X32CF/277
AV	7-1/2" RECESSED CFL WALL WASH WITH WHITE INNER REFLECTOR WITH LUTRON DIMMING BALLAST.	1 CF32DT/E/835 32 WATTS 3500°K	35 W 277 V	KIRLIN # RR80754-30-44-99 LUTRON - # FDB CF32 277 1
AW	SAME AS TYPE 'B3' EXCEPT WITH SYLVANIA ELECTRONIC DIMMING BALLAST.	3 FO32/835/XPS 32 WATTS 3500°K	92 W 277V	COLUMBIA # P2 24 2 32 LD 12 S 277 SYLVANIA # QTP 3X32T8/277-DIM5
AX	150W SPOT LIGHT WITH COLORED INDESCENT LAMP.	1 150 150 WATTS	150 W 120 V	-
AY	1' x 4' RECESSED 2 LAMP MEDIUM SECURITY FL FIXTURE WITH EM BATTERY PACK AND SYLVANIA COMBINATION 'XTREME' SERIES HIGH EFFICIENCY ELECTRONIC BALLAST AND LAMPS. PROVIDE PL9 OPTION FOR FIXTURES NOTED WITH 'NL' ON PLAN.	2 FO32/835/XPS 32 WATTS 3500°K	48 W 120 V	MORLITE # FH M 14 232 3/F F2 PF EMG PL9* 120 SILVANIA # QTP 2X32T8/UNV PSX

INTERIOR LUMINAIRE SCHEDULE

TYPE	DESCRIPTION:	LAMP:	LOAD:	MANUFACTURER:
AZ	4' WALL MOUNTED LENSED FL TASK LIGHT WITH BULLET NOSE SOLID FRONT AND WITH SYLVANIA COMBINATION 'XTREME' SERIES HIGH EFFICIENCY ELECTRONIC BALLAST AND LAMPS.	2 FO32/835/XPS 32 WATTS 3500°K	48 W 277 V	ALKCO # BN3146 277 SYLVANIA # QTP 2X32T8/UNIV PSX
BA	SAME AS TYPE 'AE' WITH LUTRON DIMMING BALLAST.	1 FT40DL/835 40 WATTS 3500°K	43 W 277 V	ALKCO # FWW 140 F 277 LUTRON # FDB-2227-277-1
BB	8" ROUND RECESSED COMPACT FLUORESCENT FIXTURE WITH CROSS BAFFLE AND LUTRON DIMMING BALLAST.	2 CF32DT/E/835 32 WATTS 3500°K	70 W 277 V	PRESCOLITE # CFCB832DTHEB STCB8ACL LUTRON #FDB
BC	8' SECTION SUSPENDED 2 LAMP INDUSTRIAL FL STRIP WITH ACRYLIC SHIELDING AND DIMMING BALLAST.	4 FO32/835/XPS 32 WATTS 3500°K	120 W/8' 120 V	COLUMBIA # KL8 232 277 PAF S18 (2)KLFSA12 SYLVANIA # QTP 4X32T8/120-DIM10
BD	4' SECTION SURFACE MOUNTED COVE LIGHT WITH 2 LONG TT FL LAMPS AND SYLVANIA ELECTRONIC BALLAST.	2 FT40DL/835 40 WATTS 3500°K	73 W/4' 277 V	COLUMBIA # COV4 140TT 277 SYLVANIA # QTP 2X40TT5/277PSN
BE	INC QUARTER SPHERE WALL SCONCE	1 100W A19 100 WATTS	100 W 120 V	PRESCOLITE # 4500
BF	NOT USED			
BG	SAME AS TYPE 'AE' EXCEPT 4' LONG AND WITH LUTRON DIMMING BALLASTS.	2 FT40DL/835/ 40 WATTS 3500°K	86 W 277V	ALKCO # FWW 240 F 277 LUTRON # FDB-2227-277-1
BH	SAME AS TYPE 'AO' EXCEPT WITH 5000?K LAMPS.	2/4' FO32/850/XPS 32 WATTS 5000°K	48 W/4' 277 V	ALERA # WMP 2T8 PERF WM 277 MW SYLVANIA # QTP 2X32T8/UNV PSX
BJ	SAME AS TYPE 'AZ' EXCEPT WITH 5000?K LAMPS	2 FO32/850/XPS 32 WATTS 5000°K	67 W 277 V	ALKCO # BN3146 277 SYLVANIA # QTP 2X32T8/277-DIM5
BK	SURFACE MOUNT KEYLESS INCANDESCENT WITH WIRE GUARD. INSTALL IN ELEVATOR PIT.	1 XX WATTS	14.7 W 120 V	DUALLITE # N4X71-A3(277V)
BL	SAME AS TYPE 'BD' EXCEPT WITH 2 T8 FL LAMPS AND SYLVANIA DIMMING BALLAST.	2 F032/835/ 32 WATTS 3500°K	67 W 277 V	COLUMBIA # COV4 232 277 SYLVANIA # QTP 2X32/277 DIM5
BM	4" RECESSED LV ADJUSTABLE ACCENT LIGHT WITH BEAM ELONGATOR LENS. OVAL SLOT TRIM RING WITH 45°V AND 360°H ROTATION VERTICAL AIMING LOCK. ZET FINISH.	1 MR-16 75 WATTS	75 W 277 V	PRECOLITE LVH4-277V- LVID-LV3Z
EL	ELEGANT LED EXIT SIGN, EDGE-LIT CLEAR MOLDED ACRYLIC WITH GREEN LETTERS, ARROWS, MOUNTED AS SHOWN ON PLANS.	-	LED'S W/UNIT	DUALLITE # LE C D G - W EI TR
EM	WEATHERPROOF EMERGENCY LIGHT FIXTURE WITH INCANDESCENT PAR36 LAMPS AND SELF-TESTING ELECTRONICS.	2 7.2 WATTS	14.7 W 277 V	DUALLITE # N4X71-A3(277V)
ER	WEATHERPROOF EMERGENCY REMOTE HEAD WITH INCANDESCENT PAR36 LAMPS.	1 7.2 WATTS	7.2 W 277 V	DUALLITE # NAX0607 MP100
EW	WEATHERPROOF EXIT SIGN FIXTURE WITH GREEN LETTERS, ARROWS, WHITE FACE AND SELF-TESTING ELECTRONICS. MOUNTED AS SHOWN ON PLANS.	-	LED'S W/UNIT	DUALLITE # LN4X G W E I TR
EX	LED EXIT SIGN FIXTURE WITH GREEN LETTERS, ARROWS, WHITE FACE. MOUNTED AS SHOWN ON PLANS.	-	LED'S W/UNIT	DUALLITE # LC G W E I TR

EXTERIOR LUMINAIRE SCHEDULE

TYPE	DESCRIPTION:	LAMP:	LOAD:	MANUFACTURER:
SA	FULLY SHIELD CUTOFF HIGH PRESSURE SODIUM FIXTURE WITH LONG CURVED ARM AND FORWARDTHROW DISTRIBUTION ON 24 FT. HIGH, 5" ROUND ALUMINUM POLE. FINISH TO BE SELECTED.	1 ED-17 HPS 250 WATTS	305 W 277 V	ARCHITECTURAL AREA LIGHTING - FLEX SERIES # FH3 250HPS HSS LC5 PR5 5R24-.188
SB	WET LOCATION RECESSED LED MARKER LIGHT. 2.76" X 4.72" WITH 28 BLUE LEDS. INTEGRAL 120V TRANSFORMER. STAINLESS STEEL TRIM AND TEMPERED GLASS DIFFUSER. THROUGH WIRE BACK BOX.	28 AMBER LED	5 W 120 V	LOUIS POULSEN DEX LED BLUE 120 CLEAR
SC	WALL MOUNTED CUTOFF HIGH PRESSURE SODIUM FIXTURE WITH LONG CURVED ARM AND TYPE 3 DISTRIBUTION. FINISH TO BE SELECTED.	1 ED-17 HPS 150 WATTS	190 W 277 V	ARCHITECTURAL AREA LIGHTING - FLEX SERIES # FH2 150HPS RCK WLC
SD	11" SQUARE RECESSED CFL LENSED DOWNLIGHT WITH ELECTRONIC BALLAST.	2 CF32DT/E/835 32 WATTS 3500°K	72 W 277 V	KIRLIN # RS91166 26 46 58
SE	3" DIA. SURFACE MOUNTED MR16 FLOOD LIGHT WITH INTEGRATED TRANSFOMER AND TEMPERED GLASS LENS. MOUNT TO CAST ALUMINUM CANOPY. BLACK SATIN FINISH.	1 MR-16 75 WATTS	75 W 120 V	B-K LIGHTING # RA 33 BLP 9 11 C # BC4BLP
SF	SAME AS TYPE 'SE' EXCEPT WITH 'A' STYLE CAP AND ABOVE GRADE MOUNTING.	1 MR-16 75 WATTS	75 W 120 V	B-K LIGHTING # RA 33 BLP 9 A
SG	7" ROUND RECESSED CFL STEP LIGHT WITH LINEAR SPREAD LENS AND "GLOW" OPTION. MATTE ALUMINUM POWDER COAT FINISH.	1 CF9 TT 9 WATTS	11 W 277 V	ACHITECTURAL AREA LIGHTING # ASL7-RD-LS MAL LV50 GLOW
SH	WALL MOUNTED CFL FIXTURE WITH SHORT CURVED ARM, SOLID RING ACCESSORY, AND UPLIGHT & DOWNLIGHT DISTRIBUITON. FINISH TO BE SELECTED.	1 CF42DT/E/835 42 WATTS 3500°K	46 W 277 V	ARCHITECTURAL AREA LIGHTING - MINI FLEX # FMSC CF SRU SRL
SJ	WALL MOUNTED CFL FIXTURE WITH SHORT CURVED ARM, SOLID RING ACCESSORY, AND UPLIGHT DISTRIBUITON. FINISH TO BE SELECTED.	1 CF42DT/E/835 42 WATTS 3500°K	46 W 277 V	ARCHITECTURAL AREA LIGHTING - MINI FLEX # FMSC CF SRU
SK	WALL MOUNTED CFL FIXTURE WITH LONG CURVED ARM AND EXTENSION, SOLID RING ACCESSORY, AND DOWNLIGHT DISTRIBUITON. FINISH TO BE SELECTED.	1 CF42DT/E/835 42 WATTS 3500°K	46 W 277 V	ARCHITECTURAL AREA LIGHTING - MINI FLEX # FMLCX CF SRL
SL	WALL MOUNTED WET LOCATION LINEAR FL FIXTURE WITH LEXAN POLYCARBONATE DIFFUSER AND ADJUSTABLE YOKE MOUNTING. ORIENTED TO BACKLIGHT GLASS PANELS.	1 F21T5/835 21 WATTS 3500°K	27 W 277 V	EXTERIEUR VERT LIGHTING # LINEOS XIT5.1 277V # ADJUSTABLE YOKE (2)
SM	SINGLE ROW BLUE LED STRIP LIGHT, CONTINUOUS ROW WITH EXTERIOR BRUSHED ALUMINUM EXTRUSION.	18/1' AMBER LED	-W -V	BOCA FLASHER # BF-COOD

ILA ZAMMIT ENGINEERING GROUP
Consulting Electrical Engineers
3625 Ruffin Rd., Suite 300
San Diego, CA. 92123
(858) 279-0242 - FAX (858) 279-0711

REGISTERED PROFESSIONAL ENGINEER
STONE L. FROBERG
No. 5950
Exp. 9/30/02
ELECTRICAL
STATE OF CALIFORNIA

CARRIER JOHNSON
ARCHITECTURE
INTERIOR DESIGN
PLANNING

GORDON R. CARRIER AIA
MICHAEL C. JOHNSON AIA

WILLIAM C. BOCKEN AIA
DEBORAH P. ELLIOTT IIDA

2600 MICHELSON DRIVE
SUITE 400
IRVINE, CALIFORNIA
92612

TEL 949 955-2353
FAX 949 955-2377

1301 THIRD AVENUE
SAN DIEGO, CALIFORNIA
92101

TEL 619 239-2353
FAX 619 239-6227

ONTARIO POLICE DEPARTMENT HEADQUARTERS
ONTARIO, CA

ISSUES:

DIRECTORY/FILE NUMBER: J: /035-050

XREF'S DRAWINGS:

PROJECT NUMBER: 035-050

DRAWN BY: ILAZ-CADD
CHECKED BY: SF

DATE:

SCALE: NO SCALE

TITLE: ABBREVIATIONS AND SCHEDULES

DRAWING NO: E1.2

SHEET NOTES:

(1) PROVIDE 277/24V - 25VA TRANSFORMER

RECORD DOCUMENTS

THESE DOCUMENTS RELEASED BY CARRIER JOHNSON FOR USE AS RECORD DOCUMENTS WILL SHOW THE REPORTED LOCATION OF THE WORK AND SIGNIFICANT CHANGES MADE DURING THE CONSTRICTION PROCESS, AND ARE BASED ON UNVERIFIED INFORMATION PROVIDED BY THE CONTRACTOR AND OTHER PARTIES WHICH WILL BE ASSUMED RELIABLE. CARRIER JOHNSON CANNOT AND DOES NOT WARRANT THE ACCURACY AND/OR COMPLETENESS OF THIS INFORMATION AND SHALL NOT BE RESPONSIBLE FOR ANY ERRORS OR OMISSIONS WHICH MAY BE INCORPORATED THEREIN AS A RESULT. FUTURE CONSTRUCTION PLANNING MUST INCLUDE FIELD CONFIRMATION OF EXISTING CONDITIONS.

2nd Floor. Dispatch center

2nd Floor

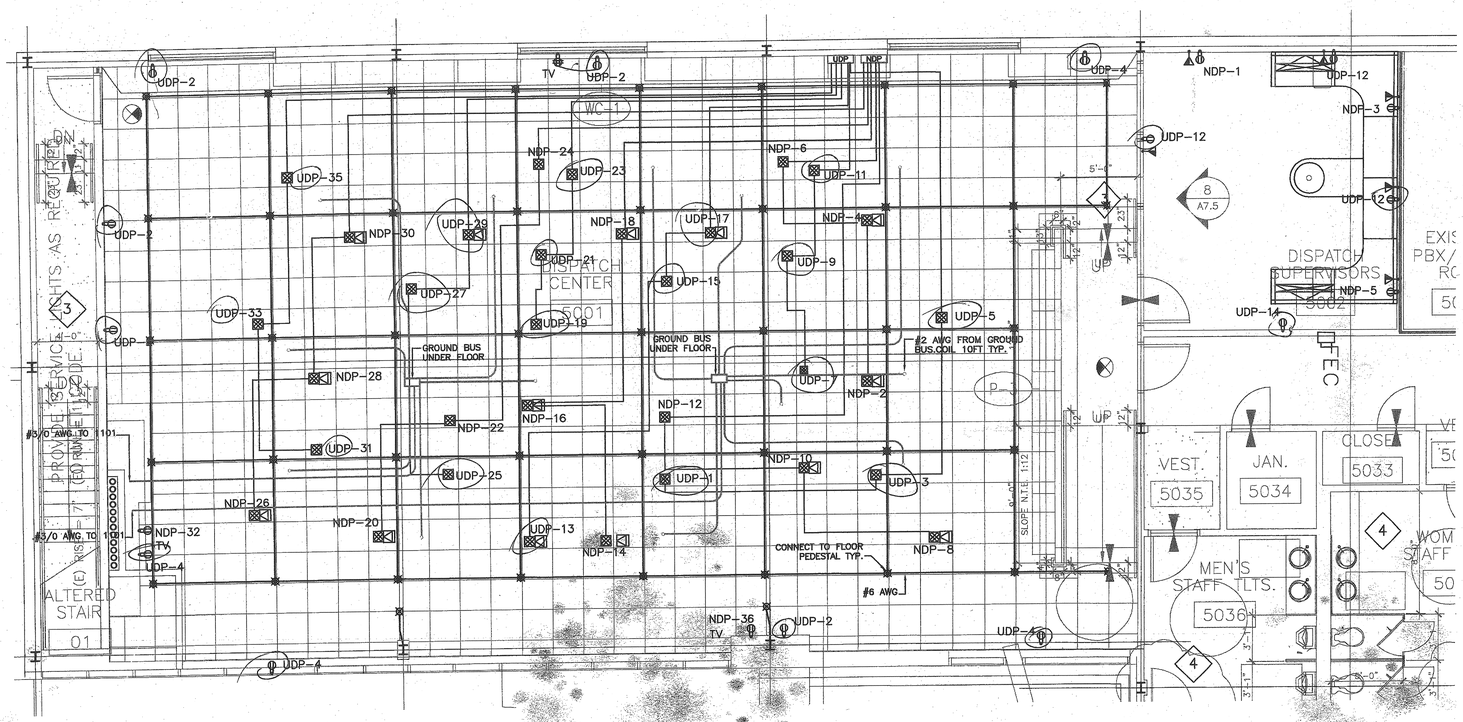

1st Floor (IT) Computer Room

MDF

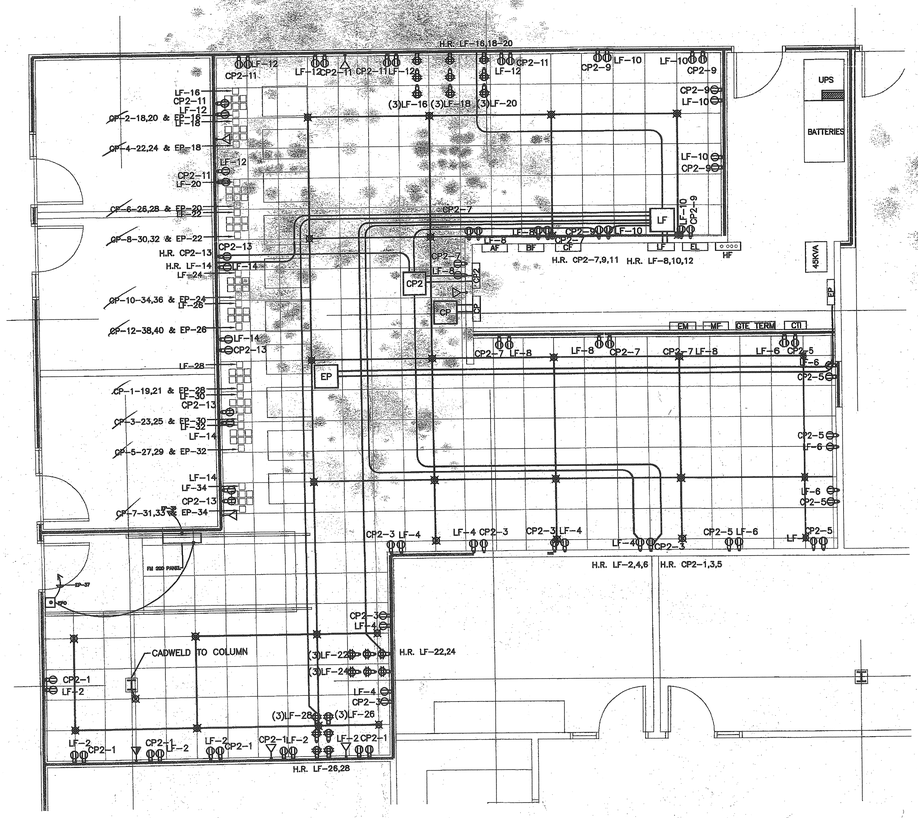

MAKE UP BOX (PANEL LF)
20A DOUBLE DUPLEX (TYP 3)
20A L6-20R (CP)
30A L5-30R (EP)
20A DUPLEX (CP)
MAKE UP BOX (PANELS CP & EP)

MORROW MEADOWS CORP.

RECORD DRAWING
DATE 1/24/04
JOB NUMBER 631027

COORDINATION

	COORDINATION	SIGNATURE	DATE
GENERAL CONTRACTOR			
MECHANICAL (DUCT)			
MECHANICAL (PIPE)			
PLUMBING			
ELECTRICAL			
SPRINKLER			

	DESCRIPTION	BY	DATE
F.			
E.			
D.			
C.			
B.			
A.	RFI's		

Morrow-Meadows Corp.
ELECTRICAL CONTRACTORS AND ENGINEERS
231 Benton Court
City of Industry, Ca. 91789
Telephone: (909) 598-7700
Fax: (909) 598-3530
www.MORROW-MEADOWS.com
License #: 238813-C10

RECEIVED
MAR 1 0 2004
CITY CLERK'S DEPT.
SANTA ANA

POWER & GROUNDING

ONTARIO
POLICE HEADQUARTERS
2534 S. ARCHIBALD AVE. ONTARIO, CA 91761

title:	
date: 12/20/03	by: NO
scale: AS NOTED	chk:
job#: 631027	
cad file: Room_Layout.dwg	
drawing no: MMC E1.5 & 1.7	

⑦ SEQUENCE OF OPERATION FOR TRAILER MOUNTED STANDBY GENERATOR

TO BE USED ONLY WHEN NORMAL UTILITY SERVICE HAS BEEN INTERRUPTED.

1. TERMINATE FEEDER PROVIDED WITH TRAILER MOUNTED STANDBY GENERATOR AT LOCKED-OFF KIRK KEY INTERLOCKED 1000A, 3-P ENCLOSED CIRCUIT BREAKER LUGS.
2. OPEN AND LOCK-OFF SWITCH "P18" SERVING 800A ATS.
3. OPEN AND LOCK-OFF SWITCH "P10" SERVING 150A ATS.
4. OPEN AND KIRK KEY LOCK-OFF MAIN 3000A CIRCUIT BREAKER. REMOVE KEY FOR #5.
5. UNLOCK KIRK KEY 1000A, 3P ENCLOSED BREAKER AND CLOSE FEEDER CIRCUIT BREAKER TO TRAILER MOUNTED EMERGENCY GENERATOR.

SIGNAGE DETAIL

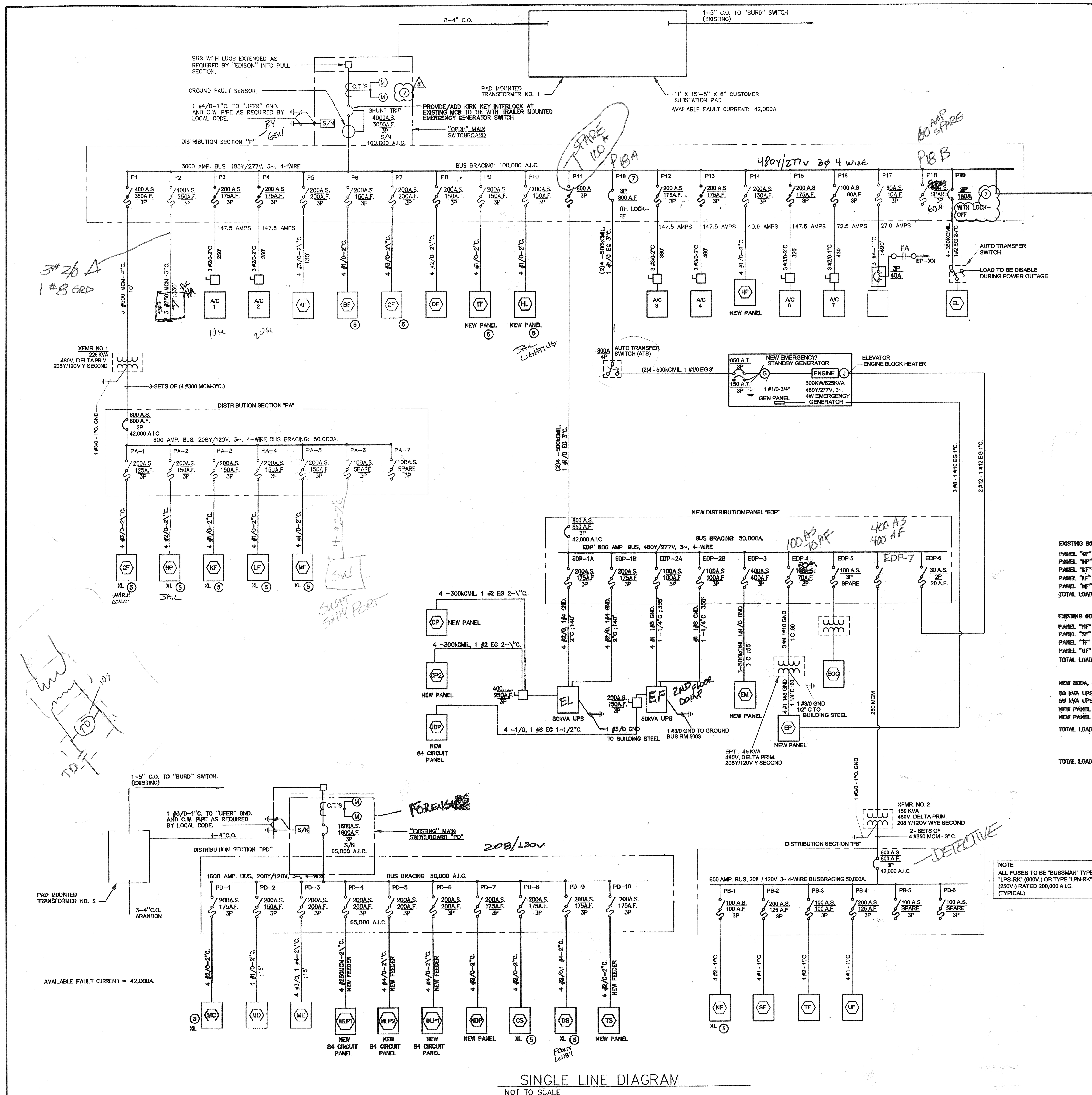

SINGLE LINE DIAGRAM

NOT TO SCALE

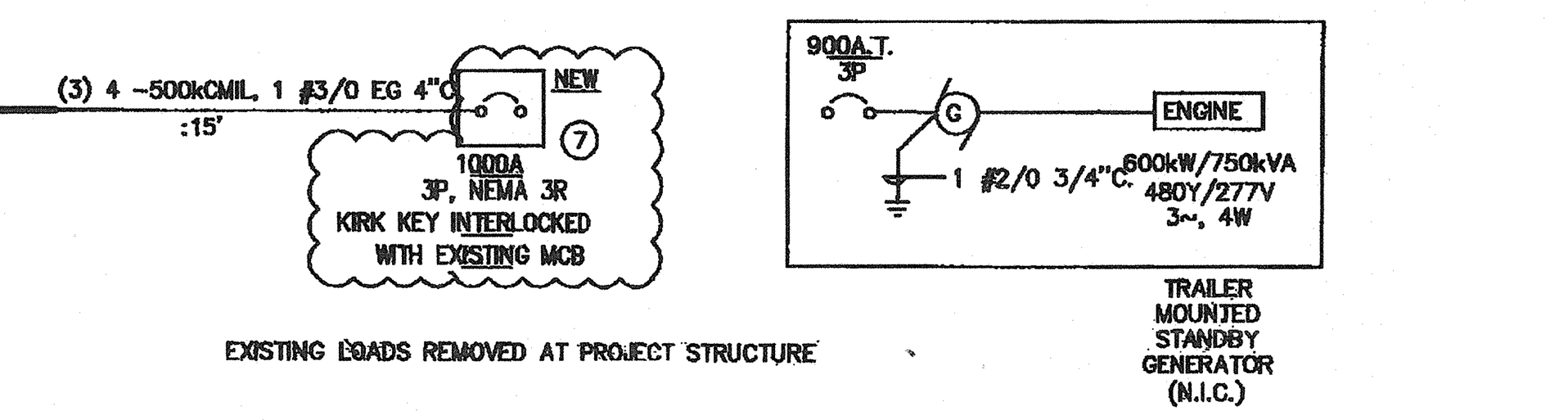

EXISTING LOADS REMOVED AT PROJECT STRUCTURE

EXISTING 3000A, 480Y/277V MAIN SWITCHBOARD – 908.0kVA (1092.7A @ 480Y/277V) (INCLUDES "PA" AND "PB")
EXISTING 800A, 208Y/120V DISTRIBUTION SECTION "PA" – 185.5kVA (520.9A @ 208Y/120V)
EXISTING 600A, 208Y/120V DISTRIBUTION SECTION "PB" – 113.6kVA (315.5A @ 208Y/120V)

EXISTING 1200A DISTRIBUTION SECTION – 81.6kVA (226.8A @ 208Y/120V)
EXISTING DISTRIBUTION SECTION "PC" – 225.0kVA (625.1A @ 208Y/120V)

EXISTING DISTRIBUTION SECTION "PD" – 458kVA (1272.5A @ 208Y/120V)

NEW LOADS

EXISTING 3000A, 480Y/277V MAIN SWITCHBOARD
PANEL "AF" – NOT USED
PANEL "BF" – 69.2kVA (83.3A @ 480Y/277V)
PANEL "CF" – 17.4kVA (20.9A @ 480Y/277V)
PANEL "DF" – 14.4kVA (17.3A @ 480Y/277V)
PANEL "EF" – 75.6kVA (91.0A @ 480Y/277V)
PANEL "HL" – 8.4kVA (10.1A @ 480Y/277V)
PANEL "EL" – 45.6kVA (54.9A @ 480Y/277V)

EXISTING 3000A, 480Y/277V MAIN SWITCHBOARD WILL HAVE THE FOLLOWING EXISTING LOADS WHICH ARE TO REMAIN (MECHANICAL AND ELEVATOR) – 795.7kVA (957.5A @ 480Y/277V)

NEW 208Y/120V LOADS WHICH ARE BEING ADDED – 195.1kVA (234.8A @ 480Y/277V)

TOTAL LOAD AT EXISTING 3000A SWITCHBOARD DUE TO REMODEL – 1261.0kVA (1517.4A @ 480Y/277V)

EXISTING 800A, 208Y/120V DISTRIBUTION SECTION "PA"
PANEL "GF" – 21.3kVA (59.2A @ 208Y/120V)
PANEL "HP" – 23.6kVA (65.6A @ 208Y/120V)
PANEL "KF" – 8.2kVA (22.8A @ 208Y/120V)
PANEL "LF" – 25.1kVA (69.7A @ 208Y/120V)
PANEL "MF" – 23kVA 63.9A @ 208Y/120V)
TOTAL LOAD AT "PA" = 101.2kVA (281A @ 208Y/120V)

EXISTING 600A, 208Y/120V DISTRIBUTION SECTION "PB"
PANEL "NF" – 16.7kVA (46.4A @ 208Y/120V)
PANEL "SF" – 28.9kVA (78.6A @ 208Y/120V)
PANEL "TF" – 28.9kVA (78.6A @ 208Y/120V))
PANEL "UF" – 19.3kVA (53.6A @ 208Y/120V)
TOTAL LOAD AT "PB" [illegible]kVA (260.6 @ 208Y/120V)

NEW 800A, 480Y/277V DISTRIBUTION PANEL "EDP"
80 KVA UPS – 80kVA (96.6A @480Y/277V)
50 kVA UPS – 50kVA (60.2A @ 480Y/277V)
NEW PANEL "EM" 273.0kVA (328.5A @ 480Y/277V)
NEW PANEL "EP" 29.8kVA (35.9A @ 480V, 3 PHASE)
TOTAL LOAD AT "EDP" = 432.8kVA + 25% OF "EM" = 501kVA (601.9A @ 480Y/277V)

EXISTING 1600A, 208Y/120V DISTRIBUTION SECTION "PD"
PANEL "MC" 20.5kVA (56.9A @ 208Y/120V)
PANEL "MD" 17.1kVA (47.5A @ 208Y/120V)
PANEL "ME" 4.5kVA (12.5A @ 208Y/120V)
TOTAL LOAD AT "PD" = 42.1kVA (116.9A @ 208Y/120V)

REPLACEMENT 1200A, 208Y/120V SWITCHBOARD "PNE"
PANEL "MLP1" – 36.3kVA (100.8A @ 208Y/120V)
PANEL "MLP2" – 16.9kVA (46.9A @ 208Y/120V)
DISTRIBUTION PANEL "PK" – 124.3kVA (345.3A @ 208Y/120V)
TOTAL LOAD AT "PNE" = 177.5kVA (493.1A @ 208Y/120V)

REPLACEMENT 800A, 208Y/120V DISTRIBUTION SECTION "PK"
PANEL "WLP1" – 21.7kVA (60.3A @208Y/120V)
PANEL "NDP" – 28.7kVA (79.7A @ 208Y/120V)
PANEL "CS" – 22.8kVA (63.3A @ 208Y/120V)
PANEL "DS" – 32.2kVA (89.4A @ 208Y/120V)
PANEL "TS" – 18.9kVA (52.5A @ 208Y/120V)
TOTAL LOAD AT "PK" = 124.3kVA (345.3A @ 208Y/120V)

TOTAL LOAD AT EMERGENCY/STANDBY GENERATOR = 501kVA "EDP" + 45.6kVA "EL" = 546.6kVA (657.8 @ 480Y/277V)

LOAD SUMMARY

NOTES:

1. DISCONNECT AND REMOVE EXISTING 55kW GENERATOR, ONAN AUTOMATIC TRANSFER SWITCH AND ALL ASSOCIATED SECONDARY DISTRIBUTION EQUIPMENT AND CIRCUITING INCLUDING, BUT NOT LIMITED TO, PANELS AND TRANSFORMERS.
2. COORDINATE WITH SERVING UTILITY (SCE) TO DISCONNECT AND REMOVE THREE (3) EXISTING "SCE" METER BASES DISCONNECT EXISTNG "SCE" FEEDER AND REMOVE EXISTING SWITCHBOARD "PNE" AND DISTRIBUTION SECTION "PK".
3. DISCONNECT AND REMOVE EXISTING FEEDERS AND PANELS. PROVIDE NEW FEEDERS AND PANELS. PROVIDE NEW FUSES AT EXISTING SWITCHES.
4. PROVIDE NEW 120VAC (EMERGENCY SOURCE) SHUNT TRIP AT EXISTING ELEVATOR FUSED SWITCH. THIS SHUNT TRIP SHALL TIE INTO THE NEW FIRE ALARM SYSTEM.
5. DISCONNECT EXISTING FEEDER AND BRANCH CIRCUITS FROM EXISTING TO BE REPLACED AND RELOCATED PANELS. EXTEND EXISTING CIRCUITING TO NEW LOCATION OF REPLACEMENT PANEL/S.
6. DISCONNECT EXISTING FEEDER SERVING "AC #5" FROM EXISTING FUSED SWITCH. LABEL EXISTING SWICH "SPARE". PROVIDE NEW FEEDER TO EXISTING TO REMAIN ROOFTOP A.C. #5 FROM NEW EMERGENCY MECHANICAL PANEL "EM".
7. PROVIDE ENGRAVED PLATE PER SPECIFICATIONS FOR THE "SEQUENCE OF OPERATIONS FOR TRAILER MOUNTED STANDBY GENERATOR" OPERATIONS DATA. PROVIDE PANELS AT MAIN SWITCHBOARD FOR MAIN CIRCUIT BREAKER, SWITCHES #10, #18 AND 1000A,3P ENCLOSED CIRCUIT BREAKER WITH KIRK-KEY INTERLOCK PROVISIONS. TEXT OF THIS PLATE SHALL BE AS INDICATED IN DETAIL ON THIS SHEET.
8. PROVIDE 120VAC SHUNT TRIP TO BE OPERATED BY THE "EPO" SWITCH ADJACENT TO DOOR TO ROOM AND/OR DISCHARGE OF FIRE SUPPRESSION AGENT IN ROOM/S.

MORROW MEADOWS CORP.
RECORD DRAWING
DATE 12-08-03
JOB NUMBER 631027

COORDINATION

COORDINATION	SIGNATURE	DATE
GENERAL CONTRACTOR		
MECHANICAL (DUCT)		
MECHANICAL (PIPE)		
PLUMBING		
ELECTRICAL		
SPRINKLER		

REV.	DATE	DESCRIPTION	BY
A			
B			
C			
D			
E			
F			

MORROW-MEADOWS CORP. Group of Companies

Morrow-Meadows Corp.
ELECTRICAL CONTRACTORS AND ENGINEERS
231 Benton Court
City of Industry, Ca. 91789
Telephone: (909) 598-7700
Fax: (909) 598-3007
www.MORROW-MEADOWS.com
License #: 230813-C10

TITLE: ONE LINE

ONTARIO
POLICE HEADQUARTERS
2534 S. ARCHIBALD AVE. ONTARIO, CA 91761

date: 11/24/03	by: NO
scale: NONE	chk:
job#: 631027	
cad file: OneLine.dwg	
drawing no: MM-E16	

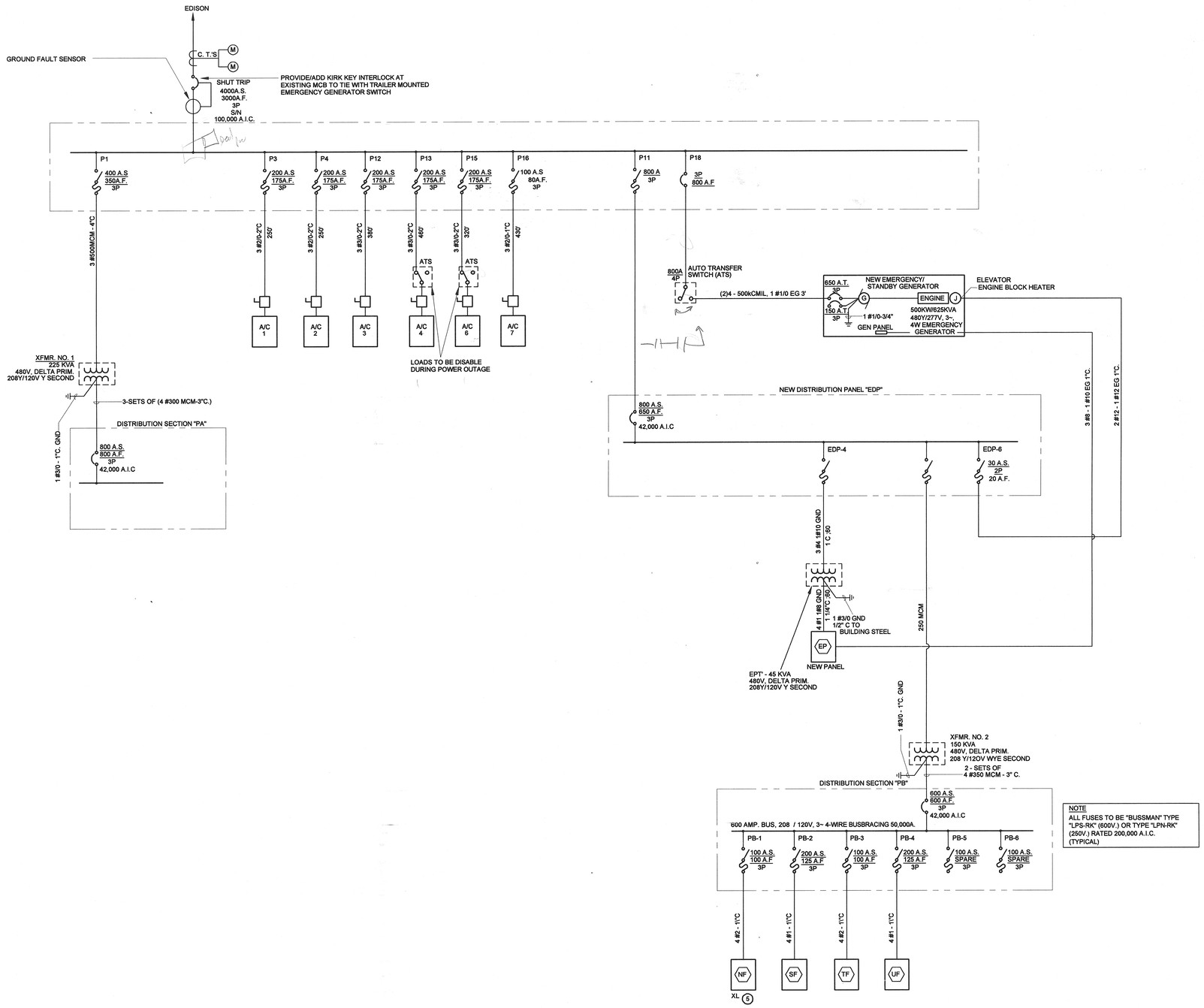

REVISIONS

PROJECT:

ENGINEERING SOLUTIONS
Roberto Arellano
12735 Golden Leaf Dr
Rancho Cucomonga, CA 91739
(909) 697-6965

DRAWN

DATE

SCALE

JOB NO.

SHEET

of

RLOCK AT
TRAILER MOUNTED
WITCH

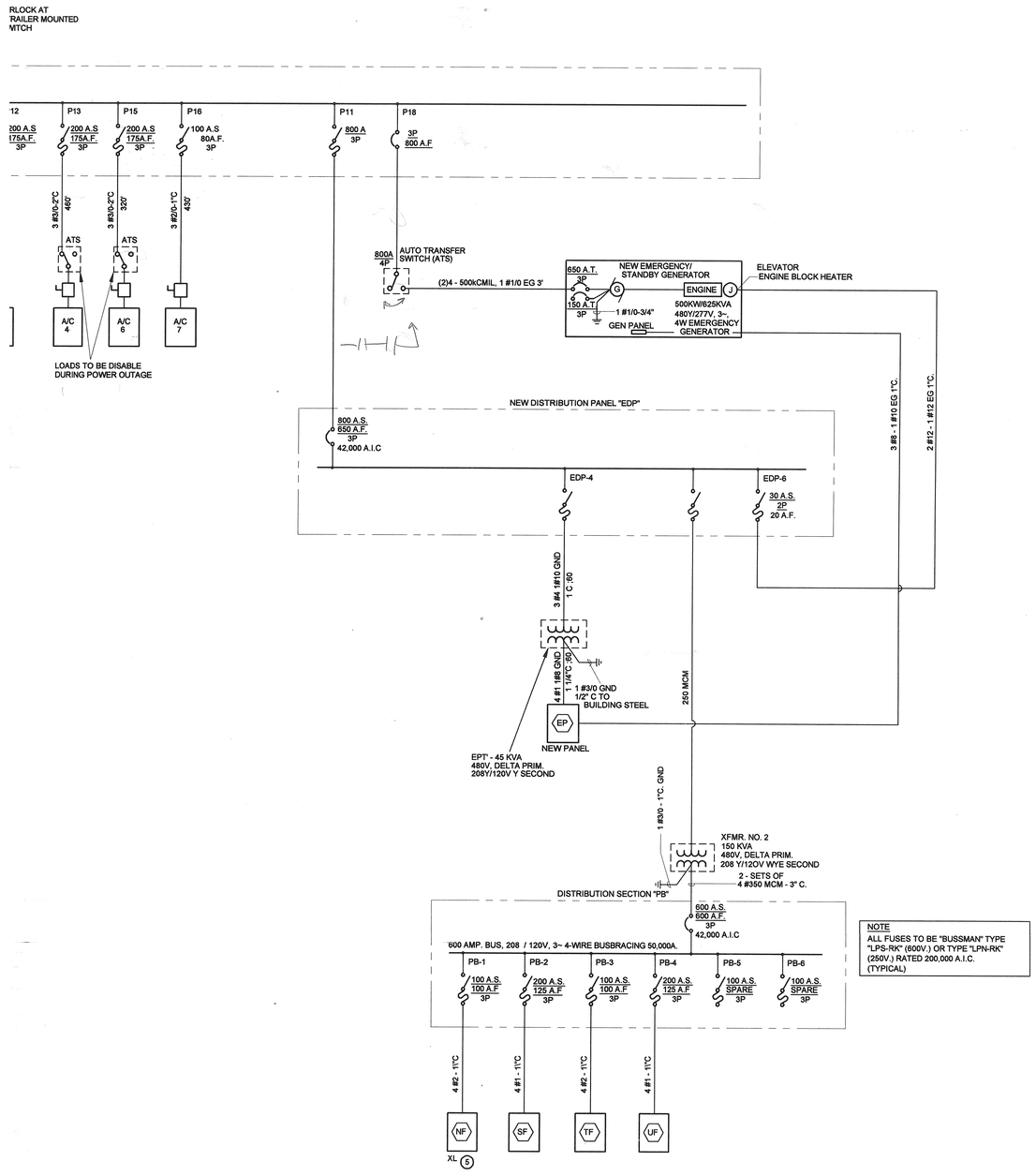

NOTE
ALL FUSES TO BE "BUSSMAN" TYPE "LPS-RK" (600V.) OR TYPE "LPN-RK" (250V.) RATED 200,000 A.I.C. (TYPICAL)

REVISIONS

1	
2	
3	
4	

PROJECT:

ENGINEERING SOLUTIONS
Roberto Arellano
12735 Golden Leaf Dr
Rancho Cucamonga, CA 91739
(909) 697-6965

DRAWN

DATE

SCALE

JOB NO.

SHEET

of

.OCK AT
NILER MOUNTED
TCH

P13 | P15 | P16 | P11 | P18

0 A.S
5A F.
3P

200 A.S
175A.F.
3P

200 A.S
175A.F.
3P

100 A.S
80A.F.
3P

800 A
3P

3P
800 A.F

3 #3/0-2"C
480'

3 #3/0-2"C
320'

3 #2/0-1"C
400'

ATS

ATS

A/C
4

A/C
6

A/C
7

LOADS TO BE DISABLE
DURING POWER OUTAGE

800A
4P

AUTO TRANSFER
SWITCH (ATS)

(2)4 - 500kCMIL, 1 #1/0 EG 3'

650 A.T.
3P

150 A.T.
3P

G

NEW EMERGENCY/
STANDBY GENERATOR

ENGINE

J

1 #1/0-3/4"

GEN PANEL

500KW/625KVA
480Y/277V, 3~,
4W EMERGENCY
GENERATOR

ELEVATOR
ENGINE BLOCK HEATER

3 #8 - 1 #10 EG 1"C.

2 #12 - 1 #12 EG 1"C.

NEW DISTRIBUTION PANEL "EDP"

800 A.S.
650 A.F.
3P
42,000 A.I.C

EDP-4

EDP-6

30 A.S.
2P
20 A.F.

3 #4, 1#10 GND
1 C. 60

4 #1 1#8 GND
1 1/4"C. 60'

1 #3/0 GND
1/2" C TO
BUILDING STEEL

250 MCM

EP

NEW PANEL

EPT' - 45 KVA
480V, DELTA PRIM.
208Y/120V Y SECOND

1 #3/0 - 1"C. GND

XFMR. NO. 2
150 KVA
480V, DELTA PRIM.
208 Y/120V WYE SECOND

2 - SETS OF
4 #350 MCM - 3" C.

DISTRIBUTION SECTION "PB"

600 A.S.
600 A.F.
3P
42,000 A.I.C

600 AMP. BUS, 208 / 120V, 3~ 4-WIRE BUSBRACING 50,000A.

PB-1 | PB-2 | PB-3 | PB-4 | PB-5 | PB-6

100 A.S.
100 A.F.
3P

200 A.S.
125 A.F.
3P

100 A.S.
100 A.F.
3P

200 A.S.
125 A.F.
3P

100 A.S.
SPARE
3P

100 A.S.
SPARE
3P

4 #2 - 1"C

4 #1 - 1"C

4 #2 - 1"C

4 #1 - 1"C

NF

SF

TF

UF

XL 5

NOTE
ALL FUSES TO BE "BUSSMAN" TYPE
"LPS-RK" (600V.) OR TYPE "LPN-RK"
(250V.) RATED 200,000 A.I.C.
(TYPICAL)

REVISIONS

1	
2	
3	
4	

PROJECT:

ENGINEERING SOLUTIONS
Roberto Arellano
12735 Golden Leaf Dr
Rancho Cucamonga, CA 91739
(909) 697-6965

DRAWN

DATE

SCALE

JOB NO.

SHEET

of

2nd Floor
5003 - 5004

2nd Floor

1st Floor.
Below Dispatch

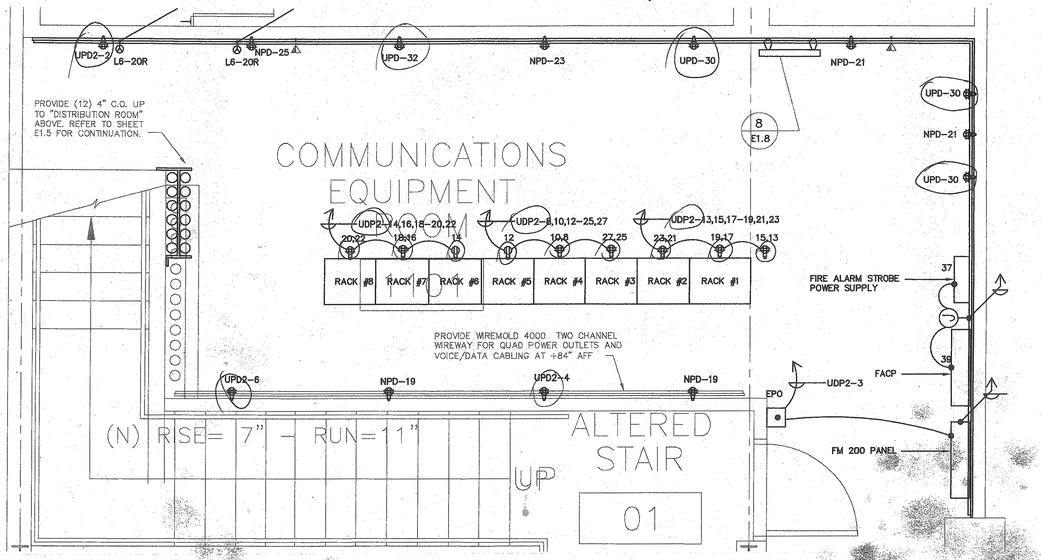

1 / E1.9 COMMUNICATIONS ROOM #1101
SCALE: 1/2" = 1' - 0"

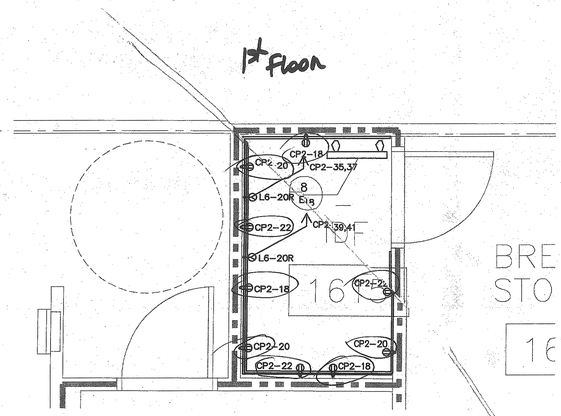

2 / E1.9 IDF #1615 DETAIL
SCALE: 1/2" = 1' - 0"

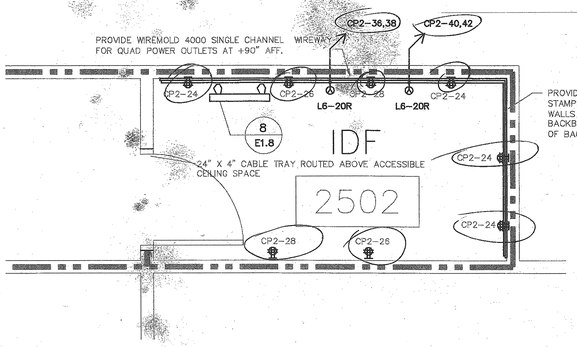

3 / E1.9 IDF #2502 DETAIL
SCALE: 1/2" = 1' - 0"

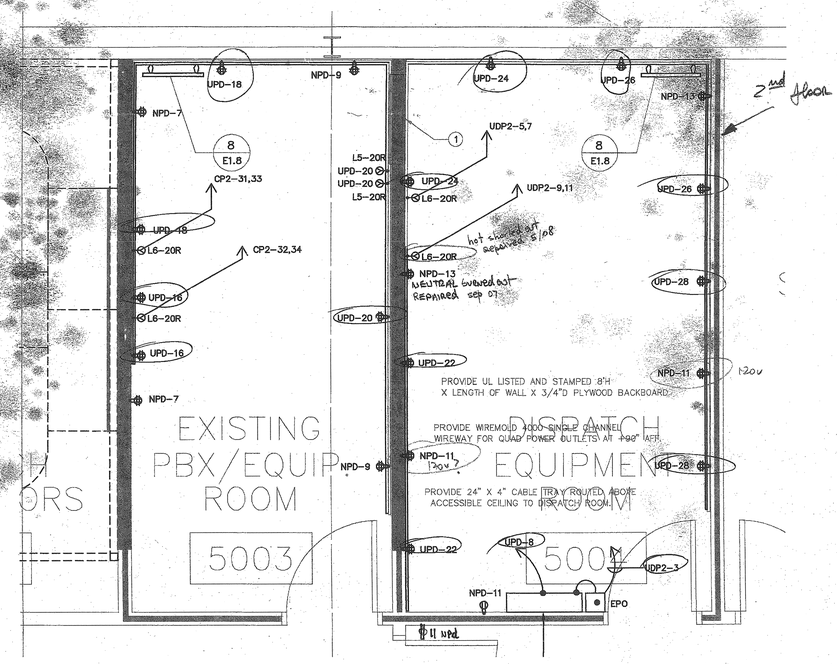

4 / E1.9 PBX ROOM #5003, 5004 DETAIL
SCALE: 1/2" = 1' - 0"

NOTES:
1. COORDINATE TO PROVIDE A 36"LONG BY 6" WIDE SLOT THROUGH THIS WALL TO ROUTE CABLE TRAY THROUGH.
2. EXISTING (2) 4"CONDUITS WITH VOICE/ DATA CABLING
3. PROVIDE (4) 4"EMPTY CONDUITS. PROVIDE(3) 1-1/4" INNERDUCT IN (2) CONDUITS.

MORROW MEADOWS CORP.
RECORD DRAWING
DATE 12/22/03
JOB NUMBER 631027

COORDINATION

	SIGNATURE	DATE
COORDINATION		
GENERAL CONTRACTOR		
MECHANICAL (DUCT)		
MECHANICAL (PIPE)		
PLUMBING		
ELECTRICAL		
SPRINKLER		

REV	DATE	DESCRIPTION	BY
F			
E			
D			
C			
B			
A			

Morrow-Meadows Corp.
ELECTRICAL CONTRACTORS AND ENGINEERS
231 Benton Court
City of Industry, CA 91789
Telephone: (909) 598-7708
Fax: (909) 598-3907
www.MORROW-MEADOWS.com
License #: 230813-C10

MORROW-MEADOWS CORP.
Group of Companies

IT ROOM POWER

ONTARIO
POLICE HEADQUARTERS
2534 S. ARCHIBALD AVE ONTARIO, CA 91761

date:	12/22/03
by:	NO
scale:	NONE
chk:	
job#:	631027
cad file:	XS_Builts\IT ROOMS
drawing no:	MM-E1.9

Fly trap by entrance ds #33 , / Knock ds #37 Time clock

MATCH LINE

TEAMING 1514

COPS & GANGS OPEN OFFICE 1507

COPS & GANGS OPEN OFFICE 1508

PLANNING/ BRIEFING 1515

COPS SGT. 1506

COPS SGT. 1505

COPS LT. 1504

DAB & ALARM TECH OFFICE 1503

HALL 1502

OPEN OFFICE 1407

MONITOR ROOM-B 1408

HALL 1403

OPEN OFFICE 1406

TRAINING OFF. 1304

TRAINING OPEN OFFICE 1305

TRAINING SUPP. 1306

EXPANSION/ SUPPLIES/FILES 405

SGT. & PERS. 1404

WORK AREA 1308

TRAINING OPEN OFFICE 1307

TRAINING/ LIBRARY 1302

MEDIA/VIDEO PROD. ROOM 1313

TRAINING STOR./MAT. 1312

HALL 1301

STOR. 1311

ONE-HOUR RATED CORRIDOR 1209

COMPUTER TRAINING ROOM 1204

STORAGE ROOM 1205

STORAGE ROOM 1206

SERV. ROOM 1207

STORAGE ROOM 1208

MULTI-PURPOSE COMMUNITY ROOM #2 1203

MULTI-PURPOSE COMMUNITY ROOM #1 1202

COMMUNICATIONS EQUIPMENT ROOM 1101

ANNUNCIATOR BOXES

ALTERED STAIR 01

WOMEN'S PUBLIC RESTROOMS 1104

MEN'S PUBLIC RESTROOM 1102

PUBLIC LOBBY 1100

PUBLIC CORRIDOR 1105

PUBLIC CORRIDOR 1107

ONE-HOUR RATED CORRIDOR 1201

ONE-HOUR RATED CORRIDOR 1401

ONE-HOUR RATED CORRIDOR 1402

ONE-HOUR RATED CORRIDOR 1601

ONE-HOUR RATED CORRIDOR 1602

ONE-HOUR RATED CORRIDOR 1701

ONE-HOUR RATED CORRIDOR 1801

ONE-HOUR RATED LOBBY 1901

ONE-HOUR RATED CORRIDOR 1903

CRIME PREV. STOR 1812

IN-POLYGRAPH 1813

INT. POLYGRAPH 1814

SM. EVID. VIEWING 1815

CRIME PREVENTION OPEN OFF. 1811

RECORDS COUNTER 1807

2 DRAWER LATERAL FILES WITH 200 SLOTS ABOVE

EXPLORER OFFICE/SUPERVISOR 1809

VISITORS OFF. 1810

F. PRINT/ MAIL 1817

MAG. STAFF COUNTER 1818

COPY CENTER 1819

VERTICAL TECH ROOM 1921

RECORDS COUNTER 1806

FRONT COUNTER 1805

TELEPHONE/ DISPATCH OPERATION 1803

HALL 1802

OPEN OFFICE 1822

OPEN OFFICE 1827

OPEN OFFICE 1828

OPEN OFFICE 1823

RECORDS SUPER. 1824

RECORDS MGR. 1825

OPEN OFFICE 1829

OPEN OFFICE 1905

RECPT./ LOBBY 1905

OPEN OFFICE 1906

INT. ROOM 1912

INT. ROOM 1913

INT. ROOM 1914

OPEN OFFICE 1908

STORAGE 1908

ELEV. 01

EXISTING STAIR 02

PANEL 'SF'

SF 2,4,6 PANEL 1TSF

SERVICES CAPTAIN 1714

INVEST. CAPTAIN 1713

COURTYARD 1702

OPEN OFFICE 1707

OPEN OFFICE 1708

EXEC. CONF. ROOM 1712

INTELL. DET. (2) 1709

INTERVIEW 1711

PARTOL CONF. ROOM 1607

WOMEN'S STAFF TLTS. 1605

MEN'S STAFF TLTS 1606

BRIEFING STORAGE 1614

JAN. ROOM 1603

GALLERY 113

GALLERY STORAGE 1114

STORAGE 1902

SORT ROOM 1108

INT. ROOM 1111

INT. ROOM 1109

EXHIBIT 1112

PUBLIC CORRIDOR 1107

OPEN OFFICE 1801

OPEN OFFICE 1802

OPEN OFFICE 1803

OPEN OFFICE 1804

OPEN OFFICE 1805

OPEN OFFICE 1806

OPEN OFFICE 1807

OPEN OFFICE 1808

OPEN OFFICE 1809

OPEN OFFICE 1810

OPEN OFFICE 1811

OPEN OFFICE 1812

OPEN OFFICE 1813

OPEN OFFICE

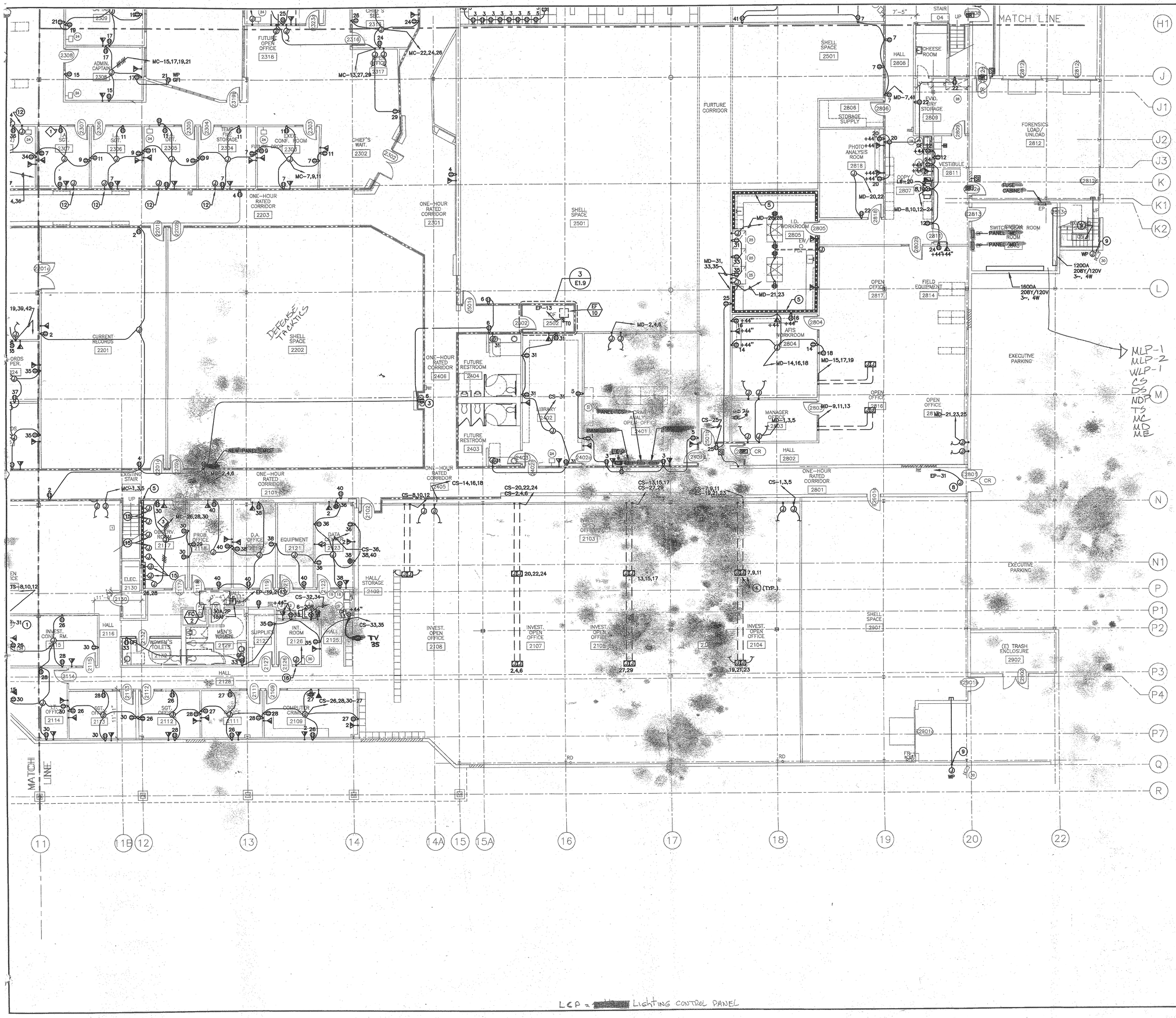

1. CONNECTED TO SECURITY SYSTEM CONTROLLER AND DOOR 1901 POWER SUPPLY
2. NOT USED
3. RECEPT. FOR DRINKING FOUNTAIN
4. NOT USED
5. NOT USED
6. NOT USED
7. NOT USED
8. NOT USED
9. CONNECT TO EXTERIOR CCTV CAMERAS
10. NOT USED
11. NOT USED
12. J-BOX FOR CCTV CAMERA @+84"AFF

COORDINATION

	SIGNATURE	DATE
CÓORDINATION		
GENERAL CONTRACTOR		
MECHANICAL (DUCT)		
MECHANICAL (PIPE)		
PLUMBING		
ELECTRICAL		
SPRINKLER		

REV.	DATE	DESCRIPTION	BY
A	10/09/2003	COMPILATION	NO
B			
C			
D			
E			
F			

MORROW-MEADOWS CORP.
Group of Companies
"The Powerful Solution"

Morrow-Meadows Corp.
ELECTRICAL CONTRACTORS AND ENGINEERS
231 Benton Court
City of Industry, Ca. 91789
Telephone: (909) 598-7700
Fax: (909) 598-3907
www.MORROW-MEADOWS.com
License #: 230813-C10

MORROW MEADOWS CORP.
RECORD DRAWING 02/22/03
JOB NUMBER 631027
RECORD DRAWING 631027
DATE 02/22/03
JOB NUMBER 631027

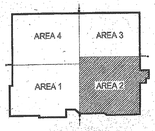

TITLE:
FIRST FLOOR POWER
ONTARIO POLICE HEADQUARTERS
2534 S. ARCHIBALD

date:	10/09/03	by:	N. OLIVER
scale:	1/8"=1'-0"	chk:	N. OLIVER
job#:	631027		
cad file:	Power.dwg		
drawing no:	MM-E2.2		

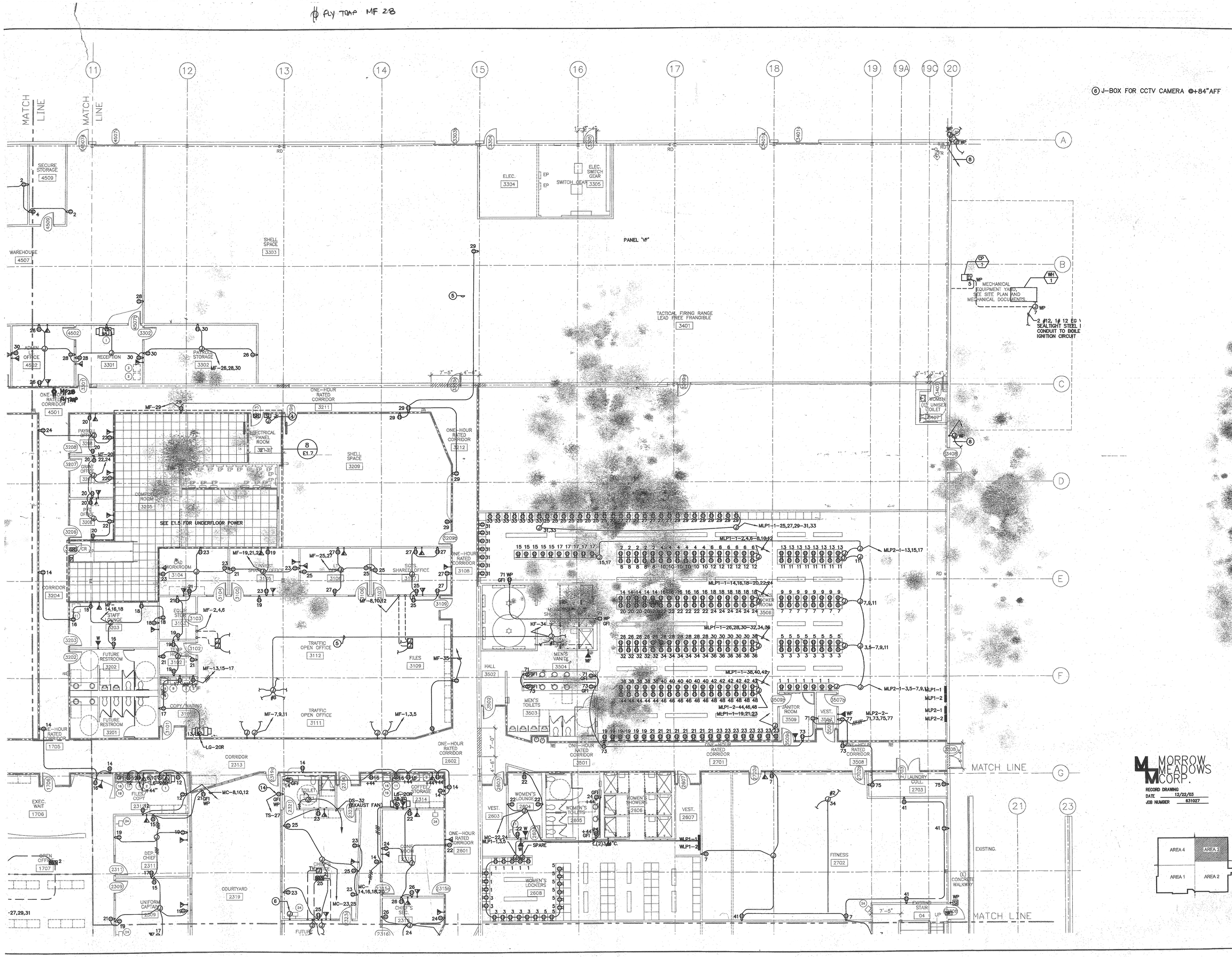

MORROW MEADOWS CORP.
RECORD DRAWING
DATE 12/22/03
JOB NUMBER 631027

COORDINATION

REV.	DATE	DESCRIPTION	BY
A	10/09/2003	COMPILATION	NO
B			
C			
D			
E			
F			

MORROW-MEADOWS CORP.
Group of Companies
"The Powerful Solution"

Morrow-Meadows Corp.
ELECTRICAL CONTRACTORS AND ENGINEERS
231 Benton Court
City of Industry, Ca. 91789
Telephone: (909) 598-7700
Fax: (909) 598-3907
www.MORROW-MEADOWS.com
License #: 230813-C10

TITLE:
FIRST FLOOR POWER

ONTARIO POLICE HEADQUARTERS
2534 S. ARCHIBALD

date:	10/09/03	by:	N. OLIVER
scale:	1/8"=1'-0'	chk:	N. OLIVER
job#:	631027		
cad file:	Power.dwg		
drawing no:	MM-E2.3		

Ø FLY TRAP cb GF 19

1609

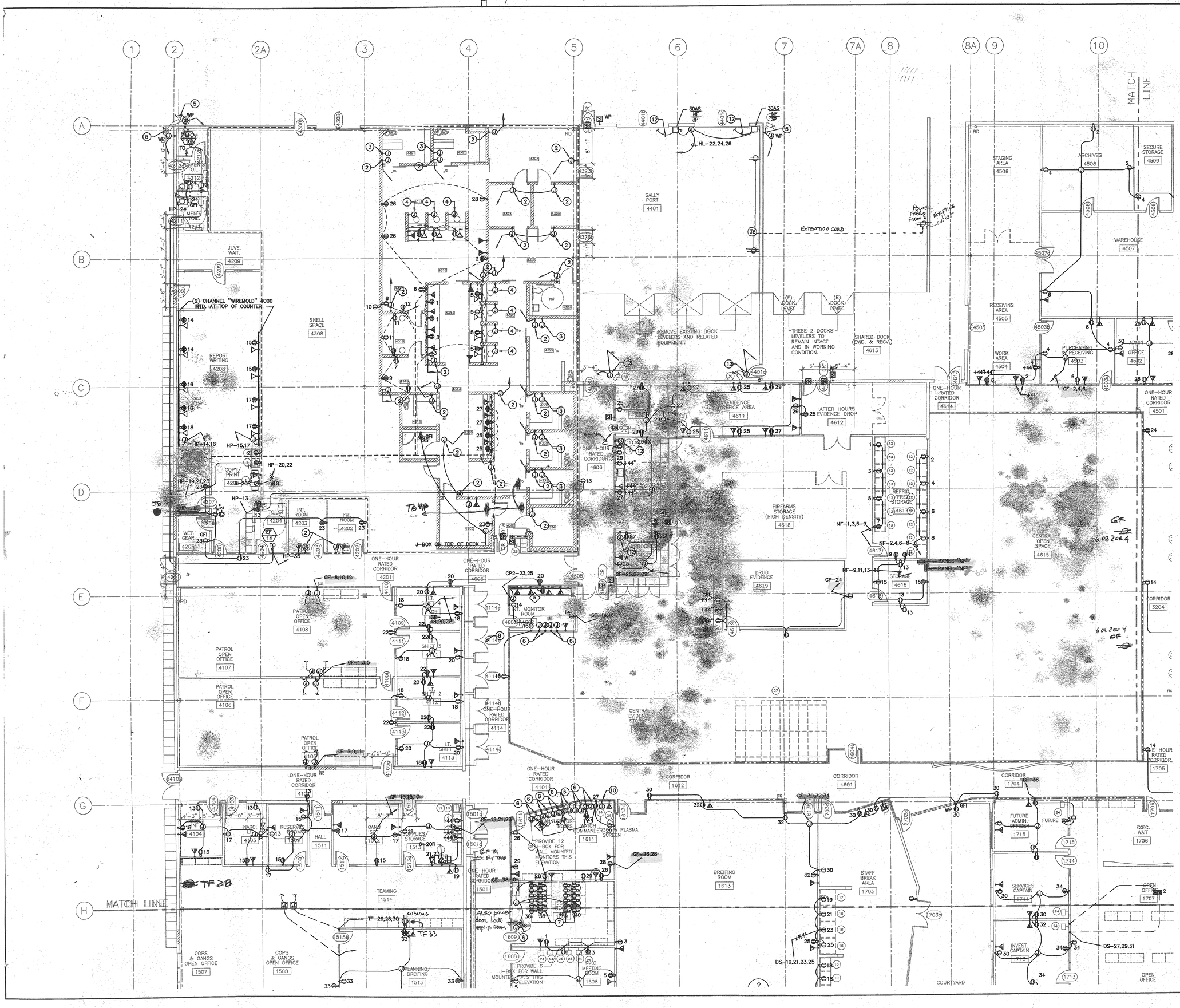

② J-BOX AT +8'-0" FOR CAMMERA.
③ J-BOX AT +42" FOR PANIC DEVICE
④ J-BOX AT +42" FOR INTERCOM
⑤ CONNECT TO EXTERIOR CAMMERA

EF 3,31,34

MORROW MEADOWS CORP.
RECORD DRAWING
DATE 12/22/03
JOB NUMBER 631027

AREA 4 | AREA 3 | AREA 1 | AREA 2

COORDINATION

COORDINATION	SIGNATURE	DATE	
GENERAL CONTRACTOR			
MECHANICAL (DUCT)			
MECHANICAL (PIPE)			
PLUMBING			
ELECTRICAL			
SPRINKLER			

REV.	DATE	DESCRIPTION	BY	NO
A	10/09/2003	COMPILATION		

MORROW-MEADOWS CORP.
Group of Companies
"The Powerful Market"

Morrow-Meadows Corp.
ELECTRICAL CONTRACTORS AND ENGINEERS
231 Benton Court
City of Industry, Ca. 91789
Telephone: (909) 598-7700
Fax: (909) 598-3907
www.MORROW-MEADOWS.com
License #: 230813-C10

TITLE: FIRST FLOOR POWER

ONTARIO POLICE HEADQUARTERS
2534 S. ARCHIBALD

date:	10/09/03	by:	N. OLIVER
scale:	1/8"=1'-0"	chk:	N. OLIVER
job#:	631027		
cad file:	Power.dwg		
drawing no:	MM-E2.4		

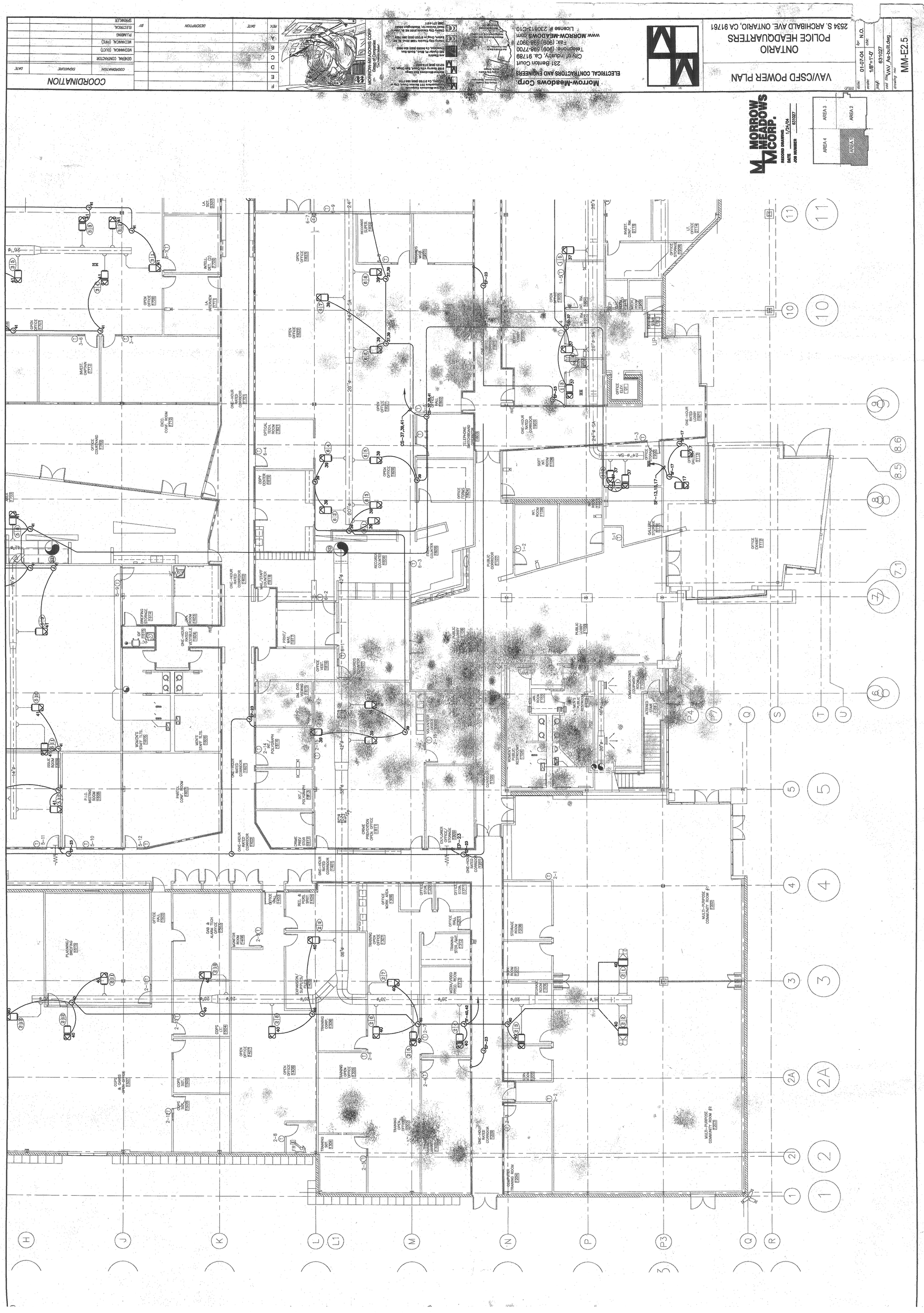

VAV/CSFD POWER PLAN
ONTARIO
POLICE HEADQUARTERS
2534 S. ARCHIBALD AVE. ONTARIO, CA 91761
MM-E2.5
Morrow-Meadows Corp.
ELECTRICAL CONTRACTORS AND ENGINEERS
231 Benton Court
City of Industry, Ca. 91789
Telephone: (909) 598-7700
Fax: (909) 598-3907
www.MORROW-MEADOWS.com
License # 230813-C10
MORROW MEADOWS CORP.
RECORD DRAWING
DATE 1/24/04
JOB NUMBER 631027
AREA 1
AREA 2
AREA 3
AREA 4
COORDINATION



TITLE:

VAV/CSFD POWER PLAN

ONTARIO
POLICE HEADQUARTERS
2534 S. ARCHIBALD AVE. ONTARIO, CA 91761

RECORD DRAWING
DATE 1/24/04
JOB NUMBER 631027

DWG.	01-07-04
SCALE:	1/8"=1'-0"
JOB#	631027
DWG. NO.	MM-E2.6
Geometry: (N,W,A)	As-built.dwg

Morrow-Meadows Corp.
ELECTRICAL CONTRACTORS AND ENGINEERS
231 Benton Court
City of Industry, Ca. 91789
Telephone: (909) 598-7700
Fax: (909) 598-3907
www.MORROW-MEADOWS.com
License #: 230813-C10

Morrow-Meadows Corporate Headquarters 231 Benton Court, City of Industry, Ca 91789 (909) 598-7700

Morrow-Meadows San Diego 9160 Kearny Villa Court, San Diego, Ca 92123 (858) 571-2800

Arc Electric South San Francisco, Ca

Cherry City Electric 1295 22nd. Pl. SE Salem, Oregon 97302 (503) 399-7707

Cherry City Electric 9100 NE St. John's Road Vancouver, Washington 98665 (360) 573-4411

MORROW-MEADOWS CORP. Orange County

REV.	DATE	DESCRIPTION	BY
F			
E			
D			
C			
B			
A			

COORDINATION

COORDINATION	SIGNATURE	DATE
GENERAL CONTRACTOR		
MECHANICAL (DUCT)		
MECHANICAL (PIPE)		
PLUMBING		
ELECTRICAL		
SPRINKLER		

REV.	DATE	DESCRIPTION	BY
A			
B			
C			
D			
E			
F			

COORDINATION

	COORDINATION	SIGNATURE	DATE
GENERAL CONTRACTOR			
MECHANICAL (DUCT)			
MECHANICAL (PIPE)			
PLUMBING			
ELECTRICAL			
SPRINKLER			

MORROW-MEADOWS CORP.
General Contractors

Morrow-Meadows Corp.
ELECTRICAL CONTRACTORS AND ENGINEERS
231 Benton Court
City of Industry, Ca. 91789
Telephone: (909) 598-7700
Fax: (909) 598-3907
www.MORROW-MEADOWS.com
License #: 230813-C10

VAV/CSFD POWER PLAN

ONTARIO
POLICE HEADQUARTERS
2534 S. ARCHIBALD AVE. ONTARIO, CA 91761

dsgnr:	N.O.
date:	01-07-04
scale:	1/8"=1'-0"
job#:	631027
cad file:	VAV_As-built.dwg
drawing no:	MM-E2.7

MORROW MEADOWS CORP.
RECORD DRAWING 1/24/04
JOB NUMBER 631027

AREA 1 | AREA 2 | AREA 3 | AREA 4

MECHANICAL EQUIPMENT YARD. SEE ARCHITECTURAL AND MECHANICAL DOCUMENTS.

RELAYS FOR FIRE ALARM SHUTDOWN

EXISTING CONCRETE WALKWAY

TACTICAL FIRING RANGE LOAD PROOF PANNABLE 2503

SHELL SPACE 1009

SHELL SPACE 2009

OFFICE STORAGE 1005

GUN VAULT 1004

RANGE STORAGE 1003

READY ROOM 1002

READY ROOM 2002

RANGE CONTROL 1001

RANGE CONTROL 2001

EF-12 UNISEX SHOWER 1007

UP

DOWN

ONE-HOUR RATED CORRIDOR 1008

ONE-HOUR RATED CORRIDOR 2008

LAUNDRY 2701

OFFICE FITNESS 2705

OFFICE VEST 2707

LAUNDRY 1006

OFFICE VEST 1007

ONE-HOUR RATED CORRIDOR 1009

ONE-HOUR RATED CORRIDOR 2009

OFFICE ELEC. 1004

ELEC. SWITCH GEAR 1003

MEN'S SHOWER 1005

MEN'S LOCKER/ CHANGING ROOM 1004

MEN'S TOILETS 1003

WOMEN'S LOUNGE 2704

WOMEN'S LOCKERS 2703

OFFICE VEST 2706

ONE-HOUR RATED CORRIDOR 2010

ONE-HOUR RATED CORRIDOR 1010

ONE-HOUR RATED CORRIDOR 1011

ONE-HOUR RATED CORRIDOR 2011

ELECTRICAL PANEL ROOM 1013

LT. OFFICE 1106

ANCST. SHARED OFFICE 1105

OFFICE 1104

TRAFFIC OFFICE 1129

TRAFFIC OFFICE 1113

CHIEF'S SEC. 2318

CONF. ROOM 2315

CHIEF'S OFFICE 2317

OFFICE 2319

OFFICE CORRIDOR 2319

CAD WORKROOM 1115

COPY STOR. 1120

TEMP HOLD 1109

OFFICE COPY/WAITING 1111

OFFICE CORRIDOR 1114

FILES/ COPY 2314

EXEC. CHIEF 2311

UNIFORM CAPTAIN 2312

PAYROLL STOR. 1008

PAYROLL 1007

HST H/D ROOM 1116

FUTURE RESTROOM 1122

FUTURE RESTROOM 1121

P/C OFFICE 1117

OFFICE RESTROOM 1030

OFFICE CORRIDOR 1031

ONE-HOUR RATED CORRIDOR 1118

SECURE STORAGE 1029

OFFICE WAREHOUSE 1027

AV/IT TECH/ELEC. 1026

PAYROLL STOR. 1008

OFFICE CORRIDOR 1032

ONE-HOUR RATED CORRIDOR 1119

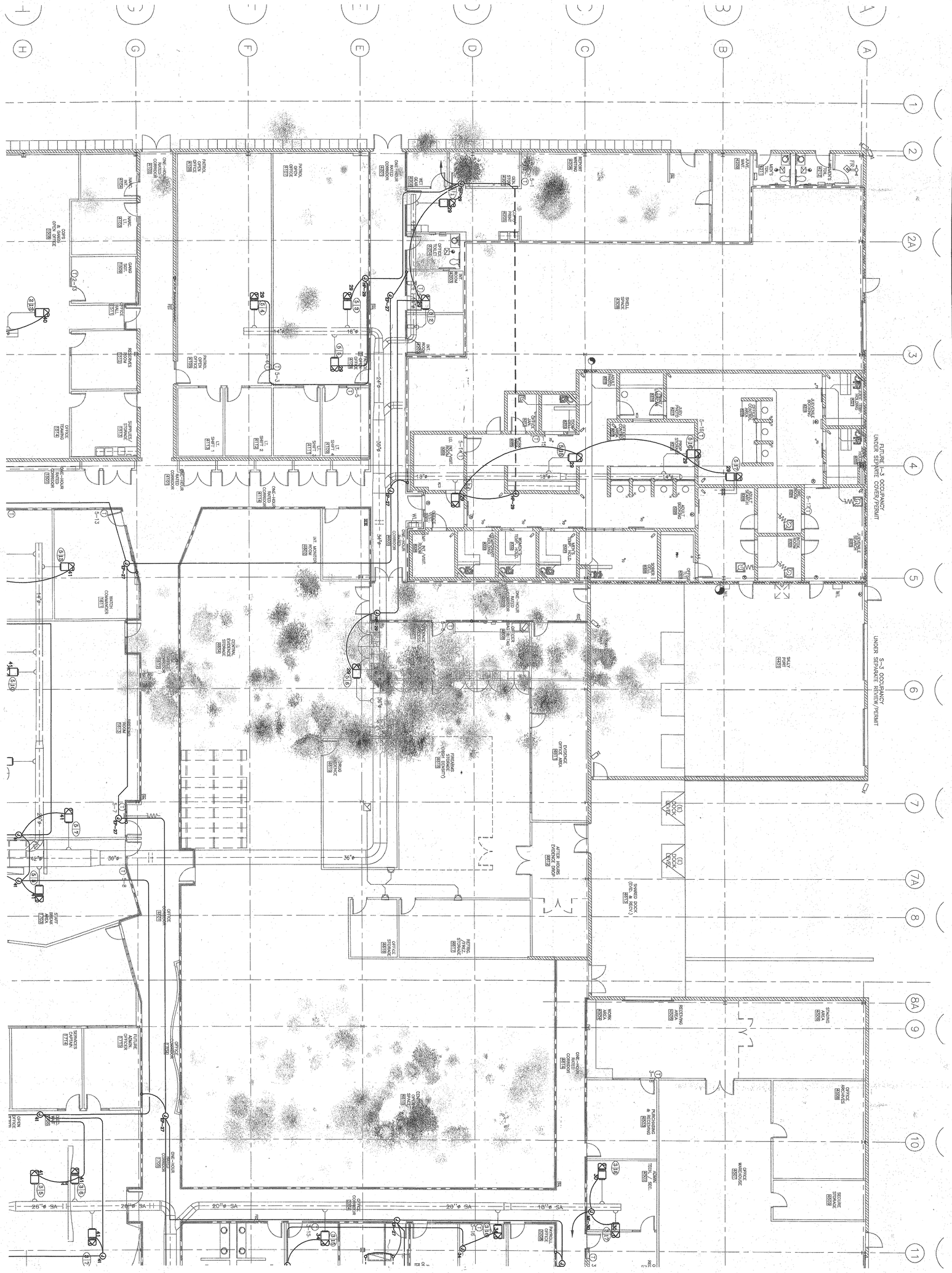

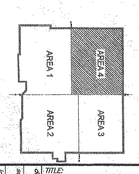

MORROW MEADOWS CORP.

RECORD DRAWING
DATE 1/24/04
JOB NUMBER 631027

TITLE:

VAV/CSFD POWER PLAN

ONTARIO
POLICE HEADQUARTERS
2534 S. ARCHIBALD AVE. ONTARIO, CA 91761

date: 01-07-04 | by: N.O.
scale: 1/8"=1'-0" | chk:
job#: 631027
cad file: VAV_As-built.dwg
drawing no: MM-E2.8

Morrow-Meadows Corp.
ELECTRICAL CONTRACTORS AND ENGINEERS
231 Benton Court
City of Industry, Ca. 91789
Telephone: (909) 598-7700
Fax: (909) 598-3907
www.MORROW-MEADOWS.com
License #: 230813-C10

Morrow-Meadows Corporate Headquarters 231 Benton Court, City of Industry, Ca 91789 (909) 598-7700

Morrow-Meadows San Diego 9100 Kearny Villa Court, San Diego, Ca 92123 (858) 974-3850

Arc Electric 385 Oyster Pt. Blvd., South San Francisco, Ca 94080 (650) 634-0682

Cherry City Electric 1506 22nd St. SE Salem, Oregon 97302 (503) 389-7609

Cherry City Electric 9100 NE St. John's Road Vancouver, Washington 98665 (360) 571-4411

MORROW-MEADOWS CORP. Group of Companies

REV.	DATE	DESCRIPTION	BY
F			
E			
D			
C			
B			
A			

COORDINATION

COORDINATION	SIGNATURE	DATE
GENERAL CONTRACTOR		
MECHANICAL (DUCT)		
MECHANICAL (PIPE)		
PLUMBING		
ELECTRICAL		
SPRINKLER		

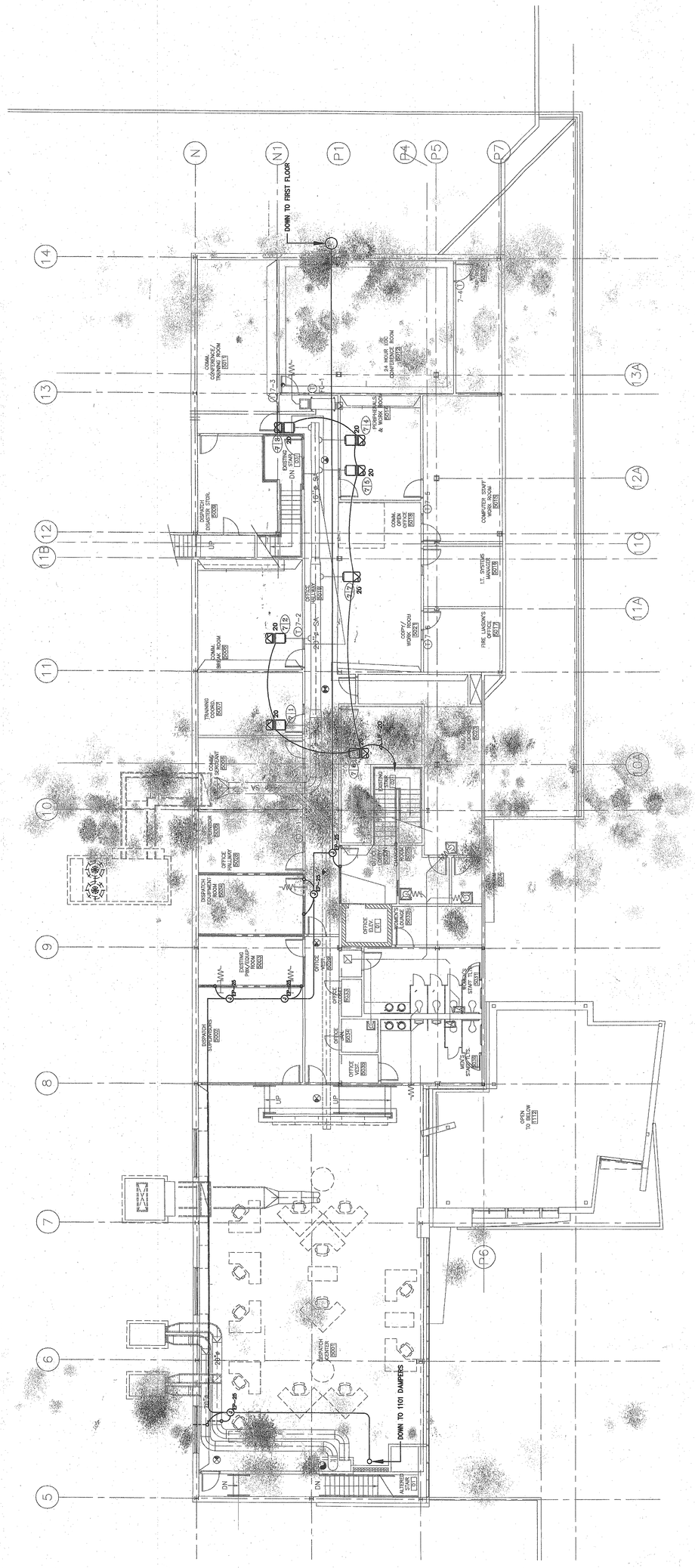

MORROW MEADOWS CORP.
RECORD DRAWING
DATE 1/24/04
JOB NUMBER 631027

TITLE: VAV/CSFD POWER PLAN

ONTARIO
POLICE HEADQUARTERS
2534 S. ARCHIBALD AVE. ONTARIO, CA 91761

date:	01-07-04
by:	N.O.
scale:	1/8"=1'-0"
chk:	
job#:	631027
cad file:	VAV_As-built.dwg
drawing no:	MM-E2.9

Morrow-Meadows Corp.
ELECTRICAL CONTRACTORS AND ENGINEERS
231 Benton Court
City of Industry, Ca. 91789
Telephone: (909) 598-7700
Fax: (909) 598-3907
www.MORROW-MEADOWS.com
License # 230813-C10

MORROW-MEADOWS CORP.
Group of Companies
"The Pacific Rail"

REV.	DATE	DESCRIPTION	BY
A			
B			
C			
D			
E			
F			

COORDINATION

COORDINATION	SIGNATURE	DATE
GENERAL CONTRACTOR		
MECHANICAL (DUCT)		
MECHANICAL (PIPE)		
PLUMBING		
ELECTRICAL		
SPRINKLER		

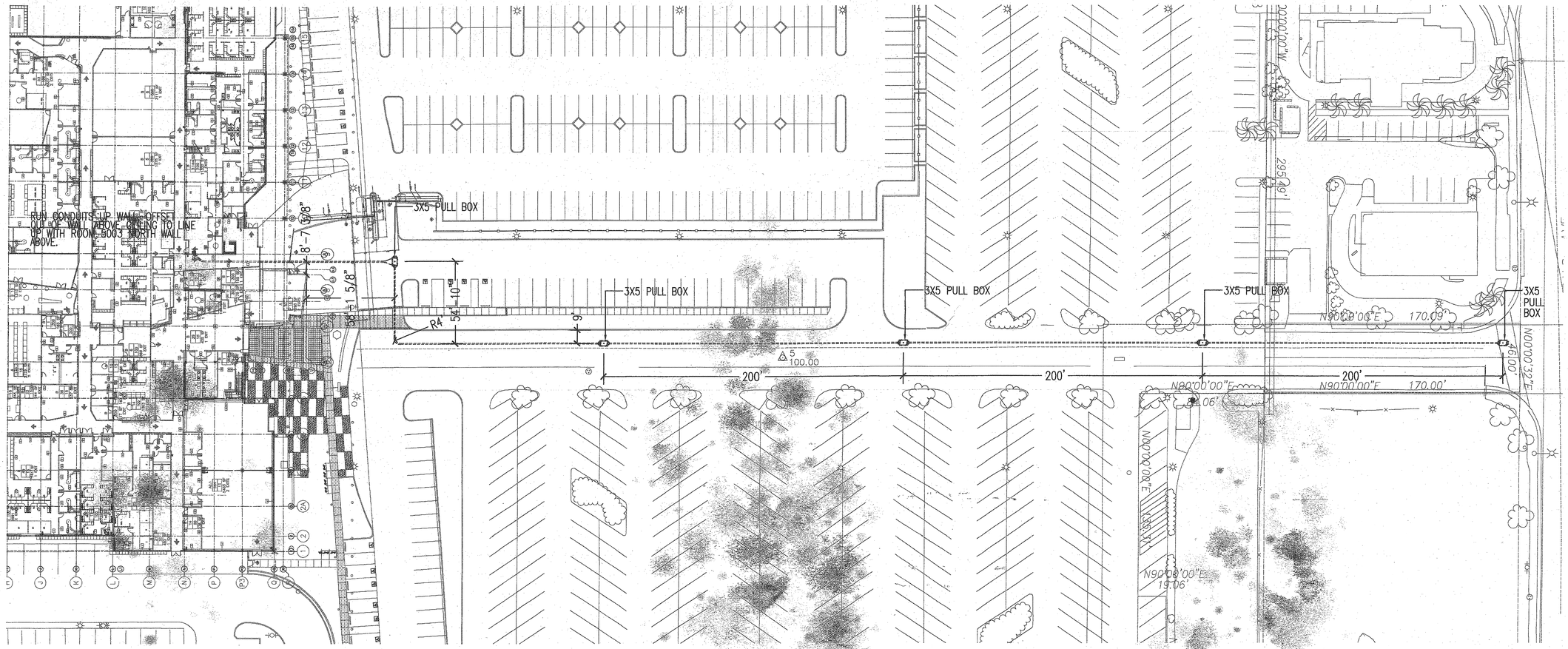

SITE PLAN — SCALE 1"=30' — (1)

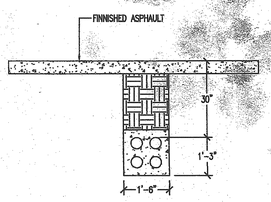

DUCTBANK ELEVATION — SCALE 1/2" = 1'-0" — (2)

COORDINATION		
	SIGNATURE	DATE
COORDINATION		
GENERAL CONTRACTOR		
MECHANICAL (DUCT)		
MECHANICAL (PIPE)		
PLUMBING		
ELECTRICAL		
SPRINKLER		

REV.	DATE	DESCRIPTION	BY
F			
E			
D			
C			
B			
A			

MORROW-MEADOWS CORP.
Group of Companies
"The Power to Build"

Morrow-Meadows Corp.
ELECTRICAL CONTRACTORS AND ENGINEERS
231 Benton Court
City of Industry, Ca. 91789
Telephone: (909) 594-7700
Fax: (909) 594-3907
www.MORROW-MEADOWS.com
License #: 230813-C10

MORROW MEADOWS CORP.

RECORD DRAWING
DATE 12-08-03
JOB NUMBER 631027

TITLE
COMMUNICATION DUCTBANK
ONTARIO
POLICE HEADQUARTERS
2534 S. ARCHIBALD AVE. ONTARIO, CA. 91761

date:	12-03-03
by:	NO
scale:	AS NOTED
chk:	
job#:	631027
cad file:	Site Conduit.dwg
drawing no:	MM-E3.0



COORDINATION
GENERAL CONTRACTOR
MECHANICAL (DUCT)
MECHANICAL (PIPE)
PLUMBING
ELECTRICAL
SPRINKLER
SIGNATURE
DATE
REV.
DESCRIPTION
BY
Morrow-Meadows Corp.
ELECTRICAL CONTRACTORS AND ENGINEERS
231 Benton Court
City of Industry, Ca. 91789
Telephone: (909) 598-7700
Fax: (909) 598-3907
www.MORROW-MEADOWS.com
License #: 230813-C10
SITE LIGHTING
ONTARIO
POLICE HEADQUARTERS
2534 S. ARCHIBALD AVE. ONTARIO, CA
MORROW MEADOWS CORP.
RECORD DRAWING
DATE 01-14-04
JOB NUMBER 631027
MM-E3.0 A & B
1298 SF
2 EXITS
SF-1 AUTOMATIC DOOR
RELOCATED OS&Y
RELOCATED PIV
FA FOR OS&Y
HR'S TO EF
300VA TRANSFORMER C2 FOR BENCH LIGHTS CIRCUIT EF-22
RELAY FOR TREE LIGHTS CONTROLLED FROM EF-30
"C" CONDULETS
HR SIGNAL PULL BOX
HR POWER PULL BOX

60 FREEWAY

NOTE

CIRCUIT ROUTING IS DIAGRAMMATIC BUT DRAWN AS ACCURATELY AS MORROW-MEADOWS WAS ABLE TO DETERMINE. EXACT CONDUIT LOCATIONS ARE NOT KNOWN, HOWEVER PULL BOX LOCATIONS ARE CORRECT. FIXTURES ARE 480V 1 PH FED BY 3 PH CIRCUITS ON 3P BREAKERS. MM WAS NOT AUTHORIZED TO VERIFY POLES ARE BALANCED BETWEEN PHASES.

Δ=00°53'24"
R=3000.00'

N85°11'41"W 656.59'

HF-7,9,11

Δ=04°58'09" R=4500.00' L=390.19'

HF-25 (+ 2 SP & 1 N) SIGN

HF-7,9,11

HF-2,4,6

HF-8,10,12

HF-1,3,5 + 3 SPARE TO ELECTRIC RM. 3213 IN 2"C.

HF-2,4,6 + 8,10,12 + 7,9,11 + 5 SPARE TO ELECTRIC RM. 3213 IN (2) 2"C.

1" SLEEVE

S90°00'00"E 654.43'

N0°00'00"E 295.00'

N90°00'00"E 170.09'

N0°00'00"E 95.06'

N90°00'00"E 19.06'

S0°00'00"W 95.06'

S90°00'00"E 65.00'

N0°00'00"E 300.00'

S90°00'00"E 435.38'

N0°00'00"E 314.17'

103.34

102.71

98.87

97.25

ARCHIBALD AVENUE

MORROW MEADOWS CORP.

RECORD DRAWING
DATE 12-08-03
JOB NUMBER 631027

COORDINATION

	DATE
COORDINATION/ SIGNATURE	
GENERAL CONTRACTOR	
MECHANICAL (DUCT)	
MECHANICAL (PIPE)	
PLUMBING	
ELECTRICAL	
SPRINKLER	

	DATE	DESCRIPTION
F		
E		
D		
C		
B		
A		

MORROW-MEADOWS CORP.
Group of Companies

Morrow-Meadows Corp.
ELECTRICAL CONTRACTORS AND ENGINEERS
231 Benson Court
City of Industry, Ca. 91789
Telephone: (909) 598-7700
Fax: (909) 598-3907
www.MORROW-MEADOWS.com
License # 290813(A,B,C10)

PARKING LOT LIGHTING
ONTARIO
POLICE HEADQUARTERS
2534 S. ARCHIBALD AVE. ONTARIO, CA. 91761

date:	12-03-03
by:	NO
scale:	1"=40'-0"
chk:	
job#:	631027
cad file:	Site Poles.dwg
drawing no:	MM-E3.01

MATCH LINE

LOW VOLTAGE PATH LIGHTS BY OTHERS THIS AREA

DELRAY FIXTURES

STUBED OUT FOR FUTURE BUILD OUT

REFEED EXISTING DOWN LIGHTS IN EXTERIOR SOFFIT.

FIXTURE SCHEDULE

BBA		BBB	
F5		LCP	
BBC		F14	
BBD		F18	
BBF		SIGI	
BBG		F8	
BBH		F4	
F23		F21	
TEMP		DELRAY	
		EXIST LIGHTS	
		BLITZ	

- CEILING MOUNTED MOTION SENSOR
- WALL MOUNTED MOTION SENSOR
- CEILING SENSOR RELAY
- ADDED CEILING MOUNTED MOTION SENSOR
- ADDED CEILING SENSOR RELAY
- ADDED WALL MOUNTED MOTION SENSOR

THIS DRAWING IS REPRESENTATIVE OF MORROW-MEADOWS INTERPRETATION OF RESPONSES TO BAYLEY RFI'S #183, 221, 222, 223, FIELD ORDER #13, THE CONTRACT DRAWINGS AND MORROW-MEADOWS CONTRACT VALUE ENGINEERED DRAWINGS. IT IN NO WAY IS INTENDED TO BE A COMPLETE REPRESENTATION OF THE END USERS NEEDS AND REQUIREMENTS. MORROW-MEADOWS ASSUMES NO RESPONSIBILITY FOR ENGINEERING OR DESIGN.

COORDINATION

COMPILATION

MORROW-MEADOWS CORP.
Design & Construction Management

Morrow-Meadows Corp.
ELECTRICAL CONTRACTORS AND ENGINEERS
231 Lake of Count
City of Industry, CA 91789
Telephone: (626) 965-7700
Fax: (626) 965-4387
www.MORROW-MEADOWS.com
Contractor's Lic. # 329615

MORROW MEADOWS CORP.
RECORD DRAWING
DATE 02/22/03
JOB NUMBER 631027

AREA 4 | AREA 3 | AREA 1 | AREA 2

FIRST FLOOR LIGHTING

ONTARIO POLICE HEADQUARTERS

2834 S. ARCHIBALD

date: 10/09/03	by: N. OLIVER
scale: 1/8"=1'-0"	chk: N. OLIVER
job#: 631027	
cad file: VE_LIGHTING	
drawing no: MM-E3.1	

MATCH LINE
EXISTING TO REMAIN

FIXTURE SCHEDULE

BBA		BBB	
F5		LCP	
BBC		F14	
BBD		F18	
BBF		SIGI	
BBG		F8	
BBH		F4	
F23		F21	
TEMP		DELRAY	
		EXIST LIGHTS	
		BLITZ	

- CEILING MOUNTED MOTION SENSOR
- WALL MOUNTED MOTION SENSOR
- CEILING SENSOR RELAY
- ADDED CEILING MOUNTED MOTION SENSOR
- ADDED CEILING SENSOR RELAY

THIS DRAWING IS REPRESENTATIVE OF MORROW-MEADOWS INTERPRETATION OF RESPONSES TO BAYLEY RFI'S #183, 221, 222, 223, FIELD ORDER #13, THE CONTRACT DRAWINGS AND MORROW-MEADOWS CONTRACT VALUE ENGINEERED DRAWINGS. IT IN NO WAY IS INTENDED TO BE A COMPLETE REPRESENTATION OF THE END USERS NEEDS AND REQUIREMENTS. MORROW-MEADOWS ASSUMES NO RESPONSIBILITY FOR ENGINEERING OR DESIGN.

COORDINATION	DATE
GENERAL CONTRACTOR	
MECHANICAL (DIST)	
MECHANICAL (PKG)	
PLUMBING	
ELECTRICAL	
SPRINKLER	

NO	DESCRIPTION	DATE	REV
A	COMPILATION	10/09/2003	

MORROW-MEADOWS CORP.
Group of Companies
"The Powerful Solution"

Morrow-Meadows Corporation
Corporate Headquarters
1585 Kuehner Drive, Simi Valley, CA 93063
Telephone: (805) 584-4150 Fax: (805) 584-1507

Morrow-Meadows San Diego
2150 Kettering #100, Suite 100, San Diego, Ca 92101
Telephone: (619) 239-7000 Fax: (619) 239-7005

Morrow-Meadows Arizona
4414 E. Wood Street, Phoenix, AZ 85040
Telephone: (602) 437-1414 Fax: (602) 437-1415

Morrow-Meadows Northern California
Sierra Corporate Center
2880 Gateway Oaks Drive, Suite 100, Sacramento, CA 95833
Telephone: (916) 924-1000 Fax: (916) 924-1001

Morrow-Meadows Corp.
ELECTRICAL CONTRACTORS AND ENGINEERS
231 Benton Court
City of Industry, Ca. 91789
Telephone: (909) 598-7700
Fax: (909) 598-3907
www.MORROW-MEADOWS.com
License # 239813-C10

MORROW MEADOWS CORP.

RECORD DRAWING
DATE 02/22/03
JOB NUMBER 631027

AREA 4 | AREA 3
AREA 1 | AREA 2

FIRST FLOOR LIGHTING

ONTARIO POLICE HEADQUARTERS
2534 S. ARCHIBALD

date:	10/09/03	by:	N. OLIVER
scale:	1/8"=1'-0"	chk:	N. OLIVER
job#:	631027		
cad file:	VE_LIGHTING		
drawing no:	MM-E3.2		

ELEC. PANEL CP, 2P2 208/120v Elect. PANELS AF - BF - CF - EL - HF
" " LF 208/120v 480/277v

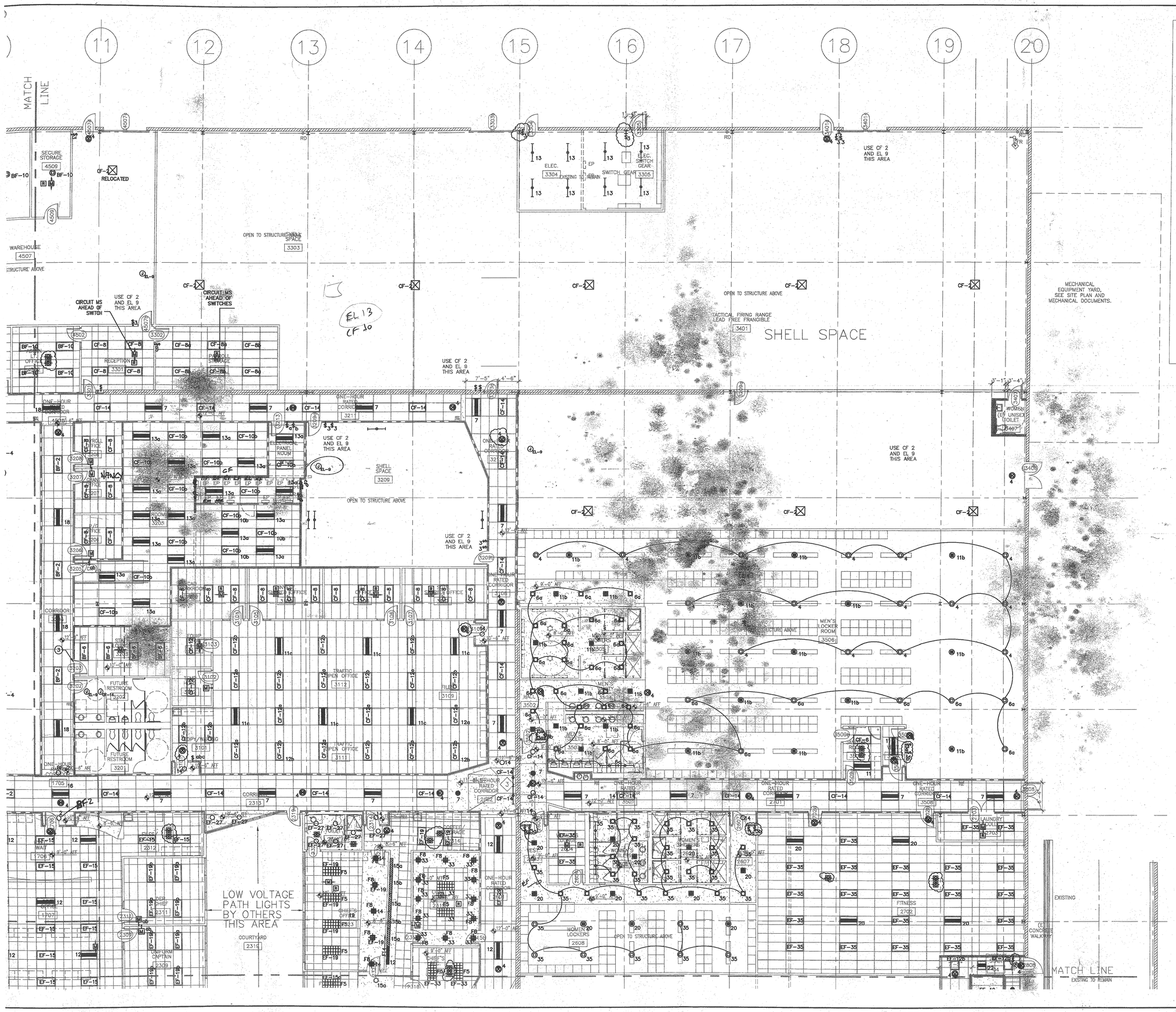

FIXTURE SCHEDULE

BBA	BBB
F5	LCP
BBC	F14
BBD	F18
BBF	SIGI
BBG	F8
BBH	F4
F23	F21
TEMP	DELRAY
	EXIST LIGHTS
	BLITZ

- CEILING MOUNTED MOTION SENSOR
- WALL MOUNTED MOTION SENSOR
- CEILING SENSOR RELAY
- ADDED CEILING MOUNTED MOTION SENSOR
- ADDED CEILING SENSOR RELAY

THIS DRAWING IS REPRESENTATIVE OF MORROW-MEADOWS INTERPRETATION OF RESPONSES TO BAYLEY RFI'S #183, 221, 222, 223, FIELD ORDER #13, THE CONTRACT DRAWINGS AND MORROW-MEADOWS CONTRACT VALUE ENGINEERED DRAWINGS. IT IN NO WAY IS INTENDED TO BE A COMPLETE REPRESENTATION OF THE END USERS NEEDS AND REQUIREMENTS. MORROW-MEADOWS ASSUMES NO RESPONSIBILITY FOR ENGINEERING OR DESIGN.

MORROW MEADOWS CORP.
RECORD DRAWING
DATE 02/22/03
JOB NUMBER 631027

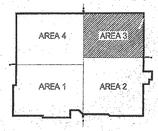

COORDINATION

	COORDINATION	SIGNATURE	DATE
	GENERAL CONTRACTOR		
	MECHANICAL (DUCT)		
	MECHANICAL (PIPE)		
	PLUMBING		
	ELECTRICAL		
	SPRINKLER		

NO	COMPILATION	BY
A	10/09/2003	

MORROW-MEADOWS CORP.
Group of Companies
"The Power of Ideas"

Morrow-Meadows Corp.
ELECTRICAL CONTRACTORS AND ENGINEERS
231 Benton Court
City of Industry, Ca. 91789
Telephone: (909) 598-7700
Fax: (909) 598-3907
www.MORROW-MEADOWS.com
License # 230813-C10

TITLE: FIRST FLOOR LIGHTING

ONTARIO POLICE HEADQUARTERS
2534 S. ARCHIBALD

date:	10/09/03	by: N. OLIVER
scale:	1/8"=1'-0"	chk: N. OLIVER
job#:	631027	
cad file:	VE_LIGHTING	
drawing no:	MM-E3.3	

RFI PENDING FOR SWITCHING IN THE 5 HOLDING CELLS

STA STORAGE

USE EXISTING?

S-3 OCCUPANCY UNDER SEPARATE REVIEW/PERMIT

SHELL OPEN TO STRUCTURE ABOVE 4308

FUTURE S-3 OCCUPANCY UNDER SEPARATE COVER/PERMIT

OPEN TO STRUCTURE ABOVE

REMOVE EXISTING DOCK LEVELER AND INFILL OPENING

THESE 2 DOCKS LEVELERS TO REMAIN INTACT AND IN WORKING CONDITION.

SHARED DOCK (EVID. & RECV.) 4613

ARCHIVES 4508

SECURE STORAGE 4509

WAREHOUSE 4507

RECEIVING AREA 4505

WORK AREA 4506

STAGING AREA 4506

ZIMA OFFICE

PURCHASING & CONTRACTING 4503

ADMIN. LT. OFFICE 4502

TEMP SWAT STG. 4605

SWAT OFFICE 4611

OFFICE AREA

AFTER HOURS EVIDENCE DROP 4612

FIREARMS STORAGE (HIGH DENSITY) 4618

RETRO STORAGE 4617

STORAGE 4616

DRUG EVIDENCE 4619

CENTRAL EVIDENCE STORAGE 4604

CENTRAL OPEN SPACE 4615

Electrical Panels

USE BF-4 AND/OR 18 THIS AREA

OPEN TO STRUCTURE ABOVE

MATCH LINE

MATCH LINE

JUVE. WAIT. 4210

MEN'S TOIL. 4212

WOMEN'S TOIL. 4211

RESPONSE WAITING 4208

COPY PRINT 4205

INT. 4202

PATROL OPEN OFFICE 4107

PATROL OPEN OFFICE 4106

PATROL OPEN OFFICE 4105

INT. 4103

RESERVES ROOM 1509

GANG SGT. 1512

HALL 1511

SUPPLIES STORAGE 1510

TEAMING 1514

COPS & GANGS OPEN OFFICE 1508

COPS & GANGS OPEN OFFICE 1507

PLANNING/ BRIEFING 1515

INT. 4602

INT. 4604

INT. 4605

SHIFT LT. 4109

SHIFT LT. 4111

SHIFT LT. 4112

SHIFT LT. 4113

INT. 4114

INT. 4114a

INT. 4116

INT. 4117

INT. 4118

INT. 4119

INT. 4120

INT. 4121

INT. 4122

INT. 4123

INT. 4124

INT. 4125

INT. 4126

INT. 4127

INT. 4128

INT. 4129

INT. 4130

INT. 4131

INT. 4132

INT. 4133

INT. 4134

INT. 4135

INT.

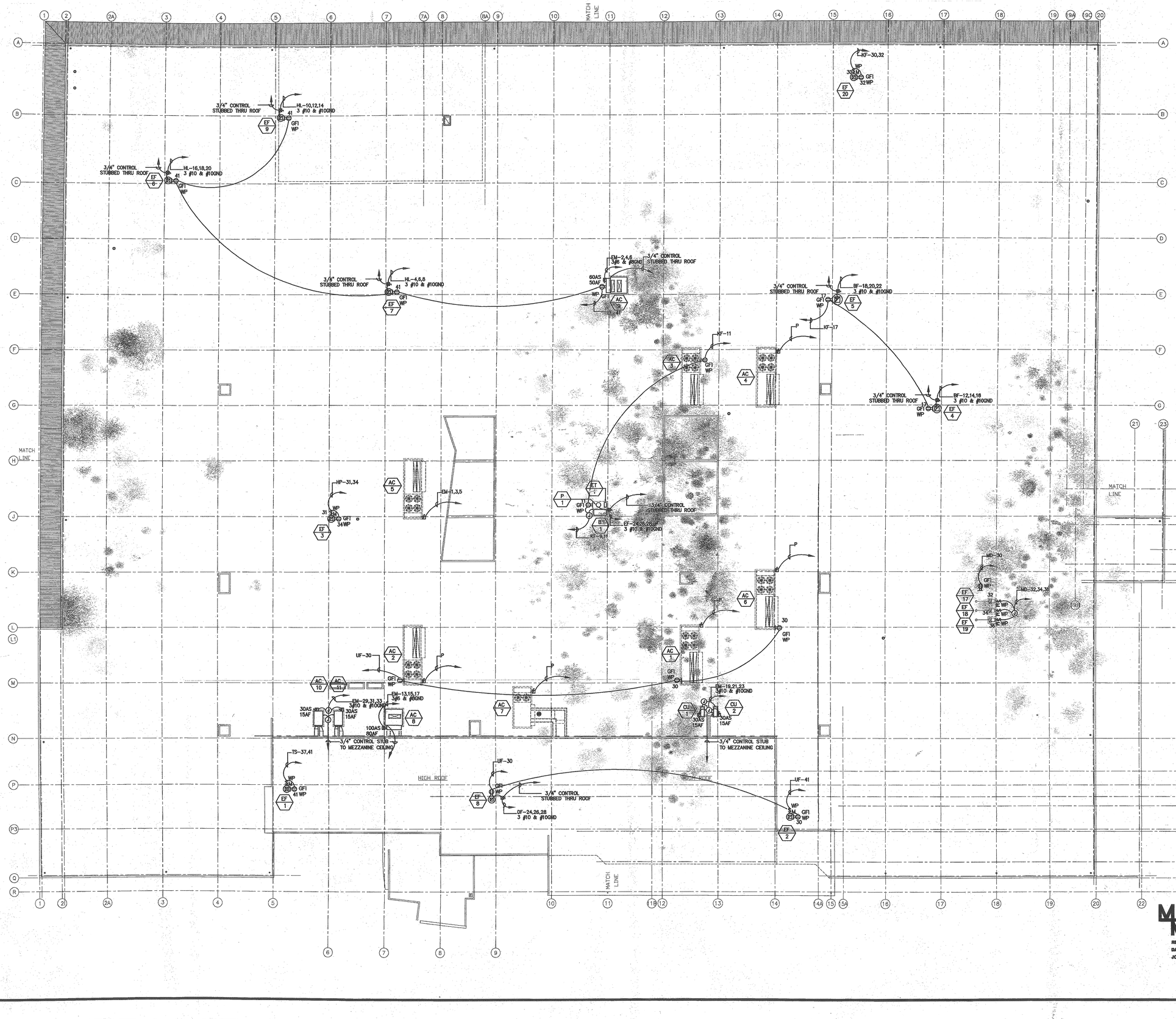

COORDINATION

	COORDINATION	SIGNATURE	DATE
GENERAL CONTRACTOR			
MECHANICAL (DOC2)			
MECHANICAL (PIPE)			
PLUMBING			
ELECTRICAL			
SPRINKLER			

	DESCRIPTION	DATE
F		
E		
D		
C		
B		
A		

MORROW-MEADOWS CORP.
Group of Companies
"The Power Behind It"

Morrow-Meadows Corporation
Electrical Contractors and Engineers
Lic. #379 Class C-10 & C-7
1733 Stanley Ave. Dallas, Oregon 97338
Phone: (503) 623-2307 Fax: (503) 623-2308
Morrow-Meadows Corporation
Electrical Contractors and Engineers
Lic. #379 Class C-10 & C-7
1733 Stanley Ave. Dallas, Oregon 97338
Phone: (503) 623-2307 Fax: (503) 623-2308
Morrow-Meadows Corp.
ELECTRICAL CONTRACTORS AND ENGINEERS
231 Baldwin Court
City of Industry, Ca. 91789
Telephone: (909) 598-7700
Fax: (909) 598-3907
www.MORROWMEADOWS.com
License # 230813-C10

ROOF POWER

POLICE HEADQUARTERS
2534 S. ARCHIBALD AVE. ONTARIO, CA 91761

date:	01-07-04
by:	N.O.
scale:	1/16"=1'-0"
chk:	
job#:	631027
cad file:	ROOF.dwg
drawing no:	MM-E4.0

MORROW MEADOWS CORP.

RECORD DRAWING
DATE 1/24/04
JOB NUMBER 631027

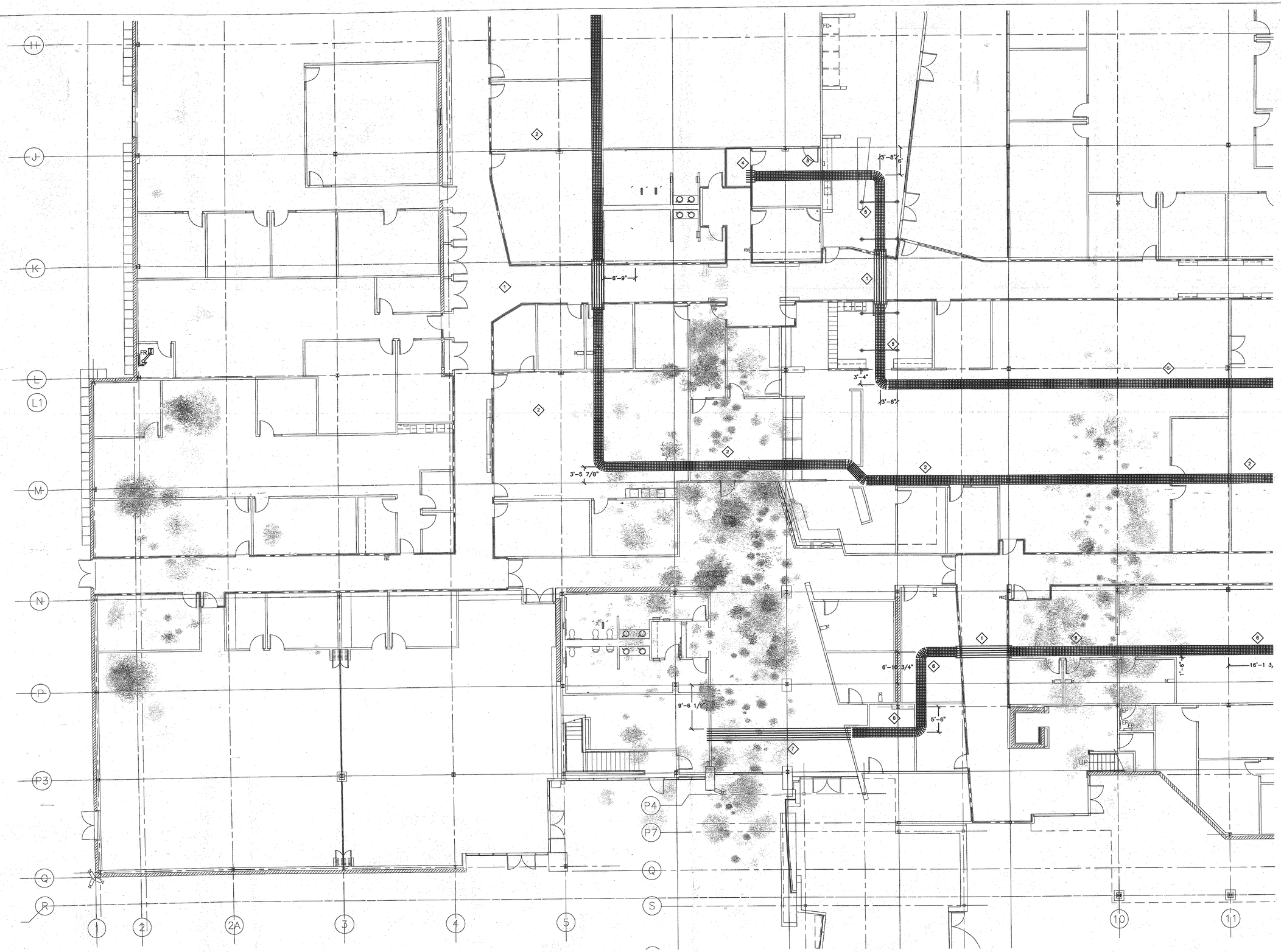

GENERAL SHEET NOTES

1. (6) 4"C. MOUNT TO TOP OF CORRIDOR. PROVIDE GROUND BUSHINGS ON BOTH ENDS TO BOND TRAY. RUN #2 BARE COPPER THROUGH GROUND BUSHINGS AND ATTACH TO CABLE TRAY WITH SPLIT BOLT.
2. 24" WIDE 4" HIGH CABLE TRAY MOUNTED AT +11'-0" AFF TO BOTTOM.
3. 24" WIDE 4" HIGH CABLE TRAY MOUNTED AT +11'-5" AFF TO BOTTOM.
4. (6) 4"C. SLEAVES THROUGH RATED WALL. STUB OUT 12" ON EACH SIDE AND FIRE SEAL.
5. 24" WIDE 4" HIGH CABLE TRAY MOUNTED AT +11'-10" AFF TO BOTTOM.
6. 24" WIDE 4" HIGH CABLE TRAY MOUNTED AT +10'-0" AFF TO BOTTOM.
7. (6) 4"C. MOUNTED AS TIGHT AS POSSIBLE TO UNDER SIDE OF MEZZANINE STRUCTURE. PROVIDE GROUND BUSHINGS ON BOTH ENDS TO BOND TRAY. RUN #2 BARE COPPER THROUGH GROUND BUSHINGS AND ATTACH TO CABLE TRAY WITH SPLIT BOLT.

MORROW MEADOWS CORP.

RECORD DRAWING
DATE 12/22/03
JOB NUMBER 631027

AREA 4 | AREA 3
AREA 1 | AREA 2

COORDINATION

	COORDINATION	SIGNATURE	DATE
GENERAL CONTRACTOR			
MECHANICAL (DUCT)			
MECHANICAL (PIPE)			
PLUMBING			
ELECTRICAL			
SPRINKLER			

	BY	DESCRIPTION
F		
E		
D		
C		
B		
A		

MORROW-MEADOWS CORP.
Group of Companies
"The Power Behind"

Morrow-Meadows Corporation
Electrical Contractors and Engineers
231 Bellmill Court, City of Industry, Ca. 91789
Telephone (909) 598-7700
Fax (909) 598-3907
www.MORROW-MEADOWS.com
License # 530613-C10

Morrow-Meadows Corp.
Electrical Contractors and Engineers
231 Bellmill Court,
City of Industry, Ca. 91789
Telephone (909) 598-7700
Fax (909) 598-3907
www.MORROW-MEADOWS.com
License # 530613-C10

Las Positas
Pleasanton, CA (925) 416-9160 Fax (925) 416-9161
Cherry City Electric Supply
Salem, OR (503) 581-1466 Fax (503) 581-1469
Morrow-Meadows Corp.
Las Vegas, NV (702) 736-6644 Fax (702) 736-6645
Morrow-Meadows Corp.
Rancho Cucamonga, CA (909) 987-0550 Fax (909) 987-5814
Morrow-Meadows Corp.
Bonney Lake, WA (253) 863-8833 Fax (253) 863-8834

TITLE: Cable Tray

ONTARIO
POLICE HEADQUARTERS

date:	06-13-03
by:	NO
scale:	1/8"=1'-0"
chk:	NO
job#:	631027
cad file:	Cable Tray.dwg
drawing no:	MM-E4.1



GENERAL SHEET NOTES

1. (6) 4"C. MOUNT TO TOP OF CORRIDOR. PROVIDE GROUND BUSHINGS ON BOTH ENDS TO BOND TRAY. RUN #2 BARE COPPER THROUGH GROUND BUSHINGS AND ATTACH TO CABLE TRAY WITH SPLIT BOLT.
2. 24" WIDE 4" HIGH CABLE TRAY MOUNTED AT +11'-0" AFF TO BOTTOM.
3. 24" WIDE 4" HIGH CABLE TRAY MOUNTED AT +11'-5" AFF TO BOTTOM.
4. (6) 4"C. SLEAVES THROUGH RATED WALL. STUB OUT 12" ON EACH SIDE AND FIRE SEAL.
5. 24" WIDE 4" HIGH CABLE TRAY MOUNTED AT +11'-10" AFF TO BOTTOM.
6. 24" WIDE 4" HIGH CABLE TRAY MOUNTED AT +10'-0" AFF TO BOTTOM.
7. RUN (6) 4"C. UP FROM LOWER MEZZANINE CEILING BETWEEN FIRE CORRIDOR WALL AND MEZZANINE STEEL. 90 ON TOP OF FIRE CORRIDOR. FINNISH SIMILAR TO NOTE 1.

MORROW MEADOWS CORP.
RECORD DRAWING
DATE 12/22/03
JOB NUMBER 631027

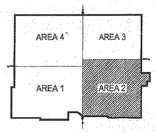

COORDINATION

	COORDINATION	SIGNATURE	DATE
GENERAL CONTRACTOR			
MECHANICAL (DUCT)			
MECHANICAL (PIPE)			
PLUMBING			
ELECTRICAL			
SPRINKLER			

| | | |



GENERAL SHEET NOTES

1. (6) 4"C. MOUNT TO TOP OF CORRIDOR. PROVIDE GROUND BUSHINGS ON BOTH ENDS TO BOND TRAY. RUN #2 BARE COPPER THROUGH GROUND BUSHINGS AND ATTACH TO CABLE TRAY WITH SPLIT BOLT.
2. 24" WIDE 4" HIGH CABLE TRAY MOUNTED AT +11'-0" AFF TO BOTTOM.
3. 24" WIDE 4" HIGH CABLE TRAY MOUNTED AT +11'-5" AFF TO BOTTOM.
4. (6) 4"C. SLEAVES THROUGH RATED WALL. STUB OUT 12" ON EACH SIDE AND FIRE SEAL.

COORDINATION

	DATE	SIGNATURE	BY
COORDINATION			
GENERAL CONTRACTOR			
MECHANICAL (DUCT)			
MECHANICAL (PIPE)			
PLUMBING			
ELECTRICAL			
SPRINKLER			

F E D C B A COORDINATION

MORROW-MEADOWS CORP.
Great Companies

Morrow-Meadows Corporate
Electrical Contractors and Engineers
Riverside, CA (951) 682-7720
Sacramento, CA (916) 638-2077
Orange County, CA (949) 250-0982
San Diego, CA (858) 560-1161
Las Vegas, NV (702) 365-1161
Phoenix, AZ (602) 437-1161
Tucson, AZ (520) 889-1161
Albuquerque, NM (505) 345-1161
Las Cruces, NM (505) 523-1161
El Paso, TX (915) 833-1161
Denver, CO (303) 371-1161
Seattle, WA (425) 251-1161
Portland, OR (503) 620

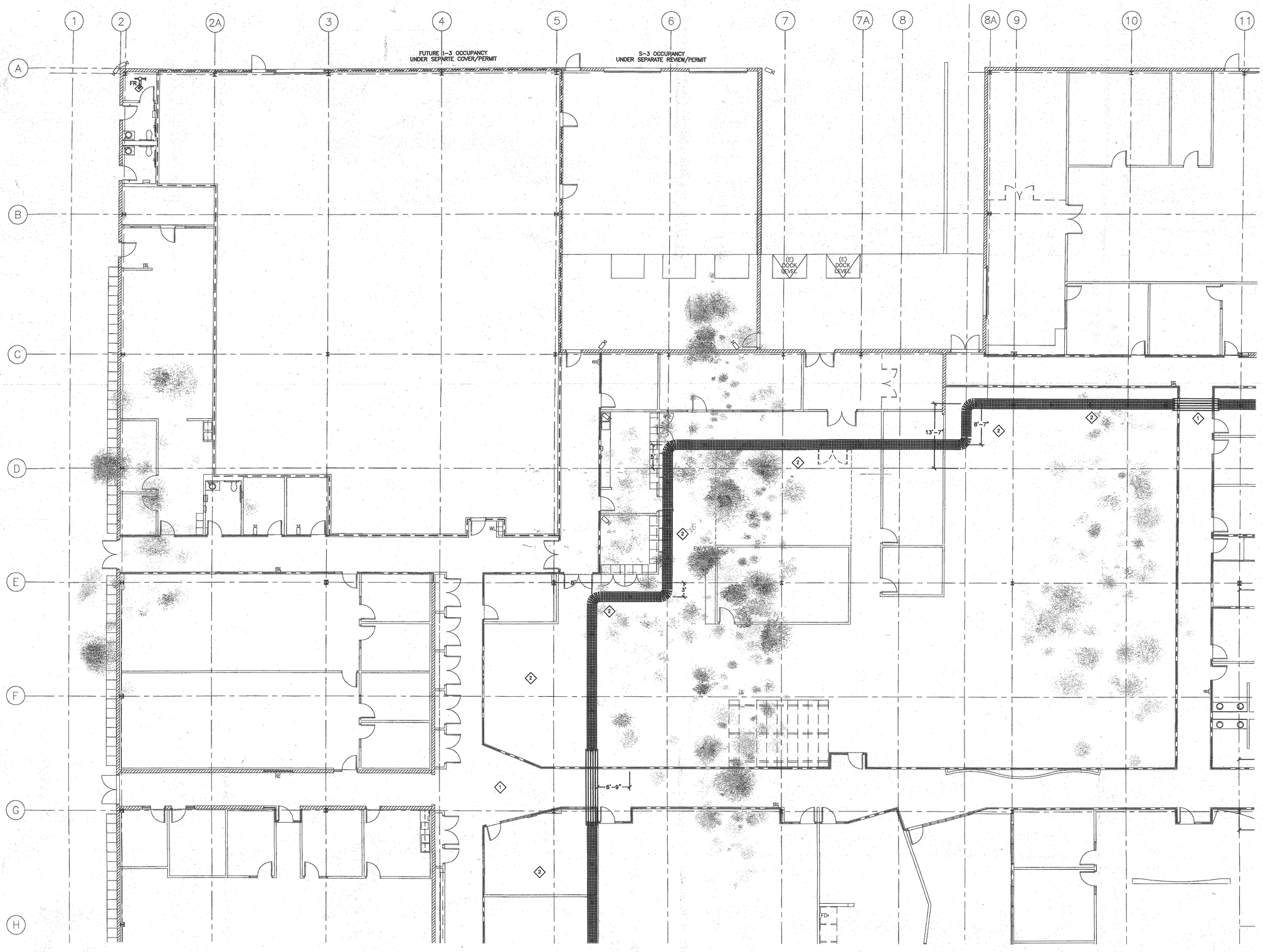

GENERAL SHEET NOTES

1. (6) 4"C. MOUNT TO TOP OF CORRIDOR. PROVIDE GROUND BUSHINGS ON BOTH ENDS TO BOND TRAY. RUN #2 BARE COPPER THROUGH GROUND BUSHINGS AND ATTACH TO CABLE TRAY WITH SPLIT BOLT.
2. 24" WIDE 4" HIGH CABLE TRAY MOUNTED AT +11'-0" AFF TO BOTTOM.

MORROW MEADOWS CORP.

RECORD DRAWING
DATE 12/22/03
JOB NUMBER 631027

AREA 4 | AREA 3
AREA 1 | AREA 2

COORDINATION

COORDINATION	SIGNATURE	DATE
GENERAL CONTRACTOR		
MECHANICAL (DUCT)		
MECHANICAL (PIPE)		
PLUMBING		
ELECTRICAL		
SPRINKLER		

F			
E			
D			
C			
B			
A			
		DESCRIPTION	BY



MORROW-MEADOWS CORP.
Design-Build Contractors

Morrow-Meadows Corp.
ELECTRICAL CONTRACTORS AND ENGINEERS
231 Benton Court
City of Industry, Ca. 91789
Telephone: (909) 598-7700
Fax: (909) 598-3807
www.MORROW-MEADOWS.com
License # 230813-C10

Cable tray

ONTARIO
POLICE HEADQUARTERS

date: 06-13-03	by: NO
scale: 1/8"=1'-0"	chk: NO
job#: 631027	
cad file: Cable Tray.dwg	
drawing no: MM-E4.4	



MORROW MEADOWS CORP.

RECORD DRAWING
DATE 12-08-03
JOB NUMBER 631027

COORDINATION

COORDINATION	SIGNATURE	DATE
GENERAL CONTRACTOR		
MECHANICAL (DUCT)		
MECHANICAL (PIPE)		
PLUMBING		
ELECTRICAL		
SPRINKLER		

	DATE	DESCRIPTION	BY
F			
E			
D			
C			
B			
A			

MORROW-MEADOWS CORP.
Group of Companies
The Power Broker

Morrow-Meadows Corp.
ELECTRICAL CONTRACTORS AND ENGINEERS
231 Benton Court
City of Industry, Ca. 91789
Telephone (909) 598-7700
Fax: (909) 598-3907
www.MORROW-MEADOWS.com
License #: 230813-C10

TITLE: OVERHEAD FEEDER CONDUIT

ONTARIO
POLICE HEADQUARTERS
2534 S. ARCHIBALD AVE. ONTARIO, CA 91761

date:	12-08-03	by:	NO
scale:	1/8"=1'-0'	chk:	NO
job#:	631027		
cad file:	OH_ConduitR1.dwg		
drawing no:	MM-E4.5		

COORDINATION			
COORDINATION	SIGNATURE		DATE
GENERAL CONTRACTOR			
MECHANICAL (DUCT)			
MECHANICAL (PIPE)			
PLUMBING			
ELECTRICAL			
SPRINK.FIR.			

BY	DESCRIPTION	DATE
A		
B		
C		
D		
E		
F		

MORROW-MEADOWS CORP.
GENERAL CONTRACTORS

Morrow-Meadows Corp.
ELECTRICAL CONTRACTORS AND ENGINEERS
231 Benton Court
City of Industry, Ca. 91789
Telephone: (909) 598-7700
Fax: (909) 598-3907
www.MORROW-MEADOWS.com
License #: 230813-C10

TITLE: OVERHEAD FEEDER CONDUIT
ONTARIO
POLICE HEADQUARTERS
2534 S. ARCHIBALD AVE. ONTARIO, CA 91761

date:	12-09-03
scale:	1/8"=1'-0"
proj#:	631027
cad file:	OH_ConduitRT.dwg
drawing no:	MM-E4.6

MORROW MEADOWS CORP.
RECORD DRAWING
DATE 12-09-03
JOB NUMBER 631027

AREA 3 | AREA 2
AREA 4 | AREA 1

SPAN BEAMS ABOVE, DROP 2FT WIDE RACK DOWN,TYP. OF 5

6X6X24 GUTTER

6X6X24 GUTTER

1-1/2" PB TO NF (4)#2 & #8 GND

6'-9 3/4"

23'-4"

10X10X4

5'-0"

4'-1 5/8"

4'-5 1/8"

6'-10 7/8"

1'-11 7/8"

3'-4 3/4"

14'-8 1/8"

6'-9"

2'-9"

2'-6"

2'-0"

10X10X4 &12X12X4

12X12X6 OVER EXISTING STUB OUT

90° UP TO 16'6" IN THIS GAP

EXISTING

PB TO

EF-CS-DS

(2) 1-1/4" EDP TO UPS (4)#1 & #8 GND
(1) 1-1/4" EDP TO UPS (4)#1 & #8 GND
2" P TO EF (4)#1/0 & #8 GND

(2) 1-1/4" EDP TO UPS (4)#1 & #8 GND
(1) 1-1/4" EDP TO UPS (4)#1 & #8 GND
2" PD TO MDP (4)#4/0 & #6 GND
2" PD TO MDP (4)#4/0 & #6 GND
2" PD TO TS (4)#2/0 & #6

11 12 13 14 15 16 17 18 19 19A 19C 20

A B C D E F G

SECURE STORAGE 4509
WAREHOUSE 4507
ADMIN LT. OFFICE 4502
RECEPTION 3301
PAYROLL STORAGE 3302
ONE-HOUR RATED CORRIDOR 4501
ONE-HOUR RATED CORRIDOR 3211
PAYROLL OFFICE 3208
GRANT OFFICE 3207
COMPUTER ROOM 3205
P/C OFFICE 3206
SHELL SPACE 3209
ONE-HOUR RATED CORRIDOR 3212
CAD WORKROOM 3104
INVEST. SHARED OFFICE 3105
LT. OFFICE 3106
SGTS. SHARED OFFICE 3107
ONE-HOUR RATED CORRIDOR 3108
CORRIDOR 3204
STAFF LOUNGE 3203
EQUIP STOR 3103
TEMP HOLD 3102
FUTURE RESTROOM 3202
FUTURE RESTROOM 3201
COPY/WAITING 3101
TRAFFIC OPEN OFFICE 3112
FILES 3109
TRAFFIC OPEN OFFICE 3111
ONE-HOUR RATED CORRIDOR 1705
CORRIDOR 2313
ONE-HOUR RATED CORRIDOR 2602
EXEC. WAIT 1706
FILES/COPY 2312
TOILET 2321
COFFEE/STORAGE 2314
OPEN OFFICE 1707
DEP. CHIEF 2311
CHIEF'S OFFICE 2323
CONF. ROOM 2315
COURTYARD 2319
UNIFORM CAPTAIN 2309
CHIEF'S SEC. 2316
ONE-HOUR RATED CORRIDOR 2601
HALL 3502
MEN'S SHOWERS 3505
MEN'S VANITY 3504
MEN'S TOILETS 3503
ONE-HOUR RATED CORRIDOR 3501
WOMEN'S LOUNGE 2604
WOMEN'S TOILETS 2605
WOMEN'S SHOWERS 2606
VEST. 2603
VEST. 2607
WOMEN'S LOCKERS 2608
MEN'S LOCKER ROOM 3506
JANITOR ROOM 3509
VEST. 3507
ONE-HOUR RATED CORRIDOR 2701
ONE-HOUR RATED CORRIDOR 3508
LAUNDRY COLL. 2703
FITNESS 2702
(E) UNISEX TOILET 3407
MECHANICAL EQUIPMENT YARD, SEE SITE PLAN AND MECHANICAL DOCUMENTS.
TACTICAL FIRING RANGE LEAD FREE FRANGIBLE 3401
EXISTING
(E) CONCRETE WALKWAY
EXISTING STAIR 04 UP 2808

OPENING IN BLOCK WALL
CORES IN BLOCK WALL
6X6X24 GUTTER
6X6X24 GUTTER

W-E +16'-1"
3" PA TO LF (4)#1/0 & #6 GND
3" EDP TO EM (3)500MCM & #1/0 GND
2" PA TO MF (4)#1/0 & #6 GND
2.5" PA TO GF (4)#3/0 & #6 GND
2" PT TO HL (4)#1/0 & #6 GND
2.5" PA TO HP (4)#2/0 & #6 GND
1" EDP TO EPT (3)#4 & #10 GND
2" EDP TO UPS (4)#2/0 & #4 GND
2" EDP TO UPS (4)#2/0 & #4 GND
3" 150A ATS TO EL (4) #350 & & #2 GND

DIST "PA"
DIST "P"
EDP
18X18X6 J-BOX 3304
ELEC. SWITCH GEAR 3305
(2)3"C. (4)#500 & #1/0 GND
3"C. (4)#350 & #2 GND
KF
S-N ON EXISTING RACK
1-1/4" EDP TO UPS (4)#1 & #6 GND
1-1/4" EDP TO UPS (4)#1 & #6 GND
2" P TO EF (4)#1/0 & #6 GND
3"C. (4) #350 & #2
18X18X6
1-1/2" PB TO MF (4)#2 & #6 GND
S-N
2.5" PD TO MLP1 (4)#250MCM & #6 GND
2.5" PD TO MLP2 (4)#4/0 & #6 GND
WLP1-1
WLP1-2
2.5" PK TO WLP1 (4)#4/0 & #6 GND
MLP1-1
MLP1-2
MLP2-1
MLP2-2

21'-7"
16'-9"
2'-7 1/8"
3'-6"
4'-11"
4'-4"
1'-10"
4'-2"

AREA 4 AREA 3 AREA 1 AREA 2

MORROW MEADOWS CORP.
RECORD DRAWING
DATE 12-08-03
JOB NUMBER 631027

COORDINATION

	COORDINATION	SIGNATURE	DATE
GENERAL CONTRACTOR			
MECHANICAL (DUCT)			
MECHANICAL (PIPE)			
PLUMBING			
ELECTRICAL			
SPRINKLER			

	DESCRIPTION	DATE
F		
E		
D		
C		
B		
A		

MORROW-MEADOWS CORP.
Group of Companies
Partnership

Morrow-Meadows Corporation
Manufacturers of Electrical Distribution Equipment
231 Benton Court, City of Industry, CA 91789-3070
Telephone (909) 598-7708 Fax (909) 598-3807
Toll Free (800) 854-8822
Web Site www.morrow-meadows.com
Email info@morrow-meadows.com

Morrow-Meadows Corp.
ELECTRICAL CONTRACTORS AND ENGINEERS
231 Benton Court
City of Industry, Ca. 91789
Telephone (909) 598-7708
Fax (909) 598-3807
www.MORROW-MEADOWS.com
License # 236813 C-10

OVERHEAD FEEDER CONDUIT

ONTARIO
POLICE HEADQUARTERS
2534 S. ARCHIBALD AVE. ONTARIO, CA 91761

mm.c	
date: 12-08-03	by: NO
scale: 1/8"=1'-0"	chk: NO
job#: 631027	
cad file: OH_ConduitR1.dwg	
drawing no: MM-E4.7	

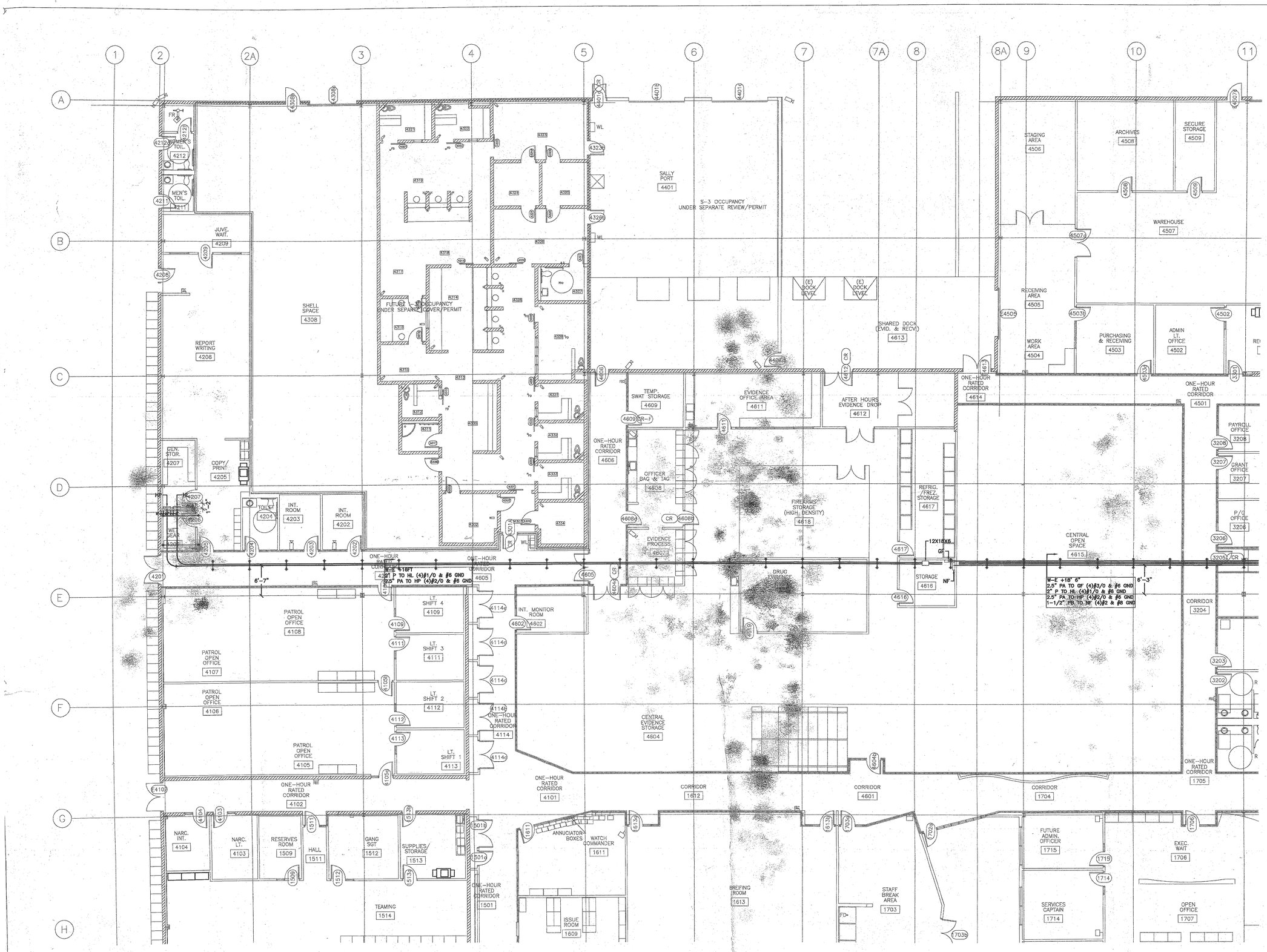

MORROW MEADOWS CORP.

RECORD DRAWING
DATE 12-08-03
JOB NUMBER 631027

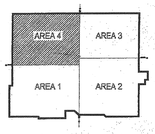

COORDINATION

COORDINATION	SIGNATURE	DATE
GENERAL CONTRACTOR		
MECHANICAL (DUCT)		
MECHANICAL (PIPE)		
PLUMBING		
ELECTRICAL		
SPRINKLER		

QUE	DESCRIPTION	BY
F		
E		
D		
C		
B		
A		

MORROW MEADOWS CORP.
Group of Companies
"The Best Of Each"

Morrow-Meadows Corp.
ELECTRICAL CONTRACTORS AND ENGINEERS
231 Benton Court
City of Industry, Ca. 91789
Telephone: (909) 598-7700
Fax: (909) 598-3907
www.MORROW-MEADOWS.com
License #: 230813-C10

TITLE: OVERHEAD FEEDER CONDUIT

ONTARIO
POLICE HEADQUARTERS
2534 S. ARCHIBALD AVE, ONTARIO, CA 91761

date:	12-08-03	by:	NO
scale:	1/8"=1'-0"	chk:	NO
job#:	631027		
cad file:	OH_ConduitR1.dwg		
drawing no:	MM-E4.8		

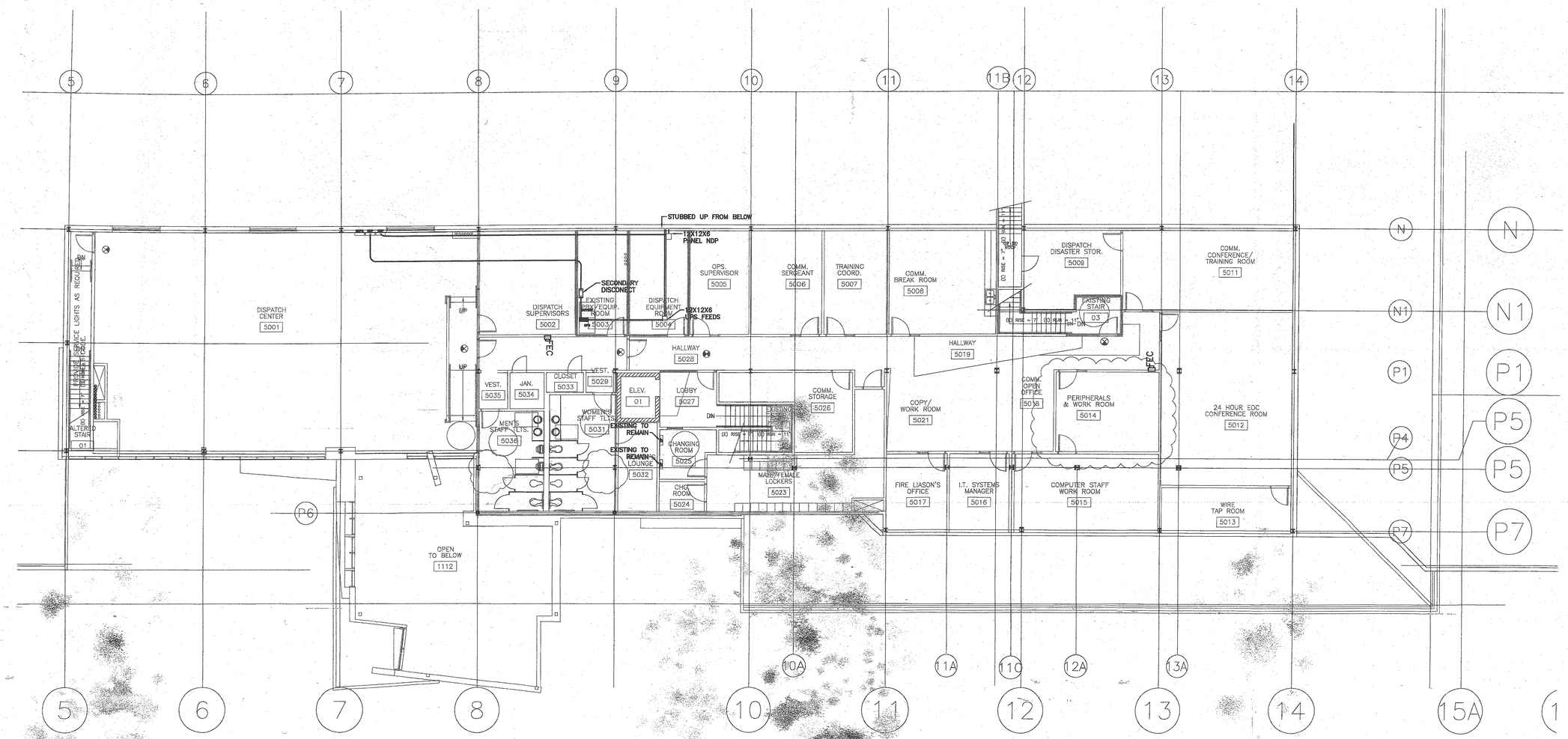
STUBBED UP FROM BELOW
13X12X6 PANEL NDP
SECONDARY DISCONNECT
EXISTING PBX/EQUIP. ROOM 5003
DISPATCH EQUIPMENT ROOM 5004
12X12X6 UPS FEEDS
DISPATCH CENTER 5001
DISPATCH SUPERVISORS 5002
OPS. SUPERVISOR 5005
COMM. SERGEANT 5006
TRAINING COORD. 5007
COMM. BREAK ROOM 5008
DISPATCH DISASTER STOR. 5009
COMM. CONFERENCE/ TRAINING ROOM 5011
EXISTING STAIR 03
HALLWAY 5028
HALLWAY 5019
VEST. 5035
JAN. 5034
CLOSET 5033
VEST. 5029
ELEV. 01
LOBBY 5027
COMM. STORAGE 5026
COMM. OPEN OFFICE 5030
PERIPHERALS & WORK ROOM 5014
24 HOUR EOC CONFERENCE ROOM 5012
COPY/ WORK ROOM 5021
MEN'S STAFF TLTS. 5036
WOMEN'S STAFF TLTS. 5031
EXISTING TO REMAIN
EXISTING TO REMAIN'S LOUNGE 5032
CHANGING ROOM 5025
CHG. ROOM 5024
MALE/FEMALE LOCKERS 5023
FIRE LIASON'S OFFICE 5017
I.T. SYSTEMS MANAGER 5016
COMPUTER STAFF WORK ROOM 5015
WIRE TAP ROOM 5013
ALTERED STAIR 01
OPEN TO BELOW 1112
EXISTING STAIR 01
EXISTING STAIR 02
EXISTING STAIR 04
EXISTING STAIR 05
EXISTING STAIR 06
EXISTING STAIR 07
EXISTING STAIR 08
EXISTING STAIR 09
EXISTING STAIR 10
EXISTING STAIR 11
EXISTING STAIR 12
EXISTING STAIR 13
EXISTING STAIR 14
EXISTING STAIR 15
EXISTING STAIR 16
EXISTING STAIR

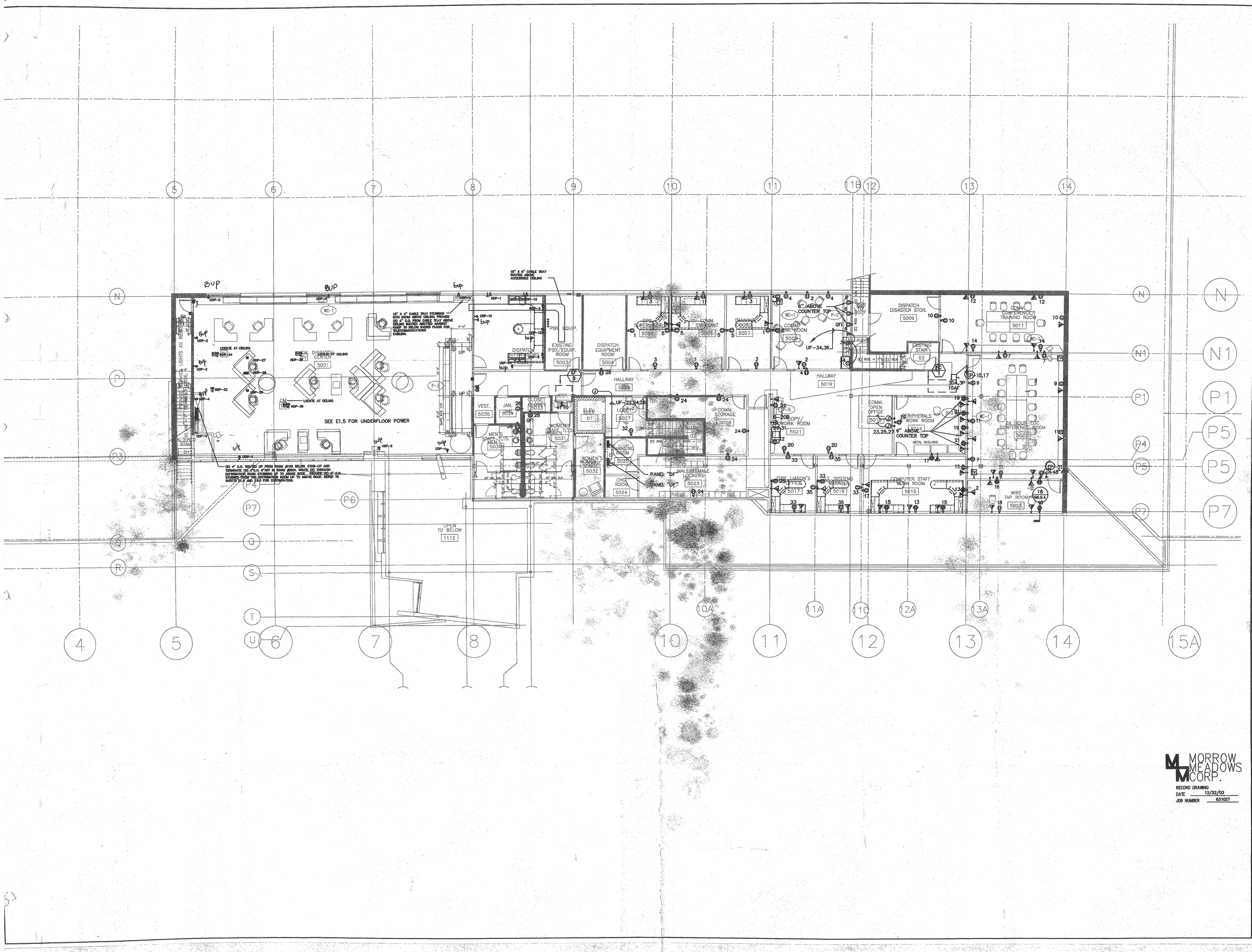

MORROW MEADOWS CORP.

RECORD DRAWING
DATE 12/22/03
JOB NUMBER 631027

REV.	DATE	DESCRIPTION	BY
A	10/09/2003	COMPILATION	NO
B			
C			
D			
E			
F			

COORDINATION

COORDINATION	SIGNATURE	DATE
GENERAL CONTRACTOR		
MECHANICAL (DUCT)		
MECHANICAL (PIPE)		
PLUMBING		
ELECTRICAL		
SPRINKLER		

MORROW MEADOWS CORP.
Group of Companies
The Power Group

Morrow-Meadows Corp.
ELECTRICAL CONTRACTORS AND ENGINEERS
231 Benton Court
City of Industry, Ca. 91789
Telephone: (909) 598-7700
Fax: (909) 598-3907
www.MORROW-MEADOWS.com
License #: 230813-C10

TITLE: MEZZANINE POWER

ONTARIO POLICE HEADQUARTERS
2534 S. ARCHIBALD

date:	10/09/03	by:	N. OLIVER
scale:	1/8"=1'-0'	chk:	N. OLIVER
job#:	631027		
cad file:	Power.dwg		
drawing no:	MM-E7.1		

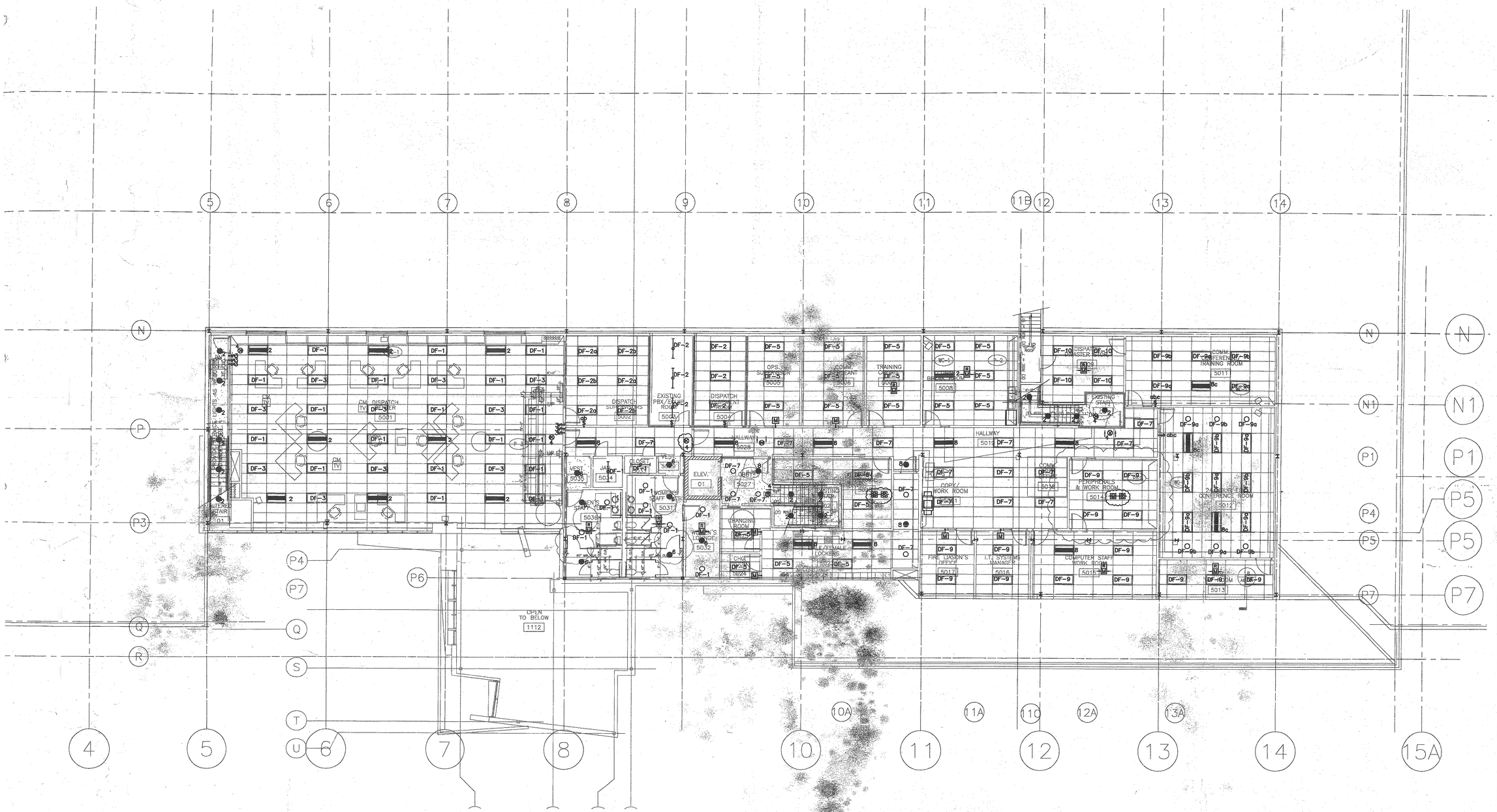

FIXTURE SCHEDULE

BBA		BBB	
F5		LCP	
BBC		F14	
BBD		F18	
BBF		SIGI	
BBG		F8	
BBH		F4	
F23		F21	
TEMP		DELRAY	

EXIST. LIGHTS

BLITZ

M CEILING MOUNTED MOTION SENSOR

M WALL MOUNTED MOTION SENSOR

R CEILING SENSOR RELAY

ADDED CEILING MOUNTED MOTION SENSOR

ADDED CEILING SENSOR RELAY

THIS DRAWING IS REPRESENTATIVE OF MORROW–MEADOWS INTERPRETATION OF RESPONSES TO BAYLEY RFI'S #183, 221, 222, 223, FIELD ORDER #13, THE CONTRACT DRAWINGS AND MORROW–MEADOWS CONTRACT VALUE ENGINEERED DRAWINGS. IT IN NO WAY IS INTENDED TO BE A COMPLETE REPRESENTATION OF THE END USERS NEEDS AND REQUIREMENTS. MORROW–MEADOWS ASSUMES NO RESPONSIBILITY FOR ENGINEERING OR DESIGN.

MORROW MEADOWS CORP.

RECORD DRAWING
DATE 02/22/03
JOB NUMBER 631027

COORDINATION

COORDINATION	SIGNATURE	DATE
GENERAL CONTRACTOR		
MECHANICAL (DUCT)		
MECHANICAL (PIPE)		
PLUMBING		
ELECTRICAL		
SPRINKLER		

NO	BY	DATE	DESCRIPTION
A		10/09/2003	COMPILATION
B			
C			
D			
E			
F			

MORROW-MEADOWS CORP.
Group of Companies
"The Powerful Name"

Morrow-Meadows Corporation
Mailing/Shipping 2331 Benson Court, City of San Diego, CA 92154
Mailing/Shipping 2331 Benson Court, San Diego, CA 92154
Ship Direct To: Attn: Ron Phillips
Job Site: Attn: Jim Bayley
Phone: (909) 598-9788
Fax: (909) 598-3967
Email: MORROWMEADOWS@cox.net
Web: www.MORROWMEADOWS.com
Contractor's License #630813-C10

Morrow-Meadows Corp.
ELECTRICAL CONTRACTORS AND ENGINEERS
2331 Benson Court
San Diego, CA 92154
Telephone: (909) 598-9788
Fax: (909) 598-3967
www.MORROWMEADOWS.com
License #630813-C10

MEZZANINE LIGHTING

ONTARIO POLICE HEADQUARTERS
2534 S. ARCHIBALD

date:	10/09/03	by:	N. OLIVER
scale:	1/8"=1'-0"	chk:	N. OLIVER
job#:	631027		
cad file:	VE_LIGHTING		
drawing no:	MM-E8.1		

PANEL: MLP1 | VOLTAGE: 208 /120V, 3-PH, 4W | BUS SIZE: 225A | MAIN: 225A/3P M.C.B.
LOCATION:MENS LOCKER ROOM | MOUNTING: SURFACE | A/C RATING: 20,000A | FEED: TOP X BOTTOM
CIRCUIT CODE: blank or R: NON-CONTINUOUS L: LONG-CONTINUOUS R :REMAINABLE RECEPT'S N: KITCHEN P: PANEL U-UNIT

ITEM	CODE	BKR	CKT	A	B	C	CKT	BKR	CODE	ITEM
SECTION #1										
	R	20/1	1	1080			20/1	R		LOCKER #S 210 THRU 215 RECEPT.
				1080			2			
	R	20/1	3		1080		20/1	R		LOCKER #S 204 THRU 209 RECEPT.
					1080		4			
	R	20/1	5			1080	20/1	R		LOCKER #S 198 THRU 203 RECEPT.
						1080	6			
	R	20/1	7	1080			20/1	R		LOCKER #S 175 THRU 180 RECEPT.
				1080			8			
	R	20/1	9		1080		20/1	R		LOCKER #S 169 THRU 174 RECEPT.
					1080		10			
	R	20/1	11			1080	20/1	R		LOCKER #S 164 THRU 168 RECEPT.
						1080	12			
	R	20/1	13	1080			20/1	R		LOCKER #S 139 THRU 145 RECEPT.
				1080			14			
	R	20/1	15		1080		20/1	R		LOCKER #S 144 THRU 149 RECEPT.
					1080		16			
	R	20/1	17			1080	20/1	R		LOCKER #S 138 THRU 143 RECEPT.
						1080	18			
LOCKER #S 1 THRU 6 RECEPT.	R	20/1	19	1080			20/1	R		LOCKER #S 125 THRU 130 RECEPT.
				1080			20			
LOCKER #S 7 THRU 14 RECEPT.	R	20/1	21		1080		20/1	R		LOCKER #S 119 THRU 124 RECEPT.
					1080		22			
LOCKER #S 15 THRU 22 RECEPT.	R	20/1	23			1080	20/1	R		LOCKER #S 114 THRU 118 RECEPT.
						1080	24			
LOCKER #S 235 THRU 245 RECEPT.	R	20/1	25	1080			20/1	R		LOCKER #S 100 THRU 105 RECEPT.
				1080			26			
LOCKER #S 246 THRU 253 RECEPT.	R	20/1	27		1080		20/1	R		LOCKER #S 94 THRU 98 RECEPT.
					1080		28			
LOCKER #S 254 THRU 264 RECEPT.	R	20/1	29			1080	20/1	R		LOCKER #S 89 THRU 93 RECEPT.
						1080	30			
LOCKER #S 224 THRU 230 RECEPT.	R	20/1	31	1080			20/1	R		LOCKER #S 75 THRU 80 RECEPT.
				1080			32			
LOCKER #S 231 THRU 237 RECEPT.	R	20/1	33		1080		20/1	R		LOCKER #S 69 THRU 74 RECEPT.
					1080		34			
SPARE	R	20/1	35			1080	20/1	R		LOCKER #S 64 THRU 68 RECEPT.
						1080	36			
SPARE	R	20/1	37	1080			20/1	R		LOCKER #S 51 THRU 56 RECEPT.
				1080			38			
SPARE	R	20/1	39		1080		20/1	R		LOCKER #S 45 THRU 50 RECEPT.
					1080		40			
SPARE	R	20/1	41			1080	20/1	R		LOCKER #S 40 THRU 44 RECEPT.
						1080	42			
SECTION #2										
SPARE	R	20/1	43	1080			20/1	R		LOCKER #S 34 THRU 38 RECEPT.
				1080			44			
SPARE	R	20/1	45		1080		20/1	R		LOCKER #S 28 THRU 33 RECEPT.
					1080		46			
SPARE	R	20/1	47			1080	20/1	R		LOCKER #S 19 THRU 44 RECEPT.
						1080	48			
SPARE	R	20/1	49	1080			20/1	R		SPARE
				1080			50			
SPARE	R	20/1	51		1080		20/1	R		SPARE
					1080		52			
SPARE	R	20/1	53			1080	20/1	R		SPARE
						1080	54			
SPARE	R	20/1	55	1080			20/1	R		SPARE
				1080			56			
SPARE		20/1	57		1080		20/1	R		SPARE
					1080		58			
SPARE		20/1	59			1080	20/1	R		SPARE
						1080	60			
SPARE		20/1	61	1080			20/1	R		SPARE
				1080			62			
SPARE		20/1	63		1080		20/1			SPARE
					1080		64			
SPARE		20/1	65			1080	20/1			SPARE
						1080	66			
SPARE		20/1	67	1080			20/1			SPARE
				1080			68			
SPARE		20/1	69		1080		20/1			SPARE
					1080		70			
SPARE		20/1	71			1008	20/1			SPARE
						1008	72			
SPARE		20/1	73				20/1			SPARE
							74			
SPARE		20/1	75			1080	20/1			SPARE
						1080	76			
SPARE		20/1	77				20/1			SPARE
							78			
BUSSED SPACE			79							BUSSED SPACE
							80			
BUSSED SPACE			81							BUSSED SPACE
							82			
BUSSED SPACE			83							BUSSED SPACE
							84			

CONN. VA PHASE A	29929	CONN. VA (CODE H)	13868	DEMAND KVA	50.3
CONN. VA PHASE B	25920	CONN. VA (CODE L)	0	DEMAND AMPS	130.7
CONN. VA PHASE C	24760	CONN. VA (CODE R)	63940	CONN. AMPS	212.0
TOTAL CONN. VA	76608	CONN. VA (CODE X)	0	HIGH PH AMPS/LCL	172.2

PANEL NOTES:

PANEL: MLP2 | VOLTAGE: 208 /120V, 3-PH, 4W | BUS SIZE: 225A | MAIN: 225A/3P M.C.B.
LOCATION:MENS LOCKER ROOM | MOUNTING: SURFACE | A/C RATING: 20,000A | FEED: TOP X BOTTOM
CIRCUIT CODE: blank or R: NON-CONTINUOUS L: LONG-CONTINUOUS R :REMAINABLE RECEPT'S N: KITCHEN P: PANEL U-UNIT

ITEM	CODE	BKR	CKT	A	B	C	CKT	BKR	CODE	ITEM
SECTION #1										
LOCKER #S 57 THRU 63 RECEPT.	R	20/1	1	1080			20/1	R		SPARE
				1080			2			
LOCKER #S 81 THRU 88 RECEPT.	R	20/1	3		1080		20/1	R		SPARE
					1080		4			
LOCKER #S 106 THRU 113 RECEPT.	R	20/1	5			1080	20/1	R		SPARE
						1080	6			
LOCKER #S 131 THRU 138 RECEPT.	R	20/1	7	1080			20/1	R		SPARE
				1080			8			
LOCKER #S 156 THRU 163 RECEPT.	R	20/1	9		1080		20/1	R		SPARE
					1080		10			
LOCKER #S 181 THRU 188 RECEPT.	R	20/1	11			1080	20/1	R		SPARE
						1080	12			
LOCKER #S 206 THRU 223 RECEPT.	R	20/1	13	1080			20/1	R		SPARE
				1080			14			
LOCKER #S 189 THRU 193 RECEPT.	R	20/1	15		1080		20/1	R		SPARE
					1080		16			
LOCKER #S 194 THRU 198 RECEPT.	R	20/1	17			1080	20/1	R		SPARE
						1080	18			
SPARE	R	20/1	19				20/1	R		SPARE
				1080			20			
SPARE	R	20/1	21		1080		20/1	R		SPARE
					1080		22			
SPARE	R	20/1	23			1080	20/1	R		SPARE
						1080	24			
SPARE	R	20/1	25				20/1	R		SPARE
							26			
SPARE	R	20/1	27				20/1	R		SPARE
							28			
SPARE	R	20/1	29				20/1	R		SPARE
							30			
SPARE	R	20/1	31				20/1	R		SPARE
							32			
SPARE	R	20/1	33				20/1	R		SPARE
							34			
SPARE	R	20/1	35				20/1	R		SPARE
							36			
SPARE	R	20/1	37				20/1	R		SPARE
							38			
SPARE	R	20/1	39				20/1	R		SPARE
							40			
SPARE	R	20/1	41				20/1	R		SPARE
							42			
SECTION #2										
SPARE		20/1	43				20/1			SPARE
							44			
SPARE		20/1	45				20/1			SPARE
							46			
SPARE		20/1	47				20/1			SPARE
							48			
SPARE		20/1	49				20/1			SPARE
							50			
SPARE		20/1	51				20/1			SPARE
							52			
SPARE		20/1	53				20/1			SPARE
							54			
SPARE		20/1	55				20/1			SPARE
							56			
SPARE		20/1	57				20/1			SPARE
							58			
SPARE		20/1	59				20/1			SPARE
							60			
SPARE		20/1	61				20/1			SPARE
							62			
SPARE		20/1	63				20/1			SPARE
							64			
SPARE		20/1	65				20/1			SPARE
							66			
SPARE		20/1	67				20/1			SPARE
							68			
SPARE		20/1	69				20/1			SPARE
							70			
RESTROOM/LOCKER RM RECEPT		20/1	71				20/1	R		SPARE
							72			
RESTROOM/LOCKER RM RECEPT		20/1	73				20/1	R		SPARE
							74			
LAUNDRY 2703 RECEPT.		20/1	75				20/1			SPARE
							76			
LOCKER RM RECEPT.		20/1	77				20/1			SPARE
							78			
BUSSED SPACE			79							BUSSED SPACE
							80			
BUSSED SPACE			81							BUSSED SPACE
							82			
BUSSED SPACE			83							BUSSED SPACE
							84			

CONN. VA PHASE A	7920	CONN. VA (CODE H)	0	DEMAND KVA	16.9
CONN. VA PHASE B	7920	CONN. VA (CODE L)	0	DEMAND AMPS	48.9
CONN. VA PHASE C	7920	CONN. VA (CODE R)	23760	CONN. AMPS	66.0
TOTAL CONN. VA	23760	CONN. VA (CODE X)	0	HIGH PH AMPS/LCL	66.0

PANEL NOTES:

PANEL: MLP1 | VOLTAGE: 208 /120V, 3-PH, 4W | BUS SIZE: 225A | MAIN: 225A/3P M.C.B.
LOCATION:MENS LOCKER ROOM | MOUNTING: SURFACE | A/C RATING: 20,000A | FEED: TOP X BOTTOM
CIRCUIT CODE: blank or R: NON-CONTINUOUS L: LONG-CONTINUOUS R :REMAINABLE RECEPT'S N: KITCHEN P: PANEL U-UNIT

ITEM	CODE	BKR	CKT	A	B	C	CKT	BKR	CODE	ITEM
LOCKER #S 17 THRU 24 RECEPT.	R	20/1	1	1080			20/1	R		SPARE
							2			
LOCKER #S 9 THRU 16 RECEPT.	R	20/1	3		1080		20/1	R		SPARE
							4			
LOCKER #S 1 THRU 8 RECEPT.	R	20/1	5			1080	20/1	R		SPARE
							6			
SPARE	R	20/1	7	1080			20/1	R		SPARE
							8			
SPARE	R	20/1	9		1080		20/1	R		SPARE
							10			
SPARE	R	20/1	11			1080	20/1	R		SPARE
							12			
SPARE	R	20/1	13	1080			20/1	R		SPARE
							14			
SPARE	R	20/1	15		1080		20/1	R		SPARE
							16			
SPARE	R	20/1	17			1080	20/1	R		SPARE
							18			
SPARE	R	20/1	19	1080			20/1	R		SPARE
							20			
SPARE	R	20/1	21		1080		20/1	R		SPARE
							22			
SPARE	R	20/1	23				20/1	R		SPARE
							24			
SPARE	R	20/1	25				20/1	R		SPARE
							26			
SPARE	R	20/1	27				20/1	R		SPARE
							28			
SPARE	R	20/1	29				20/1	R		SPARE
							30			
SPARE	R	20/1	31				20/1	R		SPARE
							32			
SPARE	R	20/1	33				20/1	R		SPARE
							34			
SPARE	R	20/1	35				20/1	R		SPARE
							36			
SPARE			37							SPARE
							38			
SPARE			39							SPARE
							40			
SPARE			41							SPARE
							42			

CONN. VA PHASE A	4320	CONN. VA (CODE H)	0	DEMAND KVA	10.9
CONN. VA PHASE B	4320	CONN. VA (CODE L)	0	DEMAND AMPS	30.4
CONN. VA PHASE C	3240	CONN. VA (CODE R)	11880	CONN. AMPS	33.0
TOTAL CONN. VA	11880	CONN. VA (CODE X)	0	HIGH PH AMPS/LCL	76.0

PANEL NOTES:

SECTION #2

ITEM	CODE	BKR	CKT	A	B	C	CKT	BKR	CODE	ITEM
SPARE	R	20/1	43	1080			20/1	R		SPARE
				1080			44			
SPARE	R	20/1	45		1080		20/1	R		SPARE
					1080		46			
SPARE	R	20/1	47			1080	20/1	R		SPARE
						1080	48			
SPARE	R	20/1	49	1080			20/1	R		SPARE
				1080			50			
SPARE	R	20/1	51		1080		20/1	R		SPARE
					1080		52			
SPARE	R	20/1	53			1080	20/1	R		SPARE
						1080	54			
SPARE		20/1	57		1080		20/1	R		SPARE
					1080		58			
SPARE		20/1	59			1080	20/1	R		SPARE
						1080	60			
SPARE		20/1	61	1080			20/1	R		SPARE
				1080			62			
SPARE		20/1	63		1080		20/1			SPARE
					1080		64			
SPARE		20/1	65			1080	20/1			SPARE
						1080	66			
SPARE		20/1	67	1080			20/1			SPARE
				1080			68			
SPARE		20/1	69		1080		20/1			SPARE
					1080		70			
SPARE		20/1	71			1008	20/1			SPARE
						1008	72			
SPARE		20/1	73				20/1			SPARE
							74			
SPARE		20/1	75			1080	20/1			SPARE
						1080	76			
SPARE		20/1	77				20/1			SPARE
							78			
BUSSED SPACE			79							BUSSED SPACE
							80			
BUSSED SPACE			81							BUSSED SPACE
							82			
BUSSED SPACE			83							BUSSED SPACE
							84			

CONN. VA PHASE A	29929	CONN. VA (CODE H)	13868	DEMAND KVA	50.3
CONN. VA PHASE B	25920	CONN. VA (CODE L)	0	DEMAND AMPS	130.7
CONN. VA PHASE C	24768	CONN. VA (CODE R)	63940	CONN. AMPS	212.8
TOTAL CONN. VA	76608	CONN. VA (CODE X)	0	HIGH PH AMPS/LCL	172.2

PANEL NOTES:

1st Floor AREA #3

PANEL: EM | VOLTAGE: 480 V, 3-PH, 3W | BUS SIZE: 400A | MAIN: 400A/3P M.C.B.
LOCATION:RM 2213 | MOUNTING: SURFACE | A/C RATING: 30,000A | FEED: TOP X BOTTOM
CIRCUIT CODE: blank or R: NON-CONTINUOUS L: LONG-CONTINUOUS R :REMAINABLE RECEPT'S N: KITCHEN P: PANEL U-UNIT

ITEM	CODE	BKR	CKT	A	B	C	CKT	BKR	CODE	ITEM
EXISTING AC-5	L	175/1	1	47797			20/	R		AC-9
				11210			2			HVAC UNIT
SAME CKT AS ABOVE	L		3		47797					SAME CKT AS ABOVE
					11210		4			
SAME CKT AS ABOVE	L	/3	5			47797	3/1	R		SAME CKT AS ABOVE
						11210	6			
SPARE		25/	7	-			15/			SPARE
				-			8			
SAME CKT AS ABOVE			9	-						SAME CKT AS ABOVE
				-			10			
SAME CKT AS ABOVE		/3	11			-	/3			SAME CKT AS ABOVE
						-	12			
AC-8		80/	13	16885			15/1			SPARE
HVAC UNIT				-			14			
SAME CKT AS ABOVE			15		16885		30/			SPARE
					-		16			
SAME CKT AS ABOVE		/3	17			16885	/			SAME CKT AS ABOVE
						-	18			
CU-1 & CU-2		20/	19	5148			/3			SAME CKT AS ABOVE
HVAC UNIT				-			20			
SAME CKT AS ABOVE			21		5148		30/			SPARE
					-		22			
SAME CKT AS ABOVE		/3	23			5148	/			SAME CKT AS ABOVE
						-	24			
SPARE		15/1	25	-			/3			SAME CKT AS ABOVE
				-			26			
SPARE		20/1	27				15/1			SPARE
							28			
AC-10 & AC-11		30/	29			5979	20/1			SPARE
							30			
SAME CKT AS ABOVE			31	5979						BUSSED SPACE
				-			32			
SAME CKT AS ABOVE		/3	33		5979					BUSSED SPACE
					-		34			
BUSSED SPACE			35			-				BUSSED SPACE
							36			
BUSSED SPACE			37							BUSSED SPACE
							38			
BUSSED SPACE			39							BUSSED SPACE
							40			
BUSSED SPACE			41							BUSSED SPACE
							42			

CONN. VA PHASE A	21921	CONN. VA (CODE H)	38858	DEMAND KVA	38.7
CONN. VA PHASE B	14649	CONN. VA (CODE L)	0	DEMAND AMPS	167.4
CONN. VA PHASE C	19888	CONN. VA (CODE R)	0	CONN. AMPS	167.4
TOTAL CONN. VA	38858	CONN. VA (CODE X)	0	HIGH PH AMPS/LCL	122.1

PANEL NOTES:
1. ✳ CONTROLLED THROUGH CONTRACTOR

PANEL: UDP2 | VOLTAGE: 208 /120V, 3-PH, 4W | BUS SIZE: 100A | MAIN: LUGS ONLY
LOCATION:RM 2000 | MOUNTING: SURFACE | A/C RATING: 10,000A | FEED: TOP X BOTTOM
CIRCUIT CODE: blank or R: NON-CONTINUOUS L: LONG-CONTINUOUS R :REMAINABLE RECEPT'S N: KITCHEN P: PANEL U-UNIT

ITEM	CODE	BKR	CKT	A	B	C	CKT	BKR	CODE	ITEM
FM 200 PANEL ROOM 1101		20/1	1	900			20/1			RM # 1101 RECEPTACLES
				540			2			
EPO/ SHUNT TRP CONTROL		20/1	3		900					
					540		4	20/1		RM # 1101 RECEPTACLES
LOGIX RM ROOM 5004		20/	5			900	20/1			RM # 1101 RECEPTACLES
						600	6			
LOGIX RF ROOM 5004		/2	7	600			20/1			MOTOROLA RACK #4 ROOM 1101
				600	-		8			
LOGIX RF ROOM 5004		20/	9		900		20/1			MOTOROLA RACK #4 ROOM 1101
					600		10			
LOGIX RF ROOM 5004		/2	11			900	20/1			MOTOROLA RACK #5 ROOM 1101
						540	12			
MOTOROLA RACK ROOM 1101		20/1	13	900			20/1			MOTOROLA RACK #5 ROOM 1101
				360			14			
MOTOROLA RACK ROOM 1101		20/1	15		900		20/1			MOTOROLA RACK #7 ROOM 1101
					1080		16			
MOTOROLA RACK #7 ROOM 1101		20/1	17			900	20/1			MOTOROLA RACK #7 ROOM 1101
						1008	18			
MOTOROLA RACK #8 ROOM 1101		20/1	19	900			20/1			MOTOROLA RACK #8 ROOM 1101
				1008			20			
MOTOROLA RACK #2 ROOM 1101		20/1	21		900		20/1			MOTOROLA RACK #8 ROOM 1101
					1008		22			
MOTOROLA RACK #2 ROOM 1101		20/1	23			900	20/1			SPARE
						1008	24			
MOTOROLA RACK #3 ROOM 1101		20/1	25	900			20/1			SPARE
				1008			26			
MOTOROLA RACK #3 ROOM 1101		20/1	27		900		20/1			SPARE
					1008		28			
SPARE		20/1	29			900	20/1			SPARE
						1008	30			

CONN. VA PHASE A	11420	CONN. VA (CODE H)	33220	DEMAND KVA	33.2
CONN. VA PHASE B	11280	CONN. VA (CODE L)	0	DEMAND AMPS	92.3
CONN. VA PHASE C	10540	CONN. VA (CODE R)	0	CONN. AMPS	92.3
TOTAL CONN. VA	33220	CONN. VA (CODE X)	0	HIGH PH AMPS/LCL	65.2

PANEL NOTES:

2nd Floor (Dispatch)

PANEL: UDP | VOLTAGE: 208 /120V, 3-PH, 4W | BUS SIZE: 225A | MAIN: 150A/3P M.C.B.
LOCATION:RM 2009 | MOUNTING: SURFACE | A/C RATING: 10,000A | FEED: TOP X BOTTOM X
CIRCUIT CODE: blank or R: NON-CONTINUOUS L: LONG-CONTINUOUS R :REMAINABLE RECEPT'S N: KITCHEN P: PANEL U-UNIT

ITEM	CODE	BKR	CKT	A	B	C	CKT	BKR	CODE	ITEM
UNDERFLOOR RECEPTACLE DISPATCH		20/1	1	900			20/1			UNDERFLOOR RECEPTACLE DISPATCH
				540			2			
UNDERFLOOR RECEPTACLE DISPATCH		20/1	3		900					
					540		4	20/1		UNDERFLOOR RECEPTACLE DISPATCH
UNDERFLOOR RECEPTACLE DISPATCH		20/1	5			900	20/1			UNDERFLOOR RECEPTACLE DISPATCH
						600	6			
UNDERFLOOR RECEPTACLE DISPATCH		20/1	7	900			20/1			UNDERFLOOR RECEPTACLE DISPATCH
				400			8			
UNDERFLOOR RECEPTACLE DISPATCH		20/1	9		900		20/1			UNDERFLOOR RECEPTACLE DISPATCH
					600		10			
UNDERFLOOR RECEPTACLE DISPATCH		20/1	11			900	20/1			UNDERFLOOR RECEPTACLE DISPATCH
						540	12			
UNDERFLOOR RECEPTACLE DISPATCH		20/1	13	900			20/1			UNDERFLOOR RECEPTACLE DISPATCH
				360			14			
UNDERFLOOR RECEPTACLE DISPATCH		20/1	15		900		20/1			UNDERFLOOR RECEPTACLE DISPATCH
					1080		16			
UNDERFLOOR RECEPTACLE DISPATCH		20/1	17			900	20/1			UNDERFLOOR RECEPTACLE DISPATCH
						1008	18			
UNDERFLOOR RECEPTACLE DISPATCH		20/1	19	900			20/1			UNDERFLOOR RECEPTACLE DISPATCH
				1008			20			
UNDERFLOOR RECEPTACLE DISPATCH		20/1	21		900		20/1			UNDERFLOOR RECEPTACLE DISPATCH
					1008		22			
UNDERFLOOR RECEPTACLE DISPATCH		20/1	23			900	20/1			UNDERFLOOR RECEPTACLE DISPATCH
						1008	24			
UNDERFLOOR RECEPTACLE DISPATCH		20/1	25	900			20/1			UNDERFLOOR RECEPTACLE DISPATCH
				1008			26			
UNDERFLOOR RECEPTACLE DISPATCH		20/1	27		900		20/1			UNDERFLOOR RECEPTACLE DISPATCH
					1008		28			
UNDERFLOOR RECEPTACLE DISPATCH		20/1	29			900	20/1			UNDERFLOOR RECEPTACLE DISPATCH
						1008	30			
UNDERFLOOR RECEPTACLE DISPATCH		20/1	31	900			20/1			UNDERFLOOR RECEPTACLE DISPATCH
				1008			32			
UNDERFLOOR RECEPTACLE DISPATCH		20/1	33		900		100/			PANEL UDP2
					1008		34			
UNDERFLOOR RECEPTACLE DISPATCH		30/1	35			900	/			SPARE CKT AS ABOVE
						1008	36			
SWITCHBOARD ROOM #1803		20/1	37	720			/3			SPARE CKT AS ABOVE
				1008			38			
LOGIX MOTOROLA ROOM 1101		20/	39		720		30/			LOGIX MOTOROLA ROOM 1101
							40			
LOGIX MOTOROLA ROOM 1101		/2	41				/2			LOGIX MOTOROLA ROOM 1101
							42			

CONN. VA PHASE A	11420	CONN. VA (CODE H)	33220	DEMAND KVA	33.2
CONN. VA PHASE B	11280	CONN. VA (CODE L)	0	DEMAND AMPS	92.3
CONN. VA PHASE C	10540	CONN. VA (CODE R)	0	CONN. AMPS	92.3
TOTAL CONN. VA	33220	CONN. VA (CODE X)	0	HIGH PH AMPS/LCL	65.2

PANEL NOTES:

PANEL: NDP | VOLTAGE: 208 /120V, 3-PH, 4W | BUS SIZE: 225A | MAIN: 225A/3P M.C.B.
LOCATION:RM 2009 | MOUNTING: SURFACE | A/C RATING: 10,000A | FEED: TOP X BOTTOM X
CIRCUIT CODE: blank or R: NON-CONTINUOUS L: LONG-CONTINUOUS R :REMAINABLE RECEPT'S N: KITCHEN P: PANEL U-UNIT

ITEM	CODE	BKR	CKT	A	B	C	CKT	BKR	CODE	ITEM
DISPATCH SUPERVISION		20/1	1	600			20/1			UNDERFLOOR RECEPTACLE DISPATCH
							2			
DISPATCH SUPERVISION		20/1	3		180		20/1			UNDERFLOOR RECEPTACLE

PANEL: NF

VOLTAGE: 208 /120V, 3-PH, 4W | BUS SIZE: 100A | MAIN: LUGS ONLY
LOCATION:RM. #0019 | MOUNTING: SURFACE | AIC RATING:10,000A | FEED: TOP X BOTTOM X
CIRCUIT CODE: blank or R: NON-CONTINUOUS L: LONG-CONTINUOUS R :DEMAINABLE RECEPT'S K: KITCHEN P: PANEL U:UNIT

ITEM	CODE	BKR	CKT	A	B	C	CKT	BKR	CODE	ITEM
REFRIG. 4817		20/1	1	1500				20/1		REFRIG. 4817
				1500			2			
REFRIG. 4817		20/1	3		1500			20/1		REFRIG. 4817
					1500		4			
REFRIG. 4817		20/1	5			1500		20/1		REFRIG. 4817
						1500	6			
REFRIG. 4817		20/1	7	1500				20/1		REFRIG. 4817
				1500			8			
REFRIG. 4817		20/1	9		1500			20/1		SPARE
							10			
REFRIG. 4817		20/1	11			1500		20/1		SPARE
							12			
STORAGE 4818	R	20/1	13	360				20/1		SPARE
							14			
STORAGE 4818	R	20/1	15		360			20/1		SPARE
							16			
SPARE		20/1	17					20/1		SPARE
							18			
BUSSED SPACE			19							BUSSED SPACE
							20			
BUSSED SPACE			21							BUSSED SPACE
							22			
BUSSED SPACE			23							BUSSED SPACE
							24			

CONN. VA PHASE A	–	CONN. VA (CODE H)	–	DEMAND KVA –
CONN. VA PHASE B	–	CONN. VA (CODE L)	0	DEMAND AMPS –
CONN. VA PHASE C	–	CONN. VA (CODE R)	–	CONN. AMPS –
TOTAL CONN. VA	–	CONN. VA (CODE K)	0	HIGH PH AMPS/LG. –

PANEL NOTES:

PANEL: SF

VOLTAGE: 208 /120V, 3-PH, 4W | BUS SIZE: 225A | MAIN: LUGS ONLY
LOCATION:RM. #0011 | MOUNTING: SURFACE | AIC RATING:10,000A | FEED: TOP X BOTTOM X
CIRCUIT CODE: blank or R: NON-CONTINUOUS L: LONG-CONTINUOUS R :DEMAINABLE RECEPT'S K: KITCHEN P: PANEL U:UNIT

ITEM	CODE	BKR	CKT	A	B	C	CKT	BKR	CODE	ITEM
AUTOMATIC FRONT DOORS	R	20/1	1	900				20/1	R	ELEVATOR PIT LIGHTS/RECEPTACLE
				900			2			
SPARE TO SIZE	R	20/1	3		900			20/1	R	SPARE TO ELEVATOR MACHINE ROOM
					900		4			
TREE LIGHTS	R	20/1	5			900		20/1	R	ELEVATOR CAB LIGHTS
						900	6			
SPARE	R	20/1	7	900				20/1	R	SPARE
				900			8			
SPARE	R	20/1	9		900			20/1	R	SPARE
					900		10			
SPARE	R	20/1	11			600		20/1	R	SPARE
						900	12			
SPARE	R	20/1	13	900				20/1	R	SPARE
				900			14			
SPARE	R	20/1	15		600			20/1	R	SPARE
					900		16			
SPARE	R	20/1	17			900		20/1	R	SPARE
						900	18			
SPARE	R	20/1	19	900				20/1	R	SPARE
				900			20			
SPARE	R	20/1	21		900			20/1	R	SPARE
					900		22			
SPARE	R	20/1	23			900		20/1	R	SPARE
						900	24			
SPARE	R	20/1	25	900				20/1	R	SPARE
				900			26			
SPARE	R	20/1	27		900			20/1	R	SPARE
					900		28			
SPARE	R	20/1	29			600		20/1	R	SPARE
						1500	30			
SPARE	R	20/1	31	900				30/1	R	SPARE
				1500			32			
SPARE	R	20/1	33		900			30/1	R	SPARE
					900		34			
SPARE	R	20/1	35			600		30/1	R	SPARE
						1500	36			
SPARE	R	20/1	37	900				30/1	R	SPARE
				900			38			
SPARE	R	20/1	39		600			20/1	R	SPARE
					900		40			
SPARE	R	20/1	41			900		20/1	R	SPARE
						900	42			

CONN. VA PHASE A	–	CONN. VA (CODE H)	–	DEMAND KVA –
CONN. VA PHASE B	–	CONN. VA (CODE L)	0	DEMAND AMPS –
CONN. VA PHASE C	–	CONN. VA (CODE R)	–	CONN. AMPS –
TOTAL CONN. VA	–	CONN. VA (CODE K)	0	HIGH PH AMPS/LG. –

PANEL NOTES:

PANEL: TF

VOLTAGE: 208 /120V, 3-PH, 4W | BUS SIZE: 100A | MAIN: LUGS ONLY
LOCATION:RM. #0011 | MOUNTING: SURFACE | AIC RATING:10,000A | FEED: TOP X BOTTOM X
CIRCUIT CODE: blank or R: NON-CONTINUOUS L: LONG-CONTINUOUS R :DEMAINABLE RECEPT'S K: KITCHEN P: PANEL U:UNIT

ITEM	CODE	BKR	CKT	A	B	C	CKT	BKR	CODE	ITEM
MULTI-PURP. RM.	R	20/1	1	1080				20/1	R	FURNITURE 1301,1307
				900			2			
MULTI-PURP. RM.	R	20/1	3		720			20/1	R	FURNITURE 1301,1307
					900		4			
MULTI-PURP. RM.	R	20/1	5			900		20/1	R	FURNITURE 1301,1307
						900	6			
MULTI-PURP. RM – SCREEN.	R	20/1	7	500				20/1	R	FURNITURE 1408
				900			8			
MULTI-PURP. SUPPORT RM.	R	20/1	9		900			20/1	R	FURNITURE 1408
					900		10			
MULTI-PURP. SUPPORT RM.	R	20/1	11			720		20/1	R	FURNITURE 1408
						900	12			
MULTI-PURP. SUPPORT RM.	R	20/1	13	900				20/1	R	FURNITURE 1407
				900			14			
OFFICE 1301,1302,1311–1313	R	20/1	15		600			20/1	R	FURNITURE 1407
					900		16			
OFFICE 1301,1302,1311–1313	R	20/1	17			900		20/1	R	FURNITURE 1407
						900	18			
OFFICE 1301,1302,1311–1313	R	20/1	19	900				20/1	R	FURNITURE 1507
				900			20			
OFFICE 1304–1308,1308,1404,1405	R	20/1	21		900			20/1	R	FURNITURE 1507
					900		22			
OFFICE 1304–1308,1308,1404,1405	R	20/1	23			900		20/1	R	FURNITURE 1507
						900	24			
OFFICE 1304–1308,1308,1404,1405	R	20/1	25	720				20/1	R	FURNITURE FLOOR BOX 1508
				900			26			
OFFICE3503–3505,1408	R	20/1	27		1080			20/1		FURNITURE FLOOR BOX 1508
					900		28			
OFFICE3503–3505,1408	R	20/1	29			1080		20/1		FURNITURE FLOOR BOX 1508
						900	30			
OFFICE3503–3505,1408	R	20/1	31	1260				30/1		FURNITURE FLOOR BOX 1508
				900			32			
OFFICE3503–3505,1408	R	20/1	33		720			30/1		FURNITURE FLOOR BOX 1508
					900		34			
OFFICE3503–3505,1408		20/1	35			1080		30/1		FURNITURE FLOOR BOX 1508
						900	36			
RECEPT RESTROOM 1102,1104 JANITOR 1103, DRINKING FOUNT		20/1	37		900			30/1		NORTH GATE OPERATOR
							38			
SOUTH GATE OPERATOR	R	20/1	39			600		20/1	L	VAV TRANSFORMERS 2–1 THRU 13
							40			
SOUTH GATE OPERATOR	R	20/1	41			900		20/1	L	SITE IRRIGATION CONTROLLER
						900	42			

CONN. VA PHASE A	–	CONN. VA (CODE H)	–	DEMAND KVA –
CONN. VA PHASE B	–	CONN. VA (CODE L)	0	DEMAND AMPS –
CONN. VA PHASE C	–	CONN. VA (CODE R)	–	CONN. AMPS –
TOTAL CONN. VA	–	CONN. VA (CODE K)	0	HIGH PH AMPS/LG. –

PANEL NOTES:

PANEL: UF

VOLTAGE: 208 /120V, 3-PH, 4W | BUS SIZE: 125A | MAIN: LUGS ONLY
LOCATION:RM. #0005 | MOUNTING: SURFACE | AIC RATING:22,000A | FEED: TOP X BOTTOM X
CIRCUIT CODE: blank or R: NON-CONTINUOUS L: LONG-CONTINUOUS R :DEMAINABLE RECEPT'S K: KITCHEN P: PANEL U:UNIT

ITEM	CODE	BKR	CKT	A	B	C	CKT	BKR	CODE	ITEM
RM 5005–5007	R	20/1	1	720				20/1	R	RM 5008
				540			2			
RM 5005–5007	R	20/1	3		720			20/1	R	RM 5008
					540		4			
RM 5005–5007	R	20/1	5			720		20/1	R	RM 5008
						360	6			
RM 5012	R	20/1	7	540				20/1	R	RM 5009
				180			8			
RM 5012	R	20/1	9		540			20/1	R	RM 5009,5011
					540		10			
RM 5012	R	20/1	11			540		20/1	R	RM 5011
						360	12			
RM 5015	R	20/1	13	720				20/1	R	RM 5011
				360			14			
RM 5015	R	20/1	15		1080			20/1	R	RM 5013
					540		16			
RM 5015	R	20/1	17			540		20/1	R	RM 5013
						540	18			
RM 5014	R	20/1	19	900				20/1	R	VAV TRANSFORMERS 7– 1 THRU 7
				360			20			
RM 5014	R	20/1	21		720			20/1	R	RM 5021
					360		22			
OPEN OFFICE FURNITURE 5018	R	20/1	23			900		20/1	R	RM 5023,5026
						1080	24			
OPEN OFFICE FURNITURE 5018	R	20/1	25	900				20/1	R	W/C – CORR. / RESTROOMS
				720			26			
OPEN OFFICE FURNITURE 5018	R	20/1	27		900			30/1		SPARE
					2200		28			
PRINTER RM 5021		20/	29			1300		30/1	R	ROOFTOP RECEPTACLES
						540	30			
SANE CKT AS ABOVE		/2	31	1300				30/1	R	ELEVATOR LOBBY RM 5027
				180			32			
RM 5016–5017	R	20/1	33		720			30/1		REFRIGERATOR BREAK RM. 5008
							34			
RM 5016–5017	R	20/1	35			720		30/1		DISPOSAL BREAK RM. 5009
							36			
SPARE		20/1	37							BUSSED SPACE
							38			
SPARE		20/1	39							BUSSED SPACE
							40			
EF–2	L	20/1	41			1200				BUSSED SPACE
							42			

CONN. VA PHASE A	–	CONN. VA (CODE H)	–	DEMAND KVA –
CONN. VA PHASE B	–	CONN. VA (CODE L)	–	DEMAND AMPS –
CONN. VA PHASE C	–	CONN. VA (CODE R)	–	CONN. AMPS –
TOTAL CONN. VA	–	CONN. VA (CODE K)	0	HIGH PH AMPS/LG. –

PANEL NOTES:

PANEL: GF

VOLTAGE: 208Y /120V, 3-PH, 4W | BUS SIZE: 225A | MAIN: LUGS ONLY
LOCATION:RM. #0018 | MOUNTING: SURFACE | AIC RATING:22,000A | FEED: TOP X BOTTOM X
CIRCUIT CODE: blank or R: NON-CONTINUOUS L: LONG-CONTINUOUS R :DEMAINABLE RECEPT'S K: KITCHEN P: PANEL U:UNIT

ITEM	CODE	BKR	CKT	A	B	C	CKT	BKR	CODE	ITEM
OPEN OFFICE FURNITURE 4108	R	20/1	1	900				20/1	R	RECPT. RM 4005–4009
				720			2			
OPEN OFFICE FURNITURE 4108	R	20/1	3		900			20/1	R	RECPT. RM 4005–4009
					720		4			
OPEN OFFICE FURNITURE 4105	R	20/1	5			900		20/1	R	RECPT. RM 4005–4009
						720	6			
OPEN OFFICE FURNITURE 4105	R	20/1	7	900				20/1	R	FURNITURE 4108
				900			8			
OPEN OFFICE FURNITURE 4105	R	20/1	9		900			20/1	R	FURNITURE 4108
					900		10			
OPEN OFFICE FURNITURE 4105	R	20/1	11			900		20/1	R	FURNITURE 4108
						900	12			
RECEPTS(4) 4103,4104,1500,1512	R	20/1	13	900				20/1	R	MONITOR ROOM 4002
				360			14			
RECEPTS(4) 4103,4104,1500,1512	R	20/1	15		1080			20/1	R	MONITOR ROOM 4002
					180		16			
RECEPT. RM 4103,4104,1500,1512	R	20/1	17			1080		20/1	R	RECPT. RM 4109–4113
						1080	18			
RECPT. RM 1513	R	20/1	19	720				20/1	R	RECPT. RM 4109–4113
				1080			20			
PRINTER 1513		30/	21		1300			20/1	R	RECPT. RM 4109–4113
					1260		22			
SANE CKT AS ABOVE		/2	23			1300		20/1	R	RECEPT. RM 4004
						360	24			
RM 4007–4012	R	20/1	25	1260				20/1	R	WATCH COMMANDER ROOM 1011
				360			26			
RECPT. RM 4007–4012, 1011 WATCH COMMANDER	R	20/1	27		1080			20/1	R	WATCH COMMANDER ROOM 1011
					360		28			
RECPT. RM 4007–4012, 1011 WATCH COMMANDER	R	20/1	29			1080		20/1	R	CORRIDOR, STAFF BREAK, SOUTH COURT YARD
						1800	30			
RM 4008 COUNTER TOP RECEPT.	R	20/1	31	540				20/1	R	RM 1613
				540			32			
SPARE		20/1	33					20/1		SPARE TO 4004 CIR. 9/7
					1260		34			
SPARE		30/1	35			1300		20/1	R	RECEPTION 1714, 1715, 1706
						360	36			
BUSSED SPACE			37					20/1		SPARE TO ISSUE RM 1609
							38			
BUSSED SPACE			39					20/1		SPARE TO ISSUE RM 1609
							40			
BUSSED SPACE			41					20/1		SPARE
							42			

CONN. VA PHASE A	–	CONN. VA (CODE H)	–	DEMAND KVA –
CONN. VA PHASE B	–	CONN. VA (CODE L)	0	DEMAND AMPS –
CONN. VA PHASE C	–	CONN. VA (CODE R)	–	CONN. AMPS –
TOTAL CONN. VA	–	CONN. VA (CODE K)	0	HIGH PH AMPS/LG. –

PANEL NOTES:

PANEL: HP

VOLTAGE: 208 /120V, 3-PH, 4W | BUS SIZE: 225A | MAIN: 150A/3P M.C.B.
LOCATION:RM. #0007 | MOUNTING: SURFACE | AIC RATING:22,000A | FEED: TOP X BOTTOM X
CIRCUIT CODE: blank or R: NON-CONTINUOUS L: LONG-CONTINUOUS R :DEMAINABLE RECEPT'S K: KITCHEN P: PANEL U:UNIT

ITEM	CODE	BKR	CKT	A	B	C	CKT	BKR	CODE	ITEM
RECEPT. RM #4315		20/1	1	720				20/1		RECEPT. JUVENILE BOOKING RM #4316
				360			2			
RECEPT. RM #4313		20/1	3		720			20/1		RECEPT. JUVENILE BOOKING RM #4316
					720		4			
RECEPT. RM #4313		20/1	5			720		20/1		RECEPT. RM #4317
						180	6			
CAMERA /PHOTO LIGHTS BOOKING		20/1	7	180				20/1		RECEPT. RM #4317
				180			8			
RECEPT. ADULT PHOTO 4314		20/1	9		360			30/1		RECEPT. SHELL SPACE RM #4306
					180		10			
RECEPT. LIVESCAN 4313		20/1	11			540		30/1		RECEPT. RM #4317
						180	12			
RECEPT. SALLY PORT/ CORR 4808		20/1	13	540				20/1		WIREMOLD RECEPT. RM #4308
				720			14			
WIREMOLD RECEPT. RM #4308		20/1	15		720			20/1		WIREMOLD RECEPT. RM #4308
					720		16			
WIREMOLD RECEPT. RM #4308		20/1	17			720		20/1		WIREMOLD RECEPT. RM #4308
						360	18			
PRINTER RM 4205		20/1	19	1000				30/		COPIER RM 4205
				1200			20			
PRINTER RM 4205		20/1	21		1000			/2		SANE CKT AS ABOVE
					1200		22			
RECPT. RMS #4202–4207, 4302		20/1	23			1080		20/1		RESTROOMS (4201, 4222
						360	24			
WIREMOLD RECEPT. BOOKING RM#4335		20/1	25	900				30/1		RECEPT. RM #4319
				900			26			
WIREMOLD RECEPT. BOOKING RM#4335		20/1	27		900			20/1		RECEPT. RM #4319
						900	28			
VAV TRANSFORMERS 5–1 THRU 6 & 14 THRU 17		20/1	29			1600		30/1		SPARE
							30			
EF–3	L	20/1	31	1200				30/1		SPARE
				1500			32			
SPARE		30/1	33		1600			20/1		ROOF RECEPT. ON EF–3
							34			
SPARE	L	15/1	35			300		20/1		SPARE
						1200	36			
BUSSED SPACE			37							BUSSED SPACE
							38			
BUSSED SPACE			39							BUSSED SPACE
							40			
BUSSED SPACE			41							BUSSED SPACE
							42			

CONN. VA PHASE A	–	CONN. VA (CODE H)	–	DEMAND KVA –
CONN. VA PHASE B	–	CONN. VA (CODE L)	0	DEMAND AMPS –
CONN. VA PHASE C	–	CONN. VA (CODE R)	–	CONN. AMPS –
TOTAL CONN. VA	–	CONN. VA (CODE K)	0	HIGH PH AMPS/LG. –

PANEL NOTES:

PANEL: KF

VOLTAGE: 208 /120V, 3-PH, 4W | BUS SIZE: 225A | MAIN: LUGS ONLY
LOCATION:RM. #0009 | MOUNTING: SURFACE | AIC RATING:22,000A | FEED: TOP X BOTTOM X
CIRCUIT CODE: blank or R: NON-CONTINUOUS L: LONG-CONTINUOUS R :DEMAINABLE RECEPT'S K: KITCHEN P: PANEL U:UNIT

ITEM	CODE	BKR	CKT	A	B	C	CKT	BKR	CODE	ITEM
SPARE	R	20/1	1	1080				20/1	R	SPARE
				540			2			
SPARE	R	20/1	3		1080			20/1	R	SPARE
					540		4			
KP–1		15/1	5			500		20/1	R	SPARE
						540	6			
BOILER IGNITION/CONTROL		20/1	7	400				20/1		SPARE
							8			
BOILER IGNITION/CONTROL (ROOF)		20/1	9		400			20/1		SPARE
							10			
ROOF RECEPTACLES @ BOILER & AC–3 & 4	R	20/1	11			540		20/1		SPARE
							12			
SPARE		20/1	13					20/1		SPARE
							14			
SPARE		20/1	15					20/1		SPARE
							16			
ROOF RECEPTACLES @ EF–4 & 5		20/1	17					20/1		SPARE
							18			
SPARE		20/1	19					20/1		SPARE
							20			
SPARE		20/1	21					20/1		SPARE
							22			
SPARE		20/1	23					20/1		SPARE
							24			
SPARE		20/1	25					20/1		SPARE
							26			
SPARE		20/1	27					20/1		SPARE
							28			
SPARE		20/1	29					20/1		SPARE
							30			
RECEPT. ID WORK RM (UNDER FUME HOOD)		20/1	31					20/1		EF–17
							32			
RECEPT. ID WORK RM (UNDER FUME HOOD)		20/1	33					20/1		EF–18
							34			
RECEPT. ID WORK RM (UNDER FUME HOOD)		20/1	35					20/1		EF–19
							36			
BUSSED SPACE			37							BUSSED SPACE
							38			
BUSSED SPACE			39							BUSSED SPACE
							40			
RECEPT. RM 2501, 2702,2808			41							BUSSED SPACE
							42			

CONN. VA PHASE A	7080	CONN. VA (CODE H)	–	DEMAND KVA –
CONN. VA PHASE B	7780	CONN. VA (CODE L)	0	DEMAND AMPS –
CONN. VA PHASE C	6300	CONN. VA (CODE R)	–	CONN. AMPS –
TOTAL CONN. VA	22040	CONN. VA (CODE K)	0	HIGH PH AMPS/LG. –

PANEL NOTES:

PANEL: LF

VOLTAGE: 208 /120V, 3-PH, 4W | BUS SIZE: 225A | MAIN: LUGS ONLY
LOCATION:RM. #0013 | MOUNTING: SURFACE | AIC RATING:10,000A | FEED: TOP X BOTTOM X
CIRCUIT CODE: blank or R: NON-CONTINUOUS L: LONG-CONTINUOUS R :DEMAINABLE RECEPT'S K: KITCHEN P: PANEL U:UNIT

ITEM	CODE	BKR	CKT	A	B	C	CKT	BKR	CODE	ITEM
SPARE	R	20/1	1	900				20/1	R	WALL RECEPTACLES IN MDF RM
				1080			2			
SPARE	R	20/1	3		900			20/1	R	WALL RECEPTACLES IN MDF RM
					1080		4			
SPARE	R	20/1	5			900		20/1	R	WALL RECEPTACLES IN MDF RM
						1080	6			
SPARE	R	20/1	7	900				20/1	R	WALL RECEPTACLES IN MDF RM
				1080			8			
SPARE	R	20/1	9		900			20/1	R	WALL RECEPTACLES IN MDF RM
					1080		10			
SPARE	R	20/1	11			900		20/1	R	WALL RECEPTACLES IN MDF RM
						1080	12			
SPARE	R	20/1	13	900				20/1	R	WALL RECEPTACLES IN MDF RM
				1080			14			
SPARE	R	20/1	15		900			20/1	R	TELECOM RACK UNDERFLOOR / MDF WALL RECEPTACLES
					1080		16			
SPARE	R	20/1	17			900		20/1	R	TELECOM RACK UNDERFLOOR / MDF WALL RECEPTACLES
						1080	18			
SPARE	R	20/1	19	900				20/1	R	TELECOM RACK UNDERFLOOR / MDF WALL RECEPTACLES
				1080			20			
SPARE	R	20/1	21		900			20/1	R	TELECOM RACK UNDERFLOOR / MDF WALL RECEPTACLES
					1080		22			
SPARE	R	20/1	23			900		20/1	R	TELECOM RACK UNDERFLOOR / MDF WALL RECEPTACLES
						1080	24			
SPARE	R	20/1	25	900				20/1	R	TELECOM RACK UNDERFLOOR / MDF WALL RECEPTACLES
				1080			26			
SPARE	R	20/1	27		900			20/1	R	TELECOM RACK UNDERFLOOR / MDF WALL RECEPTACLES
					1080		28			
SPARE	R	20/1	29			900		20/1	R	TELECOM RACK UNDERFLOOR / MDF WALL RECEPTACLES
						1080	30			
SPARE	R	20/1	31	900				20/1	R	TELECOM RACK UNDERFLOOR / MDF WALL RECEPTACLES
				1080			32			
SPARE	R	20/1	33		900			20/1	R	TELECOM RACK UNDERFLOOR / MDF WALL RECEPTACLES
					1080		34			
SPARE	R	20/1	35			900		20/1	R	SPARE
						900	36			
SPARE	R	20/1	37	900				20/1	R	SPARE
				900			38			
SPARE	R	20/1	39		900			20/1	R	SPARE
					900		40			
ROOF RECEPTACLE @ AC–9	R	20/1	41			180		20/1	R	SPARE
						900	42			

CONN. VA PHASE A	–	CONN. VA (CODE H)	0	DEMAND KVA –
CONN. VA PHASE B	–	CONN. VA (CODE L)	0	DEMAND AMPS –
CONN. VA PHASE C	–	CONN. VA (CODE R)	–	CONN. AMPS –
TOTAL CONN. VA	–	CONN. VA (CODE K)	0	HIGH PH AMPS/LG. –

PANEL NOTES: ✳ CONTROLLED THROUGH CONTACTOR

PANEL: MF

VOLTAGE: 208 /120V, 3-PH, 4W | BUS SIZE: 225A | MAIN: LUGS ONLY
LOCATION:RM. #0012 | MOUNTING: SURFACE | AIC RATING:22,000A | FEED: TOP X BOTTOM X
CIRCUIT CODE: blank or R: NON-CONTINUOUS L: LONG-CONTINUOUS R :DEMAINABLE RECEPT'S K: KITCHEN P: PANEL U:UNIT

ITEM	CODE	BKR	CKT	A	B	C	CKT	BKR	CODE	ITEM
FURNITURE RM # 3111	R	20/1	1	900				20/1	R	FURNITURE RM # 3112
				900			2			
FURNITURE RM # 3111	R	20/1	3		900			20/1	R	FURNITURE RM # 3112
					900		4			
FURNITURE RM # 3111	R	20/1	5			900		20/1	R	FURNITURE RM # 3112
						900	6			
FURNITURE RM # 3111	R	20/1	7	900				20/1	R	FURNITURE RM # 3109
				900			8			
FURNITURE RM # 3111	R	20/1	9		900			20/1	R	FURNITURE RM # 3109
					900		10			
FURNITURE RM # 3111	R	20/1	11			900		20/1	R	FURNITURE RM # 3109
						900	12			
COPIER RM # 3104		20/	13	1300				20/1	R	RECEPT. RM 3201–3203, CORRIDOR
				720			14			
SANE CKT AS ABOVE		/2	15		1300			20/1	R	RECEPT. RM 3201–3203
					540		16			
RECEPT. RM # 3101	R	20/1	17			540		20/1	R	RECEPT. RM 3201–3203
						720	18			
RECEPT. RM #S 3102–3105	R	20/1	19	900				20/1	R	RECEPT. RM 3208–3208
				1080			20			
RECEPT. RM #S 3102–3105	R	20/1	21		900		

PANEL: HL	VOLTAGE: 480 /277V, 3-PH, 4W	BUS SIZE: 125A	MAIN: 125A/3P M.C.B.
LOCATION:---4207	MOUNTING: SURFACE	AIC RATING: 30,000A	FEED: TOP X BOTTOM X
CIRCUIT CODE: blank or N: NON-CONTINUOUS L: LONG-CONTINUOUS R :DEMANDABLE RECEPT'S K: KITCHEN P: PANEL U:UNIT			

ITEM	CODE	BKR	CKT	A	B	C	CKT	BKR	CODE	ITEM
SPARE	L	20/1	1	496			2	20/1		SPARE
SPARE	L	20/1	3		2208		4	15/		EF-7
LIGHTING 4204,4206,4211,4212,4308,4311,4313	L	20/1	5			1620	6	/		SAME CKT AS ABOVE
HOLDING AREA LIGHTING & 4209	L	20/1	7	1248			8	/3		SAME CKT AS ABOVE
LIGHTING 4202,4203,4205,4207,4208	L	20/1	9		1152		10	15/		EF-9
SPARE		20/1	11				12	/		SAME CKT AS ABOVE
SPARE		20/1	13				14	/3		SAME CKT AS ABOVE
SPARE		20/1	15		300		16	15/	L	EF-6
SPARE		20/1	17			300	18	/	L	SAME CKT AS ABOVE
SPARE		20/1	19	300			20	/3	L	SAME CKT AS ABOVE
BUSSED SPACE			21				22	15/		SALLY PORT ROLL UP DOORS
BUSSED SPACE			23				24	/		SAME CKT AS ABOVE
BUSSED SPACE			25				26	/3		SAME CKT AS ABOVE
BUSSED SPACE			27				28			BUSSED SPACE
BUSSED SPACE			29				30			BUSSED SPACE
BUSSED SPACE			31				32			BUSSED SPACE
BUSSED SPACE			33				34			BUSSED SPACE
BUSSED SPACE			35				36			BUSSED SPACE
BUSSED SPACE			37				38			BUSSED SPACE
BUSSED SPACE			39				40			BUSSED SPACE
BUSSED SPACE			41				42			BUSSED SPACE

CONN. VA PHASE A	-	CONN. VA (CODE N)	0	DEMAND KVA	-
CONN. VA PHASE B	-	CONN. VA (CODE L)	-	DEMAND AMPS	-
CONN. VA PHASE C	-	CONN. VA (CODE R)	0	CONN. AMPS	-
TOTAL CONN. VA	-	CONN. VA (CODE K)	0	HIGH PH AMPS/LCL	-

PANEL NOTES:

PANEL: BF	VOLTAGE: 480 /277V, 3-PH, 4W	BUS SIZE: 225A	MAIN: LUGS ONLY
LOCATION:RM 3213	MOUNTING: SURFACE	AIC RATING: 30,000A	FEED: TOP X BOTTOM X
CIRCUIT CODE: blank or N: NON-CONTINUOUS L: LONG-CONTINUOUS R :DEMANDABLE RECEPT'S K: KITCHEN P: PANEL U:UNIT			

ITEM	CODE	BKR	CKT	A	B	C	CKT	BKR	CODE	ITEM
SPARE		20/1	1	2688			2	20/1	L	EXIT PATHWAY LGHTN. 1612,1704,3204 4114,4201,4606,4614
LIGHTS 4611		20/1	3		1904		4	20/1	L	LIGHTING SUPPORT AREAS 4604,4615,4618,4619,
SPARE		20/1	5			1456	6	20/1	L	LIGHTING SUPPORT AREAS 4203,4607,4608,4609,4612,4616,4617
SPARE		20/1	7	2400			8	20/1	L	LIGHTING OFFICE/WORK AREAS 4103 THRU 4113, 1512,1513,1714,1715
SPARE		20/1	9		2750		10	20/1	L	LIGHTING SHELL/STORAGE 4502 THRU 4509
SPARE		20/1	11				12	20/		EF-4
SALLY PORT LIGHTING	L	20/1	13	3200			14	/		SAME CKT AS ABOVE
SALLY PORT LIGHTING	L	20/1	15		3200		16	/3		SAME CKT AS ABOVE
SALLY PORT LIGHTING	L	20/1	17			3200	18	20/		EF-5
LOWER WALL PACKS NORTH	L	20/1	19	3200			20	/		SAME CKT AS ABOVE
SPARE	L	20/1	21		3200		22	/3		SAME CKT AS ABOVE
SPARE	L	20/1	23			3200 / 3850	24	20/1		SPARE
SPARE	L	20/1	25	3200 / 3850			26	20/1	L	SOUTH CANOPY LIGHTING
SPARE	L	20/1	27		3200 / 3850		28	20/1	L	SOUTH CANOPY LIGHTING
SPARE	L	20/1	29			3200 / 3850	30	20/1	L	SOUTH CANOPY LIGHTING
N/W CANOPY LIGHTS		20/1	31				32	20/1		FLOOD LIGHTS WEST
N/W CANOPY LIGHTS		20/1	33				34	20/1		FLOOD LIGHTS WEST
N/W CANOPY LIGHTS		20/1	35			600	36	20/1	L	FLOOD LIGHTS WEST
SPARE		20/1	37				38	15/		SUMP PUMP WEST DOCK/SALLY PORT
SPARE		20/1	39				40	/		SAME CKT AS ABOVE
SPARE		20/1	41				42	/3		SAME CKT AS ABOVE

CONN. VA PHASE A	-	CONN. VA (CODE N)	0	DEMAND KVA	-
CONN. VA PHASE B	-	CONN. VA (CODE L)	-	DEMAND AMPS	-
CONN. VA PHASE C	-	CONN. VA (CODE R)	0	CONN. AMPS	-
TOTAL CONN. VA	-	CONN. VA (CODE K)	0	HIGH PH AMPS/LCL	-

PANEL NOTES:

PANEL: CF	VOLTAGE: 480 /277V, 3-PH, 4W	BUS SIZE: 225A	MAIN: LUGS ONLY
LOCATION:RM 3213	MOUNTING: SURFACE	AIC RATING: 30,000A	FEED: TOP X BOTTOM X
CIRCUIT CODE: blank or N: NON-CONTINUOUS L: LONG-CONTINUOUS R :DEMANDABLE RECEPT'S K: KITCHEN P: PANEL U:UNIT			

ITEM	CODE	BKR	CKT	A	B	C	CKT	BKR	CODE	ITEM
SPARE		20/1	1	1488			2	20/1	L	SHELL SPACE 3209,3303,3401, WEARHOUSE 4507
SPARE		20/1	3		2622		4	20/1	L	MENS LOCKERS
SPARE		20/1	5			2304	6	20/1	L	MENS LOCKERS
SPARE		20/1	7	3136			8	20/1	L	OFFICES 3104 THRU 3107, 3206 THRU 3208
SPARE		20/1	9		1596		10	20/1	L	COMPUTER ROOM/ ELECTRICAL RM 3205 / 3213
SPARE		20/1	11			1408	12	20/1	L	OFFICES 3101,3102,3103,3109,3111,3112
SPARE		20/1	13	1344			14	20/1	L	FUTURE RESTROOMS/ EXIT PATHWAY 2313,2701,3108,3211,3501
SPARE		20/1	15				16	20/1		SPARE
SPARE		20/1	17				18	20/1		SPARE
SPARE		20/1	19				20	20/1		SPARE
SPARE		20/1	21				22	20/1		SPARE
SPARE		20/1	23				24	20/1		SPARE
SPARE		20/1	25				26	20/1		SPARE
SPARE		20/1	27				28	20/1		SPARE
SPARE		20/1	29				30	20/1		SPARE
SPARE		20/1	31				32	20/1		SPARE
SPARE		20/1	33				34	20/1		SPARE
SPARE		20/1	35			400	36	20/1	L	SPARE
BUSSED SPACE			37				38			BUSSED SPACE
BUSSED SPACE			39				40			BUSSED SPACE
BUSSED SPACE			41				42			BUSSED SPACE

CONN. VA PHASE A	-	CONN. VA (CODE N)	0	DEMAND KVA	-
CONN. VA PHASE B	-	CONN. VA (CODE L)	-	DEMAND AMPS	-
CONN. VA PHASE C	-	CONN. VA (CODE R)	0	CONN. AMPS	-
TOTAL CONN. VA	-	CONN. VA (CODE K)	0	HIGH PH AMPS/LCL	-

PANEL NOTES:

PANEL: DF	VOLTAGE: 480 /277V, 3-PH, 4W	BUS SIZE: 225A	MAIN: LUGS ONLY
LOCATION: RM 5025	MOUNTING: SURFACE	AIC RATING: 30,000A	FEED: TOP X BOTTOM X
CIRCUIT CODE: blank or N: NON-CONTINUOUS L: LONG-CONTINUOUS R :DEMANDABLE RECEPT'S K: KITCHEN P: PANEL U:UNIT			

ITEM	CODE	BKR	CKT	A	B	C	CKT	BKR	CODE	ITEM
DISPATCH CENTER/RESTROOMS 5031,5032,5033,5036	L	20/1	1	1792 / 672			2	20/1	L	DISPATCH SUPERVISOR/ TELCOM RMS 5002,5003,5004
DISPATCH CENTER	L	20/1	3		2400		4	20/1		SPARE
OFFICES 5004THRU5008, 5003THRU5006	L	20/1	5			2944	6	20/1		SPARE
EXIT PATHWAY/ COPY WORKROOM	L	20/1	7	1456			8	20/1		SPARE
OFFICES 5011THRU5017	L	20/1	9		1776 / 448		10	20/1	L	DISPATCH STORAGE
SPARE		20/1	11				12	20/1		SPARE
SPARE		20/1	13				14	20/1		SPARE
SPARE		20/1	15				16	20/1		SPARE
SPARE		20/1	17				18	20/1		SPARE
SPARE		20/1	19				20	20/1		SPARE
SPARE		20/1	21				22	20/1		SPARE
SPARE		20/1	23				24	15/		EF-8
SPARE		20/1	25				26	/		SAME CKT AS ABOVE
SPARE		20/1	27		400		28	/3		SAME CKT AS ABOVE
SPARE		20/1	29			1500	30	20/1		SPARE
SPARE		20/1	31	1500			32	20/1		SPARE
SPARE		20/1	33		1500		34	20/1		SPARE
SPARE		20/1	35			1500	36	20/1		SPARE
BUSSED SPACE			37				38			BUSSED SPACE
BUSSED SPACE			39				40			BUSSED SPACE
BUSSED SPACE			41				42			BUSSED SPACE

CONN. VA PHASE A	-	CONN. VA (CODE N)	-	DEMAND KVA	-
CONN. VA PHASE B	-	CONN. VA (CODE L)	-	DEMAND AMPS	-
CONN. VA PHASE C	-	CONN. VA (CODE R)	0	CONN. AMPS	-
TOTAL CONN. VA	-	CONN. VA (CODE K)	0	HIGH PH AMPS/LCL	-

PANEL NOTES:

PANEL: EL	VOLTAGE: 480 /277V, 3-PH, 4W	BUS SIZE: 225A	MAIN: 150A/3P M.C.B.
LOCATION:RM 3213	MOUNTING: SURFACE	AIC RATING: 30,000A	FEED: TOP X BOTTOM X
CIRCUIT CODE: blank or N: NON-CONTINUOUS L: LONG-CONTINUOUS R :DEMANDABLE RECEPT'S K: KITCHEN P: PANEL U:UNIT			

ITEM	CODE	BKR	CKT	A	B	C	CKT	BKR	CODE	ITEM
SPARE		20/1	1	2016			2	20/1	L	DISPATCH CENTER/ STARWELLS
SPARE		20/1	3		861		4	20/1	L	EXIT SIGNS
SPARE		20/1	5			2640	6	20/1	L	OFFICE AREAS
EXIT PATHWAY	L	20/1	7	2880 / 3132			8	20/1	L	EXIT PATHWAY
SPARE		20/1	9		2400		10	20/1	L	OFFICE AREAS CENTER, MEZZ, HALLWAY
MENS LOCKER ROOM	L	20/1	11			2208 / 1536	12	20/1	L	OFFIE/WORK AREAS
COMPUTER ROOM/ELECTRIC RM	L	20/1	13	1680 / 768			14	20/1	L	OFFICE/WORK AREAS
OUTDOOR LIGHTING	L	20/1	15		646 / 2976		16	20/1	L	OFFICE/WORK AREAS HALLWAY
SPARE		20/1	17			2016	18	20/1	L	SOUTH OFFICE/WORK AREA & 2402 2401
SPARE		20/1	19	2112			20	20/1	L	OFFIC/WORK AREAS WOMENS LOCKER RM
SPARE		20/1	21		2688		22	20/1	L	OFFICE/WORK AREAS WOMENS LOCKER RM
SPARE		20/1	23				24	20/1		SPARE
SPARE		20/1	25				26	20/1		SPARE
SPARE		20/1	27				28	20/1		SPARE
SPARE		20/1	29			960	30	20/1	L	HOLDING AREA LIGHTING
SPARE		20/1	31	1680			32	20/1	L	SPARE
SPARE		20/1	33		1968		34	20/1	L	HOLDING AREA LIGHTING
SPARE		20/1	35			2464	36	20/1	L	SPARE
BUSSED SPACE			37				38			BUSSED SPACE
BUSSED SPACE			39				40			BUSSED SPACE
BUSSED SPACE			41				42			BUSSED SPACE

CONN. VA PHASE A	-	CONN. VA (CODE N)	-	DEMAND KVA	-
CONN. VA PHASE B	-	CONN. VA (CODE L)	-	DEMAND AMPS	-
CONN. VA PHASE C	-	CONN. VA (CODE R)	0	CONN. AMPS	-
TOTAL CONN. VA	-	CONN. VA (CODE K)	0	HIGH PH AMPS/LCL	-

PANEL NOTES:

PANEL: EF	VOLTAGE: 480 /277V, 3-PH, 4W	BUS SIZE: 225A	MAIN: LUGS ONLY
LOCATION:RM 2401	MOUNTING: SURFACE	AIC RATING: 30,000A	FEED: TOP X BOTTOM X
CIRCUIT CODE: blank or N: NON-CONTINUOUS L: LONG-CONTINUOUS R :DEMANDABLE RECEPT'S K: KITCHEN P: PANEL U:UNIT			

ITEM	CODE	BKR	CKT	A	B	C	CKT	BKR	CODE	ITEM
OFFICE LIGHTING 1813-1816 1102,1104 1303-1313, 1405-1408, 1503-1506	L	20/1	1	3848 / 1680			2	20/1	L	MULTI-PURP. RM. LIGHTS
LOBBY, EXIT PATHWAY	L	20/1	3		3792 / 2576		4	20/1	L	OFFICE/STORAGE LIGHTING 1108,1908 1109,1111,1114,1902,1204,1206-1208
LOBBY, EXIT PATHWAY 1105,1209,1401 1501,1601,1801,2101	L	20/1	5			4266 / 2064	6	20/1	L	OFFICE/WORK ROOM 1904-1907 1912,1913,2114
OFFICE LIGHTING 1507,1508,1514,1515 1607-1609, 1808,1809,1811,1812	L	20/1	7	3468 / 1680			8	20/1	L	ID WORKROOM LIGHTING 2805,2806, RM 2818
OFFICE LIGHTING 1802-1804, 1806,1807 1817-1819, 1821-1823, 1826-1828	L	20/1	9		3168 / 1008		10	20/1	L	OFFICE/WORK ROOM LIGHTING 2803,2804
OFFICE LIGHTING 1712,1713 1824,1825	L	20/1	11			3136 / 3248	12	20/1	L	OFFICE LIGHTING 2802,2807-2809,2811 2814-2817
SPARE	L	20/1	13	2450 / 1104			14	20/1	L	FORENSICS LOAD/UNLOAD 2812
OFFICE LIGHTING 1706-1709, 1711 2302,2312,2316,2317,2318	L	20/1	15		2240 / 1750		16	20/1	L	SHELL SPACE 2901 LIGHTING
EXIT PATHWAY 1701 OFFICE LIGHTS 1701,1703,1611,1613,1614	L	20/1	17			1680 / 1674	18	20/1	L	ELECT RM 2813 LIBRARY 2402
OFFICE LIGHTING 2303-2309 2311,2314,2323 (CHIEF'S OFFICE)	L	20/1	19	2304			20	20/1		SPARE
LIGHTING CURRENT RECORDS 2201 2126 2109,2111-2113,2115,2117-2119,2123	L	20/1	21		2400 / 1010		22	20/1	L	SIGNAGE/LANDSCAPING AND WALL LIGHTING
LIGHTING SHELL SPACE 2501 LIGHTING CRIME ANALYSIS 2401	L	20/1	23			1791 / 1270	24	15/		P-1 (ROOF)
NORTH EAST SOFFIT LIGHTING	L	20/1	25	1232 / 1270			26	/		SAME CKT AS ABOVE
RESTROOMS 2127,2129,2132,2213,2321	L	20/1	27		1736 / 1270		28	/3		SAME CKT AS ABOVE
EXIT PATHWAY 2102,2116,2124,2125 2128,2301,2406,2601,2801 & EX PARK	L	20/1	29			2064 / 1375	30	20/1	L	EXTERIOR WALKWAY FIXTURES
OFFICE LIGHTS 2103-2106	L	20/1	31	2688 / 1050			32	20/1	L	EXTERIOR POLE/WALKWAY/SIGNAGE LIGHTING
CHIEFS OFFICE LIGHTING 2315,2316,2323	L	20/1	33		2208 / 665		34	20/1	L	TREE & MONUMENT LIGHTS NORTH EAST WALL LIGHTS
WOMENS LOCKER/FITNESS 2603-2608, 2702	L	20/1	35			2688 / 600	36	20/1	L	SPARE
SPARE			37				38			BUSSED SPACE
BUSSED SPACE			39				40			BUSSED SPACE
BUSSED SPACE			41				42			BUSSED SPACE

CONN. VA PHASE A	-	CONN. VA (CODE N)	-	DEMAND KVA	-
CONN. VA PHASE B	-	CONN. VA (CODE L)	-	DEMAND AMPS	-
CONN. VA PHASE C	-	CONN. VA (CODE R)	0	CONN. AMPS	-
TOTAL CONN. VA	-	CONN. VA (CODE K)	0	HIGH PH AMPS/LCL	-

PANEL NOTES:

PANEL: HF	VOLTAGE: 480 /277V, 3-PH, 4W	BUS SIZE: 225A	MAIN: LUGS ONLY
LOCATION: RM 3213	MOUNTING: SURFACE	AIC RATING: 30,000A	FEED: TOP X BOTTOM X
CIRCUIT CODE: blank or N: NON-CONTINUOUS L: LONG-CONTINUOUS R :DEMANDABLE RECEPT'S K: KITCHEN P: PANEL U:UNIT			

ITEM	CODE	BKR	CKT	A	B	C	CKT	BKR	CODE	ITEM
SITE POLES SOUTH EAST	L	20/	1	3848 / 1680			2	20/	L	SITE POLES SOUTH NORTH
SITE POLES SOUTH EAST	L	/	3		3792 / 2576		4	/	L	SITE POLES SOUTH NORTH
SITE POLES SOUTH EAST	L	/3	5			4266 / 2064	6	/3	L	SITE POLES SOUTH NORTH
SITE POLES SOUTH	L	20/	7	3468 / 1680			8	20/	L	SITE POLES EAST
SITE POLES SOUTH	L	/	9		3168 / 1008		10	/	L	SITE POLES EAST
SITE POLES SOUTH	L	/3	11			3136 / 3248	12	/3	L	SITE POLES EAST
SPARE		20/	13	2450 / 1104			14	20/		SPARE
SPARE		/	15		2240 / 1750		16	/		SPARE
SPARE		/3	17			1680 / 1674	18	/3		SPARE
SPARE		20/	19	2304			20	20/		SPARE
SPARE		/	21		2400 / 1010		22	/2		SPARE
SPARE		/3	23			1791 / 1270	24	15/		SPARE
FREEWAY SIGN	L	20/1	25	1232 / 1270			26	/		SPARE
SPARE		20/1	27		1736 / 1270		28	/3		SPARE
SPARE		20/1	29			2064 / 1375	30	20/1		SPARE
SPARE		20/1	31	2688 / 1050			32	20/1		SPARE
SPARE		20/1	33		2208 / 665		34	20/1		SPARE
SPARE		20/1	35			2688 / 600	36	20/1		SPARE
SPARE			37				38			SPARE
SPARE			39				40			
			41				42			

CONN. VA PHASE A	-	CONN. VA (CODE N)	-	DEMAND KVA	-
CONN. VA PHASE B	-	CONN. VA (CODE L)	-	DEMAND AMPS	-
CONN. VA PHASE C	-	CONN. VA (CODE R)	0	CONN. AMPS	-
TOTAL CONN. VA	-	CONN. VA (CODE K)	0	HIGH PH AMPS/LCL	-

PANEL NOTES:

PANEL: AF	VOLTAGE: 480 /277V, 3-PH, 4W	BUS SIZE: 225A	MAIN: LUGS ONLY
LOCATION:RM 3213	MOUNTING: SURFACE	AIC RATING: 30,000A	FEED: TOP X BOTTOM X
CIRCUIT CODE: blank or N: NON-CONTINUOUS L: LONG-CONTINUOUS R :DEMANDABLE RECEPT'S K: KITCHEN P: PANEL U:UNIT			

ITEM	CODE	BKR	CKT	A	B	C	CKT	BKR	CODE	ITEM
SPARE		20/1	1	-			2	20/1		SPARE
SPARE		20/1	3		-		4	20/1		SPARE
SPARE		20/1	5			-	6	20/1		SPARE
SPARE		20/1	7	-			8	20/1		SPARE
SPARE		20/1	9		-		10	20/1		SPARE
SPARE		20/1	11				12	20/1		SPARE
SPARE		20/1	13	-			14	20/1		SPARE
SPARE		20/1	15		-		16	20/1		SPARE
SPARE		20/1	17			-	18	20/1		SPARE
SPARE		20/1	19	-			20	20/1		SPARE
SPARE		20/1	21		-		22	20/1		SPARE
SPARE		20/1	23			- / -	24	20/1		SPARE
SPARE		20/1	25	- / -			26	20/1		SPARE
SPARE		20/1	27		-		28	20/1		SPARE
SPARE		20/1	29			- / -	30	20/1		SPARE
SPARE		20/1	31				32	20/1		SPARE
SPARE		20/1	33				34	20/1		SPARE
SPARE		20/1	35			-	36	20/1		SPARE
SPARE		20/1	37				38	20/1		SPARE
SPARE		20/1	39				40	20/1		SPARE
SPARE		20/1	41				42	20/1		SPARE

CONN. VA PHASE A	-	CONN. VA (CODE N)	0	DEMAND KVA	-
CONN. VA PHASE B	-	CONN. VA (CODE L)	-	DEMAND AMPS	-
CONN. VA PHASE C	-	CONN. VA (CODE R)	0	CONN. AMPS	-
TOTAL CONN. VA	-	CONN. VA (CODE K)	0	HIGH PH AMPS/LCL	-

PANEL NOTES:

NOTES:

1. PROVIDE 20A, 277V LIGHTING CONTACTOR SIMILAR TO THE ASCO 917 (2 WIRE OPERATION) AT EACH PANELS, "CF", "DF", AND "EF" FOR CONTROL OF "EXIT PATHWAY" AND OTHER LIGHTING CIRCUITS. PROVIDE A (10) CHANNEL DIGITAL LIGHTING CONTROLLER FOR CONTROL OF THE LIGHTING CONTACTORS. THIS CONTROLLER SHALL BE LOCATED IN ROOM 3204.
2. PROVIDE 20A, 277V LIGHTING CONTACTOR SIMILAR TO THE ASCO 917 (2 WIRE OPERATION) AT PANEL "BF", FOR CONTROL OF EXTERIOR (EXISTING AND NEW) LIGHTING CIRCUITS. THIS CONTACTOR SHALL BE CONTROLLED FROM THE 10 CHANNEL DIGITAL LIGHTING CONTROLLER.

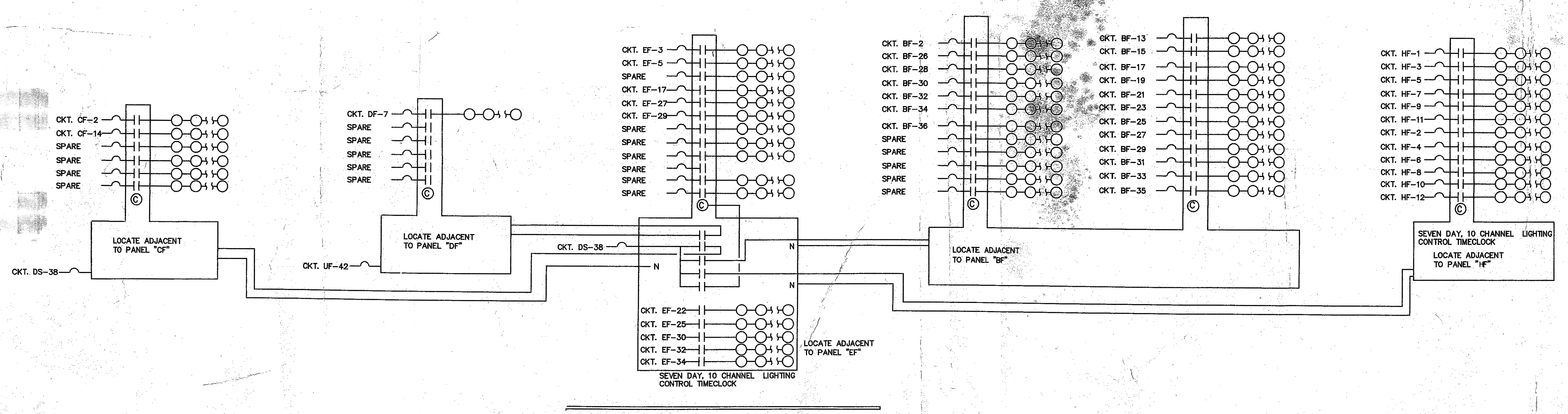

LIGHTING CONTROL DIAGRAM

'0\3550BDR.dwg

HL	BF	CF	DF
EL	EF	HF	AF

MORROW MEADOWS CORP.

RECORD DRAWING
DATE 12/22/03
JOB NUMBER 631027

REV.	DATE	DESCRIPTION	BY
A			
B			
C			
D			
E			
F			

COORDINATION

COORDINATION	SIGNATURE	DATE
GENERAL CONTRACTOR		
MECHANICAL (DUCT)		
MECHANICAL (PIPE)		
PLUMBING		
ELECTRICAL		
SPRINKLER		

Morrow-Meadows Corp.
ELECTRICAL CONTRACTORS AND ENGINEERS
231 Benton Court
City of Industry, Ca. 91789
Telephone (909) 598-7700
Fax (909) 598-3907
www.MORROW-MEADOWS.com
License #: 230813-C10
MORROW-MEADOWS CORP.
Group of Companies
"The Powerful Solution"

TITLE: PANEL SCHEDUALS
ONTARIO POLICE HEADQUARTERS
2534 S. ARCHIBALD AVE ONTARIO, CA 91761

date: 12/22/03	by: NO		
scale: NONE	chk:		
job#: 631027			
cadd file: As_Builts\3550E123.dwg			
drawing no: MM-E12.3			

ONTARIO POLICE DEPARTMENT

2500 ARCHIBALD AVENUE
ONTARIO, CA

DESCRIPTION

FM-200 FIRE SUPPRESSION
FOR
COMPUTER, DISPATCH STORAGE AND COMMUNICATIONS EQUIPMENT ROOMS

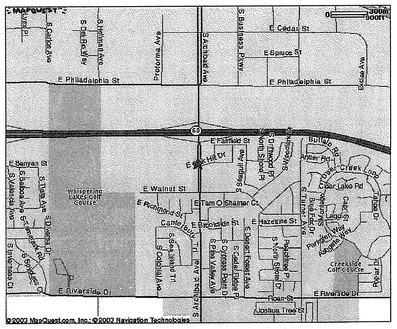
E Philadelphia St
E Fairfield St
E Walnut St
E Riverside Dr
Cesar E Chavez Park
Cesar Chavez Park
Whispering Lake Golf Course
Ontario Tennis Center
Ontario Convention Center
Ontario Airport Hilton
Ontario Marriott
Courtyard Ontario Airport
Residence Inn Ontario Airport
Aloft Ontario Airport
Hampton Inn Ontario Airport
Ontario Mills Mall
Ontario Mills Pkwy
Ontario Mills Dr
Mills Circle
Mills Center Dr
Mills Center Pl
Mills Center Ct
Mills Center Cir
Mills Center Way
Mills Center Rd
Mills Center Blvd
Mills Center Ln
Mills Center Ter
Mills Center Pkwy
Mills Center Plz
Mills Center Sq
Mills Center Ctr
Mills Center Cmn
Mills Center Ave

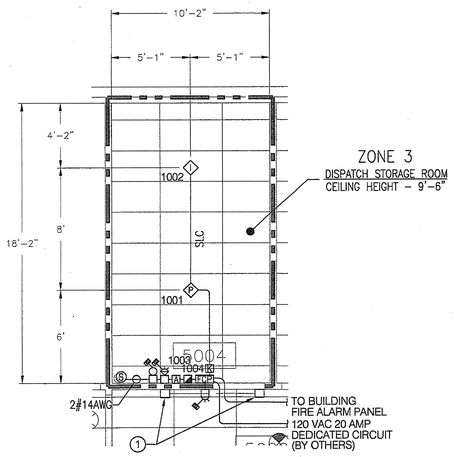

FM-200 SMOKE DETECTION PLAN

1/4" = 1'-0"

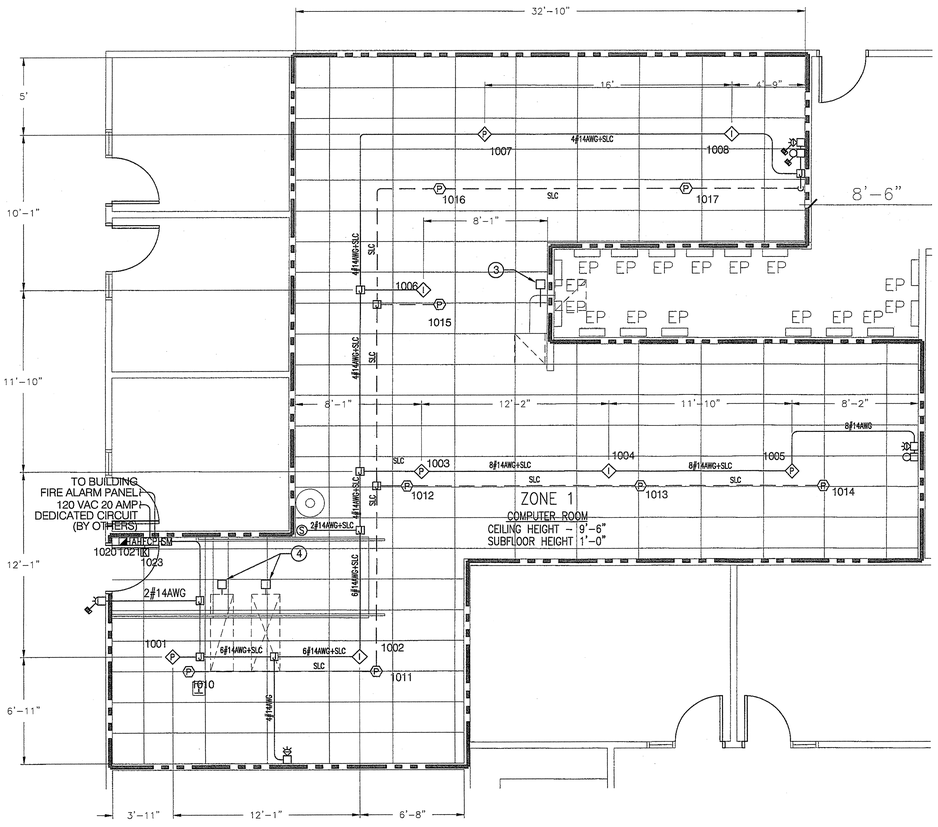

FM-200 SMOKE DETECTION PLAN

1/4" = 1'-0"

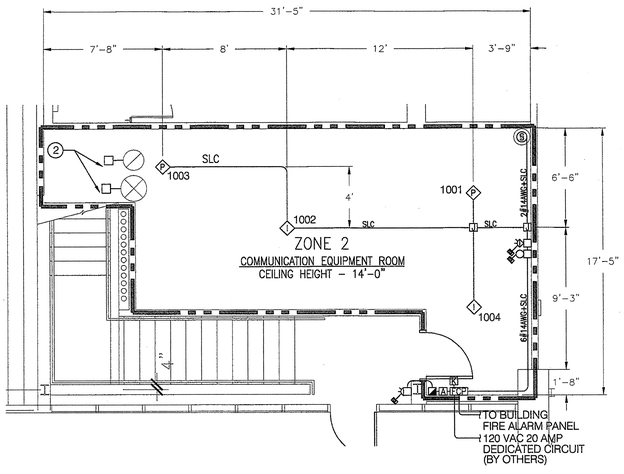

FM-200 SMOKE DETECTION PLAN

1/4" = 1'-0"

KEY NOTES:

1. 12"ø SUPPLY AND RETURN DUCTS WITH MOTORIZED 1% SMOKE RATED DAMPERS WHICH CLOSE ON A FM200 PRE-DISCHARGE CONDITION.
2. 20"ø SUPPLY AND 16"ø RETURN DUCTS WITH MOTORIZED 1% SMOKE RATED DAMPERS WHICH CLOSE ON A FM200 PRE-DISCHARGE CONDITION.
3. 16"ø TRANSFER DUCT WITH MOTORIZED 1% SMOKE RATED DAMPER WHICH CLOSES ON A FM200 PRE-DISCHARGE CONDITION.
4. 20"x68" SUPPLY AND 16"x58" RETURN DUCTS WITH MOTORIZED 1% SMOKE RATED DAMPERS WHICH CLOSE ON A FM200 PRE-DISCHARGE CONDITION.

GENERAL NOTES:
1. FOR ELECTRICAL NOTES SEE FP-1
2. FOR ELECTRICAL DETAILS SEE FP-6
3. FOR CONTROL PANEL WIRING SEE FP-5

SYMBOLS LEGEND

FCP	SYSTEM CONTROL PANEL
	FM-200 MANUAL RELEASE STATION
A	FM-200 DISCHARGE ABORT STATION
K	KEYED MAINTENANCE SWITCH
P	PHOTOELECTRIC SMOKE SENSOR IN SUBFLOOR
P	PHOTOELECTRIC SMOKE SENSOR IN ROOM
I	IONIZATION SMOKE SENSOR IN ROOM
SM	SYNC MODULE
	FIRST ALARM HORN/STROBE
	SECOND ALARM BELL
	DISCHARGE STROBE
	END-OF-LINE DEVICE
S	AGENT DISCHARGE SOLENOID
	AGENT STORAGE CYLINDER

NOTE: ALL MEASUREMENTS ARE DENOTED IN FEET AND INCHES UNLESS OTHERWISE SPECIFIED

DISCLAIMER:
All Information Contained Herein Is Confidential And The Exclusive Property Of Diversified Protection Systems, Inc., And Not To Be Reproduced In Whole Or Part, Nor Shall It Be Submitted To Any Outside Parties For Any Reason, Or Purpose Without The Expressed Written Consent Of Diversified Protection Systems, Inc.

Note: Contractors Must Take And Verify All Dimensions On The Job Before Proceeding With The Work.

LICENSED FIRE PROTECTION CONTRACTOR
CLASSIFICATION C-10 & C-16
LICENSE No. 703883
STATE OF CALIFORNIA

DPSI
DIVERSIFIED PROTECTION SYSTEMS INC
1241 NORTH BARSTEN WAY ANAHEIM, CA. 92806
PHONE: (714) 632-0929 FAX: (714) 632-0930
WWW.DPS-SC.COM

PROJECT:
ONTARIO POLICE DEPARTMENT
2500 ARCHIBALD AVENUE
ONTARIO, CA

SHEET TITLE:
DETECTION
CONTROLS

SITE LOCATION MAP:

KEY MAP:

REV	DATE	DESCRIPTION	BY
1	7/15	Revised Per Fire Dept. Corrections	SS

DATE: 05/28/03
SCALE: AS SHOWN
DRAWN BY: K.JACKSON
CHECKED BY: NONE
JOB NO.: 1161
JOB NAME: ONTARIO PD

TITLE: DETECTION & CONTROLS
DRAWING: FP-2
SHEET: 2 OF 7

JOB NAME: ONTARIO POLICE DEPARTMENT
JOB NUMBER: 1161

AS Built

X:\1161\Detail\FP-Rev1.d 7/2/15 1:45:28 PM, EPSG:6597#EPSG:mgcs.txt 1000GR (GRAY)

SYMBOLS LEGEND

- FM200 TANK
- PIPING ABOVE CEILING
- PIPING BELOW FLOOR
- 180° FM200 NOZZLE
- LATERAL PIPE BRACE
- LONGITUDINAL PIPE BRACE
- PIPE HANGER
- UNDERFLOOR PIPE BRACE

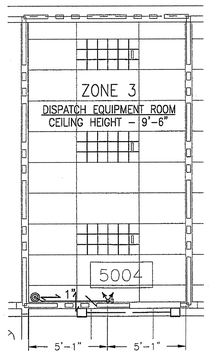

DISPATCH FM-200 PIPING PLAN
1/4" = 1'-0"

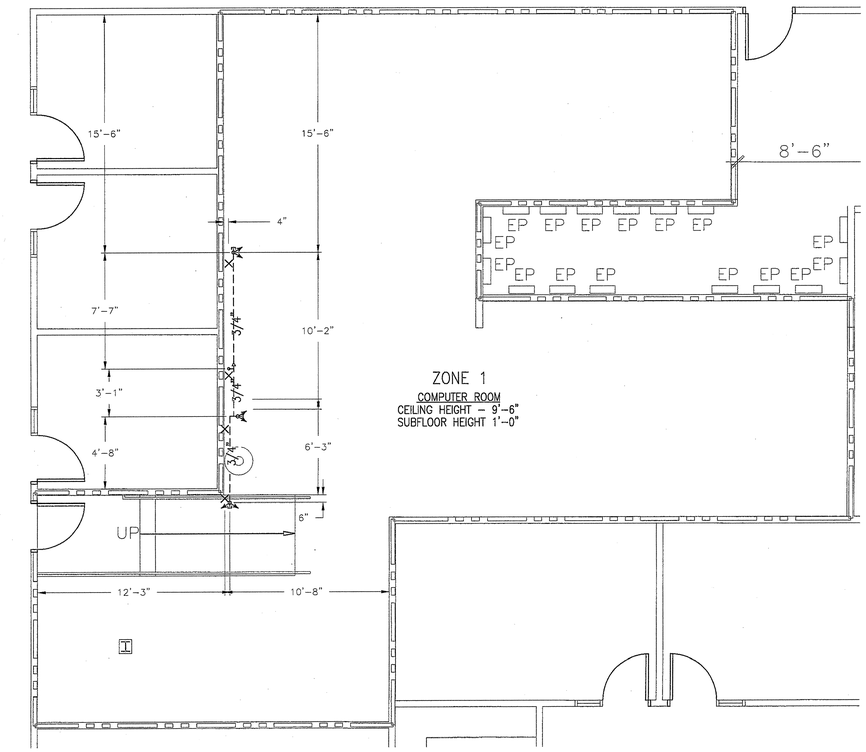

FM-200 PIPING PLAN (ROOM)
1/4" = 1'-0"

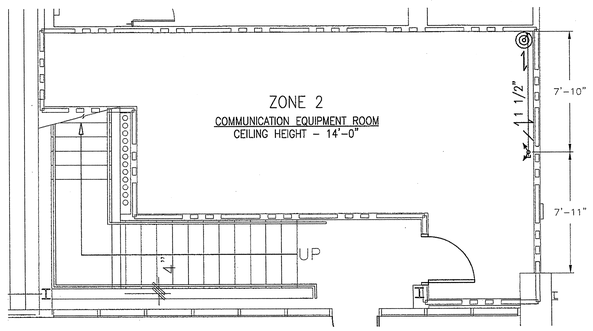

FM-200 PIPING PLAN
1/4" = 1'-0"

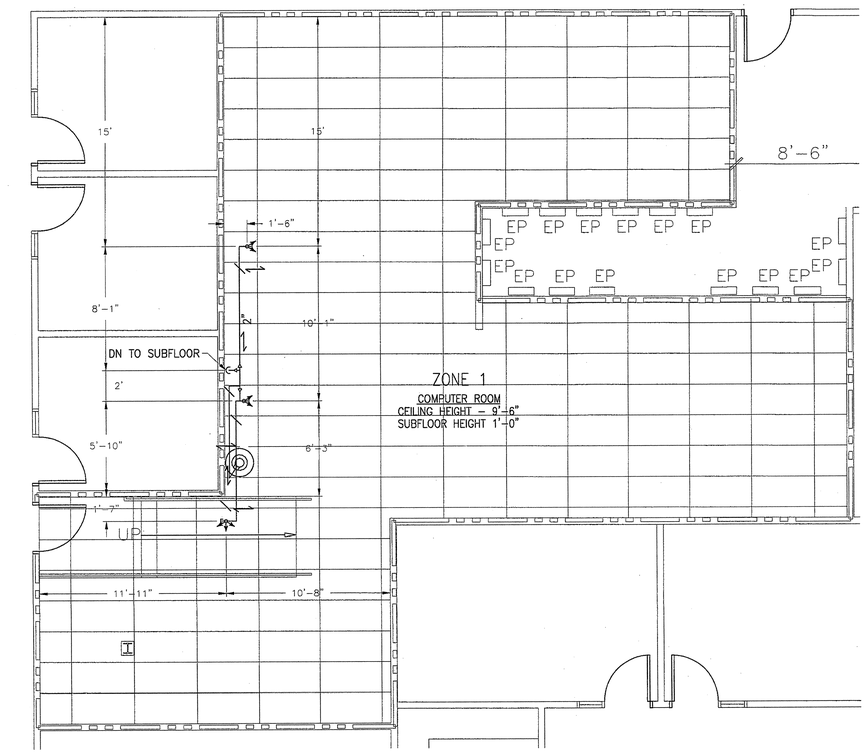

FM-200 PIPING PLAN (SUBFLOOR)
1/4" = 1'-0"

NOTE: ALL MEASUREMENTS ARE DENOTED IN FEET AND INCHES UNLESS OTHERWISE SPECIFIED

DISCLAIMER:
All Information Contained Herein Is Confidential And The Exclusive Property Of Diversified Protection Systems, Inc., And Not To Be Reproduced In Whole Or Part, Nor Shall It Be Submitted To Any Outside Parties For Any Reason, Or Purpose Without The Expressed Written Consent Of Diversified Protection Systems, Inc.

Note: Contractors Must Take And Verify All Dimensions On The Job Before Proceeding With The Work.

LICENSED FIRE PROTECTION CONTRACTOR
DIVERSIFIED PROTECTION SYSTEMS INC
CLASSIFICATION C-10 & C-16
LIC#/CSIE No. 703883
STATE OF CALIFORNIA

DPSI
DIVERSIFIED PROTECTION SYSTEMS INC
1241 NORTH BARSTEN WAY ANAHEIM, CA. 92806
PHONE: (714) 632-0929 FAX: (714) 632-0930
WWW.DPS-SC.COM

PROJECT:
ONTARIO POLICE DEPARTMENT
2500 ARCHIBALD AVENUE
ONTARIO, CA

SHEET TITLE:
FM-200 PIPING PLANS
AND ISOMETRICS

SITE LOCATION MAP:

KEY MAP:

REV	DATE	DESCRIPTION	BY
1	7/15	Revised Per Fire Dept. Corrections	SS

DATE: 05/28/03
SCALE: AS SHOWN
DRAWN BY: K.JACKSON
CHECKED BY: NONE
JOB NO.: 1161
JOB NAME: ONTARIO PD

TITLE: FM-200 PIPING PLANS
DRAWING: **FP-3**
SHEET: 3 OF 7

JOB NAME: ONTARIO POLICE DEPARTMENT AS-BUILT
JOB NUMBER: 1161

X:\1161\Dwgs\Port.dwg 7/29/2015 1:47:03 PM, 6250-5(DWG)\5(Dwg)\Job 1600\04 (5)(FP3)

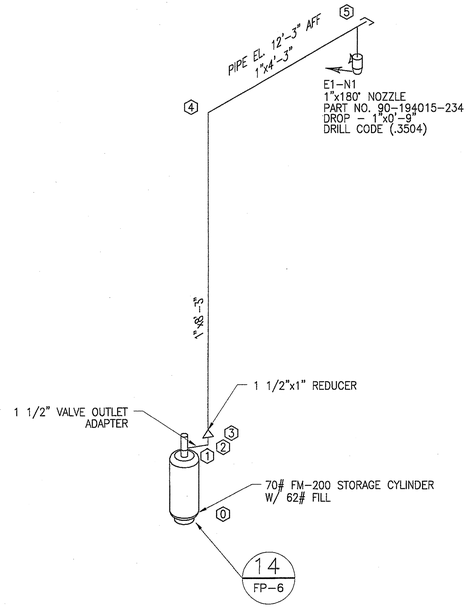

ZONE 3 PIPING ISOMETRIC

1/4" = 1'-0"

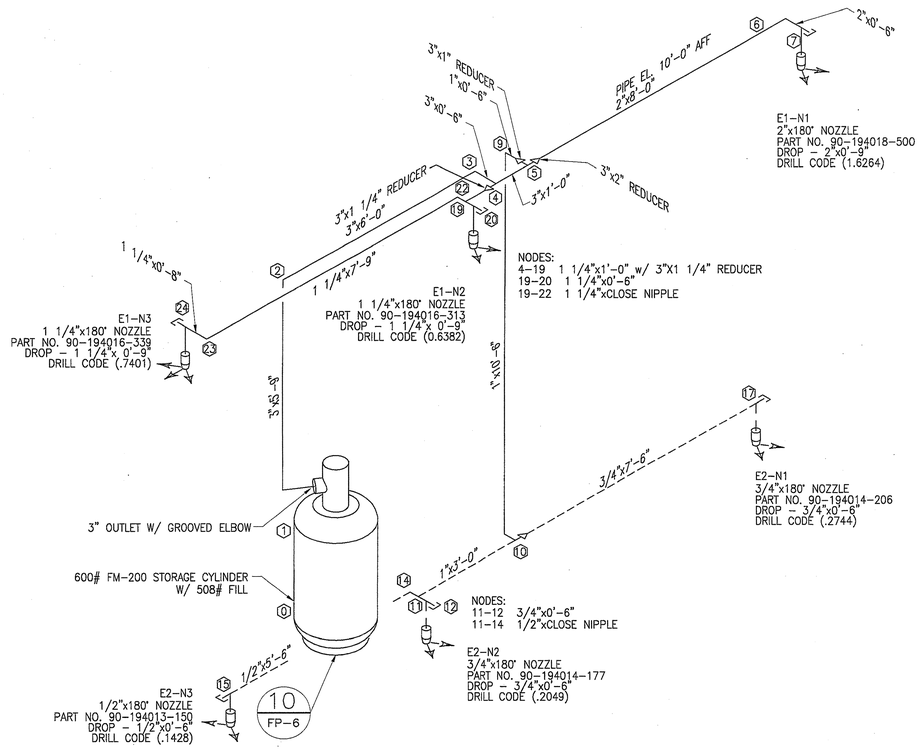

ZONE 1 PIPING ISOMETRIC

1/4" = 1'-0"

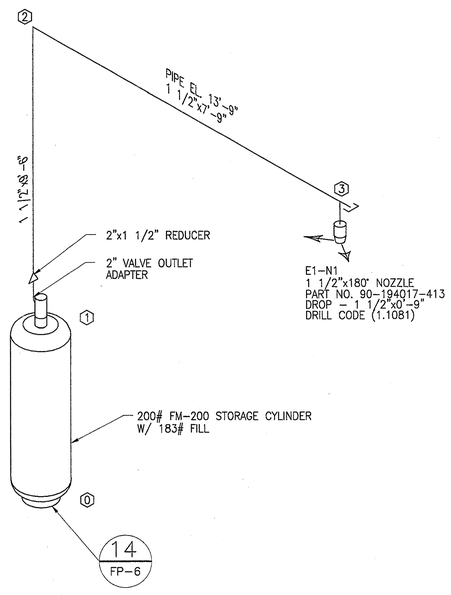

ZONE 2 PIPING ISOMETRIC

1/4" = 1'-0"

NOTE: ALL MEASUREMENTS ARE DENOTED IN FEET AND INCHES UNLESS OTHERWISE SPECIFIED

DISCLAIMER:

All Information Contained Herein Is Confidential And The Exclusive Property Of Diversified Protection Systems, Inc., And Not To Be Reproduced In Whole Or Part, Nor Shall It Be Submitted To Any Outside Parties For Any Reason, Or Purpose Without The Expressed Written Consent Of Diversified Protection Systems, Inc.

Note: Contractors Must Take And Verify All Dimensions On The Job Before Proceeding With The Work.

LICENSED FIRE PROTECTION CONTRACTOR — CLASSIFICATION: C-10 & C-16 LICENSE No. 703883 — STATE OF CALIFORNIA

DPSI DIVERSIFIED PROTECTION SYSTEMS INC
1241 NORTH BARSTEN WAY ANAHEIM, CA. 92806
PHONE: (714) 632-0929 FAX: (714) 632-0930 WWW.DPS-SC.COM

PROJECT:

ONTARIO POLICE DEPARTMENT
2500 ARCHIBALD AVENUE
ONTARIO, CA

SHEET TITLE:

FM-200 PIPING PLANS AND ISOMETRICS

SITE LOCATION MAP:

KEY MAP:

REV	DATE	DESCRIPTION	BY
1	7/15	Revised Per Fire Dept. Corrections	SS
2	8/26	Revised Per Ceiling Height Correction	SS

DATE: 05/28/03
SCALE: AS SHOWN
DRAWN BY: K.JACKSON
CHECKED BY: NONE
JOB NO.: 1161
JOB NAME: ONTARIO PD

TITLE: FM-200 PIPING PLANS
DRAWING: FP-4
SHEET: 4 OF 7

AS-BUILT
JOB NAME: ONTARIO POLICE DEPARTMENT
JOB NUMBER: 1161

X:\1161\Dwg\FP-Plans.dwg, 8/26/2015 8:47:28 PM, EPSON STYLUS PRO 7900 (3072dpi)

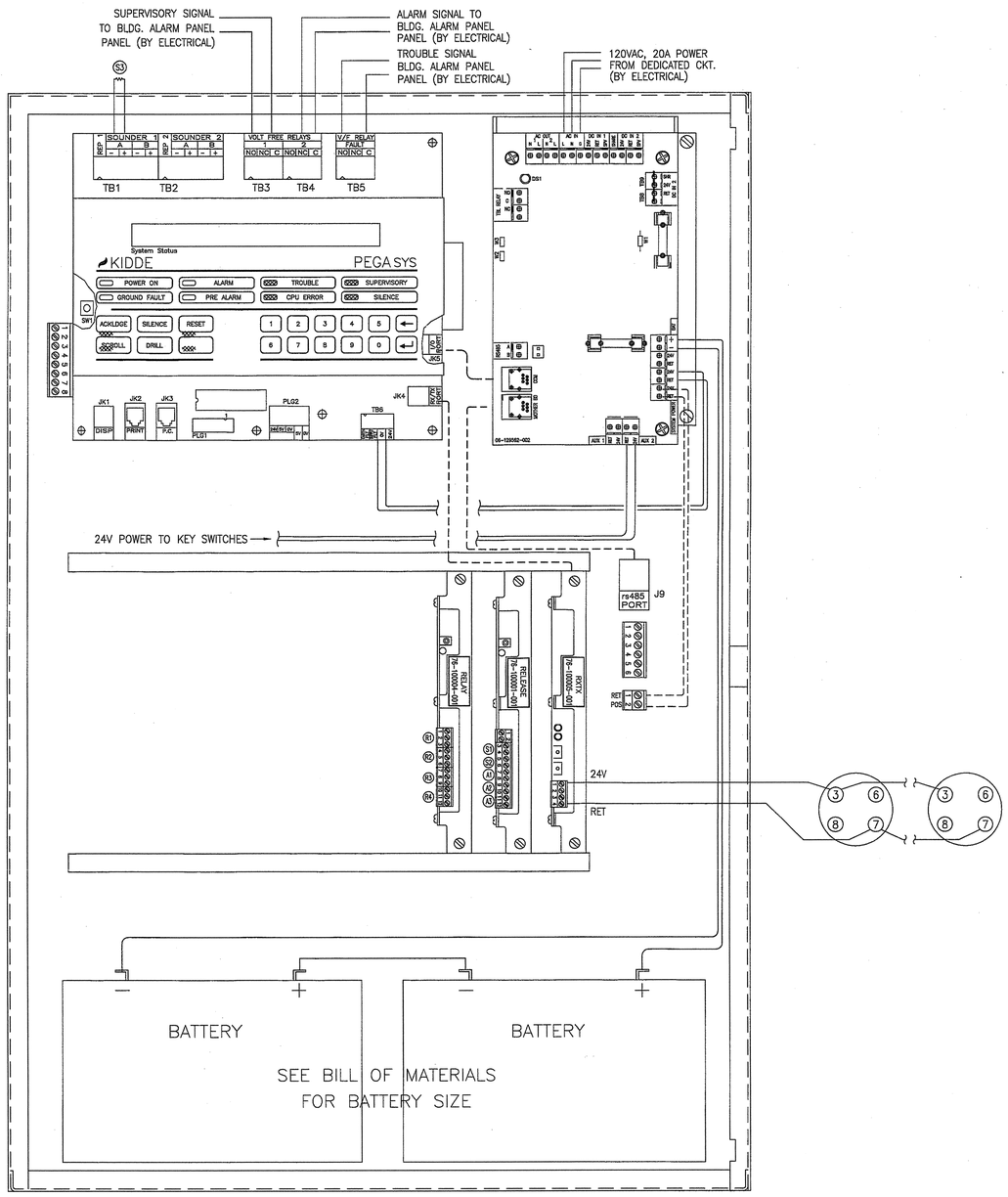

FM-200 CONTROL PANEL (TYP. OF 3)
SCALE: NONE

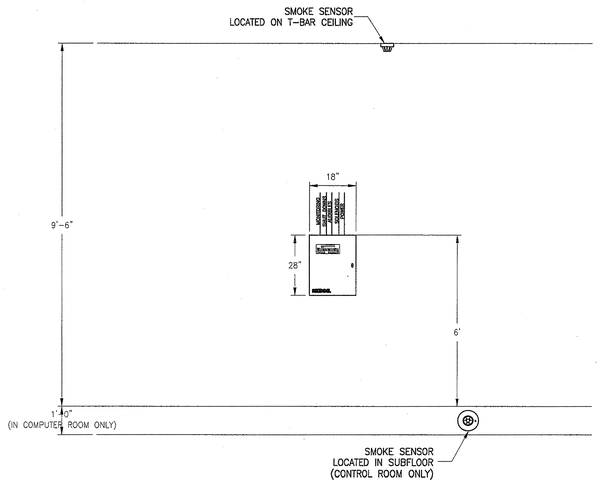

2 DEVICE ELEVATION DIAGRAM
NOT TO SCALE

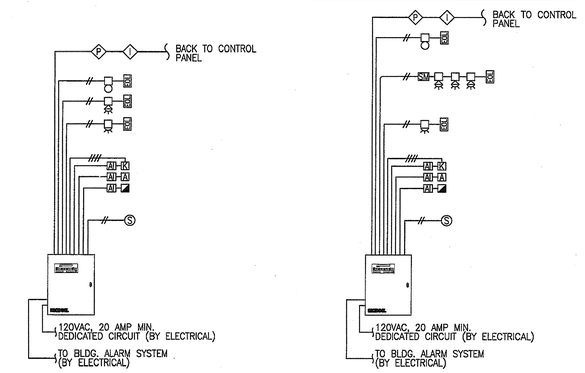

1 DEVICE RISER DIAGRAM
NOT TO SCALE

MODULE CONNECTION CHART		
ITEM	TYPE	DESCRIPTION
R1	RELAY	AIR SHUTDOWN (IF REQUIRED)
R2	RELAY	POWER SHUTDOWN
R3	RELAY	SPARE
R4	RELAY	SPARE
A1	AUDIBLE	FIRST ALARM HORN/STROBE
A2	AUDIBLE	SECOND ALARM BELL
A3	AUDIBLE	DISCHARGE STROBE
S1	SOLENOID	FM-200 SOLENOID
S2	SOLENOID	SPARE
S3	SOLENOID	SPARE

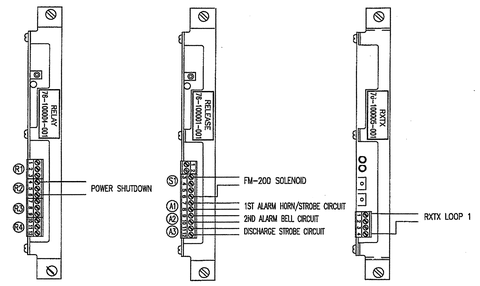

MODULE CONNECTION DIAGRAM
NO SCALE

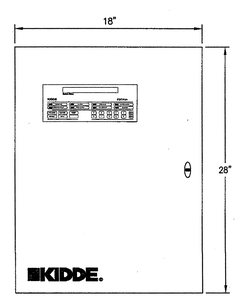

CONTROL PANEL DIMENSIONS

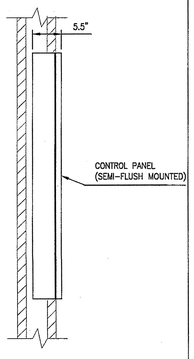

FLUSH MOUNT

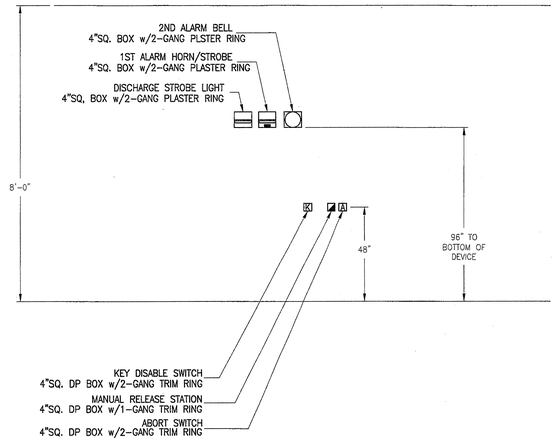

2 DEVICE ELEVATION DIAGRAM
NOT TO SCALE

NOTE: ALL MEASUREMENTS ARE DENOTED IN FEET AND INCHES UNLESS OTHERWISE SPECIFIED

DISCLAIMER:
All Information Contained Herein Is Confidential And The Exclusive Property Of Diversified Protection Systems, Inc., And Not To Be Reproduced In Whole Or Part, Nor Shall It Be Submitted To Any Outside Parties For Any Reason, Or Purpose Without The Expressed Written Consent Of Diversified Protection Systems, Inc.

Note: Contractors Must Take And Verify All Dimensions On The Job Before Proceeding With The Work.

LICENSED FIRE PROTECTION COMPANY
DIVERSIFIED PROTECTION SYSTEMS INC
CLASSIFICATION: C-10 & C-16
LICENSE NO. 703863
STATE OF CALIFORNIA
DPSI "DIVERSIFIED PROTECTION SYSTEMS INC"
1241 NORTH BARSTEN WAY ANAHEIM, CA. 92806
PHONE: (714) 632-0929 FAX: (714) 632-0930
WWW.DPS-SC.COM

PROJECT:
ONTARIO POLICE DEPARTMENT
2500 ARCHIBALD AVENUE
ONTARIO, CA

SHEET TITLE:
CONTROL PANEL
WIRING DIAGRAM

SITE LOCATION MAP:

KEY MAP:

REV	DATE	DESCRIPTION	BY
1	7/15	Revised Per Fire Dept. Corrections	SS

DATE: 05/28/03
SCALE: AS SHOWN
DRAWN BY: K.JACKSON
CHECKED BY: NONE
JOB NO.: 1161
JOB NAME: ONTARIO PD

TITLE: CONTROL PANEL WIRING DIAGRAM
DRAWING: FP-5
SHEET: 5 OF 7

AS-BUILT
JOB NAME: ONTARIO POLICE DEPARTMENT
JOB NUMBER: 1161

X:\1161\Dwg\FP-5.dwg 7-14-15 FAL 92806-SERVER\Design\Jak 1550CH (GENTEX)

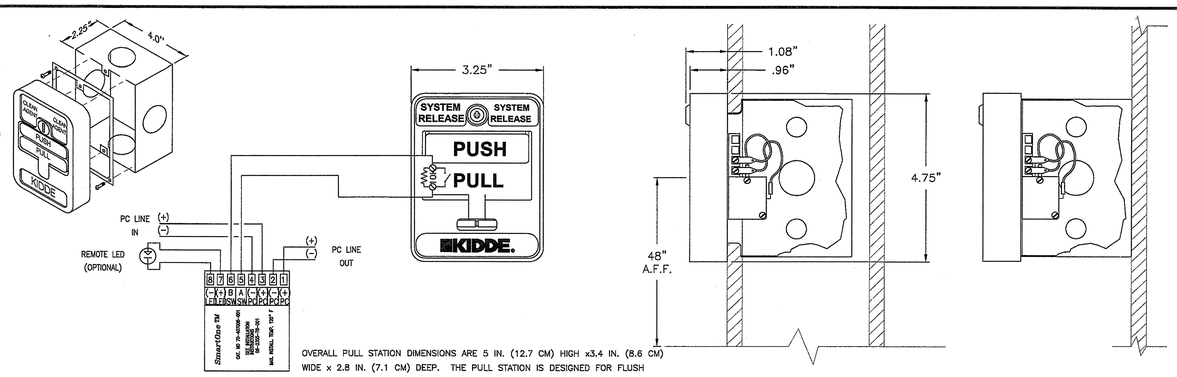

OVERALL PULL STATION DIMENSIONS ARE 5 IN. (12.7 CM) HIGH x3.4 IN. (8.6 CM) WIDE x 2.8 IN. (7.1 CM) DEEP. THE PULL STATION IS DESIGNED FOR FLUSH MOUNTING TO STANDARD FOUR INCH SQUARE WITH SINGLE GANG COVER.

TYP. RELEASE STATION | FLUSH MOUNT | SURFACE MOUNT

9

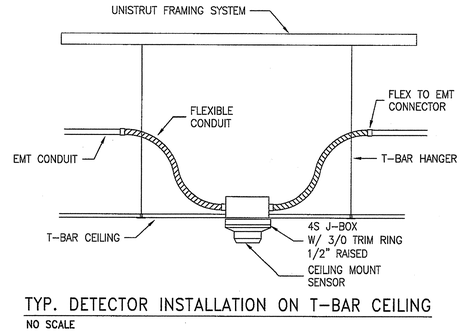

TYP. DETECTOR INSTALLATION ON T-BAR CEILING

NO SCALE

5

1

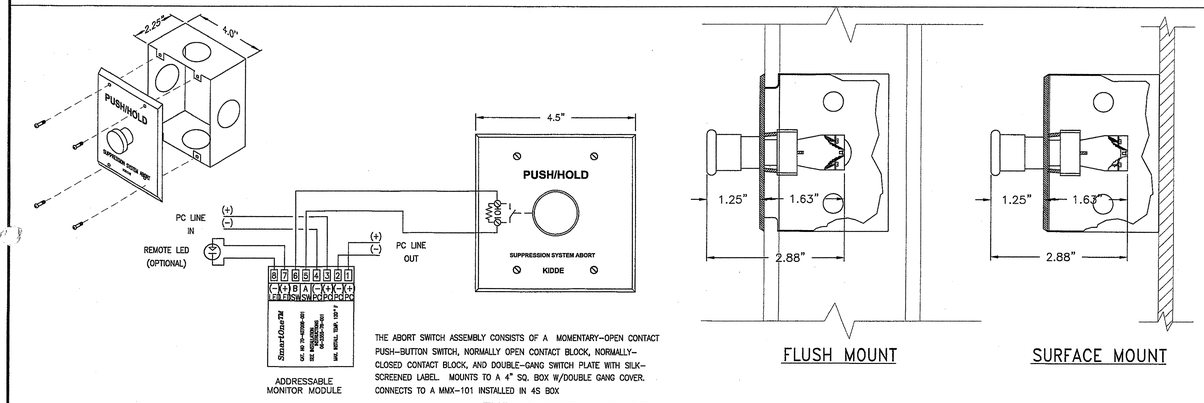

THE ABORT SWITCH ASSEMBLY CONSISTS OF A MOMENTARY-OPEN CONTACT PUSH-BUTTON SWITCH, NORMALLY OPEN CONTACT BLOCK, NORMALLY-CLOSED CONTACT BLOCK, AND DOUBLE-GANG SWITCH PLATE WITH SILK-SCREENED LABEL. MOUNTS TO A 4" SQ. BOX W/DOUBLE GANG COVER. CONNECTS TO A MMX-101 INSTALLED IN 4S BOX

TYP. SYSTEM ABORT | FLUSH MOUNT | SURFACE MOUNT

10

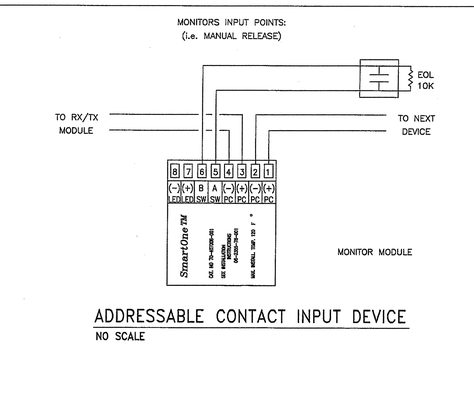

ADDRESSABLE CONTACT INPUT DEVICE

NO SCALE

6

2

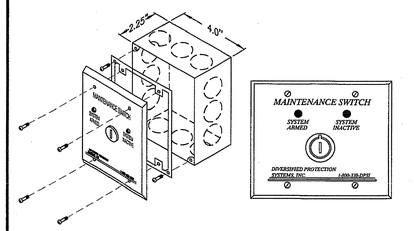

THE KEY SWITCH IS DESIGNED FOR FLUSH MOUNTING TO STD DEEP FOUR INCH SQUARE OUTLET WITH DOUBLE GANG RING

MAINTENANCE KEY DEVICE

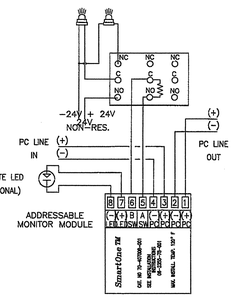

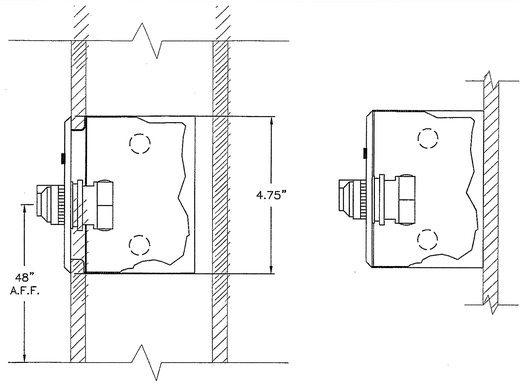

WALL MOUNT | SURFACE MOUNT

11

FM-200 MANUAL RELEASE PUSH & PULL	QTY = 3	WARNING FLASHING LIGHT INDICATES FM-200 HAS DISCHARGED DO NOT ENTER
FM-200 FIRST ALARM	QTY = 5	QTY = 3
FM-200 SECOND ALARM	QTY = 4	FM-200 ABORT PUSH & HOLD
		QTY = 3

SYSTEM SIGNS

7

3

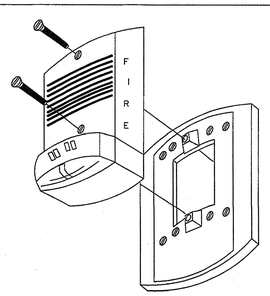

THIS DEVICE MOUNTS DIRECTLY TO A STANDARD FOUR INCH OUTLET OR SINGLE GANG BOX.

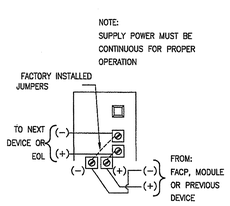

HORN/STROBE & STROBE DETAIL

NOTE: ALL MEASUREMENTS ARE DENOTED IN FEET AND INCHES UNLESS OTHERWISE SPECIFIED

16

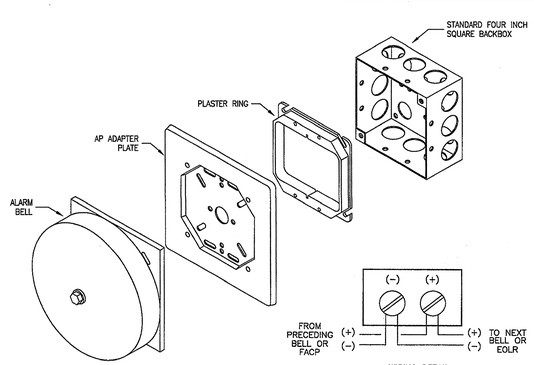

ALARM BELL

12

PROVIDES FORM-C DRY CONTACT INTERFACE FOR REMOTE CONTROL APPLICATIONS (i.e. POWER/AIR SHUTDOWNS)

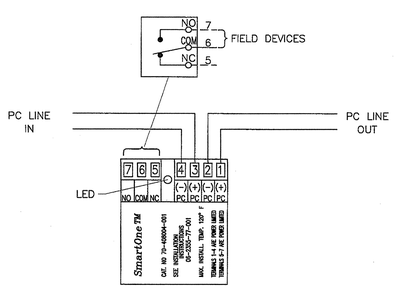

ADDRESSABLE CONTACT OUTPUT DEVICE

NO SCALE

8

4

JOB NAME: ONTARIO POLICE DEPARTMENT AS-BUILT

JOB NUMBER: 1161

X:\1161\Dwg\FP.dwg 5/28/03 PM, 8X11 (SERVER)\plotted 1:60(CM.CTB)(FIN)

DISCLAIMER:

All Information Contained Herein Is Confidential And The Exclusive Property Of Diversified Protection Systems, Inc., And Not To Be Reproduced In Whole Or Part, Nor Shall It Be Submitted To Any Outside Parties For Any Reason, Or Purpose Without The Expressed Written Consent Of Diversified Protection Systems, Inc.

Note: Contractors Must Take And Verify All Dimensions On The Job Before Proceeding With The Work.

LICENSED FIRE PROTECTION CONTRACTOR — DIVERSIFIED PROTECTION SYSTEMS INC. — CLASSIFICATION C-10 & C-16 LICENSE No. 703883 — STATE OF CALIFORNIA

DPSI DIVERSIFIED PROTECTION SYSTEMS INC

1241 NORTH BARSTEN WAY ANAHEIM, CA. 92806
PHONE: (714) 632-0929 FAX: (714) 632-0930 WWW.DPS-SC.COM

PROJECT:

ONTARIO POLICE DEPARTMENT
2500 ARCHIBALD AVENUE
ONTARIO, CA

SHEET TITLE:

ELECTRICAL PROJECT DETAILS SHEET

SITE LOCATION MAP:

KEY MAP:

REV	DATE	DESCRIPTION	BY
1	7/15	Revised Per Fire Dept. Corrections	SS

DATE: 05/28/03
SCALE: AS SHOWN
DRAWN BY: K.JACKSON
CHECKED BY: NONE
JOB NO.: 1161
JOB NAME: ONTARIO PD

TITLE: ELECTRICAL DETAILS
DRAWING: FP-6
SHEET: 6 OF 7

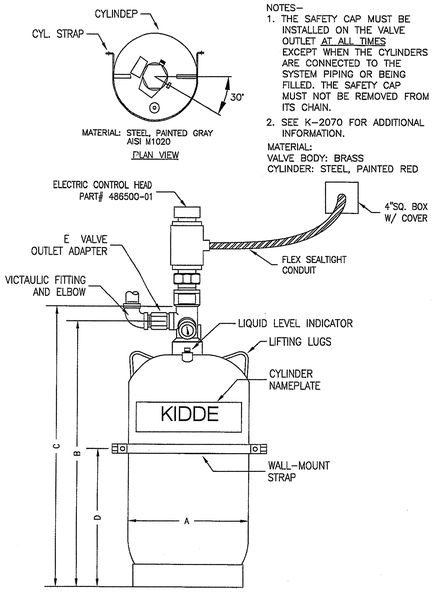

MATERIAL: STEEL, PAINTED GRAY AISI M1020

PLAN VIEW

NOTES–
1. THE SAFETY CAP MUST BE INSTALLED ON THE VALVE OUTLET AT ALL TIMES EXCEPT WHEN THE CYLINDERS ARE CONNECTED TO THE SYSTEM PIPING OR BEING FILLED. THE SAFETY CAP MUST NOT BE REMOVED FROM ITS CHAIN.
2. SEE K–2070 FOR ADDITIONAL INFORMATION.

MATERIAL:
VALVE BODY: BRASS
CYLINDER: STEEL, PAINTED RED

PART NUMBER	CYL. SIZE	DIMENSIONS A	B	C	D	E
90–100010–001	10 LBS	7.07	13.34	17.30	7.38	1 1/2"
90–100020–001	20 LBS	7.07	21.01	24.97	12.50	1 1/2"
90–100040–001	40 LBS	9.00	22.80	26.76	10.63	1 1/2"
→ 90–100070–001	70 LBS	9.00	34.87	38.83	20.00	1 1/2"
90–100121–001	125 LBS	12.75	32	36	20.85	1 1/2"
→ 90–100201–101	200 LBS	12.75	45.13	50.35	29.63	2"
90–100351–101	350 LBS	16	53.14	58.36	37.13	2"

* DIMENSIONS ARE IN INCHES

CYLINDER DETAIL

SCALE: NONE

14

NOTES–
1. THE SAFETY CAP MUST BE INSTALLED ON THE VALVE OUTLET AT ALL TIMES EXCEPT WHEN THE CYLINDERS ARE CONNECTED TO THE SYSTEM PIPING OR BEING FILLED. THE SAFETY CAP MUST NOT BE REMOVED FROM ITS CHAIN.
2. SEE K–2070 FOR ADDITIONAL INFORMATION.

MATERIAL:
VALVE BODY: BRASS
CYLINDER: STEEL, PAINTED RED

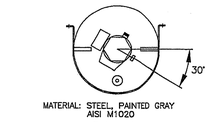

MATERIAL: STEEL, PAINTED GRAY AISI M1020

PLAN VIEW

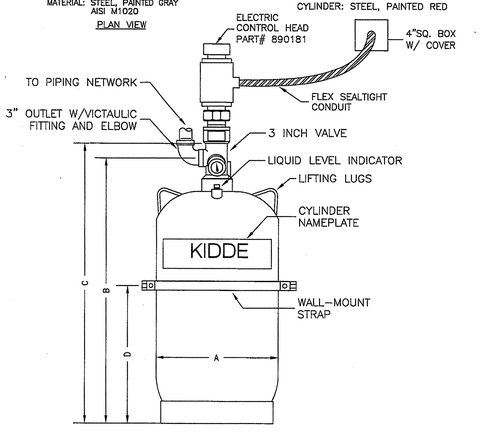

PART NUMBER	CYL. SIZE	DIMENSIONS A*	B*	C*	D*
→ 90–100601–100	600 LBS	22	50.5	56.72	34.00
90–100901–001	900 LBS	24	62	70	40

* DIMENSIONS ARE IN INCHES

600 & 900 LB. CYLINDER DETAIL

SCALE: NONE

NOTE: ALL MEASUREMENTS ARE DENOTED IN FEET AND INCHES UNLESS OTHERWISE SPECIFIED

10

PLAN SYMBOL

TRANSVERSE LATERAL BRACING (Figure 5)

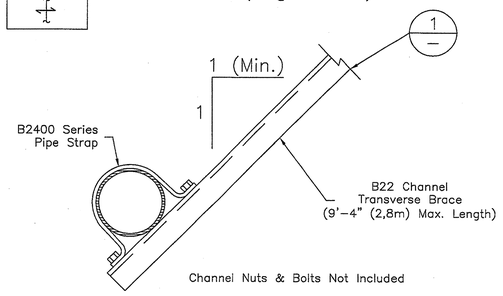

Channel Nuts & Bolts Not Included

Note: Install brace within 4" (101mm) of hanger. (Hanger not shown for clarity. See figure 6 below)

PLAN SYMBOL

LONGITUDINAL BRACING (Figure 6)

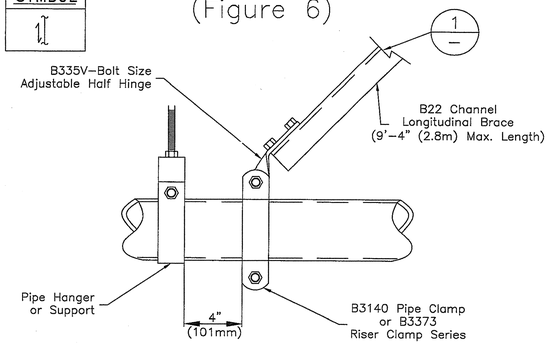

CONCRETE ATTACHMENTS

To Slab

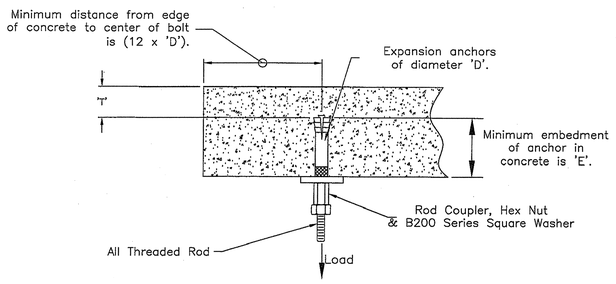

Diameter 'D' In.	(mm)	Allowable Load (In Tension) In.	(mm)	Minimum Embedment 'E' In.	(mm)	Minimum Embedment 'E' In.	(mm)
3/8"	(9)	605	(2.69)	2 1/2"	(63)	2 1/2"	(63)
1/2"	(13)	1000	(4.45)	3 1/2"	(89)	3 1/2"	(89)
5/8"	(16)	1335	(5.94)	4"	(101)	4"	(101)
3/4"	(19)	1940	(8.63)	4 3/4"	(120)	4 3/4"	(120)

*Hilti Kwik Bolt II in 3000 psi (20.7 MPa) minimum normal weight concrete.
Note: See B446 & B446C for a flexible connection which may be used when seismis bracing is not required.

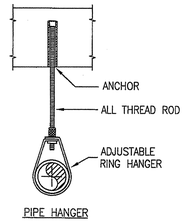

PIPE HANGER

PLAN SYMBOL

PIPE SUPPORT DETAIL

MAXIMUM DISTANCE BETWEEN HANGERS							
NOMINAL PIPE SIZE (in.)	3/4"	1"	1–1/4"	1–1/2"	2"	2–1/2"	3"
STEEL PIPE	N/A	12'	12'	15'	15'	15'	15'

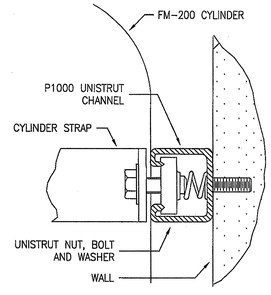

MOUNTING STRAP DETAIL

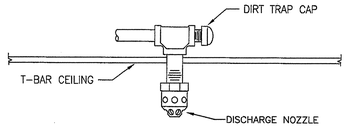

CEILING MOUNT

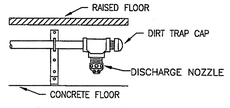

SUBFLOOR MOUNT

NOZZLE DETAILS

CONCRETE ATTACHMENTS

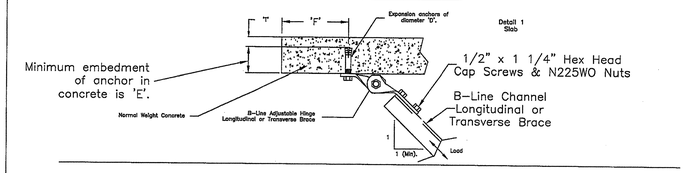

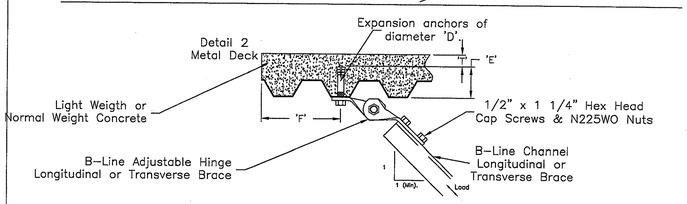

Light Weight or Normal Concrete Metal Deck

Structure Connection Type	Load		Anchor* Bolt Dia. 'D'		Minimum Embedment of Anchor in Concrete 'E' **		Minimum Distance Between Anchors		Minimum Distance From Edge To Center of Bolt 'F'		Minimum Concrete Coverage 'T'	
	Lbs.	(kN)	In.	(mm)	In.	(mm)	In.	(mm)	In.	(mm)	In.	(mm)
→ I	175	(0.78)	3/8"	(9.5)	2 1/4	(57.1)	6 2/3"	(169.3)	6 1/2"	(165.1)	3/4"	(19)
II, III	450	(2.00)	5/8"	(15.9)	4 1/2"	(114.3)	10 2/3"	(270.9)	11"	(279.4)	1 3/8"	(35)

*Hilti Kwik Bolt II in 3000 psi (20.7 MPa) minimum light weight concrete. **See important notes on page 23.

Normal Weight Concrete

Structure Connection Type	Load		Anchor* Bolt Dia. 'D'		Minimum Embedment of Anchor in Concrete 'E' **		Minimum Distance Between Anchors		Minimum Distance From Edge To Center of Bolt 'F'		Minimum Concrete Coverage 'T'	
	Lbs.	(kN)	In.	(mm)	In.	(mm)	In.	(mm)	In.	(mm)	In.	(mm)
→ I, II	300	(1.33)	3/8"	(9)	2 1/2"	(63)	5"	(127)	4 7/8"	(124)	3/4"	(19)
III	450	(2.00)	1/2"	(13)	3 1/2"	(89)	7"	(178)	6 3/4"	(171)	1 1/16"	(27)
IV	675	(3.00)	5/8"	(16)	4"	(101)	8"	(203)	8 1/4"	(209)	1 3/8"	(35)
V	975	(4.33)	3/4"	(19)	4 3/4"	(120)	9 1/2"	(241)	9 3/4"	(247)	1 7/16"	(36)

*Hilti Kwik Bolt II in 3000 psi (20.7 MPa) minimum normal weight concrete. **See important notes on page 23.

1

PLAN SYMBOL

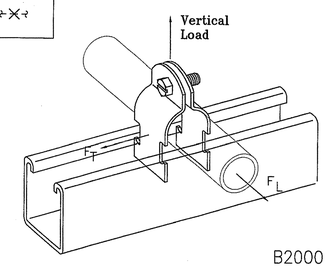

SEISMIC APPROVAL:
Attachment of Pipe, Tubing or Conduit to Transverse and Longitudinal Bracing of Pipe or Conduit.

Includes Slotted Hex Head Machine Screw and Square Nut

B2000 Series Pipe & Conduit Clamps

	Part No.	Size In.	(mm)	Bolt Size	Bolt Torque Ft–Lbs	(Nm)	Design Load* Vertical Lbs.	(kN)	F_T Lbs.	(kN)	F_L (Lbs.)	(kN)
EMT Conduit Sizes	B2001	1/2"	(15)	1/4"–20	6	(8.1)	400	(1.78)	75	(0.33)	50	(0.22)
	B2002	3/4"	(20)	1/4"–20	6	(8.1)	400	(1.78)	100	(0.44)	75	(0.33)
	B2003	1"	(25)	1/4"–20	6	(8.1)	600	(2.67)	100	(0.44)	75	(0.33)
	B2004	1 1/4"	(32)	1/4"–20	6	(8.1)	600	(2.67)	150	(0.67)	150	(0.67)
	B2005	1 1/2"	(40)	5/16"–18	9	(12.2)	800	(3.56)	250	(1.11)	150	(0.67)
	B2006	2"	(50)	5/16"–18	9	(12.2)	800	(3.56)	250	(1.11)	200	(0.89)
Rigid Conduit or Pipe Sizes	→ B2008	1/2"	(15)	1/4"–20	6	(8.1)	400	(1.78)	75	(0.33)	50	(0.22)
	→ B2009	3/4"	(20)	1/4"–20	6	(8.1)	600	(2.67)	100	(0.44)	75	(0.33)
	B2010	1"	(25)	1/4"–20	6	(8.1)	600	(2.67)	100	(0.44)	75	(0.33)
	B2011	1 1/4"	(32)	1/4"–20	6	(8.1)	800	(2.67)	150	(0.67)	150	(0.67)
	B2012	1 1/2"	(40)	5/16"–18	9	(12.2)	800	(3.56)	250	(1.11)	150	(0.67)
	B2013	2"	(50)	5/16"–18	9	(12.2)	800	(3.56)	250	(1.11)	200	(0.89)
	B2014	2 1/2"	(65)	5/16"–18	9	(12.2)	800	(3.56)	250	(1.11)	200	(0.89)
	B2015	3"	(80)	5/16"–18	9	(12.2)	800	(3.56)	250	(1.11)	200	(0.89)
	B2016	3 1/2"	(90)	5/16"–18	10	(13.5)	1000	(4.45)	350	(1.55)	200	(0.89)
	B2017	4"	(100)	5/16"–18	10	(13.5)	1000	(4.45)	350	(1.55)	250	(1.11)
	B2018	5"	(125)	5/16"–18	10	(13.5)	1000	(4.45)	450	(2.00)	250	(1.11)
	B2020	6"	(150)	3/8"–16	13	(17.6)	1000	(4.45)	450	(2.00)	250	(1.11)

F_T=Transverse Design Load F_L=Longitudinal Design Load *Minimum Safety Factor of 3.0

2

AS-BUILT

JOB NAME: ONTARIO POLICE DEPARTMENT

JOB NUMBER: 1161

DISCLAIMER:
All Information Contained Herein Is Confidential And The Exclusive Property Of Diversified Protection Systems, Inc., And Not To Be Reproduced In Whole Or Part, Nor Shall It Be Submitted To Any Outside Parties For Any Reason, Or Purpose Without The Expressed Written Consent Of Diversified Protection Systems, Inc.

Note: Contractors Must Take And Verify All Dimensions On The Job Before Proceeding With The Work.

LICENSED FIRE PROTECTION CONTRACTOR — CLASSIFICATION C-10 & C-16 LICENSE No. 703883 — STATE OF CALIFORNIA

DPSI DIVERSIFIED PROTECTION SYSTEMS INC
1241 NORTH BARSTEN WAY ANAHEIM, CA 92806
PHONE: (714) 632-0929 FAX: (714) 632-0930
WWW.DPS-SC.COM

PROJECT:
ONTARIO POLICE DEPARTMENT
2500 ARCHIBALD AVENUE
ONTARIO, CA

SHEET TITLE:
MECHANICAL PROJECT DETAILS SHEET

SITE LOCATION MAP:

KEY MAP:

REV	DATE	DESCRIPTION	BY
1	7/15	Revised Per Fire Dept. Corrections	SS

DATE: 5/28/03
SCALE: AS SHOWN
DRAWN BY: K.JACKSON
CHECKED BY: NONE
JOB NO.: 1161
JOB NAME: ONTARIO PD

TITLE: MECHANICAL DETAILS
DRAWING: FP-7
SHEET: 7 OF 7

X:\1161\Dwg\FP7.dwg 5/5/2004 1:55:33 PM, EZHO-SERVER\hp4si 1100C/4 (DEFAULT)

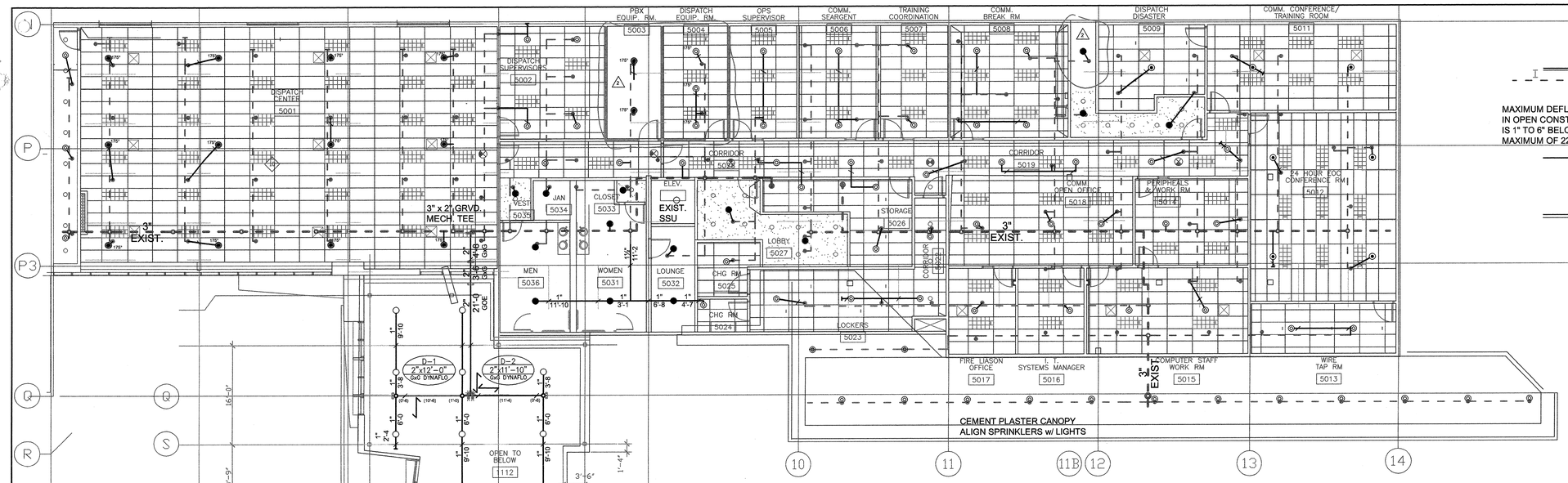

UPPER LEVEL PIPING PLAN
scale 1/8" = 1'-0"

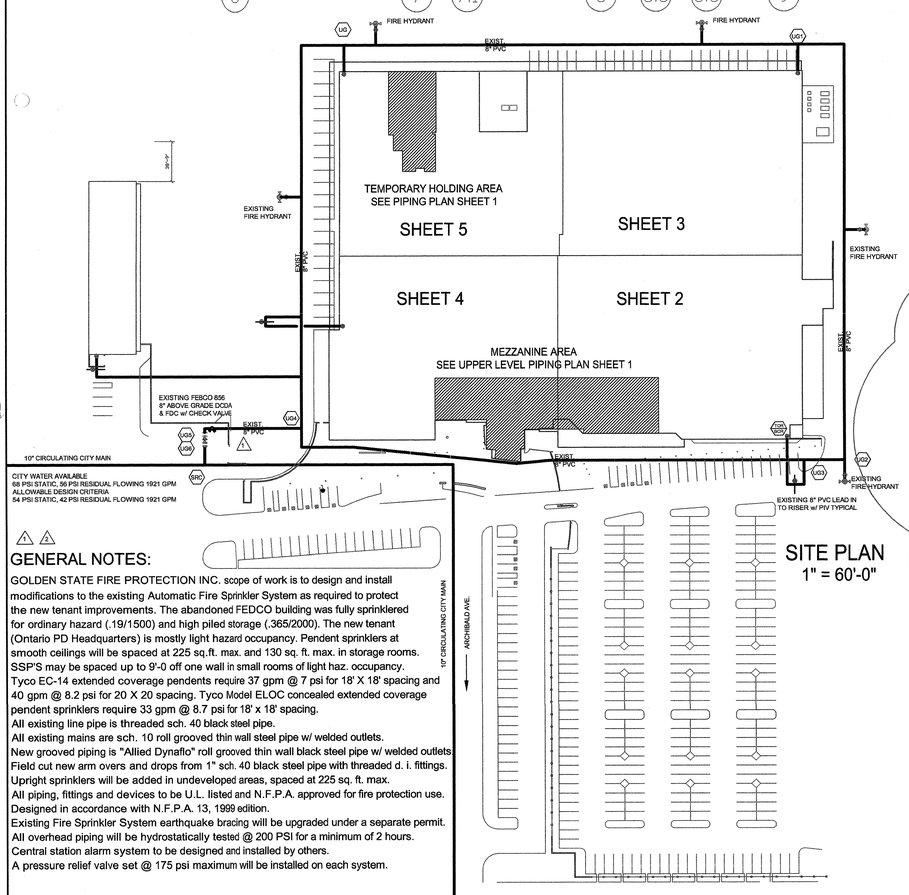

SITE PLAN
1" = 60'-0"

CITY WATER AVAILABLE
66 PSI STATIC, 56 PSI RESIDUAL FLOWING 1921 GPM
ALLOWABLE DESIGN CRITERIA
54 PSI STATIC, 42 PSI RESIDUAL FLOWING 1921 GPM

GENERAL NOTES:

GOLDEN STATE FIRE PROTECTION INC. scope of work is to design and install modifications to the existing Automatic Fire Sprinkler System as required to protect the new tenant improvements. The abandoned FEDCO building was fully sprinklered for ordinary hazard (.19/1500) and high piled storage (.365/2000). The new tenant (Ontario PD Headquarters) is mostly light hazard occupancy. Pendent sprinklers at smooth ceilings will be spaced at 225 sq.ft. max. and 130 sq. ft. max. in storage rooms. SSP'S may be spaced up to 9'-0 off one wall in small rooms of light haz. occupancy. Tyco EC-14 extended coverage pendents require 37 gpm @ 7 psi for 18' X 18' spacing and 40 gpm @ 8.2 psi for 20 X 20 spacing. Tyco Model ELOC concealed extended coverage pendent sprinklers require 33 gpm @ 8.7 psi for 18' x 18' spacing.
All existing line pipe is threaded sch. 40 black steel pipe.
All existing mains are sch. 10 roll grooved thin wall steel pipe w/ welded outlets.
New grooved piping is "Allied Dynaflo" roll grooved thin wall black steel pipe w/ welded outlets
Field cut new arm overs and drops from 1" sch. 40 black steel pipe with threaded d. i. fittings.
Upright sprinklers will be added in undeveloped areas, spaced at 225 sq. ft. max.
All piping, fittings and devices to be U.L. listed and N.F.P.A. approved for fire protection use.
Designed in accordance with N.F.P.A. 13, 1999 edition.
Existing Fire Sprinkler System earthquake bracing will be upgraded under a separate permit.
All overhead piping will be hydrostatically tested @ 200 PSI for a minimum of 2 hours.
Central station alarm system to be designed and installed by others.
A pressure relief valve set @ 175 psi maximum will be installed on each system.

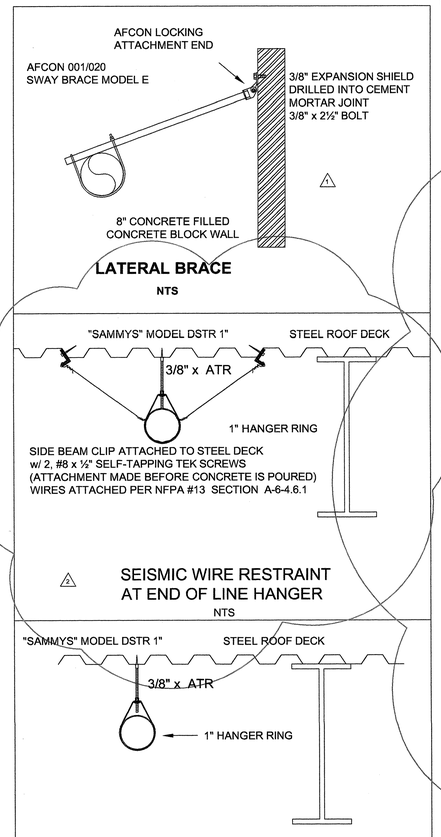

BRACE	LATERAL / LONG	PIPE SIZE	WEIGHT OF PIPE WITH H20	Ø FACTOR	ANGLE	HORIZONTAL LOAD	CONSTRUCTION TYPE	FASTNER TYPE	BRACE MATERIAL	MAX. LOAD
#1	LATERAL	2½"-10'	5.1 #	0.5	C 60-90°	51 #	CONC. BLOCK	3/8"-2½" BOLT	1" SCH. 40	865 #
		1½"-10'	3.61 #	0.5		92 #				
		1¼"-10'	2.63 #	0.5		50 #				
		1"-10'	2.04 #	0.5		119 #				
		2"-10'		TOTAL		312 #	STEEL I BEAM	3/8" x 1" THRU BOLT		1455 #
	LONGITUDAL	2½"-10'	5.1 #	0.5	C 60-90°	128#			1" SCH. 40	
#2	50' LONGITUDAL	2½"-10'								

EARTHQUAKE BRACE CALCULATIONS

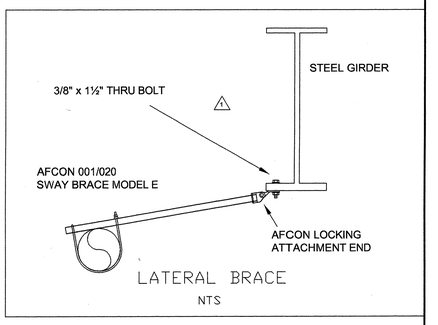

SECTION A
scale 1/8" = 1'-0"

AS BUILT
By DL Date 1-27-04

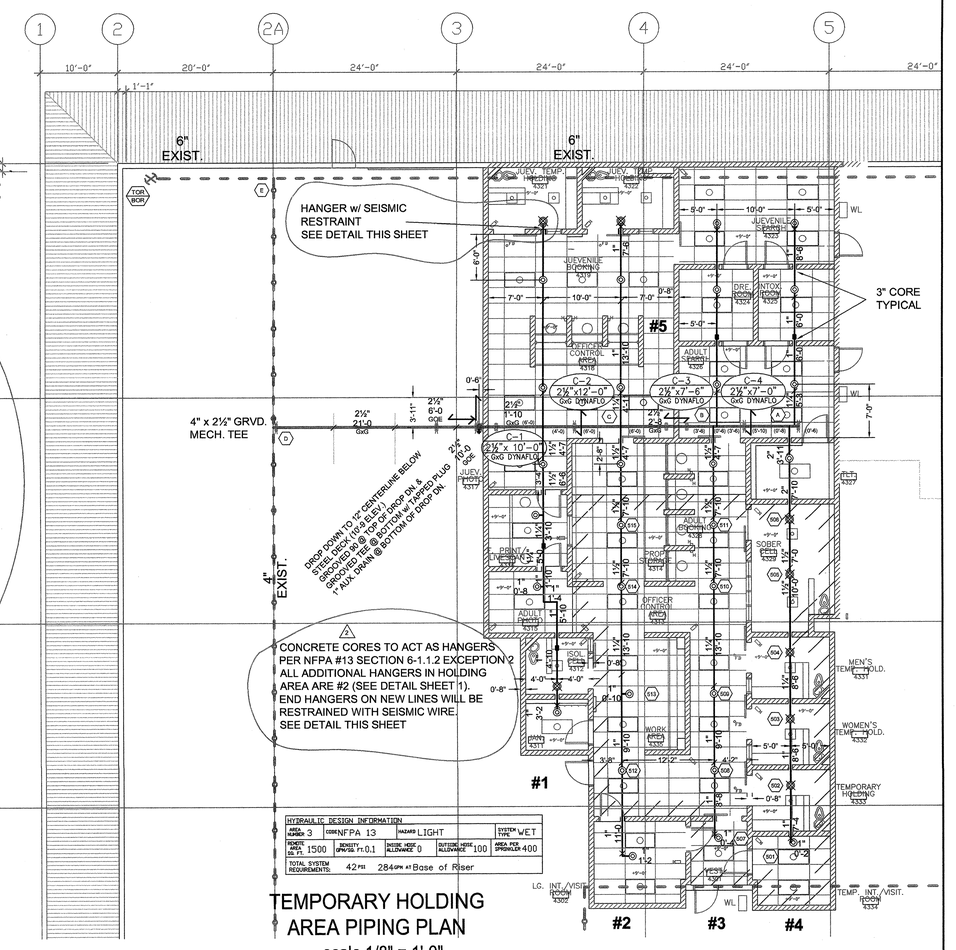
1
2
2A
3
4
5
A
B
C
D
10'-0"
20'-0"
24'-0"
1'-1"
6" EXIST.
HANGER w/ SEISMIC RESTRAINT SEE DETAIL THIS SHEET
3" CORE TYPICAL
4" x 2½" GRVD. MECH. TEE
4" EXIST.
DROP DOWN TO 12" CENTERLINE BELOW STEEL DECK @ 10'-0 SLEEVE GROOVED END @ TOP OF DROP PIN & GROOVED TEE @ TOP OF DROP W/ TAPPED PLUG 1" AUX. DRAIN @ BOTTOM OF DROP ON
CONCRETE CORES TO ACT AS HANGERS PER NFPA #13 SECTION 6-1.1.2 EXCEPTION 2 ALL ADDITIONAL HANGERS IN HOLDING AREA ARE #2 (SEE DETAIL SHEET 1). END HANGERS ON NEW LINES WILL BE RESTRAINED WITH SEISMIC WIRE. SEE DETAIL THIS SHEET
#1
#2
#3
#4
#5
JUVENILE BOOKING 4321
JUVENILE PROCESSING 4322
DRE ROOM 4324
INTOX ROOM 4325
ADULT BOOKING 4318
ADULT PROCESSING 4319
JUVEN. TEMP. HOLDING 4327
BREATH ALCOHOL 4328
SOBER CELL 4329
PROP STORAGE 4312
OFFICER CONTROL 4313
ADULT PROCESSING 4311
ISOL. 4317
WORK 4314
MEN'S TEMP. HOLD. 4331
WOMEN'S TEMP. HOLD. 4332
TEMPORARY HOLDING 4333
LG. INT./VISIT. ROOM 4302
TEMP. INT. VISIT. ROOM 4334
C–1 2½"x12'–0" GxG DYNAFLO
C–2 2½"x7'–6" GxG DYNAFLO
C–3 2½"x7'–0" GxG DYNAFLO
C–4 2½"x10'–0" GxG DYNAFLO
C–5 2½"x10'–0" GxG DYNAFLO
2½" 21'-0 GxG
2½" 6'-0 GxG
2½" 1'-10 GxG
2½" 3'-11" GxG
2½" 4'-6" GxG
2½" 3'-10" GxG
2½" 4'-0" GxG
2½" 4'-1" GxG
2½" 4'-2" GxG
2½" 4'-3" GxG
2½" 4'-4" GxG
2½" 4'-5" GxG
2½" 4'-7" GxG
2½" 4'-8" GxG
2½" 4'-9" GxG
2½" 4'-10" GxG
2½" 4'-11" GxG
2½" 5'-0" GxG
2½" 5'-1" GxG
2½" 5'-2" GxG
2½" 5'-3" GxG
2½" 5'-4" GxG
2½" 5'-5" GxG
2½" 5'-6" GxG
2½" 5'-7" GxG
2½" 5'-8" GxG
2½" 5'-9" GxG
2½" 5'-10" GxG
2½" 5'-11" GxG
2½" 6'-0" GxG
2½" 6'-1" GxG
2½" 6'-2" GxG
2½" 6'-3" GxG
2½" 6'-4" GxG
2½" 6'-5" GxG
2½" 6'-6" GxG
2½" 6'-7" GxG
2½" 6'-8" GxG
2½" 6'-9" GxG
2½" 6'-10" GxG
2½" 6'-11" GxG
2½" 7'-0" GxG
2½" 7'-1" GxG
2½" 7'-2" GxG
2½" 7'-3" GxG
2½" 7'-4" GxG
2½" 7'-5" GxG
2½" 7'-6" GxG
2½" 7'-7" GxG
2½" 7'-8" GxG
2½" 7'-9" GxG
2½" 7'-10" GxG
2½" 7'-11" GxG
2½" 8'-0" GxG
2½" 8'-1" GxG
2½" 8'-2" GxG
2½" 8'-3" GxG
2½" 8'-4" GxG
2½" 8'-5" GxG
2½" 8'-6" GxG
2½" 8'-7" GxG
2½" 8'-8" GxG
2½" 8'-9" GxG
2½" 8'-10" GxG
2½" 8'-11" GxG
2½" 9'-0" GxG
2½" 9'-1" GxG
2½" 9'-2" GxG
2½" 9'-3" GxG
2½" 9'-4" GxG
2½" 9'-5" GxG
2½" 9'-6" GxG
2½" 9'-7" GxG
2½" 9'-8" GxG
2½" 9'-9" GxG
2½" 9'-10" GxG
2½" 9'-11" GxG
2½" 10'-0" GxG
2½" 10'-1" GxG
2½" 10'-2" GxG
2½" 10'-3" GxG
2½" 10'-4" GxG
2½" 10'-5" GxG
2½" 10'-6" GxG
2½" 10'-7" GxG
2½" 10'-8" GxG
2½" 10'-9" GxG
2½" 10'-10" GxG
2½" 10'-11" GxG
2½" 11'-0" GxG
2½" 11'-1" GxG
2½" 11'-2" GxG
2½" 11'-3" GxG
2½" 11'-4" GxG
2½" 11'-5" GxG
2½" 11'-6" GxG
2½" 11'-7" GxG
2½" 11'-8" GxG
2½" 11'-9" GxG
2½" 11'-10" GxG
2½" 11'-11" GxG
2½" 12'-0" GxG
2½" 12'-1" GxG
2½" 12'-2" GxG
2½" 12'-3" GxG
2½" 12'-4" GxG
2½" 12'-5" GxG
2½" 12'-6" GxG
2½" 12'-7" GxG
2½" 12'-8" GxG
2½" 12'-9" GxG
2½" 12'-10" GxG
2½" 12'-11" GxG
2½" 13'-0" GxG
2½" 13'-1" GxG
2½" 13'-2" GxG
2½" 13'-3" GxG
2½" 13'-4" GxG
2½" 13'-5" GxG
2½" 13'-6" GxG
2½" 13'-7" GxG
2½" 13'-8" GxG
2½" 13'-9" GxG
2½" 13'-10" GxG
2½" 13'-11" GxG
2½" 14'-0" GxG
2½" 14'-1" GxG
2½" 14'-2" GxG
2½" 14'-3" GxG
2½" 14'-4" GxG
2½" 14'-5" GxG
2½" 14'-6" GxG
2½" 14'-7" GxG
2½" 14'-8" GxG
2½" 14'-9" GxG
2½" 14'-10" GxG
2½" 14'-11" GxG
2½" 15'-0" GxG
2½" 15'-1" GxG
2½" 15'-2" GxG
2½" 15'-3" GxG
2½" 15'-4" GxG
2½" 15'-5" GxG
2½" 15'-6" GxG
2½" 15'-7" GxG
2½" 15'-8" GxG
2½" 15'-9" GxG
2½" 15'-10" GxG
2½" 15'-11" GxG
2½" 16'-0" GxG
2½" 16'-1" GxG
2½" 16'-2" GxG
2½" 16'-3" GxG
2½" 16'-4" GxG
2½" 16'-5" GxG
2½" 16'-6" GxG
2½" 16'-7" GxG
2½" 16'-8" GxG
2½" 16'-9" GxG
2½" 16'-10" GxG
2½" 16'-11" GxG
2½" 17'-0" GxG
2½" 17'-1" GxG
2½" 17'-2" GxG
2½" 17'-3" GxG
2½" 17'-4" GxG
2½" 17'-5" GxG
2½" 17'-6" GxG
2½" 17'-7" GxG
2½" 17'-8" GxG
2½" 17'-9" GxG
2½" 17'-10" GxG
2½" 17'-11" GxG
2½" 18'-0" GxG
2½" 18'-1" GxG
2½" 18'-2" GxG
2½" 18'-3" GxG
2½" 18'-4" GxG
2½" 18'-5" GxG
2½" 18'-6" GxG
2½" 18'-7" GxG
2½" 18'-8" GxG
2½" 18'-9" GxG
2½" 18'-10" GxG
2½" 18'-11" GxG
2½" 19'-0" GxG
2½" 19'-1" GxG
2½" 19'-2" GxG
2½" 19'-3" GxG
2½" 19'-4" GxG
2½" 19'-5" GxG
2½" 19'-6" GxG
2½" 19'-7" GxG
2½" 19'-8" GxG
2½" 19'-9" GxG
2½" 19'-10" GxG
2½" 19'-11" GxG
2½" 20'-0" GxG
2½" 20'-1" GxG
2½" 20'-2" GxG
2½" 20'-3" GxG
2½" 20'-4" GxG
2½" 20'-5" GxG
2½" 20'-6" GxG
2½" 20'-7" GxG
2½" 20'-8" GxG
2½" 20'-9" GxG
2½" 20'-10" GxG
2½" 20'-11" GxG
2½" 21'-0" GxG
2½" 21'-1" GxG
2½" 21'-2" GxG
2½" 21'-3" GxG
2½" 21'-4" GxG
2½" 21'-5" GxG
2½" 21'-6" GxG
2½" 21'-7" GxG
2½" 21'-8" GxG
2½" 21'-9" GxG
2½" 21'-10" GxG
2½" 21'-11" GxG
2½" 22'-0" GxG
2½" 22'-1" GxG
2½" 22'-2" GxG
2½" 22'-3" GxG
2½" 22'-4" GxG
2½" 22'-5" GxG
2½" 22'-6" GxG
2½" 22'-7" GxG
2½" 22'-8" GxG
2½" 22'-9" GxG
2½" 22'-10" GxG
2½" 22'-11" GxG
2½" 23'-0" GxG
2½" 23'-1" GxG
2½" 23'-2" GxG
2½" 23'-3" GxG
2½" 23'-4" GxG
2½" 23'-5" GxG
2½" 23'-6" GxG
2½" 23'-7" GxG
2½" 23'-8" GxG
2½" 23'-9" GxG
2½" 23'-10" GxG
2½" 23'-11" GxG
2½" 24'-0" GxG
2½" 24'-1" GxG
2½" 24'-2" GxG
2½" 24'-3" GxG
2½" 24'-4" GxG
2½" 24'-5" GxG
2½" 24'-6" GxG
2½" 24'-7" GxG
2½" 24'-8" GxG
2½" 24'-9" GxG
2½" 24'-10" GxG
2½" 24'-11" GxG
2½" 25'-0" GxG
2½" 25'-1" GxG
2½" 25'-2" GxG
2½" 25'-3" GxG
2½" 25'-4" GxG
2½" 25'-5" GxG
2½" 25'-6" GxG
2½" 25'-7" GxG
2½" 25'-8" GxG
2½" 25'-9" GxG
2½" 25'-10" GxG
2½" 25'-11" GxG
2½" 26'-0" GxG
2½" 26'-1" GxG
2½" 26'-2" GxG
2½" 26'-3" GxG
2½" 26'-4" GxG
2½" 26'-5" GxG
2½" 26'-6" GxG
2½" 26'-7" GxG
2½" 26'-8" GxG
2½" 26'-9" GxG
2½" 26'-10" GxG
2½" 26'-11" GxG
2½" 27'-0" GxG
2½" 27'-1" GxG
2½" 27'-2" GxG
2½" 27'-3" GxG
2½" 27'-4" GxG
2½" 27'-5" GxG
2½" 27'-6" GxG
2½" 27'-7" GxG
2½" 27'-8" GxG
2½" 27'-9" GxG
2½" 27'-10" GxG
2½" 27'-11" GxG
2½" 28'-0" GxG
2½" 28'-1" GxG
2½" 28'-2" GxG
2½" 28'-3" GxG
2½" 28'-4" GxG
2½" 28'-5" GxG
2½" 28'-6" GxG
2½" 28'-7" GxG
2½" 28'-8" GxG
2½" 28'-9" GxG
2½" 28'-10" GxG
2½" 28'-11" GxG
2½" 29'-0" GxG
2½" 29'-1" GxG
2½" 29'-2" GxG
2½" 29'-3" GxG
2½" 29'-4" GxG
2½" 29'-5" GxG
2½" 29'-6" GxG
2½" 29'-7" GxG
2½" 29'-8" GxG
2½" 29'-9" GxG
2½" 29'-10" GxG
2½" 29'-11" GxG
2½" 30'-0" GxG
2½" 30'-1" GxG
2½" 30'-2" GxG
2½" 30'-3" GxG
2½" 30'-4" GxG
2½" 30'-5" GxG
2½" 30'-6" GxG
2½" 30'-7" GxG
2½" 30'-8" GxG
2½" 30'-9" GxG
2½" 30'-10" GxG
2½" 30'-11" GxG
2½" 31'-0" GxG
2½" 31'-1" GxG
2½" 31'-2" GxG
2½" 31'-3" GxG
2½" 31'-4" GxG
2½" 31'-5" GxG
2½" 31'-6" GxG
2½" 31'-7" GxG
2½" 31'-8" GxG
2½" 31'-9" GxG
2½" 31'-10" GxG
2½" 31'-11" GxG
2½" 32'-0" GxG
2½" 32'-1" GxG
2½" 32'-2" GxG
2½" 32'-3" GxG
2½" 32'-4" GxG
2½" 32'-5" GxG
2½" 32'-6" GxG
2½" 32'-7" GxG
2½" 32'-8" GxG
2½" 32'-9" GxG
2½" 32'-10" GxG
2½" 32'-11" GxG
2½" 33'-0" GxG
2½" 33'-1" GxG
2½" 33'-2" GxG
2½" 33'-3" GxG
2½" 33'-4" GxG
2½" 33'-5" GxG
2½" 33'-6" GxG
2½" 33'-7" GxG
2½" 33'-8" GxG
2½" 33'-9" GxG
2½" 33'-10" GxG
2½" 33'-11" GxG
2½" 34'-0" GxG
2½" 34'-1" GxG
2½" 34'-2" GxG
2½" 34'-3" GxG
2½" 34'-4" GxG
2½" 34'-5" GxG
2½" 34'-6" GxG
2½" 34'-7" GxG
2½" 34'-8" GxG
2½" 34'-9" GxG
2½" 34'-10" GxG
2½" 34'-11" GxG
2½" 35'-0" GxG
2½" 35'-1" GxG
2½" 35'-2" GxG
2½" 35'-3" GxG
2½" 35'-4" GxG
2½" 35'-5" GxG
2½" 35'-6" GxG
2½" 35'-7" GxG
2½" 35'-8" GxG
2½" 35'-9" GxG
2½" 35'-10" GxG
2½" 35'-11" GxG
2½" 36'-0" GxG
2½" 36'-1" GxG
2½" 36'-2" GxG
2½" 36'-3" GxG
2½" 36'-4" GxG
2½" 36'-5" GxG
2½" 36'-6" GxG
2½" 36'-7" GxG
2½" 36'-8" GxG
2½" 36'-9" GxG
2½" 36'-10" GxG
2½" 36'-11" GxG
2½" 37'-0" GxG
2½" 37'-1" GxG
2½" 37'-2" GxG
2½" 37'-3" GxG
2½" 37'-4" GxG
2½" 37'-5" GxG
2½" 37'-6" GxG
2½" 37'-7" GxG
2½" 37'-8" GxG
2½" 37'-9" GxG
2½" 37'-10" GxG
2½" 37'-11" GxG
2½" 38'-0" GxG
2½" 38'-1" GxG
2½" 38'-2" GxG
2½" 38'-3" GxG
2½" 38'-4" GxG
2½" 38'-5" GxG
2½" 38'-6" GxG
2½" 38'-7" GxG
2½" 38'-8" GxG
2½" 38'-9" GxG
2½" 38'-10" GxG
2½" 38'-11" GxG
2½" 39'-0" GxG
2½" 39'-1" GxG
2½" 39'-2" GxG
2½" 39'-3" GxG
2½" 39'-4" GxG
2½" 39'-5" GxG
2½" 39'-6" GxG
2½" 39'-7" GxG
2½" 39'-8" GxG
2½" 39'-9" GxG
2½" 39'-10" GxG
2½" 39'-11" GxG
2½" 40'-0" GxG
2½" 40'-1" GxG
2½" 40'-2" GxG
2½" 40'-3" GxG
2½" 40'-4" GxG
2½" 40'-5" GxG
2½" 40'-6" GxG
2½" 40'-7" GxG
2½" 40'-8" GxG
2½" 40'-9" GxG
2½" 40'-10" GxG
2½" 40'-11" GxG
2½" 41'-0" GxG
2½" 41'-1" GxG
2½" 41'-2" GxG
2½" 41'-3" GxG
2½" 41'-4" GxG
2½" 41'-5" GxG
2½" 41'-6" GxG
2½" 41'-7" GxG
2½" 41'-8" GxG
2½" 41'-9" GxG
2½" 41'-10" GxG
2½" 41'-11" GxG
2½" 42'-0" GxG
2½" 42'-1" GxG
2½" 42'-2" GxG
2½" 42'-3" GxG
2½" 42'-4" GxG
2½" 42'-5" GxG
2½" 42'-6" GxG
2½" 42'-7" GxG
2½" 42'-8" GxG
2½" 42'-9" GxG
2½" 42'-10" GxG
2½" 42'-11" GxG
2½" 43'-0" GxG
2½" 43'-1" GxG
2½" 43'-2" GxG
2½" 43'-3" GxG
2½" 43'-4" GxG
2½" 43'-5" GxG
2½" 43'-6" GxG
2½" 43'-7" GxG
2½" 43'-8" GxG
2½" 43'-9" GxG
2½" 43'-10" GxG
2½" 43'-11" GxG
2½" 44'-0" GxG
2½" 44'-1" GxG
2½" 44'-2" GxG
2½" 44'-3" GxG
2½" 44'-4" GxG
2½" 44'-5" GxG
2½" 44'-6" GxG
2½" 44'-7" GxG
2½" 44'-8" GxG
2½" 44'-9" GxG
2½" 44'-10" GxG
2½" 44'-11" GxG
2½" 45'-0" GxG
2½" 45'-1" GxG
2½" 45'-2" GxG
2½" 45'-3" GxG
2½" 45'-4" GxG
2½" 45'-5" GxG
2½" 45'-6" GxG
2½" 45'-7" GxG
2½" 45'-8" GxG
2½" 45'-9" GxG
2½" 45'-10" GxG
2½" 45'-11" GxG
2½" 46'-0" GxG
2½" 46'-1" GxG
2½" 46'-2" GxG
2½" 46'-3" GxG
2½" 46'-4" GxG
2½" 46'-5" GxG
2½" 46'-6" GxG
2½" 46'-7" GxG
2½" 46'-8" GxG
2½" 46'-9" GxG
2½" 46'-10" GxG
2½" 46'-11" GxG
2½" 47'-0" GxG
2½" 47'-1" GxG
2½" 47'-2" GxG
2½" 47'-3" GxG
2½" 47'-4" GxG
2½" 47'-5" GxG
2½" 47'-6" GxG
2½" 47'-7" GxG
2½" 47'-8" GxG
2½" 47'-9" GxG
2½" 47'-10" GxG
2½" 47'-11" GxG
2½" 48'-0" GxG
2½" 48'-1" GxG
2½" 48'-2" GxG
2½" 48'-3" GxG
2½" 48'-4" GxG
2½" 48'-5" GxG
2½" 48'-6" GxG
2½" 48'-7" GxG
2½" 48'-8" GxG
2½" 48'-9" GxG
2½" 48'-10" GxG
2½" 48'-11" GxG
2½" 49'-0" GxG
2½" 49'-1" GxG
2½" 49'-2" GxG
2½" 49'-3" GxG
2½" 49'-4" GxG
2½" 49'-5" GxG
2½" 49'-6" GxG
2½" 49'-7" GxG
2½" 49'-8" GxG
2½" 49'-9" GxG
2½" 49'-10" GxG
2½" 49'-11" GxG
2½" 50'-0" GxG
2½" 50'-1" GxG
2½" 50'-2" GxG
2½" 50'-3" GxG
2½" 50'-4" GxG
2½" 50'-5" GxG
2½" 50'-6" GxG
2½" 50'-7" GxG
2½" 50'-8" GxG
2½" 50'-9" GxG
2½" 50'-10" GxG
2½" 50'-11" GxG
2½" 51'-0" GxG
2½" 51'-1" GxG
2½" 51'-2" GxG
2½" 51'-3" GxG
2½" 51'-4" GxG
2½" 51'-5" GxG
2½" 51'-6" GxG
2½" 51'-7" GxG
2½" 51'-8" GxG
2½" 51'-9" GxG
2½" 51'-10" GxG
2½" 51'-11" GxG
2½" 52'-0" GxG
2½" 52'-1" GxG
2½" 52'-2" GxG
2½" 52'-3" GxG
2½" 52'-4" GxG
2½" 52'-5" GxG
2½" 52'-6" GxG
2½" 52'-7" GxG
2½" 52'-8" GxG
2½" 52'-9" GxG
2½" 52'-10" GxG
2½" 52'-11" GxG
2½" 53'-0" GxG
2½" 53'-1" GxG
2½" 53'-2" GxG
2½" 53'-3" GxG
2½" 53'-4" GxG
2½" 53'-5" GxG
2½" 53'-6" GxG
2½" 53'-7" GxG
2½" 53'-8" GxG
2½" 53'-9" GxG
2½" 53'-10" GxG
2½" 53'-11" GxG
2½" 54'-0" GxG
2½" 54'-1" GxG
2½" 54'-2" GxG
2½" 54'-3" GxG
2½" 54'-4" GxG
2½" 54'-5" GxG
2½" 54'-6" GxG
2½" 54'-7" GxG
2½" 54'-8" GxG
2½" 54'-9" GxG
2½" 54'-10" GxG
2½" 54'-11" GxG
2½" 55'-0" GxG
2½" 55'-1" GxG
2½" 55'-2" GxG
2½" 55'-3" GxG
2½" 55'-4" GxG
2½" 55'-5" GxG
2½" 55'-6" GxG
2½" 55'-7" GxG
2½" 55'-8" GxG
2½" 55'-9" GxG
2½" 55'-10" GxG
2½" 55'-11" GxG
2½" 56'-0" GxG
2½" 56'-1" GxG
2½" 56'-2" GxG
2½" 56'-3" GxG
2½" 56'-4" GxG
2½" 56'-5" GxG
2½" 56'-6" GxG
2½" 56'-7" GxG
2½" 56'-8" GxG
2½" 56'-9" GxG
2½" 56'-10" GxG
2½" 56'-11" GxG
2½" 57'-0" GxG
2½" 57'-1" GxG
2½" 57'-2" GxG
2½" 57'-3" GxG
2½" 57'-4" GxG
2½" 57'-5" GxG
2½" 57'-6" GxG
2½" 57'-7" GxG
2½" 57'-8" GxG
2½" 57'-9" GxG
2½" 57'-10" GxG
2½" 57'-11" GxG
2½" 58'-0" GxG
2½" 58'-1" GxG
2½" 58'-2" GxG
2½" 58'-3" GxG
2½" 58'-4" GxG
2½" 58'-5" GxG
2½" 58'-6" GxG
2½" 58'-7" GxG
2½" 58'-8" GxG
2½" 58'-9" GxG
2½" 58'-10" GxG
2½" 58'-11" GxG
2½" 59'-0" GxG
2½" 59'-1" GxG
2½" 59'-2" GxG
2½" 59'-3" GxG
2½" 59'-4" GxG
2½" 59'-5" GxG
2½" 59'-6" GxG
2½" 59'-7" GxG
2½" 59'-8" GxG
2½" 59'-9" GxG
2½" 59'-10" GxG
2½" 59'-11" GxG
2½" 60'-0" GxG
2½" 60'-1" GxG
2½" 60'-2" GxG
2½" 60'-3" GxG
2½" 60'-4" GxG
2½" 60'-5" GxG
2½" 60'-6" GxG
2½" 60'-7" GxG
2½" 60'-8" GxG
2½" 60'-9" GxG
2½" 60'-10" GxG
2½" 60'-11" GxG
2½" 61'-0" GxG
2½" 61'-1" GxG
2½" 61'-2" GxG
2½" 61'-3" GxG
2½" 61'-4" GxG
2½" 61'-5" GxG
2½" 61'-6" GxG
2½" 61'-7" GxG
2½" 61'-8" GxG
2½" 61'-9" GxG
2½" 61'-10" GxG
2½" 61'-11" GxG
2½" 62'-0" GxG
2½" 62'-1" GxG
2½" 62'-2" GxG
2½" 62'-3" GxG
2½" 62'-4" GxG
2½" 62'-5" GxG
2½" 62'-6" GxG
2½" 62'-7" GxG
2½" 62'-8" GxG
2½" 62'-9" GxG
2½" 62'-10" GxG
2½" 62'-11" GxG
2½" 63'-0" GxG
2½" 63'-1" GxG
2½" 63'-2" GxG
2½" 63'-3" GxG
2½" 63'-4" GxG
2½" 63'-5" GxG
2½" 63'-6" GxG
2½" 63'-7" GxG
2½" 63'-8" GxG
2½" 63'-9" GxG
2½" 63'-10" GxG
2½" 63'-11" GxG
2½" 64'-0" GxG
2½" 64'-1" GxG
2½" 64'-2" GxG
2½" 64'-3" GxG
2½" 64'-4" GxG
2½" 64'-5" GxG
2½" 64'-6" GxG
2½" 64'-7" GxG
2½" 64'-8" GxG
2½" 64'-9" GxG
2½" 64'-10" GxG
2½" 64'-11" GxG
2½" 65'-0" GxG
2½" 65'-1" GxG
2½" 65'-2" GxG
2½" 65'-3" GxG
2½" 65'-4" GxG
2½" 65'-5" GxG
2½" 65'-6" GxG
2½" 65'-7" GxG
2½" 65'-8" GxG
2½" 65'-9" GxG
2½" 65'-10" GxG
2½" 65'-11" GxG
2½" 66'-0" GxG
2½" 66'-1" GxG
2½" 66'-2" GxG
2½" 66'-3" GxG
2½" 66'-4" GxG
2½" 66'-5" GxG
2½" 66'-6" GxG
2½" 66'-7" GxG
2½" 66'-8" GxG
2½" 66'-9" GxG
2½" 66'-10" GxG
2½" 66'-11" GxG
2½" 67'-0" GxG
2½" 67'-1" GxG
2½" 67'-2" GxG
2½" 67'-3" GxG
2½" 67'-4" GxG
2½" 67'-5" GxG
2½" 67'-6" GxG
2½" 67'-7" GxG
2½" 67'-8" GxG
2½" 67'-9" GxG
2½" 67'-10" GxG
2½" 67'-11" GxG
2½" 68'-0" GxG
2½" 68'-1" GxG
2½" 68'-2" GxG
2½" 68'-3" GxG
2½" 68'-4" GxG
2½" 68'-5" GxG
2½" 68'-6" GxG
2½" 68'-7" GxG
2½" 68'-8" GxG
2½" 68'-9" GxG
2½" 68'-10" GxG
2½" 68'-11" GxG
2½" 69'-0" GxG
2½" 69'-1" GxG
2½" 69'-2" GxG
2½" 69'-3" GxG
2½" 69'-4" GxG
2½" 69'-5" GxG
2½" 69'-6" GxG
2½" 69'-7" GxG
2½" 69'-8" GxG
2½" 69'-9" GxG
2½" 69'-10" GxG
2½" 69'-11" GxG
2½" 70'-0" GxG
2½" 70'-1" GxG
2½" 70'-2" GxG
2½" 70'-3" GxG
2½" 70'-4" GxG
2½" 70'-5" GxG
2½" 70'-6" GxG
2½" 70'-7" GxG
2½" 70'-8" GxG
2½" 70'-9" GxG
2½" 70'-10" GxG
2½" 70'-11" GxG
2½" 71'-0" GxG
2½" 71'-1" GxG
2½" 71'-2" GxG
2½" 71'-3" GxG
2½" 71'-4" GxG
2½" 71'-5" GxG
2½" 71'-6" GxG
2½" 71'-7" GxG
2½" 71'-8" GxG
2½" 71'-9" GxG
2½" 71'-10" GxG
2½" 71'-11" GxG
2½" 72'-0" GxG
2½" 72'-1" GxG
2½" 72'-2" GxG
2½" 72'-3" GxG
2½" 72'-4" GxG
2½" 72'-5" GxG
2½" 72'-6" GxG
2½" 72'-7" GxG
2½" 72'-8" GxG
2½" 72'-9" GxG
2½" 72'-10" GxG
2½" 72'-11" GxG
2½" 73'-0" GxG
2½" 73'-1" GxG
2½" 73'-2" GxG
2½" 73'-3" GxG
2½" 73'-4" GxG
2½" 73'-5" GxG
2½" 73'-6" GxG
2½" 73'-7" GxG
2½" 73'-8" GxG
2½" 73'-9" GxG
2½" 73'-10" GxG
2½" 73'-11" GxG
2½" 74'-0" GxG
2½" 74'-1" GxG
2½" 74'-2" GxG
2½" 74'-3" GxG
2½" 74'-4" GxG
2½" 74'-5" GxG
2½" 74'-6" GxG
2½" 74'-7" GxG
2½" 74'-8" GxG
2½" 74'-9" GxG
2½" 74'-10" GxG
2½" 74'-11" GxG
2½" 75'-0" GxG
2½" 75'-1" GxG
2½" 75'-2" GxG
2½" 75'-3" GxG
2½" 75'-4" GxG
2½" 75'-5" GxG
2½" 75'-6" GxG
2½" 75'-7" GxG
2½" 75'-8" GxG
2½" 75'-9" GxG
2½" 75'-10" GxG
2½" 75'-11" GxG
2½" 76'-0" GxG
2½" 76'-1" GxG
2½" 76'-2" GxG
2½" 76'-3" GxG
2½" 76'-4" GxG
2½" 76'-5" GxG
2½" 76'-6" GxG
2½" 76'-7" GxG
2½" 76'-8" GxG
2½" 76'-9" GxG
2½" 76'-10" GxG
2½" 76'-11" GxG
2½" 77'-0" GxG
2½" 77'-1" GxG
2½" 77'-2" GxG
2½" 77'-3" GxG
2½" 77'-4" GxG
2½" 77'-5" GxG
2½" 77'-6" GxG
2½" 77'-7" GxG
2½" 77'-8" GxG
2½" 77'-9" GxG
2½" 77'-10" GxG
2½" 77'-11" GxG
2½" 78'-0" GxG
2½" 78'-1" GxG
2½" 78'-2" GxG
2½" 78'-3" GxG
2½" 78'-4" GxG
2½" 78'-5" GxG
2½" 78'-6" G

T.I. PIPING PLAN
NORTH EAST QUADRANT

scale 1/8" = 1'-0"

RIGID GROOVED COUPLING
FLEXIBLE GROOVED COUPLING

△1 6-17-03 ONTARIO FIRE PREV. PLAN CHECK CORRECTIONS

△2 7-14-03 ONTARIO FIRE PREV. PLAN CHECK CORRECTIONS

SPRINKLER HEAD KEY

	COUNT	TYPE	MFG	MODEL	TEMP	K	FINISH	NPT	ORF	ESC
◉	6	EXT.COV. CONCEALED	TYCO	ELOC	160°	11.2	WHITE	3/4"		FLUSH
●	17	STANDARD CONCEALED	TYCO	ROYAL FLUSH II	155°	5.6	WHITE	½"	½"	FLUSH
⊘		EXIST SSU ON STUP UP								
○		EXIST SSU								

SPRINKLER HEAD KEY

	COUNT	TYPE	MFG	MODEL	TEMP	K	FINISH	NPT	ORF	ESC
◉	103	EXT.COV. PENDENT	TYCO	EC-14	135°	5.6	CHROME	3/4"		RECESSED 30
◎	32	PENDENT	TYCO	BV-QR	155°	5.6	CHROME	½"	½"	RECESSED
⊘	109	UPRIGHT	TYCO	BV-QR	155°	5.6	BRASS	½"	½"	STUB UP
	267	TOTAL HEADS (THIS SHEET)								

LICENSED FIRE PROTECTION CONTRACTOR — CLASSIFICATION C-16 LICENSE NO. 350225 — STATE OF CALIFORNIA

Golden State Fire Protection Inc.
15535 ARROW ROUTE FONTANA, CA 92335 800-955-1707
P.O. BOX 3697 FONTANA, CA 92334
Automatic Sprinklers & Fire Protection Systems

SCALE	1/8" = 1'-0
DATE	7-17-03
DRAWN BY	BW
JOB NO.	03-1579
SHEET	2 of 5
PROJECT	ONTARIO PD HEADQUARTERS
ADDRESS	2534 S. ARCHIBALD AVE. ONTARIO



HYDRAULIC DESIGN INFORMATION

AREA NUMBER 1	CODE NFPA 13	HAZARD LIGHT		SYSTEM TYPE WET	
REMOTE AREA SQ. FT. 1500	DENSITY GPM/SQ. FT. 0.1	INSIDE HOSE ALLOWANCE 0	OUTSIDE HOSE ALLOWANCE 100	AREA PER SPRINKLER 400	
TOTAL SYSTEM REQUIREMENTS:	41 GPM @	254 GPM @	Base of Riser		

T.I. PIPING PLAN
NORTHWEST QUADRANT

scale 1/8" = 1'-0"

RIGID GROOVED COUPLING
FLEXIBLE GROOVED COUPLING

1 6-17-03 ONTARIO FIRE PREV. PLAN CHECK CORRECTIONS

2 7-14-03 ONTARIO FIRE PREV. PLAN CHECK CORRECTIONS

SPRINKLER HEAD KEY

	COUNT	TYPE	MFG	MODEL	TEMP	K	FINISH	NPT	ORF	ESC
●	3	EXT.COV. CONCEALED	TYCO	ELOC	160°	11.2	WHITE	3/4"		FLUSH
●	43	STANDARD CONCEALED	TYCO	ROYAL FLUSH II	155°	5.6	WHITE	½"	½"	FLUSH
⊘		EXIST SSU ON STUP UP								
◎	5	PENDENT	TYCO	BV-QR	200°	5.6	WHITE POLYESTER	½"	½"	RECESSED

SPRINKLER HEAD KEY

	COUNT	TYPE	MFG	MODEL	TEMP	K	FINISH	NPT	ORF	ESC
◉	63	EXT.COV. PENDENT	TYCO	EC-14	135°	5.6	CHROME	3/4"		RECESSED 30
◎	22	PENDENT	TYCO	BV-QR	155°	5.6	CHROME	½"	½"	RECESSED
⊘	98	UPRIGHT	TYCO	BV-QR	155°	5.6	BRASS	½"	½"	STUB UP
	229	TOTAL HEADS (THIS SHEET)								

LICENSED FIRE PROTECTION CONTRACTOR — STATE OF CALIFORNIA — CLASSIFICATION C-16 LICENSE NO. 350225

Golden State Fire Protection Inc.
15535 ARROW ROUTE FONTANA, CA 92335 800-955-1707
P.O. BOX 3697 FONTANA, CA 92334
Automatic Sprinklers & Fire Protection Systems

PROJECT	ONTARIO PD HEADQUARTERS
ADDRESS	2534 S. ARCHIBALD AVE. ONTARIO
SCALE	1/8" = 1'-0
DATE	7-17-03
DRAWN BY	BW
JOB NO.	03-1579
SHEET	3 of 5


MATCH LINE
MATCH LINE
MATCH LINE
MATCH LINE
366'-0"
24'-0"
24'-0"
24'-0"
1'-0"
24'-0"
20'-0"
19'-0"
21'-0"
1'-0"
6'-0"
H
J
K
L
M
N
P
P3
P6
Q
R
1'-0"
10'-0"
1'-1"
20'-0"
24'-0"
24'-0"
24'-0"
24'-0"
24'-0"
24'-0"
24'-0"
24'-0"
24'-0"
1
2
2A
3
4
5
6
7
8
9
10
11
P4
P7
COPS & GANGS OPEN OFFICE 1508
PLANNING/ BRIEFING 1515
ONE-HOUR RATED CORRIDOR 1501
ISSUE ROOM 1609
P.T.O. MEETING ROOM 1608
WOMEN'S STAFF TLTS. 1605
PARTO CONF. ROOM 1607
ONE-HOUR RATED VESTIBULE 1804
BRIEFING STORAGE 1804
MEN'S STAFF TLTS. 1606
JAN. ROOM 1603
COPS SGT. 1506
COPS SGT. 1505
COPS LT. 1504
DAB & CAL ARSON TECH OFFICE 1503
OPEN OFFICE 1407
OPEN OFFICE 1406
ONE-HOUR RATED CORRIDOR 1601
DRIVE PREV. STOR. 1812
IN POLYGRAPH 1815
JOINT / POLYGRAPH 1816
SM. EVID. VIEWING 1818
VES. 1818
FI. PRINT / MAIL 1817
MAIL STAFF / COUNTER 1848
COPY CENTER 819
OPTICAL TECH. ROOM 1821
COURTYARD 1702
SERVICES CAPTAIN 1704
UNIFORM SEC. / SERVCS. SEC.
INVEST. CAPTAIN 1713
OPEN OFFICE 1708
INVEST. SEC. / ADMIN. SEC.
EXEC. CONF. ROOM 1712
LA INTERVIEW 1711
INTELL. SEC. (2) 1709
LA SGT. 2307
ONE-HOUR RATED CORRIDOR 1701
EXPANSION SUPPLIES/FILES 1405
REC. & PERS. SRGT. 1404
TRAINING SGT. 1304
TRAINING CORP. 1306
TRAINING OPEN OFFICE 1305
TRAINING OPEN OFFICE 1307
STOR. 1309
STOR. 1311
MEDIA/VIDEO PROD. ROOM 1313
TRAINING STOR./MAT. 1312
ONE-HOUR RATED CORRIDOR 1203
COMPUTER TRAINING ROOM 1204
SERVER ROOM 1207
STORAGE ROOM 1208
OFFICE
MULTI-PURPOSE COMMUNITY ROOM #2 1203
MULTI-PURPOSE COMMUNITY ROOM #1 1202
RECORDS COUNTER 1807
RECORDS COUNTER 1806
FRONT COUNTER 1805
PUBLIC LOBBY 1801
WOMEN'S PUBLIC RESTROOMS 1104
MEN'S PUBLIC RESTROOM 1102
JAN. ROOM 1103
COMMUNICATIONS EQUIPMENT ROOM 1101
212° SSU
SSU ON 1½" x ½" THD. MECH. TEE TYP.
STAIR 01
PUBLIC CORRIDOR 1105
PUBLIC LOBBY 1100
INT. ROOM 1109
SOFT INT. ROOM 1110
INT. ROOM 1111
ONE-HOUR RATED CORRIDOR 1902
INT. ROOM 1913
INT. ROOM 1912
INT. ROOM 1906
ELEC. ROOM 1911
MECH. ROOM 1909
STORAGE 1908
STORAGE 1902
GALLERY STORAGE 1114
EXIST SSU
ELEV. 01
STAIR 02
ONE-HOUR RATED LOBBY 1901
12'-0" PLANNED FUTURE CEILING HEIGHT
GALLERY 1113
OPEN TO STRUCTURE ABOVE
EXHIBIT 1113
OPEN OFFICE 1822
OPEN OFFICE 1823
OPEN OFFICE 1824
OPEN OFFICE 1825
OPEN OFFICE 1826
OPEN OFFICE 1827
OPEN OFFICE 1907
HALL 1802
FORMS 1804
TELEPHONE SWITCHBOARD OPERATOR 1803
ONE-HOUR CORRIDOR 1902
RECORDS SUPER. 1824
RECORDS LINGR. 1825
OFFICE 2114
#4
A-1 2"x21'-0" 5x5 DYNAFLO
A-7 2"x21'-0" 5x5 DYNAFLO
A-8 2"x 20'-0" 5x5 DYNAFLO
1½" EXIST.
1¼" EXIST.
1½" x 1" STRAP
1½" x 1¼" THD. MECH. TEE
3" x 2" THD. MECH. TEE
3" x 1¼" THD. MECH. TEE
3" x 1¼" THD. MECH. TEE
3" x 1¼" THD. MECH. TEE
3" EXIST.
4" EXIST.
5" EXIST.
6" EXIST.
5" EXIST.
4" EXIST.
4" EXIST.
4" EXIST.
3" EXIST.
3" EXIST.
3

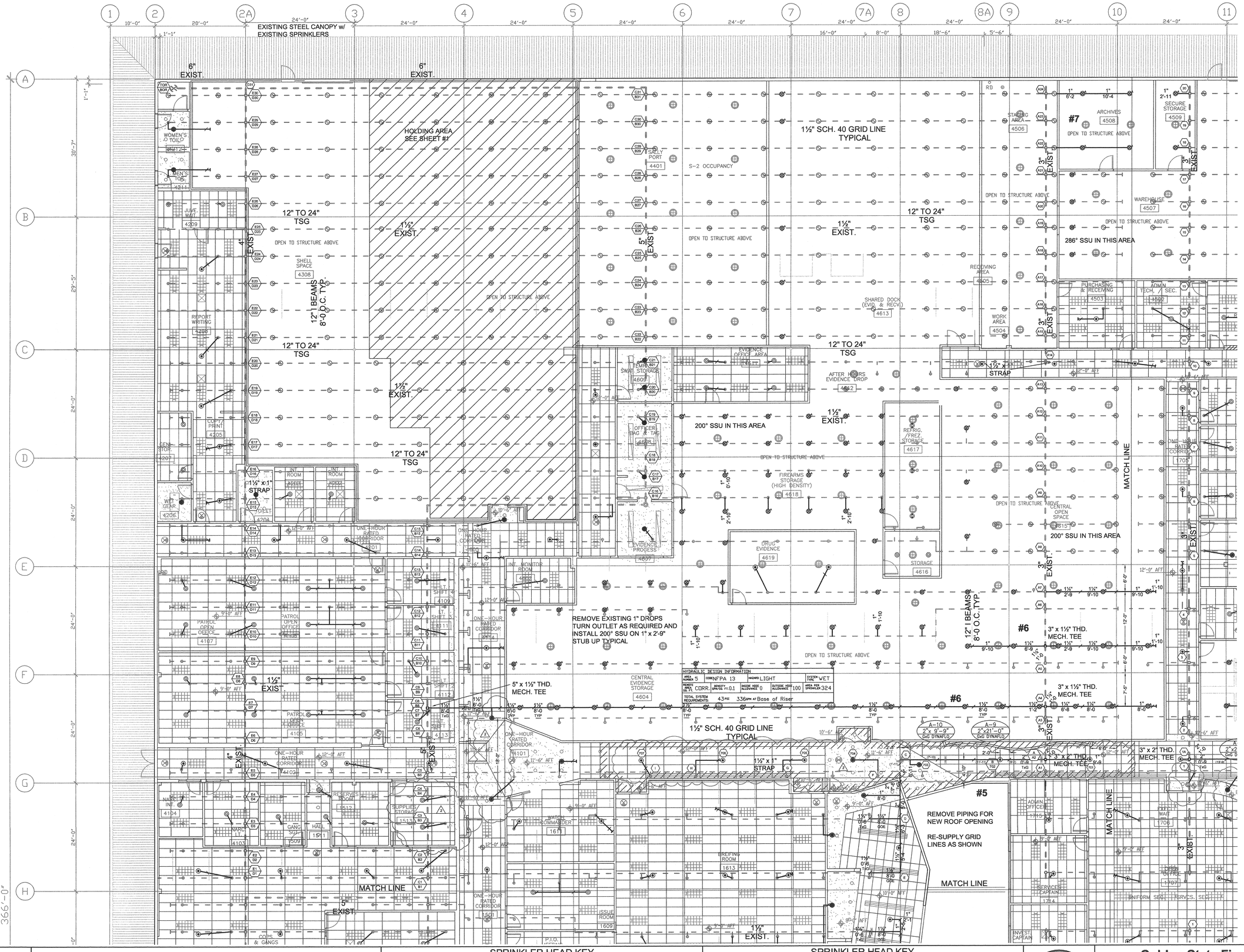
EXISTING STEEL CANOPY w/ EXISTING SPRINKLERS
6" EXIST.
HOLDING AREA SEE SHEET #1
1½" SCH. 40 GRID LINE TYPICAL
WOMEN'S TOILET 4211
MEN'S TOILET 4210
JUVE. WAIT 4209
SALLY PORT 4401
S-2 OCCUPANCY
SHELL SPACE 4308
REPORT WRITING 4206
COPY / PRINT 4205
CEN. STOR. 4207
WET GEAR 4206
INT. ROOM 4202
INT. ROOM 4203
ONE-HOUR RATED CORRIDOR 4201
PATROL OPEN OFFICE 4107
PATROL OPEN OFFICE 4105
PATROL OPEN OFFICE 4111
PATROL OPEN OFFICE 4112
ONE-HOUR RATED CORRIDOR 4402
NARC. INT. 4104
NARC. LT. 4103
GANG SGT. 1509
HALL 1511
RESERVES ROOM 1512
SUPPLIES STORAGE 1513
COPS & GANGS 1510
ONE-HOUR RATED CORRIDOR 1501
ISSUE ROOM 1609
P.T.O. 1610
WATCH COMMANDER 1611
BRIEFING ROOM 1613
ONE-HOUR RATED CORRIDOR 4601
INT. MONITOR ROOM 4602
LT. SHIFT 4109
LT. SHIFT 4110
LT. SHIFT 4112
LT. SHIFT 4113
ONE-HOUR RATED CORRIDOR 4603
TEMP. EVID. STORAGE 4605
EVIDENCE OFFICE AREA 4611
AFTER HOURS EVIDENCE DROP 4612
SHARED DOCK (EVID. & RECV.) 4613
EVIDENCE PROCESS 4607
OFFICER BAG & TAG 4608
CENTRAL EVIDENCE STORAGE 4604
DRUG EVIDENCE 4619
FIREARMS STORAGE (HIGH DENSITY) 4618
STORAGE 4616
REFRIG. /FREZ. STORAGE 4617
200° SSU IN THIS AREA
REMOVE EXISTING 1" DROPS TURN OUTLET AS REQUIRED AND INSTALL 200° SSU ON 1" x 2'-9" STUB UP TYPICAL
HYDRAULIC DESIGN INFORMATION
AREA NUMBER 5 CODE NFPA 13 HAZARD LIGHT SYSTEM TYPE WET
REMOTE AREA SQ. FT. CDRR. DENSITY GPM/SQ. FT. 0.1 DESIGN HOSE ALLOWANCE 0 OUTSIDE HOSE ALLOWANCE 100 AREA PER SPRINKLER 324
TOTAL SYSTEM REQUIREMENTS: 43 FIRE 336 GPM AT Base of Riser
RD
STAGING AREA 4506
ARCHIVES 4508
SECURE STORAGE 4509
WAREHOUSE 4507
RECEIVING 4505
PURCHASING & RECEIVING 4503
ADMIN TECH. / SEC. 4502
WORK AREA 4504
SHARED DOCK (EVID. & RECV.) 4613
OPEN TO STRUCTURE ABOVE
286° SSU IN THIS AREA
12" TO 24" TSG
12" I BEAMS 8'-0 O.C. TYP.
1½" EXIST.
5" EXIST.
4" EXIST.
3" EXIST.
1½" x 1" STRAP
1½" x 1½" STRAP
5" x 1½" THD. MECH. TEE
3" x 1½" THD. MECH. TEE
3" x 2" THD. MECH. TEE
3" x 2" THD. MECH. TEE
#5
REMOVE PIPING FOR NEW ROOF OPENING
RE-SUPPLY GRID LINES AS SHOWN
#6
#7
MATCH LINE
ADMIN OFFICES 1715
EXECS. WAIT 1706
OPEN OFFICE 1707
SERGEANTS CAPTAINS 1714
INVEST. CAPTAIN 1713
UNIFORM SERGS. SERGS.
ONE-HOUR RATED CORRIDOR 1705
A-10 2" X 2'-9" GxG DYNAFLO
A-9 2" X 2'-10" GxG DYNAFLO
A-8 2" X 2'-11" GxG DYNAFLO
A-7 2" X 2'-11" GxG DYNAFLO
A-6 2" X 2'-11" GxG DYNAFLO
A-5 2" X 2'-11" GxG DYNAFLO
A-4 2" X 2'-11" GxG DYNAFLO
A-3 2" X 2'-11" GxG DYNAFLO
A-2 2" X 2'-11" GxG DYNAFLO
A-1 2" X 2'-11" GxG DYNAFLO
1" 8'-2
1" 10'-4
1" 2'-11
1" 2'-10
1" 1'-10
1" 9'-10
1" 8'-9
1" 6'-8
1" 2'-9
1" 0'-6
1" 0'-10
1½" 8'-0 TYP
1½" 6'-8 TYP
1½" 6'-9 TYP
1½" 2'-9
1½" 9'-10
1½" 6'-9
1½" 0'-6
1½" 0'-10
1½" 1'-10

ONTARIO PD: TEMPORARY HOLDING AREA
RECORD DOCUMENTS
06.11.2004

SYMBOLS

- DETAIL: (12 / A11.1) DETAIL NUMBER; SHEET WHERE DRAWN
- INTERIOR ELEVATION: (1 / A5.1) ELEVATION NUMBER; SHEET WHERE DRAWN
- WALL SECTION: (D5 / A12.3) SECTION NUMBER; SHEET WHERE DRAWN
- BUILDING SECTION: (D6 / A12.1) SECTION NUMBER; SHEET WHERE DRAWN
- TRUE NORTH / PLAN NORTH
- (1) (A) GRID OR COLUMN LINE
- ELEVATION
- (X) REVISION
- W.P. WORK POINT
- XXX ROOM NUMBER
- XX WALL TYPE
- (XX) DOOR NUMBER
- - KEYNOTE

ABBREVIATIONS

A.B.	ANCHOR BOLT
A.B.C.	AGGREGATE BASE COURSE
A.C.	ASPHALTIC CONCRETE/ AIR CONDITIONING
ACOUST.	ACOUSTICAL
A.D.	ACCESS DOOR/AREA DRAIN AREA DRAIN
ADD	ADDENDUM OR ADDITION
ADJ	ADJUSTABLE
A.F.F.	ABOVE FINISH FLOOR
A.E.F.F.	ABOVE EXISTING FINISH FLOOR
ALUM	ALUMINUM
ALT	ALTERNATE
&	AND
∠	ANGLE
ANOD	ANODIZED
ARCH	ARCHITECT(URAL)
ASPH	ASPHALT
@	AT
BD	BOARD
BTWN	BETWEEN
B.F.	BOTTOM OF FOOTING
BLDG	BUILDING
BLKG	BLOCKING
BM	BEAM
B.N.	BOUNDARY NAIL
B.O.	BOTTOM OF
BOT	BOTTOM
BRG	BEARING
BSMT	BASEMENT
B.U.	BUILT-UP
C (or [ )	CHANNEL
CER	CERAMIC
CB	CATCH BASIN
CG	CORNER GUARD
C.I.P.	CAST-IN-PLACE
C.J.	CONTROL JOINT
CL	CENTERLINE
CLG	CEILING
CLR	CLEAR(ANCE)
CMU	CONCRETE MASONRY UNIT
CLOS.	CLOSET
C.O.	CLEAN OUT
COL	COLUMN
CONC	CONCRETE
CONSTR	CONSTRUCTION
CONT	CONTINUOUS
COORD	COORDINATE
CORR	CORRIDOR
CSK	COUNTERSINK
CTR	CENTER
CR	CARD READER
d	PENNEY (NAILS)
DP	DAMPPROOFING
D.F.	DRINKING FOUNTAIN/ DOUGLAS FIR
DBL	DOUBLE
DIA ( )	DIAMETER
DIAG	DIAGONAL
DIAPH	DIAPHRAGM
DIM	DIMENSION
D.L.	DEAD LOAD
DN.	DOWN
D.S.	DOWNSPOUT
DTL	DETAIL
DWG	DRAWING
DWLS	DOWELS
DWR	DRAWER
E	EAST
EA	EACH
E.B.	EXPANSION BOLT
E.D.F.	ELEC. DRINKING FOUNTAIN
E.J.	EXPANSION JOINT
EL	ELEVATOR
ELEC	ELECTRIC(AL)
ELEV	ELEVATION
E.N.	EDGE NAIL
ENC	ENCLOSURE
EQ	EQUAL
EQUIP	EQUIPMENT
E.W.	EACH WAY
EWC	ELECTRIC WATER COOLER
EXT	EXTERIOR
EXST	EXISTING
(E)	EXISTING
F.B.	FLAT BAR
F.D.	FLOOR DRAIN
FDN	FOUNDATION
F.E.	FIRE EXTINGUISHER
F.E.C.	FIRE EXTINGUISHER CABINET
F.F.	FINISH FLOOR / FACTORY FINISH
F.F.E	FINISHED FLOOR ELEVATION
F.P.E	FINISHED PAVING ELEVATION
F.G.	FINISHED GRADE
F.H.C.	FIRE HOSE CABINET
FIN	FINISH
FLR	FLOOR
FLUOR	FLUORESCENT
F.N.	FIELD NAILING
F.O.	FACE OF (SPECIFY ITEM)
F.O.B.	FACE OF BRICK
F.O.C.	FACE OF CONCRETE
F.O.F.	FACE OF FINISH
F.O.M.	FACE OF MASONRY
F.O.P.	FACE OF PANEL
F.O.S.	FACE OF STUD
FS.	FINISH SURFACE
FT	FOOT/FEET
FTG	FOOTING
F.S.	FLOOR SINK
GA	GAUGE
GALV	GALVANIZED
G.I.	GALVANIZED IRON
GL	GLASS
GLB	GLU LAM BEAM
GYP. BD.	GYPSUM BOARD
H.B.	HOSE BIBB
H.C.	HOLLOW CORE
HDR	HEADER
HDWR	HARDWARE
HGR	HANGER
H.M.	HOLLOW METAL
HORIZ	HORIZONTAL
HR	HOUR
HT	HEIGHT
HVAC	HEATING, VENTILATING AND AIR CONDITIONING
H.W.	HOT WATER
I.D.	INSIDE DIAMETER
IN	INCH
INCL	INCLUDED
I.E.	INVERT ELEVATION
INSUL	INSULATION
INT	INTERIOR
JAN	JANITOR
JST	JOIST
JT	JOINT
KIT	KITCHEN
KJ	KEYED JOINT
KO	KNOCKOUT
LAM	LAMINATED
LAV	LAVATORY
L.G.	LAG BOLT
L.L.	LIVE LOAD
LLH	LONG LEG HORIZONTAL
LLV	LONG LEG VERTICAL
LONGIT	LONGITUDINAL
L.P.	LOW POINT
L.W.C.	LIGHT WEIGHT CONCRETE
MAS	MASONRY
M.O.	MASONRY OPENING
MAT'L	MATERIAL
MAX	MAXIMUM
MECH	MECHANICAL
MEMB	MEMBRANE
MET	METAL
MFR	MANUFACTURER
MIN	MINIMUM
MISC	MISCELLANEOUS
	NORTH
N.A.	NOT APPLICABLE
N.I.C.	NOT IN CONTRACT
N.T.S.	NOT TO SCALE
NO	NUMBER
O.C.	ON CENTER
O.D.	OUTSIDE DIAMETER
O.F.	OVERFLOW/OUTSIDE FACE
O.F.C.I.	OWNER FURNISHED/ CONTRACTOR INSTALLED
O.F.O.I.	OWNER FURNISHED/ OWNER INSTALLED
O.H.	OPPOSITE HAND/OVERHEAD
OPN'G.	OPENING
OPP	OPPOSITE
P	PROPERTY LINE/PLATE
PERIM	PERIMETER
PERP( )	PERPENDICULAR
PLAM	PLASTIC LAMINATE
PLAS	PLASTER
PLAST	PLASTIC
P.D.	PLANTER DRAIN
PLWD	PLYWOOD
P.S.F.	POUNDS PER SQUARE FOOT
P.S.I.	POUNDS PER SQUARE INCH
P.T.	PRESSURE TREATED
P.T.S.	POST TENSIONING SLAB
PVC	POLYVINYL CHLORIDE
R	RISE
R.C.P.	REFLECTED CEILING PLAN
R.D.	ROOF DRAIN
REF	REFER(ENCE)
REINF	REINFORCING
REQ(D)	REQUIRED
REQMTS	REQUIREMENTS
RESIL	RESILIENT
RET	RETAIN(ING)
RM	ROOM
S	SOUTH
S.C.	SOLID CORE
SCHED	SCHEDULE
S.F.	SQUARE FEET
SHT	SHEET
SIM	SIMILAR
S.M.F.E.	SURFACE MOUNTED FIRE EXTINGUISHER
SPEC	SPECIFICATION
SQ	SQUARE
S.S.	STAINLESS STEEL
STAGG	STAGGERED
STD	STANDARD
STIFF	STIFFENED
STR	STRUCTURAL
STL	STEEL
SYM	SYMMETRICAL
T	TREAD
T.C.	TOP OF CURB/ TOP OF CONCRETE
T&G	TONGUE AND GROOVE
THR	THRESHOLD
T.I.	TENANT IMPROVEMENT
T.J.	TOOLED JOINT
T.N.	TOE NAILED
T.O.	TOP OF (SPECIFY ITEM)
T.O.C.	TOP OF CURB
T.O.P.	TOP OF PARAPET
T.O.S.	TOP OF SLAB
T.O.W.	TOP OF WALL
TRANS	TRANSVERSE
TYP	TYPICAL
U.B.C.	UNIFORM BUILDING CODE
U.N.O.	UNLESS NOTED OTHERWISE
UL	UNDERWRITERS LABORATORY
V.C.T.	VINYL COMPOSITION TILE
VENT	VENTILATOR/VENTILATION
VERT	VERTICAL
V.R.	VAPOR RETARDER
VTR	VENT THRU ROOF
VWC	VINYL WALL COVERING
W	WEST
WDW	WINDOW
W/	WITH
W.GL.	WIRE GLASS
W.H.	WATER HEATER
W/O	WITHOUT
WP	WATERPROOF
W.P.J.	WEAKENED PLANE JOINT
W.R.	WATER RESISTANT
WT	WEIGHT
W.W.F.	WELDED WIRE FABRIC
W.W.M.	WELDED WIRE MESH

PROJECT DATA

PROJECT DESCRIPTION :

TEMPORARY HOLDING FACILITY TENNANT IMPROVEMENT WITHIN AN EXISTING 2 STORY BUILDING.

THE TEMPORARY HOLDING FACILITY IS DESIGNED FOR A MAXIMUM STAY OF LESS THAN 12 HOURS BEFORE ARRESSTEES ARE MOVED TO COUNTY FACILITIES OR RELEASED.

ADDRESS :

2534 SOUTH ARCHIBALD
ONTARIO, CALIFORNIA

AREA ANALYSIS :

EXISTING BUILDING	165,835 SF
AREA OF TENNANT IMPROVEMENT (TEMPORARY HOLDING AREA)	3,875 SF

ALLOWABLE AREA FOR THE OVERALL BUILDING IS UNLIMITED. C.B.C. 505.2

CONSTRUCTION TYPE :

EXISTING BUILDING
TYPE V ONE HOUR, WITH FIRE RESISITIVE SUBSTITUTION PER CBC SECTION 508

AREA OF NEW CONTRUCTION
FULLY SPRINKLERED

TYPE V ONE HOUR CONSTRUCTION IS ALLOWABLE SINCE THE FLOOR AREA DOES NOT EXCEEED 5,200 S.F. BETWEEN SEPARATION WALLS OF TWO HOUR FIRE RESISTIVE CONSTRUCTION WITH OPENINGS PROTECTED BY FIRE ASSEMBLIES HAVING A ONE AND ONE-HALF HOUR FIRE PROTECTIVE RATING. C.B.C. 308.2.2.2

OCCUPANCY :

EXISTING BUILDING	B, S-3
AREA OF NEW CONTRUCTION	I-3

DEFERRED SUBMITTAL ITEMS

1. FIRE SPRINKLER SYSTEM
2. HVAC MECHANICAL SYSTEMS AND CONTROLS (DESIGN-BUILD)

ITEMS REQUIRING SPECIAL INSPECTION

1. CONCRETE
2. STRUCTURAL MASONRY
3. BOLTS INSTALLED IN CONCRETE
4. HIGH STRENGTH BOLTING
5. STRUCTURAL WELDING
6. SPRAY APPLIED FIRE RESISTIVE MATERIALS
7. SMOKE CONTROL SYSTEM

NOTES

1. THE FIRE AND LIFE SAFETY REVIEW OF THIS PROJECT BY THE SFM IS LIMITED TO THE DETENTION AREA AND ITS EXIT SYSTEM AND DOES NOT EXTEND TO OTHER AREAS OF THE BUILDING. THE LOCAL FIRE AUTHORITY SHOULD BE CONSULTED.
2. APPROVAL OF THE AUTOMATIC FIRE ALARM SYSTEM AND THE AUTOMATIC SPRINKLER SYSTEM BY THE SATE FIRE MARSHAL IS DEFERRED. SHOP DRAWINGS OF THESE SYSTEMS MUST BE SUBMITTED TO THE STATE FIRE MARSHAL FOR APPROVAL PRIOR TO INSTALLATION.
3. THE FIRE AUTHORITY HAVING JURISDICTION SHALL BE CONSULTED REGARDING ACCESS ROADS, GATES IN PERIMETER FENCES, LOCATION OF FIRE HYDRANTS, FIRE EXTINGUISHERS, AND FIRE PROTECTION DURING CONSTRUCTION.
4. THE REVIEW AND APPROVAL OF THE AUTOMATIC SPRINKLER SYSTEM ON THIS PROJECT BY THE SFM IS LIMITED TO THE DETENTION AREA AND DOES NOT EXTEND TO OTHER AREAS OF THE BUILDING. THE LOCAL FIRE AUTHORITY SHOULD BE CONSULTED.
5. THE REVIEW AND APPROVAL OF THE AUTOMATIC FIRE ALARM SYSTEM ON THIS PROJECT BY THE SFM IS LIMITED TO THE DETENTION AREA AND DOES NOT EXTEND TO OTHER AREAS OF THE BUILDING. THE LOCAL FIRE AUTHORITY SHOULD BE CONSULTED.
6. BOARD OF CORRECTIONS NUMBER: 071-4374.01

VICINITY MAP

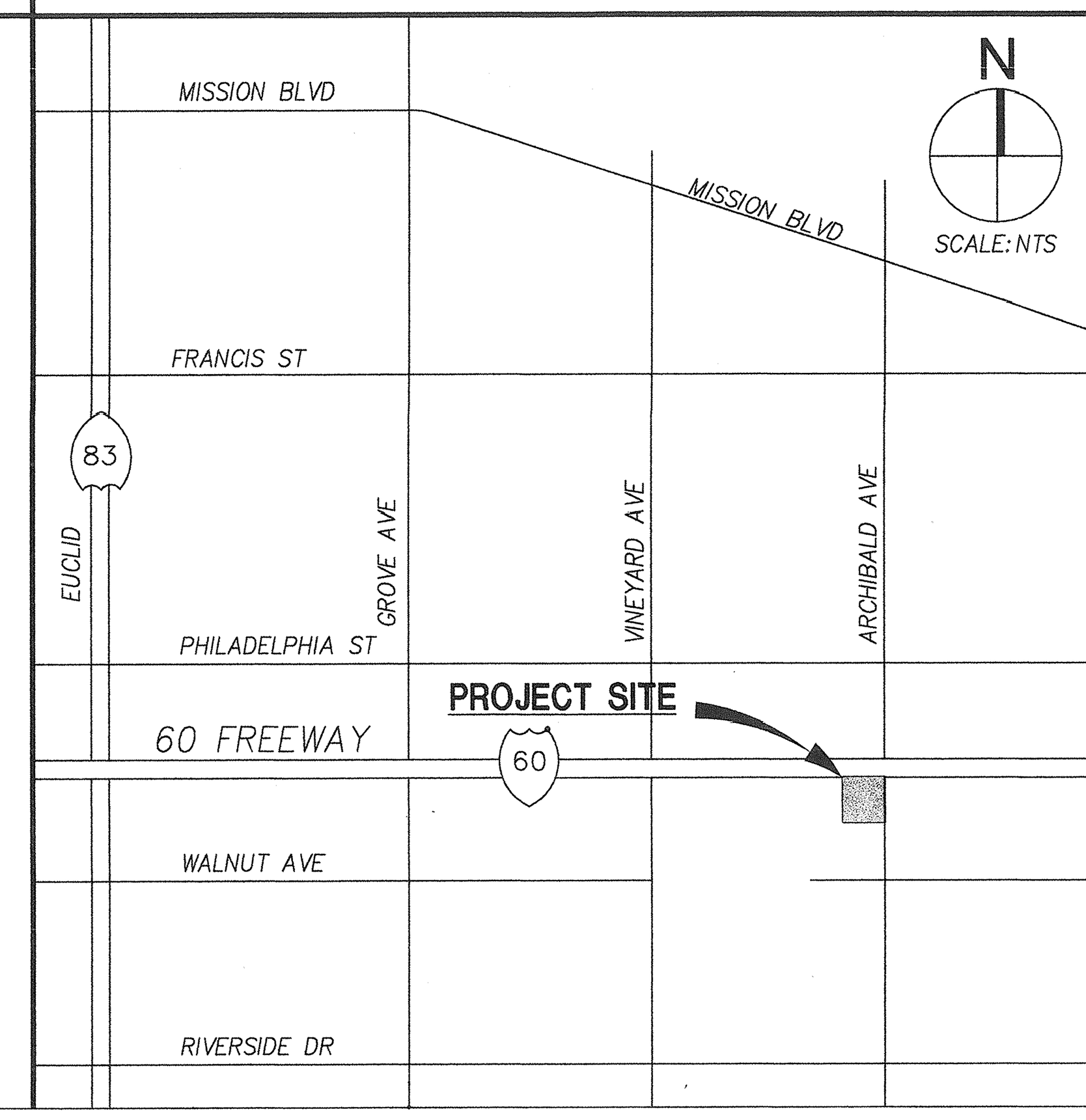

SHEET INDEX

ARCHITECTURAL

A0.1	COVER SHEET
A0.2	ACCESSIBILITY NOTES/ TITLE 24
A0.3	GENERAL NOTES
A0.4	MOUNTING HEIGHTS AND ACCESSORIES
A1.0.0H	OVERALL SITE PLAN
A1.0.1XH	FLOOR PLAN OVERALL KEY PLAN EXITING PLAN
A2.1.0XH	EXITING PLAN
A2.1.4H	TEMPORARY HOLDING AREA FLOOR PLAN AND REFLECTED CEILING PLAN
A6.0.1H	HOLDING AREA SECTIONS
A7.0.1H	INTERIOR ELEVATIONS AND CASEWORK SECTIONS
A8.0.1H	DETAILS
A8.0.2H	DETAILS
A8.0.3H	DETAILS
A9.0.1H	SCHEDULES, DOOR, FRAME, AND DOOR TYPES

STRUCTURAL

S1.1H	GENERAL NOTES AND SHEET INDEX
S1.2H	TYPICAL DETAILS
S1.3H	DETAILS
S2.1H	FOUNDATION AND ROOF FRAMING PLAN

MECHANICAL

REFER TO OVERALL BUILDING SET

PLUMBING

REFER TO OVERALL BUILDING SET

ELECTRICAL

REFER TO OVERALL BUILDING SET

PROJECT TEAM

OWNERS REPRESENTATIVE:
RDK CONSULTING, INC.
7742 HERSCHEL AVENUE, SUITE H
LA JOLLA, CA 92037
CONTACT: RICK KING
PHONE: 858.454.5996
FAX: 858.454.7448
EMAIL: rick@rdkconsulting.com

ARCHITECT:
CARRIER JOHNSON
2600 MICHELSON DRIVE, SUITE 400
IRVINE, CALIFORNIA 92614-6220
CONTACT: GARY MANGHAM
PHONE: 949.955.2353
FAX: 949.955.2377
EMAIL: wgm@carrierjohnson.com

CIVIL
PENCO ENGINEERING
ONE TECHNOLOGY PARK, BUILDING J-725
IRVINE, CA 92618
CONTACT: DAVE ELWELL
PHONE: 949.753.8111
FAX: 949.753.0775
EMAIL: david@pencoeng.com

STRUCTURAL
RDG
4850 BARRANCA PARKWAY, SUITE 205
IRVINE, CALIFORNIA 92604
CONTACT: JEFF ROESSLER
PHONE: 949.651.8111
FAX: 949.651.8177
EMAIL: RDGSE@AOL.com

PLUMBING
GEM ENGINEERING
17065 CAMINO SAN BERNARDO, SUITE 200
SAN DIEGO, CALIFORNIA 92127
CONTACT: JEREMY CLIFTON
PHONE: 858.753.1000
FAX: 858.753.1001
EMAIL: clifton@gemengineering.com

ELECTRICAL
ILA ZAMMIT
3625 RUFFIN ROAD, SUITE 300
SAN DIEGO, CALIFORNIA 92123
CONTACT: FRED WOLFF
PHONE: 858.279.0242
FAX: 858.279.0711
EMAIL: fwolff@ilaz.com

LANDSCAPE
IMA DESIGN
2500 MICHELSON DRIVE, SUITE 125
IRVINE, CALIFORNIA 92612
CONTACT: ANN CUTNER
PHONE: 949.250.0023
FAX: 949.250.0043
EMAIL: acutner@imadesign.com

ARCHITECTURE
INTERIOR DESIGN
PLANNING

CARRIER JOHNSON

GORDON R. CARRIER AIA
MICHAEL C. JOHNSON AIA

WILLIAM C. BOCKEN AIA
DEBORAH P. ELLIOTT IIDA

2600 MICHELSON DRIVE
SUITE 400
IRVINE, CALIFORNIA
92612
TEL 949 955-2353
FAX 949 955-2377

1301 THIRD AVENUE
SAN DIEGO, CALIFORNIA
92101
TEL 619 239-2353
FAX 619 239-6227

RECORD DOCUMENTS

THESE DOCUMENTS RELEASED BY CARRIER JOHNSON FOR USE AS RECORD DOCUMENTS WILL SHOW THE REPORTED LOCATION OF THE WORK AND SIGNIFICANT CHANGES MADE DURING THE CONSTRICTION PROCESS, AND ARE BASED ON UNVERIFIED INFORMATION PROVIDED BY THE CONTRACTOR AND OTHER PARTIES WHICH WILL BE ASSUMED RELIABLE. CARRIER JOHNSON CANNOT AND DOES NOT WARRANT THE ACCURACY AND/OR COMPLETENESS OF THIS INFORMATION AND SHALL NOT BE RESPONSIBLE FOR ANY ERRORS OR OMISSIONS WHICH MAY BE INCORPORATED THEREIN AS A RESULT. FUTURE CONSTRUCTION PLANNING MUST INCLUDE FIELD CONFIRMATION OF EXISTING CONDITIONS.

ONTARIO PD::
TEMPORARY HOLDING AREA
2534 S. ARCHIBALD AVE., ONTARIO, CALIFORNIA 91761

B.O.C. Re-Submittal 07.30.03
F13 Field Order #13 07.01.03
F9 Bldg. Dept./B.O.C. Re-Submittal 06.06.2003

ISSUES:
DIRECTORY/FILE NUMBER: 4511-A01
XREF'S DRAWINGS:
PROJECT NUMBER: 4511.00
DRAWN BY: CHECKED BY:
DATE: 3/26/03
SCALE: AS NOTED
TITLE: COVER SHEET

DRAWING NO: A0.1

... WITH THIS PROJECT. NONE OF SUCH IDEAS, DESIGN, ARRANGEMENTS, OR PLANS SHALL BE USED BY, OR DISCLOSED TO ANY PERSON, FIRM, OR CORPORATION FOR ANY PURPOSE WHATSOEVER WITHOUT THE WRITTEN PERMISSION OF CARRIER JOHNSON. FILING THESE DRAWINGS OR SPECIFICATIONS WITH ANY PUBLIC AGENCY IS NOT A PUBLICATION OF SAME. NO COPYING, REPRODUCTION OR USE THEREOF IS PERMISSIBLE WITHOUT THE CONSENT OF CARRIER JOHNSON.

ACCESSIBILITY NOTES PER 2001 CALIFORNIA BUILDING CODE - TITLE 24

REQUIREMENTS FOR ACCESS TO BUILDINGS BY PHYSICALLY DISABLED PERSONS

The following notes are shown on this set of drawings for general informational purposes only. The Contractor shall proceed with the construction of this Project only as specifically detailed on the Drawings and described in the Specifications. Any discrepancies found between the Drawings/Specifications and the following notes, either by the Contractor or the DSA inspector, shall be immediately brought to the University Representative's attention prior to proceeding with any changes to the Construction Documents or modifying existing construction.

SITE DEVELOPMENT

WALKS + SIDEWALKS

Walks and sidewalks shall have a continuous common surface not interrupted by steps or by abrupt changes in level exceeding 1/2", and shall be a minimum of 48" in width. Sec. 1133B.7.1

When abrupt changes in level not exceeding 1/2" occur, they shall be beveled with a slope no greater than 1:2, except that level changes not exceeding 1/4" may be vertical. Sec. 1133B.7.4 & Fig. 11B-5E (c) and (d)

Abrupt changes in level along any accessible route exceeding 1/2" shall comply with the requirements for curb ramps. Sec. 1133B.7.4

Walks, sidewalks, and pedestrian ways shall be free of gratings whenever possible. For gratings located in the surface of any of these areas, grid openings in gratings shall be no greater than 1/2" wide in one direction. If gratings have elongated openings, they shall be placed so that the long dimension is perpendicular to the dominant direction of travel. Sec. 1133B.7.2 & Fig. 11B-7B (a)

When the slope in the direction of travel of any walk exceeds 1 vertical to 20 horizontal it shall comply with the provisions of Section 1007 as a pedestrian ramp. Sec. 1133B.7.3

Walk and sidewalk surface cross slopes shall not exceed 1/4" per foot. Sec. 1133B.7.1.3

Walks shall be provided with a level area not less than 60" by 60" at a door or gate that swings toward the walk, and not less than 48" wide by 44" deep at a door or gate that swings away from the walk. Sec. 1133B.7.5

Walks shall extend a minimum of 24" to the side of the strike edge of a door or gate that swings toward the walk. Sec. 1133B.7.5, Fig. 11B-26B

All walks with continuous gradients shall have level areas at least 5' in length at intervals of at least every 400'. Sec. 1133B.7.6

Walk and sidewalk surfaces shall be slip-resistant as follows: Sec. 1133B.7.1:

a. Surfaces with a slope of less than 6% gradient shall be at least as slope-resistant as that described as a medium salted finish. Sec. 1133B.7.1.1

b. Surfaces with a slope of 6% gradient shall be slip-resistant. Sec. 1133B.7.1.2

ENTRANCES + EXITS

All entrances and all exterior ground-level exits shall be accessible in compliance with Section 1114B.1.3

All building entrances that are accessible shall be identified with at least one standard sign and with additional directional signs, as required, to be visible to persons along approaching pedestrian ways. Sec. 1127B.3

PARKING

Accessible parking spaces serving a particular building shall be located on the shortest accessible route of travel from adjacent parking to a primary entrance. Sec. 1129B.1

In buildings with multiple accessible entrances with adjacent parking, accessible parking spaces shall be dispersed and located closest to the accessible entrances. Sec. 1129B.1

The minimum length of an accessible parking space shall be 18'. Sec. 1129B.4.1 & Fig. 11B-18A

One in every eight accessible spaces, but not less than one, shall be served by an access aisle 8' wide minimum and shall be designated van accessible. All such spaces may be grouped on one level of a parking structure. Sec. 1129B.4.2

Surface slopes of accessible parking spaces, but not less than one, shall be served by an access aisle 8' wide minimum and shall be designated van accessible. All such spaces may be grouped on one level of a parking structure. Sec. 1129B.4.2

All entrances to and vertical clearances with parking structures shall have a minimum vertical clearance of 8'-2" where required for accessibility to accessible parking spaces. Sec. 1130B

In each parking area, a bumper or curb shall be provided and located to prevent encroachment of cars over the required width of walkways. Sec. 1129B.4.3

Pedestrian ways which are accessible to people with disabilities shall be provided from each such parking space to related facilities, including curb cuts or ramps as needed. Sec. 1129B.4.3

Ramps shall not encroach into any parking space, with the exception of a transition ramp from a loading/unloading area to an adjacent sidewalk. The transition ramp shall be a minimum of 48" in width, a maximum of 60" in length, with a maximum slope of 1:12. Sec. 1129B.4.3 & Fig. 11B-18A through C

Accessible parking spaces shall be so located that persons with disabilities are not compelled to wheel or walk behind parked cars other than their own. Sec. 1129B.4.3.3

Each parking space reserved for persons with disabilities shall be identified by a reflectorized sign permanently posted immediately adjacent to and visible from each stall or space, consisting of a profile view of a wheelchair with occupant in white on dark blue background. The sign shall not be smaller than 70 square inches in area and, when in a path of travel, shall be posted at a minimum height of 80" from the bottom of the sign to the parking space finished grade. Sec. 1129B.5

Van accessible parking spaces shall have an additional sign stating "Van-Accessible" mounted below the symbol of accessibility. Maintain 80" height. Sec. An additional sign shall also be posted, in a conspicuous place, at each entrance to off-street parking facilities, or immediately adjacent to and visible from each stall or space. The sign shall e not less than 17" x 22" in size with lettering not less than 1" in height, which clearly and conspicuously states the "Unauthorized vehicles parked in designated accessible spaces not displaying distinguishing placards or license plates issued for persons with disabilities may be towed away at Owner's expense. Towed vehicles may be reclaimed at or by telephoning ." Note: Blank spaces are to be filled in with appropriate information as a permanent part of the The surface of each accessible parking space or stall shall have a surface identification duplicating either of the following schemes: Sec. 1129B.5 & Fig. 11B-18A through C

a. By outlining or painting the stall or space in white or suitable contrasting color a profile view depicting a wheelchair with occupant;

or

b. By outlining a profile view of a wheelchair with occupant in white on blue background. The profile view shall be located so that it is visible to a traffic enforcement officer when a vehicle is properly parked in the space and shall be 36" high by 36" wide.

PEDESTRIAN RAMPS

The maximum slope of a ramp that serves any exitway, provides access for persons with disabilities, or is in the path of travel shall be 1' rise in 12' of horizontal run. Sec. 1003.3.4.3 & 1133B.5.3

The surface of ramps shall be roughened or shall be of slip-resistant materials, per 1003.3.4.8. The cross slope shall be no greater than 2 Pedestrian ramps serving primary entrances to buildings having an occupant load of 300 or ore shall have a minimum clear width of 60". Sec. 1133B.5.2.2

All other pedestrian ramps serving primary entrances shall have minimum width of 48". Sec. 1133B.5.2.2

Landing shall be provided at the top and bottom of each ramp. Sec. 1003.3.4.4, 1133B.5.4.1 & Fig. 11B-38

Intermediate landings shall be provided at intervals not exceeding 30" of vertical rise and at each change of direction. Sec. 1133B.5.4.1 & Fig. 11B-38

Top landings shall be not be less than 60' wide and shall have a length of not less than 60" in the direction of ramp run. Sec. 1003.3.4.4, 1133B.5.4.2 & Fig. 11B-38

Doors in any position shall not reduce the minimum dimension of the ramp landing to less than 42" and shall not reduce the required width by more than 7" when fully open. Sec. 1003.3.4.4 & Fig. 11B-39

The width of the landing shall extend 24" past the strike edge of any door or gate for exterior ramps and 18" past the strike edge of interior ramps. Sec. 1003.3.4.4, 1133B.5.4.4 & Fig. 11B-39

At bottom and intermediate landings, the width shall be at least the same as required for the ramp. Sec. 1003.3.4.4 & Fig. 11B-38

Intermediate and bottom landings at a change of direction in excess of 30 degrees shall have a dimension in the direction of ramp run of not less than 72" to accommodate the handrail extension. Sec. 1133B.5.4.6, Fig. 11B-38 (b) & 11B-39 (a)

Other intermediate landings shall have a dimension in the direction of ramp run of not less than 60". Sec. 1003.3.4.4, 1133B5.4.7 & Fig. 11B-38 (a)

Handrails shall be placed on each side of each ramp, shall be continuous the full length of the ramp, shall be 34" to 38" above the ramp, shall extend a minimum of 1' beyond top and bottom of the ramp, and the ends shall be returned. Sec. 1133B.5.5.1 Fig. 11B-27 (b) & (c). The grip portion of the handrails shall be not less than 1-1/4" nor more than 1-1/2", or the shape shall provide an equivalent gripping surface, and all surfaces shall be smooth with no sharp corners. Handrails shall not rotate within their fittings. Sec. 1133B.5.5.1 & Fig. 11B-36.

Handrails projecting from a wall shall have a space 1-1/2" between the wall and the handrail. Sec. 1133B.5.5.1. & Fig. 11B-36.

Any wall or other surface adjacent to the handrails shall be free of sharp or abrasive elements. Edges shall have a minimum radius of 1/8". Sec. 1133B.5.5.1 & Fig. 11B-36 (c). Where the ramp surface is not bounded by a wall or fence and the ramp exceeds 10' in length, the ramp shall comply with one of the following requirements: Sec. 1133B.5.6, Fig. 11B-27 (b) & (c).

a. A guide curb a minimum of 2" in height shall be provided at each side of the ramp, Sec. 1133B5.6.1

or

b. A wheel guide rail shall be provided, centered 3" + 1" above the surface of the ramp. Sec. 1133B5.6.2

CURB RAMPS

1. Curb ramps shall be a minimum of 4' in width and shall lie, generally, in a single sloped plane, with a minimum of surface warping and cross slope. Sec. 1127B.5.2

2. The slope of curb ramps shall not exceed 1 vertical to 12 horizontal. Sec. 1127B.5.3

3. Maximum slopes of adjoining gutters, road surface immediately adjacent to the curb ramps, or accessible route, shall not exceed 1:20 within 4' of the top and bottom of the curb ramp. The slope of the fanned or flared sides of curb ramps shall not exceed 1 vertical to horizontal. Sec. 1127B.5.3

4. A level landing 4' deep shall be provided at the upper end of each curb ramp over its full width to permit safe egress from the ramp surface, or the slope of the fanned or flared sides of the curb ramp shall not exceed 1 vertical to 12 horizontal. Sec 1127B.5.4

5. Transitions from ramps to walks, gutters, or streets shall be flush and free of abrupt changes, except that the lower end of each curb ramp shall have a 1/2" lip beveled at 45 degrees. Sec 1127B.5.3 & 1127B.5.5

6. If diagonal (corner type) curb ramps have returned curbs or other well-defined edges, such edges shall be parallel to the direction of pedestrian flow. The bottom of diagonal curb ramps shall have 48 inches minimum clear space, Figures 11B-22(c) & 11B-22(d). If diagonal curb ramps are provided at marked crossings, the 48" clear space shall be within the markings, Figures 11B-20.C & D. If diagonal curb ramps have flared sides, they shall also have at least a 24" long segment of straight curb located on each side of the curb ramp and within the marked crossing, Figures 11B-22.c Sec. 1127B.5.10

7. All curb ramps shall have a grooved border 12 inches wide at the level of the surface of the sidewalk along the top and each side. Sec 1127B.5.7

8. A curb ramp shall have a detectable warning that extends the full width and depth of the curb ramp inside the grooved border when the ramp slope is less than 1 vertical to 15 horizontal. Detectable warnings shall consist of raised truncated domes with a diameter of nominal 0.9" at the base tapering to 0.45" at the top, a height of nominal 0.2", and a center-to-center spacing of nominal 2.35", in compliance with Figure 11B-23B. "Nominal", as used here shall be in accordance with Section 12-31-102, State Referenced Standards Code. The detectable warning shall contrast visually with adjoining surfaces, either light-on-dark or dark-on-light. The material used to provide contrast shall be an integral part of the walking surface. The domes may be constructed in a variety of methods, including cast-in-place or stamped, or may be part of a prefabricated surface treatment. Sec 1127B.5.8

9. Curb ramps shall be located or protected to prevent their obstruction by parked cars. Sec 1127B.5.9

10. Surfaces of curb ramps and its flared sides shall be stable, firm, and slip-resistant and shall be of a contrasting finish from the adjacent sidewalk. Sec 1127.B.5.6

SANITARY

A. General

1. Doorways leading to men's sanitary facilities shall be identified by an equilateral triangle 1/4" thick with edges 12" long and a vertex pointing upward. Women's sanitary facilities shall be identified by a circle 1/4" thick and 12" in diameter. Sec 1115.B.5

2. Unisex sanitary facilities shall be identified by a circle 1/4" thick, 12" diameter, with a 1/4" thick triangle superimposed on the circle and within the 12" diameter. Sec 1115.B.5

3. Geometric (circle and triangle) symbols on sanitary facility doors shall be centered on the door at a height of 60" and their color and contrast shall be distinctly different from the color and contrast of the door. Sec 1115.B.5

4. Additional signage requirements: Raised letters shall be provided and shall be accompanied by Braille in conformance with Section 1117B.5.6. They shall be installed on the wall adjacent to the latch outside of the door. Where there is no wall space on the latch side, including at double leaf doors, signs shall be placed on the nearest adjacent wall, preferably on the right. Mounting height shall be 60 inches above the finish floor to the center line of the sign. Mounting location shall be determined so that a person may approach within 3 inches of signage without encountering protruding objects or standing within the swing of a door. Sec 1117B.5.9

B. Single Accommodation Sanitary Facilities

NOTE: Single accommodation Sanitary Facility is defined as "a room that has not more that one of each type of sanitary fixture, is intended for use by only one person at a time, has no partition around the toilet, and has a door that can be locked on the inside by the room occupant." SEC 220.12

1. There shall be sufficient space in the toilet room for a wheelchair measuring 30" wide by 48" long to enter the room and permit the door to close. Sec. 1115B.7.2

2. There shall be in the room a clear floor space of at least 60" in diameter, or a T-shaped space complying with Figures 11B-12(a) and (b). No door shall encroach into this space. Sec 1115B.7.2 & Fig. 11B-1A

3. The water closet shall be located in a space which provides a minimum 28" wide clear space from a fixture or a minimum 32" wide clear space from a wall at one side. The other side shall provide 18" from the center line of the water closet to the wall. A minimum 48" clear space shall be provided in front of the water closet. Sec. 1115B.7.2 & Fig. 11B-1A

4. All doors, fixtures and controls shall be on an accessible route with a minimum clear width of 36" except at doors. If a person in a wheelchair must make a turn around an obstruction, the minimum clear width of the accessible route shall be as shown in Figure 11B-5E. Sec. 1115B.7.2

C. Multiple Accommodation Sanitary Facilities

NOTE: Multiple Accommodation Sanitary Facility is defined as "a room that has more than one sanitary fixture, is intended for the use of more than one person at a time, and which usually is provided with privacy compartments or screens shielding some fixtures from view." Sec. 214.13

1. A clear space measured from the floor to a height of 27" above the floor, within the sanitary facility room, of sufficient size to inscribe a circle with a diameter not less than 60", or a clear space 56" by 63" in size, shall be provided for wheelchair maneuvering. Doors other than the door to the accessible toilet compartment in any position may encroach into this space by not more than 12". Sec. 1115B.7.1.1 & Fig. 11B-1B

2. A water closet fixture located in a compartment shall provide a minimum 28" wide clear space from a fixture or a minimum 32" wide clear space from a wall at one side of the water closet. The other side of the water closet shall provide 18" from the center line of the water closet to the wall. Grab bars shall not project more than 3" into these clear space. Sec. 1115B.7.1.2 & Fig. 11B-1B

3. A minimum 48" long clear space shall be provided in front of the water closet if the compartment has an end opening door and a minimum 60" long clear space shall be provided in front of the water closet if the compartment has a door located at the side. Grab bars shall not project more than 3" into these clear spaces. Sec. 1115B7.1.2, Fig. 11B-1A & 1B

4. Water closet compartments shall be equipped with a door that has an automatic-closing device, and shall have a clear, unobstructed opening width of 32" when located at the end and 34" when located at the side with the door positioned at an angle of 90 degrees from its closed position. Sec 1115B.7.1.3, Fig. 11B-1A & 1B

5. When standard compartment doors are used, with a minimum clearance for footrests underneath and a self-closing device, clearance at the strike edge as specified in Section 1004.9.2.2 is not required. Sec. 1115B.7.1.3

6. The inside and outside of the compartment door shall be equipped with a loop or U-shaped handle immediately below the latch. The latch shall be flip-over style, sliding, or other hardware not requiring the user to grasp or twist. Sec. 1115B.7.1.3

7. Except for door opening widths and door swings, a clear, unobstructed access not less than 44" shall be provided to water closet compartments designed for use by persons with disabilities and the space immediately in front of a water closet compartment shall be not less than 48" as measured at a right angle to compartment door in its closed position. Sec. 1115B.7.1.3 & Fig. 11B-1B

8. Where six or more stalls are provided within a multiple accommodation toilet room, in addition to the standard accessible stall required above, at least on additional stall shall be provided with a width of 36" with an outward swinging self-closing door and parallel grab bars complying with Sections 1115B.8.2 through 115B.8.4. Sec. 1115B.7.1.5

D. Sanitary Facility Fixtures + Accessories

1. The height of accessible water closets shall be a minimum of 17" and a maximum of 19" measured to the top of a maximum 2" high toilet seat, except that 3" seats shall be permitted only in alterations where the existing fixture is less than 15" high. Sec. 1502 of Plumbing Code.

2. A clear floor space 30" by 48" shall be provided in front of a lavatory to allow a forward approach. Such clear floor space shall adjoin or overlap an accessible route and shall extend into knee and toe space underneath the lavatory. Sec. 1115B.9.1.1

3. Lavatories adjacent to a wall shall be mounted with a minimum distance of 18" to the center line of the fixture. Sec. 1504.1.1. Fig. 11B-1A

4. Lavatories shall be mounted with the rim or counter surface no higher than 34" above the finished floor and with a clearance of at least 29" from the floor to the bottom of the apron with knee clearance under the front lip extending a minimum of 30" in width and 8" minimum depth at the top. Toe clearance shall be the same width and shall be a minimum of 9" high from the floor and a minimum of 17" deep from the front of the lavatory. Sec. 1504.1.1

5. Hot water and drain pipes under lavatories shall be insulated or otherwise covered. There shall be no sharp or abrasive surfaces under lavatories. Sec. 1504.1.2

6. Where urinals are provided, at least one shall have a clear floor space 30" by 48" in front of the urinal to allow forward approach. Sec. 1115B.9.4

7. Where one or more urinals are provided, at least one with a rim projecting a minimum of 14" from the wall and at a maximum of 17" above the floor shall be provided. Sec. 1503.1.1

8. Controls for water closet flush valves shall be mounted on the side of toilet areas. Sec. 1502

9. Water closet and urinal flush valve controls, and faucet and operating mechanism controls, shall be operable with one hand, shall not require tight grasping, pinching, or twisting of the wrist, and shall be mounted no more than 44" above the floor. Sec. 1502, 1503 & 1504

10. The force required to activate water closet and urinal flush valve controls, and faucet and operating mechanism controls, shall be no greater than 5 lbf. Sec. 1502, 1503, & 1504

11. Self-closing faucet control valves are allowed if the faucet remains open for at least 10 seconds. Sec. 1504.1.3

12. Mirrors shall be mounted with the bottom edge no higher than 40" from the floor. Sec. 1115B.9.1.2

13. Where towels, sanitary napkins, waste receptacles, and other similar dispensing and disposal fixtures are provided, at least one of each type shall be located with all operable parts, including coin slots, within 40" from the finished floor. Sec. 1115B.9.2

14. Toilet tissue dispensers shall be located on the wall within 12" of the front edge of the toilet seat and no lower than 19" from the floor. Dispensers that control delivery or that do not permit continuous paper flow shall not be used. Sec. 1115B.9.3 & Fig. 11B-1A

15. Toilet room floors shall have a smooth, hard, nonabsorbent surface such as Portland cement, concrete, ceramic tile or other approved material which extends upward onto the walls at least 5". Walls within water closet compartments and walls within 24" of the front and sides of urinals shall be similarly finished to a height of 48" and, except for structural elements, the materials used in such walls shall be a type which is not adversely affected by moisture. Sec. 1115B.9.5

E. Grab Bars

1. Grab bars shall be located on each side, or on one side and the back of the accessible toilet stall or compartment. Sec. 1115B.8.1 & Fig. 11B-1A through 11B-1C

2. Grab bars at the side shall be at least 42" long with the front end positioned 24" in front of the water closet stool and with the back and positioned no more than 12" from the rear wall. Grab bars at the back shall be not less than 36" long. Sec. 1115B.8.1 & Fig. 11B-1A through 11B-1C.

3. Grab bars shall be securely attached 33" above and parallel to the floor, except that where a tank-type toilet is used which obstructs placement at 33", the grab bar may be as high as 36". Sec. 1115B.8.1 & Fig. 11B-1A through 11B-1C

4. The diameter or width of the gripping surfaces of a grab bar shall be 1-1/4" to 1-1/2" or the shape shall provide an equivalent gripping surface. If grab bars are mounted adjacent to a wall, the space between the wall and the grab bars shall be 1-1/2". Sec. 1115B.8.2 & Fig. 11B-1C

5. The structural strength of grab bars, tub and shower seats, fasteners, and mounting devices shall meet the specifications of Sec. 1115B.8.3

6. The grab bar and any wall or other surface adjacent to it shall be free of any sharp or abrasive elements. Edges shall have a minimum radius of 1/8". Sec. 1115B.8.4

F. Bathing facilities + Lockers

1. Where facilities for bathing are provided for the public, clients, or employees, including showers, bathtubs, or lockers, at least one such facility, shall be made accessible. Sec. 1115B.6 than 1

2. Compartment showers shall be 42" in width between wall surfaces and 48" in depth with an entrance opening width of 42" minimum. Sec. 1115B.6.2.1

3. Provide grab bars for compartment showers which comply with Section 1115B.8. Sec. 1115B.6.2.4.2 & Fig. 11B-2A

4. Thresholds or recessed drops at compartment showers shall be a maximum of 1/2" in height and shall be beveled or sloped at an angle not exceeding 45 degrees from the horizontal. Sec. 1115B.6.2.2

5. Compartment shower floors shall slope toward the rear to a drain located within 6" of the rear wall, with a maximum floor slope of 1/2" per foot in any direction. The floor surfaces shall be of Carborundum or grit-faced tile or of material providing equivalent slip-resistance. Sec. 1115B.6.2.3

6. The following compartment shower accessories shall be provided: Sec. 1115B.6.2.4.5 & Fig. 11B-2A a. A folding seat located within 27" of the controls and mounted 18" above the bathroom floor. When folded, the seat shall not extend more than 6" from the mounting wall. Sec. 1115B.6.2.4.5 b. L-shaped grab bars located on walls adjacent to and opposite the seat. Grab bars shall comply with diameter, loading, and projection requirements of Section 1115B.8. Grab bars shall be not less than 33" or higher than 36" in height, with an L- shaped grab bar mounted on walls opposite and adjacent to the front edge of the seat, but not extended to include that portion of wall over the seat. Sec. 1115B.6.2.4.5, Fig. 11B-2A or 11B-2B d. Soap dish located on the control wall at a maximum height of 40" above the floor.

7. Showers shall be finished with a smooth, hard, nonabsorbent surface such as Portland cement, concrete, ceramic tile, or other approved material to a height of not less than 70" above the drain inlet. Materials other than structural elements used in such walls shall be of a type which is not adversely affected by moisture. Sec. 1115B.9.6

8. A flexible hand-held shower unit with a hose at least 60" long shall be provided with a head mounting height of 48" + 1" maximum above the shower floor. Sec. 1505.2, Sec. 1115B.6.2.4.2 & Fig. 11B-2A 9. Water controls for showers of a single lever design shall be located on the side wall adjacent the seat, 40"+ 1" above the shower floor and shall be operable with a maximum force of 5 plf. Sec 1505(a) & Fig. 11B-2A

ENTRANCES, EXITS, DOORS + AREAS FOR EVACUATION ASSISTANCE

A. Entrances, Exits, + Doors

NOTE: For the purpose of Title 24, the use of the term Exit Door in Section 1003.3.1, shall mean all of those doors or doorways along the pass of exit travel anywhere in a means of egress system.

1. Accessibility to buildings or portions of buildings shall be provided for all occupancy clasifications except as modified or enhanced by this chapter. Sec. 1103B All entrances and exterior ground-floor exit doors to buildings and facilities shall be made accessible to persons with disabilities. Sec. 1133B.1.1.1.1

2. Regardless of the occupant load served, exit doors shall be openable from the inside without the use of a key or any special knowledge or effort. Sec. 1003.3.1.8

3. Hand-activated door opening hardware shall be centered between 30" and 44" above the floor. Sec. 1133B.2.5

4. Every doorway which is located within an accessible path of travel shall be of a size as to permit the installation of a door not less than 3' in width and not less than 6'-8' in height. When installed, exit doors shall be capable of opening so that the clear width of the exit is not less than 32". Sec 1003.3.1.3a, Fig. 11B-33

5. For hinged doors, the opening width shall be measured with the door positioned at an angle of 90 degrees from its closed position. Sec. 1003.3.1.3a, 1133B.2.3 & Fig. 11B-33(a)

6. Where a pair of doors is utilized, at least one of the doors shall provide a clear, unobstructed opening width of 32" with the leaf positioned at an angle of 90 degrees from its closed position. Sec. 1133B.2.3.1

7. Minimum maneuvering clearances at doors shall be as shown in Figure 11B-26a and b. The floor or ground area within the required clearances shall be level and clear. Sec. 1133B.2.4.2

8. There shall be a level and clear floor of landing on each side of a door. The level area shall have a length in the direction of door swing of at least 60" and the length opposite the direction of door swing of 48" as measured at right angle to the plane of the door in its closed position. Sec. 1003.3.1.6.2a, 1133B.2.4, 1133B.2.4.2, Fig. 11B-26

9. Regardless of the occupant load served, landings shall have a width not less than the width of the door or the width of the stairway served. Sec. 1003.3.1.7

10. The width of the level area on the side to which the door swings shall extend a minimum of 24" past the strike edge of the door for exterior doors and a minimum of 18" past the strike edge for interior doors. Additional 12" is required at the push side, if door is equipped with both latch and closer. Sec. 1133B.2.4.3 & Fig. 11B-26A.

11. The floor or landing shall be not more than 1/2" lower than the threshold of the doorway. Sec. 1003.3.1.6, & Fig. 11B-32

12. The space between two consecutive door openings in a vestibule, serving other than a required exit stairway, shall provide a minimum of 48" of clear space from any door opening into such vestibule when the door is positioned at an angle of 90 degrees from its closed position. Doors in a series shall swing either in the same direction or away from the space between the doors. See Figures 11B-30 & 11B-31 for design alternatives. Sec. 1133B.2.4.4

13. The bottom 10" of all doors except automatic and sliding shall have a smooth, uninterrupted surface to allow the door to be opened by a wheelchair footrest without creating a trap or hazardous condition. Where narrow frame doors are used, a 10" high smooth panel shall be installed on the push side of the door, which will allow the door to be opened by a wheelchair footrest without creating a trap or hazardous condition. Sec. 1133B.2.6 & Fig. 11B-29

14. Maximum effort to operate doors shall not exceed 8-1/2 pounds for exterior doors, and 5 pounds for interior doors, such pull or push effort being applied at right angles to hinged doors and at the center plane of sliding or folding doors. Compensating devices or automatic door operators may be utilized to meet the above standards.

STAIRWAYS

1. Stairways shall have handrails on each side, and every stairway required to be more than 88" in width shall be provided with not less than one intermediate handrail for each 88" of required width. Intermediate handrails shall be spaced approximately equally across the entire width of the stairway. Sec. 1003.3.3.6

2. Handrails shall be 34" to 38" above the nosing of the treads. Sec. 1003.3.3.6 & Fig. 11B-35

3. Handrails shall extend a minimum of 12" beyond the top nosing and 12" plus the tread width beyond the bottom nosing. Sec. 1003.3.3.6, 1133B.4.2.2, Fig. 11B-35 & Fig. 11B-37

4. Where the extension of the handrail in the direction of the stair run would create a hazard, the termination of the extension shall be made either rounded or returned smoothly to the floor, wall, or post. Where the stairs are continuous from landing to landing, the inner rail shall be continuous and need not extend out into the landing. Sec. 1133B.4.2.4 & Fig. 11B-37

5. Ends shall be returned or terminated in newel posts or safety lift. Sec. 1003.3.3.6 & 1133B.4.2.3

6. Handrails projecting from a wall shall have a space of 1-1/2" between the wall and the handrail. Handrails may be located in a recess if the recess is a maximum of 3" deep and extends at least 18" above the top of the rail. Sec. 1003.3.3.6, 1133B.4.2.5 & Fig. 11B-36

7. The upper approach and the lower tread of each stair shall be marked by a strip of clearly contrasting color at least 2" and no more than 4" wide and placed parallel to and not more than 1" from the nose of the step or landing to alert the visually impaired. The strip shall be of a material that is at least a slip-resistant as the other treads of the stair. A painted strip shall be acceptable. Sec. 1133B.4.4 & Fig. 11B-35

8. Where stairways occur outside a building, the upper approach and all treads shall be marked by a strip of clearly contrasting color at least 2" and no more than 4" wide and placed parallel to and not more than 1" from the nose of the step or landing to alert the visually impaired. The strip shall be of a material that is at least as slip-resistant as the other treads of the stair. A painted strip shall be acceptable. Sec. 1133B.4.4 & Fig. 11B-35

9. All tread surfaces shall be slip-resistant. Treads shall have smooth, rounded, or chamfered, exposed edges, and no abrupt edges at the nosing (front edge). Sec. 1133B4.5.1

10. The nosing shall not project more than 1-1/2" past the face of the riser below. Sec. 1133B.4.5.2 & Fig. 11B-35

11. Open risers are not permitted. Sec. 1133B.4.5.3 & Fig. 11B-35

PUBLIC TELEPHONES

1. If public telephones are provided, they shall be made accessible. Sec. 1111A.1

2. A clear floor or ground space at least 30" by 48" that allows either a forward or parallel approach by a person using a wheelchair shall be provided at telephones. Sec. 1111A.2 & Fig. 11B-4

3. The highest operable part of the telephone shall be within reach ranges in Section 1111A.6, Fig. 11B-4

4. Telephones mounted diagonally in a corner that require wheelchair users to reach diagonally shall have the highest operable part no higher than 54" above the floor. Sec. 1111A.6 & Fig. 11B-4

5. The cord from the telephone to the handset shall be at least 29" long. Sec. 1111A.11

6. Telephones shall have push-button controls where service for such equipment is available. Sec. 1111A.10 7. If telephone enclosures are provided, they shall comply with the following: Sec. 1111A.7

a. For side approach telephones, the enclosure overhang shall be no greater than 19" and the height of the lowest overhanging part shall be equal to or greater than 27". Sec. 1111A.7.1 & Fig. 11B-4(a)

b. For forward approach telephones, if the enclosure overhang is greater than 12", the clear width of the enclosure shall be 30" minimum; if the clear width of the enclosure is less than 30", the height of the lowest overhanging part shall be equal to or greater than 27". Sec. 1111A.7.3 & Fig. 11B-4(c)

c. Entrances to full-height enclosures shall be 30" minimum. Sec. 1111A.7.2 & Fig. 11B-4(b)

ARCHITECTURE
INTERIOR DESIGN
PLANNING

CARRIER JOHNSON

GORDON R. CARRIER AIA
MICHAEL C. JOHNSON AIA

WILLIAM C. BOCKEN AIA
DEBORAH P. ELLIOTT IIDA

2600 MICHELSON DRIVE
SUITE 400
IRVINE, CALIFORNIA
92612

TEL 949 955-2353
FAX 949 955-2377

1301 THIRD AVENUE
SAN DIEGO, CALIFORNIA
92101

TEL 619 239-2353
FAX 619 239-6227

RECORD DOCUMENTS
THESE DOCUMENTS RELEASED BY CARRIER JOHNSON FOR USE AS RECORD DOCUMENTS WILL SHOW THE REPORTED LOCATON OF THE WORK AND SIGNIFICANT CHANGES MADE DURING THE CONSTRICTION PROCESS, AND ARE BASED ON UNVERIFIED INFORMATION PROVIDED BY THE CONTRACTOR AND OTHER PARTIES WHICH WILL BE ASSUMED RELIABLE. CARRIER JOHNSON CANNOT AND DOES NOT WARRANT THE ACCURACY AND/OR COMPLETENESS OF THIS INFORMATION AND SHALL NOT BE RESPONSIBLE FOR ANY ERRORS OR OMISSIONS WHICH MAY BE INCORPORATED THEREIN AS A RESULT. FUTURE CONSTRUCTION PLANNING MUST INCLUDE FIELD CONFIRMATION OF EXISTING CONDITIONS.

ONTARIO PD::
TEMPORARY HOLDING AREA
2534 S. ARCHIBALD AVE., ONTARIO, CALIFORNIA 91761

B.O.C. Re-Submittal 07.30.03
F13 Field Order #13 07.01.03
F9 Bldg. Dept./B.O.C. Re-Submittal 06.06.2003

ISSUES:
DIRECTORY/FILE NUMBER: 4511.00
4511-A02
XREF'S DRAWINGS:
PROJECT NUMBER: 4511.00
DRAWN BY: CHECKED BY:
DATE: 1/23/03 CHECKED BY:
SCALE:
TITLE: ACCESSIBILTY NOTES/ TITLE 24
DRAWING NO: A0.2

WITH THIS PROJECT. NONE OF SUCH IDEAS, DESIGN, ARRANGEMENTS, OR PLANS SHALL BE USED BY, OR DISCLOSED TO ANY PERSON, FIRM, OR CORPORATION FOR ANY PURPOSE WHATSOEVER WITHOUT THE WRITTEN PERMISSION OF CARRIER JOHNSON. FILING THESE DRAWINGS OR SPECIFICATIONS WITH ANY PUBLIC AGENCY IS NOT A PUBLICATION OF SAME. NO COPYING, REPRODUCTION OR USE THEREOF IS PERMISSIBLE WITHOUT THE CONSENT OF CARRIER JOHNSON.

GENERAL NOTES

A. GENERAL

1. ALL WORK INCLUDING MATERIALS AND WORKMANSHIP SHALL CONFORM TO THE REQUIREMENTS OF LOCAL CODES, LAWS, ORDINANCES, 2001 EDITION OF THE UNIFORM BUILDING CODES, AND CALIFORNIA 2001 CALIFORNIA BUILDING CODE AND 2000 UNIFORM FIRE CODE / N.F.P.A. 13 – FIRE SPRINKLER STANDARD, N.F.P.A. 72 – FIRE ALARM/MONITORING.
2. DIMENSIONS SHOWN ON THE FLOOR PLANS, SECTIONS AND DETAILS ARE TO FACE OF STUD, COLUMN GRID LINES AND FACE OF CONCRETE AND BLOCK WALLS, UNLESS OTHERWISE NOTED OR SHOWN.
3. DO NOT SCALE DRAWINGS. ALL DIMENSIONS SHALL TAKE PRECEDENCE OVER SCALE SHOWN ON PLANS, SECTIONS, AND DETAILS. IF THESE DRAWINGS ARE LESS THAN 30 INCHES BY 42 INCHES IN SIZE THEY HAVE BEEN REDUCED.
4. NOTES AND DETAILS ON DRAWINGS SHALL TAKE PRECEDENCE OVER GENERAL NOTES

B. EXITING

1. ALL EXIT DOORS SHALL BE OPENABLE FROM THE INSIDE, WITHOUT THE USE OF A KEY OF ANY SPECIAL KNOWLEDGE OR EFFORT, AND MUST SWING IN THE DIRECTION OF EXIT OVER A LANDING NOT MORE THAN 1/2" BELOW THRESHOLD [SECTION 1003.3.1 C.B.C. & PART III, ARTICLE 12, SECTION 1207, C.F.C.].
2. ALL CORRIDORS MUST MAINTAIN A MINIMUM UNOBSTRUCTED WIDTH OF 44" (SECTION 1004.3.4.2, C.B.C.).
3. ALL EXIT SIGNS SHALL BE POWERED BY TWO SEPARATE POWER SUPPLIES (CBC SECTION 1013.4) AND SHALL HAVE LETTERS 6 INCH HIGH AND 3/4 INCH WIDE, AND SHALL BE LIGHTED WITH TWO 15 WATT ELECTRIC LAMPS MINIMUM.
4. EXIT SIGNS WILL BE INTERNALLY ILLUMINATED. THE WORD 'EXIT' SHALL BE LETTERED IN GREEN ON A WHITE OR OPAQUE BACKGROUND (SECTIONS 1003.2.8 & 1013.3 CBC & PART III, ARTICLE 12, SECTION 1212.4 C.F.C).
5. ALL EXITS MUST BE PROVIDED WITH EMERGENCY LIGHTING , HAVING INTENSITY OF NOT LESS THAN ONE FOOT CANDLE AT FLOOR LEVEL (SECTION 1003.2.9 C.B.C.). THE POWER SUPPLY FOR THIS LIGHTING SHALL BE SIMILAR TO EXIT SIGN REQUIREMENTS.

C. MATERIALS AND FINISHES

1. ALL FINISH MATERIALS SHALL COMPLY WITH THE REQUIREMENTS OF CHAPTER 8 C.B.C. AND DIVISION IV, C.F.C.
2. ALL INTERIOR WALL AND CEILING FINISHES FOR EXIT CORRIDORS SHALL NOT EXCEED AN END POINT FLAMESPREAD of 75.
3. ANY DECORATION USED IN A PUBLIC AREA SHALL BE NON–COMBUSTIBLE OR FLAMEPROOFED IN AN APPROVED MANNER. (EXAMPLE: DRAPES, CURTAINS, SHADES, HANGINGS, ETC.)
4. CONTRACTOR SHALL PROVIDE ACCESS PANELS AS REQUIRED BY THE PLUMBING, MECHANICAL, AND AS REQUIRED BY THE BUILDING CODE. TYPE, FINISH AND LOCATION SHALL BE APPROVED BY THE ARCHITECT PRIOR TO FABRICATION AND INSTALLATION. CONTRACTOR TO SUBMIT A LOCATION PLAN FOR THE ARCHITECT'S REVIEW PRIOR TO INSTALLATION.
5. FIXED GLASS PANELS WITHIN 24" OF DOORS AND GLAZING WITHIN 18" OF A WALKING SURFACE MUST BE OF SAFETY GLAZING MATERIALS PER C.B.C. SECTION 2406.
6. SUSPENDED CEILING FRAMING SYSTEMS ARE TO BE DESIGNED FOR LATERAL FORCES AS OUTLINED IN THE C.B.C. SUPPORTS SHALL BE OF NON–COMBUSTIBLE CONSTRUCTION PER C.B.C.
7. WHERE INTERIOR SUSPENDED GYPSUM BOARD OR ACOUSTICAL TILE CEILINGS OCCUR BESIDE STANDARD HANGERS, THERE SHALL BE ONE "VARIABLE SEISMIC BRACE" EVERY 144 SQUARE FEET OF ANY GIVEN SUSPENDED CEILING SYSTEM. ATTACH 12 GA. HANGER WIRE TO PERIMETER, SUSPENDED RUNNER CHANNEL OR "TEE" AT 4'–0" O/C MAXIMUM, AND NOT TO EXCEED 6" FROM PERIMETER WALLS.
8. ALL FLOORS IN PUBLIC AREAS SHALL BE OF SLIP–RESISTANT SURFACE.
9. ELECTRICAL CONDUITS SHALL BE NON–COMBUSTIBLE CONSTRUCTION AT ALL WALL AND FLOOR PENETRATIONS.
10. SURFACES TO RECEIVE PAINT OR WALLCOVERING WILL BE PROPERLY SEALED, SANDED, ETC. PRIOR TO APPLICATION – LEVEL 4 FINISH.
11. TYPICAL FLOOR COVERING TRANSITION IS AT THE CENTERLINE OF THE DOOR OR AT THE CENTERLINE OPENING WHERE NO DOOR IS PRESENT U.N.O.
12. PATCH ALL AREAS WHERE FLOOR IS NOT LEVEL OR IS CRACKED PRIOR TO INSTALLING FINISH FLOORING, SEE SPECIFICATIONS FOR TOLERANCES.
13. "ALL DECORATIVE MATERIALS SHALL BE MAINTAINED IN A FLAME RETARDANT CONDITION," (C.A.C. TITLE 19, SECTION 1.14, 3.08, 3.21 AND DIVISION IV, C.F.C.).

D. FIRE PROTECTION

1. BUILDING NUMBER SHALL BE EASILY VISIBLE AND LEGIBLE FROM THE STREET OR ROAD FRONTING THE PROPERTY (PART III, ARTICLE 9, C.F.C. SECTION 901.4.4)
2. THE CONSTRUCTION, REMODEL OR DEMOLITION OF A BUILDING SHALL COMPLY WITH PART VII, ARTICLE 87, C.F.C.
3. THE CONTRACTOR WILL PROVIDE KEY (KNOX) BOXS IN ACCORDANCE WITH PART III, ARTICLE 9, SECTION 902.4, C.F.C. AS INDICATED ON THE DRAWINGS.
4. THE INSTALLATION OF AUTOMATIC FIRE SPRINKLER SYSTEMS SHALL COMPLY WITH THE NFPA 13, 1999 EDITION.
5. DRAWINGS FOR ALL FIXED FIRE PROTECTION EQUIPMENT SHALL BE SUBMITTED TO THE ONTARIO FIRE DEPARTMENT/STATE FIRE MARSHAL FOR APPROVAL PRIOR TO INSTALLATION.
6. PROVIDE A MINIMUM OF ONE 2A10BC CLASSIFICATION FIRE EXTINGUISHER WITHIN 75 FEET TRAVEL DISTANCE FOR EACH 6,000 SQUARE FEET OR PORTION THEREOF ON EACH FLOOR. (PART III, ARTICLE 10, & DIVISION V, C.F.C. STANDARDS 10–1 AND CAL. CODE REGULATIONS, TITLE 19, SECTION 3.29)
7. INTERIOR FINISH SHALL COMPLY WITH C.B.C. CHAPTER 8.
8. ALL DECORATIVE MATERIALS SHALL BE MAINTAINED IN A FLAME–RETARDANT CONDITION. (CCR, TITLE 19, SECTIONS 1.14, 3.08, 3.21 AND CFC SECTIONS 1103.3.3, 2501.5 & 2501.6, PART III, SECTIONS 1103 & DIVISION IV, C.F.C.)
9. PROVIDE ONE (1) WALL MOUNTED 4A20BC FIRE EXTINGUISHER AT EACH MECHANICAL, ELECTRICAL AND EQUIPMENT ROOM.
10. FIRE PROTECTION, INCLUDING FIRE APPARATUS, ACCESS ROADS AND WATER SUPPLIES FOR FIRE PROTECTION, SHALL BE MADE SERVICEABLE PRIOR TO AND DURING TIME OF CONSTRUCTION.(PART III, ARTICLES 9 & 81,C.F.C.).
11. FIRE HYDRANT LOCATIONS SHALL BE IDENTIFIED BY THE INSTALLATION OF REFLECTIVE MARKERS. (PART III, ARTICLE 9, SECTION 901.4.3, C.F.C)
12. EMERGENCY PLANS SHALL BE SUBMITTED TO THE ONTARIO FIRE DEPARTMENT FOR REVIEW AND APPROVAL PRIOR TO OCCUPANCY. (PART III, ARTICLE 13, SECTION 1303.4.2)
13. COMPLETE DRAWINGS AND SPECIFICATIONS FOR FIRE ALARM SYSTEMS, FIRE–EXTINGUISHING SYSTEMS, INCLUDING AUTOMATIC SPRINKLERS, WET AND DRY STANDPIPES, PIPE INLETS, AND OTHER SPECIAL TYPES OF AUTOMATIC FIRE–EXTINGUISHING SYSTEMS, THERETO SHALL BE SUBMITTED TO THE ONTARIO FIRE DEPARTMENT/STATE FIRE MARSHAL FOR REVIEW AND APPROVAL PRIOR TO INSTALLATION.
14. ALL VALVES CONTROLLING THE WATER SUPPLY FOR AUTOMATIC SPRINKLER SYSTEMS AND WATER–FLOW SWITCHES ON ALL SPRINKLER SYSTEMS SHALL BE ELECTRICALLY MONITORED WHERE THE NUMBER OF SPRINKLERS IS 100 OR MORE. (SECTION 904.3.1, C.B.C. & PART III, ARTICLE 10, SECTION 1003.3, C.F.C.)
15. STANDPIPE SYSTEMS SHALL COMPLY WITH THE REQUIREMENTS OF CBC 904.5 AND C.B.C. STANDARD 9–2.
16. FIRE HYDRANTS ARE PRIVATE AND REQUIRE ON–SITE FIELD INSPECTIONS. FIRE HYDRANTS SHALL COMPLY WITH FIRE DEPARTMENT REQUIREMENTS FOR ON–SITE FIRE HYDRANTS. (U.F.C. SECTION 903.4)
17. THE LOCATION OF AUTOMATIC FIRE SPRINKLERS AND ALL RELATED EQUIPMENT AS SHOWN ON THE PLANS ARE FOR REFERENCE ONLY AND DO NOT CONSTITUTE SHOP DRAWINGS WHICH ARE REQUIRED FOR REVIEW AND APPROVAL.
18. THE LOCATION OF THE AUTOMATIC FIRE ALARM SYSTEM DETECTORS, MANUAL STATIONS, AUDIBLE DEVICES, AND RELATED EQUIPMENT AS SHOWN ON THE PLANS ARE FOR REFERENCE ONLY AND DO NOT CONSTITUTE SHOP DRAWINGS WHICH ARE REQUIRED FOR REVIEW AND APPROVAL.
19. FIRE DAMPERS AND COMBINATION FIRE/ SMOKE DAMPERS SHALL BE PROVIDED AS REQUIRED BY C.B.C. SECTION 713.10.

E. ENERGY STANDARDS

ENERGY CONSERVATION STANDARDS
PROVISIONS APPLICABLE TO ALL OCCUPANCIES

1. INSTALLATION OF CERTIFIED INSULATING MATERIAL:

   a. INSULATING MATERIAL OF THE TYPES LISTED IN TABLE 2–53D SHALL BE INSTALLED IN ANY BUILDING ONLY IF THE INSULATING MATERIAL HAS BEEN CERTIFIED BY THE MANUFACTURER TO COMPLY WITH THE CALIFORNIA QUALITY STANDARDS FOR INSULATING MATERIAL. SEE APPENDIX 2–53A FOR AVAILABILITY OF DIRECTORIES OF CERTIFIED INSULATING MATERIAL.

TABLE 2-53D:
INSULATING MATERIAL SUBJECT TO REGULATION

TYPE	FORM
ALUMINUM FOIL	REFLECTIVE FOIL
CELLULAR GLASS	BOARD FORM
CELLULOSE FIBER	LOOSE FILL AND SPRAY APPLIED
MINERAL AGGREGATE	BOARD FOAM
MINERAL FIBER	BLANKETS, BOARD FORM, LOOSE FILL
PERLITE	LOOSE FILL
POLYSTYRENE	BOARD FORM, MOLDED, EXTRUDED
POLYURETHANE	BOARD FORM AND FIELD APPLIED
POLYISOCYANURATE	BOARD FORM AND FIELD APPLIED
UREA FORMALDEHYDE FOAM	FIELD APPLIED
VERMICULITE	LOOSE FILL

   b. ALL INSULATING MATERIALS SHALL BE INSTALLED IN COMPLIANCE WITH THE FLAME–SPREAD RATING AND SMOKE DENSITY REQUIREMENTS OF SECTION 2602 OF THE CALIFORNIA BUILDING CODE.

2. SECTION 2–5317 – INFILTRATION/EXFILFILTRATION CONTROLS: [RECODIFIES, WITH AMENDMENTS, CURRENT SS 2–4324, 2–5352(d)(1)–(3), 2–5362(d)(1)].

   a. DOORS AND WINDOWS BETWEEN CONDITIONED AND UNCONDITIONED SPACES, SUCH AS EXTERIOR AREAS, STAIRWELLS, SERVICE AREAS AND TRASH ROOMS SHALL BE DESIGNED TO LIMIT AIR LEAKAGE INTO OR FROM THE BUILDING ENVELOPE.

   b. MANUFACTURED DOORS AND WINDOWS SHALL HAVE AIR INFILTRATION RATES CERTIFIED BY THE MANUFACTURER AS NOT EXCEEDING THOSE SHOWN IN TABLE 2–53J. LABELS INDICATING TESTING AND COMPLIANCE WITH INDUSTRY STANDARDS ARE ADEQUATE DEMONSTRATION AND CERTIFICATION OF COMPLIANCE WITH THIS SUBSECTION, 2–5317(b).

   c. SITE–CONSTRUCTION DOORS AND WINDOWS, EXTERIOR JOINTS, AND OPENINGS IN THE BUILDING ENVELOPE THAT ARE OBSERVABLE SOURCES OF AIR LEAKAGE SHALL BE CAULKED, GASKETED, WEATHER–STRIPPED OR OTHERWISE SEALED.

   EXCEPTIONS:

   1. FIRE–RATED DOORS AND WINDOWS, AND UNFRAMED GLASS DOORS DO NOT HAVE TO MEET THE REQUIREMENTS OF THIS SECTION.

NONRESIDENTIAL ENERGY STANDARDS COMPLIANCE (TITLE 24, PART 6,CH.1)

ENVELOPE MANDATORY MEASURES

INSTALLED INSULATING MATERIAL SHALL HAVE BEEN CERTIFIED BY THE MANUFACTURER TO COMPLY WITH THE CALIFORNIA QUALITY STANDARDS OF INSULATING MATERIAL.

ALL INSULATED MATERIALS SHALL BE INSTALLED IN COMPLIANCE WITH THE FLAME SPREAD RATING AND SMOKE DENSITY REQUIREMENTS OF SECTION 2602 OF THE UBC.

ALL EXTERIOR JOINTS AND OPENINGS IN THE BUILDING ENVELOPE THAT ARE OBSERVABLE SOURCES OF AIR LEAKAGE SHALL BE CAULKED, GASKETED, WEATHERSTRIPPED OR OTHERWISE SEALED.

SITE CONSTRUCTED DOORS, WINDOWS AND SKYLIGHTS SHALL BE CAULKED BETWEEN THE UNIT AND THE BUILDING AND SHALL BE WEATHERSTRIPPED(EXCEPT FOR UNFRAMED GLASS DOORS AND FIRE DOORS).

MANUFACTURED DOORS AND WINDOWS INSTALLED SHALL HAVE AIR INFILTRATION RATES CERTIFIED BY THE MANUFACTURER PER 2–5316(a)1. AFTER JULY 1, 1993, MANUFACTURED FENESTRATION PRODUCTS MUST BE LABELED FOR U–VALUE ACCORDING TO NFRC PROCEDURES.

□ DEMISING WALL INSULATION SHALL BE INSTALLED IN ALL OPAQUE PORTIONS OF FRAMED WALLS (EXCEPT DOORS).

TABLE 2–53J: NON–RESIDENTIAL DOORS

ALLOWABLE AIR INFILTRATION RATES 1.2 (cfm/sq.ft of door area)

	(cfm/ft of operable sash crack)		
	swinging, sliding	swinging, sliding (single door)	sliding (double door)
0.50	0.50	0.50	1.0

NOTES:

1. WHEN TESTED AT A PRESSURE DIFFERENTIAL OF 1.567 LB/SQ. FT. WHICH IS EQUIVALENT TO THE PRESSURE OF A 25 MPH WIND.
2. COMPLIANCE WITH THE CRITERIA FOR AIR LEAKAGE SHALL BE DETERMINED BY SPECIFICATION E–283–73 OF ASTM (STANDARD METHOD OF TEST FOR AIR LEAKAGE THROUGH EXTERIOR WINDOWS, CURTAIN WALLS AND DOORS).
3. ALL INTERIOR/EXTERIOR DOORS AND WINDOWS TO BE CAULKED, WEATHERSTRIPPED AND SEALED FOR AN AIRTIGHT FIT.
4. OPENINGS TO BE CAULKED AND SEALED (I.E., AROUND JOINTS IN WINDOWS, WALL SOLE PLATES, OPENINGS FOR UTILITY PIPING AND WIRING, ETC.)
5. MANUFACTURED DOORS AND WINDOWS TO MEET APPLICABLE ANSI OR NWMA STANDARDS AND BE SO LABELED.
6. MATERIALS EXPOSED WITHIN DUCT OR PLENUM SHALL COMPLY WITH SECTION 601.3 C.M.C.
7. DOORS AND WINDOWS SHALL MEET THE MINIMUM INFILTRATION REQUIREMENTS PER SECTION 116E.E.5

CARRIER JOHNSON
ARCHITECTURE
INTERIOR DESIGN
PLANNING

GORDON R. CARRIER AIA
MICHAEL C. JOHNSON AIA

WILLIAM C. BOCKEN AIA
DEBORAH P. ELLIOTT IIDA

2600 MICHELSON DRIVE
SUITE 400
IRVINE, CALIFORNIA
92612
TEL 949 955-2353
FAX 949 955-2377

1301 THIRD AVENUE
SAN DIEGO, CALIFORNIA
92101
TEL 619 239-2353
FAX 619 239-6227

RECORD DOCUMENTS
THESE DOCUMENTS RELEASED BY CARRIER JOHNSON FOR USE AS RECORD DOCUMENTS WILL SHOW THE REPORTED LOCATION OF THE WORK AND SIGNIFICANT CHANGES MADE DURING THE CONSTRICTION PROCESS, AND ARE BASED ON UNVERIFIED INFORMATION PROVIDED BY THE CONTRACTOR AND OTHER PARTIES WHICH WILL BE ASSUMED RELIABLE. CARRIER JOHNSON CANNOT AND DOES NOT WARRANT THE ACCURACY AND/OR COMPLETENESS OF THIS INFORMATION AND SHALL NOT BE RESPONSIBLE FOR ANY ERRORS OR OMISSIONS WHICH MAY BE INCORPORATED THEREIN AS A RESULT. FUTURE CONSTRUCTION PLANNING MUST INCLUDE FIELD CONFIRMATION OF EXISTING CONDITIONS.

ONTARIO PD::
TEMPORARY HOLDING AREA
2534 S. ARCHIBALD AVE., ONTARIO, CALIFORNIA 91761

B.O.C.
Re-Submittal 07.30.03
F13 Field Order #13
07.01.03
F9 Bldg. Dept./B.O.C.
Re-Submittal 06.06.2003

ISSUES:
DIRECTORY/FILE NUMBER: 4511.00
4511A03
XREF'S DRAWINGS:
PROJECT NUMBER:
4511.00
DRAWN BY: CHECKED BY:
DATE:
1/23/03
SCALE:
TITLE:
GENERAL NOTES
DRAWING NO:
A0.3

WITH THIS PROJECT. NONE OF SUCH IDEAS, DESIGN, ARRANGEMENTS, OR PLANS SHALL BE USED BY, OR DISCLOSED TO ANY PERSON, FIRM, OR CORPORATION FOR ANY PURPOSE WHATSOEVER WITHOUT THE WRITTEN PERMISSION OF CARRIER JOHNSON. FILING THESE DRAWINGS OR SPECIFICATIONS WITH ANY PUBLIC AGENCY IS NOT A PUBLICATION OF SAME. NO COPYING, REPRODUCTION OR USE THEREOF IS PERMISSIBLE WITHOUT THE CONSENT OF CARRIER JOHNSON.

WITH THIS PROJECT. NONE OF SUCH IDEAS, DESIGN, ARRANGEMENTS, OR PLANS SHALL BE USED BY, OR DISCLOSED TO ANY PERSON, FIRM, OR CORPORATION FOR ANY PURPOSE WHATSOEVER WITHOUT THE WRITTEN PERMISSION OF CARRIER JOHNSON. FILING THESE DRAWINGS OR SPECIFICATIONS WITH ANY PUBLIC AGENCY IS NOT A PUBLICATION OF SAME. NO COPYING, REPRODUCTION OR USE THEREOF IS PERMISSIBLE WITHOUT THE CONSENT OF CARRIER JOHNSON.

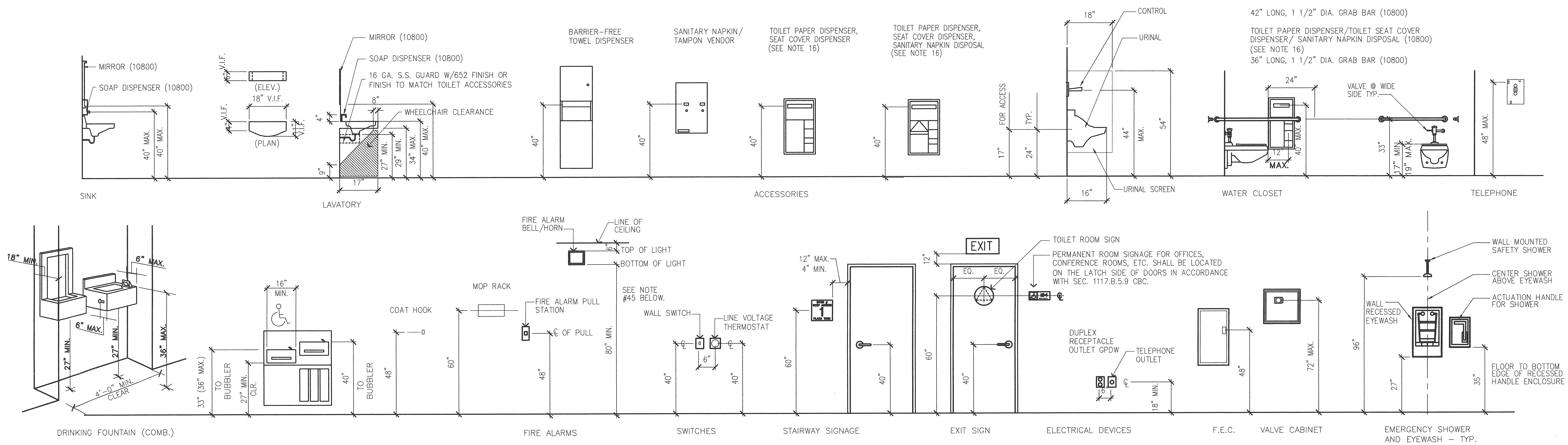

NOTE: ACCESSORIES TYPE – SEE SPECS.

Accessibility Signage

SANITARY FACILITIES (GENERAL)

1. On doorways leading to men's sanitary facilities, an equilateral triangle 1/4 inch thick with edges 12-inches long and a vertex pointing upward shall be provided and on doorways leading to women's sanitary facilities a circle 1/4 inch thick and 12-inches in diameter shall be provided. These geometric symbols shall be centered on the door at a height of 60-inches and their color and contrast shall be distinctly different from the color and contrast of the door.

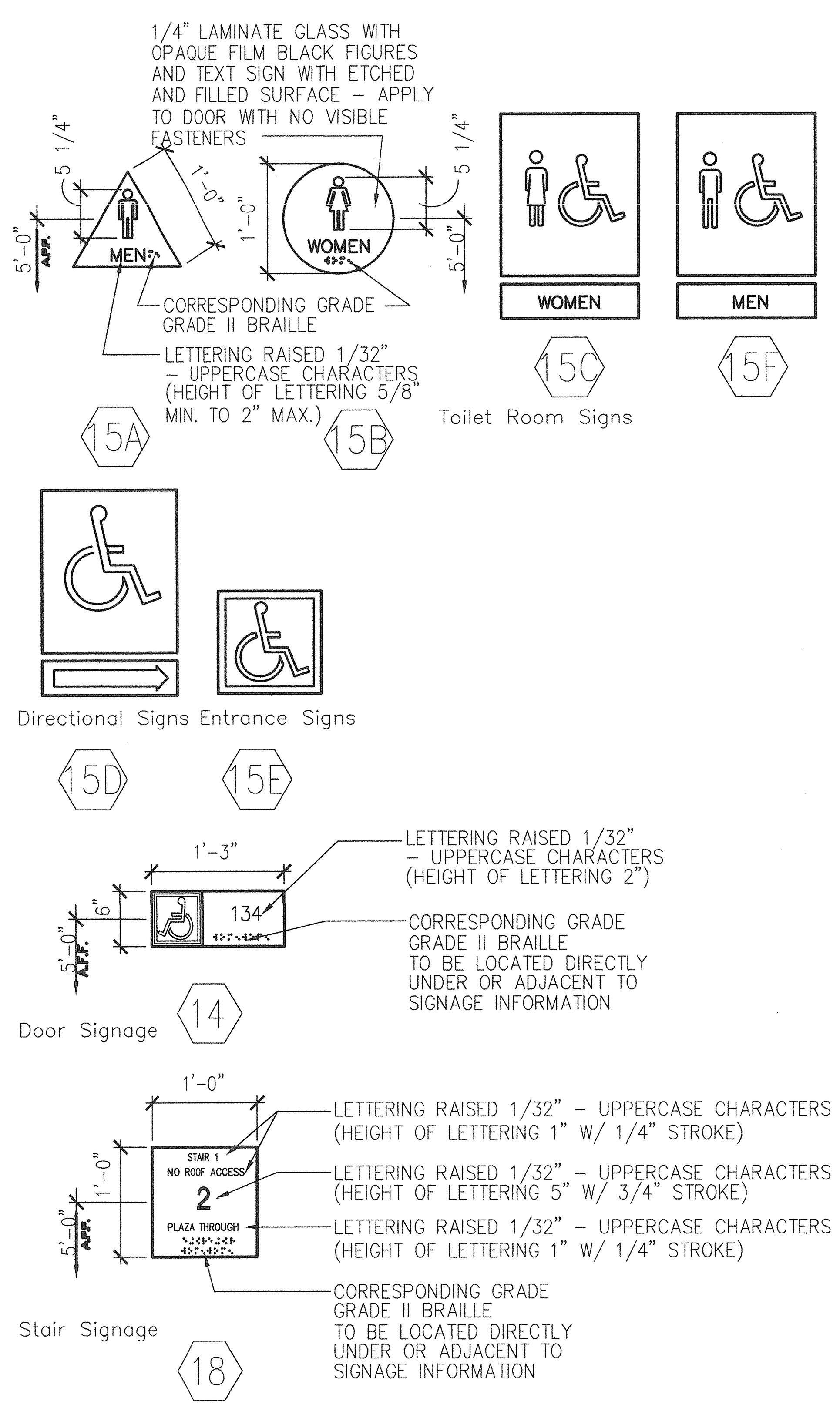

Accessibility Notes

ENTRANCES

2. Latching and locking doors that are hand activated and which are in a path of travel, shall be operable with a single effort by lever type hardware, panic bars, push-pull activating bars, or other hardware designed to provide passage without requiring the ability to grasp the opening hardware.

3. The floor or landing shall be not more than 1/2-inch lower than the threshold of the doorway. change in level between 1/4-inch and 1/2-inch shall be beveled with a slope no greater than 1:2.

4. The bottom 10-inches of all doors except automatic and sliding shall have a smooth uninterrupted surface to allow the door to be opened by a wheelchair footrest without creating a trap or hazardous condition. Where narrow frame doors are used, a 10-inch high smooth panel shall be installed on the push side of the door, which will allow the door to be opened by a wheelchair footrest without creating a trap or hazardous condition.

5. Maximum effort to operate doors shall not exceed 8-1/2 lbs for exterior doors and 5 lbs for interior doors, Such pull or push effort being applied at right angles to hinged doors and at the center plane of sliding or folding doors. Compensating devices or automatic door operators may be utilized to the above standards. When fire doors are required, the maximum effort to operate the door may be increased not to exceed 15 lbs.

FLOORS AND LEVELS

6. In building and facilities, floors of a given story shall be a common level throughout, or shall be connected by pedestrian ramps, passenger elevators or special access lifts.

TOILET ROOM FIXTURES AND ACCESSORIES

7. All toilet fixtures and accessories shall comply with the Campus Standards and Design Criteria Manual.

8. The height of accessible water closets shall be a minimum of 17 inches and a maximum of 19 inches measured to the top of the toilet seat. Provide 18-inches from the centerline of the water closets and lavs to the adjacent walls.

9. Toilet flush controls shall be operable with one hand, and shall not require tight grasping, pinching or twisting of the wrist. Controls for the flush valves shall be mounted on the wide side of the toilet areas, no more than 44-inches above the floor. The force required to activate controls shall be no greater than 5 pounds.

10. Lavatories shall be mounted with a clearance of at least 29-inches from the floor to the bottom of the apron with knee clearance under the front lip extending a minimum of 30-inches in width with 8-inches minimum depth at the top. Toe clearance shall be the same width and shall be a minimum of 9-inches high from the floor and a minimum of 17-inches deep from the front of the lavatory.

11. A projection of a lavatory bowl into the 8-inch clear space, thereby reducing the clear height below the lavatory to no less than 27-inches at 8-inches back from the apron, meets the requirement for providing knee clearance. A maximum height of 34-inches to the top of the lavatory is recommended.

12. Hot water and drain pipes under lavatories shall be insulated or otherwise covered. There shall be no sharp or abrasive surfaces under lavatories.

13. Faucet controls and operating mechanisms shall be operable with one hand and shall not require tight grasping, pinching or twisting of the wrist. The force required to activate controls shall be no greater than 5 lbs. Lever-operated, push-type and electronically controlled mechanisms are examples of acceptable designs. Self-closing valves are allowed if the faucet remains open for at least 10 seconds.

14. Mirrors shall be mounted with the bottom edge not more than 40" from the floor.

15. Locate towel, sanitary napkin, and waste receptacles with all operable parts not more than 40-inches from the floor.

16. Locate toilet tissue dispensers on the wall within 12 inches of the front edge of the toilet seat. For accessible stalls, limit the projection of the surface or semi-surface mounted accessory from encroaching more than three inches from the face of the wall or partition, and no closer than one and one-half inches to the tangent point of the grab bar.

17. Grab bars, tub and shower seats, fasteners and mounting devices shall be designed for 250 lb. per linear ft. load.

GRAB BARS

18. Grab bars shall be located on each side, or one side and the back of the physically disabled toilet stall or compartment and shall be securely attached 33 inches above and parallel to the floor.

19. Grab bars at the side shall be at least 42-inches long with the front end positioned 24-inches in front of the water closet stool, and grab bars at the back shall be not less than than 36 inches long.

20. The diameter or width of the gripping surfaces of a grab bar shall be 1-1/4 inches to 1-1/2 inches or the shape shall proved an equivalent gripping surface.

21. If the grab bars are mounted adjacent to a wall, the space between the wall and the grab bars shall be 1-1/2 inches.

22. A grab bar and any wall or other surface adjacent to it shall be free of any sharp or abrasive elements.

23. Grab bars shall not rotate within their fittings.

24. Edges shall a have minimum radius of 1/8-inch.

ADDITIONAL REQUIREMENTS

25. The center of receptacle outlets shall be not less than 15 inches above the floor or working platform.

26. The center of the grip of the operating handle of switches intended to be used by the occupant of the room or area to control lighting and receptacle outlets, appliances, or cooling, heating and ventilating equipment shall be not less than 3 feet nor more than 4 feet above the floor or working platform.

27. The center of fire alarm initiating devices (boxes) shall be located 48 inches above the level of the floor, working platform, ground surface or sidewalk.

28. The International Symbol of Accessibility shall be the standard used to identify facilities that are accessible to and usable by physically disabled persons as set forth in these building standards. The symbol specified above shall consist of a white figure on a blue background. The blue shall be equal to Color No. 15090 in Federal Standard 595b.

29. If emergency warning systems are required they shall activate a means of warning the hearing impaired. Flashing visual warning shall have a frequency of not more than 60 flashes per minute.

30. Permanent Room Signage: (1998 CBC)
Raised characters and pictorial symbol signs. When raised characters or symbols are used, they shall conform to the following:

A. Letter type. Letters and numbers on signs shall be raised 1/32 inch minimum and shall be sans-serif upper case characters accompanied by Grade 2 Braille.

B. Symbol size. Raised characters or symbols shall be a minimum of 5/8 inch high.

C. Pictorial symbol signs (pictograms). Pictorial symbol signs (pictograms) shall be accompanied by the equivalent verbal description placed directly below the pictogram. The border dimension of the pictogram shall be a minimum of 6 inches in height.

D. Braille Symbols– Contracted grade 2 braille shall be used wherever Braille symbols are specifically required in other portions of these standards. Dots shall be 1/10 inch (25.4mm) on centers in each cell with 2/10 inch (5.08 mm) space between cells. Dots shall be raised a minimum of 1/40 inch (0.0635 mm) above the background, per Section 1117B.5.2

Mounting location and height. Where permanent identification is provided for rooms and spaces, raised letters shall be accompanied by Braille in conformance with Section 1117B.5.6. Signs shall be installed on the wall adjacent to the latch outside the door. Where there is no wall space on the latch side, including at double leaf doors, signs shall be placed on the nearest adjacent wall, preferably on the right. Mounting height shall be 60 inches above the finish floor to the center line of the sign. Mounting location shall be determined so that a person may approach within 3 inches of signage without encountering protruding objects or standing within the swing of a door.

Note: See also Section 1117B.5. for additional signage applicable to sanitary facilities.

Height of work surfaces: The tops of tables and counters shall be 28 inches to 34 inches from the floor or ground.

Where a single counter contains more than one transaction station, such as (but not limited to) a bank counter with multiple teller windows or a retail sales counter with multiple cash register stations, at least 5 percent, but never less than one, of each type of station shall be located at a section of counter that is at least 36 inches long and no more than 28 to 34 inches high.

GROUND AND FLOOR SURFACES

31. General. Ground and floor surfaces along accessible routes and in accessible rooms and spaces, including floors, walks, ramps stairs, and curb ramps, shall be stable, firm and slip resistant, and shall comply with this section.

32. For changes in level up to 1/4 inch (6mm) vertical and without edge treatment, see Figure No. 11B-5E(c). Changes in level between 1/4 inch and 1/2 inch shall be accomplished by means of a ramp that complies with Fig. No. No. 11B-5E (d).

33. If carpet or carpet tile is used on a ground or floor surface, than it shall be securely attached; have a firm cushion, pad or backing or no cushion or pad; and have a level loop, textured loop, level-cut pile, or level-cut / uncut pile texture. The maximum pile height shall be 1/2 inch. Exposed edges of carpet shall be fastened to floor surfaces and have trim along the entire length of the exposed edge. Carpet edge trim shall comply with section 1124B.3.

34. Hand-activated door hardware shall be centered between 30 inches (762 mm) and 44" (1118 mm) above the floor. Latching and locking doors that are hand-activated and which are in a path of travel shall be operable with a single effort by lever-type hardware, panic bars, push-pull activating bars, or other hardware designed to provide passage without requiring the ability to grasp the opening hardware. Locked exit doors shall operate as shown in egress direction, per Section 1133B.2.5.1 Note exit doors shall be openable from the inside wihout the use of key or any special knowledge or effort.

35. The floor landing shall not be more than 1/2 inch (13 mm) lower than the threshold of the doorway. Change in level between 1/4 inch (6.4 mm) and 1/2 inch (13 mm) shall be beveled with a slope no greater than 1 unit vertical in 2 units horizontal (50 percent slope). Change in level greater than 1/2 inch (13 mm) shall be accomplished by means of a ramp, per Section 1133B.2.4.1

36. Minimum maneuvering clearances at doors shall be as shown in figure 10-2. The floor or ground area within the required clearances shall be level and clear.

37. The level area shall have a length in the direction of door swing of at least 60 inches (1564 mm) and the length opposite the direction of door swing of 48 inches (1219 mm) as measured at right angles to the door in its closed position, per Section 1133B.2.4.2 and Fig.11B-26A

38. The width of level area on the side to which the door swings shall extend 24 inches (610 mm) past the strikes edge of the door for exterior doors and 18 inches (457 mm) past the strike edge for interior doors, per Section 1133B.24.3 and fig. 11B-26A.

39. It is hearby understood that the facility must maintain its regular services, including all exits, during the time this work is in progress.

STROBE LIGHTS

40. The lamp shall be a xenon strobe type or equivalent.

41. The color shall be clear or normal white (i.e. unfiltered or clear filtered white light).

42. The maximum pulse duration shall be two-tenths of one second (0.2 sec) with a maximum duty cycle of 40 percent. The pulse duration is defined as the time interval between initial and final points of 10 percent of maximum signal.

43. Simplex strobe are 15cd, 30cd, and 110cd. 15cd should be in corridors and room 20'x20'. Refer to NFPA 72 for candula rating.

44. The flash rate shall be a minimum of 1 Hz and a maximum of 3 Hz.

45. The appliance shall be placed 80 inches above the highest floor level within the space or 6 inches below the ceiling, whichever is lower. Contractor shall cordinate with architect on location and color of back plate (typically white).

46. In general, no place in any room or space required to have a visual signal appliance shall be more than 50 feet from the signal (in the horizontal plane). In large rooms and spaces exceeding 100 feet across, without obstructions 6 feet above the finish floor, such as auditoriums, devices may be placed around the perimeter, spaced at a maximum 100 feet apart.

ARCHITECTURE
INTERIOR DESIGN
PLANNING

CARRIER JOHNSON

GORDON R. CARRIER AIA
MICHAEL C. JOHNSON AIA

WILLIAM C. BOCKEN AIA
DEBORAH P. ELLIOTT IIDA

2600 MICHELSON DRIVE
SUITE 400
IRVINE, CALIFORNIA
92612

TEL 949 955-2353
FAX 949 955-2377

1301 THIRD AVENUE
SAN DIEGO, CALIFORNIA
92101

TEL 619 239-2353
FAX 619 239-6227

RECORD DOCUMENTS

THESE DOCUMENTS RELEASED BY CARRIER JOHNSON FOR USE AS RECORD DOCUMENTS WILL SHOW THE REPORTED LOCATION OF THE WORK AND SIGNIFICANT CHANGES MADE DURING THE CONSTRICTION PROCESS, AND ARE BASED ON UNVERIFIED INFORMATION PROVIDED BY THE CONTRACTOR AND OTHER PARTIES WHICH WILL BE ASSUMED RELIABLE. CARRIER JOHNSON CANNOT AND DOES NOT WARRANT THE ACCURACY AND/OR COMPLETENESS OF THIS INFORMATION AND SHALL NOT BE RESPONSIBLE FOR ANY ERRORS OR OMISSIONS WHICH MAY BE INCORPORATED THEREIN AS A RESULT. FUTURE CONSTRUCTION PLANNING MUST INCLUDE FIELD CONFIRMATION OF EXISTING CONDITIONS.

ONTARIO PD::
TEMPORARY HOLDING AREA

2534 S. ARCHIBALD AVE., ONTARIO, CALIFORNIA 91761

B.O.C.
Re-Submittal 07.30.03

F13 Field Order #13
07.01.03

F9 Bldg. Dept./B.O.C.
Re-Submittal 06.06.2003

ISSUES:

DIRECTORY/FILE NUMBER: 4511.00
4511-A04

XREF'S DRAWINGS:

PROJECT NUMBER:
4511.00

DRAWN BY: CHECKED BY:

DATE:
1/23/03

SCALE:

TITLE:
MOUNTING HEIGHTS AND ACCESSORIES

DRAWING NO:
A0.4

THESE DRAWINGS ARE THE PROPERTY OF CARRIER JOHNSON AND MAY NOT BE REPRODUCED OR USED IN ANY MANNER WHATSOEVER WITHOUT THE EXPRESS WRITTEN CONSENT OF CARRIER JOHNSON. ANY UNAUTHORIZED USE, REPRODUCTION OR DISTRIBUTION OF THESE DRAWINGS IS STRICTLY PROHIBITED. VISUAL CONTACT WITH THESE DRAWINGS OR SPECIFICATIONS SHALL CONSTITUTE PRIMA FACIE EVIDENCE OF ACCEPTANCE OF THESE RESTRICTIONS. THE SALE, DISPOSITION OR USE THEREOF IS PERMISSIBLE WITHOUT THE CONSENT OF CARRIER JOHNSON. FILING THESE DRAWINGS OR SPECIFICATIONS WITH ANY PUBLIC AGENCY IS NOT A PUBLICATION OF SAME. NO COPYING, REPRODUCTION OR USE THEREOF IS PERMISSIBLE WITHOUT THE CONSENT OF CARRIER JOHNSON.

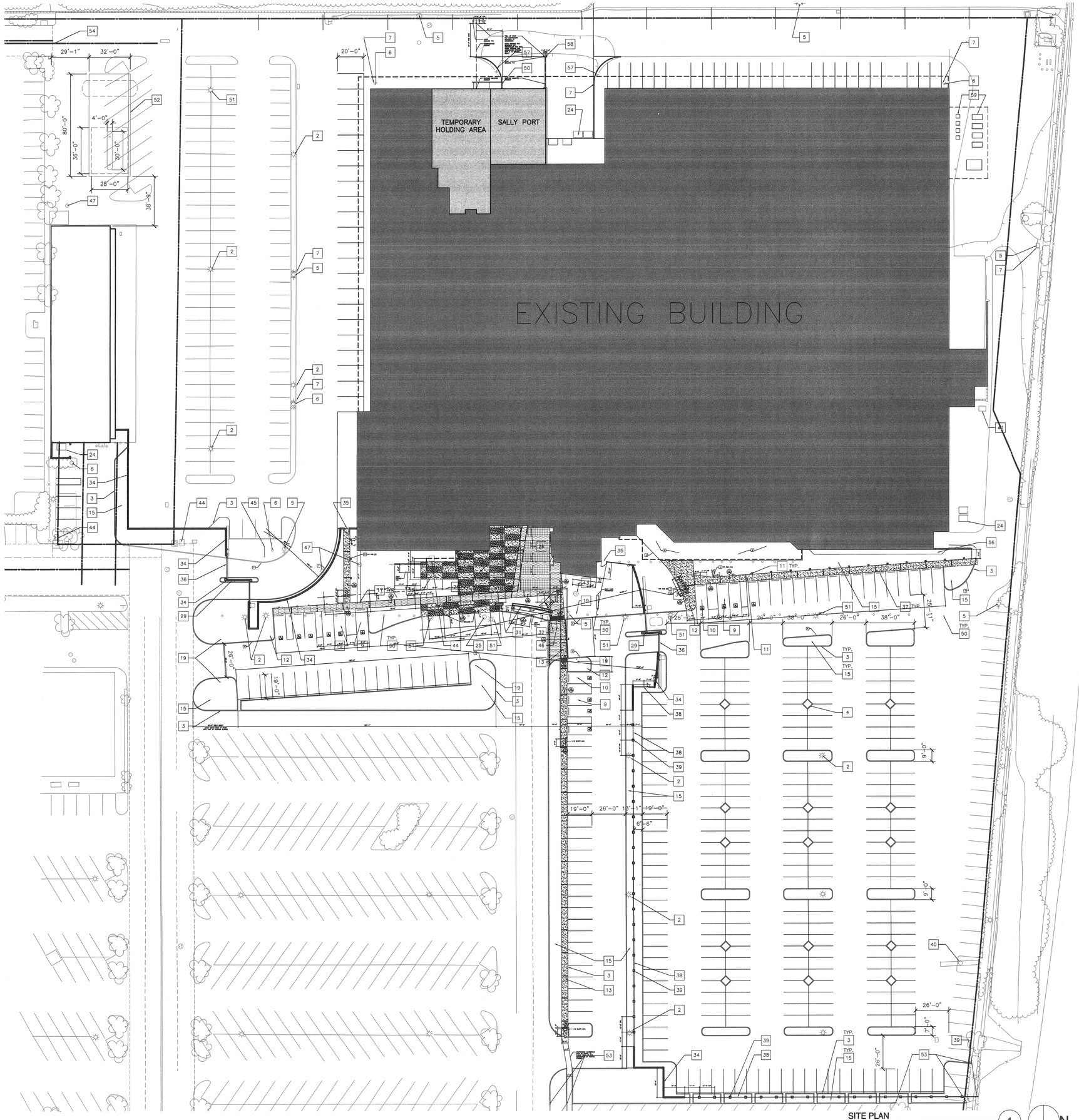

SITE PLAN
1"=30'

1

N

SITE PLAN KEY NOTES

1. NEW LIGHT POLE PER ELECTRICAL
2. EXISTING LIGHT POLE TO REMAIN
3. NEW CONCRETE CURB
4. NEW CONCRETE CURB CUT
5. EXISTING FIRE HYDRANT TO REMAIN, PROVIDE MARKERS (BLUE DOTS) PER ONTARIO FIRE DEPARTMENT REQUIREMENTS
6. EXISTING FIRE CONTROL VALVE TO REMAIN
7. EXISTING STEEL PIPE BOLLARDS TO REMAIN
8. ACCESIBLE PATH OF TRAVEL
9. ACCESSIBLE PARKING SPACE
10. VAN ACCESSIBLE PARKING SPACE
11. ACCESSIBLE PARKING SIGNAGE (3 / A-1.0.3)
12. ACCESSIBILITY SIGNAGE (5 / A-1.0.3)
13. CONCRETE PAVING PER PAVING PLANS
14. ASPHALT PAVING PER CIVIL
15. PLANTER AREA PER LANDSCAPE
16. DETECTABLE WARNING SURFACE CONSISTING OF RAISED TRUNCATED DOMES
17. CONCRETE SEAT WALL
18. NEW CONCRETE SLAB AT SALLYPORT
19. FIRE LANE SIGNAGE (2 / A-1.0.3)
20. PAINTEDRED CURB PER ONTARIO FIRE DEPARTMENT STANDARDS
21. PUBLIC TELEPHONE
22. TRASH ENCLOSURE
23. CONCRETE APRON IN FRONT OF TRASH ENCLOSURE
24. TRASH AND RECYCLE BINS PROVIDED BY OTHERS
25. EXISTING FLAGPOLE TO BE RELOCATED
26. RELOCATED FLAG POLE
27. PAINTED STEEL RAIL
28. KNOX BOX
29. KNOX KEY SWITCH
30. SPACE FOR UNIVERSITY SUPPLIED AND INSTALLED SPOTTING RIG.
31. ENTRY SIGN WALL
32. RELOCATED MONUMENT
33. NOT USED
34. CMU SITE WALL
35. PAINTED STEEL AND ACRYLIC PANEL GATE
36. PAINTED STEEL AND ACRYLIC PANEL ROLLING GATES TO MATCH HEIGHT OF ADJACENT WALL
37. WHEEL-STOP SEE DET (12 / A1.0.3)
38. PAINTED STEEL ENCLOSURE FENCE
39. CMU PILASTER
40. EXISTING MONUMENT SIGN TO REMAIN
41. EXISTING TRANSFORMER TO REMAIN
42. EXISTING UTILITY METER TO REMAIN
43. EXISTING UTILITY MANHOLE TO REMAIN
44. EXISTING UTILITY VAULT TO REMAIN
45. EXISTING BACKFLOW PREVENTER TO REMAIN
46. EXISTING BACKFLOW PREVENTER TO BE RELOCATED
47. EXISTING UTILITY VALVE TO REMAIN
48. EXISTING UTILITY VALVE TO BE RELOCATED
49. EXISTING CHAIN LINK FENCING TO BE REMOVED
50. EXISTING STEEL PIPE BOLLARD OR ACCESSIBILITY SIGNAGE TO BE REMOVED
51. EXISTING LIGHT POLE TO BE REMOVED
52. FUELING STATION BY OTHERS
53. TIE NEW CURB INTO EXISTING CURB
54. EXISTING GATES TO REMAIN
55. NEW CANOPY
56. EXISTING PLANTER TO REMAIN
57. EXISTING PIPE RAIL TO REMAIN
58. NEW WALL AND STEEL BOLLARD PER CIVIL
59. CONCRETE EQUIPMENT PADS (16 / A1.0.3)

GENERAL NOTES

1. PATH OF TRAVEL (P.O.T) AS INDICATED IS A BARRIER FREE ACCESS WITHOUT ANY ABRUPT VERTICAL CHANGES EXCEEDING 1/2" AT 1:2 MAX. SLOPE, EXCEPT THAT LEVEL CHANGES DO NOT EXCEED 1/4" VERTICAL MAX. CROSS-SLOPE 2% TYPICAL. THE CONTRACTOR SHALL VERIFY THAT ALL BARRIERS ON THE INDICATED P.O.T. HAVE BEEN REMOVED. SEE CIVIL DWGS FOR ADDITIONAL INFO.
2. PROVIDE H.C.A. SIGNAGE ALONG P.O.T. AT MAJOR JUNCTIONS.
3. ALL RAMPS TO HAVE MEDIUM BROOM FINISH, TYP.
4. COORDINATE DIMENSIONAL LAYOUT POINTS WITH CIVIL DRAWINGS.

ARCHITECTURE
INTERIOR DESIGN
PLANNING

CARRIER JOHNSON

GORDON R. CARRIER AIA
MICHAEL C. JOHNSON AIA

WILLIAM C. BOCKEN AIA
DEBORAH F. ELLIOTT IIDA

2600 MICHELSON DRIVE
SUITE 400
IRVINE, CALIFORNIA
92612

TEL 949 955-2353
FAX 949 955-2377

1301 THIRD AVENUE
SAN DIEGO, CALIFORNIA
92101

TEL 619 239-2353
FAX 619 239-6227

RECORD DOCUMENTS
THESE DOCUMENTS RELEASED BY CARRIER JOHNSON FOR USE AS RECORD DOCUMENTS REFLECT KNOWN CHANGES IN LOCATION OF THE WORK AND SIGNIFICANT CHANGES MADE DURING THE CONSTRUCTION PROCESS, AND ARE BASED ON UNMARKED PRINTS FURNISHED BY CONTRACTOR, SUBCONTRACTORS AND OTHER PARTIES WHICH WILL BE ASSUMED RELIABLE. CARRIER JOHNSON CANNOT AND DOES NOT WARRANT THE COMPLETENESS OR ACCURACY OF THESE DRAWINGS AND SHALL NOT BE RESPONSIBLE FOR ANY ERRORS OR OMISSIONS WHICH MAY BE INCORPORATED THEREIN AS A RESULT. FUTURE CONSTRUCTION PLANNING MUST INCLUDE FIELD CONFIRMATION OF EXISTING CONDITIONS.

ONTARIO PD:: TEMPORARY HOLDING AREA

2534 S. ARCHIBALD AVE., ONTARIO, CALIFORNIA 91761

B.O.C.
Re-Submittal 07.30.03

Field Order #13
07.01.03

Bldg. Dept./B.O.C.
Re-Submittal 06.06.2003

ISSUES:

DIRECTORY/FILE NUMBER: 4511.00

XREF'S DRAWINGS:

PROJECT NUMBER:
4511.00

DRAWN BY: CHECKED BY:

DATE:
3/26/03

SCALE:
1"=30'

TITLE:
OVERALL
SITE PLAN

DRAWING NO:
A1.0.0

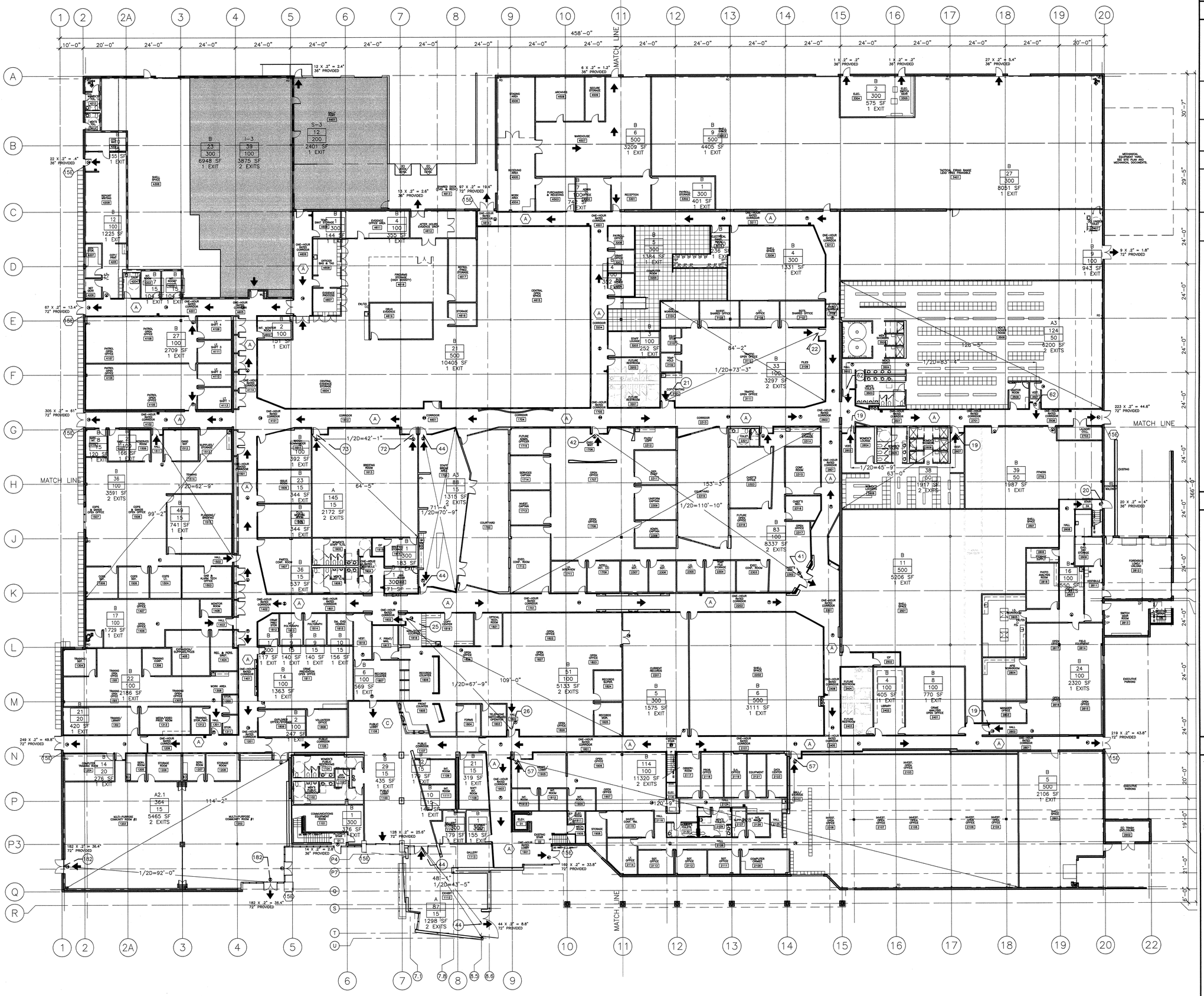

EGRESS LEGEND

SYMBOL	DESCRIPTION
OCCUP	OCCUPANCY
NO	NO. OF OCCUPANTS
LOAD	OCCUPANT LOAD FACTOR
SQFT	AREA (IN SQ. FT.)
EX	# OF EXIT REQUIRED
	1 HOUR WALL
	2 HOUR OCCUPANCY SEPARATION
	CMU WALL
	EXIT PATH
10	COLLECTIVE OCCUPANCY ALONG PATH OF TRAVEL
F.E.C.	FIRE EXTINGUISHER CABINETS
A	1-HOUR RATED EXIT CORRIDOR
B	2-HOUR OCCUPANCY SEPARATION
C	NON RATED
	EXIT LIGHTS VERIFY AND MODIFY EXIT LIGHTS ACCORDINGLY, FINAL REVIEW OF EXIT LIGHTS WILL BE IN THE FIELD.
15E	ACCESSIBLE ENTRANCE SIGNAGE REFER TO ALL SIGNAGE REQUIREMENTS ON SHEET A.0.4.

PLAN KEY NOTES 1

GENERAL NOTES

1. THE TOTAL WIDTH OF EXITS IN INCHES SHALL BE NO LESS THAN THE TOTAL OCCUPANT LOAD USED BY AN EXIT, MULTIPLIED BY 0.3 FOR STAIRWAYS AND 0.2 FOR OTHER EXITS. SUCH WIDTH OF EXITS SHALL BE DIVIDED APPROXIMATELY EQUALLY AMONG THE SEPARATE EXITS. THE MAXIMUM EXIT WIDTH REQUIRED FROM ANY STORY OF A BUILDING SHALL BE MAINTAINED. (U.B.C. SECTION 10032).
2. EXISTING BUILDING MULTI-RESTROOMS, STAIRS AND ELEVATORS ARE FULLY HANDICAP ACCESSIBLE. AND CURRENTLY UNDER CONTRACT FOR REMODEL. THIS WORK HAS BEEN PREVIOUSLY REVIEWED AND APPROVED BY THE CITY OF ONTARIO.
3. VERIFY RATING OF EXISTING WALLS TO REMAIN, UPDATE RATING AS REQUIRED.

CARRIER JOHNSON

ARCHITECTURE
INTERIOR DESIGN
PLANNING

GORDON R. CARRIER AIA
MICHAEL C. JOHNSON AIA

WILLIAM C. BOCKEN AIA
DEBORAH P. ELLIOTT IIDA

2600 MICHELSON DRIVE
SUITE 400
IRVINE, CALIFORNIA
92612

TEL 949 955-2353
FAX 949 955-2377

1301 THIRD AVENUE
SAN DIEGO, CALIFORNIA
92101

TEL 619 239-2353
FAX 619 239-6227

RECORD DOCUMENTS

THESE DOCUMENTS RELEASED BY CARRIER JOHNSON FOR USE AS RECORD DOCUMENTS WILL SHOW THE REPORTED LOCATION OF THE WORK AND SIGNIFICANT CHANGES MADE DURING THE CONSTRUCTION PROCESS, AND ARE BASED ON UNVERIFIED INFORMATION PROVIDED BY THE CONTRACTOR AND OTHER PARTIES WHICH WILL BE ASSUMED RELIABLE. CARRIER JOHNSON CANNOT AND DOES NOT WARRANT THE ACCURACY AND/OR COMPLETENESS OF THIS INFORMATION AND SHALL NOT BE RESPONSIBLE FOR ANY ERRORS OR OMISSIONS WHICH MAY BE INCORPORATED THEREIN AS A RESULT. FUTURE CONSTRUCTION PLANNING MUST INCLUDE FIELD CONFIRMATION OF EXISTING CONDITIONS.

ONTARIO PD:: TEMPORARY HOLDING AREA

2534 S. ARCHIBALD AVE., ONTARIO, CALIFORNIA 91761

B.O.C. Re-Submittal 07.30.03

P13 Field Order #13 07.01.03

P9 Bldg. Dept./B.O.C. Re-Submittal 06.06.2003

ISSUES:

DIRECTORY/FILE NUMBER: 4511-A101XH

XREF'S DRAWINGS:

PROJECT NUMBER: 4511.00

DRAWN BY: CHECKED BY:

DATE: 5/15/03

SCALE: 1/16" = 1'-0"

TITLE: FLOOR PLAN OVERALL KEY PLAN EXITING PLAN

DRAWING NO: A1.0.1XH

CARRIER JOHNSON. FILING THESE DRAWINGS OR SPECIFICATIONS WITH ANY PUBLIC AGENCY IS NOT A PUBLICATION OF SAME. NO COPYING, REPRODUCTION OR USE THEREOF IS PERMISSIBLE WITHOUT THE CONSENT OF CARRIER JOHNSON.

CARRIER JOHNSON, "FILING THESE DRAWINGS OR SPECIFICATIONS WITH ANY PUBLIC AGENCY IS NOT A PUBLICATION OF SAME. NO COPYING, REPRODUCTION OR USE THEREOF IS PERMISSIBLE WITHOUT THE CONSENT OF CARRIER JOHNSON.

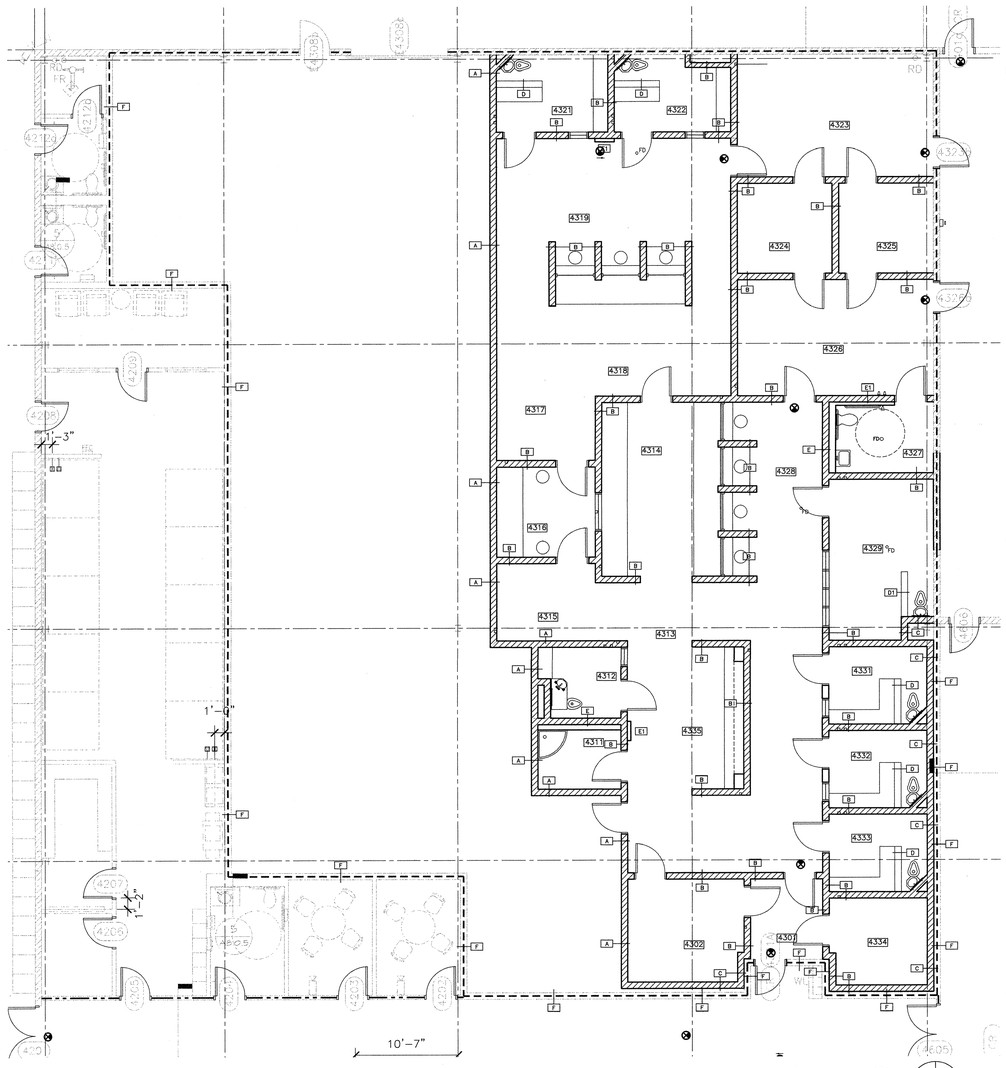

OVERALL WALL TYPE PLAN
NTS

2

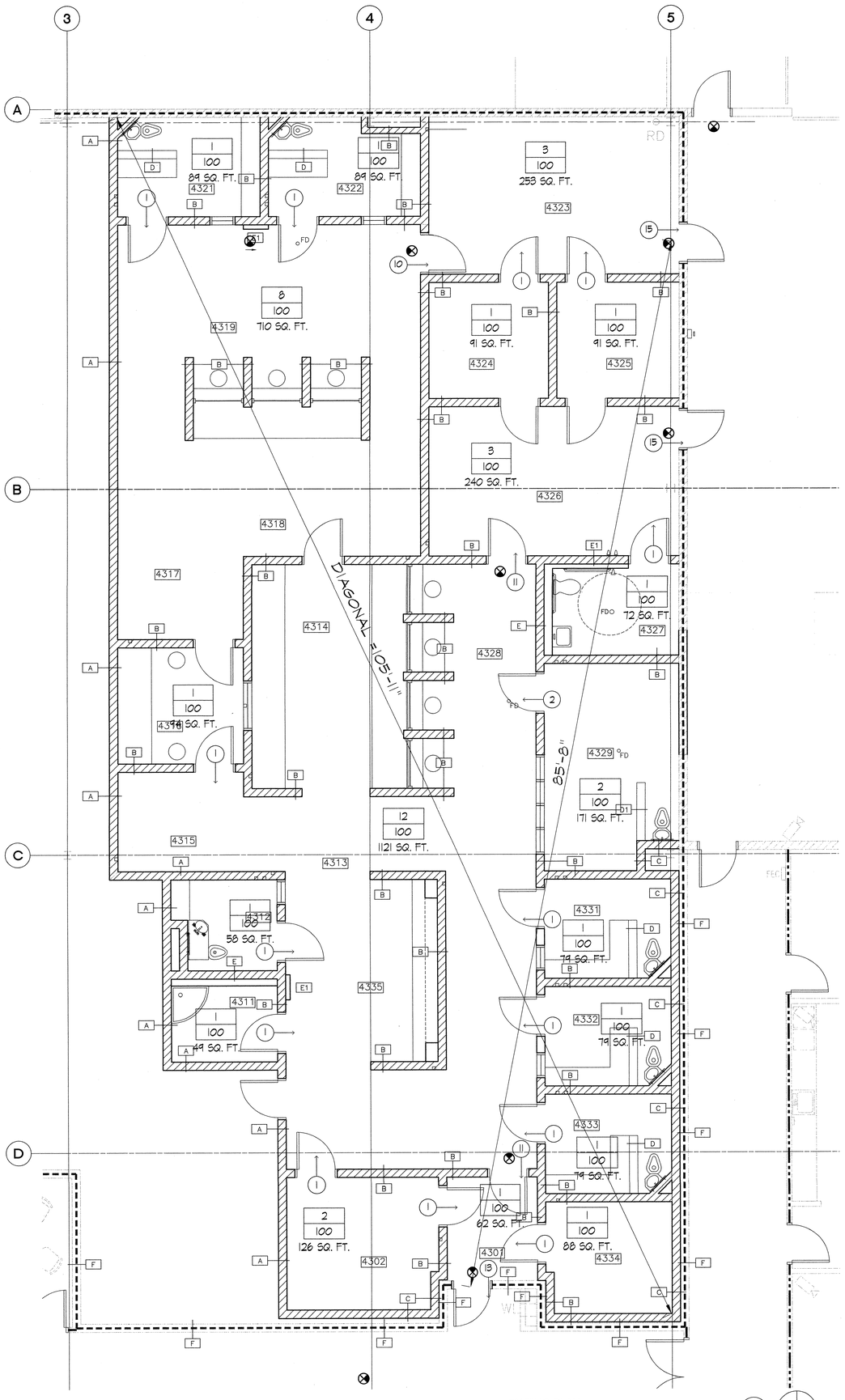

EXITING PLAN
1/4"=1'-0"

1

N

ROOM SCHEDULE

NUMBER	DESCRIPTION
4301	VESTIBULE
4302	LG. ATTY. INT./ VISIT ROOM
4311	JANITOR
4312	TEMP. HOLDING CELL
4313	OFFICER CONTROL AREA
4314	PROP. STORAGE
4315	ADULT PHOTO
4316	F. PRINT/ LIVESCAN
4317	JUVENILE PHOTO
4318	OFFICER CONTROL AREA
4319	JUVENILE BOOKING
4321	JUVENILE TEMP. HOLDING
4322	JUVENILE TEMP. HOLDING
4323	JUVENILE SEARCH
4324	DRE. ROOM
4325	INTOX. ROOM
4326	ADULT SEARCH
4327	TOILET
4328	ADULT BOOKING
4329	SOBER CELL
4331	MEN'S TEMP. HOLDING CELL
4332	WOMEN'S TEMP. HOLDING CELL
4333	TEMP. HOLDING
4334	TEMP. ATTY. INT./ VISIT ROOM
4335	WORK AREA

PARTITION LEGEND

SYMBOL	DESCRIPTION
	NEW PARTITION
	NEW CONCRETE MASONRY UNIT WALL
	EXISTING PARTITION TO REMAIN
	EXISTING BLOCK WALL TO REMAIN
X1	EXIT LIGHT, SHADED AREA INDICATES ILLUMINATION. ARROW INDICATES DIRECTION OF TRAVEL
3 / 100 / 299 SQ. FT.	NO. OF OCCUPANTS / OCCUPANT LOAD FACTOR / AREA
1	NO. OF OCCUPANTS EXITING

KEY PLAN

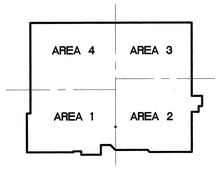

CARRIER JOHNSON
ARCHITECTURE
INTERIOR DESIGN
PLANNING

GORDON R. CARRIER AIA
MICHAEL C. JOHNSON AIA

WILLIAM C. BOCKEN AIA
DEBORAH P. ELLIOTT IIDA

2600 MICHELSON DRIVE
SUITE 400
IRVINE, CALIFORNIA
92612

TEL 949 955-2353
FAX 949 955-2377

1301 THIRD AVENUE
SAN DIEGO, CALIFORNIA
92101

TEL 619 239-2353
FAX 619 239-6227

RECORD DOCUMENTS
RECORD DRAWINGS PREPARED BY CARRIER JOHNSON FOR USE AS RECORD DOCUMENTS WILL SHOW THE REPORTED LOCATION OF THE WORK AND SIGNIFICANT CHANGES MADE DURING THE CONSTRUCTION PROCESS. HOWEVER BASED ON LIMITED FIELD OBSERVATION BY THE CONSTRUCTION MANAGER AND OTHER PARTIES WHICH WILL BE ASSUMED RELIABLE, CARRIER JOHNSON CANNOT AND DOES NOT WARRANT THE ACCURACY OR COMPLETENESS OF ELECTRONIC INFORMATION AND SHALL NOT BE RESPONSIBLE FOR ANY ERRORS OR OMISSIONS WHICH MAY BE INCORPORATED THEREIN AS A RESULT OF ELECTRONIC TRANSFER. IT IS THE USER'S RESPONSIBILITY TO FIELD CONFIRMATION OF EXISTING CONDITIONS.

ONTARIO PD:: TEMPORARY HOLDING AREA

2534 S. ARCHIBALD AVE., ONTARIO, CALIFORNIA 91761

B.O.C.
Re-Submittal 07.30.03

F13 Field Order #13 07.01.03

F9 Bldg. Dept./B.O.C. Re-Submittal 06.06.2003

ISSUES:

DIRECTORY/FILE NUMBER: 4511-A210

XREF'S DRAWINGS:

PROJECT NUMBER:
4511.00

DRAWN BY: CHECKED BY:

DATE:
3/26/03

SCALE:
AS NOTED

TITLE:
EXITING PLAN

DRAWING NO:
A2.1.0XH

CARRIER JOHNSON: FILING THESE DRAWINGS OR SPECIFICATIONS WITH ANY PUBLIC AGENCY IS NOT A PUBLICATION OF SAME. NO COPYING, REPRODUCTION OR USE THEREOF IS PERMISSIBLE WITHOUT THE CONSENT OF CARRIER JOHNSON.

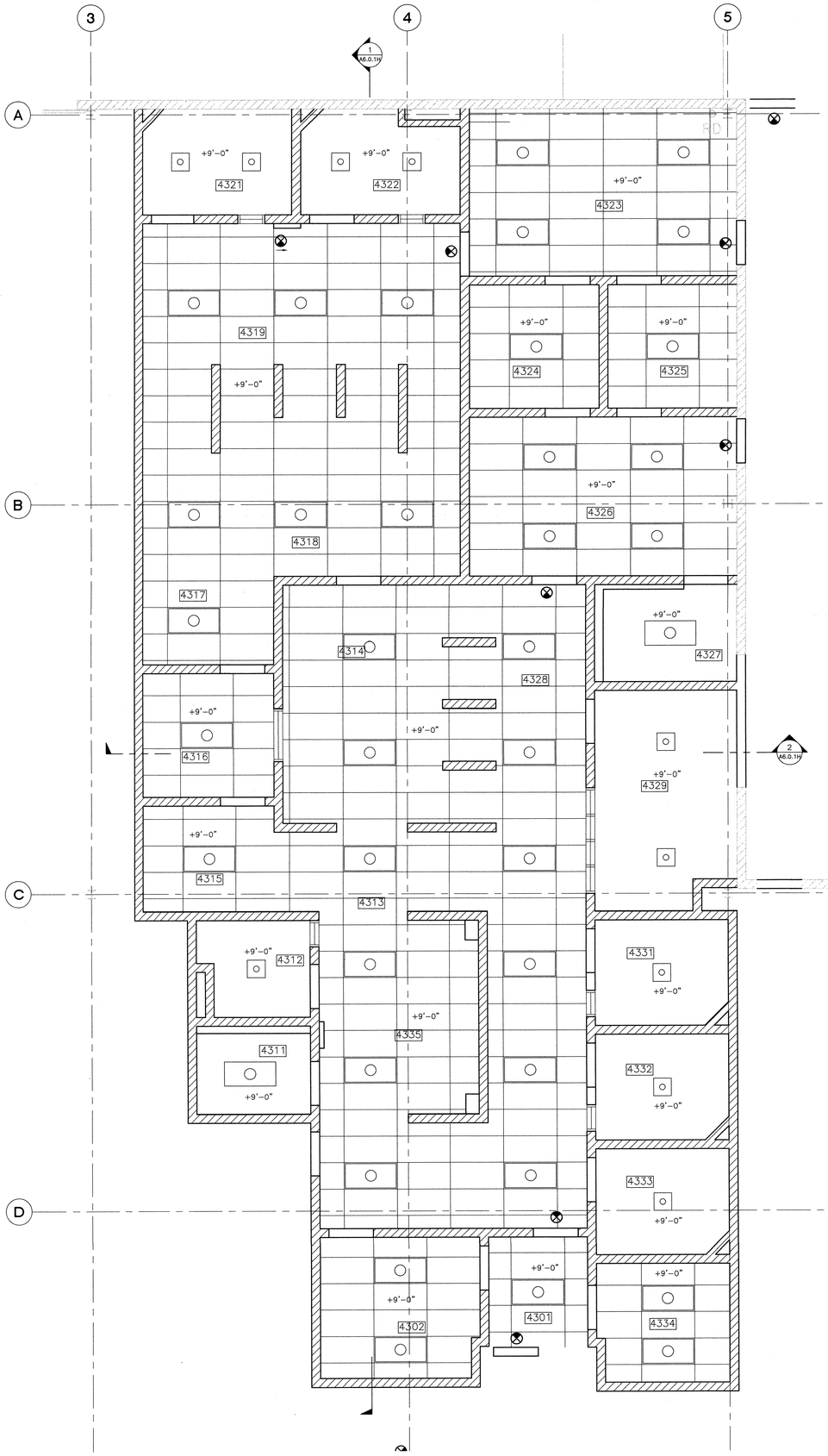

REFLECTED CEILING PLAN - TEMPORARY HOLDING AREA 2
1/4"=1'-0"

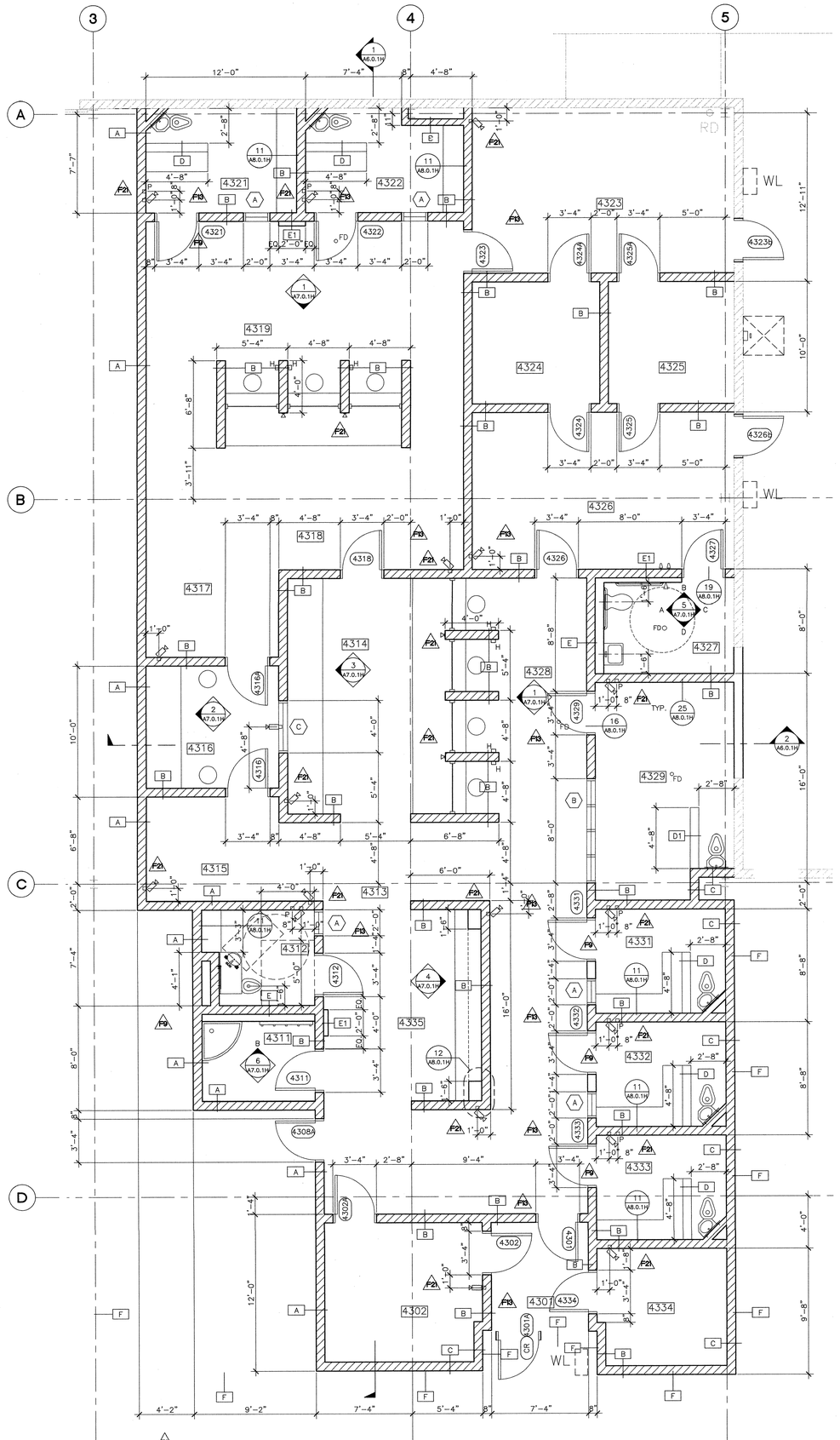

FLOOR PLAN - TEMPORARY HOLDING AREA 1
1/4"=1'-0"

ROOM SCHEDULE

NUMBER	DESCRIPTION
4301	VESTIBULE
4302	LG. ATTY. INT./ VISIT ROOM
4311	JANITOR
4312	TEMP. HOLDING CELL
4313	OFFICER CONTROL AREA
4314	PROP. STORAGE
4315	ADULT PHOTO
4316	F. PRINT/ LIVESCAN
4317	JUEVENILE PHOTO
4318	OFFICER CONTROL AREA
4319	JUEVENILE BOOKING
4321	JUEVENILE TEMP. HOLDING
4322	JUEVENILE TEMP. HOLDING
4323	JUEVENILE SEARCH
4324	DRE. ROOM
4325	INTOX. ROOM
4326	ADULT SEARCH
4327	TOILET
4328	ADULT BOOKING
4329	SOBER CELL
4331	MEN'S TEMP. HOLDING CELL
4332	WOMEN'S TEMP. HOLDING CELL
4333	TEMP. HOLDING
4334	TEMP. ATTY. INT./ VISIT ROOM
4335	WORK AREA

PARTITION LEGEND

SYMBOL	DESCRIPTION
	NEW PARTITION
	NEW CONCRETE MASONRY UNIT WALL
	2 HOUR RATED PARTITION :SHOWN FOR REFERENCE ONLY
	EXISTING PARTITION TO REMAIN
	EXISTING BLOCK WALL TO REMAIN
—x—x—x—	WIRE MESH PARTITIONS/DOORS TO 12'-0" A.F.F.
XXXX	DOOR NUMBER AND/OR "E" = EXISTING TO REMAIN "CR" = CARD READER
F.E.C.	FIRE EXTINGUISHER CABINETS–REFER TO DETAIL 1/A8.0.2
	SECURITY CAMERA WITH INTEGRAL AUDIO MONITORING TIED TO WATCH COMMANDERS OFFICE, TYPICAL MOUNTING HEIGHT 8'-0" TO TOP OF JUNCTION BOX
P	PANIC/CALL BUTTON TIED TO WATCH COMMANDERS OFFICE, TYPICAL MOUNTING HEIGHT 40" AFF TO CENTERLINE OF BUTTON
WL	WEAPONS LOCKER
H	HANDSET 40" AFF TO CL OF DEVICE
	TELEPHONE 40" AFF TO CL OF DEVICE
	PLUMBING ACCESS PANEL ELMDOOR SLA SERIES
	2'X4' FLOURESCENT FIXTURE
	2'X4' SUSPENDED CEILING
	RECESSED SECURITY FIXTURE
	EXIT SIGN, SHADED AREA INDICATES ILLUMINATED SIDE. ARROW INDICATES DIRECTION OF TRAVEL.
	RELOCATED EXISTING EYEWASH. PROVIDE ALTERNATE PRICE TO ADD NEW EYEWASH.

GENERAL NOTES

1. WHERE NEW BLOCK WALLS ARE REQUIRED; MATCH EXISTING AND ALIGN FINISH FACE.
2. CLEAN EXISTING BLOCK WALLS NOTED TO REMAIN AND PREP FOR PAINT, HIGH GLOSS FINISH.
3. ALL DIMENSIONS ARE FINISH FACE UNLESS NOTED OTHERWISE.
4. ALL FIRE EXTINGUISHER QUANTITIES/LOCATIONS MUST BE APPROVED BY FIRE MARSHALL PRIOR TO INSTALLATION. REFER TO DETAIL 1/A8.0.2.
5. REFER TO MOUNTING HEIGHT SCHEDULE ON SHEET A0.4 FOR DEVICE AND ACCESSORY HEIGHT LOCATIONS.
6. PROVIDE 2–HOUR SPRAY APPLIED FIRE PROOFING TO UNDERSIDE OF METAL DECK THROUGHOUT AREA OF NEW CONSTRUCTION. FIRE PROOFING TO EXTEND 5'–0" BEYOND EXTERIOR EDGES OF ALL TWO HOUR RATED WALLS.
7. THE LOCATION OF AUTOMATIC FIRE SPRINKLER SYSTEM AND ALL RELATED EQUIPMENT AS SHOWN ON THE PLANS ARE ONLY FOR REFERENCE AND DO NOT CONSTITUTE SHOP DRAWINGS WHICH ARE REQUIRED FOR REVIEW AND APPROVAL.

KEY PLAN

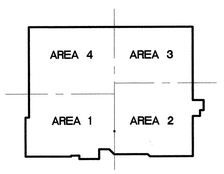

ARCHITECTURE
INTERIOR DESIGN
PLANNING

CARRIER JOHNSON

GORDON R. CARRIER AIA
MICHAEL C. JOHNSON AIA

WILLIAM C. BOCKEN AIA
DEBORAH F. ELLIOTT IIDA

2600 MICHELSON DRIVE
SUITE 400
IRVINE, CALIFORNIA
92612

TEL 949 955-2353
FAX 949 955-2377

1301 THIRD AVENUE
SAN DIEGO, CALIFORNIA
92101

TEL 619 239-2353
FAX 619 239-6227

RECORD DOCUMENTS
THESE DOCUMENTS RELEASED BY CARRIER JOHNSON FOR USE AS RECORD DOCUMENTS ONLY AFTER THEY HAVE BEEN MARKED TO REFLECT THE ACTUAL LOCATION OF THE WORK AND SIGNIFICANT CHANGES MADE DURING THE CONSTRUCTION PROCESS, AND ARE BASED ON UNVERIFIED INFORMATION PROVIDED TO CARRIER JOHNSON BY THE CONTRACTOR AND OTHER PARTIES WHICH WILL BE ASSUMED RELIABLE. CARRIER JOHNSON CANNOT AND DOES NOT WARRANT THE ACCURACY, RELIABILITY, COMPLETENESS OF THIS INFORMATION AND SHALL NOT BE RESPONSIBLE FOR ANY ERRORS OR OMISSIONS WHICH MAY BE INCORPORATED THEREIN AS A RESULT OF INACCURATE OR INCOMPLETE INFORMATION. FIELD CONFIRMATION OF EXISTING CONDITIONS.

ONTARIO PD:: TEMPORARY HOLDING AREA

2534 S. ARCHIBALD AVE., ONTARIO, CALIFORNIA 91761

B.O.C.
Re-Submittal 07.30.03
F10 Field Order #13 07.01.03
F9 Bldg. Dept./B.O.C. Re-Submittal 06.06.2003

ISSUES:
DIRECTORY/FILE NUMBER: 4511–A214

XREF'S DRAWINGS:

PROJECT NUMBER:
4511.00

DRAWN BY: CHECKED BY:

DATE:
3/26/03

SCALE:
AS NOTED

TITLE:
TEMPORARY HOLDING AREA FLOOR PLAN & R.C.P

DRAWING NO:
A2.1.4H

THIS PROJECT AND THESE DRAWINGS OR SPECIFICATIONS WITH ANY PUBLIC AGENCY IS NOT A PUBLICATION OF SAME. NO COPYING, REPRODUCTION OR USE THEREOF IS PERMISSIBLE WITHOUT THE CONSENT OF CARRIER JOHNSON.

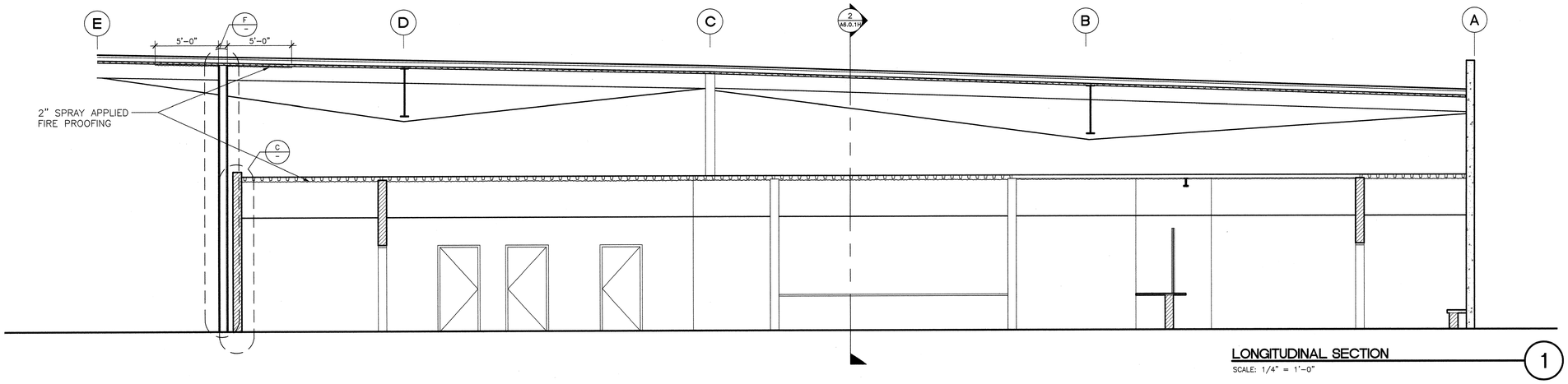

LONGITUDINAL SECTION — 1
SCALE: 1/4" = 1'-0"

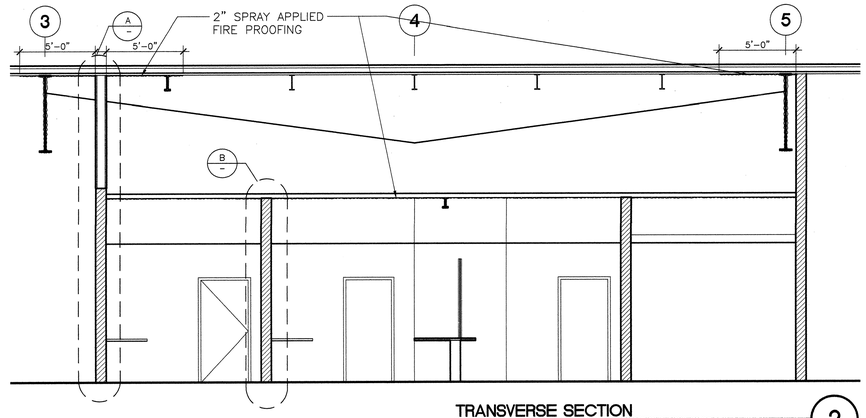

TRANSVERSE SECTION — 2
SCALE: 1/4" = 1'-0"

ARCHITECTURE
INTERIOR DESIGN
PLANNING

CARRIER JOHNSON

GORDON R. CARRIER AIA
MICHAEL C. JOHNSON AIA

WILLIAM C. BOCKEN AIA
DEBORAH P. ELLIOTT IIDA

2600 MICHELSON DRIVE
SUITE 400
IRVINE, CALIFORNIA
92612

TEL 949 955-2353
FAX 949 955-2377

1301 THIRD AVENUE
SAN DIEGO, CALIFORNIA
92101

TEL 619 239-2353
FAX 619 239-6227

RECORD DOCUMENTS
THESE DOCUMENTS RELEASED BY CARRIER JOHNSON FOR USE AS RECORD DOCUMENTS ARE LIMITED TO THE LOCATION OF THE WORK AND SIGNIFICANT CHANGES MADE DURING THE CONSTRUCTION PROCESS, AND ARE BASED ON UNVERIFIED INFORMATION PROVIDED TO US BY CONTRACTOR AND OTHER PARTIES WHICH WILL BE ASSUMED RELIABLE. CARRIER JOHNSON CANNOT AND DOES NOT WARRANT THE ACCURACY AND COMPLETENESS OF THIS INFORMATION AND SHALL NOT BE RESPONSIBLE FOR ANY ERRORS OR OMISSIONS WHICH MAY BE INCORPORATED THEREIN AS A RESULT. FUTURE CONSTRUCTION PLANNING MUST INCLUDE FIELD CONFIRMATION OF EXISTING CONDITIONS.

ONTARIO PD:: TEMPORARY HOLDING AREA

2534 S. ARCHIBALD AVE., ONTARIO, CALIFORNIA 91761

WALL TYPE SCHEDULE

WALL TYPE	STUD SIZE	STUD GAGE	OVERALL DIM.	FIRE RATING	UL DESIGN NO.	GYPSUM TYPE
F	3-5/8"	20 GA	6-1/8"	2HR RATED	U425	TYPE X

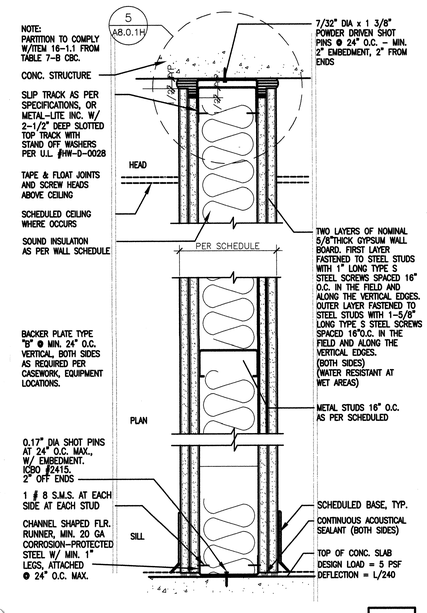

2-HOUR RATED PARTITION — F
SCALE: 3" = 1'-0"

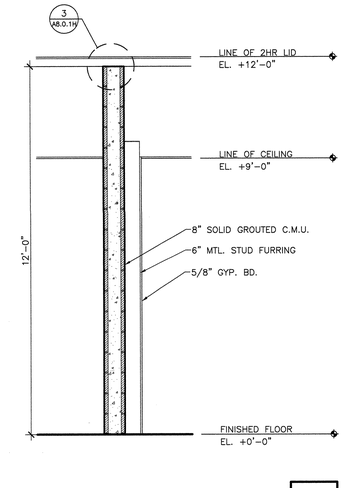

FURRING WALL — E
SCALE: 1/2" = 1'-0"

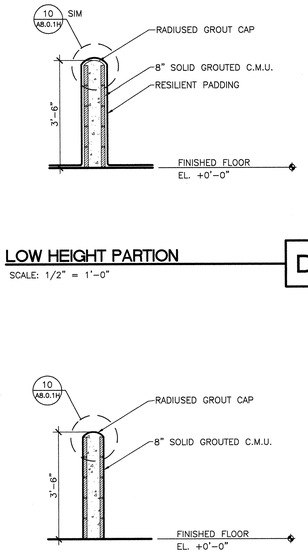

LOW HEIGHT PARTION — D1
SCALE: 1/2" = 1'-0"

LOW HEIGHT PARTION — D
SCALE: 1/2" = 1'-0"

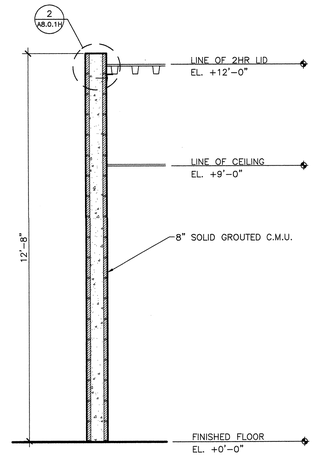

FLOOR TO 8" ABOVE DECK — C
SCALE: 1/2" = 1'-0"

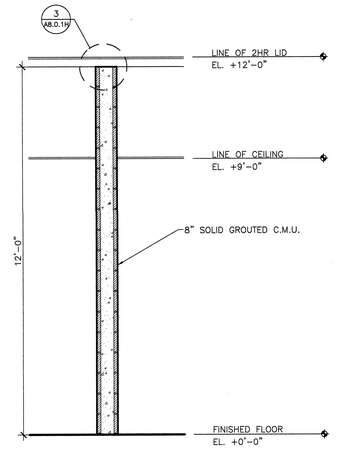

FLOOR TO DECK — B
SCALE: 1/2" = 1'-0"

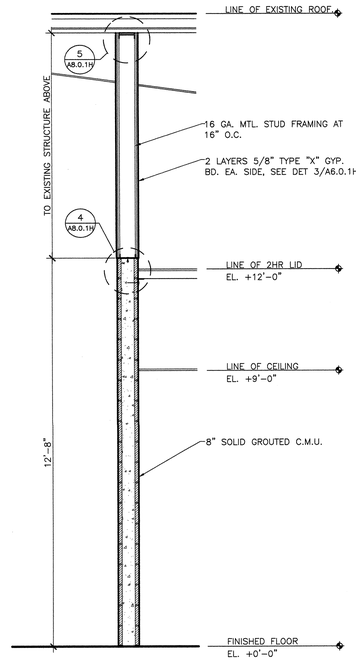

FLOOR TO EXIST. STRUCT. — A
SCALE: 1/2" = 1'-0"

B.O.C.
Re-Submittal 07.30.03
Field Order #13 07.01.03
Bldg. Dept./B.O.C. Re-Submittal 06.06.2003

ISSUES:
DIRECTORY/FILE NUMBER: 4511.00
XREF'S DRAWINGS:
PROJECT NUMBER: 4511.00
DRAWN BY:
CHECKED BY:
DATE:
SCALE: AS NOTED
TITLE: HOLDING AREA SECTIONS

DRAWING NO: A6.0.1H

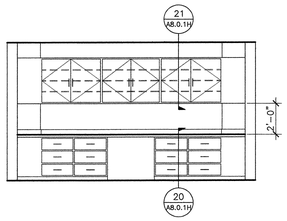

BOOKING AREA 4
SCALE: 1/4" = 1'-0"

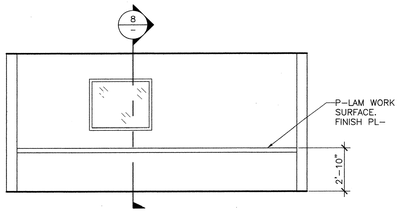

BOOKING AREA 3
SCALE: 1/4" = 1'-0"

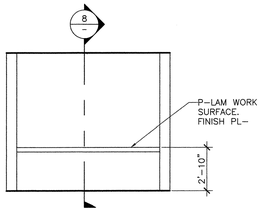

BOOKING AREA 2
SCALE: 1/4" = 1'-0"

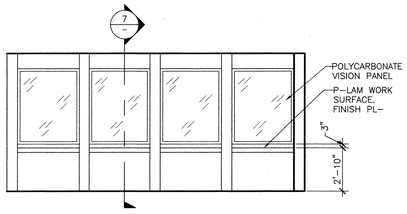

BOOKING AREA 1
SCALE: 1/4" = 1'-0"

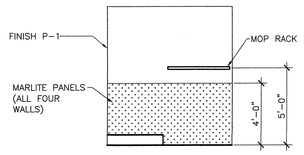

JANITOR'S CLOSET 6
SCALE: 1/4" = 1'-0"

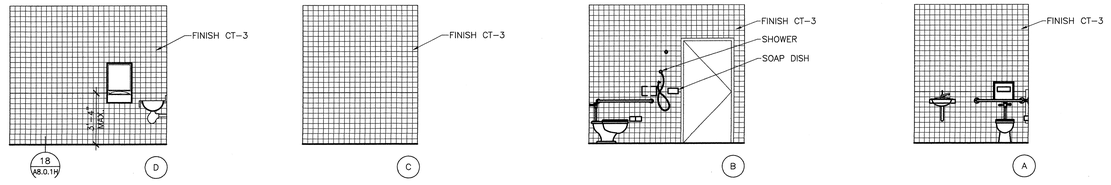

RESTROOM ELEVATIONS 5
SCALE: 1/4" = 1'-0"

VISION PANEL JAMB 10
SCALE: HALF SIZE 4511I004H

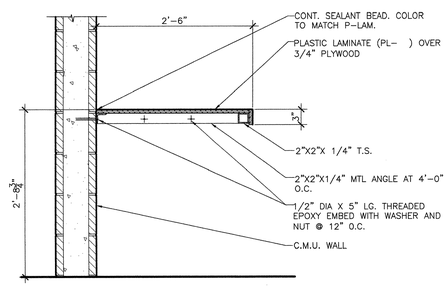

SECTION THRU COUNTER 8
SCALE: 1" = 1'-0" 4511I002H

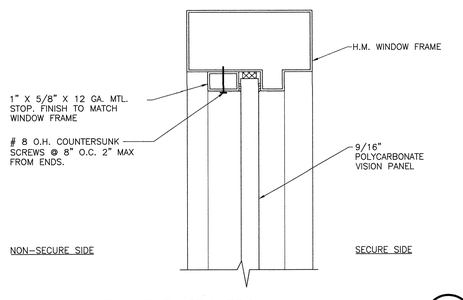

VISION PANEL HEAD (SILL SIM.) 9
SCALE: HALF SIZE 4511I003H

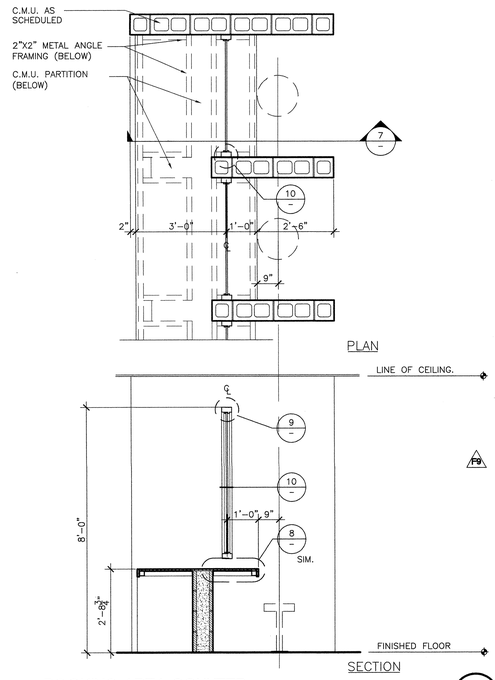

BOOKING AREA COUNTER 7
SCALE: 1/2" = 1'-0" 4511I001H

CARRIER JOHNSON

ARCHITECTURE

INTERIOR DESIGN

PLANNING

GORDON R. CARRIER AIA
MICHAEL C. JOHNSON AIA

WILLIAM C. BOCKEN AIA
DEBORAH P. ELLIOTT IIDA

2600 MICHELSON DRIVE
SUITE 400
IRVINE, CALIFORNIA
92612

TEL 949 955-2353
FAX 949 955-2377

1301 THIRD AVENUE
SAN DIEGO, CALIFORNIA
92101

TEL 619 239-2353
FAX 619 239-6227

RECORD DOCUMENTS
THESE DOCUMENTS PREPARED BY CARRIER JOHNSON FOR RECORD AND CONSTRUCTION PLANNING ONLY AND ARE NOT INTENDED FOR USE AS RECORD DOCUMENTS WILL SHOW THE REPORTED LOCATION OF THE WORK AND SIGNIFICANT CHANGES MADE DURING THE CONSTRUCTION PROCESS, AND WE BASED ON INFORMATION PROVIDED BY THE CONSTRUCTION CONTRACTOR AND OTHER PARTIES WHICH WILL BE ASSUMED RELIABLE. CARRIER JOHNSON CANNOT AND DOES NOT WARRANT THE COMPLETENESS AND ACCURACY OF THIS INFORMATION AND SHALL NOT BE RESPONSIBLE FOR ANY ERRORS OR OMISSIONS WHICH MAY BE INCORPORATED THEREIN AS A RESULT. CONTRACTOR SHALL VERIFY ALL AS-BUILT FIELD CONFIRMATION OF EXISTING CONDITIONS.

ONTARIO PD:: TEMPORARY HOLDING AREA

2534 S. ARCHIBALD AVE., ONTARIO, CALIFORNIA 91761

B.O.C.
Re-Submittal 07.30.03

P3 Field Order #13
07.01.03

P2 Bldg. Dept./B.O.C.
Re-Submittal 06.06.2003

ISSUES:

DIRECTORY/FILE NUMBER: 4511.00

XREF'S DRAWINGS:

PROJECT NUMBER:
4511.00

DRAWN BY: CHECKED BY:

DATE:

SCALE:
1/4" = 1'-0"

TITLE:
INTERIOR ELEVATIONS & CASEWORK SECTIONS

DRAWING NO:

A7.0.1H

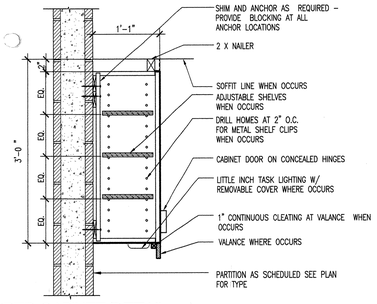

UPPER CABINET DETAIL

SCALE: 1" = 1'-0" 45111031H **21**

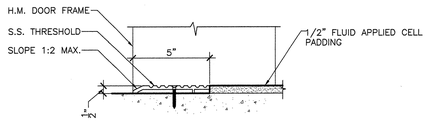

TRANSITION -FLOOR PADDING TO CONCRETE

SCALE: 3" = 1'-0" 45111029H **16**

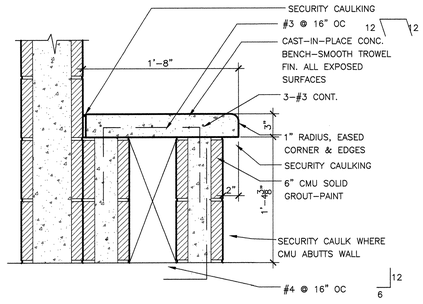

BENCH

SCALE: 1 1/2" = 1'-0" 45111019H **11**

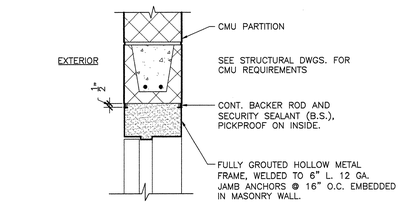

H.M. DOOR HEAD

SCALE: 1 1/2" = 1'-0" 45111011H **6**

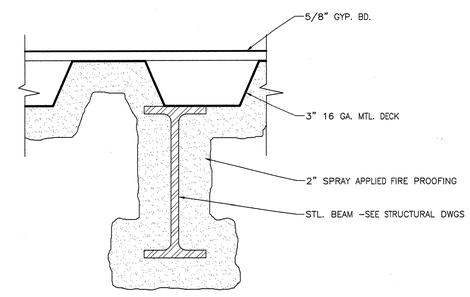

2 HOUR RATED LID (UL #P805)

SCALE: 3" = 1'-0" 45111009H **1**

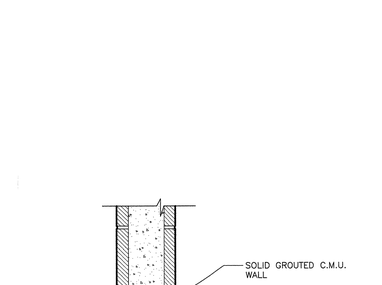

SECURITY GYP. BD. CEILING

SCALE: 3" = 1'-0" 45111033H **22**

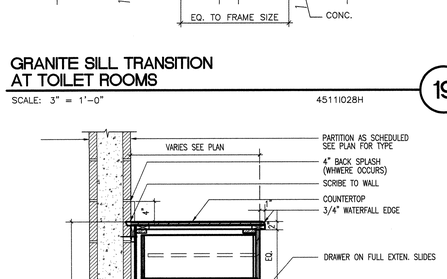

SINK SECTION

SCALE: 3/4" = 1'-0" 45111020H **17**

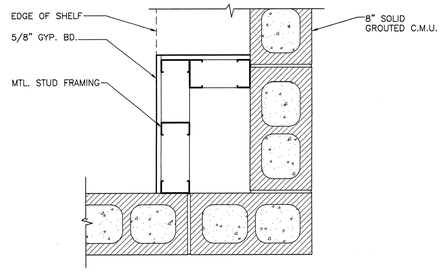

PLUMBING CHASE

SCALE: 1 1/2" = 1'-0" 45111010H **12**

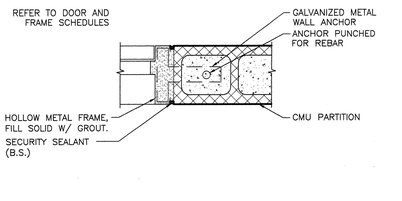

H.M. DOOR JAMB

SCALE: 1 1/2" = 1'-0" 45111012H **7**

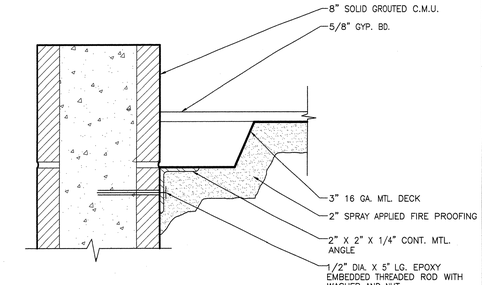

2 HOUR RATED DECK AT PERMIETER WALL

SCALE: 3" = 1'-0" 45111008H **2**

DOOR GLAZING

SCALE: HALF SIZE 45111032H **23**

CERAMIC TILE BASE

SCALE: HALF SIZE 45111027H **18**

SLIDING DETENTION DOOR

SCALE: 1 1/2" = 1'-0" 45111015H **13**

WINDOW HEAD/ SILL

SCALE: 1 1/2" = 1'-0" 45111016H **8**

2 HOUR RATED C.M.U. WALL HEAD AT DECKING

SCALE: 3" = 1'-0" 45111007H **3**

FLOOR PADDING @ RM 4329

SCALE: 1 1/2" = 1'-0" 45111035H **25**

GRANITE SILL TRANSITION AT TOILET ROOMS

SCALE: 3" = 1'-0" 45111028H **19**

SLIDING DOOR HEAD

SCALE: 1 1/2" = 1'-0" 45111013H **14**

WINDOW JAMB

SCALE: 1 1/2" = 1'-0" 45111017H **9**

C.M.U. TO GYP. BD. WALL JOINT

SCALE: 3" = 1'-0" 45111006H **4**

BASE CABINET DETAIL

SCALE: 1" = 1'-0" 45111030H **20**

SLIDING DOOR SILL

SCALE: 1 1/2" = 1'-0" 45111014H **15**

LOW PARTITION CAP

SCALE: 1 1/2" = 1'-0" 45111018H **10**

2 HOUR RATED WALL HEAD TO EXISTING ROOF ASSEMBLY

SCALE: 1 1/2" = 1'-0" 45111005H **5**

ARCHITECTURE
INTERIOR DESIGN
PLANNING

CARRIER JOHNSON

GORDON R. CARRIER AIA
MICHAEL C. JOHNSON AIA

WILLIAM C. BOCKEN AIA
DEBORAH P. ELLIOTT IIDA

2600 MICHELSON DRIVE
SUITE 400
IRVINE, CALIFORNIA
92612

TEL 949 955-2353
FAX 949 955-2377

1301 THIRD AVENUE
SAN DIEGO, CALIFORNIA
92101

TEL 619 239-2353
FAX 619 239-6227

RECORD DOCUMENTS
THESE DRAWINGS ARE NOT CARRIER JOHNSON FOR USE AS RECORD DOCUMENTS WILL SHOW THE REPORTED LOCATION OF THE WORK AND SIGNIFICANT CHANGES MADE DURING THE CONSTRUCTION PROCESS, AND ARE BASED ON INFORMATION FURNISHED BY OTHERS. CARRIER JOHNSON AND OTHER PARTIES WHICH WILL BE ASSUMED RELIABLE. CARRIER JOHNSON CANNOT AND DOES NOT WARRANT THE ACCURACY OF SUCH INFORMATION AND SHALL NOT BE RESPONSIBLE FOR ANY ERRORS OR OMISSIONS WHICH MAY BE INCORPORATED THEREIN AS A RESULT OF SUCH INFORMATION. THIS LIMITATION SHALL INCLUDE FIELD CONFIRMATION OF EXISTING CONDITIONS.

ONTARIO PD:: TEMPORARY HOLDING AREA

2534 S. ARCHIBALD AVE., ONTARIO, CALIFORNIA 91761

B.O.C. Re-Submittal 07.30.03
Field Order #13 07.01.03
Bldg. Dept./B.O.C. Re-Submittal 06.06.2003

ISSUES:
DIRECTORY/FILE NUMBER: 4511.00
XREF'S DRAWINGS:
PROJECT NUMBER: 4511.00
DRAWN BY: CHECKED BY:
DATE:
SCALE: AS NOTED
TITLE: DETAILS

DRAWING NO: A8.0.1H

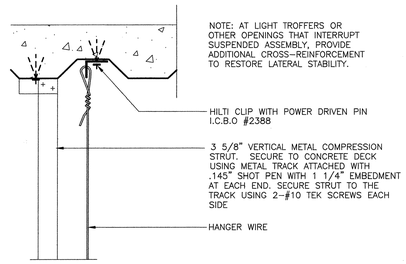

SUSPENDED CEILLING HANGER 6

SCALE: 3" = 1'-0" 4511I024H

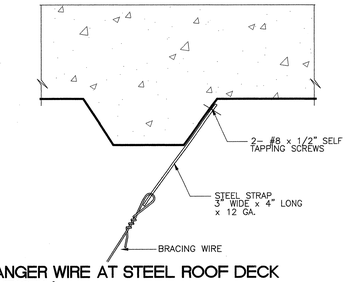

HANGER WIRE AT STEEL ROOF DECK (TYPICAL) 7

SCALE: HALF SIZE 4511I025H

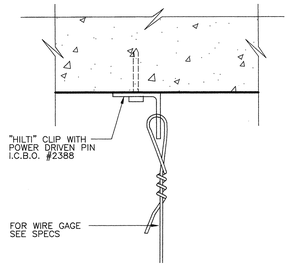

VERT. HANGER WIRE 8

SCALE: FULL SIZE 4511I026H

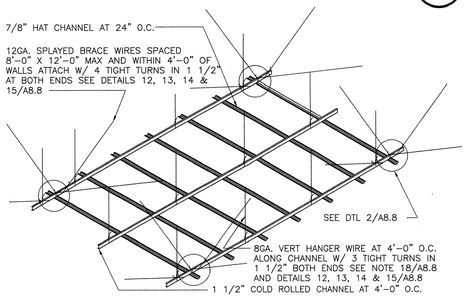

SUSPENDED GYP. BD. CEILLING (TYPICAL) 9

SCALE: N.T.S. 4511I034H

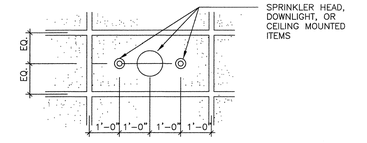

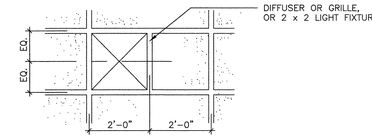

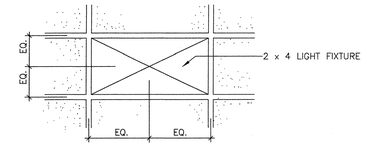

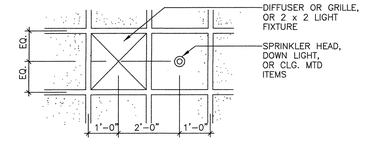

TYPICAL CEILING TILE LAYOUT 3

SCALE: 1/2" = 1'-0" 4511I021H

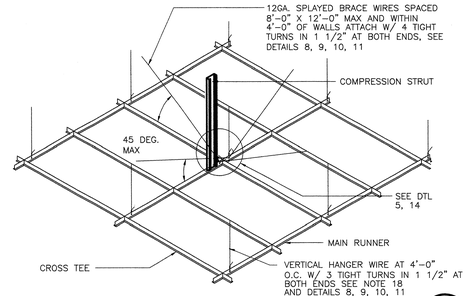

SUSPENDED CEILLING (TYPICAL) 4

SCALE: N.T.S. 4511I022H

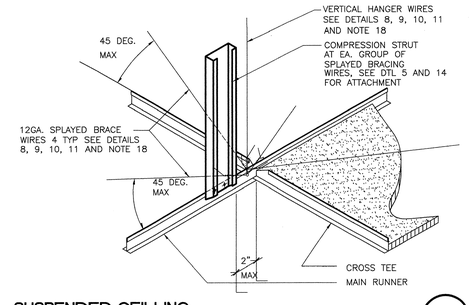

SUSPENDED CEILLING 5

SCALE: N.T.S. 4511I023H

ARCHITECTURE
INTERIOR DESIGN
PLANNING

CARRIER JOHNSON

GORDON R. CARRIER AIA
MICHAEL C. JOHNSON AIA

WILLIAM C. BOCKEN AIA
DEBORAH P. ELLIOTT IIDA

2600 MICHELSON DRIVE
SUITE 400
IRVINE, CALIFORNIA
92612

TEL 949 955-2353
FAX 949 955-2377

1301 THIRD AVENUE
SAN DIEGO, CALIFORNIA
92101

TEL 619 239-2353
FAX 619 239-6227

RECORD DOCUMENTS
THESE DOCUMENTS RELEASED BY CARRIER JOHNSON FOR USE AS RECORD DOCUMENTS WILL SHOW THE REPORTED LOCATION OF THE WORK, AND SIGNIFICANT CHANGES MADE DURING THE CONSTRUCTION PROCESS, AS PROVIDED ON MARKED PRINTS FURNISHED TO CARRIER JOHNSON BY CONTRACTOR AND OTHER PARTIES WHICH WILL BE ASSUMED RELIABLE. CARRIER JOHNSON CANNOT AND DOES NOT WARRANT THE ACCURACY AND COMPLETENESS OF SUCH INFORMATION AND SHALL NOT BE RESPONSIBLE FOR ANY ERRORS OR OMISSIONS WHICH MAY BE INCORPORATED THEREIN AS A RESULT OF INACCURATE OR INCOMPLETE INFORMATION FURNISHED. FIELD CONFIRMATION OF EXISTING CONDITIONS.

ONTARIO PD:: TEMPORARY HOLDING AREA

2534 S. ARCHIBALD AVE., ONTARIO, CALIFORNIA 91761

B.O.C. Re-Submittal 07.30.03
FIELD Field Order #13 07.01.03
FIELD Bldg. Dept./B.O.C. Re-Submittal 06.06.2003

ISSUES:
DIRECTORY/FILE NUMBER: 4511.00
XREF'S DRAWINGS:
PROJECT NUMBER: 4511.00
DRAWN BY: CHECKED BY:
DATE:
SCALE: AS NOTED
TITLE: DETAILS

DRAWING NO: A8.0.2H

F RATING = 1-HR. OR 2-HR.
T RATING = 0-HR.

L RATING AT AMBIENT = 5 CFM/SQ. FT.
L RATING AT 400°F = 2 CFM/SQ. FT.

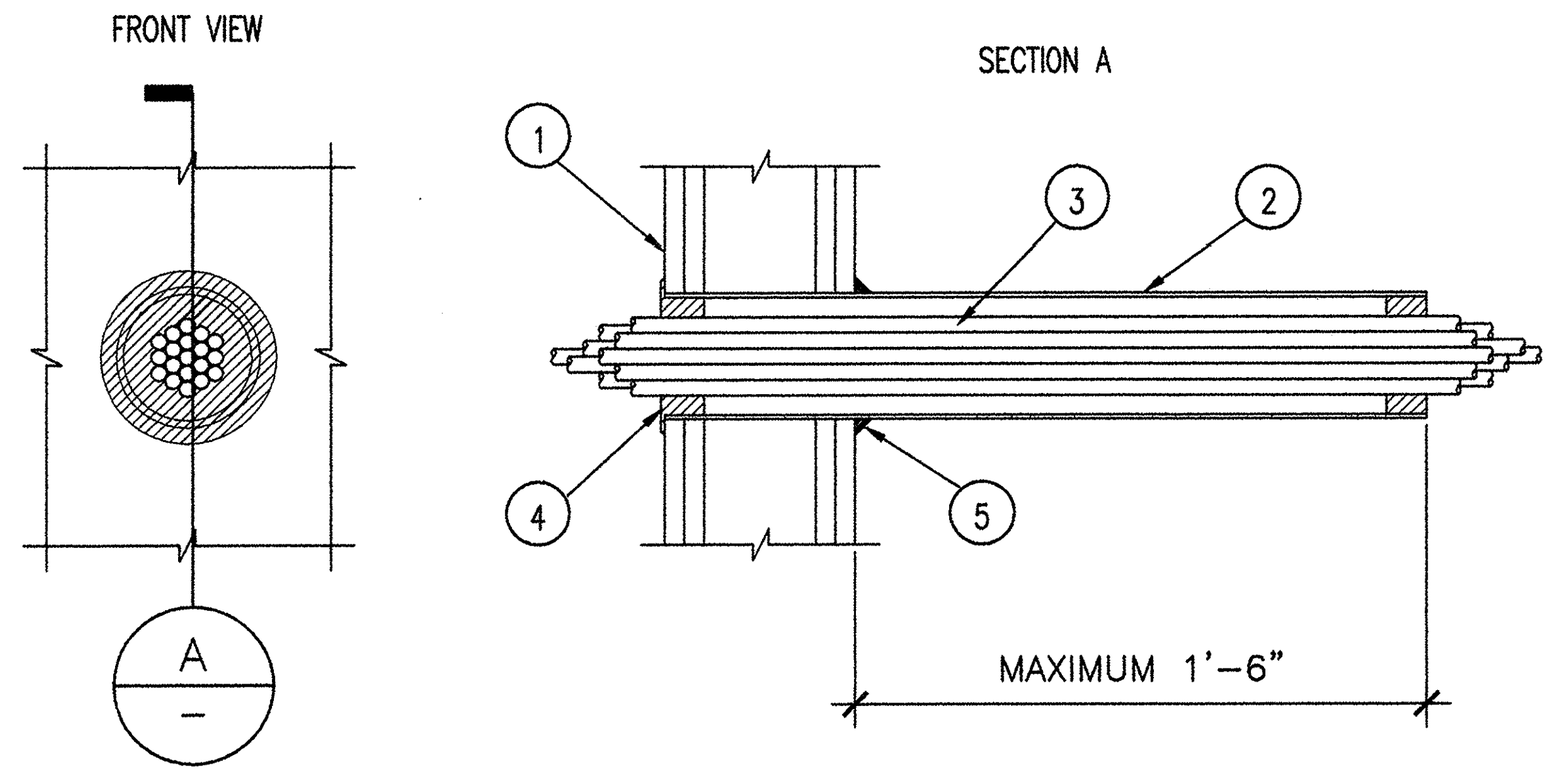

1. GYPSUM WALL ASSEMBLY (UL/ULC CLASSIFIED U300 OR U400 SERIES) (1-HR OR 2-HR FIRE-RATING) (2-HR SHOWN).
2. OPTIONAL: MAXIMUM 4" NOMINAL DIAMETER STEEL PIPE SLEEVE (SCHEDULE 5 OR THINNER) (SEE NOTE NO. 4 BELOW).
3. CABLE BUNDLE TO CONSIST OF ANY OF THE FOLLOWING:
   A. MAXIMUM 7/C NO. 12 AWG CABLE.
   B. MAXIMUM 25 PAIR NO. 24 TELEPHONE CABLE.
   C. RG 59 COAXIAL CABLE.
   D. 3/C NO. 14 AWG METAL-CLAD CABLE.
   E. 2/C NO. 8 AWG METAL-CLAD CABLE.
   F. MAXIMUM 5/8" DIAMETER FIBER-OPTIC CABLE.
4. INTUMESCENT FIRESTOP SEALANT:
   A. MINIMUM 5/8" DEPTH, FOR A 1-HR FIRE-RATING.
   B. MINIMUM 1-1/4" DEPTH, FOR A 2-HR FIRE-RATING.
5. SEE NOTE NO. 4 BELOW.

NOTES : 1. MAXIMUM DIAMETER OF OPENING = 4".
2. CABLES TO FILL MAXIMUM 33% OF CROSS-SECTIONAL AREA OF OPENING.
3. ANNULAR SPACE = MINIMUM 1/4", MAXIMUM 3/4".
4. STEEL SLEEVE MAY BE FLUSH WITH WALL SURFACE OR EXTEND UP TO 18" BEYOND WALL SURFACE. WHEN SLEEVE IS FLUSH WITH WALL, APPLY INTUMESCENT FIRESTOP SEALANT ONTO WALL SURFACE. WHEN SLEEVE IS EXTENDED BEYOND ONE OR BOTH SIDES OF WALL, APPLY 1/2" INTUMESCENT FIRESTOP SEALANT TO WALL/SLEEVE INTERFACE.

CABLE BUNDLE THRU. GYP. BD. FIRE WALL — 11

UL # WL3065
SCALE: N.T.S.
4511WL3065

F RATING = 3-HR.
T RATING = 0-HR.
L RATING AT AMBIENT = LESS THAN 1 CFM/SQ. FT.
L RATING AT 400° F = 4 CFM/SQ. FT.

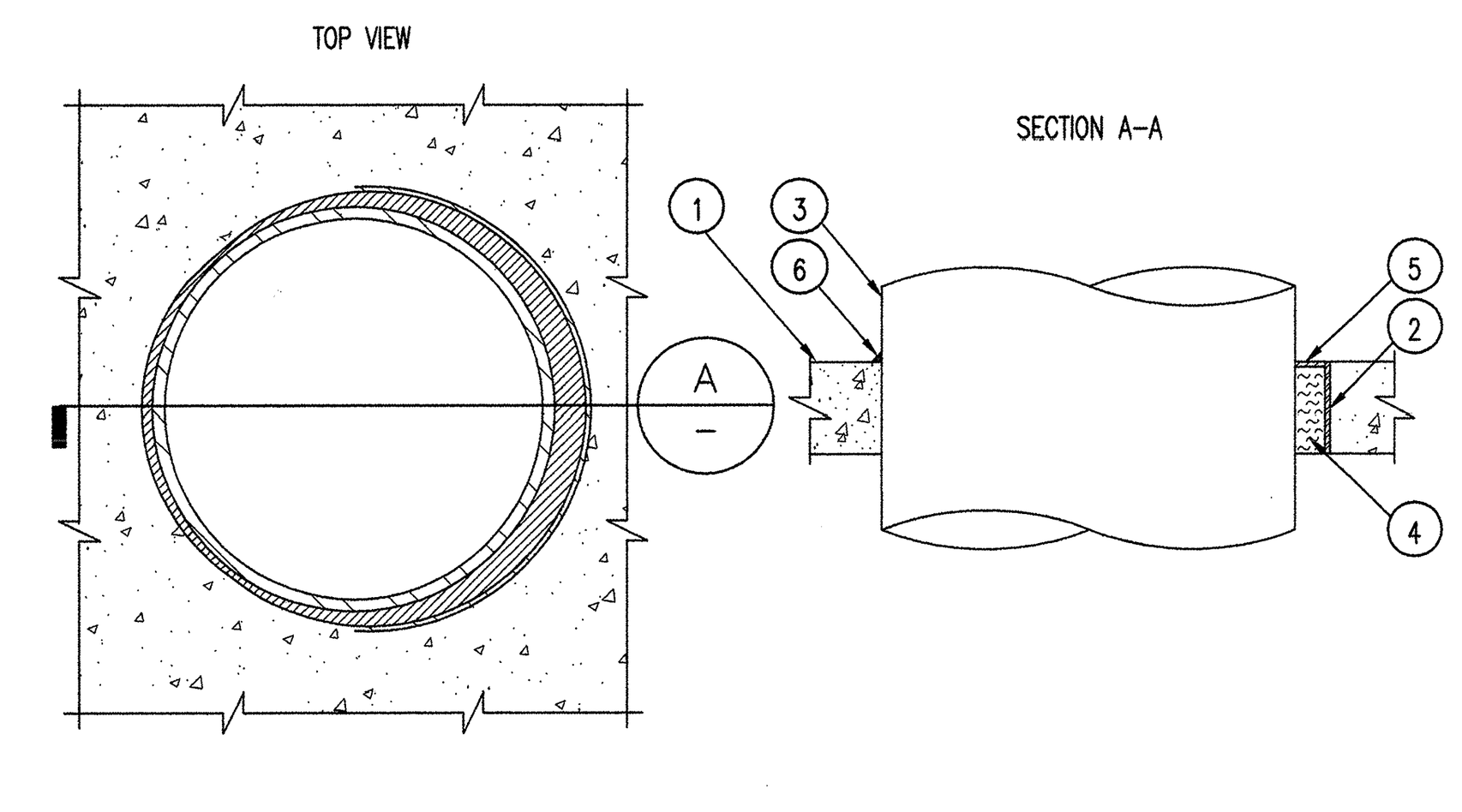

1. CONCRETE FLOOR OR WALL ASSEMBLY (3-HR FIRE-RATING):
   A. LIGHTWEIGHT OR NORMAL WEIGHT CONCRETE FLOOR OR WALL (MIN. 4-1/2" THICK).
   B. ANY UL/ULC CLASSIFIED CONCRETE BLOCK WALL.
2. OPTIONAL: MAXIMUM 32" NOMINAL DIAMETER STEEL PIPE SLEEVE (SCHEDULE 40 OR HEAVIER).
3. PENETRATING ITEM TO BE ONE OF THE FOLLOWING:
   A. MAXIMUM 30" NOMINAL DIAMETER STEEL PIPE (SCHEDULE 10 OR HEAVIER).
   B. MAXIMUM 30" NOMINAL DIAMETER CAST IRON PIPE.
   C. MAXIMUM 6" NOMINAL DIAMETER COPPER PIPE.
   D. MAXIMUM 6" NOMINAL DIAMETER STEEL CONDUIT.
   E. MAXIMUM 4" NOMINAL DIAMETER EMT.
4. MINIMUM 4" THICKNESS MINERAL WOOL (MIN. 4 PCF DENSITY) TIGHTLY PACKED.
5. MINIMUM 1/4" DEPTH INTUMESCENT FIRESTOP SEALANT.
6. MINIMUM 1/4" INTUMESCENT FIRESTOP SEALANT APPLIED AT POINT OF CONTACT.

NOTES : 1. MAXIMUM DIAMETER OF OPENING = 32".
2. ANNULAR SPACE = MINIMUM 0", MAXIMUM 1-7/8".
3. MINIMUM 1/4" DEPTH INTUMESCENT FIRESTOP SEALANT IS REQUIRED ON BOTH SIDES OF A WALL ASSEMBLY.

METAL PTPE THRU. A SLEEVE IN CONCRETE FLOOR/WALL OR BLOCK WALL — 1

UL # CAJ1226
SCALE: N.T.S.
4511CAJ1126

F RATING = 1-HR. AND 2-HR.
T RATING = 1/2 HR., 3/4 HR., 1-HR., AND 1-3/4 HR. (SEE U.L. FIRE RESISTANCE DIRECTORY)
L RATING AT AMBIENT = 4 CFM/SQ. FT.
L RATING AT 400°F = LESS THAN 1 CFM/SQ. FT.

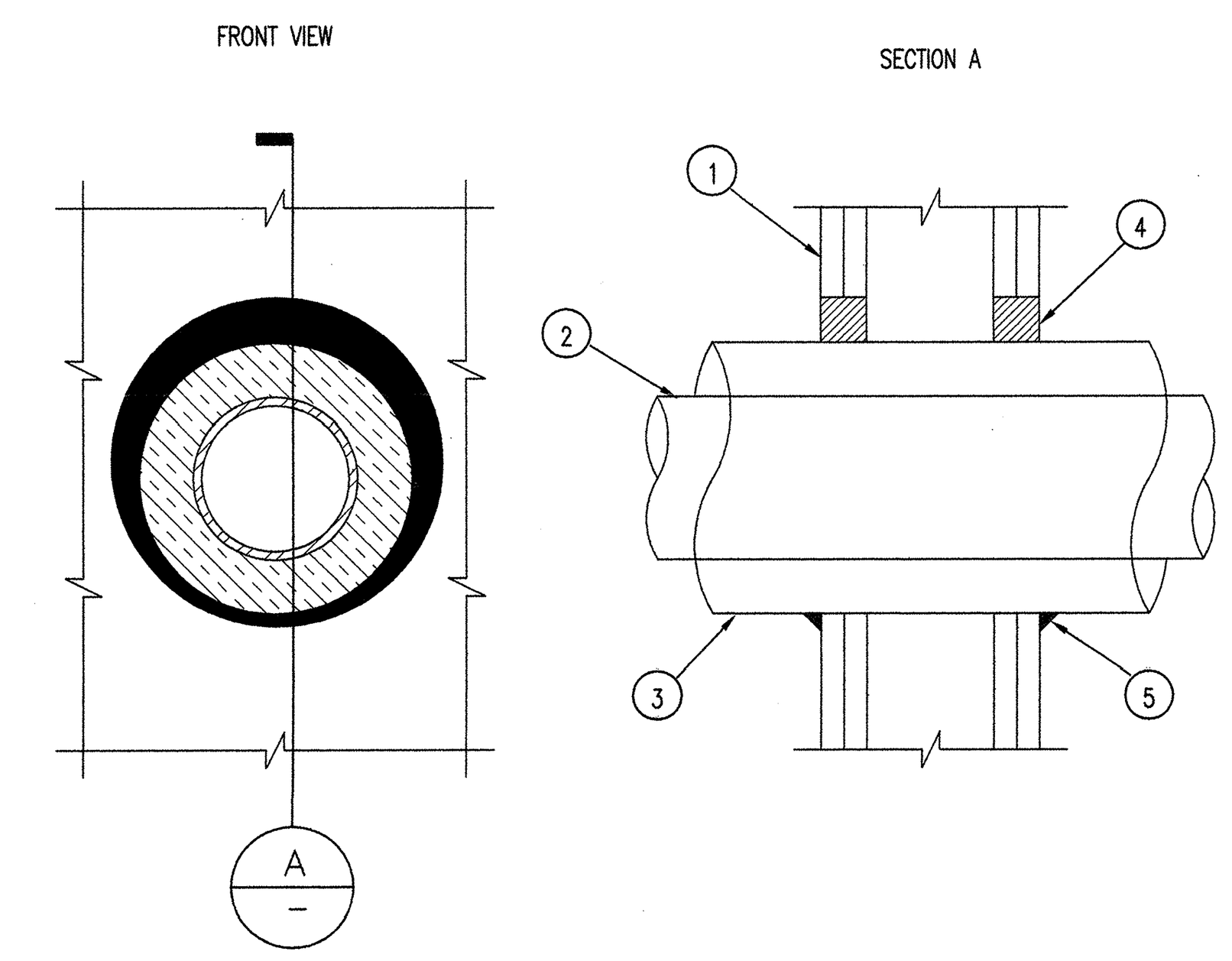

1. GYPSUM WALL ASSEMBLY (UL/ULC CLASSIFIED U300 OR U400 SERIES) (1-HR. OR 2-HR. FIRE-RATING) (2-HR. SHOWN).
2. PENETRATING ITEM TO BE ONE OF THE FOLLOWING :
   A. MAXIMUM 10" NOMINAL DIAMETER STEEL PIPE (SCHEDULE 10 OR HEAVIER).
   B. MAXIMUM 6" NOMINAL DIAMETER COPPER PIPE.
   C. MAXIMUM 4" NOMINAL DIAMETER STEEL CONDUIT.
   D. MAXIMUM 4" NOMINAL DIAMETER EMT.
3. MAXIMUM 2" THICK GLASS FIBER PIPE INSULATION.
4. INTUMESCENT FIRESTOP SEALANT :
   A. MINIMUM 5/8" DEPTH, FOR A 1-HR. FIRE-RATING.
   B. MINIMUM 1-1/4" DEPTH, FOR A 2-HR. FIRE-RATING.
5. MINIMUM 1/2" INTUMESCENT FIRESTOP SEALANT AT POINT OF CONTACT.

NOTES : 1. MAXIMUM DIAMETER OF OPENING = 16".
2. ANNULAR SPACE = MINIMUM 0", MAXIMUM 1-7/8".

INSULATED METAL PIPE THRU. GYP. BD. FIRE WALL — 18

UL # WL5029
SCALE: N.T.S.
4511WL5029

F RATING = 1-HR. OR 2-HR.
T RATING = 0-HR.
L RATING AT AMBIENT = LESS THAN 1 CFM/SQ. FT.
L RATING AT 400°F = 4 CFM/SQ. FT.

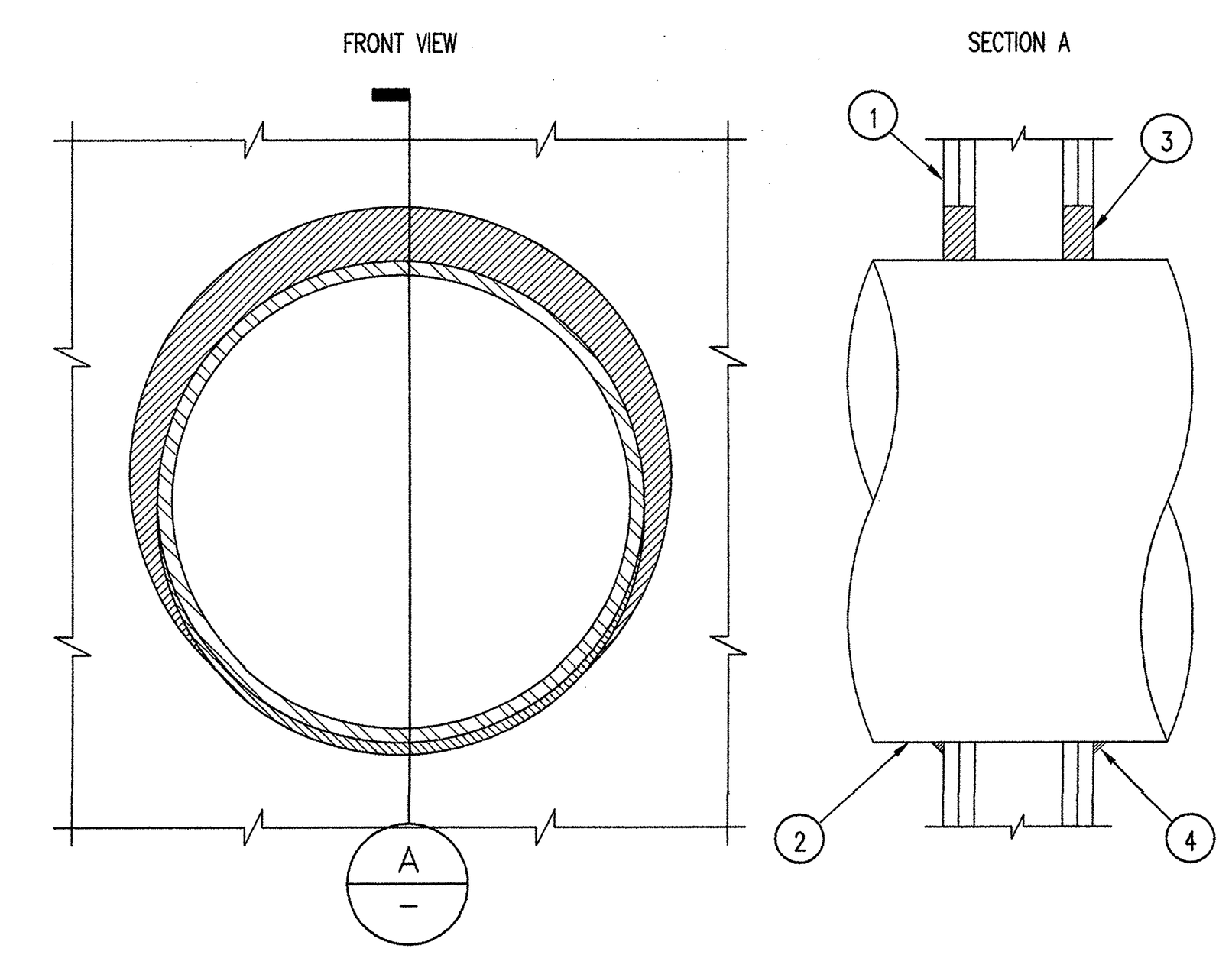

1. GYPSUM WALL ASSEMBLY (UL/ULC CLASSIFIED U300 OR U400 SERIES) (1-HR OR 2-HR FIRE-RATING) (2-HR SHOWN).
2. PENETRATING ITEM TO BE ONE OF THE FOLLOWING:
   A. MAXIMUM 30" NOMINAL DIAMETER STEEL PIPE (SCHEDULE 10 OR HEAVIER).
   B. MAXIMUM 30" NOMINAL DIAMETER CAST IRON PIPE.
   C. MAXIMUM 6" NOMINAL DIAMETER COPPER PIPE.
   D. MAXIMUM 6" NOMINAL DIAMETER STEEL CONDUIT.
   E. MAXIMUM 4" NOMINAL DIAMETER EMT.
3. INTUMESCENT FIRESTOP SEALANT:
   A. MINIMUM 5/8" DEPTH, FOR A 1-HR FIRE-RATING.
   B. MINIMUM 1-1/4" DEPTH, FOR A 2-HR FIRE-RATING.
4. MINIMUM 1/2" BEAD INTUMESCENT FIRESTOP SEALANT AT POINT OF CONTACT.

NOTES : 1. MAXIMUM DIAMETER OF OPENING:
A. 32-1/4" FOR STEEL STUD WALLS.
B. 14-1/2" FOR WOOD STUD WALLS.
2. ANNULAR SPACE = MINIMUM 0", MAXIMUM 2-1/4".

METAL PIPE THRU. GYP. BD. FIRE WALL — 13

UL # WL1054
SCALE: N.T.S.
4511WL1054

F RATING = 2-HR.
T RATING = 1-HR.
L RATING AT AMBIENT = 4 CFM/SQ. FT.
L RATING AT 400°F = LESS THAN 1 CFM/SQ. FT.

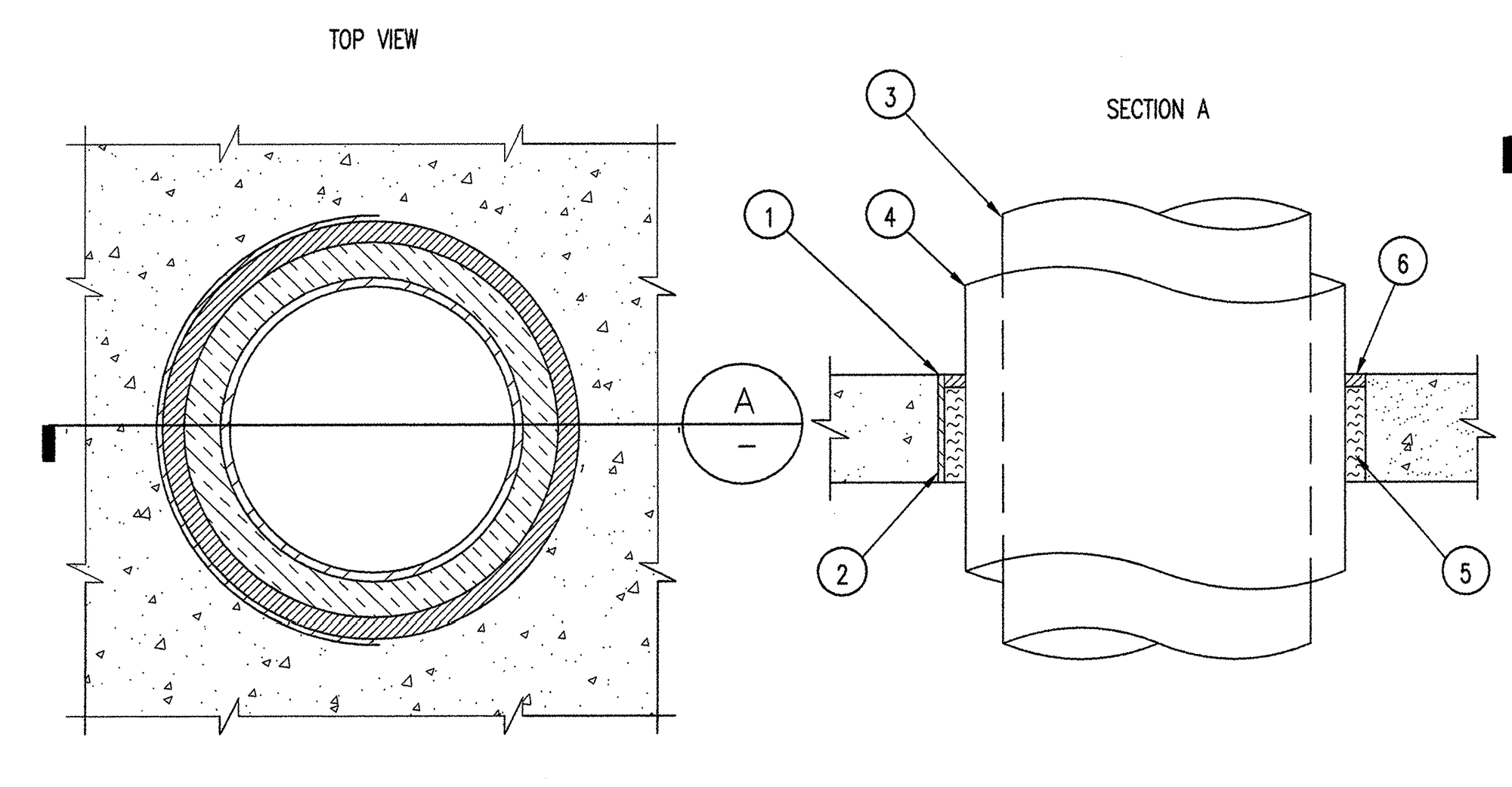

1. CONCRETE FLOOR OR WALL ASSEMBLY (2-HR FIRE-RATING):
   A. LIGHTWEIGHT OR NORMAL WEIGHT CONCRETE FLOOR OR WALL (MINIMUM 4-1/2" THICK).
   B. ANY UL/ULC CLASSIFIED CONCRETE BLOCK WALL.
2. OPTIONAL: MAXIMUM 20" NOMINAL DIAMETER STEEL PIPE SLEEVE (SCHEDULE 10 OR HEAVIER).
3. PENETRATING ITEM TO BE ONE OF THE FOLLOWING:
   A. MAXIMUM 12" NOMINAL DIAMETER STEEL PIPE (SCHEDULE 10 OR HEAVIER).
   B. MAXIMUM 6" NOMINAL DIAMETER COPPER PIPE.
4. MAXIMUM 2" THICK GLASS FIBER INSULATION.
5. MINIMUM 4" THICKNESS MINERAL WOOL (MIN. 4 PCF DENSITY) TIGHTLY PACKED.
6. MINIMUM 1/2" DEPTH INTUMESCENT FIRESTOP SEALANT.

NOTES : 1. MAXIMUM DIAMETER OF OPENING = 20".
2. ANNULAR SPACE = MINIMUM 1/2", MAXIMUM 2-1/4".
3. MINIMUM 1/2" DEPTH INTUMESCENT FIRESTOP SEALANT IS REQUIRED ON BOTH SIDES OF A WALL.

INSULATED METAL PIPE THRU. CONCRETE FLOOR/WALL OR BLOCK WALL — 8

UL #CAJ5091
SCALE: N.T.S.
4511CAJ5091

F RATING = 2-HR.
T RATING = 1-HR.

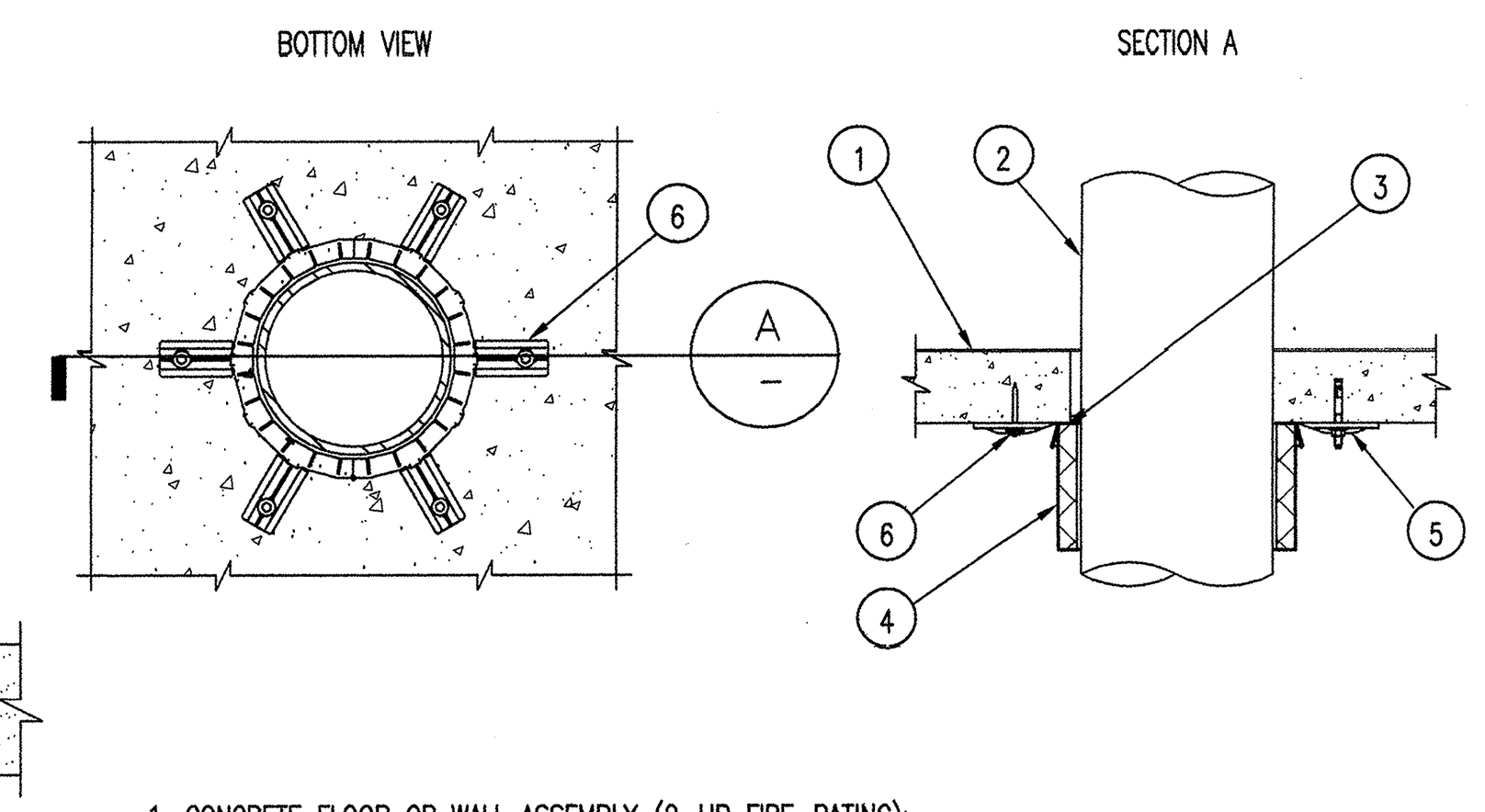

1. CONCRETE FLOOR OR WALL ASSEMBLY (2-HR FIRE-RATING):
   A. LIGHTWEIGHT OR NORMAL WEIGHT CONCRETE FLOOR OR WALL (MIN. 2-1/2" THICK).
   B. ANY UL CLASSIFIED CONCRETE BLOCK WALL.
2. PENETRATING ITEM TO BE ONE OF THE FOLLOWING (ALSO SEE NOTE NO. 3 BELOW):
   A. MAXIMUM 6" NOMINAL DIAMETER PVC PLASTIC PIPE (CELLULAR AND SOLID CORE).
   B. MAXIMUM 6" NOMINAL DIAMETER ABS PLASTIC PIPE (CELLULAR AND SOLID CORE).
   C. MAXIMUM 6" NOMINAL DIAMETER FRPP PLASTIC PIPE.
   D. MAXIMUM 6" NOMINAL DIAMETER CPVC PLASTIC PIPE.
3. MINIMUM 1/2" DEPTH INTUMESCENT FIRESTOP SEALANT.
4. FIRESTOP COLLAR (SEE TABLE BELOW).
5. MOUNTING TAB FOR FIRESTOP COLLAR.
6. POWDER ACTUATED FASTENERS OR 1/4" ANCHORS TO FASTEN EACH MOUNTING TAB.

PIPE DIAMETER	NO. OF MOUNTING TABS	MAX. HOLE SIZE
1-1/2"	2	2-1/8"
2"	2	2-5/8"
3"	3	4"
4"	3	5"
6"	6	7"

NOTES : 1. FIRESTOP COLLARS ARE REQUIRED ON BOTH SIDES OF A WALL ASSEMBLY.
2. ANNULAR SPACE = MINIMUM 0", MAXIMUM 1/2".
3. CLOSED OR VENTED PIPING SYSTEMS. (PVC, ABS, FRPP = SCHEDULE 40, CPVC = SDR 17).

PLASTIC PIPE THRU. CONCRETE FLOOR/WALL OR BLOCK WALL — 3

UL # CAJ2271
SCALE: N.T.S.
4511CAJ2271

System No. HW-D-0106
Assembly Ratings – 1 and 2 Hr (See Items 2 and 3)
Nominal Joint Width – 2 in.
Class II Movement Capabilities – 20% Compression or Extension

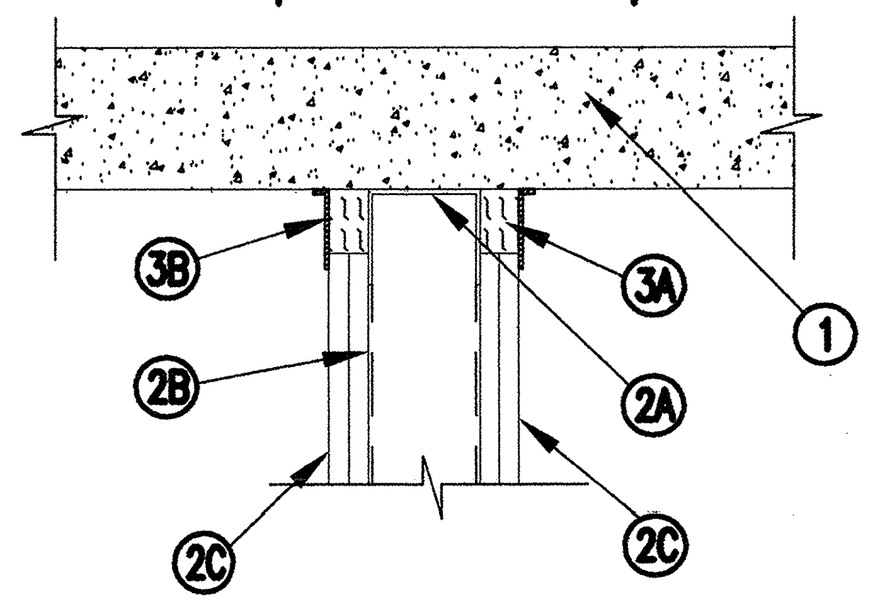

1. Floor Assembly Min 4-1/2 in. thick steel-reinforced lightweight or normal weight (100-150 pcf) structural concrete.
2. Wall Assembly The 1 or 2 hr fire-rated gypsumboard /stud wall assembly shall be constructed of the materials and in the manner specified in the individual U400 Series Wall or Partition Design in the UL Fire Resistance Directory and shall include the following construction features:
   A. Steel Floor and Ceiling Runners Floor and ceiling runners of wall assembly shall consist of min No. 25 gauge galv steel channels sized to accommodate steel studs (Item 2B). Ceiling runner to be provided with 3 in. flanges. Ceiling runner secured with steel fasteners or by welds spaced 12 in. OC.
   A1. Light Gauge Framing*-Slotted Ceiling Runner As an alternate to the ceiling runner in Item 2A, slotted ceiling runner to consist of galv steel channel with slotted flanges sized to accommodate steel studs (Item 2B). Slotted ceiling runner installed with steel fasteners spaced max 24 in. OC.
   SLIPTRACK SYSTEMS INC – SLP-TRK
   A2 . Light Gauge Framing*-Vertical Deflection Ceiling Runner As an alternate to the ceiling runners in Items 2A and 2A1, vertical deflection ceiling runner to consist of galv steel channel with slotted vertical deflection clips mechanically fastened within runner. Slotted clips, provided with step bushings, for permanent fastening of steel studs. Flanges sized to accommodate steel studs (Item 2B). Vertical deflection ceiling runner installed with steel fasteners spaced max 24 in. OC.
   THE STEEL NETWORK INC – VertiTrack VTD250, VTD358, VTD400, VTD600 and VTD800

System No. HW-D-0106
Assembly Ratings – 1 and 2 Hr (See Items 2 and 3)
Nominal Joint Width – 2 in.
Class II Movement Capabilities – 20% Compression or Extension

   B. Studs Steel studs to be min 2-1/2 in. wide. Studs cut 1/2 to 3/4 in. less in length than assembly height with bottom nesting in and resting on floor runner and with top nesting in ceiling runner without attachment. When slotted ceiling runner (Item 2A1) is used, steel studs secured to slotted ceiling runner with No. 8 by 1/2 in. long wafer head steel screws at midheight of slot on each side of wall. Stud spacing not to exceed 24 in. OC. When vertical deflection ceiling runner (Item 2A2) is used, steel studs secured to slotted vertical deflection clips, through the bushings, with steel screws at midheight of each slot. Stud spacing not to exceed 24 in. OC .
   C. Gypsum Board* Gypsumboard installed to a min total thickness of 5/8 or 1-1/4 in. on each side of wall, for 1 or 2 hr fire resistance rated walls, respectively. Wall to be constructed as specified in the individual U400 Series Design in the UL Fire Resistance Directory, except that a nominal 2 in. gap shall be maintained between the top of the gypsumboard and the bottom of concrete floor. The screws attaching the gypsumboard to the studs at the top of the first layer shall be located 4 in. from the floor assembly. The screws attaching the second layer to the steel studs shall be located 3-1/2 in. from the floor assembly. The hourly fire rating of the joint system is dependent on the hourly rating of the wall.
3. Joint System Max width of joint (at time of installation of joint system) is 2 in. The joint system is designed to accommodate a max 20 percent compression or extension from its installed width. The joint system shall consist of the following:
   A. Forming Material * Min 4 pcf mineral wool batt insulation cut into strips 5/8 or 1-1/4 in. thick for 1 and 2 Hr rated assemblies, respectively. Strips cut to width compressed 33 percent in width and firmly packed into gap between top of the gypsumboard and bottom of the floor assembly, flush with both surfaces of the wall. Adjoining lengths of batt to be tightly butted with butted seams spaced min 48 in. apart along the length of the joint.
   ROCK WOOL MANUFACTURING CO – Delta Board
   B. Fill, Void or Cavity Material* Min 1/8 in. wet thickness of fill material sprayed or trowled on each side of the wall to completely cover mineral wool forming material and to overlap a min 1/2 in. onto the gypsumboard and concrete floor assembly.
   HILTI CONSTRUCTION CHEMICALS, DIV OF
   HILTI INC – CP672 Firestop Spray
*Bearing the UL Classification Mark

RATED GYP. BOARD WALL (HEAD) — 19

SCALE: N.T.S.

F RATING = 1-HR. OR 2-HR.
T RATING = 1-HR. OR 2-HR.

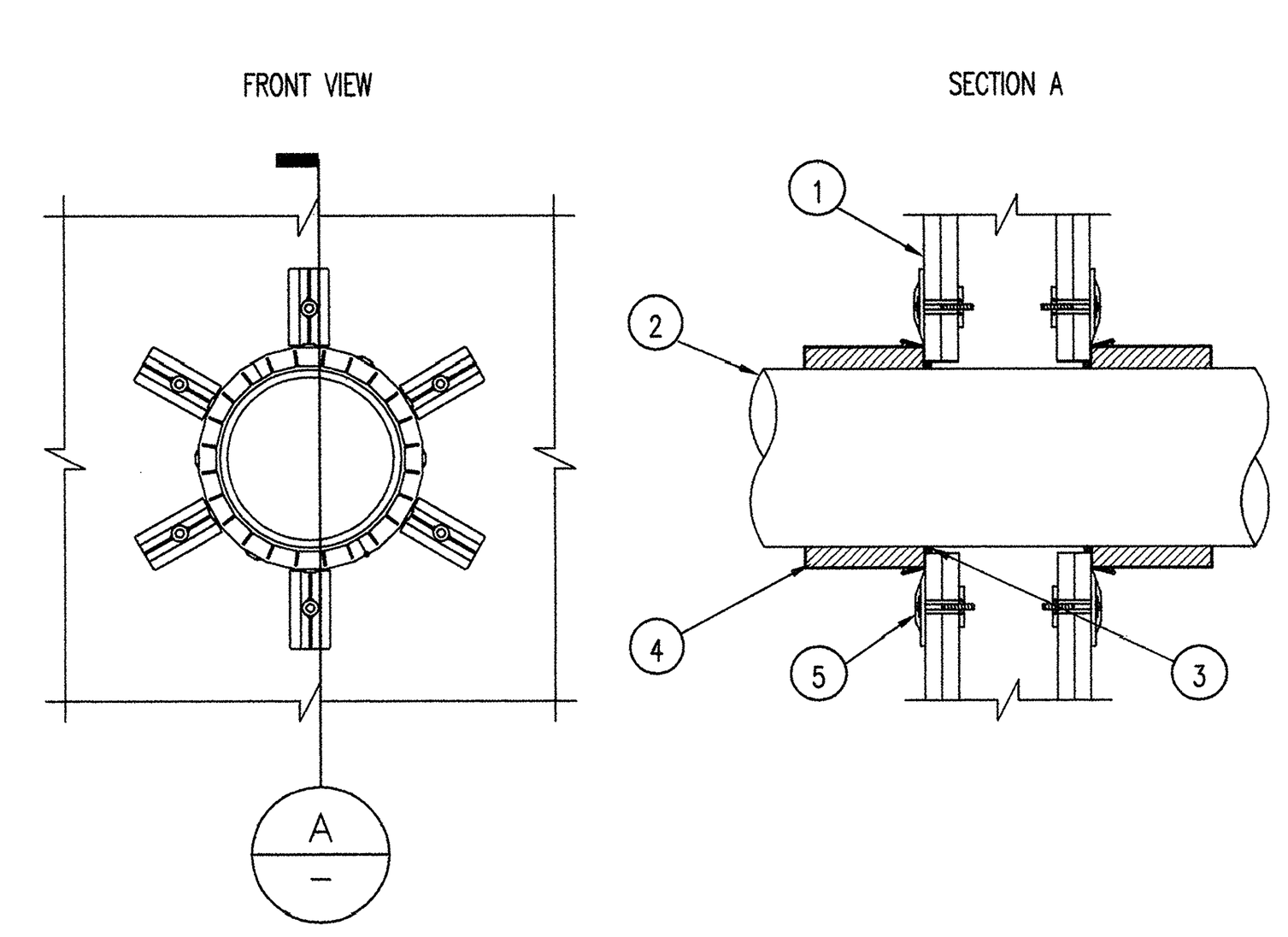

1. GYPSUM WALL ASSEMBLY (U.L. CLASSIFIED U300 OR U400 SERIES) (1-HR OR 2-HR FIRE-RATING) (2-HR SHOWN).
2. PENETRATING ITEM TO BE ONE OF THE FOLLOWING (SEE NOTE NO. 3 BELOW):
   A. MAXIMUM 6" NOMINAL DIAMETER PVC PLASTIC PIPE (CELLULAR OR SOLID CORE).
   B. MAXIMUM 6" NOMINAL DIAMETER ABS PLASTIC PIPE (CELLULAR OR SOLID CORE).
   C. MAXIMUM 6" NOMINAL DIAMETER FRPP PLASTIC PIPE.
   D. MAXIMUM 6" NOMINAL DIAMETER CPVC PLASTIC PIPE.
3. SEE NOTE NO. 1 BELOW.
4. FIRESTOP COLLAR (SEE TABLE BELOW).
5. FASTEN EACH MOUNTING TAB TO WALL ASSEMBLY WITH TOGGLER BOLT.

PIPE DIAMETER	NO. OF MOUNTING TABS	MAX. HOLE SIZE
1-1/2"	2	2-1/8"
2"	2	2-5/8"
3"	3	4"
4"	3	5"
6"	6	7"

NOTES : 1. TO IMPEDE COLD SMOKE, PROVIDE 1/4" DEPTH INTUMESCENT FIRESTOP SEALANT IN ANNULAR SPACE AROUND PLASTIC PIPE.
2. ANNULAR SPACE = MINIMUM 0", MAXIMUM 1/2".
3. CLOSED OR VENTED PIPING SYSTEMS. (ABS, PVC, FRPP = SCHEDULE 40, CPVC= SDR 17).

PLASTIC PIPE THRU. GYP. BD. FIRE WALL — 15

UL # WL2078
SCALE: N.T.S.
4511WL2078

F RATING = 2-HR.
T RATING = 0-HR.
L RATING AT AMBIENT = 4 CFM/SQ. FT.
L RATING AT 400° F = LESS THAN 1 CFM/SQ. FT.

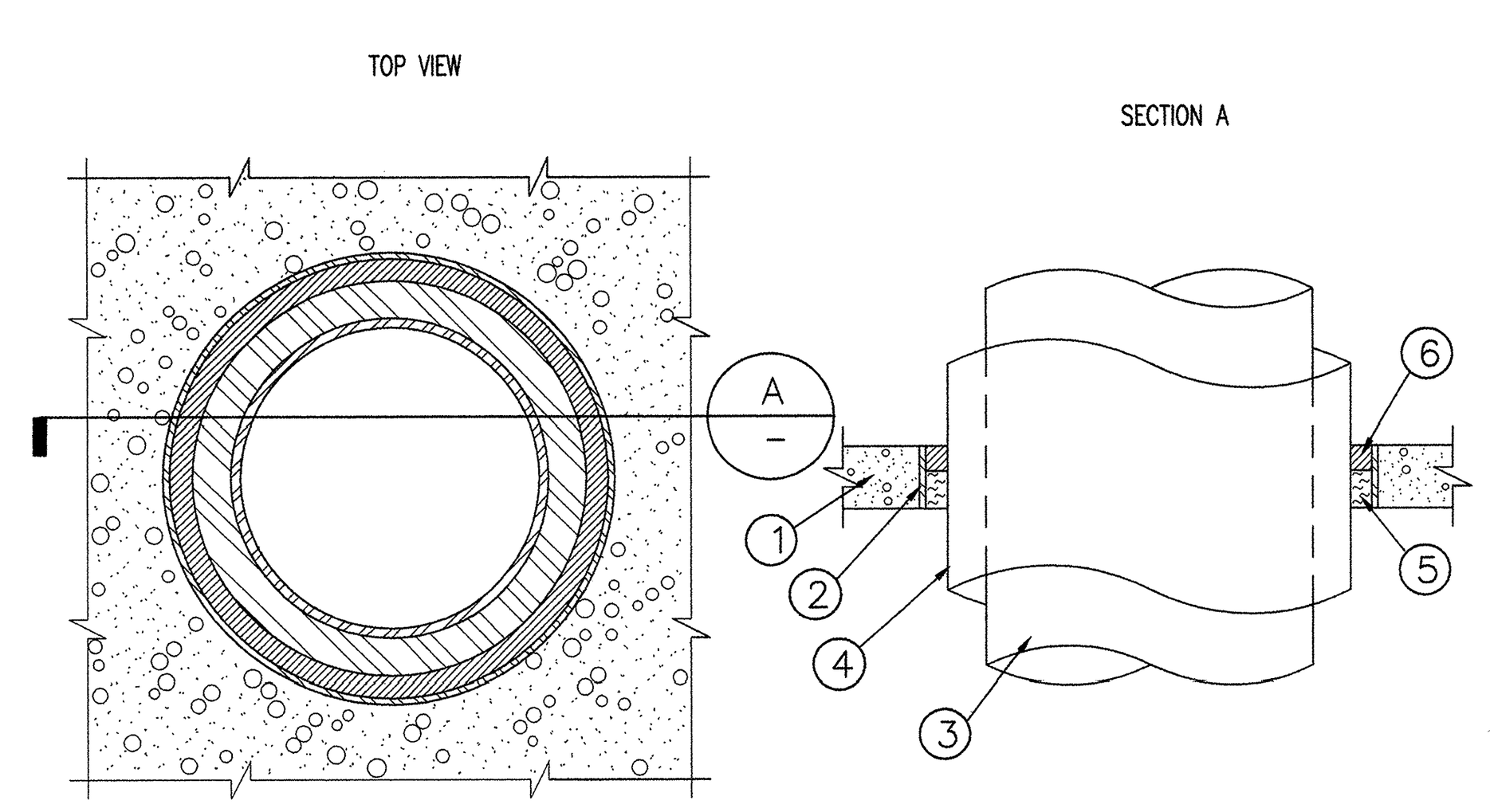

1. CONCRETE FLOOR OR WALL ASSEMBLY (2-HR. FIRE-RATING):
   A. LIGHTWEIGHT OR NORMAL WEIGHT CONCRETE FLOOR OR WALL (MIN. 2-1/2" THICK).
   B. ANY UL/ULC CLASSIFIED CONCRETE BLOCK WALL.
2. OPTIONAL : MAXIMUM 18" NOMINAL DIAMETER STEEL PIPE SLEEVE (SCHEDULE 10 OR HEAVIER).
3. PENETRATING ITEM TO BE ANY ONE OF THE FOLLOWING:
   A. MAXIMUM 12" NOMINAL DIAMETER STEEL PIPE (SCHEDULE 10 OR HEAVIER).
   B. MAXIMUM 6" NOMINAL DIAMETER COPPER PIPE.
4. MAXIMUM 1-1/2" THICK GLASS FIBER PIPE INSULATION.
5. MINIMUM 1-1/2" THICKNESS MINERAL WOOL (MIN. 4 PCF DENSITY) TIGHTLY PACKED.
6. MINIMUM 1" DEPTH INTUMESCENT FIRESTOP SEALANT.

NOTES : 1. MAXIMUM DIAMETER OF OPENING = 18".
2. ANNULAR SPACE = MINIMUM 1/2", MAXIMUM 1-7/8".
3. MINIMUM 1" DEPTH INTUMESCENT FIRESTOP SEALANT IS REQUIRED ON BOTH SIDES OF A WALL ASSEMBLY.

INSULATED METAL PIPE THRU. CONCRETE FLOOR/WALL OR BLOCK WALL — 10

UL #CAJ5096
SCALE: N.T.S.
4511CAJ5096

F RATING = 3-HR.
T RATING = 0-HR, 1/2-HR, & 3/4-HR.

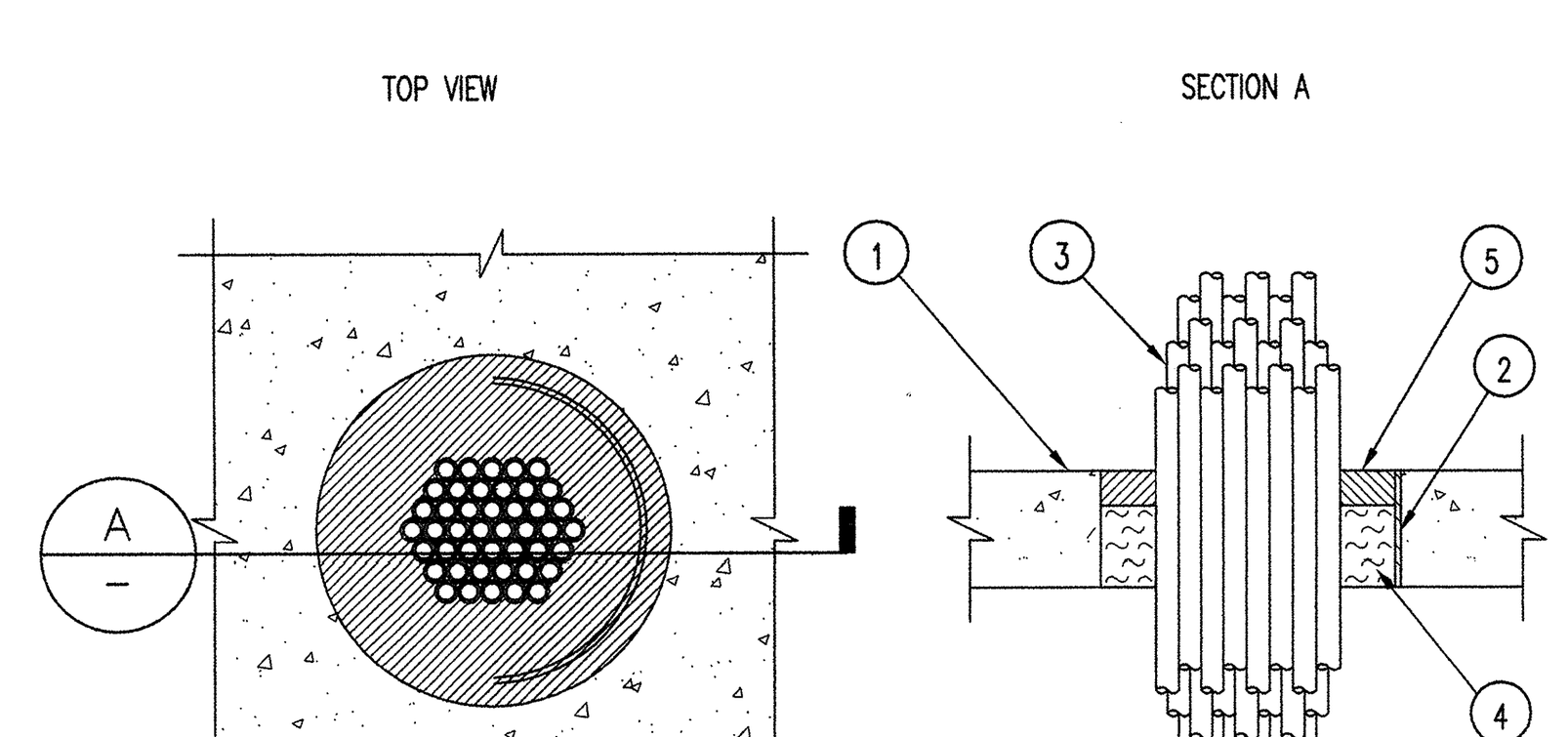

1. CONCRETE FLOOR OR WALL ASSEMBLY (3-HR FIRE-RATING):
   A. LIGHTWEIGHT OR NORMAL WEIGHT CONCRETE FLOOR (MIN. 2-1/2" THICK).
   B. LIGHTWEIGHT OR NORMAL WEIGHT CONCRETE WALL (MIN. 3" THICK).
   C. ANY UL/ULC CLASSIFIED CONCRETE BLOCK WALL.
2. OPTIONAL: MAXIMUM 6" NOMINAL DIAMETER STEEL PIPE SLEEVE (SCHEDULE 10 OR HEAVIER).
3. MAXIMUM 4" DIAMETER CABLE BUNDLE TO BE A COMBINATION OF ANY OF THE FOLLOWING:
   A. MAXIMUM 300 PAIR NO. 24 AWG TELEPHONE CABLE WITH PVC JACKET.
   B. MAXIMUM 500 KCMIL POWER CABLE WITH PVC JACKET.
   C. MAXIMUM 7/C NO. 12 AWG POWER CABLE WITH PVC JACKET.
   D. MAXIMUM (24 FIBER) 1/2" DIAMETER FIBER-OPTIC CABLE.
   E. MAXIMUM 3/C NO. 12 AWG METAL-CLAD CABLE.
4. MINIMUM 2" THICKNESS MINERAL WOOL (MIN. 4 PCF DENSITY) TIGHTLY PACKED.
5. MINIMUM 1/2" DEPTH INTUMESCENT FIRESTOP SEALANT.

NOTES : 1. MAXIMUM DIAMETER OF OPENING = 6".
2. CABLES TO FILL MINIMUM 25%, TO MAXIMUM 45% OF CROSS-SECTIONAL AREA OF OPENING.
3. MINIMUM 1/2" DEPTH INTUMESCENT FIRESTOP SEALANT IS REQUIRED ON BOTH SIDES OF A WALL.

SINGLE OR MULTIPLE CABLES THRU. CONCRETE FLOOR/WALL OR BLOCK WALL — 4

UL # CAJ3095
SCALE: N.T.S.
4511CAJ3095

ARCHITECTURE
INTERIOR DESIGN
PLANNING

CARRIER JOHNSON

GORDON R. CARRIER AIA
MICHAEL C. JOHNSON AIA

WILLIAM C. BOCKEN AIA
DEBORAH P. ELLIOTT IIDA

2600 MICHELSON DRIVE
SUITE 400
IRVINE, CALIFORNIA
92612

TEL 949 955-2353
FAX 949 955-2377

1301 THIRD AVENUE
SAN DIEGO, CALIFORNIA
92101

TEL 619 239-2353
FAX 619 239-6227

RECORD DOCUMENTS
THESE DOCUMENTS RELEASED BY CARRIER JOHNSON FOR USE AS RECORD DOCUMENTS WILL SHOW THE REPORTED LOCATION OF THE WORK AND SIGNIFICANT CHANGES MADE DURING THE CONSTRUCTION PROCESS, AND ARE BASED ON UNVERIFIED INFORMATION PROVIDED BY THE CONTRACTOR AND OTHER PARTIES WHICH WILL BE ASSUMED RELIABLE. CARRIER JOHNSON CANNOT AND DOES NOT WARRANT THE ACCURACY AND/OR COMPLETENESS OF THIS INFORMATION AND SHALL NOT BE RESPONSIBLE FOR ANY ERRORS OR OMISSIONS WHICH MAY BE INCORPORATED THEREIN AS A RESULT. FUTURE CONSTRUCTION PLANNING MUST INCLUDE FIELD CONFIRMATION OF EXISTING CONDITIONS.

ONTARIO PD:: TEMPORARY HOLDING AREA

2534 S. ARCHIBALD AVE., ONTARIO, CALIFORNIA 91761

B.O.C. Re-Submittal 07.30.03
F13 Field Order #13 07.01.03
F9 Bldg. Dept./B.O.C. Re-Submittal 06.06.2003

ISSUES:
DIRECTORY/FILE NUMBER: 4511.00
XREF'S DRAWINGS:
PROJECT NUMBER: 4511.00
DRAWN BY: CHECKED BY:
DATE:
SCALE: AS NOTED
TITLE: DETAILS

DRAWING NO: A8.0.3H

ROOM FINISH MATERIAL AND COLOR SCHEDULE

ROOM NUMBER	ROOM NAME	FLOOR	BASE	WAINSCOT	NORTH WALL	EAST WALL	SOUTH WALL	WEST WALL	CEILING	DOOR/FRAME COLOR	REMARKS
4301	VESTIBULE	SC	RB		EP	EP	EP	EP	ACT		
4302	LG. INT./ VISIT ROOM	SC	RB		EP	EP	EP	EP	ACT		
4311	JANITOR	SC	RB		EP	EP	EP	EP	GB.		
4312	ISOLATION CELL	SC	RB		EP	EP	EP	EP	GB.		
4313	OFFICER CONTROL AREA	SC	RB		EP	EP	EP	EP	ACT		
4314	PROP. STORAGE	SC	RB		EP	EP	EP	EP	ACT		
4315	ADULT PHOTO	SC	RB		EP	EP	EP	EP	ACT		
4316	F. PRINT/ LIVESCAN	SC	RB		EP	EP	EP	EP	ACT		
4317	JUEVENILE PHOTO	SC	RB		EP	EP	EP	EP	ACT		
4318	OFFICER CONTROL AREA	SC	RB		EP	EP	EP	EP	ACT		
4319	JUEVENILE BOOKING	SC	RB		EP	EP	EP	EP	ACT		
4321	JUEVENILE TEMP. HOLDING	SC	RB		EP	EP	EP	EP	GB.		
4322	JUEVENILE TEMP HOLDING	SC	RB		EP	EP	EP	EP	GB.		
4323	JUEVENILE SEARCH	SC	RB		EP	EP	EP	EP	ACT		
4324	DRE. ROOM	SC	RB		EP	EP	EP	EP	ACT		
4325	INTOX. ROOM	SC	RB		EP	EP	EP	EP	ACT		
4326	ADULT SEARCH	SC	RB		EP	EP	EP	EP	ACT		
4327	TOILET	CT	–	FULL HT.	–	–	–	–	GB.		
4328	ADULT BOOKING	SC	RB		EP	EP	EP	EP	ACT		
4329	SOBER CELL	PAD	RB		EP	EP	EP	EP	GB.		
4331	MEN'S TEMP. HOLDING	SC	RB		EP	EP	EP	EP	GB.		
4332	WOMEN'S TEMP. HOLDING	SC	RB		EP	EP	EP	EP	GB.		
4333	TEMP. HOLDING	SC	RB		EP	EP	EP	EP	GB.		
4334	TEMP. INT./ VISIT ROOM	SC	RB		EP	EP	EP	EP	ACT		
4335	WORK AREA	SC	RB		EP	EP	EP	EP	ACT		

NOTES:

1. ALL CELL PADDING MATERIALS SHALL BE STATE FIRE MARSHAL APPROVED AND LISTED.

ABBREVIATIONS:

EP = EPOXY PAINT
PAD = SAFETY PADDING
ACT = ACOUSTICAL TILE CEILING GRID
RB = RUBBER BASE
GB = EPOXY PAINTED GYPSUM BOARD
CT = CERAMIC TILE
SC = SEALED CONCRETE
TYPE — CLEAR SEALER
FINISH — HIGH GLOSS

DOOR AND FRAME SCHEDULE

NUMBER	DOOR SIZE	DOOR TYPE	DOOR MATERIAL	DOOR FINISH	FRAME MATERIAL	FRAME FINISH	FIRE RATING (IN MINUTES)	HARDWARE GROUP	GASKETING	ELECTRICAL	REMARKS
FIRST FLOOR - TEMPORARARY HOLDING AREA											
4301	3'-4" X 6'-8"	E	HM	PT	HM	PT	–	47	–	–	
4302	3'-0" X 6'-8"	B	HM	PT	HM	PT	–	47	–	–	
4302A	3'-0" X 6'-8"	B	HM	PT	HM	PT	–	48	–	–	
4308A	3'-0" X 6'-8"	C	HM	PT	HM	PT	90	50	–	–	
4311	3'-0" X 6'-8"	B	HM	PT	HM	PT	–	49	–	–	
4312	3'-4" X 6'-8"	A*	HM	PT	HM	PT	–	*	–	–	* SPEC. SECTIONS 11191 & 11194
4316	3'-0" X 6'-8"	B	HM	PT	HM	PT	–	44	–	–	
4316A	3'-0" X 6'-8"	B	HM	PT	HM	PT	–	44	–	–	
4318	3'-4" X 6'-8"	E	HM	PT	HM	PT	–	45	–	–	
4321	3'-4" X 6'-8"	A*	HM	PT	HM	PT	–	*	–	–	* SPEC. SECTIONS 11191 & 11194
4322	3'-4" X 6'-8"	A*	HM	PT	HM	PT	–	*	–	–	* SPEC. SECTIONS 11191 & 11194
4323	3'-4" X 6'-8"	E	HM	PT	HM	PT	–	44	–	–	
4324	3'-0" X 6'-8"	B	HM	PT	HM	PT	–	45	–	–	
4324A	3'-0" X 6'-8"	B	HM	PT	HM	PT	–	45	–	–	
4325	3'-0" X 6'-8"	B	HM	PT	HM	PT	–	45	–	–	
4325A	3'-0" X 6'-8"	B	HM	PT	HM	PT	–	45	–	–	
4326	3'-4" X 6'-8"	E	HM	PT	HM	PT	–	45	–	–	
4327	3'-0" X 6'-8"	C	HM	PT	HM	PT	–	46	–	–	
4329	3'-4" X 6'-8"	A*	HM	PT	HM	PT	–	*	–	–	* SPEC. SECTIONS 11191 & 11194
4331	3'-4" X 6'-8"	A*	HM	PT	HM	PT	–	*	–	–	* SPEC. SECTIONS 11191 & 11194
4332	3'-4" X 6'-8"	A*	HM	PT	HM	PT	–	*	–	–	* SPEC. SECTIONS 11191 & 11194
4333	3'-4" X 6'-8"	A*	HM	PT	HM	PT	–	*	–	–	* SPEC. SECTIONS 11191 & 11194
4334	3'-0" X 6'-8"	B	HM	PT	HM	PT	–	47	–	–	
THE FOLLOWING DOORS ARE SHOWN FOR REFERENCE											
4301A	3'-0" X 7'-0"	B2	HM	PT	HM	PT	90	15	CR	3, 7	
4323B	3'-0" X 7'-0"	B2	HM	PT	HM	PT	90	40	CR	2, 3	
4326B	3'-0" X 7'-0"	B2	HM	PT	HM	PT	90	40	CR	2, 3	

DOOR TYPES

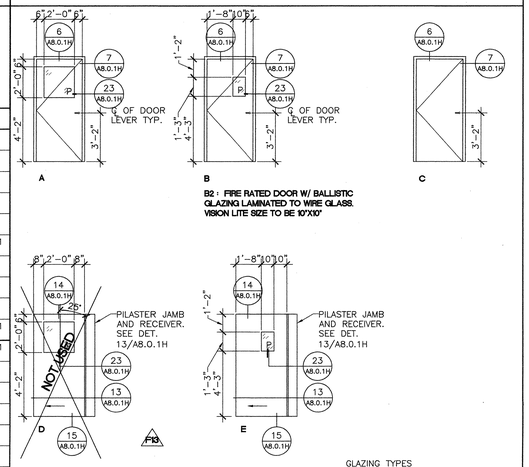

B2 : FIRE RATED DOOR W/ BALLISTIC GLAZING LAMINATED TO WIRE GLASS. VISION LITE SIZE TO BE 10"X10"

GLAZING TYPES
P IMPACT RESISITANT GLAZING

DOOR AND FRAME ABBREVIATIONS

AL = ALUMINUM
ANO = ANODIZED
CR = CARD READER
EX = EXISTING
G = GLASS
HM = HOLLOW METAL
MDF = MEDIUM DENSITY—PAINT GRADE
PT = PAINT
PR = PAIR
SC = SOLID CORE WOOD; BIRCH
SS = STAINLESS STEEL
ST = WEYERHAEUSER; AUTUMN
T = TEMPERED
WG = WIRE GLASS

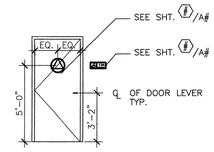

ROOM + TOILET SIGN LOCATION

GENERAL NOTES

1. VERIFY WIDTH OF SIDELIGHTS AND DOOR/WINDOW FRAME THROAT SIZES IN FIELD PRIOR TO PLACING ORDER.
2. ALL OTHER DOOR HARDWARE & DEVICES SHALL BE SATIN/BRUSHED STAINLESS STEEL OR APPROVED EQUAL.
3. CONTRACTOR TO COORDINATE KEYING/CYLINDER SYSTEM WITH OWNER.
4. ALL ELECTRIFIED LOCK SETS FIGURED AS FAIL SAFE TYPE.
5. ALL PAINTED DOORS TO BE P-1, SEMI-GLOSS.
6. ALL FIRE RATED DOORS SHALL BE POSITIVE LATCHING AND SELF-CLOSING..
7. FIRE RATED DOOR FRAMES SHALL BE INSTALLED STRICTLY IN ACCORDANCE WITH MANUFACTURER'S PRINTED INSTRUCTIONS. MANUFACTURER'S PRINTED INSTRUCTIONS SHALL BE MADE AVAILABLE TO THE INSPECTING AUTHORITY.

THE FOLLOWING NOTESFERE TO DOORS 4301A, 4323B, & 4326B

2. PAINT DOOR/HOLLOW METAL FRAME TO MATCH ADJACENT SURFACE; SEMI GLOSS FINISH.
3. PROVIDE 10" KICK PLATE ON BOTH SIDES OF DOOR/S.
7. PAINT HOLLOW METAL FRAME TO MATCH ALUM. CLEAR ANODIZED.

WINDOW SCHEDULE

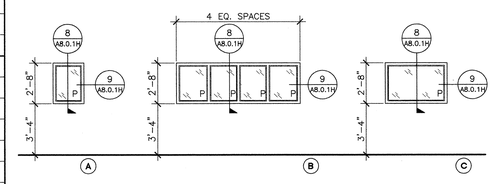

GLAZING TYPES
P IMPACT RESISITANT GLAZING

ARCHITECTURE
INTERIOR DESIGN
PLANNING

CARRIER JOHNSON

GORDON R. CARRIER AIA
MICHAEL C. JOHNSON AIA

WILLIAM C. BOCKEN AIA
DEBORAH P. ELLIOTT IIDA

2600 MICHELSON DRIVE
SUITE 400
IRVINE, CALIFORNIA
92612

TEL 949 955-2353
FAX 949 955-2377

1301 THIRD AVENUE
SAN DIEGO, CALIFORNIA
92101

TEL 619 239-2353
FAX 619 239-6227

RECORD DOCUMENTS
THESE DOCUMENTS RELEASED BY CARRIER JOHNSON FOR USE AS RECORD DOCUMENTS WILL SHOW THE REPORTED LOCATION OF THE WORK AND SIGNIFICANT CHANGES MADE DURING CONSTRUCTION AS REPORTED TO THE ARCHITECT. UNVERIFIED INFORMATION PROVIDED BY THE CONTRACTOR AND OTHER PARTIES WHICH WILL BE ASSUMED RELIABLE AND ACCURATE BUT NOT VERIFIED BY THE ARCHITECT FOR ACCURACY AND/OR COMPLETENESS OF THIS INFORMATION AND SHALL NOT BE RESPONSIBLE FOR ANY ERRORS OR OMISSIONS WHICH MAY BE INCORPORATED THEREIN AS A RESULT OF RELIANCE ON SUCH INFORMATION. THIS FAILURE FIELD CONFIRMATION OF EXISTING CONDITIONS.

ONTARIO PD:: TEMPORARY HOLDING AREA

2534 S. ARCHIBALD AVE., ONTARIO, CALIFORNIA 91761

B.O.C. Re-Submittal 07.30.03
Field Order #13 07.01.03
Bldg. Dept./B.O.C. Re-Submittal 06.06.2003

ISSUES:
DIRECTORY/FILE NUMBER: 4511-A903
XREF'S DRAWINGS:
PROJECT NUMBER: 4511.00
DRAWN BY: CHECKED BY:
DATE: 3/26/03
SCALE: 1/4"=1'-0"
TITLE: SCHEDULES, DOORS, FRAMES, & DOOR TYPES

DRAWING NO:
A9.0.1H

ALL IDEAS, DESIGN ARRANGEMENTS AND PLANS INDICATED OR REPRESENTED BY THIS DRAWING ARE OWNED BY AND THE PROPERTY OF CARRIER JOHNSON AND WERE CREATED, EVOLVED AND DEVELOPED FOR USE ON, AND IN CONNECTION WITH THE PROJECT SPECIFICALLY DESCRIBED HEREIN. NONE OF SUCH IDEAS, DESIGNS, ARRANGEMENTS OR PLANS SHALL BE USED BY, OR DISCLOSED TO ANY PERSON, FIRM, OR CORPORATION FOR ANY PURPOSE WHATSOEVER WITHOUT THE WRITTEN PERMISSION OF CARRIER JOHNSON. FILING THESE DRAWINGS OR SPECIFICATIONS WITH ANY PUBLIC AGENCY IS NOT A PUBLICATION OF SAME. NO COPYRIGHT; REPRODUCTION OR USE THEREOF IS PERMISSIBLE WITHOUT THE CONSENT OF CARRIER JOHNSON.

GENERAL

1. THE CONTRACTOR SHALL VERIFY ALL DIMENSIONS AND SITE CONDITIONS AND COORDINATE ALL DETAILS AND DIMENSIONS SHOWN ON THE STRUCTURAL DRAWINGS WITH RELATED REQUIREMENTS ON ARCHITECTURAL, MECHANICAL, ELECTRICAL AND/OR CIVIL DRAWINGS. THE ARCHITECT OR ENGINEER SHALL BE NOTIFIED OF ANY DISCREPANCIES PRIOR TO STARTING WORK.
2. WHERE A CONFLICT OCCURS BETWEEN THE SPECIFICATIONS, NOTES ON THE DRAWINGS, GENERAL NOTES AND SPECIFIC DETAILS, THE MORE RESTRICTIVE SHALL GOVERN.
3. ALL MATERIAL AND WORKMANSHIP SHALL CONFORM TO THE UNIFORM BUILDING CODE, 1997 EDITION, WITH CALIFORNIA BUILDING CODE AMENDMENTS (UBC).
4. DO NOT SCALE DRAWINGS.
5. THE DESIGN, ADEQUACY AND SAFETY OF ERECTION BRACING, SHORING, TEMPORARY SUPPORTS, ETC., IS THE SOLE RESPONSIBILITY OF THE CONTRACTOR AND HAS NOT BEEN CONSIDERED BY THE STRUCTURAL ENGINEER. THE CONTRACTOR IS RESPONSIBLE FOR THE STABILITY OF THE STRUCTURE PRIOR TO THE APPLICATION OF ALL PERMANENT LATERAL BRACING, ROOF AND FLOOR DIAPHRAGMS AND FINISH MATERIALS. THE CONTRACTOR SHALL PROVIDE THE NECESSARY BRACING TO INSURE STABILITY PRIOR TO THE APPLICATION OF THE AFOREMENTIONED MATERIALS. OBSERVATION VISITS TO THE SITE BY THE STRUCTURAL ENGINEER SHALL NOT INCLUDE THE INSPECTION OF THE ABOVE ITEMS.
6. VIBRATIONAL EFFECTS OF MECHANICAL EQUIPMENT ARE ASSUMED TO BE NEGLIGIBLE TO STRUCTURAL MEMBERS, SEE MECHANICAL DRAWINGS FOR REQUIRED VIBRATION ISOLATORS.
7. IT SHALL BE THE RESPONSIBILITY OF THE CONTRACTOR TO LOCATE ALL EXISTING UTILITIES WHETHER SHOWN HEREON OR NOT, AND TO PROTECT THEM FROM DAMAGE. THE CONTRACTOR SHALL BEAR ALL EXPENSE OF REPAIR OR REPLACEMENT IN CONJUNCTION WITH THE PERFORMANCE OF THIS WORK.
8. DIMENSIONS AND LOCATIONS OF ALL DOOR AND WINDOW OPENINGS SHALL BE DICTATED BY THE ARCHITECTURAL DRAWINGS. FLOOR, WALL AND ROOF OPENINGS AS REQUIRED BY OTHER TRADES SHALL BE VERIFIED FROM SHOP DRAWINGS, EQUIPMENT DATA, ETC.
9. ITEMS IDENTIFIED BY A TRADE NAME ARE INDICATIVE OF A LEVEL OF PERFORMANCE OR A GRADE OF MATERIAL. IN ALL SUCH CASES, THE PHRASE "OR APPROVED EQUAL" SHALL APPLY.
10. BACKFILL SHALL NOT BE PLACED AGAINST WALLS BEFORE FLOORS OR FRAMING SUPPORTING THE WALLS AT THE BOTTOM AND TOP ARE SECURELY IN PLACE EXCEPT AS SPECIFICALLY STATED IN WRITING BY THE STRUCTURAL ENGINEER.
11. PIPES, CONDUIT, DUCTS, ETC., SHALL NOT BE EMBEDDED INSIDE STRUCTURAL MEMBERS UNLESS SHOWN ON THE DRAWINGS OR PERMITTED IN WRITING BY THE STRUCTURAL ENGINEER.
12. DESIGN LIVE LOADS:

    ROOF LOAD:

    LIVE LOAD = 20 PSF (FLAT)
    16 PSF (SLOPE)

    FLOOR LOAD:

    CORRIDORS, STAIRS, & EXITS = 100 PSF

    MECH. EQUIPMENT ROOMS = 125 PSF

    STORAGE = 125 PSF

    ALL OTHER AREAS = 50 PSF

13. LATERAL LOADS:

    WIND LOAD:

    p = Ce Cq qs I
    Ce = 1.58 Cq = 1.30 qs = 20.8 I = 1.00
    P = 33 PSF

    SEISMIC LOAD:

    SOIL PROFILE TYPE :
    SEISMIC SOURCE TYPE :

    Na = 1.40 Nv = 1.60
    Ca = 0.40 Cv = 0.40
    Z = 0.40 I = 1.00
    R = 5.6 /4.5
    V = 0.260 W (FRAMES)
    0.320 W (SHEARWALLS)

SOILS AND FOUNDATION

1. ALL FOOTINGS AND SLABS SHALL BE FOUNDED ON FIRM UNDISTURBED NATURAL SOILS OR PROPERLY COMPACTED FILL.
2. LOCATE THE BOTTOM OF ALL EXTERIOR FOOTINGS A MINIMUM OF 18" BELOW LOWEST ADJACENT FINAL GRADE UNLESS OTHERWISE NOTED.
3. LOCATE THE BOTTOM OF ALL INTERIOR FOOTINGS A MINIMUM OF 18" BELOW TOP OF FINISH CONCRETE SLAB UNLESS OTHERWISE NOTED
4. ALL COMPACTED FILL SHALL HAVE A MINIMUM DENSITY OF 90% OF THE MAXIMUM OBTAINABLE IN ACCORDANCE WITH ASTM D1557 OR IN ACCORDANCE WITH THE SOILS REPORT.
5. THE FOUNDATION DESIGN IS BASED UPON UBC, CHAPTER 18
6. THE ALLOWABLE DESIGN VALUES ARE AS FOLLOWS:
   A. VERTICAL BEARING PRESSURE = 1000PSF
   B. LATERAL PASSIVE PRESSURE = 250 PCF
   C. COEFFICIENT OF FRICTION = 0.30
   D. LATERAL ACTIVE PRESSURE OF RETAINED EARTH = 38 PCF
7. A GEOTECHNICAL ENGINEER SHALL INSPECT AND APPROVE ALL EXCAVATIONS PRIOR TO PLACING REINFORCING AND/OR CONCRETE.

SUBGRADE PREPARATION

1. ALL FILL AND BACKFILL SHALL BE COMPACTED TO AT LEAST 90 PERCENT OF MAXIMUM DRY DENSITY AS DETERMINED BY ASTM D1557, METHOD A OR C.
2. PRIOR TO THE PLACEMENT OF PROPERLY COMPACTED STRUCTURAL FILL, THE EXPOSED GROUND SURFACE (EXCAVATION BOTTOM) SHALL BE SCARIFIED TO A MINIMUM DEPTH OF 12" PROPERLY MOISTURE CONDITIONED AND RECOMPACTED TO AT LEAST 90 PERCENT OF MAXIMUM DRY DENSITY AS DETERMINED IN ACCORDANCE WITH ASTM TEST PROCEDURE D1557. FILL SHALL THEN BE PLACED AND COMPACTED IN LAYERS OF 8" MAXIMUM THICKNESS UNTIL FINAL ELEVATIONS ARE ATTAINED.
3. SUBGRADE PREPARATION SHALL BE INSPECTED AND APPROVED BY A GEOTECHNICAL ENGINEER.

CONCRETE SLAB-ON-GRADE

1. CONCRETE SLAB-ON-GRADE SHALL HAVE A MINIMUM ACTUAL THICKNESS OF 4 INCHES. THE SLAB SHALL BE UNDERLAIN BY 2" OF SAND OVER A 6 MIL VISQUEEN MOISTURE BARRIER OVER 2" OF SAND.
2. MINIMUM SLAB REINFORCEMENT SHALL CONSIST OF #3 BARS AT 18" ON CENTER EACH WAY. CARE SHALL BE TAKEN DURING THE PLACEMENT AND CURING OF CONCRETE FLATWORK TO REDUCE THE POTENTIAL FOR SHRINKAGE CRACKING. THE BARS SHALL BE POSITIONED AT MID-DEPTH OF THE SLAB.

REINFORCING STEEL

1. ALL REINFORCING STEEL SHALL CONFORM TO ASTM A615, GRADE 60. REINFORCING TO BE WELDED SHALL BE ASTM A706, GRADE 60.
2. LOW HYDROGEN WELDING RODS SHALL BE USED FOR ALL WELDING OF REINFORCING BARS.
3. CONTINUOUS REINFORCING SHALL BE SPLICED WITH 30 BAR DIAMETERS MINIMUM (COMPRESSION) IN CONCRETE AND MASONRY AND 48 BAR DIAMETERS MINIMUM (TENSION) IN CONCRETE AND MASONRY UNLESS NOTED OTHERWISE.
4. REINFORCING BARS SHALL NOT BE REBENT WITHOUT PRIOR WRITTEN APPROVAL OF STRUCTURAL ENGINEER.
5. REINFORCING SHALL BE SPLICED ONLY AS SHOWN OR NOTED. SPLICES AT OTHER LOCATIONS SHALL BE APPROVED BY THE STRUCTURAL ENGINEER.
6. SPLICES IN ADJACENT HORIZONTAL WALL REINFORCING BARS SHALL BE STAGGERED 4'-0" MINIMUM UNLESS OTHERWISE NOTED. PROVIDE DOWELS IN FOOTINGS AND/OR GRADE BEAMS THE SAME SIZE AND NUMBER AS VERTICAL WALL OR COLUMN REINFORCING. DOWELS SHALL HAVE A MINIMUM PROJECTION EQUAL TO STANDARD LAP SPLICE UNLESS OTHERWISE NOTED.
7. ALL REINFORCING, ANCHOR BOLTS AND OTHER INSERTS SHALL BE SECURED IN PLACE PRIOR TO PLACING CONCRETE OR GROUTING MASONRY.
8. WELDED WIRE FABRIC SHALL CONFORM TO ASTM A185.
9. MINIMUM CONCRETE COVER SHALL BE AS SPECIFIED IN ACI 318 LATEST EDITION.

   A. CONCRETE CAST AGAINST AND PERMANENTLY EXPOSED TO EARTH 3"

   B. CONCRETE EXPOSED TO EARTH OR WEATHER:
      NO. 6 THROUGH NO. 18 BAR 2"
      NO. 5 BAR, W31 OR D31 WIRE AND SMALLER 1 1/2"

   C. CONCRETE NOT EXPOSED TO WEATHER OR IN CONTACT WITH GROUND:
      SLAB, WALL, JOISTS:
      NO. 14 AND NO. 18 BAR 1 1/2"
      NO. 11 BAR AND SMALLER 3/4"

10. BARS WITH A CARBON EQUIVALENT ABOVE 0.75 SHALL NOT BE WELDED. WELDING SHALL NOT BE DONE ON OR WITHIN TWO BAR DIAMETERS OF ANY PORTION OF A BAR THAT HAS BEEN BENT COLD.

CONCRETE

1. CEMENT SHALL CONFORM TO ASTM C150, TYPE V. WATER TO CEMENT RATIO SHALL NOT EXCEED 0.50 UNLESS NOTED OTHERWISE.
2. CONCRETE USES, TYPES, AND 28 DAY ULTIMATE COMPRESSIVE STRENGTHS ARE AS FOLLOWS:

USE	TYPE	28-DAY STRENGTH
FOUNDATIONS	HARDROCK	3,000 PSI
SLAB ON GRADE	HARDROCK	3,000 PSI
STRUCTURAL SLABS	HARDROCK	3,000 PSI
COLUMNS AND BEAMS	HARDROCK	3000PSI
FILL ON METAL DECK	LIGHTWEIGHT	3,000 PSI
OTHER	HARDROCK	3,000 PSI

3. HARDROCK AGGREGATE SHALL CONFORM TO ASTM C33.
4. APPROXIMATE AIR DRY DENSITY FOR HARDROCK CONCRETE SHALL BE 145 PCF.
5. LIGHTWEIGHT CONCRETE AGGREGATE SHALL CONFORM TO ASTM C330.
6. APPROXIMATE AIR DRY DENSITY FOR LIGHTWEIGHT CONCRETE SHALL NOT EXCEED 110 PCF.
7. ALL CONCRETE OF COMPRESSIVE STRENGTH GREATER THAN 2500 PSI SHALL HAVE CONTINUOUS INSPECTION BY A REGISTERED DEPUTY INSPECTOR APPROVED BY THE BUILDING DEPARTMENT.
8. STRIPPING OF FORMS AND SHORING SHALL BE IN STRICT ACCORDANCE WITH ACI 318, LATEST EDITION.
9. REFER TO MECHANICAL AND ELECTRICAL DRAWINGS FOR LOCATIONS OF ALL PIPES, CONDUITS, ETC.
10. CONCRETE EXPANSION ANCHORS SHALL BE HILTI KWIK-BOLT II EXPANSION ANCHORS (ICBO #4627).
11. CONCRETE SLEEVE ANCHORS SHALL BE HILTI DROP-IN ANCHORS (ICBO #2895).

STRUCTURAL STEEL

1. STRUCTURAL STEEL SHALL CONFORM TO STANDARD SPECIFICATIONS FOR STRUCTURAL STEEL FOR BRIDGES AND BUILDINGS ASTM A992, GRADE 50 UNLESS OTHERWISE NOTED.
2. FABRICATION AND ERECTION SHALL COMPLY WITH THE LATEST AISC SPECIFICATIONS.
3. ALL BOLTS FOR STEEL MEMBERS SHALL CONFORM TO ASTM A307 UNLESS OTEHRWISE NOTED.
4. PIPE COLUMNS SHALL CONFORM TO ASTM A53, GRADE B, TYPE E OR S.
5. ALL TUBE STEEL SHALL CONFORM TO ASTM A500, GRADE B.
6. WELDING SHALL BE BY THE ELECTRIC SHIELDED ARC PROCESS PERFORMED BY A CERTIFIED WELDER.
7. ALL FIELD WELDING AND HIGH STRENGTH BOLTING SHALL HAVE CONTINUOUS INSPECTION BY A REGISTERED DEPUTY INSPECTOR APPROVED BY THE BUILDING DEPARTMENT.
8. WELDING SHALL CONFORM TO AWS D1.1. USE E70XX ELECTRODES.
9. ALL GROOVE WELDS SHALL BE FULL PENETRATION UNLESS NOTED OTHERWISE.
10. AUTOMATIC END WELDED STUDS SHALL BE NELSON GRANULAR FLUX-FILLED SHEAR CONNECTORS OR ANCHORED STUDS. (ICBO #2614)

METAL STUDS

1. PROVIDE METAL STUDS AND/OR JOISTS AND ACCESSORIES AS MANUFACTURED BY CEMCO, AS INDICATED ON THE DRAWINGS, AS SPECIFIED HERIN AND AS NEEDED FOR A COMPLETE AND PROPER INSTALLATION.
2. COMPLY WITH PERTINENT RECOMMENDATIONS CONTAINED IN SPECIFICATIONS FOR METAL LATHING AND FURRING PUBLISHED BY THE METAL LATH/STEEL FRAMING ASSOCIATION.
3. STUDS SHALL BE FABRICATED FROM MILL CERTIFIED "PRIME STEEL" NO. 16 AND 14 GAUGE HOT ROLLED STEEL SHALL COMPLY WITH ASTM A570 OR ASTM A653 GRADE 50, NO. 16 AND 14 GAUGE GALVANIZED STUDS SHALL COMPLY WITH ASTM A653 GRADE 50 AND GALVANIZED SPECIFICATION ASTM A924, ALL SHALL HAVE A MINIMUM YIELD POINT OF 50 KSI.
4. NO. 18 GAUGE AND BELOW COLD-ROLLED SHALL COMPLY WITH ASTM A653 GRADE 33, ASTM 611 GRADE C, AND GRADE 33, 20 GAUGE A611 GRADE C. NO 18 AND 20 GAUGE GALVANIZED SHALL COMPLY WITH ASTM A653 GRADE 33 AND GALVANIZED SPECIFICATION ASTM A924, ALL SHALL HAVE A MINIMUM YIELD POINT OF 33 KSI.
5. LIGHT GAUGE STEEL FRAMING SECTIONS COMPLY WITH ASTM C645 (NON-LOAD BEARING WITH MINIMUM COATING) AND ASTM C955 (LOAD BEARING WITH G-60 MINIMUM COATING.
6. METAL STUDS SHALL BE CEMCO, TYPE CS WITH 1 5/8-INCH FLANGE & 9/16-INCH RETURN UNLESS NOTED OTHERWISE.

TYPE	Ix(IN4)	Sx(IN3)	A(IN2)
600CS16	2.914	0.971	0.344
600CS18	2.357	0.786	0.269
600CS20	1.827	0.586	0.192
362CS18	0.721	0.398	0.269
362CS20	0.561	0.296	0.196
600XCS14	4.216	1.405	0.535

7. METAL TRACKS SHALL BE CEMCO, TYPE DLT, OR EQUAL, MATCHING SIZE AND GUAGE OF STUDS, UNLESS NOTED OTHERWISE.

TYPE	Ix(IN4)	Sx(IN3)	A(IN2)
600DLT14	3.059	0.898	0.484
600DLT16	2.348	0.675	0.322
600DLT18	1.875	0.537	0.219
362DLT14	0.946	0.437	0.453
362DLT16	0.721	0.323	0.319
362DLT18	0.577	0.257	0.219

8. METAL STUDS AND TRACKS SHALL BE CONNECTED WITH #10 SHEET METAL SCREWS UNLESS NOTED OTHERWISE.
9. ALL WELDING SHALL BE PERFORMED BY CERTIFIED LIGHT GAUGE WELDERS APPROVED BY THE BUILDING DEPARTMENT.

CONCRETE BLOCK MASONRY

1. CONCRETE MASONRY UNITS SHALL CONFORM TO ASTM C90 GRADE N-1 NORMAL WEIGHT.
2. PORTLAND CEMENT SHALL BE TYPE I AND SHALL CONFORM TO ASTM C150.
3. SAND AGGREGATES SHALL BE CLEAN, SHARP AND WELL GRADED, FREE FROM DETRIMENTAL AMOUNTS OF DUST, LUMPS, SHALE AND ALKALI, OR ORGANIC MATERIAL, CONFORMING TO ASTM C144 (MORTAR) AND C404 (GROUT).
4. SOLID GROUT ALL CELLS. CLEANOUTS ARE REQUIRED AT THE BOTTOM OF ALL GROUTED CELLS.
5. MORTAR SHALL BE FRESHLY PREPARED AND UNIFORMLY MIXED IN PROPORTIONS OF ONE-PART PORTLAND CEMENT, OVER ONE-QUARTER (1/4) TO ONE-HALF (1/2) MAXIMUM PART HYDRATED LIME AND THREE-AND-ONE-HALF (3 1/2) PARTS SAND. MORTAR SHALL BE TYPE 'S' AND HAVE A MINIMUM COMPRESSIVE STRENGTH OF 2000 PSI AT 28 DAYS.
6. GROUT SHALL BE FRESHLY PREPARED AND UNIFORMLY MIXED, COMPOSED BY VOLUME OF ONE-PART PORTLAND CEMENT, TWO TO THREE PARTS SAND AND ONE TO TWO PARTS PEA GRAVEL TO WHICH SHALL BE ADDED NOT MORE THAN ONE-TENTH (1/10) PART HYDRATED LIME. SUFFICIENT WATER SHALL BE ADDED TO PRODUCE A CONSISTENCY FOR POURING WITHOUT SEGREGATION OF GROUT CONSTITUENTS. GROUT SHALL ATTAIN A MINIMUM COMPRESSIVE STRENGTH OF 2000 PSI AT 28 DAYS.
7. CONTINUOUS INSPECTION IS NOT REQUIRED UNLESS NOTED OTHERWISE.
8. THE MINIMUM ULTIMATE COMPRESSIVE STRENGTH OF THE MASONRY WALL ASSEMBLAGE AT 28 DAYS SHALL BE 1500 PSI. PRISM TESTS SHALL BE MADE IN ACCORDANCE WITH UBC, CHAPTER 21.

METAL DECK

1. METAL ROOF DECK AT PENTHOUSE ROOF SHALL BE TYPE B-36 AS MANUFACTURED BY ASCI. INC., OR EQUAL.
2. SEE ICBO REPORT #2757 FOR METAL DECK DATA.
3. ALL WELDING SHALL BE PERFORMED BY CERTIFIED LIGHT GAUGE WELDERS APPROVED BY THE BUILDING DEPARTMENT.
4. STUDS WELDED TO TOP FLANGES OF BEAMS AND GIRDERS SHALL BE AS MANUFACTURED BY TRW NELSON DIVISION OR EQUAL. (ICBO #2614)
5. ALL METAL DECK SHALL BE GALVANIZED.

NON-SHRINK GROUT

1. ACCEPTABLE MANUFACTURER'S FOR NON-SHRINK GROUT ARE DAYTON-SUPERIOR SURE-GRIP, MASTER BUILDERS EMBECO 928, OR MASTERFLOW 713, SONNEBORN SONOGROUT, OR APPROVED EQUAL.
2. DRYPACK TYPE GROUT SHALL MEET THE FOLLOWING CRITERIA:
   A. MIXTURE - 1 PART CEMENT TO 2-1/2 PARTS FINE AGGREGATE (#4 SIEVE) WITH WATER.
   B. CONSISTENCY - WHEN A BALL OF MIXTURE IS COMPRESSED IN THE HAND IT WILL MAINTAIN ITS SHAPE SHOWING FINGER MARKS BUT NOT SHOWING ANY SURFACE WATER.
3. REMOVE LAITTANCE AND ROUGHEN SURFACE OF CONCRETE TO BE IN CONTACT WITH GROUT TO CONFORM TO REQUIREMENTS FOR CONSTRUCTION JOINTS.
4. MIX, PLACE, AND CURE NON-SHRINK GROUT IN ACCORDANCE WITH MANUFACTURER'S RECOMMENDATIONS TO PROVIDE FULL BEARING UNDER PLATES.
5. TEST GROUT FOR COMPRESSIVE STRENGTH IN ACCORDANCE WITH UBC, SECTION 1905.6 AND AS FOLLOWS:
   A. MAKE AND CURE FOUR CYLINDERS ACCORDING TO ASTM C31 FOR EACH 50 CUBIC YARDS, OR FRACTION THEREOF.
   B. TEST ONE CYLINDER AT SEVEN DAYS AND TWO CYLINDERS AT 28 DAYS FOR STENGTH IN ACCORDANCE WITH ASTM C39, AND RETAIN ONE "HOLD" SPECIMEN.

STRUCTURAL TESTS & INSPECTIONS REQ'D. FOR THIS PROJECT

1. REFER TO CHAPTER 17 OF THE 1998 CALIFORNIA BUILDING CODE FOR AMPLIFICATION OF THE FOLLOWING REQUIREMENTS: ALL SPECIAL INSPECTORS MUST SUBMIT FINAL REPORTS TO THE CITY INSPECTOR, AND THE STRUCTURAL ENGINEER.

	NO ☐	YES ■
2. FOUNDATIONS:		
A. COMPACTED FILL INCLUDING UTILITY TRENCHES		■
B. VISUAL EXAMINATION & APPROVAL OF ALL FOUNDATION EXCAVATIONS		■
C. EXPANSION INDEX EVALUATION OF PAD	☐	
D. DRILLING OF CAISSONS	☐	
3. CONCRETE:		
A. CONTINUOUS INSPECTION & TEST CYLINDERS FOR CONCRETE OVER 2500 PSI		■
B. PNEUMATICALLY PLACED CONCRETE-GUNITE AND SHOTCRETE (TEST SPCIMANS, PLACING OF CONC.)	☐	
C. BOLTS & EMBEDED PLATES INSTALLED IN CONCRETE (DURING INSTALLATION & PLACING OF CONC.)		■
4. REINFORCING STEEL:		
A. PLACING OF REINFORCING		■
B. PLACING & STRESSING OF TENDONS	☐	
C. SAMPLING & TESTING OF STEEL (MILL REPORTS & IDENTIFICATION OF STEEL)		■
5. WELDING:		
A. ALL STRUCTURAL FIELD WELDING (INCLUDES DECKING & WELDED STUDS)		■
B. NON-DESTRUCTIVE TESTING OF MOMENT RESISTING SPACE FRAMES	☐	
C. STRUCTURAL LIGHT GAGE METAL FRAMING	☐	
6. BOLTING:		
A. HIGH STRENGTH BOLTING	☐	
B. EXPANSION BOLTS IN CONCRETE OR MASONRY		■
C. INSTALLATION OF EPOXY OR GROUTED ANCHORED BOLTS, RODS, OR REBAR		■
7. MASONRY:		
A. SAMPLING & TESTING OF MASONRY		■
B. TESTING OF GROUT & MORTAR PRISMS		■
C. CONTINUOUS INSPECTION		■
D. COMPRESSION PRISMS	☐	
8. INSULATING CONCRETE FILL:		
TEST & INSPECTIONS	☐	
9. STRUCTURAL STEEL:		
A. MILL REPORTS & IDENTIFICATION OF STEEL (AFFIDAVIT OF COMPLIANCE)		■
B. SAMPLING & TESTING	☐	
10. APPROVED FABRICATORS: (MUST SUBMIT CERTIFICATION OF COMPLIANCE)		■
FOR ALL OFFSITE FABRICATION SUCH AS STRUCTURAL STEEL, GLU-LAMS, PRECAST CONCRETE, ETC.	☐	
11. PLYWOOD ROOF & WALL SHEATHING:		
INSPECTION OF PLYWOOD PLACEMENT. NAIL SIZE, SPACING, PENETRATION & EDGE DISTANCES	☐	

12. ALL TESTS & INSPECTIONS SHALL BE PERFORMED BY AN INDEPENDENT INSPECTION AGENCY EMPLOYED BY THE OWNER PRIOR TO THE COMMENCMENT OF WORK. JOB SITE VISITS BY THE STRUCTURAL ENGINEER DO NOT CONSTITUTE AN OFFICAL INSPECTION. COPIES OF TEST RESULTS SHALL BE FURNISHED TO THE CITY INSPECTOR AND THE STRUCTURAL ENGINEER IN ADDITION TO OTHER NORMAL DISTRIBUTIONS.

NOTE: IT IS THE CONTRACTORS SOLE RESPONSIBILITY TO SEE THAT THESE TESTS AND INSPECTIONS ARE PERFORMED.

S1.1 GENERAL NOTES AND SHEET INDEX
S1.2 TYPICAL DETAILS
S1.3 TYPICAL AND MISCELLANEOUS DETAILS
S2.1 PARTIAL FOUNDATION AND ROOF FRAMING PLAN

SHEET INDEX | 4

DETAIL NUMBER-TYP.
SHEET NUMBER-TYP.

DETAIL REFERENCE

SECTION REFERENCE

WALL ELEVATION

TOP OF ELEVATION +0'-0"

DATUM POINT

STEP FOOTING

GRID LINES

REVISION DELTA

SYMBOLS | 2

20	16	12	8	4
19	15	11	7	3
18	14	10	6	2
17	13	9	5	1

NOTES:
DETAIL SPACE NUMBER ALWAYS REMAINS THE SAME. IF A DETAIL OCCUPIES MORE THAN ONE SPACE IT IS IDENTIFIED BY THE NUMBER FOR THE LOWER RIGHT SPACE. A DETAIL OCCUPYING SPACES 3, 4, 7, 8 WOULD BE NUMBERED 3.

DRAWING FORMAT | 1

CARRIER JOHNSON
ARCHITECTURE
INTERIOR DESIGN
PLANNING

GORDON R. CARRIER AIA
MICHAEL C. JOHNSON AIA

WILLIAM C. BOCKEN AIA
DEBORAH P. ELLIOTT IIDA

2600 MICHELSON DRIVE
SUITE 400
IRVINE, CALIFORNIA
92612

TEL 949 955-2353
FAX 949 955-2377

1301 THIRD AVENUE
SAN DIEGO, CALIFORNIA
92101

TEL 619 239-2353
FAX 619 239-6227

REGISTERED PROFESSIONAL ENGINEER JEFFREY A. ROESSLER No. C 32466 Exp. 12-31-04 CIVIL STATE OF CALIFORNIA

rdg
ROESSLER DESIGN GROUP
4680 Barranca Parkway, Suite 209
Irvine, California 92604
(949) 486-8111

ONTARIO PD :: TEMPORARY HOLDING AREA

2534 S. ARCHIBALD AVE., ONTARIO, CALIFORNIA 91761

ISSUES:

DIRECTORY/FILE NUMBER:
XREF'S DRAWINGS:
PROJECT NUMBER: 401.00
DRAWN BY: CHECKED BY:
DATE:
SCALE: AS NOTED
TITLE: GENERAL NOTES AND SHEET INDEX

DRAWING NO: S1.1H

ALL IDEAS, DESIGN, ARRANGEMENTS AND PLANS INDICATED OR REPRESENTED BY THIS DRAWING ARE OWNED BY, AND THE PROPERTY OF CARRIER JOHNSON AND WERE CREATED, EVOLVED AND DEVELOPED FOR USE ON, AND IN CONNECTION WITH THIS PROJECT. NONE OF SUCH IDEAS, DESIGNS, ARRANGEMENTS OR PLANS SHALL BE USED BY OR DISCLOSED TO ANY PERSON, FIRM OR CORPORATION FOR ANY PURPOSE WHATSOEVER WITHOUT THE WRITTEN PERMISSION OF CARRIER JOHNSON. FILING THESE DRAWINGS OR SPECIFICATIONS WITH ANY PUBLIC AGENCY IS NOT A PUBLICATION OF SAME. NO COPY, REPRODUCTION OR USE THEREOF IS PERMISSIBLE WITHOUT THE CONSENT OF CARRIER JOHNSON.

R THICKNESS	WELD THICKNESS "t"
1/4"	3/16"
1/2"	3/16"
3/4"	1/4"
OVER 3/4"	5/16"

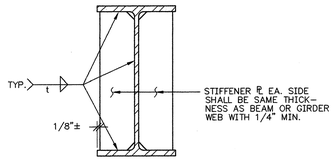

STIFFENER PLATE | NONE | 12

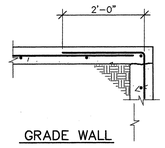

GRADE WALL

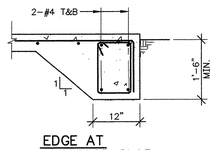

EDGE AT EXTERIOR SLAB

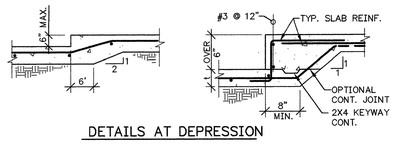

DETAILS AT DEPRESSION

TYP. SLAB ON GRADE DETS | NONE | 11

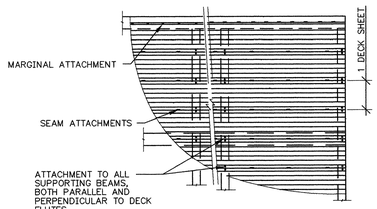

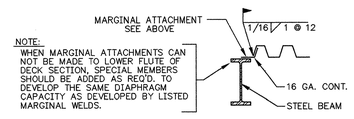

NOTE:
WHEN MARGINAL ATTACHMENTS CAN NOT BE MADE TO LOWER FLUTE OF DECK SECTION, SPECIAL MEMBERS SHOULD BE ADDED AS REQ'D. TO DEVELOP THE SAME DIAPHRAGM CAPACITY AS DEVELOPED BY LISTED MARGINAL WELDS.

DECK WELDING SCHEDULE

LOCATION	DECK TYPE	DECK SIZE & GAGE	ATTACHMENT @ SUPPORTS	MARGINAL ATTACHMENT	SEAM ATTACHMENTS
ROOF	B-36	3"x 16 GA.	7 PDF PER SHEET	P.D.F. @ 6"	B.P. @ 6"

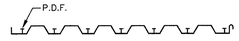

NOTES:
B.P. = BUTTON PUNCH
P.D.F. = HILTI POWDER DRIVEN FASTENERS ENP2-21PL15 (ICBO #4373)

TYP. DECK ATTACHMENT DTL. AND SCHED. | NONE | 9

NOTE: WELDS ARE REQUIRED TO DEVELOP 125% OF BAR STRENGTH.

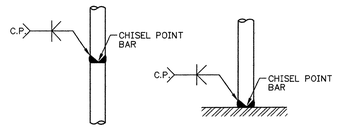

BAR TO BAR BAR TO SHAPE OR PLATE

TYP. VERT. REINF. WELDED SPLICE

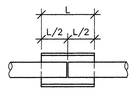

PLAN



SECTION

BAR SIZE	ANGLE SIZE & "L"	WELD SIZE "t"	
#6	∠ 1 3/4x1 3/4x3/16x0'-8"	5/16"	
#7	∠ 1 3/4x1 3/4x3/16x0'-8"	1/4"	
#8	∠ 2x2x1/4x1'-0"	1/4"	
#9	∠ 2x2x5/16x1'-0"	3/16"	
#10	∠ 2 1/2x2 1/2x5/16x1'-2"	3/16"	
#11	∠ 2 1/2x2 1/2x3/8x1'-2"	3/16"	

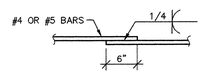

TYP. HORIZ. REINF. WELDED SPLICE

TYPICAL REINFORCEMENT SPLICE DETAIL | NONE | 7

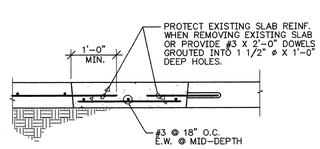

TYP. SLAB ON GRADE REPAIR | NONE | 6

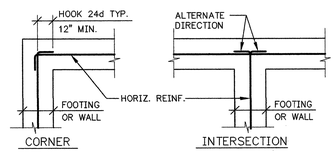

PLAN SECTION AT SINGLE CURTAIN REINFORCEMENT

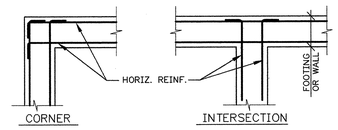

PLAN SECTION AT DOUBLE CURTAIN REINFORCEMENT

TYP. WALL AND FTG. REINF. AT CORNERS AND INTERSECTIONS | NONE | 5

MIN. LAP SPLICE TABLE (LENGTH IN INCHES)									
CONCRETE STRENGTH PSI	REBAR SIZE / LAP SPLICE TYPE	#3	#4	#5	#6	#7	#8	#9	#10	#11
3000	TENSION (TOP)	21	29	36	46	63	82	104	132	163
	TENSION (OTHER)	18	20	26	33	45	59	74	95	116
	COMPRESSION	18	18	19	23	27	30	34	38	42
4000	TENSION (TOP)	21	29	36	43	54	71	90	115	141
	TENSION (OTHER)	18	20	26	31	39	51	65	82	101
	COMPRESSION	18	18	19	23	27	30	34	38	42
MASONRY	TENSION	23	31	39	47	54	62	70	79	87
	COMPRESSION	18	24	29	35	41	47	53	60	66

NOTE:
ALL DETAILING & PLACING OF REINF. SHALL COMPLY WITH LAP SPLICE SCHED. & DETAILS, IN CASE OF CONFLICT, SPECIFIC DETAILS ON DWGS. SHALL GOVERN.

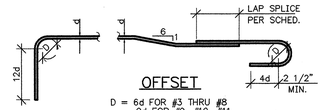



STIRRUPS & TIES(D = 4d)

TYP. REBAR HOOKS AND SPLICES | NONE | 3

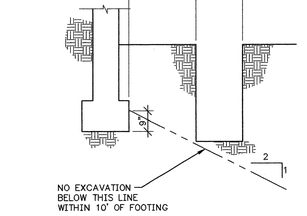

TYP. EXCAVATION ADJACENT TO FTG. | NONE | 2

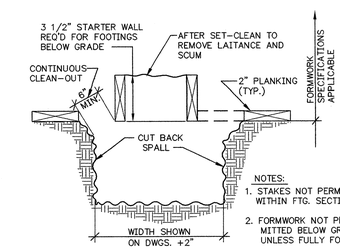

NOTE:
FOUNDATION CONCRETE MAY BE PLACED DIRECTLY INTO NEAT EXCAVATIONS PROVIDED THE FOUNDATION TRENCH WALLS ARE STABLE AS DETERMINED BY THE SOILS ENGINEER.
IN SUCH CASE THE MINIMUM FORMWORK SHOWN ABOVE IS MANDATORY TO INSURE CLEAN EXCAVATIONS IMMEDIATELY PRIOR TO AND DURING CONCRETE PLACEMENT.

MANDATORY MIN. FORMWORK | NONE | 1

CARRIER JOHNSON
ARCHITECTURE
INTERIOR DESIGN
PLANNING

GORDON R. CARRIER AIA
MICHAEL C. JOHNSON AIA

WILLIAM C. BOCKEN AIA
DEBORAH P. ELLIOTT IIDA

2600 MICHELSON DRIVE
SUITE 400
IRVINE, CALIFORNIA
92612

TEL 949 955-2353
FAX 949 955-2377

1301 THIRD AVENUE
SAN DIEGO, CALIFORNIA
92101

TEL 619 239-2353
FAX 619 239-6227

REGISTERED PROFESSIONAL ENGINEER JEFFREY A. ROEBBLER No. C 32485 Exp. 12-31-04 CIVIL STATE OF CALIFORNIA

rdg
ROEBBLER DESIGN GROUP
4680 Barranca Parkway, Suite 205
Irvine, California 92604
(949) 551-9111

ONTARIO PD:: TEMPORARY HOLDING AREA

2534 S. ARCHIBALD AVE., ONTARIO, CALIFORNIA 91761

ISSUES:

DIRECTORY/FILE NUMBER:

XREF'S DRAWINGS:

PROJECT NUMBER:
481L00

DRAWN BY: CHECKED BY:

DATE:

SCALE:
AS NOTED

TITLE:
TYPICAL DETAILS

DRAWING NO:
S1.2H

ALL IDEAS, DESIGN, ARRANGEMENTS AND PLANS INDICATED OR REPRESENTED BY THIS DRAWING ARE OWNED BY, AND THE PROPERTY OF CARRIER JOHNSON AND WERE CREATED, EVOLVED AND DEVELOPED FOR USE ON, AND IN CONNECTION WITH THIS PROJECT AND SHOULD NOT BE USED BY ANY PERSONS OR ENTITIES FOR ANY OTHER PROJECTS WITHOUT THE EXPRESS WRITTEN CONSENT OF CARRIER JOHNSON. ANY REPRODUCTION OR USE THEREOF IS PERMISSIBLE WITHOUT THE CONSENT OF CARRIER JOHNSON. FILING THESE DRAWINGS OR SPECIFICATIONS WITH ANY PUBLIC AGENCY IS NOT A PUBLICATION OF SAME. NO COPYRIGHT

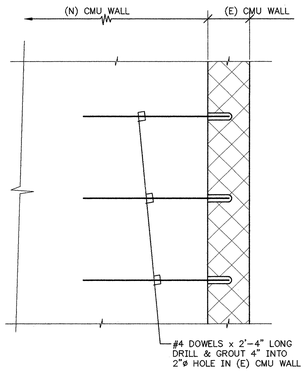

DETAIL | 1" | 12

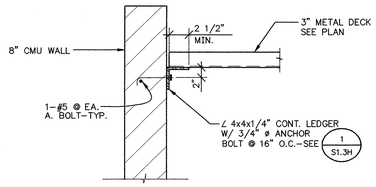

DETAIL | 1" | 8

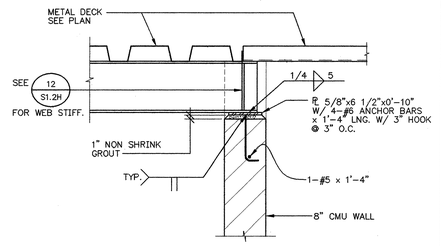

DETAIL | NONE | 4

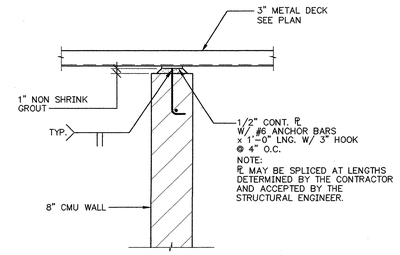

DETAIL-DECK TO CMU ⊥ PERP. CONDITION | 1" | 11

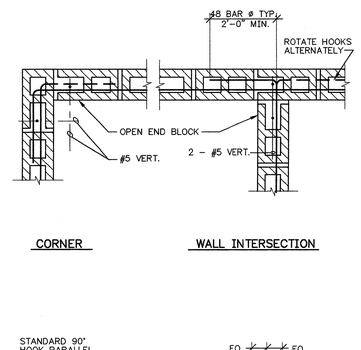

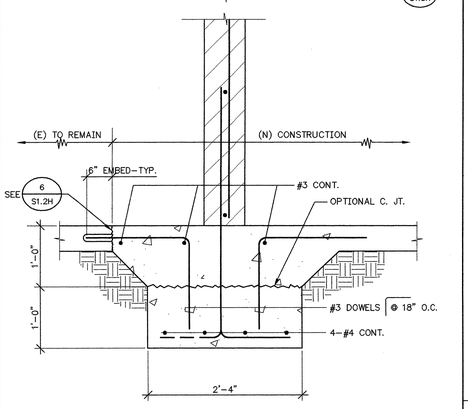

TYP. 8" CMU WALL SECTION | 1" | 2

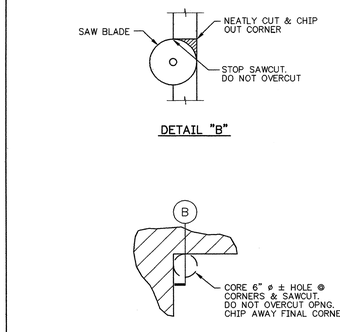

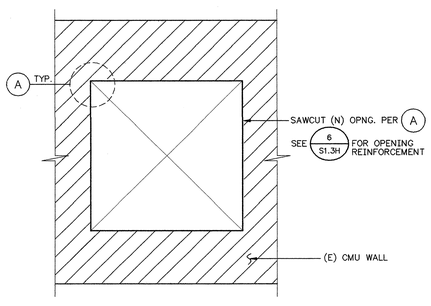

TYP. (N) OPNG. SAW CUT DETAIL IN (E) MASONRY WALL | NONE | 13

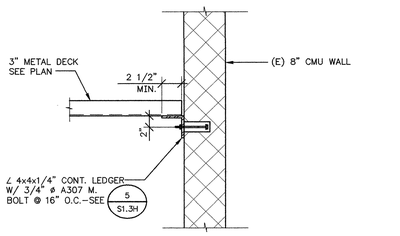

DETAILS | 1" | 9

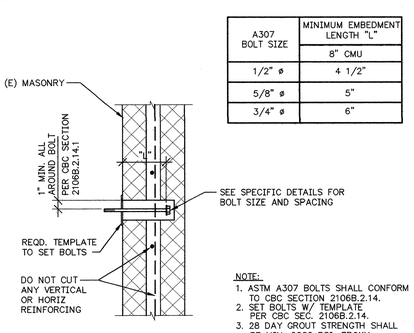

TYP. CMU WALL DETAILS | 3/4" | 6

A307 BOLT SIZE	MINIMUM EMBEDMENT LENGTH "L"
	8" CMU
1/2" ø	4 1/2"
5/8" ø	5"
3/4" ø	6"

TYP. MACHINE BOLT IN EXISTING MASONRY WALL | NONE | 5

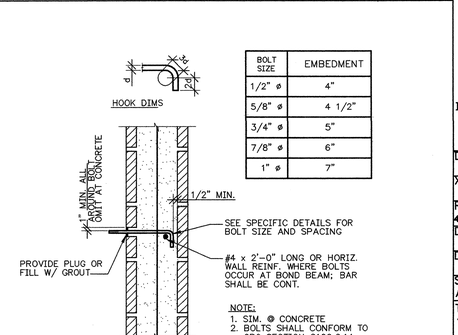

BOLT SIZE	EMBEDMENT
1/2" ø	4"
5/8" ø	4 1/2"
3/4" ø	5"
7/8" ø	6"
1" ø	7"

TYP. ANCHOR BOLT IN NEW MASONRY WALL | NONE | 1

CARRIER JOHNSON
ARCHITECTURE
INTERIOR DESIGN
PLANNING

GORDON R. CARRIER AIA
MICHAEL C. JOHNSON AIA

WILLIAM C. BOCKEN AIA
DEBORAH P. ELLIOTT IIDA

2600 MICHELSON DRIVE
SUITE 400
IRVINE, CALIFORNIA
92612

TEL 949 955-2353
FAX 949 955-2377

1301 THIRD AVENUE
SAN DIEGO, CALIFORNIA
92101

TEL 619 239-2353
FAX 619 239-6227

REGISTERED PROFESSIONAL ENGINEER JEFFREY A. ROESSLER No. C 32466 Exp. 12-31-04 CIVIL STATE OF CALIFORNIA

rdg
ROESSLER DESIGN GROUP
4850 Barranca Parkway Suite 209
Irvine, California 92604
(949) 651-811

ONTARIO PD:: TEMPORARY HOLDING AREA

2534 S. ARCHIBALD AVE., ONTARIO, CALIFORNIA 91761

ISSUES:

DIRECTORY/FILE NUMBER:

XREF'S DRAWINGS:

PROJECT NUMBER: 4511.00

DRAWN BY: CHECKED BY:

DATE:

SCALE: AS NOTED

TITLE: TYPICAL AND MISCELLANEOUS DETAILS

DRAWING NO: S1.2H

ALL IDEAS, DESIGN, ARRANGEMENTS AND PLANS INDICATED OR REPRESENTED BY THIS DRAWING ARE OWNED BY, AND THE PROPERTY OF CARRIER JOHNSON, AND WERE CREATED, EVOLVED AND DEVELOPED FOR USE ON, AND IN CONNECTION WITH THIS PROJECT AND NOT FOR ANY OTHER PROJECT. NEITHER THIS DRAWING NOR THE IDEAS, DESIGN, ARRANGEMENTS AND PLANS INDICATED OR REPRESENTED THEREBY SHALL BE USED BY, OR DISCLOSED TO ANY PERSON, FIRM, OR CORPORATION FOR ANY PURPOSE WHATSOEVER WITHOUT THE WRITTEN PERMISSION OF CARRIER JOHNSON. FILING THESE DRAWINGS OR SPECIFICATIONS WITH ANY PUBLIC AGENCY IS NOT A PUBLICATION OF SAME. NO COPYRIGHT OR REPRODUCTION OR USE THEREOF IS PERMISSIBLE WITHOUT THE CONSENT OF CARRIER JOHNSON.

ROOF FRAMING PLAN NOTES

1. SEE SHEETS S1.1 THRU S1.5 FOR GENERAL NOTES AND TYPICAL DETAILS
2. FINISH GROUND FLOOR IS AT ELEVATION +100'-0" TOP OF STEEL ELEVATION AT ROOF VARIES, SEE PLAN FOR TOP OF STEEL AS REFERENCED TO GROUND FLOOR NOTED THUS: +0'-0" OR -0'-0"
3. SEE ARCHITECTURAL DRAWINGS FOR DIMENSIONS AND ELEVATIONS NOT SHOWN OR NOTED.
4. TYPICAL ROOF DIAPHRAGM IS 3" 16 GA. METAL DECK. INDICATES DIRECTION OF DECKING. SEE 18 / S1.3H
5. TOPS OF ALL NEW CMU WALLS ARE TO BE BRACED BY THE NEW METAL DECK–SEE 10 / S1.3H AND 11 / S1.3H

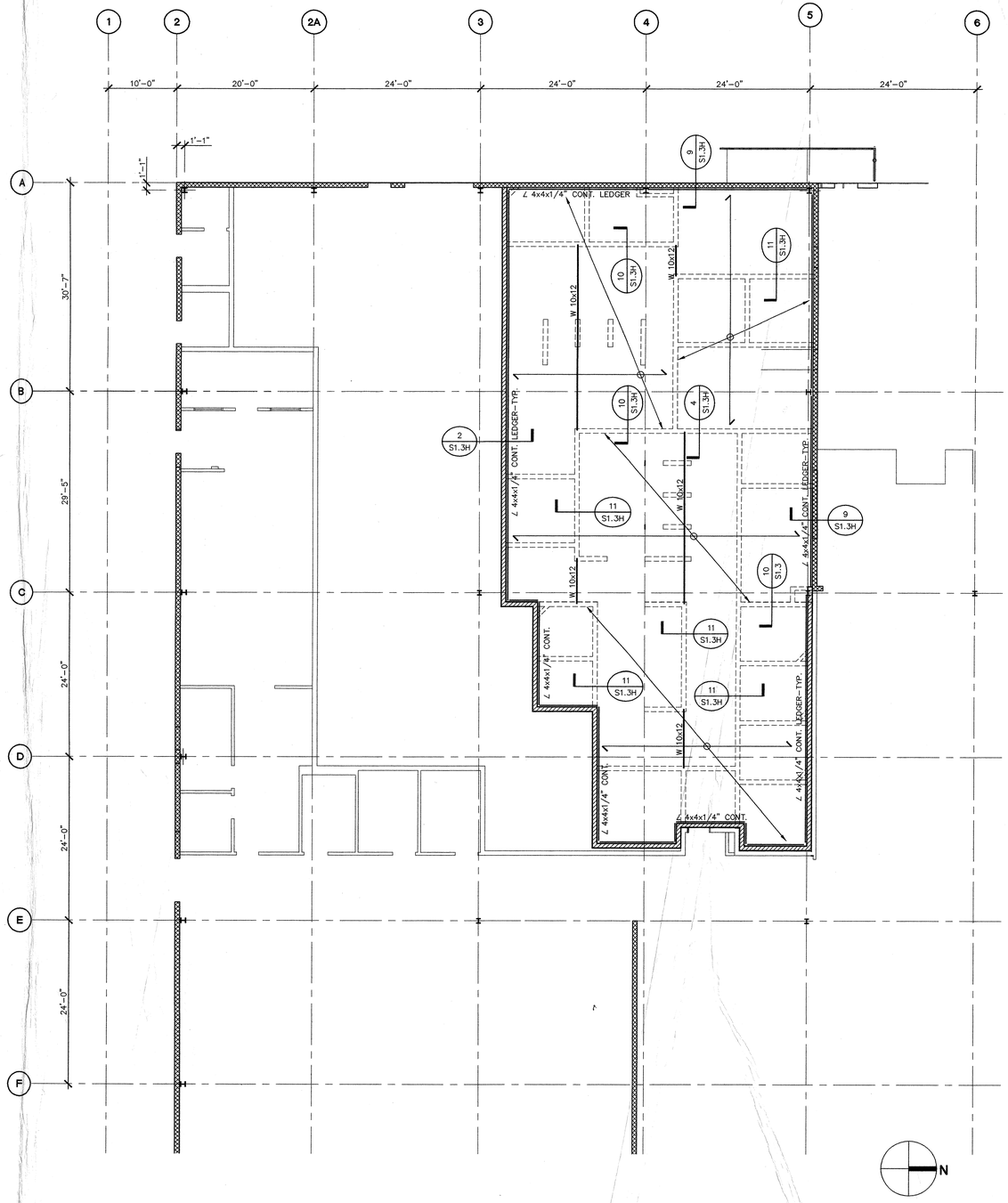

PARTIAL ROOF FRAMING PLAN | 1/8" | 2

FOUNDATION PLAN NOTE:

1. SEE SHEETS S1.1 THRU S1.5 FOR GENERAL NOTES AND TYPICAL DETAILS
2. SEE ARCHITECTURAL DRAWINGS FOR DIMENSIONS & NOTES NOT SHOWN ON PLAN.
3. CONTRACTOR SHALL VERIFY ALL EXISTING DIMENSIONS & CONDITIONS PRIOR TO START OF WORK.
4. (N) DENOTES NEW CONSTRUCTION, ALL OTHER IS (E) EXISTING TO REMAIN.
5. TOP OF CONCRETE SLAB AT GROUND FLOOR IS DATUM AT +100'-0" ALL ELEVATIONS REFERENCED TO DATUM ARE NOTED THUS: +0'-0" OR -0'-0"
6. LOCATIONS OF INTERIOR PARTITIONS, DEPRESSED SLABS AND SLOPED AREAS ARE FOR REFERENCE ONLY. SEE ARCHITECTURAL DRAWINGS FOR DIMENSIONED LOCATIONS.

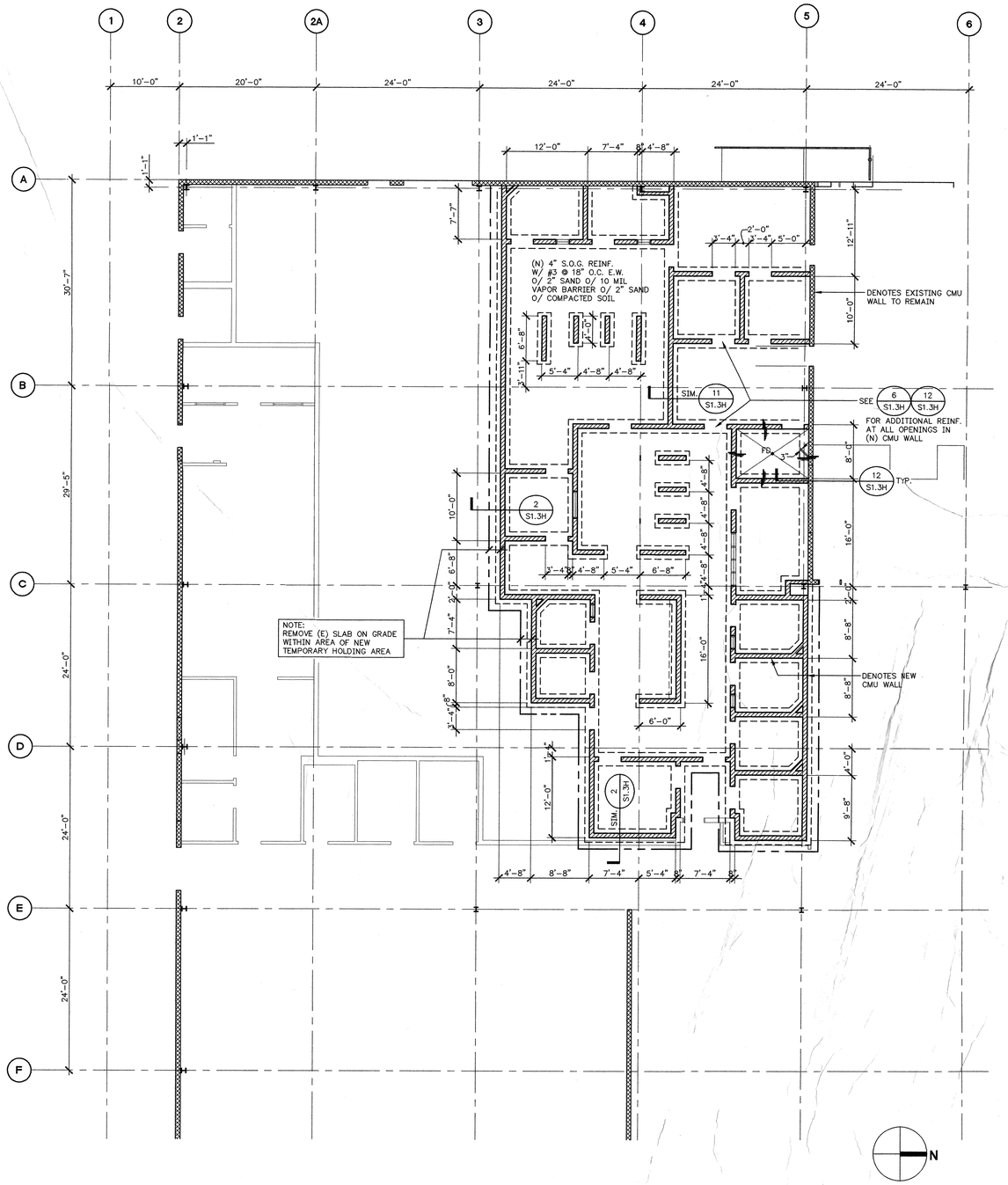

PARTIAL FOUNDATION PLAN

CARRIER JOHNSON
ARCHITECTU
INTERIOR DESI
PLANNI
GORDON R. CARRI
MICHAEL C. JOHNS
WILLIAM C. BOCK
DEBORAH P. ELLIO
2600 MICHELSON
SU
IRVINE, CALI
TEL 949 95
FAX 949 95
1301 THIRD
SAN DIEGO, CALI
TEL 619 23
FAX 619 23

REGISTERED PROFESSIONAL ENGINEER JEFFREY A. ROESSLER No. C 32485 Exp. 12-31-04 CIVIL STATE OF CALIFORNIA

rdg
ROESSLER DESIGN GROUP
4590 Barranca Parkway, Suite 209
Irvine, California 92604
(949) 551-0111

ONTARIO PD:: TEMPORARY HOLDING AREA

2534 S. ARCHIBALD AVE., ONTARIO, CALIFORNIA 91761

ISSUES:

DIRECTORY/FILE NUMBER:
XREF'S DRAWINGS:
PROJECT NUMBER: 451L00
DRAWN BY: CHECKED BY
DATE:
SCALE: AS NOTED
TITLE: PARTIAL FOUNDATION AND FRAMING PLAN