LA MIRADA HIGH SCHOOL MODERNIZATION

NORWALK- LA MIRADA UNIFIED SCHOOL DISTRICT
13520 ADELFA AVENUE
LA MIRADA, CALIFORNIA 90638

CONSTRUCTION DOCUMENTS

DIRECTORY

OWNER

NORWALK – LA MIRADA UNIFIED SCHOOL DISTRICT
12820 PIONEER BOULEVARD
NORWALK, CA. 90650–2984
TEL: (562) 868–0431
FAX: (562) 864–7541

CONSTRUCTION MANAGEMENT

McCARTHY
12820 PIONEER BOULEVARD
NORWALK, CA. 90650–2984
TEL: (562) 863–2833 EXT. 302
FAX: (562) 863–2813
CONTACT: JOHN WHITMORE

ARCHITECT

DOUGHERTY + DOUGHERTY
3194–D AIRPORT LOOP DRIVE
COSTA MESA, CA 92626
TEL: (714) 427–0277
FAX: (714) 427–0288
CONTACT: BRIAN DOUGHERTY, FAIA
DAVID BANNON, AIA

STRUCTURAL ENGINEER

KPFF CONSULTING ENGINEERS
IRVINE CENTER TOWERS
18400 VON KARMAN SUITE 100
IRVINE, CA 92612
TEL: (949) 252–1022
FAX: (949) 252–8082
CONTACT: WILLIAM H. THORPE, S.E.

MECHANICAL ENGINEER

F.T. ANDREWS, INC.
831 S. HARBOR BLVD.
ANAHEIM, CA 92805
TEL: (714) 772–9193
FAX: (714) 772–5798
CONTACT: RAY CRANSTON JR., P.E.

PLUMBING ENGINEER

F.T. ANDREWS, INC.
831 S. HARBOR BLVD.
ANAHEIM, CA 92805
TEL: (714) 772–9193
FAX: (714) 772–5798
CONTACT: RAY CRANSTON JR., P.E.

ELECTRICAL ENGINEER

GLP KARJALA ASSOCIATES, INC.
3185–C AIRWAY AVENUE
COSTA MESA, CA 92626
TEL: (714) 751–1851
FAX: (714) 751–4216
CONTACT: BILL VOLLER

SHEET INDEX (140 SHEETS)

GENERAL

G001 COVER SHEET
G002 ABBREVIATIONS, SYMBOLS & NOTES

TOPOGRAPHIC MAP

FOR REFERENCE ONLY

ARCHITECTURAL

AD001 TRENCHING PLAN
A001 OVERALL SITE PLAN
A002 ENLARGED SITE PLAN
A002.1 ENLARGED SITE PLANS & DETAILS
A003 ROOF PLAN, CANOPY & COVER WALK
A004 CODE ANALYSIS
A005 SITE DETAILS
A006 SITE DETAILS
A011 FINISH SCHEDULES
A012 FINISH SCHEDULES
A013 DOOR SCHEDULES BUILDINGS A–B, C–D
A014 DOOR SCHEDULES BUILDINGS E–F, G–H, I–J & L
A015 DOOR SCHEDULES BUILDINGS M, N & R
1 A015.2 DOOR SCHEDULES BUILDINGS K, O, P , Q & T
A016 WINDOW SCHEDULE AND FRAME TYPES
A017 WINDOW & DOOR DETAILS
AD101 CLASSROOM BLDGS. A–B & C–D DEMOLITION PLANS
AD102 CLASSROOM BLDGS. E–F & G–H DEMOLITION PLANS
AD103 CLASSROOM BLDGS. I–J & N DEMOLITION PLANS
AD104 CLASSROOM BLDGS. L & M DEMOLITION PLANS
AD105 CLASSROOM BLDGS. R & T DEMOLITION PLANS
1 AD106 BUILDINGS K & O DEMOLITION PLANS
AD107 BUILDINGS P & Q DEMOLITION PLANS
A101 CLASSROOM BLDGS. A–B & C–D FLOOR PLANS
A102 CLASSROOM BLDGS. E–F & G–H FLOOR PLANS
A103 CLASSROOM BLDGS. I–J & N FLOOR PLANS
A104 CLASSROOM BLDGS. L & M FLOOR PLANS
A105 CLASSROOM BLDGS. R & T FLOOR PLANS
1 A106 BUILDINGS K & O FLOOR PLANS
A107 BUILDINGS P & Q FLOOR PLANS
A201 EXTERIOR ELEVATIONS BLDGS. A–B & L
A202 EXTERIOR ELEVATIONS BLDGS. C–D & M
A203 EXTERIOR ELEVATIONS BLDGS. E–F & N
A204 EXTERIOR ELEVATIONS BLDGS. G–H & I–J
A205 EXTERIOR ELEVATIONS BLDGS. R & T
A206 EXTERIOR ELEVATIONS BLDGS. K & Q
A207 EXTERIOR ELEVATIONS BLDGS. O & P
A211 WALL & BUILDING SECTIONS, BUILDING N & C–D
A212 WALL & BUILDING SECTIONS, BUILDING N
A301 ENLARGED PLANS & INTERIOR ELEVATIONS
A302 ENLARGED PLANS & INTERIOR ELEVATIONS
A303 ENLARGED PLANS & INTERIOR ELEVATIONS
A304 ENLARGED PLANS & INTERIOR ELEVATIONS
1 A305 ENLARGED PLANS & INTERIOR ELEVATIONS
A306 ACCESSIBILITY ENLARGED PLANS & DETAILS
A401 CLASSROOM BLDGS. A–B & C–D REF. CEILING PLANS
A402 CLASSROOM BLDGS. E–F & G–H REF. CEILING PLANS
A403 CLASSROOM BLDGS. I–J & N REF. CEILING PLANS
A404 CLASSROOM BLDGS. L & M REF. CEILING PLANS
A405 CLASSROOM BLDGS. R & T REF. CEILING PLANS
1 A406 BUILDING K & O REF. CEILING PLANS
A407 BUILDING P & Q REF. CEILING PLANS
A411 CEILING DETAILS
A501 DETAILS
A502 DETAILS
A503 ENLARGED ROOF PLANS & DETAILS
A601 INTERIOR ELEVATIONS
A602 INTERIOR ELEVATIONS
A603 INTERIOR ELEVATIONS
A604 ENLARGED PLANS AND INTERIOR ELEVATIONS
A605 INTERIOR ELEVATIONS
A606 INTERIOR ELEVATIONS
A607 INTERIOR ELEVATIONS
A608 INTERIOR ELEVATIONS
1 A609 INTERIOR ELEVATIONS
A610 INTERIOR ELEVATIONS
A611 CASEWORK DETAILS

STRUCTURAL

S001 GENERAL NOTES
S002 NOTES, SYMBOLS & ABBREVIATIONS
S100 SITE PLAN
S101 CLASSROOM BUILDINGS C–D FDN & ROOF PLANS
S102 CLASSROOMS BUILDINGS A–B, E–F & G–H ROOF FRAMING PLANS
S103 CLASSROOM BUILDING N FOUNDATION PLAN
S104 CLASSROOM BUILDING N ROOF FRAMING PLAN
S105 CLASSROOM BUILDING I–J & O ROOF FRAMING PLANS
S106 CLASSROOMS BUILDINGS L & M ROOF FRAMING PLANS
S107 CLASSROOM BUILDING R FOUNDATION & ROOF FRAMING PLANS
S108 CLASSROOM BUILDING T ROOF FRAMING PLAN
S109 CLASSROOM BUILDING L & M ROOF FRAMING PLANS
S511 TYPICAL CONCRETE DETAILS
S512 TYPICAL CONCRETE DETAILS
S521 TYPICAL STEEL DETAILS
S531 TYPICAL WOOD DETAILS
S532 WOOD DETAILS
S533 WOOD DETAILS
S534 WOOD DETAILS

MECHANICAL

M000 MECHANICAL SCHEDULES, LEGEND & NOTES
M001 MECHANICAL SCHEDULES, LEGEND & NOTES
M002 MECHANICAL SCHEDULES
MD101 CLASSROOMS A–B, C–D MECHANICAL DEMOLITION PLANS
MD102 CLASSROOMS E–F, G–H MECHANICAL DEMOLITION PLANS
MD103 CLASSROOMS I–J, N MECHANICAL DEMOLITION PLANS
MD104 CLASSROOMS L & M MECHANICAL DEMOLITION PLANS
MD105 CLASSROOMS R & T MECHANICAL DEMOLITION PLANS
MD106 BUILDINGS K & O MECHANICAL DEMOLITION PLANS
1 MD107 BUILDINGS P & Q MECHANICAL DEMOLITION PLANS
M101 CLASSROOMS A–B, C–D MECHANICAL FLOOR PLANS
M102 CLASSROOMS E–F, G–H MECHANICAL FLOOR PLANS
M103 CLASSROOMS I–J, N MECHANICAL FLOOR PLANS
M104 CLASSROOMS L & M MECHANICAL FLOOR PLANS
M105 CLASSROOMS R & T MECHANICAL FLOOR PLANS
M106 BUILDINGS K & O MECHANICAL FLOOR PLANS
1 M106.1 BUILDINGS K & O MECHANICAL FLOOR PLANS
M107 BUILDINGS P & Q MECHANICAL FLOOR PLANS
M109 MECHANICAL ROOF PLAN
M201 MECHANICAL DETAILS
M202 MECHANICAL DETAILS
M301 MECHANICAL CONTROL WIRING SCHEMATICS
M302 MECHANICAL CONTROL WIRING SCHEMATICS
M401 MECHANICAL T–24 COMPLIANCE
M402 MECHANICAL T–24 COMPLIANCE

PLUMBING

P001 PLUMBING SCHEDULES
P002 PLUMBING SITE PLAN
P003 PLUMBING SITE PLAN
P004 GAS DISTRIBUTION SITE PLAN
PD101 CLASSROOMS A–B, C–D PLUMBING DEMOLITION PLANS
PD102 CLASSROOMS E–F, G–H PLUMBING DEMOLITION PLANS
PD103 CLASSROOMS I–J, N PLUMBING DEMOLITION PLANS
PD104 CLASSROOMS L & M PLUMBING DEMOLITION PLANS
PD105 CLASSROOMS R & T PLUMBING DEMOLITION PLANS
1 PD106 BUILDINGS K & O PLUMBING DEMOLITION PLANS
PD107 BUILDINGS P & Q PLUMBING DEMOLITION PLANS
PD108 BUILDINGS S & X PLUMBING DEMOLITION PLANS
P101 CLASSROOMS A–B, C–D PLUMBING FLOOR PLANS
P102 CLASSROOMS E–F, G–H PLUMBING FLOOR PLANS
P103 CLASSROOMS I–J, N PLUMBING FLOOR PLANS
P104 CLASSROOMS L & M PLUMBING FLOOR PLANS
P104.1 CLASSROOM L WASTE PIPING FLOOR PLAN
P105 CLASSROOMS R & T PLUMBING FLOOR PLANS
P106 BUILDINGS K & O PLUMBING FLOOR PLANS
P107 BUILDINGS P & Q PLUMBING FLOOR PLANS
P108 BUILDINGS S & X PLUMBING FLOOR PLANS
P110 PLUMBING DETAILS
P111 PLUMBING DETAILS
P301 ENLARGED PLUMBING PLANS
P302 ENLARGED PLUMBING PLANS

ELECTRICAL

E000 SYMBOL LIST, GENERAL NOTES & FIXTURE SCHEDULE
E001 ELECTRICAL SITE PLAN
E002 COMPLIANCE FORMS & FIXTURE SCHEDULE
E003 SINGLE LINE DIAGRAM
E004 PANEL SCHEDULES
E005 PANEL SCHEDULES
E006 FIRE ALARM SYSTEM INFORMATION
E007 FIRE ALARM DETAILS
E008 FIRE ALARM RISER DIAGRAMS
E009 FIRE ALARM CALCULATIONS
E101 CLASSROOM BUILDINGS A–B, C–D LIGHTING PLANS
E102 CLASSROOM BUILDINGS E–F, G–H LIGHTING PLANS
E103 CLASSROOM BUILDINGS I–J, N LIGHTING PLANS
E104 CLASSROOM BUILDINGS L & M LIGHTING PLANS
E105 CLASSROOM BUILDINGS R & T LIGHTING PLANS
1 E106 BUILDINGS K & O LIGHTING PLANS
E201 CLASSROOM BUILDINGS A–B, C–D POWER PLANS
E202 CLASSROOM BUILDINGS E–F, G–H POWER PLANS
E203 CLASSROOM BUILDINGS I–J, N POWER PLANS
E204 CLASSROOM BUILDINGS L & M POWER PLANS
E205 CLASSROOM BUILDINGS R & T POWER PLANS
1 E206 BUILDINGS K & O POWER PLANS
~~E209 RELOCATABLE CLASSROOMS POWER PLANS~~
E301 CLASSROOM BUILDINGS A–B, C–D SIGNAL PLANS
E302 CLASSROOM BUILDINGS E–F, G–H SIGNAL PLANS
E303 CLASSROOM BUILDINGS I–J, N SIGNAL PLANS
E304 CLASSROOM BUILDINGS L & M SIGNAL PLANS
E305 CLASSROOM BUILDINGS R & T SIGNAL PLANS
E306 BUILDINGS K & O SIGNAL PLANS
1 E307 BUILDINGS P & Q ELETRICAL PLANS
E308 BUILDINGS S & X SIGNAL PLANS
~~E309 RELOCATABLE CLASSROOMS SIGNAL PLANS~~
~~E310 RELOCATABLE CLASSROOMS SIGNAL PLANS~~
E401 CLASSROOM BUILDINGS A–B, C–D FIRE ALARM PLANS
E402 CLASSROOM BUILDINGS E–F, G–H FIRE ALARM PLANS
E403 CLASSROOM BUILDINGS I–J, N FIRE ALARM PLANS
E404 CLASSROOM BUILDINGS L & M FIRE ALARM PLANS
E405 CLASSROOM BUILDINGS R & T FIRE ALARM PLANS
E406 BUILDINGS K & O FIRE ALARM PLANS
E407 BUILDINGS P & Q FIRE ALARM PLANS
E408 CLASSROOM BUILDINGS S & X FIRE ALARM PLANS
~~E409 RELOCATABLE CLASSROOMS FIRE ALARM PLANS~~
1 ~~E410 RELOCATABLE CLASSROOMS FIRE ALARM PLANS~~
E501 ELECTRICAL DETAILS
E502 ELECTRICAL DETAILS

VICINITY MAP

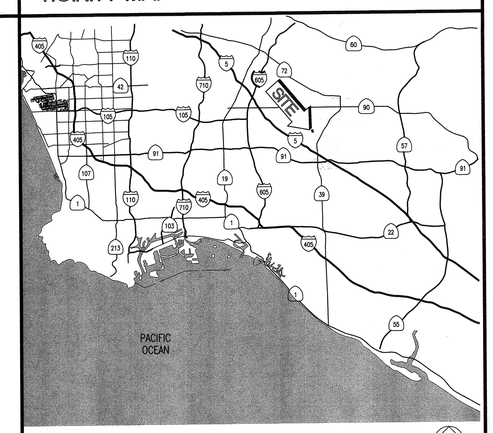

LOCATION MAP

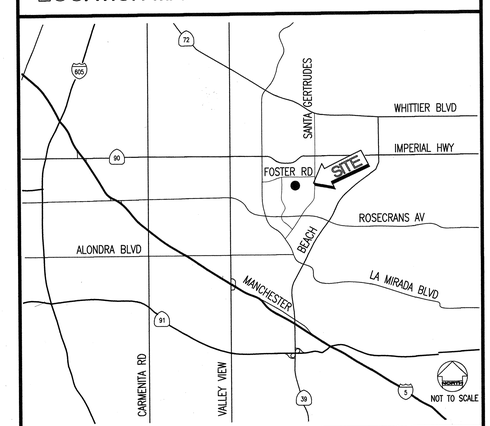

AUTOMATIC FIRE ALARM COMPLETE PLAN SUBMITTAL

REVISED
IDENTIFICATION STAMP
DIV. OF THE STATE ARCHITECT
OFFICE OF REGULATION SERVICES
FILE NO. 19–H51
APPL. NO. 03–106434
AC FLS NLT SS
DATE
MAY 12 2004

FOR REFERENCE ONLY

Dougherty + Dougherty
Architecture • Planning • Interior Design
3194-D Airport Loop Drive
Costa Mesa, CA 92626
(714) 427-0277

Copyright © 2002 Dougherty + Dougherty

Architect Seal

Consultant Seal

LA MIRADA HIGH SCHOOL
MODERNIZATION
NORWALK - LA MIRADA UNIFIED SCHOOL DISTRICT
13520 ADELFA DRIVE LA MIRADA, CA 90638

COVER SHEET

Date:	04–01–04
Job:	20237.50
Scale:	AS NOTED
Drawn:	
Revisions:	
1	12–01–03

G001

ABBREVIATIONS

&	AND
∠	ANGLE
@	AT
℄	CENTERLINE
ø	DIAMETER OR ROUND
A.B.	ANCHOR BOLT
A.F.F.	ABOVE FINISH FLOOR
A.C.	ASPHALTIC CONCRETE
ADJ.	ADJACENT
ALUM.	ALUMINUM
APPROX.	APPROXIMATELY
ARCH.	ARCHITECT
BD.	BOARD
BET.	BETWEEN
BLDG.	BUILDING
BLK.	BLOCK
BLKG.	BLOCKING
BM.	BEAM
CAB.	CABINET
C.B.	CATCH BASIN/CHALKBOARD
C.F.	CURB FACE
C.I.	CAST IRON
C.J.	CONTROL JOINT
CLG.	CEILING
C.O.	CONCRETE OPENING
COL.	COLUMN
COMPO.	COMPOSITION
CONC.	CONCRETE
C.M.U.	CONCRETE MASONRY UNITS
CONT.	CONTINUOUS
CONTR.	CONTRACTOR
CORR.	CORRIDOR
DET.	DETAIL
D.F.	DOUGLAS FIR
D.G.	DECOMPOSED GRANITE
DIA.	DIAMETER
DIM.	DIMENSION
DP	DISABLED PERSON
DIS.	DISPENSER
DIV.	DIVISION
DN.	DOWN
DBL.	DOUBLE
DF.	DRINKING FOUNTAIN
DRY S.	DRY STANDPIPE
D.S.	DOWNSPOUT
DWG.	DRAWING
(E)	EXISTING
EA.	EACH
E.J.	EXPANSION JOINT
ELEC.	ELECTRIC
ELEV.	ELEVATION
ENT.	ENTRANCE
EMER.	EMERGENCY
ENCL.	ENCLOSURE
EQ.	EQUAL
EQUIP.	EQUIPMENT
EXIST.	EXISTING
E.G.	EXISTING GRADE
EXPO.	EXPOSED
EXP.	EXPANSION
EXT.	EXTERIOR
F.D.	FLOOR DRAIN
F.E.	FIRE EXTINGUISHER (WALL HUNG)
F.E.C.	FIRE EXTINGUISHER & CABINET
F.F.	FINISH FLOOR
F.G.	FINISH GRADE
F.H.W.S.	FLATHEAD WOOD SCREWS
FIN.	FINISH
F.L.	FLOW LINE
FLASH.	FLASHING
F.L.F.D.	FUSIBLE LINK FIRE DAMPER
FLUOR.	FLUORESCENT
F.O.C.	FACE OF CONCRETE
F.O.F.	FACE OF FINISH
F.O.M.	FACE OF MASONRY
F.O.S.	FACE OF STUD
F.O.V.	FACE OF VENEER
F.R.A.	FIRE RATED ASSEMBLY
F.R.P.	FIBERGLASS REINFORCED PANELS
F.S.	FINISH SURFACE
FT.	FOOT OR FEET
FURR.	FURRING
F.V	FIELD VERIFY
GA.	GAUGE
GALV.	GALVANIZE
G.I.	GALVANIZED IRON
GL.	GLASS
GLU. LAM.	GLUE LAMINATED
GND.	GROUND
GR.	GRADE
GYP.	GYPSUM
H.B.	HOSE BIBB
H.M.	HOLLOW METAL
HORIZ.	HORIZONTAL
HR.	HOUR
HT.	HEIGHT
HTG.	HEATING
HDWD.	HARDWOOD
I.D.	INSIDE DIAMETER
INSUL.	INSULATION
INT.	INTERIOR
INV.	INVERT
ISA	INTERNATIONAL SYMBOL OF ACCESSIBILITY
JAN.	JANITOR
JT.	JOINT
KIT.	KITCHEN
LAB.	LABORATORY
LAM. PLAS.	LAMINATED PLASTIC
LAV.	LAVATORY
LVR.	LOUVER
MAR.	MARBLE
MAT'L.	MATERIAL
MAX.	MAXIMUM
M.C.	MEDICINE CABINET
M.C.B.	METAL CORNER BEAD
MECH.	MECHANICAL
MET.	METAL
MFR.	MANUFACTURER
MIN.	MINIMUM
MISC.	MISCELLANEOUS
M.O.	MASONRY OPENING
MTD.	MOUNTED
MUL.	MULLION
N.	NORTH
NAT.	NATURAL
N.G.	NATURAL GRADE
N.I.C.	NOT IN CONTRACT
NO./#	NUMBER
NOM.	NOMINAL
N.T.S.	NOT TO SCALE
O.A.	OVERALL
OBS.	OBSCURE
O.C.	ON CENTER
O.D.	OUTSIDE DIAMETER
O.F.C.I.	OWNER FURNISHED CONTRACTOR INSTALLED
O.F.O.I.	OWNER FURNISHED OWNER INSTALLED
O.H.	OPPOSITE HAND
OPG.	OPENING
OSA.	OUTSIDE AIR
PART.	PARTITION
P.D.F.	POWER DIVEN FASTENER
P.H.	PANIC HARDWARE
PL.	PLATE
P.L.	PROPERTY LINE
PLAS.	PLASTER
PLYWD.	PLYWOOD
PR.	PAIR
P.J.	PLASTIC CONTROL JOINT
R.	RISER
R.B.	RUBBER BASE
RAD.	RADIUS
RDWD.	REDWOOD
REF.	REFERENCE
REFR.	REFRIGERATOR
REG.	REGISTER
REINF.	REINFORCEMENT
REQ'D.	REQUIRED
RESIL.	RESILIENT
REV.	REVERSE
RM.	ROOM
R.O.	ROUGH OPENING
RO.	ROUGH
S.	SOUTH
S.B.	SPLASH BLOCK
S.D.	STORM DRAIN
S.C.	SOLID CORE
SCHED.	SCHEDULE
SECT.	SECTION
SHT.	SHEET
SIM.	SIMILAR
S.J.	SAW OR SCORE JOINT
SLD'G.	SLIDING
SM. F.	SMOOTH FACE
SPEC.	SPECIFICATIONS
SP. F.	SPLIT FACE
SQ.	SQUARE
S.S.	SERVICE SINK
SST.	STAINLESS STEEL
STAT.	STATIONARY
STD.	STANDARD
STL.	STEEL
STRUCT.	STRUCTURAL
SUSP.	SUSPENDED
S.W.W.	STEEL WINDOW WALL
SYM.	SYMMETRICAL
T.	TREAD
T.B.	TACKBOARD
T. & B.	TOP & BOTTOM
T.C.	TOP OF CURB
T.D.	TOWEL DISPENSER
T.G.	TOP OF GRATE
T. & G.	TONGUE & GROOVE
T.O.P.	TOP OF PARAPET
T.P	TOP OF PAVING
T.O.S.	TOP OF STEEL FRAMING
T.W.	TOP OF WALL
TEL.	TELEPHONE
TEMP.	TEMPERATURE
TERR.	TERRAZZO
TR.	TRANSOM
TRANSF.	TRANSFORMER
TYP.	TYPICAL
U.N.O.	UNLESS NOTED OTHERWISE
U.O.F.	UNDERSIDE OF FRAME
U.O.N.	UNLESS OTHERWISE NOTED
UR.	URINAL
V.	VENT
VAR.	VARIES
V.C.T.	VINYL COMPOSITION TILE
VERT.	VERTICAL
VEST.	VESTIBULE
V.F.W.C.	VINYL FABRIC WALL COVERING
V.G.D.F.	VERTICAL GRAIN DOUGLAS FIR
W.	WEST
W/	WITH
W.C.	WATER CLOSET
WD.	WOOD
W. GL.	WIRE GLASS
W.I.	WROUGHT IRON
W.M.P.	WIRE MESH PARTITION
WP.	WATERPROOF
WR.	WATER RESISTANT

SYMBOLS

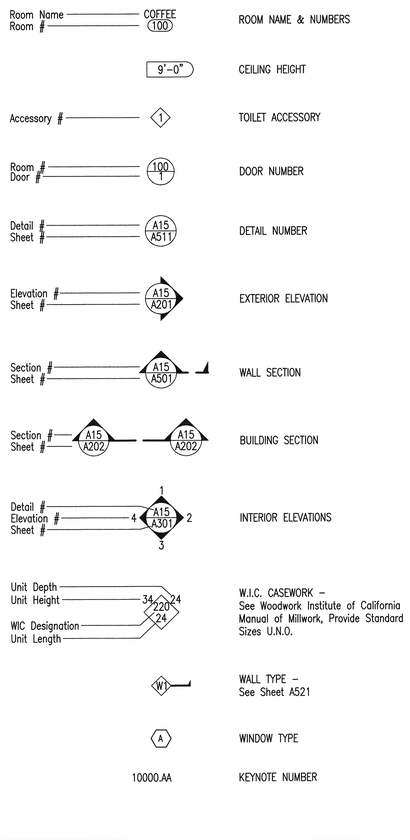

APPLICABLE CODES

LIST OF 2001 CALIFORNIA CODE OF REGULATIONS (C.C.R.):

PART 1 – 2001 CALIFORNIA STANDARDS ADMINISTRATIVE CODE, TITLE 24, C.C.R.

PART 2 – 2001 CALIFORNIA BUILDING CODE (CBC), TITLE 24, C.C.R., VOLUME 1, 2 AND 3. (1997 U.B.C. VOL. 1, 2 AND 3, AND 2001 CALIFORNIA AMMENDMENTS)

PART 3 – 2001 CALIFORNIA ELECTRICAL CODE (CEC), TITLE 24, C.C.R., (1996 NATIONAL ELECTRICAL CODE AND 2001 CALIFORNIA AMENDMENTS)

PART 4 – 2001 CALIFORNIA MECHANICAL CODE (CMC), TITLE, 24 C.C.R., (1997 UNIFORM MECHANICAL CODE AND 2001 CALIFORNIA AMMENDMENTS)

PART 5 – 2001 CALIFORNIA PLUMBING CODE (CPC), TITLE 24, C.C.R., (1997 UNIFORM PLUMBING CODE AND 2001 CALIFORNIA AMMENDMENTS)

PART 6 – 2001 CALIFORNIA ENERGY CODE (CEC), TITLE 24, C.C.R.,

PART 7 – 2001 CALIFORNIA ELEVATOR SAFETY CONSTRUCTION CODE, TITLE 24, C.C.R.,

PART 9 – 2001 CALIFORNIA FIRE CODE (CFC), TITLE 24, C.C.R., (1997 UNIFORM FIRE CODE AND 2001 CALIFORNIA AMMENDMENTS)

PART 12 – 2001 CALIFORNIA REFERENCE STANDARDS CODE (CRSC), TITLE 24, C.C.R.
1990 REGULATIONS OF THE STATE FIRE MARSHALL, TITLE 19, DIVISION 1, C.C.R.

PARTIAL LIST OF APPLICABLE NFPA STANDARDS:
2001 CALIFORNIA BUILDING CODE (FOR SFM) NATIONAL STANDARDS SECTION 3504.1.3

NFPA 13	– AUTOMATIC FIRE SPRINKLER SYSTEMS	1999 EDITION
NFPA 14	– STANDPIPE SYSTEMS	2000 EDITION
NFPA 17A	– WET CHEMICAL SYSTEMS	1998 EDITION
NFPA 24	– PRIVATE FIRE MAINS	1995 EDITION
NFPA 72	– (CALIFORNIA AMENDED) – NATIONAL FIRE ALARM CODES	1999 EDITION

1

GENERAL NOTES

1. VERIFY ALL DIMENSIONS, LOCATIONS OF EXISTING UTILITIES, AND CONDITIONS ON THE JOB SITE PRIOR TO THE START OF WORK OR PORTIONS OF THE WORK. NOTIFY THE ARCHITECT IMMEDIATELY OF ANY DISCREPANCIES BETWEEN THE ACTUAL FIELD CONDITIONS AND THE CONSTRUCTION DOCUMENTS. EXISTING CONDITIONS ARE INDICATED AS A RESULT OF FIELD OBSERVATIONS, INFORMATION SHOWN ON AVAILABLE DOCUMENTS AND FIELD CONDITIONS AT THE TIME OF PREPARATION.
2. ALL MATERIALS AND WORKMANSHIP SHALL COMPLY WITH ALL GOVERNING CODES, ORDINANCES, REGULATIONS AND LAWS.
3. THE DESIGN ADEQUACY AND SAFETY OF ERECTION BRACING, SHORING, TEMPORARY SUPPORTS AND SCAFFOLDING IS THE SOLE RESPONSIBILITY OF THE CONTRACTOR.
4. WHERE ANY CONFLICT OCCURS BETWEEN THE REQUIREMENTS OF LAWS, CODES, ORDINANCES, RULES AND REGULATIONS, THE MOST STRINGENT SHALL GOVERN.
5. IN NO CASE SHALL WORKING DIMENSIONS BE SCALED FROM PLANS, SECTIONS OR DETAILS ON THE DRAWINGS.
6. DETAILS MARKED 'TYPICAL' SHALL APPLY IN ALL CASES UNLESS SPECIFICALLY NOTED OTHERWISE.
7. WHERE NO SPECIFIC DETAIL IS SHOWN, THE FRAMING OR CONSTRUCTION SHALL BE IDENTICAL OR SIMILAR TO THAT INDICATED FOR LIKE CASES OF CONSTRUCTION.
8. ENACT ALL MEASURES TO PROTECT AND SAFEGUARD ALL EXISTING ELEMENTS TO REMAIN FROM BEING DAMAGED. REPLACE OR REPAIR EXISTING ELEMENTS DAMAGED BY THE EXECUTION OF THIS CONTRACT TO EQUAL OR BETTER CONDITION.
9. WHERE NEW CONSTRUCTION ABUTS EXISTING FINISHED SURFACES, CONTRACTOR SHALL ALIGN NEW CONSTRUCTION SO THAT NEW FINISHES ARE FLUSH WITH EXISTING. MATCH EXISTING TEXTURES AND COLORS.
10. PRIOR TO THE START OF WORK THE CONTRACTOR SHALL COORDINATE BETWEEN THE REQUIREMENTS OF ALL DISCIPLINES HEREIN AND BETWEEN THE REQUIREMENTS OF ALL DRAWINGS AND SPECIFICATIONS IN ORDER THAT ALL ITEMS RELATE TO ONE ANOTHER. NOTIFY ARCHITECT IMMEDIATELY REGARDING ANY ITEMS THAT CANNOT BE COORDINATED.
11. KEYNOTES REFERENCE SPECIFICATION SECTIONS BY MEANS OF A FIVE–DIGIT NUMBER IDENTIFYING THE SECTION WHERE A MORE COMPLETE DESCRIPTION OF THE ITEM INDICATED WILL BE FOUND. THE LETTER SUFFIX OF THE KEYNOTE DOES NOT RELATE TO ANY CORRESPONDING REFERENCE LETTER IN THE SPECIFICATION. KEYNOTES DO NOT DESCRIBE CONSTRUCTION MEANS, METHODS, TECHNIQUES, SEQUENCES, OR PROCEDURES. NO TRADE JURISDICTIONAL ALLOCATION OF THIS WORK IS INTENDED BY THE SUBDIVISION OF THESE KEYNOTES. IT SHALL BE THE CONTRACTOR'S SOLE RESPONSIBILITY TO SUBDIVIDE THE WORK IN THE MANNER HE DEEMS NECESSARY.
12. THE INTENT OF THESE DRAWINGS AND SPECIFICATIONS IS THAT THE WORK OF ALTERATION, REHABILITATION OR RECONSTRUCTION IS TO BE IN ACCORDANCE WITH TITLE 24, CALIFORNIA CODE OF REGULATIONS. SHOULD ANY EXISTING CONDITIONS SUCH AS DETERIORATION OR NON COMPLYING CONSTRUCTION BE DISCOVERED WHICH IS NOT COVERED BY THE CONTRACT DOCUMENTS WHEREIN THE FINISHED WORK WILL NOT COMPLY WITH TITLE 24, CALIFORNIA CODE OF REGULATIONS, A CHANGE ORDER OR A SEPARATE SET OF PLANS AND SPECIFICATIONS, DETAILING AND SPECIFYING THE REQUIRED WORK SHALL BE SUBMITTED TO AND APPROVED BY THE DIVISION OF THE STATE ARCHITECT BEFORE PROCEEDING WITH THE WORK.
13. CONTRACTOR SHALL EXCERCISE EXTREME CAUTION IN EXCAVATING AND TRENCHING ON THIS SITE TO AVOID EXISTING DUCTS, PIPING, CONDUIT, ETC. AND TO PREVENT HAZARD TO PERSONNEL AND/OR TO EXISTING UNDERGROUND UTILITIES OR STRUCTURES. THE CONTRACTOR SHALL IMMEDIATELY NOTIFY THE ARCHITECT SHOULD SUCH UNIDENTIFIED CONDITIONS BE DISCOVERED. THESE DRAWINGS AND SPECIFICATIONS DO NOT INCLUDE THE NECESSARY COMPONENTS FOR CONSTRUCTION SAFETY.
14. CHANGES TO THE APPROVED DRAWINGS AND/OR SPECIFICATIONS SHALL BE MADE BY ADDENDA OR A CHANGE ORDER APPROVED BY THE DIVISION OF THE STATE ARCHITECT, AS REQUIRED BY SECTION 4–338, PART 1, TITLE 24, C.C.R..
15. A CLASS 2 CERTIFIED PROJECT INSPECTOR, EMPLOYED BY THE DISTRICT (OWNER) AND APPROVED BY THE DIVISION OF THE STATE ARCHITECT, SHALL PROVIDE CONTINUOUS INSPECTION OF THE WORK. THE DUTIES OF THE INSPECTOR ARE DEFINED IN SECTION 4–342, PART 1, TITLE 24, C.C.R..
16. ALL DIMENSIONS ARE TO GRID LINES, FACE OF CONCRETE, FACE OF CONCRETE MASONRY UNITS AND FACE OF STUDS UNLESS NOTED OTHERWISE.
17. CONTRACTOR'S SAFETY BARRICADE (TEMPORARY FENCING) SHALL BE PROVIDED BY CONTRACTOR TO PROTECT STUDENTS, FACULTY, STAFF AND PUBLIC FROM CONSTRUCTION ACTIVITIES. CONTRACTOR'S SAFETY BARRICADE SHALL PROTECT AND SECURE CONSTRUCTION AREA. TEMPORARY FENCING SHALL ALSO BE PROVIDED BY CONTRACTOR TO PROTECT AND SECURE STORAGE YARDS. EXACT LOCATION OF CONTRACTOR'S SAFETY BARRICADE AND OTHER TEMPORARY FENCING SHALL BE APPROVED BY THE DISTRICT INSPECTOR PRIOR TO INSTALLATION.
18. ALL MECHANICAL AND PLUMBING PIPINGS SHALL BE CONCEALED, U.N.O. COORDINATE PIPING LOCATIONS WITH STRUCTURAL AND MECHANICAL ITEMS PRIOR TO INSTALLATIONS. NO STRUCTURAL SUPPORT MEMBERS SHALL BE PENETRATED PRIOR TO WRITTEN PERMISSION FROM THE STRUCTURAL ENGINEER.
19. CUTTING, BORING, SAWCUTTING OR DRILLING THROUGH THE EXISTING OR NEW STRUCTURAL ELEMENTS IS NOT TO BE STARTED UNTIL THE DETAILS HAVE BEEN REVIEWED AND APPROVED BY THE ARCHITECT, STRUCTURAL ENGINEER AND THE D.S.A. FIELD ENGINEER IF DETAILS DO NOT SHOW OR CONFORM TO THE APPROVED DRAWINGS.

KEYNOTES

KEYNOTES REFERENCE SPECIFICATION SECTIONS BY MEANS OF A FIVE–DIGIT NUMBER IDENTIFYING THE SECTION WHERE A MORE COMPLETE DESCRIPTION OF THE ITEM INDICATED WILL BE FOUND. THE LETTER SUFFIX OF THE KEYNOTE DOES NOT RELATE TO ANY CORRESPONDING REFERENCE LETTER IN THE SPECIFICATION. KEYNOTES DO NOT DESCRIBE CONSTRUCTION MEANS, METHODS, TECHNIQUES, SEQUENCES, OR PROCEDURES. NO TRADE JURISDICTIONAL ALLOCATION OF THIS WORK IS INTENDED BY THE SUBDIVISION OF THESE KEYNOTES. IT SHALL BE THE CONTRACTOR'S SOLE RESPONSIBILITY TO SUBDIVIDE THE WORK IN THE MANNER HE DEEMS NECESSARY.

REVISED
IDENTIFICATION STAMP
DIV. OF THE STATE ARCHITECT
OFFICE OF REGULATION SERVICES
FILE NO. 19–H51
APPL. NO. 03–106434
AC. FLS. SS.
DATE
MAY 12 2004

Dougherty + Dougherty
Architecture • Planning • Interior Design
3194–D Airport Loop Drive
Costa Mesa, CA 92626
(714) 437–0277

Copyright © 2002 Dougherty + Dougherty

LICENSED ARCHITECT
GRANT A. DOUGHERTY
No. 6362
STATE OF CALIFORNIA
Architect Seal

Consultant Seal

LA MIRADA HIGH SCHOOL
MODERNIZATION
NORWALK - LA MIRADA UNIFIED SCHOOL DISTRICT
13520 ADELFA DRIVE LA MIRADA, CA 90638

ABBREVIATIONS, SYMBOLS & NOTES

Date:	04–01–04
Job:	20237.50
Scale:	AS NOTED
Drawn:	
Revisions:	
1	12–01–03

G002

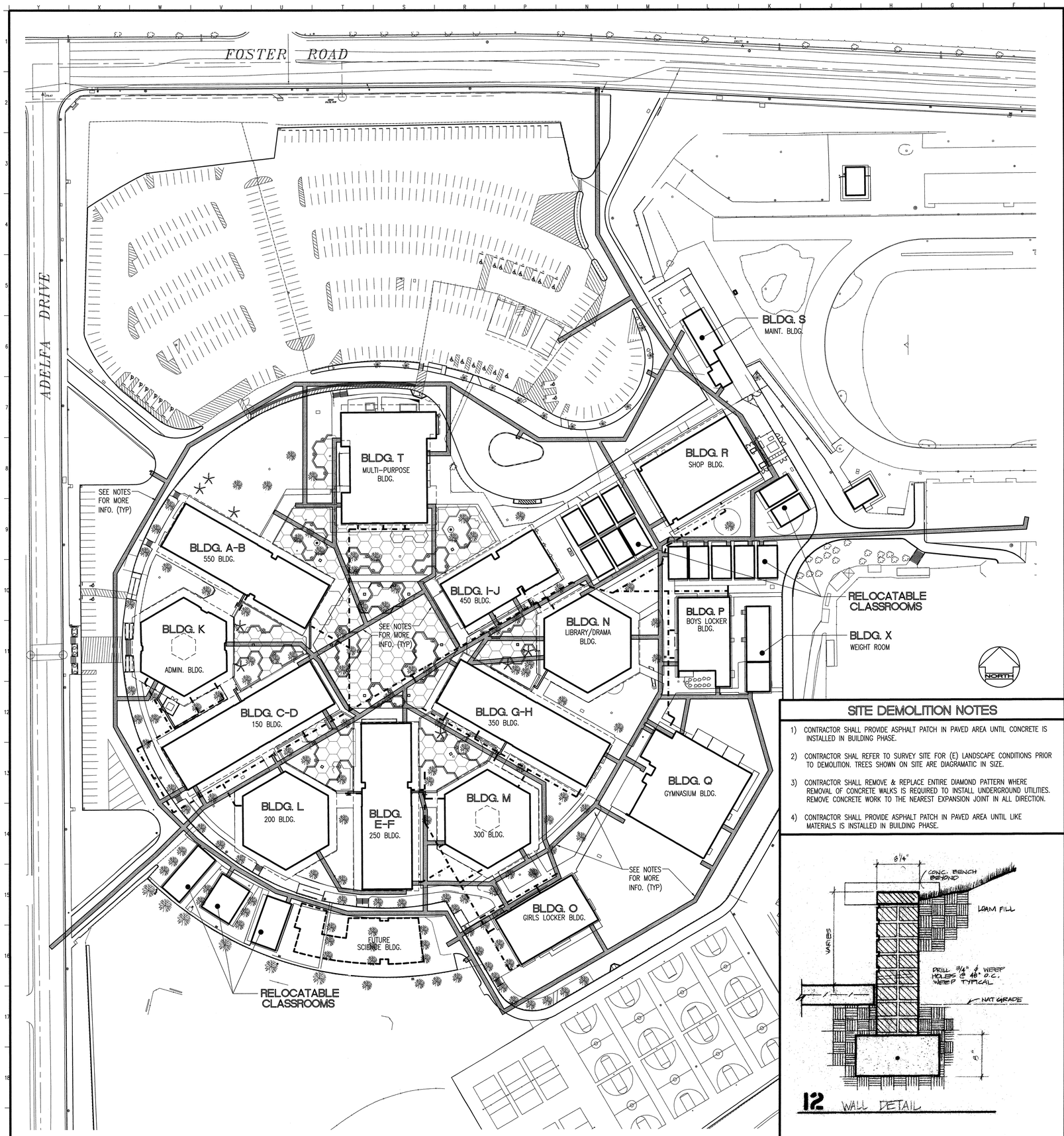

TRENCHING PLAN | K19 | 1"=50'

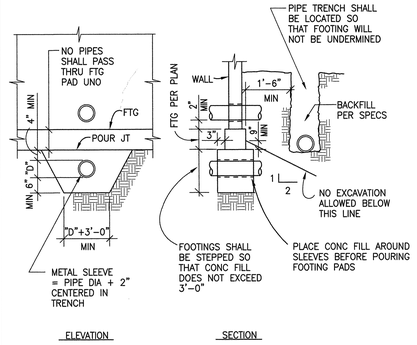

PIPE TRENCHING FOOTING DETAIL | A4 | 1"=1'-0"

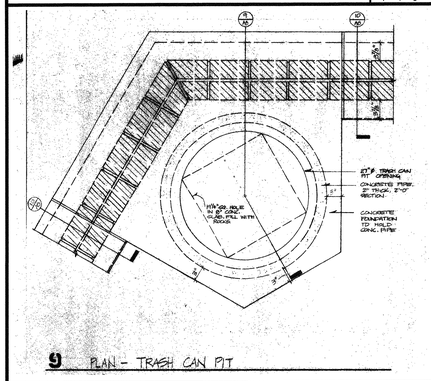

9 PLAN - TRASH CAN PIT

EXISTING TRASH CAN PLAN • PLANTERS | A9 | NTS

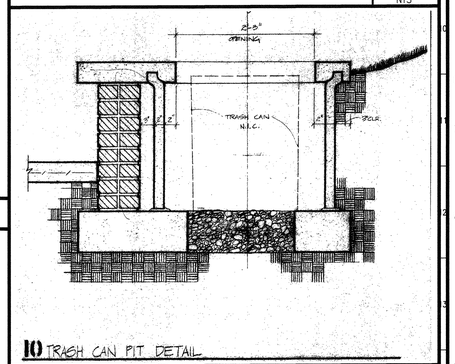

10 TRASH CAN PIT DETAIL

EXISTING TRASH CAN DETAIL • PLANTERS | A14 | NTS

SITE DEMOLITION NOTES

1) CONTRACTOR SHALL PROVIDE ASPHALT PATCH IN PAVED AREA UNTIL CONCRETE IS INSTALLED IN BUILDING PHASE.
2) CONTRACTOR SHAL REFER TO SURVEY SITE FOR (E) LANDSCAPE CONDITIONS PRIOR TO DEMOLITION. TREES SHOWN ON SITE ARE DIAGRAMATIC IN SIZE.
3) CONTRACTOR SHALL REMOVE & REPLACE ENTIRE DIAMOND PATTERN WHERE REMOVAL OF CONCRETE WALKS IS REQUIRED TO INSTALL UNDERGROUND UTILITIES. REMOVE CONCRETE WORK TO THE NEAREST EXPANSION JOINT IN ALL DIRECTION.
4) CONTRACTOR SHALL PROVIDE ASPHALT PATCH IN PAVED AREA UNTIL LIKE MATERIALS IS INSTALLED IN BUILDING PHASE.

12 WALL DETAIL

EXISTING PLANTER DETAIL | F19 | NTS

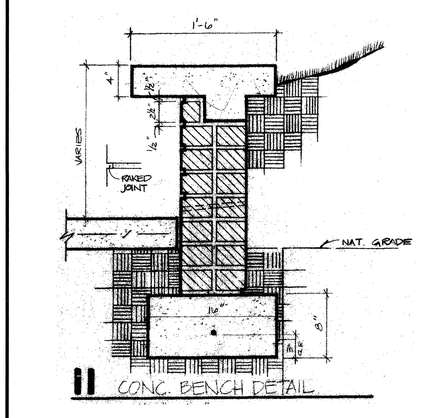

11 CONC. BENCH DETAIL

EXISTING PLANTER DETAIL | A19 | NTS

KEYNOTES

KEYNOTES REFERENCE SPECIFICATION SECTIONS BY MEANS OF A FIVE-DIGIT NUMBER IDENTIFYING THE SECTION WHERE A MORE COMPLETE DESCRIPTION OF THE ITEM INDICATED WILL BE FOUND. THE LETTER SUFFIX OF THE KEYNOTE DOES NOT RELATE TO ANY CORRESPONDING REFERENCE LETTER IN THE SPECIFICATION. KEYNOTES DO NOT DESCRIBE CONSTRUCTION MEANS, METHODS, TECHNIQUES, SEQUENCES, OR PROCEDURES. NO TRADE JURISDICTIONAL ALLOCATION OF THIS WORK IS INTENDED BY THE SUBDIVISION OF THESE KEYNOTES. IT SHALL BE THE CONTRACTOR'S SOLE RESPONSIBILITY TO SUBDIVIDE THE WORK IN THE MANNER HE DEEMS NECESSARY.

SITE LEGEND

- BUILDING TO BE MODERNIZED
- UTILITY TRENCH. SEE PLUMBING AND ELECTRICAL DWGS FOR ADDITIONAL INFORMATION. REFER TO SITE NOTES BELOW.
- SEWER TRENCH. SEE PLUMBING DWGS FOR ADDITIONAL INFORMATION REFER TO SITE NOTES & SITE DEMOLITION NOTES. CONTRACTOR TO COORDINATE WITH PHASING PLANS
- (E) LANDSCAPE

SITE NOTES

1) FOR TYPICAL SYMBOLS AND ABBREVIATIONS, SEE SHEET G002.
2) PROTECT AND SAFEGUARD FROM DAMAGES ALL EXISTING CONSTRUCTION AND FINISHES TO REMAIN.
3) PROVIDE TEMPORARY 6' HIGH CHAIN LINK FENCE ENCLOSURES WITH LOCKABLE GATES AS REQUIRED FOR CONSTRUCTION ACCESS AT CONTRACTOR'S STAGING AREA AND AROUND ALL CONSTRUCTION SITES AS DICTATED BY THE PHASING SCHEDULE
4) CONTRACTOR SHALL REMOVE HARDSCAPE & LANDSCAPE, PROVIDE TRENCHING, AND RESTORE HARDSCAPE & LANDCAPE AS REQ. FOR THE INSTALLATION OR REPAIR OF NEW AND EXISTING SITE UTILITIES. **COORDINATE W/ ALL DISCIPLINES.**
   WHERE REMOVAL OF CONCRETE WALKS, MOWS TRIPS, CURBS AND GUTTERS IS REQUIRED TO INSTALL UNDERGROUND UTILITIES, REMOVE THE CONCRETE WORK TO THE NEAREST EXISTING EXPANSION OR CONTROL JOINT (SAW CUT IF REQUIRED).
   CURBS AND GUTTERS MAY BE REMOVED IN MINIMUM LENGTHS OF 6' IF THE DISTANCE BETWEEN EXISTING JOINTS IS 12' OR MORE. REPLACE REMOVED WORK WITH REINFORCED CONCRETE TO MATCH ADJACENT EXISTING WORK IN PROFILE, JOINT LAYOUT AND FINISH. SEE SHEET A005 FOR SIMILAR DETAILS AND REINFORCING REQUIREMENTS. REPAIR CONCRETE WORK PER DETAIL M16/A005.
5) WHERE ASPHALT PAVING IS DAMAGED BY THE EXECUTION OF THIS CONTRACT, PATCH, REPAIR & RESTRIPE TO ORIGINAL OR BETTER CONDITION. REPAIR ASPHALT PARKING LOTS, SPEED BUMPS AND PAINTED CROSSWALKS DAMAGED BY THE EXECUTION OF THIS CONTRACT TO ORIGINAL OR BETTER CONDITION. REPAINT CROSSWALKS AND SPEED BUMP STRIPING THEIR FULL LENGTHS ACCROSS ROADWAYS.
6) WHERE (E) LAWNS ARE DAMAGED BY THE EXECUTION OF THIS CONTRACT, CLEAN, FILL, COMPACT, AND AND RE-SEED AREA TO MATCH ADJACENT UNDAMAGED AREA. RE-SEED WITH PERENNIAL RYE GRASS
7) CONTRACTOR SHALL MAINTAIN EXISTING PLANTING WITHIN THE JOB SITE FENCE ENCLOSURE DURING DEMOLITION AND CONSTRUCTION PHASES. EXISTING IRRIGATION SYSTEMS SHALL EITHER REMAIN OPERATIONAL FOR CONTRACTOR'S USE OR CONTRACTOR SHALL HAND WATER EXISTING PLANT MATERIALS AT LEAST ONCE A WEEK.
8) REPAIR EXISTING IRRIGATION SYSTEMS DAMAGED DURING THE EXECUTION OF THIS CONTRACT. REPLACE PLANT MATERIALS DAMAGED DURING THE CONSTRUCTION PROCESS WITH THE SAME SPECIES OF EQUAL OR GREATER SIZE. REPLACE REMOVED TREES WITH 24" BOX SPECIMEN SPECIE AS DIRECTED BY DISTRICT. COORDINATE THE REMOVAL, RELOCATION OR MODIFICATION OF EXISTING IRRIGATION LINES WITH THE DISTRICT PRIOR TO ANY TRENCHING, CLEARING OR GRUBBING, OR OTHER SITE EXCAVATIONS REQUIRED FOR NEW CONSTRUCTION.
9) REBUILD PLANTER WALLS DAMAGED BY CONSTRUCTION TO MATCH (E). SEE DETAILS ON SHEET AD001.
10) WHERE STAIRS OCCUR, PROVIDE HANDRAIL EXTENSIONS AT EACH HANDRAIL PER DETAIL A12/A006 & DISABLED ACCESS DIRECTIONAL SIGNAGE PER DETAIL R4/A005. PAINT ALL TREADS YELLOW COLOR PER R4/A006.

KEY PLAN

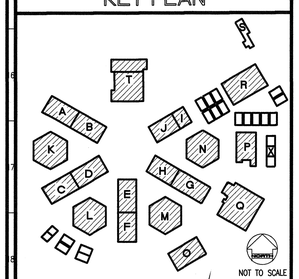

NOT TO SCALE

REVISED

IDENTIFICATION STAMP
DIV. OF THE STATE ARCHITECT
OFFICE OF REGULATION SERVICES
FILE NO. 19-H51
APPL. NO. 03-106434
AC FLS SS
DATE
MAY 1 2 2004

Dougherty ■ Dougherty
Architecture · Planning · Interior Design
2700 Laguna Canyon Drive
Costa Mesa, CA 92626
(714) 427-0277

Copyright © 2002 Dougherty + Dougherty

LICENSED ARCHITECT DOUGHERTY RICHARD C. 4/30/04 C-18024 STATE OF CALIFORNIA

Architect Seal

Consultant Seal

LA MIRADA HIGH SCHOOL MODERNIZATION
NORWALK - LA MIRADA UNIFIED SCHOOL DISTRICT
13520 ADELFA DRIVE LA MIRADA, CA 90638

TRENCHING PLAN

Date:	04-01-04
Job:	20237.50
Scale:	AS NOTED
Drawn:	
Revisions:	
1	12-01-03

AD001

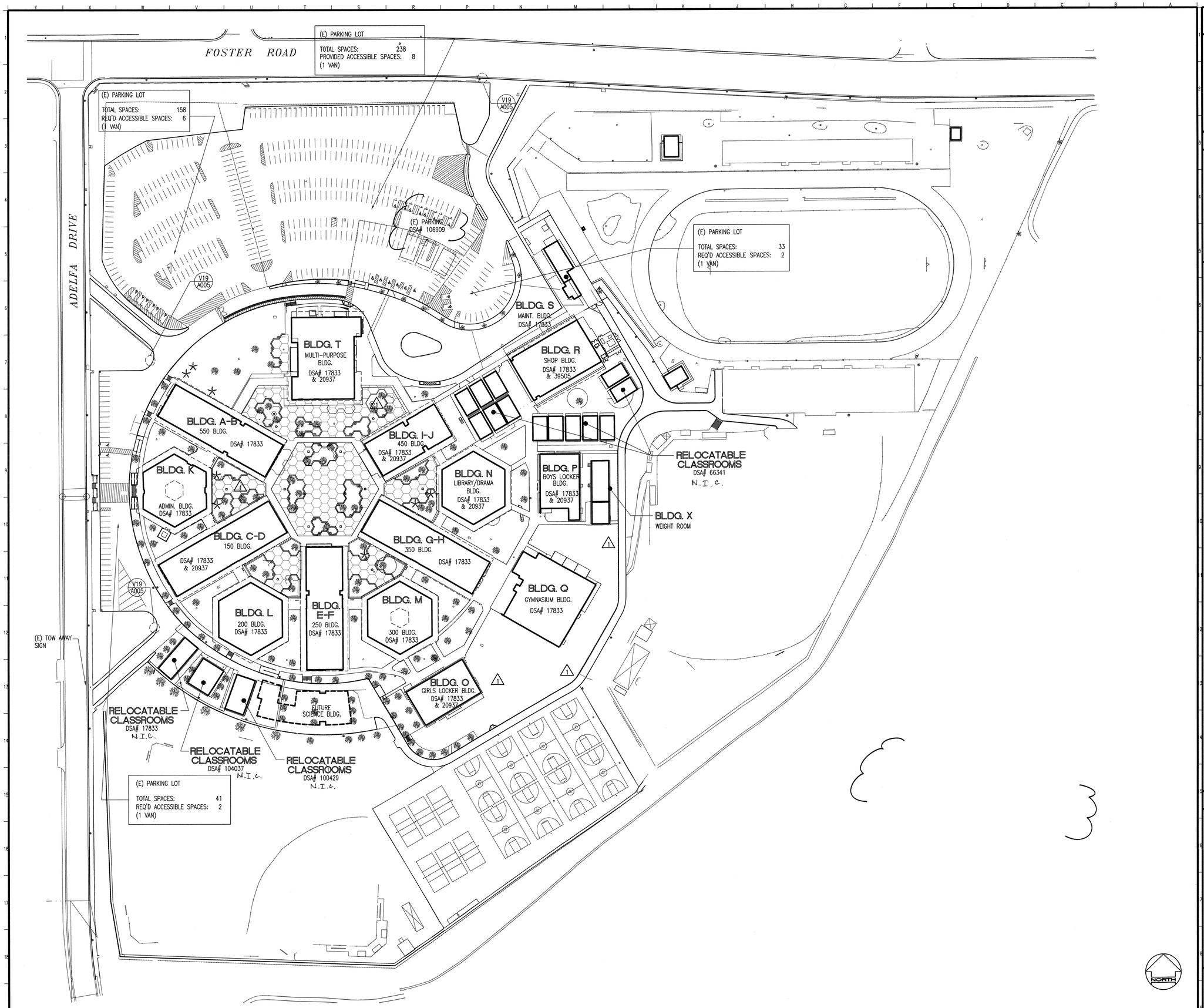

OVERALL SITE PLAN

A19
1"=60'

KEYNOTES

KEYNOTES REFERENCE SPECIFICATION SECTIONS BY MEANS OF A FIVE-DIGIT NUMBER IDENTIFYING THE SECTION WHERE A MORE COMPLETE DESCRIPTION OF THE ITEM INDICATED WILL BE FOUND. THE LETTER SUFFIX OF THE KEYNOTE DOES NOT RELATE TO ANY CORRESPONDING REFERENCE LETTER IN THE SPECIFICATION. KEYNOTES DO NOT DESCRIBE CONSTRUCTION MEANS, METHODS, TECHNIQUES, SEQUENCES, OR PROCEDURES. NO TRADE JURISDICTIONAL ALLOCATION OF THIS WORK IS INTENDED BY THE SUBDIVISION OF THESE KEYNOTES. IT SHALL BE THE CONTRACTOR'S SOLE RESPONSIBILITY TO SUBDIVIDE THE WORK IN THE MANNER HE DEEMS NECESSARY.

SITE LEGEND

KEY PLAN

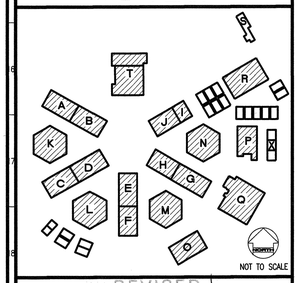

REVISED
MAY 1 2 2004

IDENTIFICATION STAMP
DIV. OF THE STATE ARCHITECT
OFFICE OF REGULATION SERVICES
FILE NO. 19-H51
APPL. NO. 03-106434
ACTN. ✓ FLS. N/T SS.
DATE

Dougherty + Dougherty
Architecture • Planning • Interior Design
3194-D Airport Loop Drive
Costa Mesa, CA 92626
(714) 427-0277

Copyright © 2002 Dougherty + Dougherty

Architect Seal

Consultant Seal

LA MIRADA HIGH SCHOOL
MODERNIZATION
NORWALK - LA MIRADA UNIFIED SCHOOL DISTRICT
13520 ADELFA DRIVE LA MIRADA, CA 90638

OVERALL
SITE PLAN

Date:	04-01-04
Job:	20237.50
Scale:	AS NOTED
Drawn:	
Revisions:	
1	12-01-03

A001

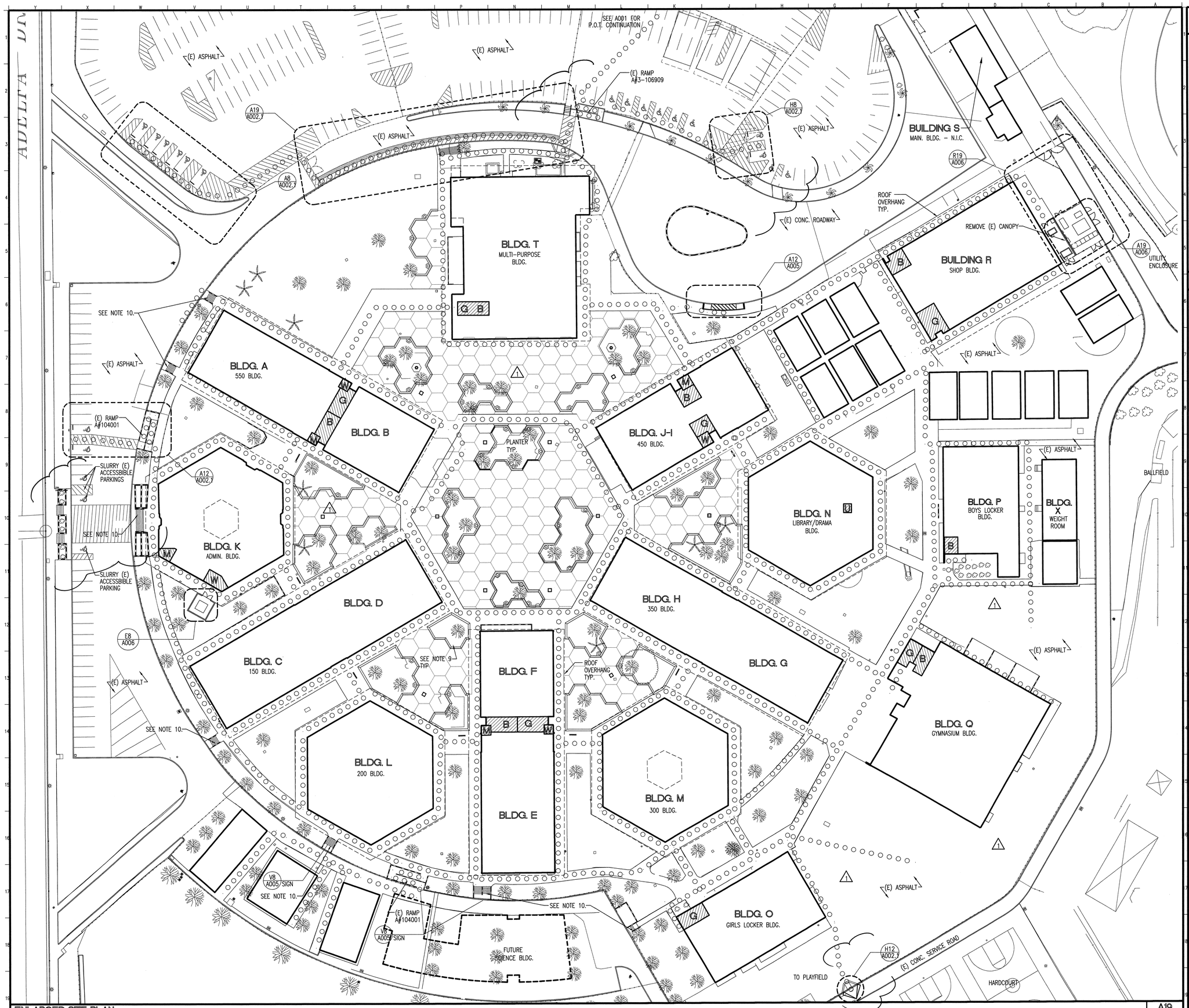

ENLARGED SITE PLAN

A19
1"=30'-0"

SITE LEGEND

- ACCESSIBLE TOILETS
- (E) LANDSCAPE
- (E) CONCRETE PAVING U.N.O.
- (E) DECORATIVE CONCRETE CONTROL JOINT PATTERN
- ACCESSIBLE PATH OF TRAVEL (BARRIER FREE WITH MAX. 2% CROSS SLOPE)

PATH OF TRAVEL, AS INDICATED, IS A BARRIER FREE ACCESS ROUTE WITHOUT ANY ABRUPT VERTICAL CHANGES EXCEEDING 1/2" AT 1:2 MAXIMUM SLOPE, EXCEPT FOR LEVEL CHANGES THAT DO NOT EXCEED 1/4" VERTICAL. MAXIMUM CROSS-SLOPE 2% TYPICAL. CONTRACTOR TO VERIFY THAT ALL BARRIERS IN THE PATH OF TRAVEL HAVE BEEN REMOVED, PER CALIFORNIA BUILDING CODE SECTION 1133B.

SITE NOTES

1) FOR TYPICAL SYMBOLS AND ABBREVIATIONS, SEE SHEET G002.
2) PROTECT AND SAFEGUARD FROM DAMAGES ALL EXISTING CONSTRUCTION AND FINISHES TO REMAIN.
3) PROVIDE TEMPORARY 6' HIGH CHAIN LINK FENCE ENCLOSURES WITH LOCKABLE GATES AS REQUIRED FOR CONSTRUCTION ACCESS AT CONTRACTOR'S STAGING AREA AND AROUND ALL CONSTRUCTION SITES AS DICTATED BY THE PHASING SCHEDULE
4) CONTRACTOR SHALL REMOVE HARDSCAPE & LANDSCAPE, PROVIDE TRENCHING, AND RESTORE HARDSCAPE & LANDCAPE AS REQ. FOR THE INSTALLATION OR REPAIR OF NEW AND EXISTING SITE UTILITIES. **COORDINATE W/ ALL DISCIPLINES.**
WHERE REMOVAL OF CONCRETE WALKS, MOWS TRIPS, CURBS AND GUTTERS IS REQUIRED TO INSTALL UNDERGROUND UTILITIES, REMOVE THE CONCRETE WORK TO THE NEAREST EXISTING EXPANSION OR CONTROL JOINT (SAW CUT IF REQUIRED).
CURBS AND GUTTERS MAY BE REMOVED IN MINIMUM LENGTHS OF 6' IF THE DISTANCE BETWEEN EXISTING JOINTS IS 12' OR MORE. REPLACE REMOVED WORK WITH REINFORCED CONCRETE TO MATCH ADJACENT EXISTING WORK IN PROFILE, JOINT LAYOUT AND FINISH. SEE SHEET A005 FOR SIMILAR DETAILS AND REINFORCING REQUIREMENTS. REPAIR CONCRETE WORK PER DETAIL M16/A005.
5) WHERE ASPHALT PAVING IS DAMAGED BY THE EXECUTION OF THIS CONTRACT, PATCH, REPAIR & RESTRIPE TO ORIGINAL OR BETTER CONDITION. REPAIR ASPHALT PARKING LOTS, SPEED BUMPS AND PAINTED CROSSWALKS DAMAGED BY THE EXECUTION OF THIS CONTRACT TO ORIGINAL OR BETTER CONDITION. REPAINT CROSSWALKS AND SPEED BUMP STRIPING THEIR FULL LENGTHS ACCROSS ROADWAYS.
6) WHERE (E) LAWNS ARE DAMAGED BY THE EXECUTION OF THIS CONTRACT, CLEAN, FILL, COMPACT, AND AND RE-SEED AREA TO MATCH ADJACENT UNDAMAGED AREA. RE-SEED WITH PERENNIAL RYE GRASS
7) CONTRACTOR SHALL MAINTAIN EXISTING PLANTING WITHIN THE JOB SITE FENCE ENCLOSURE DURING DEMOLITION AND CONSTRUCTION PHASES. EXISTING IRRIGATION SYSTEMS SHALL EITHER REMAIN OPERATIONAL FOR CONTRACTOR'S USE OR CONTRACTOR SHALL HAND WATER EXISTING PLANT MATERIALS AT LEAST ONCE A WEEK.
8) REPAIR EXISTING IRRIGATION SYSTEMS DAMAGED DURING THE EXECUTION OF THIS CONTRACT. REPLACE PLANT MATERIALS DAMAGED DURING THE CONSTRUCTION PROCESS WITH THE SAME SPECIES OF EQUAL OR GREATER SIZE. REPLACE REMOVED TREES WITH 24" BOX SPECIMEN SPECIE AS DIRECTED BY DISTRICT. COORDINATE THE REMOVAL, RELOCATION OR MODIFICATION OF EXISTING IRRIGATION LINES WITH THE DISTRICT PRIOR TO ANY TRENCHING, CLEARING OR GRUBBING, OR OTHER SITE EXCAVATIONS REQUIRED FOR NEW CONSTRUCTION.
9) REBUILD PLANTER WALLS DAMAGED BY CONSTRUCTION TO MATCH (E). SEE DETAILS ON SHEET A0001.
10) WHERE STAIRS OCCUR, PROVIDE HANDRAIL EXTENSIONS AT EACH HANDRAIL PER DETAIL A12/A006 & DISABLED ACCESS DIRECTIONAL SIGNAGE PER DETAIL R4/A005. PAINT ALL TREADS YELLOW COLOR PER R4/A006.

KEY PLAN

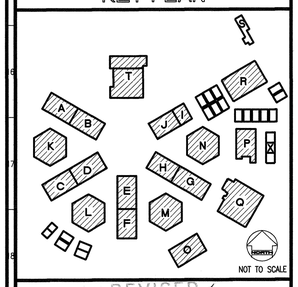

REVISED
MAY 12 2004

IDENTIFICATION STAMP
DIV. OF THE STATE ARCHITECT
OFFICE OF REGULATION SERVICES
FILE NO. 19-H51
APPL. NO. 03-106434
AC. FLS. SS.
DATE

Dougherty + Dougherty
Architecture • Planning • Interior Design
3194-D Airport Loop Drive
Costa Mesa, CA 92626
(714) 427-0277

Copyright © 2002 Dougherty + Dougherty

Consultant Seal

Architect Seal

LA MIRADA HIGH SCHOOL
MODERNIZATION
NORWALK - LA MIRADA UNIFIED SCHOOL DISTRICT
13520 ADELFA DRIVE LA MIRADA, CA 90638

ENLARGED SITE PLAN

Date:	04-01-04
Job:	20237.50
Scale:	1"=30'-0"
Drawn:	
Revisions:	
1	12-01-03

A002

REFER TO SPECIFICATION SECTION 09614 FOR INSTALLATION REQUIREMENT

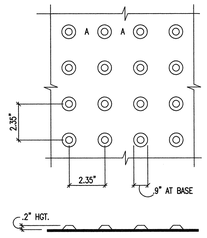

TYPICAL SECTION A-A

025-27.dwg

V4 | DETECTABLE WARNINGS | R4 | N.T.S.

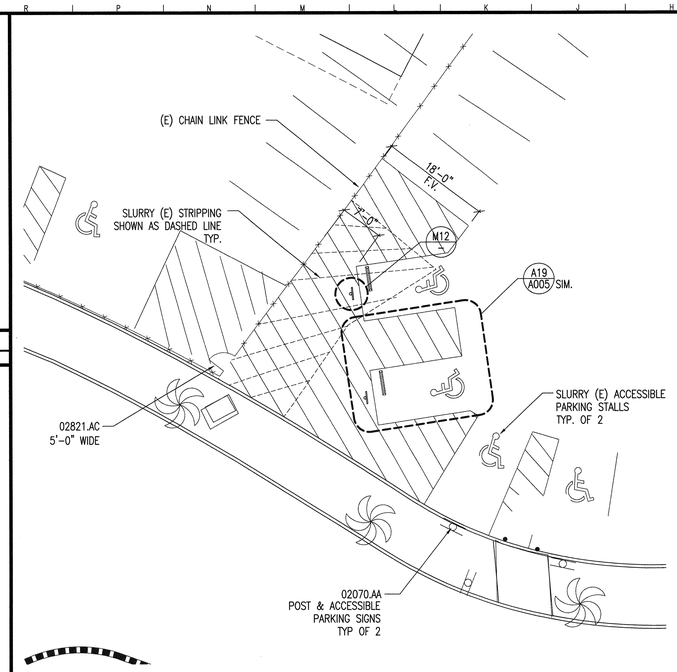

V8 | ENLARGED SITE PLAN | R8 | H8
ACCESSIBLE PARKING | 1"=10'-0"

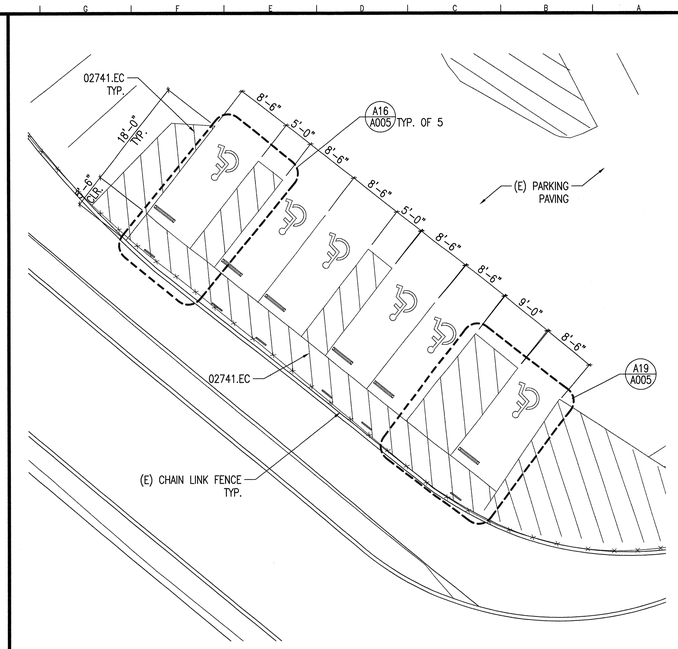

ENLARGED SITE PLAN | A8
ACCESSIBLE PARKING | 1"=10'-0"

V12 | R12

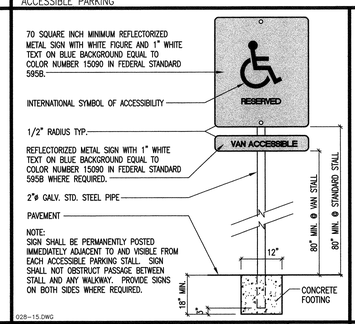

ACCESSIBLE PARKING STALL SIGN | M12
1-1/2"=1'-0"

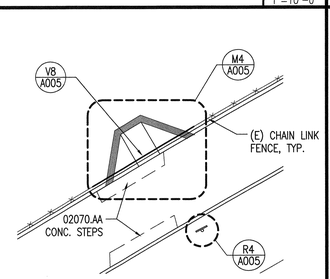

ENLARGED SITE PLAN | H12
ACCESSIBLE CURB CUT | 1"=10'-0"

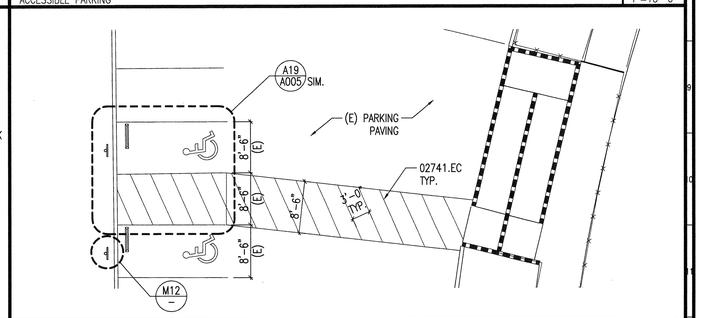

ENLARGED SITE PLAN | A12
ACCESSIBLE PARKING | 1"=10'-0"

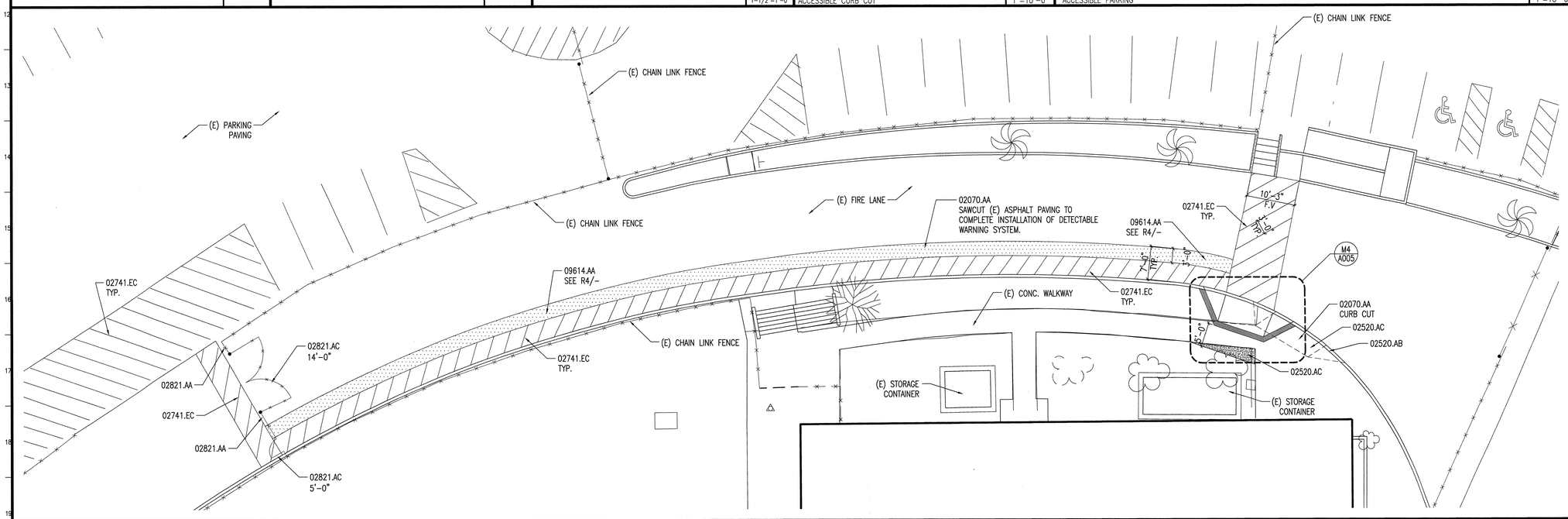

ENLARGED SITE PLAN | A19
PATH OF TRAVEL | 1"=10'-0"

KEYNOTES

KEYNOTES REFERENCE SPECIFICATION SECTIONS BY MEANS OF A FIVE-DIGIT NUMBER IDENTIFYING THE SECTION WHERE A MORE COMPLETE DESCRIPTION OF THE ITEM INDICATED WILL BE FOUND. THE LETTER SUFFIX OF THE KEYNOTE DOES NOT RELATE TO ANY CORRESPONDING REFERENCE LETTER IN THE SPECIFICATION. KEYNOTES DO NOT DESCRIBE CONSTRUCTION MEANS, METHODS, TECHNIQUES, SEQUENCES, OR PROCEDURES. NO TRADE JURISDICTIONAL ALLOCATION OF THIS WORK IS INTENDED BY THE SUBDIVISION OF THESE KEYNOTES. IT SHALL BE THE CONTRACTOR'S SOLE RESPONSIBILITY TO SUBDIVIDE THE WORK IN THE MANNER HE DEEMS NECESSARY.

DIVISION 2 – SITEWORK

02070.AA	REMOVE EXISTING ITEM
02520.AB	6" CONCRETE CURB – FINISH TO MATCH EXISTING
02520.AC	CONCRETE PAVING – NON-SLIP BROOM FINISH TO MATCH EXISTING
02741.EC	4" WIDE BLUE PAVEMENT PAINT STRIPE
02821.AA	6'-0" HIGH CHAIN-LINK FENCE
02821.AC	6'-0" HIGH CHAIN-LINK GATE – WIDTH NOTED

DIVISION 9 – FINISHES

09614.AA	DETECTABLE WARNING SYSTEM

KEY PLAN

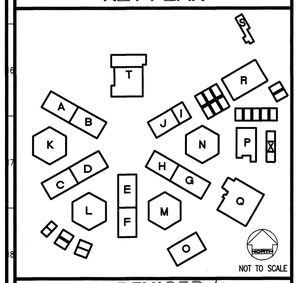

REVISED
IDENTIFICATION STAMP
DIV. OF THE STATE ARCHITECT
OFFICE OF REGULATION SERVICES
FILE NO. 19-H51
APPL. NO. 03-106434
AC. FLS. SS.
DATE
MAY 12 2004

Dougherty ■ Dougherty
Architecture • Planning • Interior Design
3194-D Airport Loop Drive
Costa Mesa, CA 92626
(714) 427-0277

Copyright © 2002 Dougherty + Dougherty

LICENSED ARCHITECT
REGISTERED PROFESSIONAL ENGINEER
No. C-28824
STATE OF CALIFORNIA

Architect Seal

Consultant Seal

LA MIRADA HIGH SCHOOL MODERNIZATION
NORWALK - LA MIRADA UNIFIED SCHOOL DISTRICT
13520 ADELFA DRIVE LA MIRADA, CA 90638

ENLARGED SITE PLANS & DETAILS

Date:	04-01-04
Job:	20237.50
Scale:	AS NOTED
Drawn:	
Revisions:	
1	12-01-03

A002.1

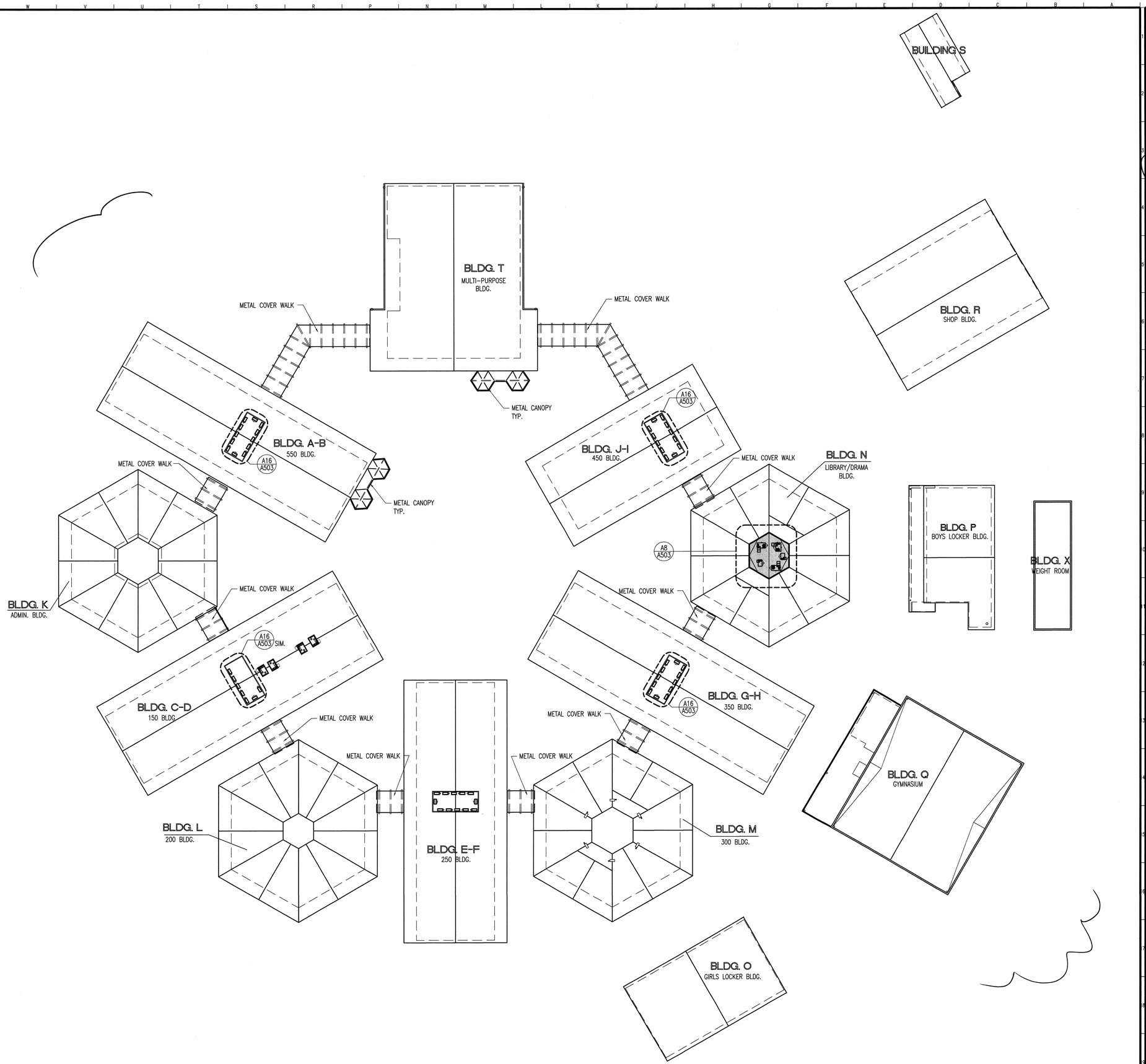

ENLARGED PLAN

A19

1" = 30'-0"

KEYNOTES

KEYNOTES REFERENCE SPECIFICATION SECTIONS BY MEANS OF A FIVE-DIGIT NUMBER IDENTIFYING THE SECTION WHERE A MORE COMPLETE DESCRIPTION OF THE ITEM INDICATED WILL BE FOUND. THE LETTER SUFFIX OF THE KEYNOTE DOES NOT RELATE TO ANY CORRESPONDING REFERENCE LETTER IN THE SPECIFICATION. KEYNOTES DO NOT DESCRIBE CONSTRUCTION MEANS, METHODS, TECHNIQUES, SEQUENCES, OR PROCEDURES. NO TRADE JURISDICTIONAL ALLOCATION OF THIS WORK IS INTENDED BY THE SUBDIVISION OF THESE KEYNOTES. IT SHALL BE THE CONTRACTOR'S SOLE RESPONSIBILITY TO SUBDIVIDE THE WORK IN THE MANNER HE DEEMS NECESSARY.

ROOF NOTES

1) PROVIDE (N) METAL EDGE FLASING, EXPANSION FLASHING, PIPE AND CONDUIT PENETRATION FLASHING, MECHANICAL UNIT CURB FLASHING, RELIEF AIR VENTS AND FLASHING.
2) REFER TO MECHANICAL, PLUMBING AND ELECTRICAL DRAWINGS FOR ADDITIONAL INFORMATION.
3) PAINT METAL COVER WALKWAYS & CANOPIES. PAINT ALL EXPOSED SURFACES INCLUDING BUT NOT LIMITED TO: STEEL PIPE COLUMNS, BEAMS, UNDERSIDE OF METAL ROOFS, METAL FLASHINGS FACIAS...
REFER TO SEC. # 0990

ROOF LEGEND

SBS MODIFIED BITUMEN ROOFING
SEE SPECIFICATIONS SECTION 07560

KEY PLAN

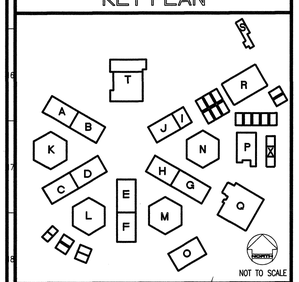

REVISED MAY 12 2004

IDENTIFICATION STAMP
DIV. OF THE STATE ARCHITECT
OFFICE OF REGULATION SERVICES
FILE NO. 19-H51
APPL. NO. 03-106434
AC. FLS. SS.
DATE

Dougherty + Dougherty
Architecture • Planning • Interior Design
3194-D Airport Loop Drive
Costa Mesa, CA 92626
(714) 427-0277

Copyright © 2002 Dougherty + Dougherty

Architect Seal

Consultant Seal

LA MIRADA HIGH SCHOOL
MODERNIZATION
NORWALK - LA MIRADA UNIFIED SCHOOL DISTRICT
13520 ADELFA DRIVE LA MIRADA, CA 90638

ROOF PLAN
CANOPY,
& COVER WALK

Date:	04-01-04
Job:	20237.50
Scale:	1"=30'-0"
Drawn:	
Revisions:	

A003

Y:\2003 Projects\20237.5 LMHS\20237A003.dwg, 05/04/2004 05:23:15 PM

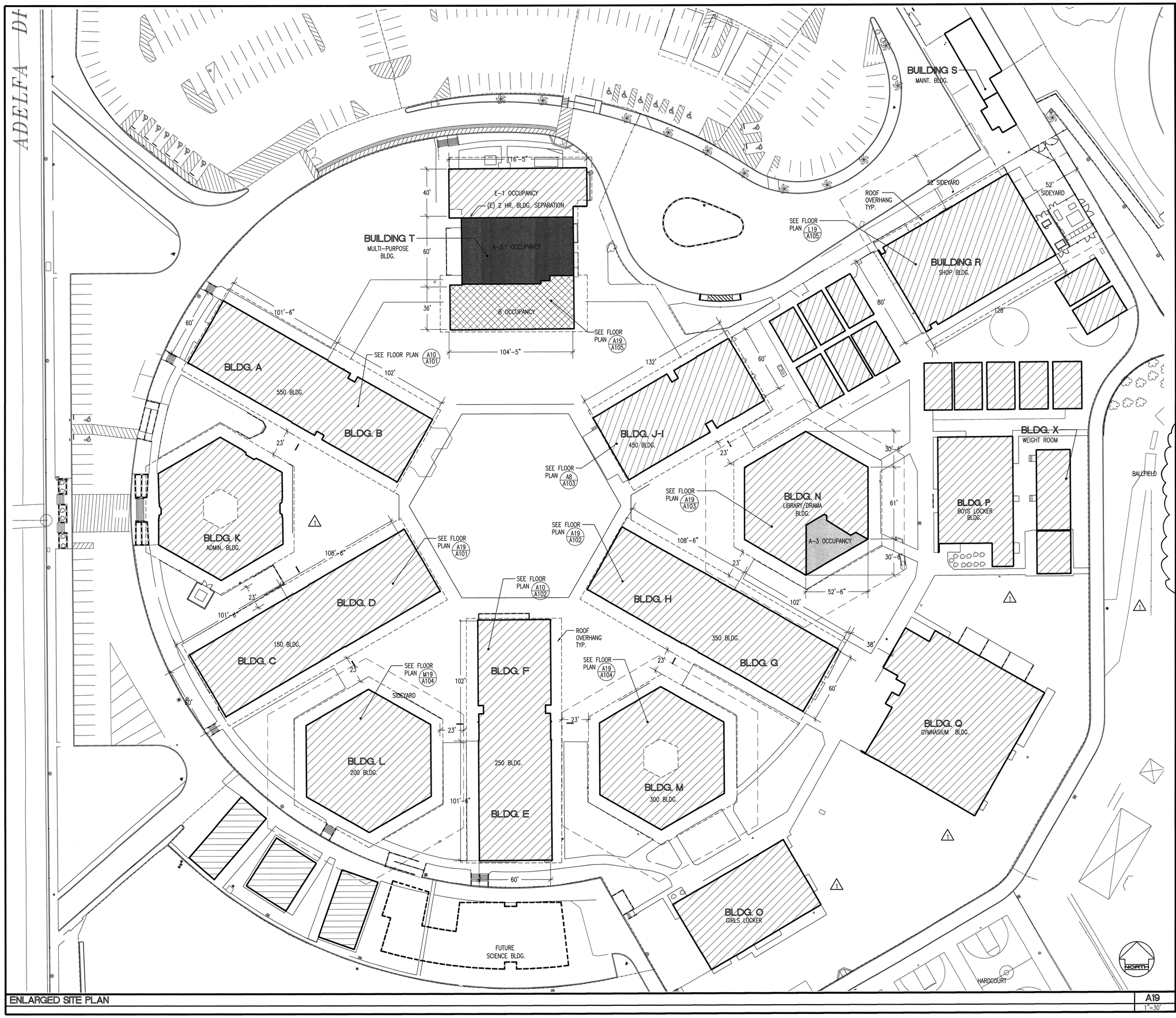

ENLARGED SITE PLAN

A19

1"=30'

CODE ANALYSIS

BUILDING A-B* [C-D, E-F, G-H, SIM.]

CLASSROOM BUILDINGS

OCCUPANCY:	E-1
CONSTRUCTION TYPE:	TYPE V-N
ALLOWABLE FLOOR AREA (TABLE 5-B):	9,100 S.F.
PER CBC SECTION 305.2.1: 50% ALLOWABLE FLOOR AREA INCREASE FOR 50% REDUCTION IN TRAVEL DISTANCE	
THUS, ALLOWABLE FLOOR AREA INCREASED	13,650 S.F.
ACTUAL BUILDING FLOOR AREA	
BUILDING: A – B	13,170 S.F.
BUILDING: C – D	12,600 S.F.
BUILDING: E – F	12,210 S.F.
BUILDING: G – H	12,630 S.F.

BUILDING I – J (CLASSROOM BUILDINGS)

OCCUPANCY:	E-1
CONSTRUCTION TYPE:	TYPE V-N
ALLOWABLE BUILDING AREA (TABLE 5-B):	9,100 S.F.
ACTUAL BUILDING FLOOR AREA:	7,920 S.F.

BUILDING L [M SIM.] (CLASSROOM BUILDINGS)

OCCUPANCY:	E-1
CONSTRUCTION TYPE:	TYPE V-N
BLDG. L ACTUAL BUILDING AREA:	9,560 S.F.
ALLOWABLE BUILDING AREA (TABLE 5-B):	9,100 S.F.
SIDEYARD INCREASE:	
23' SIDEYARD, ALL SIDES	
[(23' – 20') x 5%] x 9,100 S.F. =	1,356 S.F.
TOTAL ALLOWABLE BUILDING AREA:	10,465 S.F. ✓

BUILDING N (LIBRARY AND THEATER BUILDING)

OCCUPANCY:	E-1, A-3 MIXED
CONSTRUCTION TYPE:	TYPE V-N
ALLOWABLE AREA W/ SIDEYARD (E OCC.)	
[(23'-20') x 5%] x 9,100 SF =	10,456 SF
ALLOWABLE AREA W/ SIDEYARD (A-3 OCC.)	
[(23'-20') x 5%] x 6,000 SF =	6,900 SF
ACTUAL AREA (E OCC.)	8,270 SF
ACTUAL AREA (A-3 OCC.)	1,342 SF
MIXED USE OCC. RATIO	
(E) $\frac{8,270}{10,456}$=79% + (A-3) $\frac{1,342}{6,900}$=19%	
79% + 19% = 98% < 1✓	

BUILDING R (CLASSROOM BUILDINGS)

OCCUPANCY:	E-1
CONSTRUCTION TYPE:	TYPE V-N
BLDG. R ACTUAL BUILDING AREA:	10,240 S.F.
ALLOWABLE BUILDING AREA (TABLE 5-B):	9,100 S.F.
SIDEYARD INCREASE:	
52' SIDEYARD, TWO SIDES	
[(52' – 20') x 1.25%] x 9,100 S.F. =	3,640 S.F.
TOTAL ALLOWABLE BUILDING AREA:	12,740 S.F. ✓

BUILDING T

BUILDING W/ 2 HR. AREA SEPARATION WALL PER CBC 504.6 THEREFORE WILL BE CONSIDERED AS 2 SEPARATE BUILDINGS

NORTH BUILDING (N OF 2-HR SEPARATION):

OCCUPANCY:	E-1
CONSTRUCTION TYPE:	TYPE V-N
ACTUAL BUILDING AREA:	4,560 S.F.
ALLOWABLE BUILDING AREA (TABLE 5-B):	9,100 S.F. ✓

SOUTH BUILDING (S OF 2-HR SEPARATION):

OCCUPANCY:	A-2.1
CONSTRUCTION TYPE:	TYPE V-1 HR.
MULTI-PURPOSE BUILDING AREA:	5,520 SF
ALLOWABLE BUILDING AREA (TABLE 5-B):	10,500 S.F.
OCCUPANCY:	B
CONSTRUCTION TYPE:	TYPE V-1 HR.
KITCHEN AREA:	4,009 SF
ALLOWABLE BUILDING AREA (TABLE 5-B):	14,000 S.F.

(A-2.1) $\frac{5,520}{10,500}$ =.53 +(B) $\frac{4,009}{14,000}$=.29

.53 + .29 = .82 < 1 ✓

BUILDING K

OCCUPANCY:	B
CONSTRUCTION TYPE:	TYPE V-N
ACTUAL BUILDING AREA:	8,165 S.F.
ALLOWABLE BUILDING AREA (TABLE 5-B):	8,000 S.F.
ALLOWABLE W/ SIDEYARDS	
[(23' – 20') x 5%] x 8,000 S.F. =	1,200 S.F.
TOTAL ALLOWABLE BUILDING INCREASED:	9,200 S.F.

BUILDING O (GIRLS LOCKER)

OCCUPANCY:	E-1
CONSTRUCTION TYPE:	TYPE V-N
ALLOWABLE BUILDING AREA (TABLE 5-B):	9,100 S.F.
ACTUAL BUILDING FLOOR AREA:	6,912 S.F.

BUILDING P (BOYS LOCKER)

OCCUPANCY:	E-1
CONSTRUCTION TYPE:	TYPE V-N
ALLOWABLE BUILDING AREA (TABLE 5-B):	9,100 S.F.
ACTUAL BUILDING FLOOR AREA:	6,120 S.F.

BUILDING Q (GYMNASIUM)

OCCUPANCY:	A-2.1
CONSTRUCTION TYPE:	TYPE V-1HR
ACTUAL BUILDING FLOOR AREA:	18,295 S.F.
ALLOWABLE W/ SIDEYARDS	
[(38' – 20') x 5%] x 10,500 S.F. =	9,450 S.F.
TOTAL ALLOWABLE BUILDING INCREASED:	19,950 S.F.

SITE LEGEND

- A-2.1 OCCUPANCY
- A-3 OCCUPANCY
- B OCCUPANCY
- E-1 OCCUPANCY

REVISED

IDENTIFICATION STAMP
DIV. OF THE STATE ARCHITECT
OFFICE OF REGULATION SERVICES
FILE NO. 19-H51
APPL. NO. 03-106434
AC. FLS. H.C. SS.
DATE

MAY 1 2 2004

Dougherty ■■ Dougherty
Architecture • Planning • Interior Design
3184-D Airport Loop Drive
Costa Mesa, CA 92626
(714) 427-0277

Copyright © 2002 Dougherty + Dougherty

Consultant Seal

LA MIRADA HIGH SCHOOL MODERNIZATION
NORWALK - LA MIRADA UNIFIED SCHOOL DISTRICT
13520 ADELFA DRIVE LA MIRADA, CA 90638

CODE ANALYSIS

Date:	04-01-04
Job:	20237.50
Scale:	AS NOTED
Drawn:	
Revisions:	
1	12-01-03

A004

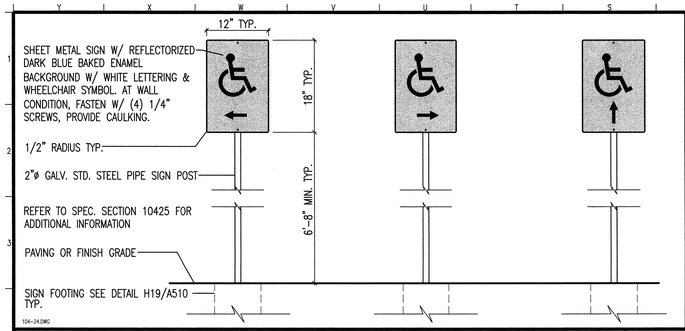

DISABLED ACCESS DIRECTIONAL SIGNAGE | R4 | N.T.S.

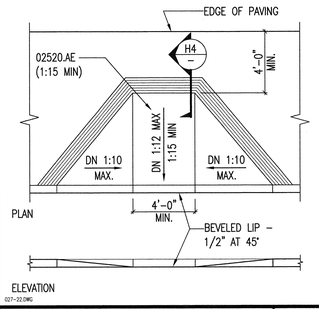

ACCESSIBLE CURB RAMP | M4 | 1/4"=1'-0"

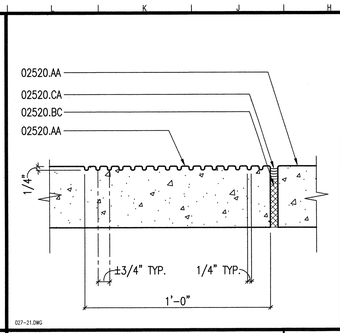

TACTILE WARNING - PAVING GROOVING | H4 | 3"=1'-0"

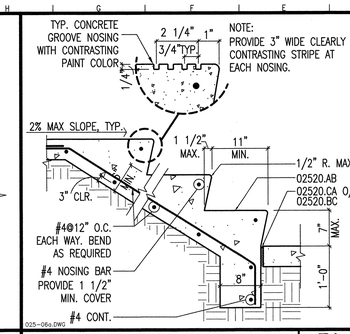

CONCRETE STAIRS ON GRADE | E4 | 1"=1'-0"

OMIT | A4

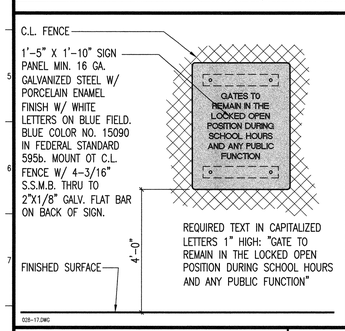

GATE SIGN AT PATH OF TRAVEL | V8 | 1-1/2"=1'-0"

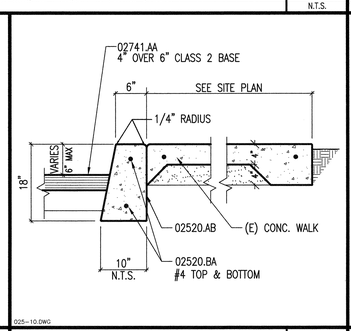

CONCRETE CURB • WALK | R8 | 1" = 1'-0"

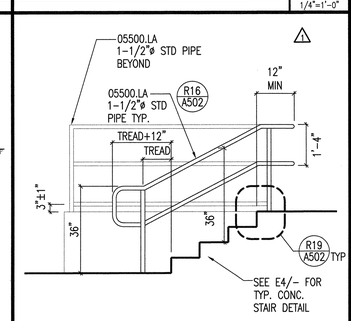

SECTION | M8 | 1/2"=1'-0"
STAIR AND HANDRAIL @ PARKING

OMIT | A8

KEYNOTES

KEYNOTES REFERENCE SPECIFICATION SECTIONS BY MEANS OF A FIVE-DIGIT NUMBER IDENTIFYING THE SECTION WHERE A MORE COMPLETE DESCRIPTION OF THE ITEM INDICATED WILL BE FOUND. THE LETTER SUFFIX OF THE KEYNOTE DOES NOT RELATE TO ANY CORRESPONDING REFERENCE LETTER IN THE SPECIFICATION. KEYNOTES DO NOT DESCRIBE CONSTRUCTION MEANS, METHODS, TECHNIQUES, SEQUENCES, OR PROCEDURES. NO TRADE JURISDICTIONAL ALLOCATION OF THIS WORK IS INTENDED BY THE SUBDIVISION OF THESE KEYNOTES. IT SHALL BE THE CONTRACTOR'S SOLE RESPONSIBILITY TO SUBDIVIDE THE WORK IN THE MANNER HE DEEMS NECESSARY.

DIVISION 2 - SITEWORK

02520.AA CONCRETE PAVING - 4" THICK WITH #3 BARS @ 24" O.C. EACH WAY, NON-SLIP BROOM FINISH
02520.AB 6" CONCRETE CURB - FINISH TO MATCH EXISTING
02520.AE CONCRETE RAMP WITH NON-SLIP HEAVY BROOM FINISH - SLOPE 1:12 MAX.
02520.AF PRECAST CONCRETE WHEEL STOP - 4'-0" LONG
02520.AG PRECAST CONCRETE WHEEL STOP - 6'-0" LONG
02520.BA REINFORCING BAR
02520.BB 3/4" DIA. GALVANIZED STEEL DOWELS - 6" FROM EACH END - 2'-6" LONG MIN.
02520.BC EXPANSION JOINT FILLER
02520.BD #3 REINFORCING BARS - CONTINUOUS - BOTH SIDES
02520.CA SEALANT
02741.AA HOT-MIXED ASPHALT PAVING

DIVISION 5 - METALS

05500.LA PIPE HANDRAIL

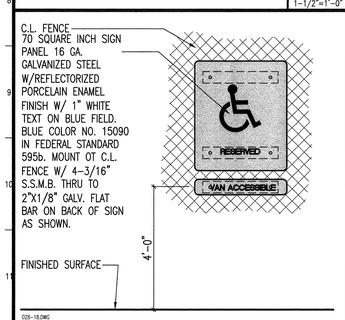

ACCESSIBLE PARKING SIGN | V12 | 1-1/2"=1'-0"

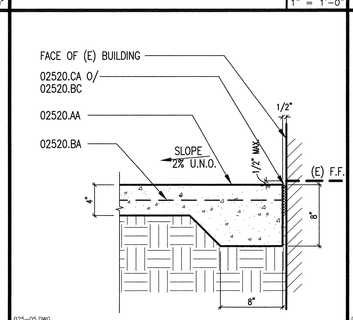

CONCRETE PAVING • BUILDING | R12 | 1-1/2"=1'-0"

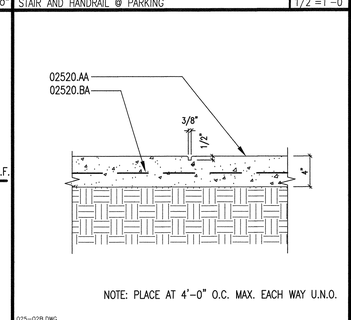

CONCRETE PAVING CONTROL JOINT | M12 | 1 1/2" = 1'-0"

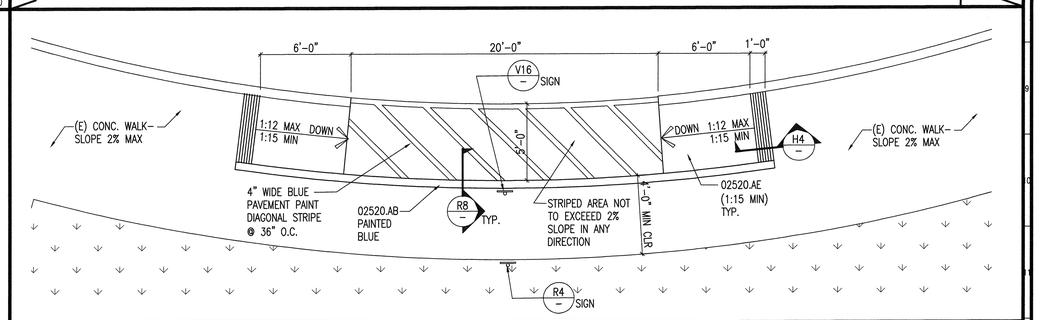

ENLARGED PLAN | A12 | 1/4"=1'-0"
ACCESSIBLE PASSENGER LOADING ZONE

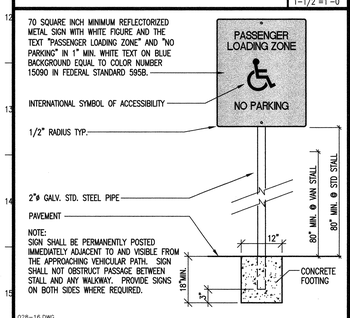

PASSENGER LOADING ZONE SIGN | V16 | 1-1/2"=1'-0"

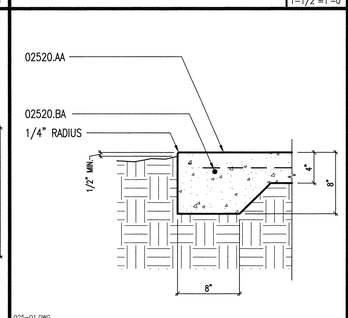

CONCRETE PAVING | R16 | 1-1/2"=1'-0"

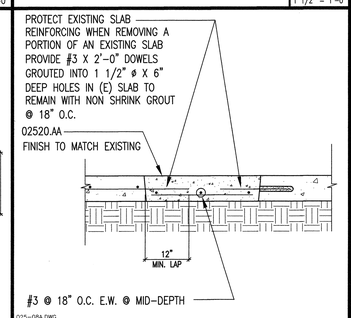

SLAB ON GRADE REPAIR TYP. | M16 | 1 1/2"=1'-0"

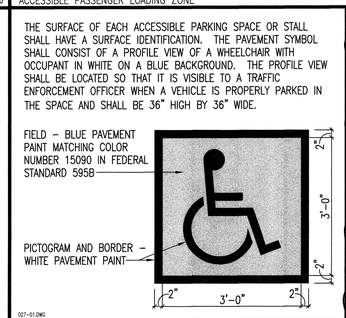

PAVEMENT SYMBOL | H16 | 3/4"=1'-0"

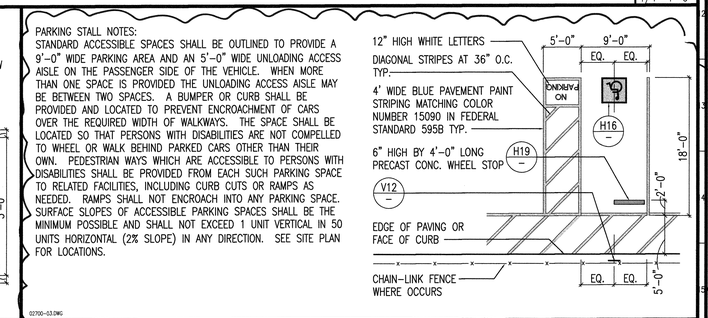

STANDARD ACCESSIBLE PARKING STALL - MINIMUM REQUIREMENTS | A16 | N.T.S.

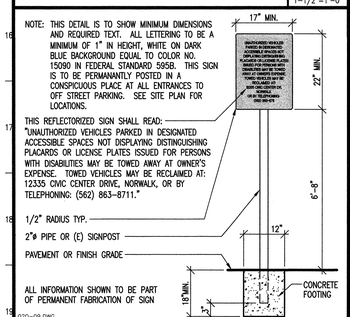

SITE ENTRANCE SIGNAGE | V19 | N.T.S.

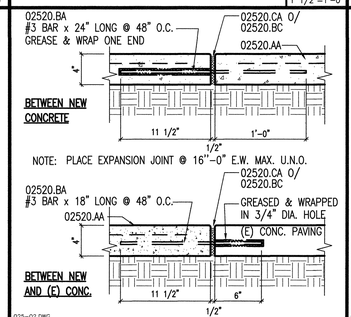

CONCRETE EXPANSION JOINT | R19 | 1 1/2" = 1'-0"

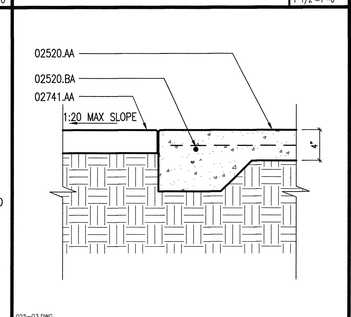

AC • CONCRETE PAVING | M19 | 1 1/2"=1'-0"

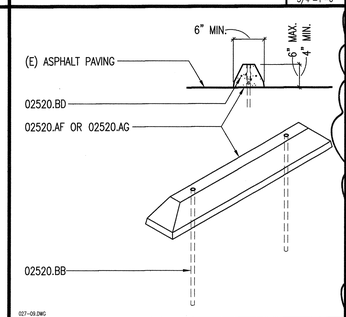

PRECAST CONCRETE WHEEL STOP | H19 | 3/4"=1'-0"

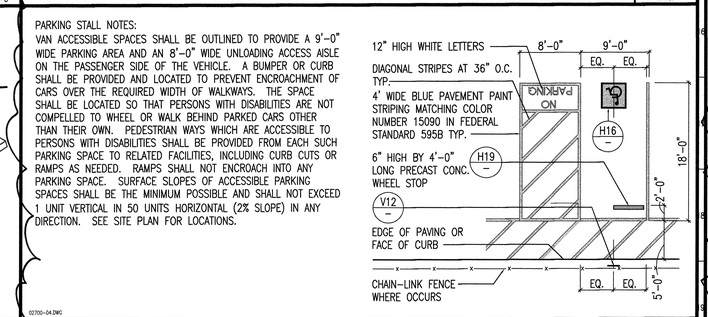

VAN ACCESSIBLE PARKING STALL - MINIMUM REQUIREMENTS | A19 | N.T.S.

Dougherty ■■ Dougherty
Architecture • Planning • Interior Design
3184-D Airport Loop Drive
Costa Mesa, CA 92626
(714) 427-0277

Copyright © 2002 Dougherty + Dougherty

Consultant Seal

Architect Seal

LA MIRADA HIGH SCHOOL
MODERNIZATION
NORWALK - LA MIRADA UNIFIED SCHOOL DISTRICT
13520 ADELFA DRIVE LA MIRADA, CA 90638

KEY PLAN

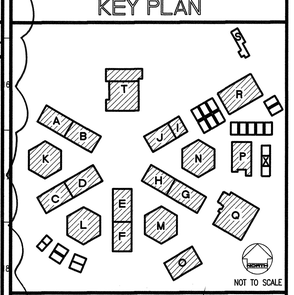

REVISED
IDENTIFICATION STAMP
DIV. OF THE STATE ARCHITECT
OFFICE OF REGULATION SERVICES
FILE NO. 19-H51
APPL. NO. 03-106434
AC. FLS. SS.
DATE
MAY 12 2004

SITE DETAILS

Date:	04-01-04
Job:	20237.50
Scale:	AS NOTED
Drawn:	
Revisions:	
1	12-01-03

A005

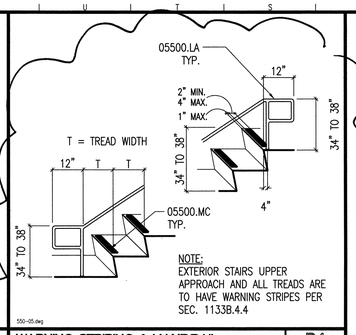

V4	WARNING STRIPING & HANDRAIL EXTERIOR STAIR	R4 N.T.S.

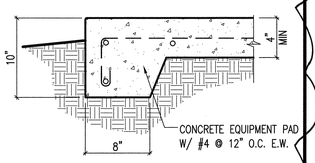

V8	CONCRETE PAD	R8 1-1/2" = 1'-0"

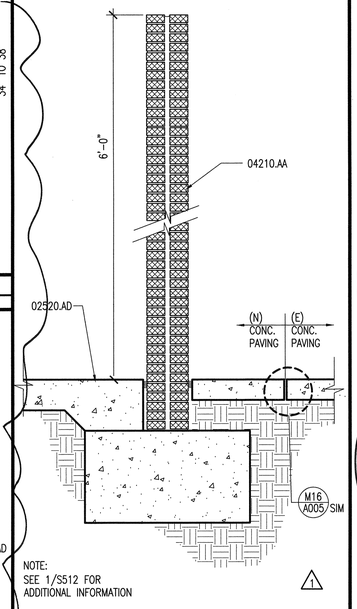

SECTION DETAIL	M8 1"=1'-0"	

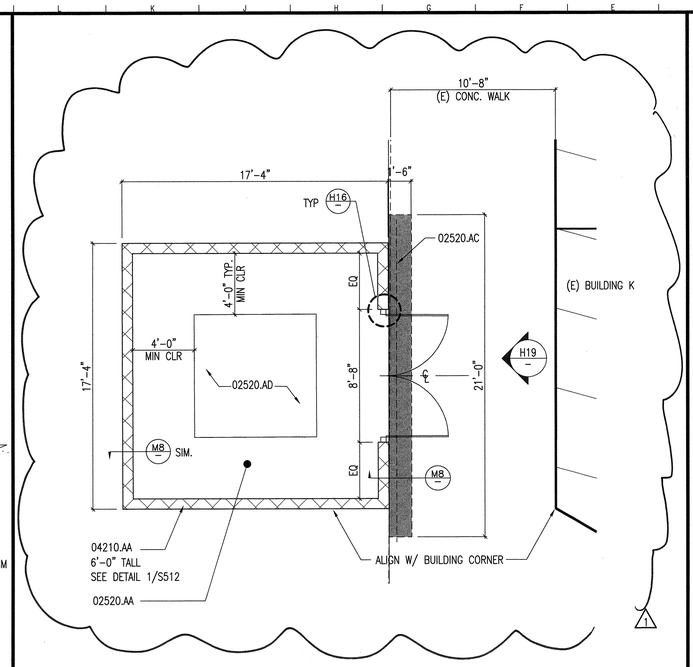

ENLARGED PLAN TRANSFORMER ENCLOSURE	E8 1/4"=1'-0"	

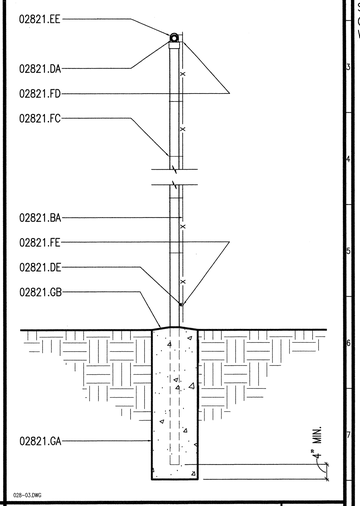

CHAIN-LINK FENCE	A8 3/4"=1'-0"	

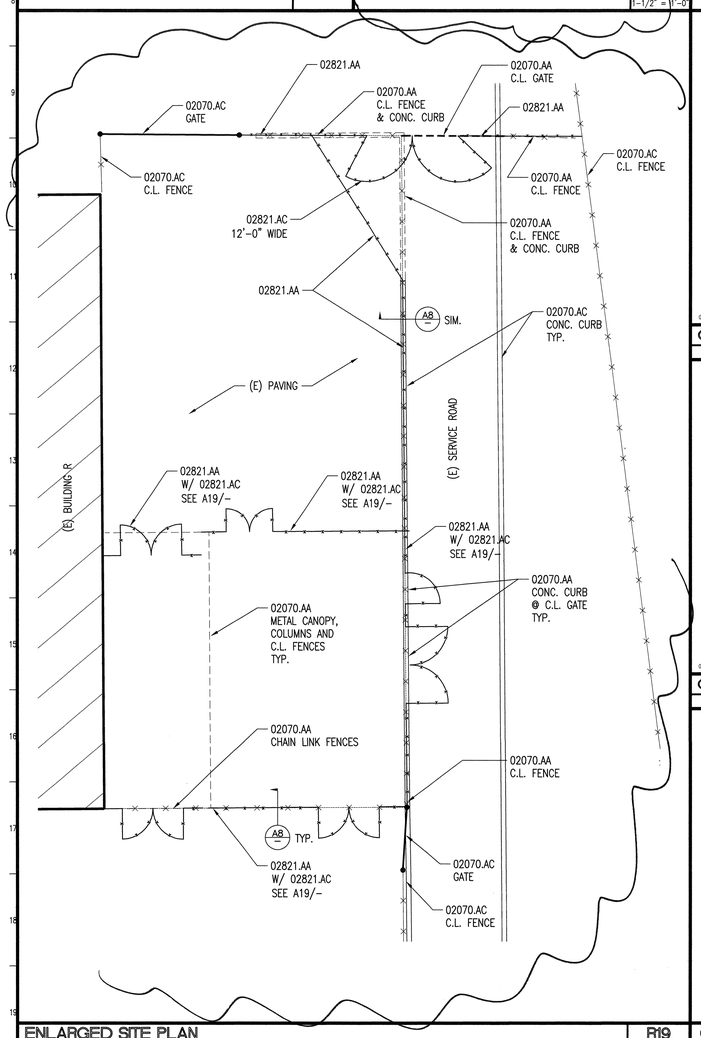

ENLARGED SITE PLAN UTILITY ENCLOSURE/CHAIN LINK FENCE	R19 1/8"=1'-0"	

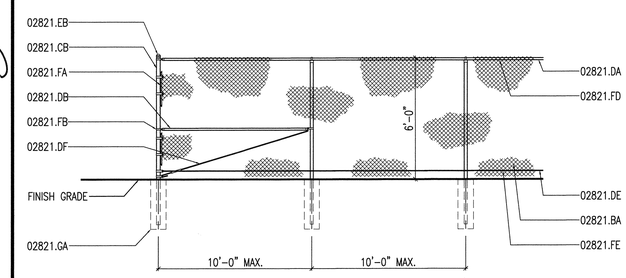

CHAIN LINK FENCE	E16 1/4"=1'-0"	

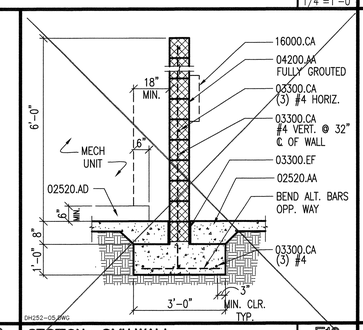

SECTION • CMU WALL	E12 1/2"=1'-0"	

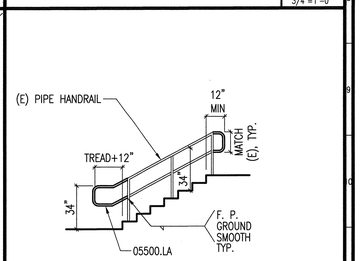

TYPICAL ELEVATION HANDRAIL EXTENSION	A12 1/4"=1'-0"	

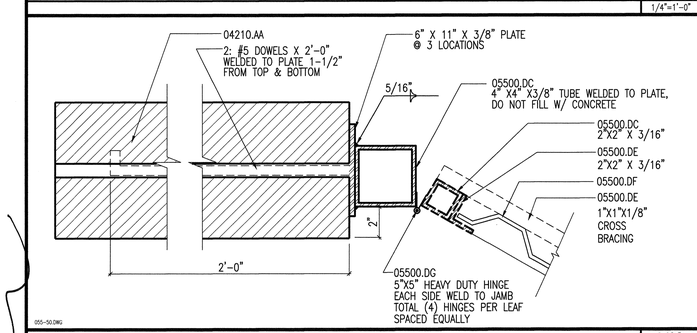

GATE DETAIL	H16 3"=1'-0"	

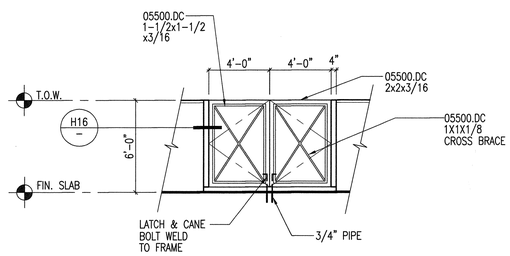

GATE ELEVATION UTILITY ENCLOSURE	H19 1/4"=1'-0"	

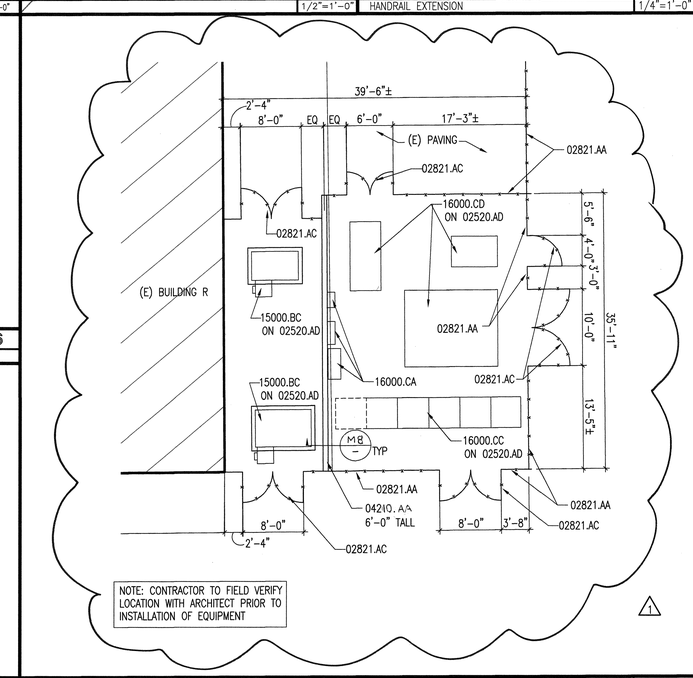

ENLARGED PLAN UTILITY ENCLOSURE	A19 1/8"=1'-0"	

KEYNOTES

KEYNOTES REFERENCE SPECIFICATION SECTIONS BY MEANS OF A FIVE-DIGIT NUMBER IDENTIFYING THE SECTION WHERE A MORE COMPLETE DESCRIPTION OF THE ITEM INDICATED WILL BE FOUND. THE LETTER SUFFIX OF THE KEYNOTE DOES NOT RELATE TO ANY CORRESPONDING REFERENCE LETTER IN THE SPECIFICATION. KEYNOTES DO NOT DESCRIBE CONSTRUCTION MEANS, METHODS, TECHNIQUES, SEQUENCES, OR PROCEDURES. NO TRADE JURISDICTIONAL ALLOCATION OF THIS WORK IS INTENDED BY THE SUBDIVISION OF THESE KEYNOTES. IT SHALL BE THE CONTRACTOR'S SOLE RESPONSIBILITY TO SUBDIVIDE THE WORK IN THE MANNER HE DEEMS NECESSARY.

DIVISION 2 – SITEWORK

02070.AA REMOVE EXISTING ITEM
02070.AC EXISTING ITEM TO REMAIN
02520.AA CONCRETE PAVING – 4" THICK WITH #3 BARS @ 24" O.C. EACH WAY, NON-SLIP BROOM FINISH
02520.AC CONCRETE PAVING – FINISH TO MATCH (E)
02520.AD CONCRETE PAD – 6" THICK W/#4 BAR @ 12" O.C. EA. WAY ⊥ @ CENTER OF SLAB
02821.AA 6'-0" HIGH CHAIN-LINK FENCE
02821.AC 6'-0" HIGH CHAIN-LINK GATE – WIDTH NOTED
02821.BA GALV. STL. CHAIN-LINK FABRIC
02821.CB GALV. STL. CORNER POST
02821.DA GALV. STL. TOP RAIL
02821.DB GALV. STL. BRACE RAIL
02821.DE GALV. STL. TENSION WIRE
02821.DF GALV. STL. TRUSS ROD W/ TURNBUCKLE
02821.EB GALV. STL. CORNER POST CAP
02821.EE GALV. STL. LINE POST LOOP CAP
02821.FA GALV. STL. TENSION BAR W/ TENSION BANDS
02821.FB GALV. STL. RAIL END W/ BRACE BAND
02821.FC GALV. STL. LINE POST TIE WIRE
02821.FD GALV. STL. RAIL TIE WIRE
02821.FE GALV. STL. HOG RING TIE WIRE
02821.GA CONCRETE FOOTING – FOUR (4) TIME POST DIA. MIN. – 3'-0" DEEP MIN.
02821.GB SLOPE TO DIRECT WATER AWAY FROM POST

DIVISION 3 – CONCRETE

03300.CA STEEL REINFORCING – SEE STRUCTURAL
03300.EF EXPANSION JOINT FILLER

DIVISION 4 – MASONRY

04200.AA CONCRETE MASONRY UNIT
04200.AB CONCRETE MASONRY UNIT WALL
04210.AA BRICK MASONRY WALL

DIVISION 5 – METALS

05500.DC TUBE STEEL
05500.DE STEEL ANGLE SUPPORT
05500.DF CORRUGATED METAL PANEL
05500.DG HEAVY DUTY STEEL HINGE
05500.LA PIPE HANDRAIL
05500.MC PAINT STAIR NOSING W/ CONTRASTING COLOR

DIVISION 15 – MECHANICAL

15000.BC MECH. UNIT – SEE MECH. DWGS

DIVISION 16 – ELECTRICAL

16000.CA ELECTRICAL PANEL – SEE ELECTRICAL
16000.CC SWITCHGEAR – SEE ELECTRICAL
16000.CD ELECTRICAL EQUIPMENT – SEE ELECTRICAL

KEY PLAN

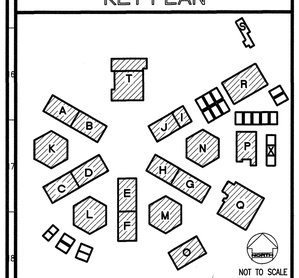

REVISED MAY 1 2 2004

IDENTIFICATION STAMP
DIV. OF THE STATE ARCHITECT
OFFICE OF REGULATION SERVICES
FILE NO. 19-H51
APPL. NO. 03-106434
AC FLS NC SS
DATE

Dougherty + Dougherty
Architecture • Planning • Interior Design
2194 D Airport Loop Drive
Costa Mesa, CA 92626
(714) 427-0277

Copyright © 2002 Dougherty + Dougherty

Architect Seal

Consultant Seal

LA MIRADA HIGH SCHOOL
MODERNIZATION
NORWALK - LA MIRADA UNIFIED SCHOOL DISTRICT
13520 ADELFA DRIVE LA MIRADA, CA 90638

SITE DETAILS

Date:	04-01-04
Job:	20237.50
Scale:	AS NOTED
Drawn:	
Revisions:	
1	12-01-03

A006

ROOM FINISH SCHEDULE

ROOM NO.	ROOM NAME	FLOOR	BASE	WALLS NORTH	WALLS EAST	WALLS SOUTH	WALLS WEST	CLG. TYPE	CLG. HT.	REMARKS
CLASSROOM BUILDING G-H										
360	CLASSROOM	F1	B1	W6/W7	W6/W7	W6	W6/W7	C7	(E)	–
361	CLASSROOM	F1	B1	W6	W6/W7	W6/W7	W6/W7	C7	(E)	–
362	WORKROOM	F1	B1	W2	W2	W2	W2	C7	(E)	–
363	OFFICE	F1	B1	W2	W2	W2	W2	C7	(E)	–
364	CLASSROOM	F1	B1	W3/W6/W7	W6/W7	W6	W6/W7	C7	(E)	–
365	CLASSROOM	F1	B1	W6	W6/W7	W6/W7	W6/W7	C7	(E)	–
366	TRANSFORMER	F3	B3	W9	W9	W9	W9	C5	(E)	
367	COUNSELING	F1	B1	W4	W4	W4	W4	C3	(E)	REMOVE (E) CONC. PADS. GRIND FLOOR. PREPARE FOR (N) FNSH.
368	ELECTRICAL	F3	B3	W4	W4	W4	W4	C4	(E)	REMOVE (E) CONC. PADS. GRIND FLOOR.
369	CERAMIC STORAGE	F3	B3	W2	W2	W2	W2	C2	(E)	
370	CLASSROOM	F1	B1	W6/W7	W6/W7	W6	W6/W7	C7	(E)	–
371	CLASSROOM	F1	B1	W6	W6/W7	W6/W7	W6/W7	C7	(E)	–
372	CLASSROOM	F1	B1	W6/W7	W6/W7	W6	W6/W7	C7	(E)	–
373	CLASSROOM	F1	B1	W6	W6/W7	W6/W7	W6/W7	C7	(E)	–
374	CLASSROOM	F1	B1	W6/W7	W3/W6/W7	W6	W6/W7	C7	(E)	–
375	CLASSROOM	F1	B1	W6	W4/W6/W7	W6/W7	W6/W7	C7	(E)	–
376	COMPUTER ROOM	F1	B1	W4	W2	W4	W2	C7	(E)	
~~377~~	~~OFFICE~~	~~F1~~	~~B1~~	~~W4~~	~~W4~~	~~W2~~	~~W2~~	~~C7~~	~~(E)~~	
378	CUSTODIAN	F3	B3	W2	W2	W2	W2	C2	(E)	
380	TESTING CENTER	F1	B1	W2	W2	W2	W2/W4	C7	(E)	
381	STORAGE	F1	B1	W4	W4	W4	W4	C4	(E)	REMOVE (E) CONC. PADS. GRIND FLOOR. PREPARE FOR (N) FNSH.
CLASSROOM BUILDING I-J										
460	CLASSROOM	F1	B1	W6/W7	W6/W7	W6	W6/W7	C7	(E)	–
461	CLASSROOM	F1	B1	W6	W6/W7	W6/W7	W6/W7	C7	(E)	–
462	ELECTRICAL	F3	B3	W4	W4	W4	W4	C4	(E)	REMOVE (E) CONC. PADS. GRIND FLOOR.
463	WORKROOM	F1	B1	W6/W7	W6/W7	W6/W7	W6/W7	C7	(E)	
464	CLASSROOM	F1	B1	W6/W7	W6/W7	W6	W6/W7	C7	(E)	–
465	CLASSROOM	F1	B1	W6	W6/W7	W6/W7	W6/W7	C7	(E)	–
466	STORAGE	F1	B1	W4	W4	W4	W4	C4	(E)	REMOVE (E) CONC. PADS. GRIND FLOOR. PREPARE FOR (N) FNSH.
467	TEXTBOOK STORAGE	F1	B1	W2	W2	W2	W2	C7	(E)	
470	CLASSROOM	F1	B1	W6/W7	W6/W7	W6	W6/W7	C7	(E)	–
471	CLASSROOM	F1	B1	W6	W6/W7	W6/W7	W6/W7	C7	(E)	–
472	MEN	F2	B2	W4/W8	W4/W8	W4/W8	W4/W8	C4	(E)	
473	BOYS	F2	B2	W4/W8	W4/W8	W4/W8	W4/W8	C4	(E)	
474	GIRLS	F2	B2	W4/W8	W4/W8	W4/W8	W4/W8	C4	(E)	
475	WOMEN	F2	B2	W4/W8	W4/W8	W4/W8	W4/W8	C4	(E)	
CLASSROOM BUILDING L										
210	BIOLOGY CLASSROOM	F1	B1	W2/W6	W2/W6	W2/W6	W2/W6	C1/C4	VARIES	SOFFIT @ 9'-8"
212	BIOLOGY CLASSROOM	F1	B1	W2/W6	W2/W6	W2/W6	W2/W6	C1/C4	VARIES	SOFFIT @ 9'-8"
213	WORKROOM	F1	B1	W2	W2	W2	W2	C1	9'-8"	
214	EARTH SCIENCE CLASSROOM	F1	B1	W2/W6	W2/W6	W2/W6	W2/W6	C1/C4	VARIES	SOFFIT @ 9'-8"
215	CUSTODIAN	F3	B3	W2	W2	W2	W2	C2	(E)	
216	EARTH SCIENCE CLASSROOM	F1	B1	W2/W6	W2/W6	W2/W6	W2/W6	C1/C4	VARIES	SOFFIT @ 9'-8"
218	BIOLOGY CLASSROOM	F1	B1	W2/W6	W2/W6	W2/W6	W2/W6	C1/C4	VARIES	SOFFIT @ 9'-8"
220	CHEMISTRY CLASSROOM	F1	B1	W2/W6	W2/W6	W2/W6	W2/W6	C1/C4	VARIES	SOFFIT @ 9'-8"
CLASSROOM BUILDING M										
310	ART STUDIO	F1	B1	W2/W6	W2/W6	W2/W6	W2/W6	C1/C4	VARIES	SOFFIT @ 9'-8"
310A	SUPPLY	F1	B1	W2	W2	W2	W2	C2	(E)	
311	CUSTODIAN	F3	B3	W2	W2	W2	W2	C2	(E)	
312	CLASSROOM	F1	B1	W2/W6	W2/W6	W2/W6	W2/W6	C1/C4	VARIES	SOFFIT @ 9'-8"
313	STORAGE	F1	B1	W2	W2	W2	W2	C2	(E)	
314	CLASSROOM	F1	B1	W2/W6	W2/W6	W2/W6	W2/W6	C1/C4	VARIES	SOFFIT @ 9'-8"
316	LIFE SKILLS	F1	B1	W2/W6	W2/W6	W2/W6	W2/W6	C1/C4	VARIES	SOFFIT @ 9'-8"
316A	STORAGE	F1	B1	W2	W2	W2	W2	C2	(E)	
318	ART STUDIO	F1	B1	W2/W6	W2/W6	W4	W2/W6	C1/C4	VARIES	SOFFIT @ 9'-8"
318A	SUPPLY	F1	B1	W4	W2	W2	W2	C2	(E)	
320	CERAMICS	F3	B3	W2	W2	W2	W2	C1/C4	VARIES	SOFFIT @ 9'-8"
321	GLAZING ROOM	F3	B3	W2	W2	W2	W2	C2	(E)	
322	KILN ROOM	F3	B3	W2	W2	W2	W2	C2	(E)	

ROOM FINISH SCHEDULE

ROOM NO.	ROOM NAME	FLOOR	BASE	WALLS NORTH	WALLS EAST	WALLS SOUTH	WALLS WEST	CLG. TYPE	CLG. HT.	REMARKS
CLASSROOM BUILDING A-B										
560	CLASSROOM	F1	B1	W6	W6/W7	W6/W7	W6/W7	C7	(E)	–
561	CLASSROOM	F1	B1	W6/W7	W6/W7	W6	W6/W7	C7	(E)	–
562	CLASSROOM	F1	B1	W6	W6/W7	W6/W7	W6/W7	C7	(E)	–
563	CLASSROOM	F1	B1	W6/W7	W6/W7	W6	W6/W7	C7	(E)	–
564	SNACK BAR	F1	B1	W2	W2	W2	W2	C4	(E)	
565	SNACK BAR	F1	B1	W2	W2	W2	W2	C4	(E)	
566	ELECTRICAL	F3	B1	W2	W2	W2	W2	C2	(E)	REMOVE (E) CONC. PADS. GRIND FLOOR.
567	CAREER CENTER	F1	B1	W2/W4	W2/W4	W4	W2	C7	(E)	
570	CLASSROOM	F1	B1	W6	W6/W7	W6/W7	W6/W7	C7	(E)	–
571	CLASSROOM	F1	B1	W6/W7	W6/W7	W6	W6/W7	C7	(E)	–
572	CLASSROOM	F1	B1	W6	W6/W7	W6/W7	W6/W7	C7	(E)	–
573	CLASSROOM	F1	B1	W6/W7	W6/W7	W6	W3/W6/W7	C7	(E)	–
574	CLASSROOM	F1	B1	W6	W4/W7	W6/W7	W6/W7	C7	(E)	–
575	CLASSROOM	F1	B1	W6/W7	W3/W6/W7	W6	W6/W7	C7	(E)	–
576	WORKROOM	F1	B1	W2	W2	W2	W2	C7	(E)	
577	CLASSROOM/OFFICE	F1	B1	W2	W2	W2	W2/W6	C7	(E)	
578	STORAGE	F1	B1	W2	W2	W2	W2	C4	(E)	REMOVE (E) CONC. PADS. GRIND FLOOR. PREPARE FOR (N) FNSH.
579	CUSTODIAN	F3	B3	W2	W2	W2	W2	C2	(E)	
580	FACULTY WORKROOM	F1	B1	W4	W2/W4	W2/W4	W2	C7	(E)	
581	MEN	F2	B2	W4/W8	W4/W8	W4/W8	W4/W8	C4	(E)	
582	GIRLS	F2	B2	W4/W8	W4/W8	W4/W8	W4/W8	C4	(E)	
583	BOYS	F2	B2	W4/W8	W4/W8	W4/W8	W4/W8	C4	(E)	
584	WOMEN	F2	B2	W4/W8	W4/W8	W4/W8	W4/W8	C4	(E)	
CLASSROOM BUILDING C-D										
160	COMPUTER ROOM	F1	B1	W6	W6/W7	W4/W6	W4/W6/W7	C7	(E)	–
161	COMPUTER ROOM	F1	B1	W4/W6	W6/W7	W6	W6/W7	C7	(E)	–
162	COMPUTER ROOM	F1	B1	W3/W6	W4/W7	W3/W6/W7	W3/W6/W7	C7	(E)	–
163	COMPUTER ROOM	F1	B1	W3/W6/W7	W4/W7	W3/W6	W3/W6/W7	C7	(E)	–
164	TRANSFORMER	F3	B3	W9	W9	W9	W9	C5	(E)	
165	CLASSROOM	F1	B1	W2/W7	W2/W4	W2/W7	W2/W7	C3	10'-0"	
167	COMMUNICATION	F1	B1	W2	W2	W2	W2	C4	(E)	
168	COMMUNICATION	F1	B1	W4	W4	W4	W4	C4	(E)	REMOVE (E) CONC. PADS. GRIND FLOOR. PREPARE FOR (N) FNSH.
170	CLASSROOM	F1	B1	W6	W3/W6/W7	W3/W6/W7	W4/W7	C7	(E)	–
171	CLASSROOM	F1	B1	W3/W6/W7	W3/W6/W7	W6	W3/W6/W7	C7	(E)	–
172	CLASSROOM	F1	B1	W6	W4/W7	W3/W6/W7	W6/W7	C7	(E)	–
173	CLASSROOM	F1	B1	W3/W6/W7	W3/W6/W7	W6	W6/W7	C7	(E)	–
174	CLASSROOM	F1	B1	W6	W6/W7	W6/W7	W6/W7	C7	(E)	–
175	CLASSROOM	F1	B1	W6/W7	W6/W7	W6	W6/W7	C7	(E)	–
176	WORKROOM	F1	B1	W2/W6	W2/W6	W2/W6	W2/W6	C7	(E)	
177	WORKROOM	F1	B1	W2	W2	W2	W2	C7	(E)	
178	STORAGE	F1	B1	W4	W4	W4	W4	C4	(E)	REMOVE (E) CONC. PADS. GRIND FLOOR. PREPARE FOR (N) FNSH.
179	SECURITY	F1	B1	W2	W2	W2	W2	C7	(E)	
CLASSROOM BUILDING E-F										
258	ASB	F1	B1	W2/W6	W2/W6	W4	W2/W6	C7	(E)	–
258A	ASB STORAGE	F1	B1	W4	W2/W6	W2/W6	W2/W6	C7	(E)	–
260	CLASSROOM	F1	B1	W6	W6/W7	W6/W7	W6/W7	C7	(E)	–
261	CLASSROOM	F1	B1	W6/W7	W6/W7	W6	W6/W7	C7	(E)	–
262	CLASSROOM	F1	B1	W6	W6/W7	W6/W7	W6/W7	C7	(E)	–
263	CLASSROOM	F1	B1	W6/W7	W6/W7	W6	W6/W7	C7	(E)	–
264	COMPUTER LAB	F1	B1	W4	W2/W4	W4	W2/W6	C7	(E)	
265	WOMEN	F2	B2	W4/W8	W4/W8	W4/W8	W4/W8	C4	(E)	
266	GIRLS	F2	B2	W4/W8	W4/W8	W4/W8	W4/W8	C4	(E)	
267	BOYS	F2	B2	W4/W8	W4/W8	W4/W8	W4/W8	C4	(E)	
268	MEN	F2	B2	W4/W8	W4/W8	W4/W8	W4/W8	C4	(E)	
269	ELECTRICAL	F3	B3	W4	W4	W4	W4	C4	(E)	REMOVE (E) CONC. PADS. GRIND FLOOR.
270	CLASSROOM	F1	B1	W6	W6/W7	W6/W7	W6/W7	C7	(E)	–
271	CLASSROOM	F1	B1	W6/W7	W6/W7	W6	W6/W7	C7	(E)	–
272	STAFF ROOM	F1	B1	W2/W6	W2/W7	W2/W7	W2/W7	C7	(E)	–
273	CLASSROOM	F1	B1	W4/W6	W6/W7	W6	W6/W7	C7	(E)	–
274	SCIENCE LAB	F1	B1	W3/W6	W6/W7	W6/W7	W6/W7	C7	(E)	–
275	CLASSROOM	F1	B1	W6/W7	W6/W7	W6	W6/W7	C7	(E)	–
276	SCIENCE STORAGE	F1	B1	W2	W2	W2	W2	C7	(E)	–
277	STORAGE	F1	B1	W4	W4	W4	W4	C4	(E)	REMOVE (E) CONC. PADS. GRIND FLOOR. PREPARE FOR (N) FNSH.
278	TRANSFORMER	F3	B3	W9	W9	W9	W9	C2	(E)	
279	CUSTODIAN	F3	B3	W2	W2	W2	W2	C2	(E)	

KEYNOTES

KEYNOTES REFERENCE SPECIFICATION SECTIONS BY MEANS OF A FIVE-DIGIT NUMBER IDENTIFYING THE SECTION WHERE A MORE COMPLETE DESCRIPTION OF THE ITEM INDICATED WILL BE FOUND. THE LETTER SUFFIX OF THE KEYNOTE DOES NOT RELATE TO ANY CORRESPONDING REFERENCE LETTER IN THE SPECIFICATION. KEYNOTES DO NOT DESCRIBE CONSTRUCTION MEANS, METHODS, TECHNIQUES, SEQUENCES, OR PROCEDURES. NO TRADE JURISDICTIONAL ALLOCATION OF THIS WORK IS INTENDED BY THE SUBDIVISION OF THESE KEYNOTES. IT SHALL BE THE CONTRACTOR'S SOLE RESPONSIBILITY TO SUBDIVIDE THE WORK IN THE MANNER HE DEEMS NECESSARY.

NOTE:

ALL INTERIOR FINISHES TO COMPLY CBC CHAPTER 8, CFC SECTION 1103.5.3. TITLE 19 CCR.

FINISH LEGEND

FLOORS
- F1 RESILIENT FLOORING (O.F.C.I.)
- F2 CERAMIC TILE (UNGLAZED MOSAIC)
- F3 (E) TO REMAIN

BASE
- B1 4" RESILIENT BASE
- B2 CERAMIC TILE BASE – COVED
- B3 EXISTING TO REMAIN

WALLS
- W1 AC WALL PANEL
- W2 GLOSS PAINT O/ (E) GYPSUM BOARD OR (E) PLASTER
- W3 GLOSS PAINT ON (N) WOOD PANELING
- W4 GLOSS PAINT O/ (N) GYPSUM BOARD
- W5 GLOSS PAINT O/ (E) ACOUSTIC TILE
- W6 GLOSS PAINT O/ (E) WOOD PANELING
- W7 12" X 12" GLUE-UP ACOUSTIC TILE
- W8 CERAMIC TILE WAINSCOT
- W9 (E) TO REMAIN

CEILING
- C1 12" X 12" GLUE-UP ACOUSTIC TILE O/ (N) 5/8" GYP.BD
- C2 GLOSS PAINT O/ (E) GYPSUM BOARD OR (E) PLASTER
- C3 2' X 4' SUSPENDED CEILING SYSTEM
- C4 GLOSS PAINT O/ (N) GYPSUM BOARD
- C5 (E) TO REMAIN
- C6 GLOSS PAINT O/ (E) ACOUSTIC TILE
- C7 12" X 12" ACOUSTIC TILE O/ (E) STRIPPING OR (E) GYPSUM BOARD

KEY PLAN

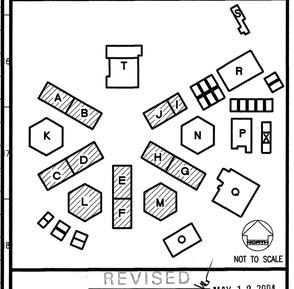

REVISED MAY 12 2004

IDENTIFICATION STAMP
DIV. OF THE STATE ARCHITECT
OFFICE OF REGULATION SERVICES
FILE NO. 19-H51
APPL. NO. 03-106434
AC. FLS. SS.
DATE

Dougherty + Dougherty
Architecture • Planning • Interior Design
2700 E. Imperial Hwy.
Brea, CA 92821
(714) 671-9720
Costa Mesa, CA 92626
(714) 427-0277

Copyright © 2002 Dougherty + Dougherty

Consultant Seal

Architect Seal

LA MIRADA HIGH SCHOOL
MODERNIZATION
NORWALK - LA MIRADA UNIFIED SCHOOL DISTRICT
13520 ADELFA DRIVE LA MIRADA, CA 90638

FINISH SCHEDULES

Date:	04-01-04
Job:	20237.50
Scale:	AS NOTED
Drawn:	
Revisions:	

A011

ROOM FINISH SCHEDULE

ROOM NO.	ROOM NAME	FLOOR	BASE	WALLS NORTH	WALLS EAST	WALLS SOUTH	WALLS WEST	CLG. TYPE	CLG. HT.	REMARKS
GYMNASIUM BUIDING Q										
633	GIRLS TOILET	F2	B2	W4/W8	W4/W8	W4/W8	W4/W8	C4	(E)	–
634	BOYS TOILET	F2	B2	W4/W8	W4/W8	W4/W8	W4/W8	C4	(E)	–
637	STORAGE	F3	B3	W2	W2	W2	W2/W4	C2	(E)	–
642	JANITOR	F3	B3	W2	W2	W2	W2/W4	C2	(E)	–
635	FOYER	F3	B3	W2/W4	W2/W4	W2	W2	C2	(E)	–
CLASSROOM BUILDING R										
760	WOOD SHOP	F3	B3	W5/W6	W5/W6	W5/W6	W5/W6	C6	(E)	
760A	STORAGE	F3	B3	W2	W2	W2	W2	C2	(E)	
760B	TOOLS	F3	B3	W6	–	W6	W6	C2	(E)	
760C	LOCKERS	F3	B1	W2	W2	W2	W2/W4	C2	(E)	
760E	LUMBER	F3	B3	W9	W9	W9	W9	C5	(E)	
761	GIRLS	F2	B2	W4/W8	W4/W8	W4/W8	W4/W8	C4	(E)	
762	BOYS	F2	B2	W4/W8	W4/W8	W4/W8	W4/W8	C4	(E)	
763	METAL SHOP	F3	B3	W5/W6	W5/W6	W5/W6	W5/W6	C6	(E)	
763A	TOOLS	F3	B3	W6	W6	W6	W6	C2	(E)	
763C	WOOD SHOP COMP. LAB	F1	B1	W2	W2	W2	W2	C1	(E)	
763E	PROJECT STORAGE	F3	B3	W2	W2	W2	W2	C2	(E)	
771	CLASSROOM	F1	B1	W2/W4/W5	W2/W4/W5	W4/W7	W2/W5	C3	10'–0"	
771B	OFFICE	F1	B1	W2	W2	W4	W2	C1	(E)	
771C	STORAGE	F3	B3	W2	W2	W2	W2	C2	(E)	
771D	TOOL STORAGE	F3	B3	W6	W6	W6	W6	C2	(E)	
771E	ELECTRICAL	F3	B3	W2	W2	W2	W2	C5	(E)	
772	CAD/CAM CLASSROOM	F1	B1	W4/W7	W6/W7	W4/W6/W7	W6/W7	C3	10'–0"	
772B	OFFICE	F1	B1	W4	W2	W2/W4	W2	C1	(E)	
773	COMPRESSOR	F3	B3	W9	W9	W9	W9	C5	(E)	
774	WATER HEATER	F3	B3	W9	W9	W9	W9	C5	(E)	
776	DUST COLLECTOR	F3	B3	W9	W9	W9	W9	C5	(E)	
MULTI- PURPOSE BUILDING T										
520	INSTRUMENTAL MUSIC	F1	B1	W6/W7	W6/W7	W6/W7	W6/W7	C1	(E)	–
520A	PRACTICE	F1	B1	W6/W7	W6/W7	W6/W7	W6/W7	C1	9'–0"	
520B	PRACTICE	F1	B1	W6/W7	W6/W7	W6/W7	W6/W7	C1	9'–0"	
520C	PRACTICE	F1	B1	W6/W7	W6/W7	W6/W7	W6/W7	C1	9'–0"	
523	OFFICE	F1	B1	W4	W4	W4	W4	C3	9'–0"	
524	CLASSROOM	F1	B1	W4	W4/W6/W7	W4/W6/W7	W6/W7	C3	10'–0"	
525	MECHANICAL	F3	B3	W9	W9	W9	W9	C5	(E)	
526	CLASSROOM	F1	B1	W4/W6/W7	W4/W6/W7	W4	W6/W7	C3	10'–0"	
522A	WHEEL CHAIR LIFT LOBBY	F1	B1	W2	W4	W4	W2	C5	(E)	
533	BOYS TOILET	F2	B2	W4/W8	W4/W8	W4/W8	W4/W8	C4	(E)	
534	GIRLS TOILET	F2	B2	W4/W8	W4/W8	W4/W8	W4/W8	C4	(E)	
532	FACULTY DINING	F1	B1	W9	W9	W9	W9	C5	(E)	

ROOM FINISH SCHEDULE

ROOM NO.	ROOM NAME	FLOOR	BASE	WALLS NORTH	WALLS EAST	WALLS SOUTH	WALLS WEST	CLG. TYPE	CLG. HT.	REMARKS
ADMINISTRATION BUILDING K										
801	PRINCIPAL	F3	B3	W9	W9	W9	W9	C1	VARIES	–
802	RECORDS	F3	B3	W9	W9	W9	W9	C4	VARIES	–
803	RECEPTION	F3	B3	W9	W9	W9	W9	C4	8'–1"	–
804	OFFICE	F3	B3	W9	W9	W9	W9	C1	VARIES	–
805	VAULT	F3	B3	W9	W9	W9	W9	C4	VARIES	–
806	OFFICE	F3	B3	W9	W9	W9	W9	C1	VARIES	–
807	OFFICE	F3	B3	W9	W9	W9	W9	C1	VARIES	–
808	OFFICE	F3	B3	W9	W9	W9	W9	C1	VARIES	–
809	OFFICE	F3	B3	W9	W9	W9	W9	C1	VARIES	–
810	OFFICE	F3	B3	W9	W9	W9	W9	C1	VARIES	–
811	OFFICE	F3	B3	W9	W9	W9	W9	C1	VARIES	–
812	OFFICE	F3	B3	W9	W9	W9	W9	C1	VARIES	–
813	HALLWAY	F3	B3	W9	W9	W9	W9	C4	8'–1"	–
813 B	HALLWAY	F3	B3	W9	W9	W9	W9	C4	8'–1"	–
814	RECEPTION	F1	B1	W9	W9	W9	W9	C1/C4	VARIES	SEE FLOOR PLAN FOR EXTEND OF NEW FLOORING & BASE
815	OFFICE	F3	B3	W9	W9	W9	W9	C1	VARIES	–
816	OFFICE	F3	B3	W9	W9	W9	W9	C1	VARIES	–
817	ASSISTANT PRINCIPAL	F3	B3	W9	W9	W9	W9	C1	VARIES	–
818	RECEPTION	F3	B3	W9	W9	W9	W9	C1/C4	8'–1"	–
819	OFFICE	F3	B3	W9	W9	W9	W9	C4	8'–1"	–
820	OFFICE	F3	B3	W9	W9	W9	W9	C1	VARIES	–
821	TOILET	F3	B3	W9	W9	W9	W9	C4	8'–1"	–
822	ATTENDANCE	F3	B3	W9	W9	W9	W9	C1/C4	VARIES	–
823	REST	F3	B3	W9	W9	W9	W9	C1	VARIES	–
824	TREATMENT	F3	B3	W9	W9	W9	W9	C4	VARIES	–
825	FILE	F3	B3	W9	W9	W9	W9	C1	VARIES	–
826	NURSE	F3	B3	W9	W9	W9	W9	C1/C4	VARIES	–
827	STORAGE	F3	B3	W9	W9	W9	W9	C4	8'–1"	–
830	FILE	F3	B3	W9	W9	W9	W9	C1	VARIES	–
831	FACULTY	F3	B3	W9	W9	W9	W9	C1/C4	VARIES	–
832	CUSTODIAN	F3	B3	W9	W9	W9	W9	C2	(E)	–
833	WOMEN'S TOILET	F3	B3	W9	W9	W9	W9	C2	8'–1"	REPLACE DAMAGED CERAMIC TILE WALL & FLOOR TO MATCH (E)
833 A	WOMEN'S TOILET	F3	B3	W9	W9	W9	W9	C2	8'–1"	REPLACE DAMAGED CERAMIC TILE WALL & FLOOR TO MATCH (E)
834	MECHANICAL	F3	B3	W9	W9	W9	W9	C5	VARIES	–
835	FACULTY ENTRY	F3	B3	W9	W9	W9	W9	C4	VARIES	–
836	COPY/WORKROOM	F3	B3	W9	W9	W9	W9	C4	VARIES	–
837	COPY/WORKROOM	F3	B3	W9	W9	W9	W9	C4	VARIES	–
838	MEN'S TOILET	F3	B3	W9	W9	W9	W9	C2	VARIES	–
839	SUPPLY	F3	B3	W9	W9	W9	W9	C4	VARIES	–
840	RECEPTION	F3	B3	W9	W9	W9	W9	C1	VARIES	–
841	RECEPTION	F1	B1	W9	W9	W9	W9	C1/C4	VARIES	SEE FLOOR PLAN FOR EXTEND OF NEW FLOORING & BASE
842	ASSISTANT PRINCIPAL	F3	B3	W9	W9	W9	W9	C1	VARIES	–
LIBRARY/THEATER BUILDING N										
410	LIBRARY	F1	B1	W2/W6	W2/W4/W6	W2/W4/W6	W2/W4/W6	C1/C3/C4	SEE PLAN	
410A	LIBRARY WORKROOM	F1	B1	W4	W4	W4	W4	C3	9'–0"	
410B	MEDIA WORKROOM	F1	B1	W4	W4	W4	W4	C3	9'–0"	
410C	MEDIA PRODUCTION	F1	B1	W2	W4	W2	W2	C1/C3	9'–0"	SOFFIT VARIES
410D	STORAGE	F1	B1	W2	W2	W2/W4	W2	C1/C3	9'–0"	SOFFIT VARIES
412	CONTROL	F1	B1	W4	W4	W4	W4	C4	9'–0"	
414	DRAMA	F1	B1	W2/W4	W1/W4	W1/W2/W4	W1/W2/W4	C1	VARIES	PAINT CEILING, GYP. BD. WOOD FLOORING, CONDUIT, DUCTWORK, DOORS AND FRAMES, LIGHT FIXTURES, ETC. BLACK.
415	PLATFORM	WOOD	B1	W2/W6	W4	W4	W4	C1	VARIES	PAINT CEILING, GYP. BD. WOOD FLOORING, CONDUIT, DUCTWORK, DOORS AND FRAMES, LIGHT FIXTURES, ETC. BLACK.
416	DRESSING ROOM	F1	B1	W2	W4	W2	W2/W4	C1	VARIES	
417	TOILET	REMARKS	B1	W4	W4	W4	W4	C4	9'–0"	FLOORING: SHEET VINYL W/ INTEGRATED COVE BASE
418	WORK AREA	F1	B1	W2/W4	W2/W4	W2	W2/W4	C1	VARIES	
418A	OFFICE	F1	B1	W4	W4	W4	W4	C3	9'–0"	
419	COSTUME STORAGE	F1	B1	W2/W4	W2	W2	W2	C1	VARIES	
420	CLASSROOM	F1	B1	W6	W4	W2/W4/W6	W2/W6	C1	VARIES	
421	ELECTRICAL	F3	B3	W9	W9	W9	W9	C5	(E)	
422	STORAGE	F3	B3	W9	W9	W9	W9	C5	(E)	
GIRLS LOCKER BUILDING O										
632	GIRLS TOILET	F2	B2	W4/W8	W4/W8	W4/W8	W4/W8	C4	(E)	
621	CLASSROOM	F1	B1	W6/W7	W6/W7	W6/W7	W4/W6/W7	C1/C4	(E)	PAINT (E) SUSPENDED WOOD BEAM ABOVE
BOYS LOCKER BUILDING P										
613	BOYS TOILET	F2	B2	W4/W8	W4/W8	W4/W8	W4/W8	C4	(E)	

KEYNOTES

KEYNOTES REFERENCE SPECIFICATION SECTIONS BY MEANS OF A FIVE-DIGIT NUMBER IDENTIFYING THE SECTION WHERE A MORE COMPLETE DESCRIPTION OF THE ITEM INDICATED WILL BE FOUND. THE LETTER SUFFIX OF THE KEYNOTE DOES NOT RELATE TO ANY CORRESPONDING REFERENCE LETTER IN THE SPECIFICATION. KEYNOTES DO NOT DESCRIBE CONSTRUCTION MEANS, METHODS, TECHNIQUES, SEQUENCES, OR PROCEDURES. NO TRADE JURISDICTIONAL ALLOCATION OF THIS WORK IS INTENDED BY THE SUBDIVISION OF THESE KEYNOTES. IT SHALL BE THE CONTRACTOR'S SOLE RESPONSIBILITY TO SUBDIVIDE THE WORK IN THE MANNER HE DEEMS NECESSARY.

NOTE:
ALL INTERIOR FINISHES TO COMPLY CBC CHAPTER 8, CFC SECTION 1103.3.3 TITLE 19 CCR.

FINISH LEGEND

FLOORS
- F1 RESILIENT FLOORING (O.F.C.I.)
- F2 CERAMIC TILE (UNGLAZED MOSAIC)
- F3 (E) TO REMAIN

BASE
- B1 4" RESILIENT BASE
- B2 CERAMIC TILE BASE – COVED
- B3 EXISTING TO REMAIN

WALLS
- W1 AC WALL PANEL
- W2 GLOSS PAINT O/ (E) GYPSUM BOARD OR (E) PLASTER
- W3 GLOSS PAINT ON (N) WOOD PANELING
- W4 GLOSS PAINT O/ (N) GYPSUM BOARD
- W5 GLOSS PAINT O/ (E) ACOUSTIC TILE
- W6 GLOSS PAINT O/ (E) WOOD PANELING
- W7 12" X 12" GLUE-UP ACOUSTIC TILE
- W8 CERAMIC TILE WAINSCOT
- W9 (E) TO REMAIN

CEILING
- C1 12" X 12" GLUE-UP ACOUSTIC TILE O/ (N) 5/8" GYP.BD
- C2 GLOSS PAINT O/ (E) GYPSUM BOARD OR (E) PLASTER
- C3 2' X 4' SUSPENDED CEILING SYSTEM
- C4 GLOSS PAINT O/ (N) GYPSUM BOARD
- C5 (E) TO REMAIN
- C6 GLOSS PAINT O/ (E) ACOUSTIC TILE
- C7 12" X 12" ACOUSTIC TILE O/ (E) STRIPPING OR (E) GYPSUM BOARD

KEY PLAN

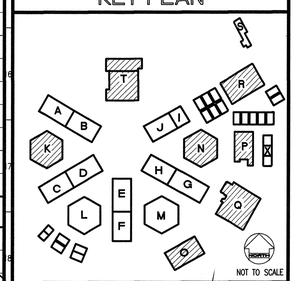

REVISED MAY 1 2 2004

IDENTIFICATION STAMP
DIV. OF THE STATE ARCHITECT
OFFICE OF REGULATION SERVICES
FILE NO. 19-H51
APPL. NO. 03-106434
AC. N FLS. NCT SS.
DATE

Dougherty ■ Dougherty
Architecture • Planning • Interior Design
2344 Walnut Grove Drive
Rancho Cucamonga, CA 91730
(714) 427-0277

Copyright © 2002 Dougherty + Dougherty

Consultant Seal

Architect Seal

LA MIRADA HIGH SCHOOL
MODERNIZATION
NORWALK - LA MIRADA UNIFIED SCHOOL DISTRICT
13520 ADELFA DRIVE LA MIRADA, CA 90638

FINISH SCHEDULES

Date:	04-01-04
Job:	20237.50
Scale:	AS NOTED
Drawn:	
Revisions:	
1	12-01-03

A012

DOOR SCHEDULE

DOOR NUMBER	DOOR SIZE WIDTH X HEIGHT	DOOR TYPE	DOOR MAT/FIN	LABEL	HARDWARE NO.	FRAME TYPE SHT. A013	FRAME MAT/FIN	DETAILS (SHEET A017 U.N.O.) HEAD	JAMB	JAMB	THRESH	SIGN DETAILS SHT. A502	REMARKS
CLASSROOM BUILDING C-D													
160/1	3'-0" X 7'-0"	A	HM/PSG	–	1	(E)	(E)/PSG	–	–	–	R19	E8, H12	EXTERIOR, REVERSE DOOR SWING
160/2	3'-0" X 7'-0"	A	HM/PSG	–	1	(E)	(E)/PSG	–	–	–	R19	E8, H12	EXTERIOR
161/1	3'-0" X 7'-0"	A	HM/PSG	–	1	(E)	(E)/PSG	–	–	–	R19	E8, H12	EXTERIOR, REVERSE DOOR SWING
161/2	3'-0" X 7'-0"	A	HM/PSG	–	1	(E)	(E)/PSG	–	–	–	R19	E8, H12	EXTERIOR
162/1	3'-0" X 7'-0"	A	HM/PSG	–	14	1	HM/PSG	R16	R4	R4	R19	E8, H12	EXTERIOR
162/2	3'-8" X 7'-0"	A	HM/PSG	–	7	1	HM/PSG				R19	E8, H12	EXTERIOR
163/1	3'-0" X 7'-0"	A	HM/PSG	–	14	1	HM/PSG	R16	R4	R4	R19	E8, H12	EXTERIOR
163/2	3'-8" X 7'-0"	A	HM/PSG	–	7	1	HM/PSG				R19	E8, H12	EXTERIOR
164/1	PR. 2'-10" X 7'-6"	B	HM/PSG	–	15	(E)	(E)/PSG	–	–	–	–	E8	EXTERIOR
164/2	PR. 2'-10" X 7'-6"	B	HM/PSG	–	15	(E)	(E)/PSG	–	–	–	–	E8	EXTERIOR
164/3	PR. 2'-10" X 7'-6"	B	HM/PSG	–	15	(E)	(E)/PSG	–	–	–	–	E8	EXTERIOR
164/4	3'-0" X 7'-0"	B	HM/PSG	–	3	(E)	(E)/PSG	–	–	–	–	E8	EXTERIOR
165/1	3'-0" X 7'-0"	A	HM/PSG	–	16	1	HM/PSG	R16 SIM.	R4	R4	R19	E8	EXTERIOR
165/2	3'-0" X 7'-0"	A	HM/PSG	–	2	(E)	(E)/PSG	–	–	–	R19	E8	EXTERIOR
167/1	3'-0" X 7'-0"	A	HM/PSG	–	3	(E)	(E)/PSG	–	–	–	–	E8	EXTERIOR
168/1	4'-0" X 7'-0"	A	HM/PSG	–	8	(E)	(E)/PSG	–	–	–	R19	E8	EXTERIOR
170/1	3'-0" X 7'-0"	A	HM/PSG	–	1	(E)	(E)/PSG	–	–	–	R19	E8	EXTERIOR
170/2	3'-0" X 7'-0"	A	HM/PSG	–	1	(E)	(E)/PSG	–	–	–	R19	E8	EXTERIOR
171/1	3'-0" X 7'-0"	A	HM/PSG	–	1	(E)	(E)/PSG	–	–	–	R19	E8	EXTERIOR
171/2	3'-0" X 7'-0"	A	HM/PSG	–	1	(E)	(E)/PSG	–	–	–	R19	E8	EXTERIOR
172/1	3'-0" X 7'-0"	A	HM/PSG	–	1	(E)	(E)/PSG	–	–	–	R19	E8	EXTERIOR
172/2	3'-0" X 7'-0"	A	HM/PSG	–	1	(E)	(E)/PSG	–	–	–	R19	E8	EXTERIOR
173/1	3'-0" X 7'-0"	A	HM/PSG	–	1	(E)	(E)/PSG	–	–	–	R19	E8	EXTERIOR
173/2	3'-0" X 7'-0"	A	HM/PSG	–	1	(E)	(E)/PSG	–	–	–	R19	E8	EXTERIOR
173/3	3'-0" X 7'-0"	C	SCW/PSG	–	5	(E)	(E)/PSG	–	–	–	–	E8*	
174/1	3'-0" X 7'-0"	A	HM/PSG	–	1	(E)	(E)/PSG	–	–	–	R19	E8	EXTERIOR
174/2	3'-0" X 7'-0"	A	HM/PSG	–	1	(E)	(E)/PSG	–	–	–	R19	E8	EXTERIOR
175/1	3'-0" X 7'-0"	A	HM/PSG	–	1	(E)	(E)/PSG	–	–	–	R19	E8	EXTERIOR
175/2	3'-0" X 7'-0"	A	HM/PSG	–	1	(E)	(E)/PSG	–	–	–	R19	E8	EXTERIOR
176/1	3'-0" X 7'-0"	A	HM/PSG	–	16	1	HM/PSG	R16	V16	V16	R19	E8	EXTERIOR
176/2	3'-0" X 7'-0"	C	SCW/PSG	–	19	1	HM/PSG	R12	R12	R12	M19	E8*	
177/1	3'-0" X 7'-0"	C	SCW/PSG	–	20	1	HM)/PSG	R12	R12	R12	M19	E8*	
177/2	3'-0" X 7'-0"	C	SCW/PSG	–	19	1	HM/PSG	R12	R12	R12	M19	E8*	
178/1	4'-0" X 7'-0"	A	HM/PSG	–	8	(E)	(E)/PSG	–	–	–	R19	E8	EXTERIOR
178/2	PR. 2'-9" X 7'-0"	D	HM/PSG	–	9	(E)	(E)/PSG	–	–	–	R19	E8	EXTERIOR
179/1	3'-0" X 7'-0"	A	HM/PSG	–	16	1	HM/PSG	R16	V16	V16	R19	E8	EXTERIOR

* TWO ROOM IDENTIFICATION SIGNS AT BOTH SIDES OF THE DOOR

DOOR SCHEDULE

DOOR NUMBER	DOOR SIZE WIDTH X HEIGHT	DOOR TYPE	DOOR MAT/FIN	LABEL	HARDWARE NO.	FRAME TYPE SHT. A013	FRAME MAT/FIN	DETAILS (SHEET A017 U.N.O.) HEAD	JAMB	JAMB	THRESH	SIGN DETAILS SHT. A502	REMARKS
CLASSROOM BUILDING A-B													
560/1	3'-0" X 7'-0"	A	HM/PSG	–	1	(E)	(E)/PSG	–	–	–	R19	E8	EXTERIOR
560/2	3'-0" X 7'-0"	A	HM/PSG	–	1	(E)	(E)/PSG	–	–	–	R19	E8	EXTERIOR
561/1	3'-0" X 7'-0"	A	HM/PSG	–	1	(E)	(E)/PSG	–	–	–	R19	E8	EXTERIOR
561/2	3'-0" X 7'-0"	A	HM/PSG	–	1	(E)	(E)/PSG	–	–	–	R19	E8	EXTERIOR
562/1	3'-0" X 7'-0"	A	HM/PSG	–	1	(E)	(E)/PSG	–	–	–	R19	E8	EXTERIOR
562/2	3'-0" X 7'-0"	A	HM/PSG	–	1	(E)	(E)/PSG	–	–	–	R19	E8	EXTERIOR
563/1	3'-0" X 7'-0"	A	HM/PSG	–	1	(E)	(E)/PSG	–	–	–	R19	E8	EXTERIOR
563/2	3'-0" X 7'-0"	A	HM/PSG	–	1	(E)	(E)/PSG	–	–	–	R19	E8	EXTERIOR
564/1	3'-0" X 7'-0"	A	HM/PSG	–	1	(E)	(E)/PSG	–	–	–	R19	E8	EXTERIOR
565/1	3'-0" X 7'-0"	A	HM/PSG	–	2	(E)	(E)/PSG	–	–	–	R19	E8	EXTERIOR
566/1	4'-0" X 7'-0"	B	HM/PSG	–	3	(E)	(E)/PSG	–	–	–	–	E8	EXTERIOR
566/2	2'-8" X 7'-0"	E	HM/PSG	–	3	(E)	(E)/PSG	–	–	–	–	E8	EXTERIOR
567/1	PR. 3'-0" X 7'-0"	D	HM/PSG	–	4	2	HM/PSG	R16	R4	R4	R19	E8	EXTERIOR
570/1	3'-0" X 7'-0"	A	HM/PSG	–	1	(E)	(E)/PSG	–	–	–	R19	E8	EXTERIOR
570/2	3'-0" X 7'-0"	A	HM/PSG	–	1	(E)	(E)/PSG	–	–	–	R19	E8	EXTERIOR
571/1	3'-0" X 7'-0"	A	HM/PSG	–	1	(E)	(E)/PSG	–	–	–	R19	E8	EXTERIOR
571/2	3'-0" X 7'-0"	A	HM/PSG	–	1	(E)	(E)/PSG	–	–	–	R19	E8	EXTERIOR
572/1	3'-0" X 7'-0"	A	HM/PSG	–	1	(E)	(E)/PSG	–	–	–	R19	E8	EXTERIOR
572/2	3'-0" X 7'-0"	A	HM/PSG	–	1	(E)	(E)/PSG	–	–	–	R19	E8	EXTERIOR
572/3	3'-0" X 7'-0"	C	SCW/PSG	–	13	(E)	(E)/PSG	–	–	–	–	E8*	
573/1	3'-0" X 7'-0"	A	HM/PSG	–	1	(E)	(E)/PSG	–	–	–	R19	E8	EXTERIOR
573/2	3'-0" X 7'-0"	A	HM/PSG	–	1	(E)	(E)/PSG	–	–	–	R19	E8	EXTERIOR
574/1	3'-0" X 7'-0"	A	HM/PSG	–	1	(E)	(E)/PSG	–	–	–	R19	E8	EXTERIOR
574/2	3'-0" X 7'-0"	A	HM/PSG	–	1	(E)	(E)/PSG	–	–	–	R19	E8	EXTERIOR
574/3	3'-0" X 7'-0"	C	SCW/PSG	–	13	(E)	(E)/PSG	–	–	–	–	E8*	
575/1	3'-0" X 7'-0"	A	HM/PSG	–	1	(E)	(E)/PSG	–	–	–	R19	E8	EXTERIOR
575/2	3'-0" X 7'-0"	A	HM/PSG	–	1	(E)	(E)/PSG	–	–	–	R19	E8	EXTERIOR
576/1	3'-0" X 7'-0"	A	HM/PSG	–	16	1	HM/PSG	R16	V16	V16	R19	E8	EXTERIOR
576/2	3'-0" X 7'-0"	C	SCW/PSG	–	6	(E)	(E)/PSG	–	–	–	M19	E8*	
577/1	3'-0" X 7'-0"	A	HM/PSG	–	16	1	HM/PSG	R16	V16	V16	R19	E8	EXTERIOR, SEE PLAN FOR SWING
577/2	3'-0" X 7'-0"	C	SCW/PSG	–	19	1	HM/PSG	R12	R12	R12	M19	E8*	
578/1	4-0" X 7'-0"	A	HM/PSG	–	8	(E)	(E)/PSG	–	–	–	R19	E8	EXTERIOR
579/1	3'-0" X 7'-0"	A	HM/PSG	–	3	(E)	(E)/PSG	–	–	–	–	E8	EXTERIOR
580/1	PR. 3'-0" X 7'-0"	D	HM/PSG	–	4	2	HM/PSG	R16	R4	R4	R19	E8	EXTERIOR
581/1	3'-0" X 7'-0"	A	HM/PSG	–	10	1	HM/PSG	V12	V12	V16	V19	A12,E12	EXTERIOR
582/1	3'-0" X 7'-0"	A	HM/PSG	–	11	1	HM/PSG	R8	R8	R8	V19	A12,E12	EXTERIOR
583/1	3'-0" X 7'-0"	A	HM/PSG	–	11	1	HM/PSG	R8	R8	R8	V19	A16,E16	EXTERIOR
584/1	3'-0" X 7'-0"	A	HM/PSG	–	10	1	HM/PSG	V12	V12	V16	V19	A16,E16	EXTERIOR

* TWO ROOM IDENTIFICATION SIGNS AT BOTH SIDES OF THE DOOR

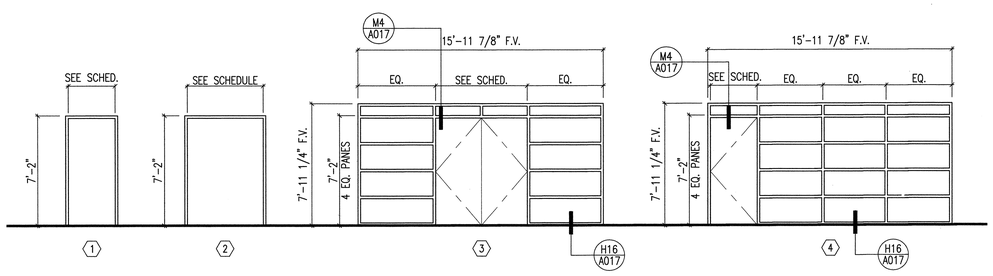

HOLLOW METAL DOOR FRAME TYPES

M19
1/4"=1'-0"

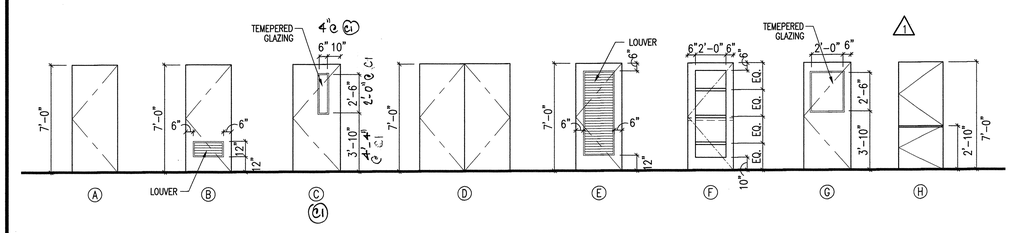

DOOR TYPES

A19
1/4"=1'-0"

KEYNOTES

KEYNOTES REFERENCE SPECIFICATION SECTIONS BY MEANS OF A FIVE-DIGIT NUMBER IDENTIFYING THE SECTION WHERE A MORE COMPLETE DESCRIPTION OF THE ITEM INDICATED WILL BE FOUND. THE LETTER SUFFIX OF THE KEYNOTE DOES NOT RELATE TO ANY CORRESPONDING REFERENCE LETTER IN THE SPECIFICATION. KEYNOTES DO NOT DESCRIBE CONSTRUCTION MEANS, METHODS, TECHNIQUES, SEQUENCES, OR PROCEDURES. NO TRADE JURISDICTIONAL ALLOCATION OF THIS WORK IS INTENDED BY THE SUBDIVISION OF THESE KEYNOTES. IT SHALL BE THE CONTRACTOR'S SOLE RESPONSIBILITY TO SUBDIVIDE THE WORK IN THE MANNER HE DEEMS NECESSARY.

DOOR SCHEDULE NOTES

DOOR/FRAME
AN – ANODIZED
PSG – PAINT SEMI-GLOSS

ABBREVIATIONS
HM – HOLLOW METAL
SCW – SOLID CORE WOOD
WMG – WIRE MESH GATE
T – TEMPERED GLASS
PH – PANIC HARDWARE
W – WOOD
ALUM – ALUMINUM

GENERAL NOTES
1. FIELD VERIFY EXIST. DOOR & FRAME CONDITIONS PRIOR TO FABRICATION. NOTIFY ARCHITECT IF EXISTING CONDITIONS DO NOT MATCH INFO ON DWGS.
2. ALL NON-EXIT DOORS SHALL HAVE LEVER TYPE HARDWARE.
3. EXIT DOORS SHALL BE OPERABLE FROM THE INSIDE WITHOUT THE USE OF A KEY OR ANY SPECIAL KNOWLEDGE OR FORCE.
4. ALL DOOR GLAZING TO BE 1/4" TEMPERED GLASS, UNLESS NOTED OTHERWISE.
5. THE LETTERS "PR" PRECEDING "DOOR SIZE" IN THE INDICATED SCHEDULE DIMENSIONS A PAIR OF DOORS REFER TO INDIVIDUAL DOOR SIZES BOTH DOOR LEAVES ARE THE SAME SIZE, U.N.O.
6. DOORS SHALL BE 1 3/4" THICK U.N.O. OR SPECIFIED.
7. GLAZING IN ALL FIRE RATED ASSEMBLIES SHALL BE U.L. LISTED 1/4" THICK WIRE GLASS, INSTALLED IN STEEL FRAMES.
8. COORDINATE DOOR SWING WITH FLOOR PLANS.
9. SOFFIT MECHANICAL ACCESS DOORS TO RECEIVE HARDWARE SET # 52.

KEY PLAN

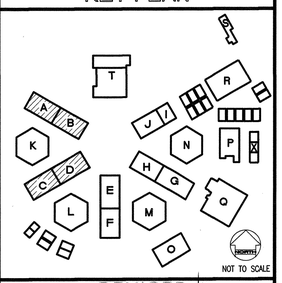

REVISED
MAY 1 2 2004

IDENTIFICATION STAMP
DIV. OF THE STATE ARCHITECT
OFFICE OF REGULATION SERVICES
FILE NO. 19-H51
APPL. NO. 03-106434
AC. FLS. SS.
DATE

Dougherty + Dougherty
Architecture • Planning • Interior Design
3194-D Airport Loop Drive
Costa Mesa, CA 92626
(714) 427-0277

Copyright © 2002 Dougherty + Dougherty

Consultant Seal

Architect Seal

LA MIRADA HIGH SCHOOL
MODERNIZATION
NORWALK - LA MIRADA UNIFIED SCHOOL DISTRICT
13520 ADELFA DRIVE LA MIRADA, CA 90638

DOOR SCHEDULES
BUILDINGS
A-B & C-D

Date:	04-01-04
Job:	20237.50
Scale:	AS NOTED
Drawn:	
Revisions:	
1	12-01-03

A013

DOOR SCHEDULE

DOOR NUMBER	DOOR SIZE WIDTH X HEIGHT	DOOR TYPE	DOOR MAT/FIN	LABEL	HARDWARE NO.	FRAME TYPE SHT. A013	FRAME MAT/FIN	DETAILS (SHEET A017 U.N.O.) HEAD	JAMB	JAMB	THRESH	SIGN DETAILS SHT. A502	REMARKS
CLASSROOM BUILDING G-H													
360/1	3'-0" X 7'-0"	A	HM/PSG	–	1	(E)	(E)/PSG	–	–	–	R19	E8	EXTERIOR
360/2	3'-0" X 7'-0"	A	HM/PSG	–	1	(E)	(E)/PSG	–	–	–	R19	E8	EXTERIOR
361/1	3'-0" X 7'-0"	A	HM/PSG	–	1	(E)	(E)/PSG	–	–	–	R19	E8	EXTERIOR
361/2	3'-0" X 7'-0"	A	HM/PSG	–	1	(E)	(E)/PSG	–	–	–	R19	E8	EXTERIOR
362/1	3'-0" X 7'-0"	A	HM/PSG	–	2	(E)	(E)/PSG	–	–	–	R19	E8	EXTERIOR
362/2	3'-0" X 7'-0"	C	SCW/PSG	–	6	(E)	(E)/PSG	–	–	–	M19	E8*	
363/1	3'-0" X 7'-0"	A	HM/PSG	–	2	(E)	(E)/PSG	–	–	–	R19	E8	EXTERIOR
363/2	3'-0" X 7'-0"	C	SCW/PSG	–	6	(E)	(E)/PSG	–	–	–	M19	E8*	
364/1	3'-0" X 7'-0"	A	HM/PSG	–	1	(E)	(E)/PSG	–	–	–	R19	E8	EXTERIOR
364/2	3'-0" X 7'-0"	A	HM/PSG	–	1	(E)	(E)/PSG	–	–	–	R19	E8	EXTERIOR
364/3	3'-0" X 7'-0"	C	SCW/PSG	–	13	(E)	(E)/PSG	–	–	–	–	E8*	
365/1	3'-0" X 7'-0"	A	HM/PSG	–	1	(E)	(E)/PSG	–	–	–	R19	E8	EXTERIOR
365/2	3'-0" X 7'-0"	A	HM/PSG	–	1	(E)	(E)/PSG	–	–	–	R19	E8	EXTERIOR
366/1	PR. 2'-10" X 7'-6"	B	HM/PSG	–	15	(E)	(E)/PSG	–	–	–	–	E8	EXTERIOR
366/2	PR. 2'-10" X 7'-6"	B	HM/PSG	–	15	(E)	(E)/PSG	–	–	–	–	E8	EXTERIOR
367/1	3'-0" X 7'-0"	A	HM/PSG	–	9	1	HM/PSG	R4	R4	M16	R19	E8	EXTERIOR
368/1	4'-0" X 7'-0"	D	HM/PSG	–	8	1	HM/PSG	M16 SIM.	M16	M16	R19	E8	EXTERIOR
369/1	PR. 4'-6" X 7'-0"	D	HM/PSG	–	9	(E)	(E)/PSG	–	–	–	R19	E8	EXTERIOR
369/2	3'-0" & 1'-6" X 7'-0"	D	HM/PSG	–	9	(E)	(E)/PSG	–	–	–	R19	E8	EXTERIOR
370/1	3'-0" X 7'-0"	A	HM/PSG	–	1	(E)	(E)/PSG	–	–	–	R19	E8	EXTERIOR
370/2	3'-0" X 7'-0"	A	HM/PSG	–	1	(E)	(E)/PSG	–	–	–	R19	E8	EXTERIOR
371/1	3'-0" X 7'-0"	A	HM/PSG	–	1	(E)	(E)/PSG	–	–	–	R19	E8	EXTERIOR
371/2	3'-0" X 7'-0"	A	HM/PSG	–	1	(E)	(E)/PSG	–	–	–	R19	E8	EXTERIOR
372/1	3'-0" X 7'-0"	A	HM/PSG	–	1	(E)	(E)/PSG	–	–	–	R19	E8	EXTERIOR
372/2	3'-0" X 7'-0"	A	HM/PSG	–	1	(E)	(E)/PSG	–	–	–	R19	E8	EXTERIOR
373/1	3'-0" X 7'-0"	A	HM/PSG	–	1	(E)	(E)/PSG	–	–	–	R19	E8	EXTERIOR
373/2	3'-0" X 7'-0"	A	HM/PSG	–	1	(E)	(E)/PSG	–	–	–	R19	E8	EXTERIOR
374/1	3'-0" X 7'-0"	A	HM/PSG	–	1	(E)	(E)/PSG	–	–	–	R19	E8	EXTERIOR
374/2	3'-0" X 7'-0"	A	HM/PSG	–	1	(E)	(E)/PSG	–	–	–	R19	E8	EXTERIOR
374/3	3'-0" X 7'-0"	C	SCW/PSG	–	5	(E)	(E)/PSG	–	–	–	–	E8*	
375/1	3'-0" X 7'-0"	A	HM/PSG	–	1	(E)	(E)/PSG	–	–	–	R19	E8	EXTERIOR
375/2	3'-0" X 7'-0"	A	HM/PSG	–	1	(E)	(E)/PSG	–	–	–	R19	E8	EXTERIOR
376/1	PR. 3'-0" X 7'-0"	C	HM/PSG	–	4	2	HM/PSG	R16	R4	R4	R19	E8	EXTERIOR
376/2	PR. 3'-0" X 7'-0"	C	HM/PSG	–	4	2	HM/PSG	R16	R4	R4	R19	E8	EXTERIOR
378/1	3'-0" X 7'-0"	A	HM/PSG	–	3	(E)	(E)/PSG	–	–	–	–	E8	EXTERIOR
380/1	3'-0" X 7'-0"	A	HM/PSG	–	2	(E)	(E)/PSG	–	–	–	R19	E8	EXTERIOR
381/1	4'-0" X 7'-0"	A	HM/PSG	–	8	1	HM/PSG	M16 SIM.	M16	M16	R19	E8	EXTERIOR
381/2	PR. 2'-9" X 7'-0"	D	HM/PSG	–	9	(E)	(E)/PSG	–	–	–	R19	E8	EXTERIOR
382/1	3'-0" X 7'-0"	B	HM/PSG	–	3	(E)	(E)/PSG	–	–	–	–	E8	EXTERIOR
CLASSROOM BUILDING I-J													
460/1	3'-0" X 7'-0"	A	HM/PSG	–	1	(E)	(E)/PSG	–	–	–	R19	E8	EXTERIOR
460/2	3'-0" X 7'-0"	A	HM/PSG	–	1	(E)	(E)/PSG	–	–	–	R19	E8	EXTERIOR
461/1	3'-0" X 7'-0"	A	HM/PSG	–	1	(E)	(E)/PSG	–	–	–	R19	E8	EXTERIOR
461/2	3'-0" X 7'-0"	A	HM/PSG	–	1	(E)	(E)/PSG	–	–	–	R19	E8	EXTERIOR
462/1	PR. 3'-0" X 7'-0"	A	HM/PSG	–	15	2	HM/PSG	–	–	–	–	E8	EXTERIOR
463/1	3'-0" X 7'-0"	C	HM/PSG	–	1	(E)	(E)/PSG	–	–	–	R19	E8	EXTERIOR
463/2	3'-0" X 7'-0"	C	SCW/PSG	–	6	(E)	(E)/PSG	–	–	–	M19	E8*	
463/3	3'-0" X 7'-0"	C	SCW/PSG	–	6	(E)	(E)/PSG	–	–	–	M19	E8*	
463/4	3'-0" X 7'-0"	C	SCW/PSG	–	26	(E)	(E)/PSG	–	–	–	M19	E8*	
463/5	3'-0" X 7'-0"	C	SCW/PSG	–	26	(E)	(E)/PSG	–	–	–	M19	E8*	
464/1	3'-0" X 7'-0"	A	HM/PSG	–	1	(E)	(E)/PSG	–	–	–	R19	E8	EXTERIOR
464/2	3'-0" X 7'-0"	A	HM/PSG	–	1	(E)	(E)/PSG	–	–	–	R19	E8	EXTERIOR
465/1	3'-0" X 7'-0"	A	HM/PSG	–	1	(E)	(E)/PSG	–	–	–	R19	E8	EXTERIOR
465/2	3'-0" X 7'-0"	A	HM/PSG	–	1	(E)	(E)/PSG	–	–	–	R19	E8	EXTERIOR
466/1	3'-0" X 7'-0"	A	HM/PSG	–	27	(E)	(E)/PSG	–	–	–	–	E8	
467/1	PR. 3'-0" X 7'-0"	C	HM/PSG	–	9	(E)	(E)/PSG	–	–	–	R19	E8	EXTERIOR
467/2	PR. 3'-0" X 7'-0"	C	HM/PSG	–	9	(E)	(E)/PSG	–	–	–	R19	E8	EXTERIOR
470/1	3'-0" X 7'-0"	A	HM/PSG	–	1	(E)	(E)/PSG	–	–	–	R19	E8	EXTERIOR
470/2	3'-0" X 7'-0"	A	HM/PSG	–	1	(E)	(E)/PSG	–	–	–	R19	E8	EXTERIOR
471/1	3'-0" X 7'-0"	A	HM/PSG	–	1	(E)	(E)/PSG	–	–	–	R19	E8	EXTERIOR
471/2	3'-0" X 7'-0"	A	HM/PSG	–	1	(E)	(E)/PSG	–	–	–	R19	E8	EXTERIOR
472/1	3'-0" X 7'-0"	A	HM/PSG	–	28	1	HM/PSG	V12	V12	V16	V19	A16, E16	EXTERIOR, SEE PLAN FOR SWING
473/1	3'-0" X 7'-0"	A	HM/PSG	–	11	1	HM/PSG	V12	V8	V12	V19	A16, E16	EXTERIOR
474/1	3'-0" X 7'-0"	A	HM/PSG	–	11	1	HM/PSG	V12	V8	V12	V19	A12, E12	EXTERIOR
475/1	3'-0" X 7'-0"	A	HM/PSG	–	28	1	HM/PSG	V12	V12	V16	V19	A12, E12	EXTERIOR, SEE PLAN FOR SWING

* TWO ROOM IDENTIFICATION SIGNS AT BOTH SIDES OF THE DOOR

DOOR SCHEDULE

DOOR NUMBER	DOOR SIZE WIDTH X HEIGHT	DOOR TYPE	DOOR MAT/FIN	LABEL	HARDWARE NO.	FRAME TYPE SHT. A013	FRAME MAT/FIN	DETAILS (SHEET A017 U.N.O.) HEAD	JAMB	JAMB	THRESH	SIGN DETAILS SHT. A502	REMARKS
CLASSROOM BUILDING E-F													
258/1	3'-0" X 7'-0"	A	HM/PSG	–	1	(E)	(E)/PSG	–	–	–	R19	E8	EXTERIOR
258/2	3'-0" X 7'-0"	C	SCW/PSG	–	19	1	HM/PSG	V4	V4	V4	M19	E8	
258A/1	3'-0" X 7'-0"	A	HM/PSG	–	8	(E)	(E)/PSG	–	–	–	R19	E8	EXTERIOR
260/1	3'-0" X 7'-0"	A	HM/PSG	–	1	(E)	(E)/PSG	–	–	–	R19	E8	EXTERIOR
260/2	3'-0" X 7'-0"	A	HM/PSG	–	1	(E)	(E)/PSG	–	–	–	R19	E8	EXTERIOR
261/1	3'-0" X 7'-0"	A	HM/PSG	–	1	(E)	(E)/PSG	–	–	–	R19	E8	EXTERIOR
261/2	3'-0" X 7'-0"	A	HM/PSG	–	1	(E)	(E)/PSG	–	–	–	R19	E8	EXTERIOR
262/1	3'-0" X 7'-0"	A	HM/PSG	–	1	(E)	(E)/PSG	–	–	–	R19	E8	EXTERIOR
262/2	3'-0" X 7'-0"	A	HM/PSG	–	1	(E)	(E)/PSG	–	–	–	R19	E8	EXTERIOR
263/1	3'-0" X 7'-0"	A	HM/PSG	–	1	(E)	(E)/PSG	–	–	–	R19	E8	EXTERIOR
263/2	3'-0" X 7'-0"	A	HM/PSG	–	1	(E)	(E)/PSG	–	–	–	R19	E8	EXTERIOR
264/1	PR. 3'-0" X 7'-0"	C	HM/PSG	–	4	2	HM/PSG	R16	R4	R4	R19	E8	EXTERIOR
264/2	PR. 3'-0" X 7'-0"	C	HM/PSG	–	4	2	HM/PSG	R16	R4	R4	R19	E8	EXTERIOR
265/1	3'-0" X 7'-0"	A	HM/PSG	–	10	1	HM/PSG	V12	V12	V16	V19	A12, E12	EXTERIOR
266/1	3'-0" X 7'-0"	A	HM/PSG	–	11	1	HM/PSG	R8	V8	V12	V19	A12, E12	EXTERIOR
267/1	3'-0" X 7'-0"	A	HM/PSG	–	11	1	HM/PSG	R8	R8	R8	V19	A16, E16	EXTERIOR
268/1	3'-0" X 7'-0"	A	HM/PSG	–	10	1	HM/PSG	V12	V12	V16	V19	A16, E16	EXTERIOR
269/1	4'-0" X 7'-0"	B	HM/PSG	–	3	(E)	(E)/PSG	–	–	–	–	E8	EXTERIOR
269/2	2'-8" X 7'-0"	E	HM/PSG	–	3	(E)	(E)/PSG	–	–	–	–	E8	EXTERIOR
270/1	3'-0" X 7'-0"	A	HM/PSG	–	1	(E)	(E)/PSG	–	–	–	R19	E8	EXTERIOR
270/2	3'-0" X 7'-0"	A	HM/PSG	–	1	(E)	(E)/PSG	–	–	–	R19	E8	EXTERIOR
271/1	3'-0" X 7'-0"	A	HM/PSG	–	1	(E)	(E)/PSG	–	–	–	R19	E8	EXTERIOR
271/2	3'-0" X 7'-0"	A	HM/PSG	–	1	(E)	(E)/PSG	–	–	–	R19	E8	EXTERIOR
272/1	3'-0" X 7'-0"	A	HM/PSG	–	1	(E)	(E)/PSG	–	–	–	R19	E8	EXTERIOR
273/1	3'-0" X 7'-0"	A	HM/PSG	–	1	(E)	(E)/PSG	–	–	–	R19	E8	EXTERIOR
273/2	3'-0" X 7'-0"	A	HM/PSG	–	1	(E)	(E)/PSG	–	–	–	R19	E8	EXTERIOR
274/1	3'-0" X 7'-0"	A	HM/PSG	60 MIN.	21	(E)	(E)/PSG	–	–	–	R19	E8, H12	EXTERIOR, PANIC HARDWARE
274/2	3'-0" X 7'-0"	A	HM/PSG	60 MIN.	21	(E)	(E)/PSG	–	–	–	R19	E8, H12	EXTERIOR, PANIC HARDWARE
275/1	3'-0" X 7'-0"	A	HM/PSG	–	1	(E)	(E)/PSG	–	–	–	R19	E8	EXTERIOR
275/2	3'-0" X 7'-0"	A	HM/PSG	–	1	(E)	(E)/PSG	–	–	–	R19	E8	EXTERIOR
~~275/3~~	~~3'-0" X 7'-0"~~	~~C~~	~~SCW/PSG~~	~~60 MIN.~~	~~22~~	~~(E)~~	~~(E)/PSG~~				~~M19~~	~~E8*~~	
276/1	3'-0" X 7'-0"	A	HM/PSG	60 MIN.	23	1	HM/PSG	R16	V16	V16	R19	E8	EXTERIOR, SEE PLAN FOR SWING
276/2	3'-0" X 7'-0"	C	HM/PSG	60 MIN.	24	(E)	(E)/PSG	–	–	–	–	E8*	
277/1	4'-0" X 7'-0"	A	HM/PSG	–	8	(E)	(E)/PSG	–	–	–	R19	E8	EXTERIOR
277/2	PR. 2'-4" X 7'-0"	D	HM/PSG	–	9	(E)	(E)/PSG	–	–	–	R19	E8	EXTERIOR
278/1	PR. 2'-9" X 7'-0"	E	HM/PSG	–	15	(E)	(E)/PSG	–	–	–	–	E8	EXTERIOR
279/1	3'-0" X 7'-0"	A	HM/PSG	–	3	(E)	(E)/PSG	–	–	–	–	E8	EXTERIOR
CLASSROOM BUILDING L													
210/1	3'-0" X 7'-0"	A	HM/PSG	60 MIN.	21	(E)	(E)/PSG	–	–	–	R19	E8, H12	EXTERIOR, PANIC HARDWARE
210/2	3'-0" X 7'-0"	A	HM/PSG	60 MIN.	21	(E)	(E)/PSG	–	–	–	R19	E8, H12	EXTERIOR, PANIC HARDWARE
212/1	3'-0" X 7'-0"	A	HM/PSG	60 MIN.	21	(E)	(E)/PSG	–	–	–	R19	E8, H12	EXTERIOR, PANIC HARDWARE
212/2	3'-0" X 7'-0"	A	HM/PSG	60 MIN.	21	1	HM/PSG	R16	V16	V16	R19	E8, H12	EXTERIOR, PANIC HARDWARE
~~212/3~~	~~3'-0" X 7'-0"~~	~~C~~	~~SCW/PSG~~	~~60 MIN.~~	~~29~~	~~(E)~~	~~(E)/PSG~~					~~E8*~~	
213/1	3'-0" X 7'-0"	C	SCW/PSG	60 MIN.	29	(E)	(E)/PSG	–	–	–	–	E8*	PANIC HARDWARE
213/2	3'-0" X 7'-0"	C	SCW/PSG	60 MIN.	29	(E)	(E)/PSG	–	–	–	–	E8*	PANIC HARDWARE
213/3	3'-0" X 7'-0"	C	SCW/PSG	60 MIN.	29	(E)	(E)/PSG	–	–	–	–	E8*	PANIC HARDWARE
213/4	3'-0" X 7'-0"	C	SCW/PSG	60 MIN.	29	(E)	(E)/PSG	–	–	–	–	E8*	PANIC HARDWARE
213/5	3'-0" X 7'-0"	C	SCW/PSG	60 MIN.	29	(E)	(E)/PSG	–	–	–	–	E8*	PANIC HARDWARE
213/6	3'-0" X 7'-0"	C	SCW/PSG	60 MIN.	29	(E)	(E)/PSG	–	–	–	–	E8*	PANIC HARDWARE
214/1	3'-0" X 7'-0"	A	HM/PSG	60 MIN.	21	(E)	(E)/PSG	–	–	–	R19	E8, H12	EXTERIOR, PANIC HARDWARE
214/2	3'-0" X 7'-0"	A	HM/PSG	60 MIN.	21	(E)	(E)/PSG	–	–	–	R19	E8, H12	EXTERIOR, PANIC HARDWARE
215/1	PR. 3'-0" X 7'-0"	D	HM/PSG	–	9	(E)	(E)/PSG	–	–	–	R19	E8	EXTERIOR
216/1	3'-0" & 4'-0" X 7'-0"	D	HM/PSG	60 MIN.	30	(E)	(E)/PSG	–	–	–	R19	E8, H12	EXTERIOR, PANIC HARDWARE
216/2	3'-0" X 7'-0"	A	HM/PSG	60 MIN.	21	(E)	(E)/PSG	–	–	–	R19	E8, H12	EXTERIOR, PANIC HARDWARE
218/1	3'-0" X 7'-0"	A	HM/PSG	60 MIN.	21	(E)	(E)/PSG	–	–	–	R19	E8, H12	EXTERIOR, PANIC HARDWARE
218/2	3'-0" X 7'-0"	A	HM/PSG	60 MIN.	21	(E)	(E)/PSG	–	–	–	R19	E8, H12	EXTERIOR, PANIC HARDWARE
220/1	3'-0" X 7'-0"	A	HM/PSG	60 MIN.	21	(E)	(E)/PSG	–	–	–	R19	E8, H12	EXTERIOR, PANIC HARDWARE
220/2	3'-0" X 7'-0"	A	HM/PSG	60 MIN.	21	(E)	(E)/PSG	–	–	–	R19	E8, H12	EXTERIOR, PANIC HARDWARE

* TWO ROOM IDENTIFICATION SIGNS AT BOTH SIDES OF THE DOOR

KEYNOTES

KEYNOTES REFERENCE SPECIFICATION SECTIONS BY MEANS OF A FIVE-DIGIT NUMBER IDENTIFYING THE SECTION WHERE A MORE COMPLETE DESCRIPTION OF THE ITEM INDICATED WILL BE FOUND. THE LETTER SUFFIX OF THE KEYNOTE DOES NOT RELATE TO ANY CORRESPONDING REFERENCE LETTER IN THE SPECIFICATION. KEYNOTES DO NOT DESCRIBE CONSTRUCTION MEANS, METHODS, TECHNIQUES, SEQUENCES, OR PROCEDURES. NO TRADE JURISDICTIONAL ALLOCATION OF THIS WORK IS INTENDED BY THE SUBDIVISION OF THESE KEYNOTES. IT SHALL BE THE CONTRACTOR'S SOLE RESPONSIBILITY TO SUBDIVIDE THE WORK IN THE MANNER HE DEEMS NECESSARY.

DOOR SCHEDULE NOTES

DOOR/FRAME
AN – ANODIZED
PSG – PAINT SEMI-GLOSS

ABBREVIATIONS
HM – HOLLOW METAL
SCW – SOLID CORE WOOD
WMG – WIRE MESH GATE
T – TEMPERED GLASS
PH – PANIC HARDWARE
W – WOOD
ALUM – ALUMINUM

GENERAL NOTES
1. FIELD VERIFY EXIST. DOOR & FRAME CONDITIONS PRIOR TO FABRICATION. NOTIFY ARCHITECT IF EXISTING CONDITIONS DO NOT MATCH INFO ON DWGS.
2. ALL NON-EXIT DOORS SHALL HAVE LEVER TYPE HARDWARE.
3. EXIT DOORS SHALL BE OPERABLE FROM THE INSIDE WITHOUT THE USE OF A KEY OR ANY SPECIAL KNOWLEDGE OR FORCE.
4. ALL DOOR GLAZING TO BE 1/4" TEMPERED GLASS, UNLESS NOTED OTHERWISE.
5. THE LETTERS "PR" PRECEDING "DOOR SIZE" IN THE INDICATED SCHEDULE DIMENSIONS A PAIR OF DOORS REFER TO INDIVIDUAL DOOR SIZES BOTH DOOR LEAVES ARE THE SAME SIZE, U.N.O.
6. DOORS SHALL BE 1 3/4" THICK U.N.O. OR SPECIFIED.
7. GLAZING IN ALL FIRE RATED ASSEMBLIES SHALL BE U.L. LISTED 1/4" THICK WIRE GLASS, INSTALLED IN STEEL FRAMES.
8. COORDINATE DOOR SWING WITH FLOOR PLANS.
9. SOFFIT MECHANICAL ACCESS DOORS TO RECEIVE HARDWARE SET # 52.

KEY PLAN

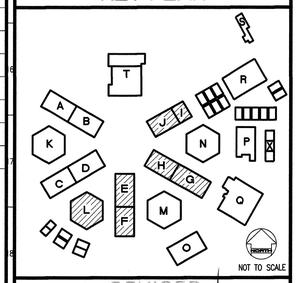

REVISED MAY 1 2 2004

IDENTIFICATION STAMP
DIV. OF THE STATE ARCHITECT
OFFICE OF REGULATION SERVICES
FILE NO. 19-H51
APPL. NO. 03-106434
AC FL FLS NLT SS
DATE

Dougherty ■ Dougherty
Architecture • Planning • Interior Design
2344 D Airport Park Drive
Santa Ana, CA 92705
(714) 427-0277

Copyright © 2002 Dougherty + Dougherty

LICENSED ARCHITECT
BRIAN W. DOUGHERTY
C-26304
STATE OF CALIFORNIA
Architect Seal

Consultant Seal

LA MIRADA HIGH SCHOOL
MODERNIZATION
NORWALK - LA MIRADA UNIFIED SCHOOL DISTRICT
13520 ADELFA DRIVE LA MIRADA, CA 90638

DOOR SCHEDULES
BUILDINGS
E-F, G-H, I-J & L

Date:	04-01-04
Job:	20237.50
Scale:	AS NOTED
Drawn:	
Revisions:	

A014

DOOR SCHEDULE

DOOR NUMBER	DOOR SIZE WIDTH X HEIGHT	DOOR TYPE	DOOR MAT/FIN	LABEL	HARDWARE NO.	FRAME TYPE SHT. A013	FRAME MAT/FIN	DETAILS (SHEET A017 U.N.O.) HEAD	JAMB	JAMB	THRESH	SIGN DETAILS SHT. A502	REMARKS
CLASSROOM BUILDING N													
410/1	PR. 3'-0" X 7'-0"	F	ALUM/AN	–	38	–	ALUM/AN	H16 SIM.	E19	E19	R19	E8/H12	EXTERIOR, PANIC HARDWARE
410/2	3'-0" X 7'-0"	A	HM/PSG	–	1	(E)	(E)/PSG	–	–	–	R19	E8/H12	EXTERIOR, PANIC HARDWARE
410A/1	3'-0" X 7'-0"	C	SCW/PSG	–	37	1	HM/PSG	V4	V4	V4	–	E8	
410A/2	3'-0" X 7'-0"	C	SCW/PSG	–	37	1	HM/PSG	V4	V4	V4	–	E8	
410B/1	3'-0" X 7'-0"	C	SCW/PSG	–	37	1	HM/PSG	V4	V4	V4	–	E8	
410B/2	3'-0" X 7'-0"	C	SCW/PSG	–	37	1	HM/PSG	V4	V4	V4	–	E8	
410C/1	3'-0" X 7'-0"	C	SCW/PSG	–	39	1	HM/PSG	V4	V4	V4	–	E8	
410D/1	3'-0" X 7'-0"	C	SCW/PSG	–	36	(E)	(E)/PSG	–	–	–	–	E8	
412/1	3'-0" X 7'-0"	A	SCW/PSG	–	39	1	HM/PSG	V4	V4	V4	–	E8	
414/1	3'-0" X 7'-0"	A	HM/PSG	–	7	1	HM/PSG	R16	V16	V16	R19	E8/H12	EXTERIOR
414/2	3'-0" X 7'-0"	A	HM/PSG	–	7	1	HM/PSG	R16	V16	V16	R19	E8/H12	EXTERIOR
415/1	3'-0" X 7'-0"	A	HM/PSG	–	16	1	HM/PSG	V12	V16	V16	R19	E8/H12	EXTERIOR, SEE PLAN FOR SWING, PH
415/2	5'-0" X 10'-0"	*	*	–	–	*	*	M8	M12	M12	–	E8	* SEE ROLL DOWN DOOR – A017
416/1	3'-0" X 7'-0"	A	SCW/PSG	–	37	1	HM/PSG	R12	R12	R12	–	E8	SEE PLAN FOR SWING
417/1	3'-0" X 7'-0"	A	SCW/PSG	–	43	1	HM/PSG	V4	V4	V4	H19	A19, E19	
418/1	PR. 3'-0" X 7'-0"	D	HM/PSG	–	33	(E)	(E)/PSG	–	–	–	R19	E8	EXTERIOR
418/2	3'-0" X 7'-0"	A	HM/PSG	–	2	(E)	(E)/PSG	–	–	–	R19	E8	EXTERIOR
418A/1	3'-0" X 7'-0"	C	SCW/PSG	–	39	1	HM/PSG	V4	V4	V4	H19	E8	
419/1	3'-0" X 7'-0"	A	SCW/PSG	–	27	(E)	(E)/PSG	–	–	–	–	E8	
420/1	3'-0" X 7'-0"	A	HM/PSG	–	2	(E)	(E)/PSG	–	–	–	R19	E8	EXTERIOR
421/1	3'-0" X 7'-0"	A	HM/PSG	–	3	(E)	(E)/PSG	–	–	–	–	E8	EXTERIOR
422/1	3'-0" X 7'-0"	A	SCW/PSG	–	39	1	HM/PSG	V4	V4	V4	H19	E8	
CLASSROOM BUILDING R													
760/1	3'-0" X 7'-0"	A	HM/PSG	–	44	(E)	(E)/PSG	–	–	–	R19	E8	EXTERIOR, PANIC HARDWARE
760/2	PR. 3'-0",2'-0" X 7'-0"	D	HM/PSG	–	45	(E)	(E)/PSG	–	–	–	R19	E8	EXTERIOR, PANIC HARDWARE
760A/1	3'-0" X 7'-0"	C	SCW/PSG	–	39	1	HM/PSG					E8	
760B/1	3'-0" X 7'-0"	C	SCW/PSG	–	27	(E)	(E)/PSG	–	–	–	–	E8	
760C/1	3'-0" X 7'-0"	C1	SCW/PSG	60 MIN.	65	1	HM/PSG	V4	V4	V4	–	E8	
760C/2	3'-0" X 7'-0"	C1	SCW/PSG	60 MIN.	29	(E)	(E)/PSG	–	–	–	–	E8	
760E/1	PR. 3'-0" X 7'-0"	B	HM/PSG	–	15	(E)	(E)/PSG	–	–	–	–	E8	EXTERIOR
760E/2	3'-0" X 7'-0"	C	SCW/PSG	60 MIN.	29	(E)	(E)/PSG	–	–	–	–	E8	
761/1	3'-0" X 7'-0"	A	HM/PSG	–	11	1	HM/PSG	R16	V12	V8	V19	A12, E12	EXTERIOR
762/1	3'-0" X 7'-0"	A	HM/PSG	–	12	1	HM/PSG	R16	V12	V8	V19	A16, E16	EXTERIOR
763/1	3'-0" X 7'-0"	A	HM/PSG	–	44	(E)	(E)/PSG	–	–	–	R19	E8	EXTERIOR, PANIC HARDWARE
763/2	3'-0" X 7'-0"	A	HM/PSG	–	44	(E)	(E)/PSG	–	–	–	R19	E8	EXTERIOR, PANIC HARDWARE
763/3	3'-0" X 7'-0"	A	HM/PSG	–	44	(E)	(E)/PSG	–	–	–	R19	E8	EXTERIOR, PANIC HARDWARE
763/4	3'-0" X 7'-0"	A	HM/PSG	–	44	(E)	(E)/PSG	–	–	–	R19	E8	EXTERIOR, PANIC HARDWARE
763A/1	3'-0" X 7'-0"	C1	SCW/PSG	60 MIN.	66	1	HM/PSG	R12	R12	R12	–	E8	
763C/1	3'-0" X 7'-0"	C1	SCW/PSG	60 MIN.	65	1	HM/PSG	R12	R12	R12	H19	E8*	
763C/2	3'-0" X 7'-0"	C1	SCW/PSG	60 MIN.	29	1	HM/PSG	R12	R12	R12	H19	E8*	
763E/1	3'-0" X 7'-0"	C1	SCW/PSG	60 MIN.	29	(E)	(E)/PSG	–	–	–	–	E8	
771/1	3'-0" X 7'-0"	(E)	(E)/PSG	–	41	(E)	(E)/PSG	–	–	–	R19	E8/H12	EXTERIOR, PANIC HARDWARE
771/2	3'-0" X 7'-0"	A	HM/PSG	–	1	(E)	(E)/PSG	–	–	–	–	E8/H12	EXTERIOR
771B/1	3'-0" X 7'-0"	C	SCW/PSG	–	36	(E)	(E)/PSG	–	–	–	–	E8	
771C/1	3'-0" X 7'-0"	C	SCW/PSG	–	39	1	HM/PSG	R12	R12	R12	–	E8	
771D/1	3'-0" X 7'-0"	C	SCW/PSG	–	37	1	HM/PSG	R12	R12	R12	–	E8	
771E/1	PR. 2'-0" X 7'-0"	D	SCW/PSG	–	47	(E)	(E)/PSG	–	–	–	–	E8	
772/1	3'-0" X 7'-0"	(E)	(E)/PSG	–	41	(E)	(E)/PSG	–	–	–	R19	E8/H12	EXTERIOR, PANIC HARDWARE
772/2	3'-0" X 7'-0"	A	HM/PSG	–	44	(E)	(E)/PSG	–	–	–	R19	E8/H12	EXTERIOR, PANIC HARDWARE
772B/1	3'-0" X 7'-0"	C	SCW/PSG	–	36	(E)	(E)/PSG	–	–	–	–	E8	
773/1	3'-0" X 7'-0"	A	HM/PSG	–	3	(E)	(E)/PSG	–	–	–	–	E8	EXTERIOR
774/1	2'-6" X 7'-0"	A	HM/PSG	–	3	(E)	(E)/PSG	–	–	–	–	E8	EXTERIOR
776/1	PR. 3'-0" X 7'-0"	B	HM/PSG	–	15	(E)	(E)/PSG	–	–	–	–	E8	EXTERIOR

* TWO ROOM IDENTIFICATION SIGNS AT BOTH SIDES OF THE DOOR

DOOR SCHEDULE

DOOR NUMBER	DOOR SIZE WIDTH X HEIGHT	DOOR TYPE	DOOR MAT/FIN	LABEL	HARDWARE NO.	FRAME TYPE SHT. A013	FRAME MAT/FIN	DETAILS (SHEET A017 U.N.O.) HEAD	JAMB	JAMB	THRESH	SIGN DETAILS SHT. A502	REMARKS
CLASSROOM BUILDING M													
310/1	3'-0" & 4'-0" X 7'-0"	A	HM/PSG	–	31	(E)	(E)/PSG	–	–	–	R19	E8/H12	EXTERIOR, PANIC HARDWARE
310/2	3'-0" X 7'-0"	A	HM/PSG	–	1	(E)	(E)/PSG	–	–	–	R19	E8/H12	EXTERIOR, PANIC HARDWARE
310/3	3'-0" X 7'-0"	C	SCW/PSG	–	32	1	HM/PSG	R12	R12	R12	–	E8*	SEE PLAN FOR SWING
310/4	PR. 3'-0" X 7'-0"	C	HM/PSG	–	4	3	HM/PSG	M16 SIM.	M16	M16	R19	E8*	EXTERIOR, SEE PLAN FOR SWING
310A/1	3'-0" X 7'-0"	C	SCW/PSG	–	20	1	HM/PSG	R12	R12	R12	–	E8	SEE PLAN FOR SWING
311/1	3'-0" X 7'-0"	A	HM/PSG	–	8	(E)	(E)/PSG	–	–	–	R19	E8	EXTERIOR
312/1	3'-0" X 7'-0"	A	HM/PSG	–	7	1	HM/PSG	R16	V16	V16	R19	E8, H12	EXTERIOR, SEE PLAN FOR SWING, PH
312/2	3'-0" X 7'-0"	A	HM/PSG	–	1	(E)	(E)/PSG	–	–	–	R19	E8, H12	EXTERIOR, PANIC HARDWARE
312/3	3'-0" X 7'-0"	C	SCW/PSG	–	13	(E)	(E)/PSG	–	–	–	–	E8*	
312/4	3'-0" X 7'-0"	C	HM/PSG	–	7	4	HM/PSG	M16 SIM.	M16	M16	R19	E8*	EXTERIOR, SEE PLAN FOR SWING
313/1	3'-0" X 7'-0"	A	HM/PSG	–	6	1	HM/PSG	R12	R12	R12	M19	E8	
314/1	3'-0" X 7'-0"	A	HM/PSG	–	1	(E)	(E)/PSG	–	–	–	R19	E8, H12	EXTERIOR, PANIC HARDWARE
314/2	3'-0" X 7'-0"	A	HM/PSG	–	1	(E)	(E)/PSG	–	–	–	R19	E8, H12	EXTERIOR, PANIC HARDWARE
314/3	3'-0" X 7'-0"	C	SCW/PSG	–	5	(E)	(E)/PSG	–	–	–	–	E8*	
314/4	3'-0" X 7'-0"	C	HM/PSG	–	7	4	HM/PSG	M16 SIM.	M16	M16	R19	E8*	EXTERIOR, SEE PLAN FOR SWING
316/1	3'-0" X 7'-0"	A	HM/PSG	–	1	(E)	(E)/PSG	–	–	–	R19	E8/H12	EXTERIOR, PANIC HARDWARE
316/2	3'-0" X 7'-0"	A	HM/PSG	–	1	(E)	(E)/PSG	–	–	–	R19	E8/H12	EXTERIOR, PANIC HARDWARE
316/3	3'-0" X 7'-0"	C	SCW/PSG	–	5	(E)	(E)/PSG	–	–	–	–	E8*	
316/4	3'-0" X 7'-0"	C	HM/PSG	–	7	4	HM/PSG	M16 SIM.	M16	M16	R19	E8*	EXTERIOR, SEE PLAN FOR SWING
316A/1	3'-0" X 7'-0"	A	HM/PSG	–	36	(E)	(E)/PSG	–	–	–	–	E8	
318/1	3'-0" X 7'-0"	A	HM/PSG	–	1	(E)	(E)/PSG	–	–	–	R19	E8/H12	EXTERIOR, PANIC HARDWARE
318/2	3'-0" X 7'-0"	A	HM/PSG	–	1	(E)	(E)/PSG	–	–	–	R19	E8/H12	EXTERIOR, PANIC HARDWARE
318/3	PR. 3'-0" X 7'-0"	C	HM/PSG	–	4	3	HM/PSG	M16 SIM.	M16	M16	R19	E8*	EXTERIOR, SEE PLAN FOR SWING
318A/1	3'-0" X 7'-0"	C	SCW/PSG	–	37	1	HM/PSG	V4	V4	V4	–	E8	
320/1	3'-0" X 7'-0"	A	HM/PSG	–	7	1	HM/PSG	R16	V16	V16	R19	E8	EXTERIOR, SEE PLAN FOR SWING, PH
320/2	3'-0" X 7'-0"	C	SCW/PSG	–	5	(E)	(E)/PSG	–	–	–	–	E8*	
320/3	PR. 3'-0" X 7'-0"	C	HM/PSG	–	4	3	HM/PSG	M16 SIM.	M16	M16	R19	E8*	EXTERIOR, SEE PLAN FOR SWING
321/1	3'-0" X 7'-0"	A	HM/PSG	–	7	1	HM/PSG	R16	V16	V16	R19	E8*	EXTERIOR, SEE PLAN FOR SWING
321/2	3'-0" X 7'-0"	C	SCW/PSG	–	37	1	HM/PSG	R12	R12	R12	–	E8	
322/1	3'-0" X 7'-0"	C	SCW/PSG	–	36	1	HM/PSG	R12	R12	R12	–	E8*	
322/2	3'-0" X 7'-0"	C	SCW/PSG	–	37	1	HM/PSG	R12	R12	R12	–	E8*	

* TWO ROOM IDENTIFICATION SIGNS AT BOTH SIDES OF THE DOOR

WINDOW TYPE	ROUGH OPENING WIDTH X HEIGHT	FRAME MAT/FIN	GLAZING	DETAILS (SHEET A015 U.N.O.) HEAD	JAMB	JAMB	SILL	REMARKS
STOREFRONT								
AA	SEE FRAME TYPE	ALUM/KYNAR	1/4" OBSCURE/CLEAR	H16	H16	E19	H19	

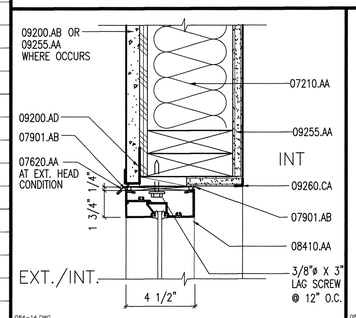

STOREFRONT JAMB (HEAD SIM.) H16 3" = 1'-0"

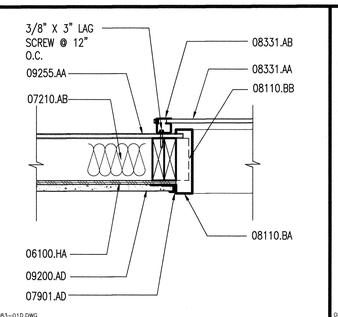

COILING DOOR JAMB E16 1 1/2" = 1'-0"

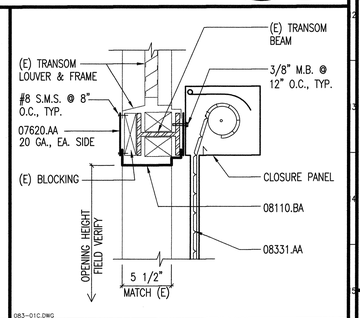

COILING DOOR HEAD A16 1 1/2" = 1'-0"

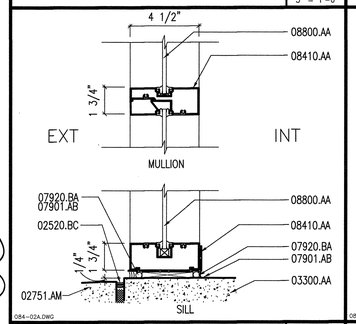

STOREFRONT SILL & MULLION H19 3" = 1'-0"

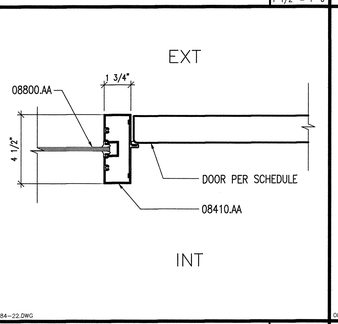

STOREFRONT DOOR/WINDOW JAMB E19 3" = 1'-0"

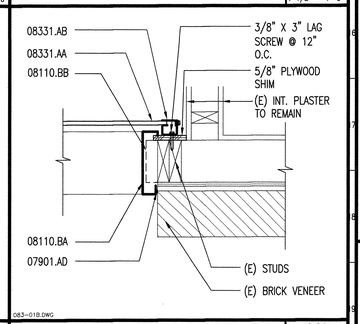

COILING DOOR JAMB A19 1 1/2" = 1'-0"

KEYNOTES

KEYNOTES REFERENCE SPECIFICATION SECTIONS BY MEANS OF A FIVE-DIGIT NUMBER IDENTIFYING THE SECTION WHERE A MORE COMPLETE DESCRIPTION OF THE ITEM INDICATED WILL BE FOUND. THE LETTER SUFFIX OF THE KEYNOTE DOES NOT RELATE TO ANY CORRESPONDING REFERENCE LETTER IN THE SPECIFICATION. KEYNOTES DO NOT DESCRIBE CONSTRUCTION MEANS, METHODS, TECHNIQUES, SEQUENCES, OR PROCEDURES. NO TRADE JURISDICTIONAL ALLOCATION OF THIS WORK IS INTENDED BY THE SUBDIVISION OF THESE KEYNOTES. IT SHALL BE THE CONTRACTOR'S SOLE RESPONSIBILITY TO SUBDIVIDE THE WORK IN THE MANNER HE DEEMS NECESSARY.

DIVISION 2 – SITEWORK

02520.BC EXPANSION JOINT FILLER
02751.AM EXISTING CONCRETE PAVING

DIVISION 3 – CONCRETE

03300.AA CONCRETE SLAB – SEE STRUCTURAL

DIVISION 6 – WOOD & PLASTICS

06100.HA PLYWOOD SHEATHING

DIVISION 7 – THERMAL & MOISTURE PROTECTION

07210.AA R-11 (3-1/2") THERMAL INSULATION
07210.AB R-19 (6-1/4") THERMAL INSULATION
07620.AA GALVANIZED SHEET METAL FLASHING
07901.AB SEALANT
07901.AD SEALANT W/ BACKER ROD
07920.BA BACKER ROD

DIVISION 8 – DOORS & WINDOWS

08110.BA HOLLOW METAL FRAME
08110.BB HOLLOW METAL FRAME ANCHOR
08331.AA OVERHEAD COILING DOOR
08331.AB OVERHEAD DOOR TRACK
08410.AA ALUMINUM STOREFRONT
08800.AA GLAZING AS SCHEDULED

DIVISION 9 – FINISHES

09200.AB EXTERIOR PLASTER
09200.AD METAL CASING BEAD
09255.AA 5/8" TYPE "X" GYPSUM BOARD
09260.CA CORNER BEAD

DOOR SCHEDULE NOTES

DOOR/FRAME
AN – ANODIZED
PSG – PAINT SEMI-GLOSS

ABBREVIATIONS
HM – HOLLOW METAL
SCW – SOLID CORE WOOD
WMG – WIRE MESH GATE
T – TEMPERED GLASS
PH – PANIC HARDWARE
W – WOOD
ALUM – ALUMINUM

GENERAL NOTES

1. FIELD VERIFY EXIST. DOOR & FRAME CONDITIONS PRIOR TO FABRICATION. NOTIFY ARCHITECT IF EXISTING CONDITIONS DO NOT MATCH INFO ON DWGS.
2. ALL NON-EXIT DOORS SHALL HAVE LEVER TYPE HARDWARE.
3. EXIT DOORS SHALL BE OPERABLE FROM THE INSIDE WITHOUT THE USE OF A KEY OR ANY SPECIAL KNOWLEDGE OR FORCE.
4. ALL DOOR GLAZING TO BE 1/4" TEMPERED GLASS, UNLESS NOTED OTHERWISE.
5. THE LETTERS "PR" PRECEDING "DOOR SIZE" IN THE INDICATED SCHEDULE DIMENSIONS A PAIR OF DOORS REFER TO INDIVIDUAL DOOR SIZES BOTH DOOR LEAVES ARE THE SAME SIZE, U.N.O.
6. DOORS SHALL BE 1 3/4" THICK U.N.O. OR SPECIFIED.
7. GLAZING IN ALL FIRE RATED ASSEMBLIES SHALL BE U.L. LISTED 1/4" THICK WIRE GLASS, INSTALLED IN STEEL FRAMES.
8. COORDINATE DOOR SWING WITH FLOOR PLANS.
9. SOFFIT MECHANICAL ACCESS DOORS TO RECEIVE HARDWARE SET # 52.

KEY PLAN

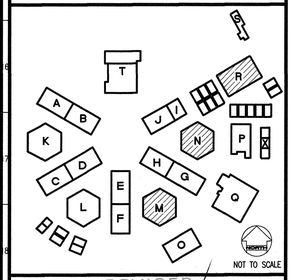

REVISED MAY 1 2 2004

IDENTIFICATION STAMP
DIV. OF THE STATE ARCHITECT
OFFICE OF REGULATION SERVICES
FILE NO. 19-H51
APPL. NO. 03-106434
AC. FLS. SS.
DATE

Dougherty + Dougherty
Architecture • Planning • Interior Design
3194-D Airport Loop Drive
Costa Mesa, CA 92626
(714) 427-0277

Copyright © 2002 Dougherty + Dougherty

Architect Seal

Consultant Seal

LA MIRADA HIGH SCHOOL
MODERNIZATION
NORWALK - LA MIRADA UNIFIED SCHOOL DISTRICT
13520 ADELFA DRIVE LA MIRADA, CA 90638

DOOR SCHEDULE
BUILDINGS
M, N, & R

Date:	04-01-04
Job:	20237.50
Scale:	AS NOTED
Drawn:	
Revisions:	
1	12-01-03

A015

DOOR SCHEDULE

DOOR NUMBER	DOOR SIZE WIDTH X HEIGHT	DOOR TYPE	DOOR MAT/FIN	LABEL	HARDWARE NO.	FRAME TYPE SHT. A013	FRAME MAT/FIN	DETAILS (SHEET A017 U.N.O.) HEAD	JAMB	JAMB	THRESH	SIGN DETAILS SHT. A502	REMARKS
BOYS LOCKER BUILDING P													
601/1	(E)	(E)	(E)	–	–	(E)	(E)	–	–	–	–	E8	–
603/1	(E)	(E)	(E)	–	–	(E)	(E)	–	–	–	–	E8	–
604/1	3'-0" X 7'-0"	B	HM/PSG	–	59	(E)	(E) PSG	–	–	–	R19	E8	EXTERIOR
604/2	(E)	(E)	(E)	–	–	(E)	(E)	–	–	–	–	E8	–
605/1	(E)	(E)	(E)	–	–	(E)	(E)	–	–	–	–	E8	–
606/1	(E)	(E)	(E)	–	–	(E)	(E)	–	–	–	–	E8	–
609/1	PR 3'-0",2'-0"X7'-0"	D	HM/PSG	–	45	(E)	(E) PSG	–	–	–	R19	E8, H8, H12	EXTERIOR, PANIC HARDWARE
609/2	PR 3'-0",2'-0"X7'-0"	D	HM/PSG	–	45	(E)	(E) PSG	–	–	–	R19	E8, H8, H12	EXTERIOR, PANIC HARDWARE
610/1	3'-0" X 7'-0"	A	HM/PSG	–	8	(E)	(E) PSG	–	–	–	R19	E8	EXTERIOR
611/1	3'-0" X 7'-0"	A	HM/PSG	–	2	(E)	(E) PSG	–	–	–	R19	E8	EXTERIOR
611/2	(E)	(E)	(E)	–	–	(E)	(E)	–	–	–	–	E8	–
612/1	(E)	(E)	(E)	–	–	(E)	(E)	–	–	–	–	E8	–
613/1	3'-0" X 7'-0"	A	SCW/PSG	–	58	1	HM/PSG	V8	V8	V8	H19	A12, A16	UNDERCUT
615/1	PR 3'-6" X 7'-0"	B	HM/PSG	–	9	(E)	(E) PSG	–	–	–	R19	E8	EXTERIOR
GYMNASIUM BUILDING Q													
633/1	3'-0" X 7'-0"	A	SCW/PSG	60 MIN.	62	1	HM/PSG	V8	V8	V8	E19	E12, E16	UNDERCUT
634/1	3'-0" X 7'-0"	A	SCW/PSG	60 MIN.	62	1	HM/PSG	V8	V8	V8	E19	A12, A16	UNDERCUT
635/1	PR 3'-0" X 7'-0"	A	HM/PSG	–	33	(E)	(E) PSG	–	–	–	–	E8, H8, H12	EXTERIOR, PANIC HARDWARE
635/2	PR 3'-0" X 7'-0"	A	HM/PSG	–	33	(E)	(E) PSG	–	–	–	–	E8, H8, H12	EXTERIOR, PANIC HARDWARE
636/1	PR 3'-0" X 7'-0"	B	HM/PSG	–	9	(E)	(E) PSG	–	–	–	R19	E8	–
637/1	3'-0" X 7'-0"	B	SCW/PSG	–	60	1	HM/PSG	R12	R12	R12	–	E8	–
638/1	PR 3'-0" X 7'-0"	A	HM/PSG	–	33	(E)	(E) PSG	–	–	–	R19	E8, V4	EXTERIOR, PANIC HARDWARE
638/2	(E)	(E)	(E)	–	–	(E)	(E)	–	–	–	–	E8	–
639/1	(E)	(E)	(E)	–	–	(E)	(E)	–	–	–	–	E8,	–
639/2	(E)	(E)	(E)	–	–	(E)	(E)	–	–	–	–	E8	–
640/1	PR 3'-0" X 7'-0"	A	HM/PSG	–	33	(E)	(E) PSG	–	–	–	R19	E8, H8, H12	EXTERIOR, PANIC HARDWARE
640/2	PR 3'-0" X 7'-0"	A	HM/PSG	–	33	(E)	(E) PSG	–	–	–	R19	E8, H8, H12	EXTERIOR, PANIC HARDWARE
640/3	PR 3'-0" X 7'-0"	A	HM/PSG	–	51	(E)	(E) PSG	–	–	–	R19	E8, H8, H12	EXTERIOR, PANIC HARDWARE
640/4	PR 3'-0" X 7'-0"	A	HM/PSG	–	51	(E)	(E) PSG	–	–	–	R19	E8, H8, H12	EXTERIOR, PANIC HARDWARE
MULTI-PURPOSE/CLASSROOM BUILDING T													
520/1	PR. 3'-0" X 7'-0"	D	HM/PSG	–	48	(E)	(E)/PSG	–	–	–	R19	E8, H12	EXTERIOR, PANIC HARDWARE
520/2	3'-0" X 7'-0"	A	HM/PSG	–	44	(E)	(E)/PSG	–	–	–	R19	E8, H12	EXTERIOR, PANIC HARDWARE
520/3	3'-0" X 7'-0"	A	SCW/PSG	90 MIN.	49	(E)	(E)/PSG	–	–	–	M19	E8*	PANIC HARDWARE
520A/1	3'-0" X 7'-0"	(E)	(E)/PSG	–	50	(E)	(E)/PSG	–	–	–	–	E8	–
520B/1	3'-0" X 7'-0"	(E)	(E)/PSG	–	50	(E)	(E)/PSG	–	–	–	–	E8	–
520C/1	3'-0" X 7'-0"	(E)	(E)/PSG	–	50	(E)	(E)/PSG	–	–	–	–	E8	–
521/1	PR 3'-0",2'-0"X7'-0"	D	SCW/PSG	–	61	(E)	(E) PSG	–	–	–	R19	E8*, V8	PANIC HARDWARE
521/2	PR 3'-0" X 7'-0"	D	HM/PSG	–	53	(E)	(E) PSG	–	–	–	R19	E8, H8, H12	EXTERIOR, PANIC HARDWARE
521/3	PR 3'-0" X 7'-0"	D	HM/PSG	–	53	(E)	(E) PSG	–	–	–	R19	E8, H8, H12	EXTERIOR, PANIC HARDWARE
521/4	PR 3'-0" X 7'-0"	D	SCW/PSG	60 MIN.	42	(E)	(E) PSG	–	–	–	–	E8*	PANIC HARDWARE
521/5	PR 3'-0" X 7'-0"	D	SCW/PSG	60 MIN.	46	(E)	(E) PSG	–	–	–	–	E8*, V8	PANIC HARDWARE
521A/1	PR 3'-0",2'-0"X7'-0"	A	HM/PSG	–	48	(E)	(E) PSG	–	–	–	R19	E8, H8, H12	EXTERIOR, PANIC HARDWARE
521B/1	PR 3'-0" X 7'-0"	D	HM/PSG	–	53	(E)	(E) PSG	–	–	–	R19	E8	EXTERIOR, PANIC HARDWARE
521B/2	(E)	(E)	(E)	–	–	(E)	(E)	–	–	–	–	E8	–
521C/1	PR 3'-0" X 7'-0"	D	HM/PSG	–	33	(E)	(E) PSG	–	–	–	R19	E8	EXTERIOR, PANIC HARDWARE
521C/2	(E)	(E)	(E)	–	–	(E)	(E)	–	–	–	–	E8	–
522/1	PR 3'-0" X 7'-0"	D	HM/PSG	–	48	(E)	(E) PSG	–	–	–	R19	E8, V4	EXTERIOR, PANIC HARDWARE
523/1	3'-0" X 7'-0"	A	SCW/PSG	–	39	1	HM/PSG	V4	R12	R12	–	E8*	–
523/2	3'-0" X 7'-0"	A	SCW/PSG	–	39	1	HM/PSG	V4	R12	R12	–	E8*	–
524/1	PR. 3'-0" X 7'-0"	D	HM/PSG	–	48	(E)	(E)/PSG	–	–	–	R19	E8, H12	EXTERIOR
524/2	3'-0" X 7'-0"	C	SCW/PSG	–	17	1	HM/PSG	V4	V4	V4	–	E8*	–
525/1	PR. 4'-0" X 7'-0"	D	HM/PSG	–	15	(E)	(E)/PSG	–	–	–	–	E8	EXTERIOR
526/1	3'-0" X 7'-0"	A	HM/PSG	–	44	(E)	(E)/PSG	–	–	–	R19	E8, H12	EXTERIOR
527/1	3'-0" X 7'-0"	A	HM/PSG	–	2	(E)	(E) PSG	–	–	–	R19	E8	EXTERIOR, PANIC HARDWARE
527/2	(E)	(E)	(E)	–	–	(E)	(E)	–	–	–	–	E8	–
527/3	(E)	(E)	(E)	–	–	(E)	(E)	–	–	–	–	E8	–
527A/1	3'-0" X 7'-0"	A	HM/PSG	–	2	(E)	(E) PSG	–	–	–	R19	E8	EXTERIOR, PANIC HARDWARE
527B/1	(E)	(E)	(E)	–	–	(E)	(E)	–	–	–	–	E8	–
527B/2	(E)	(E)	(E)	–	–	(E)	(E)	–	–	–	–	E8	–
527F/1	3'-0" X 7'-0"	A	HM/PSG	–	2	(E)	(E) PSG	–	–	–	R19	E8	EXTERIOR, PANIC HARDWARE
527F/2	(E)	(E)	(E)	–	–	(E)	(E)	–	–	–	–	E8	–
530/1	PR 3'-0",2'-0"X7'-0"	E	HM/PSG	–	9	(E)	(E) PSG	–	–	–	R19	E8	–
530/2	PR 3'-0",2'-0"X7'-0"	E	HM/PSG	–	9	(E)	(E) PSG	–	–	–	R19	E8	–
530/3	(E)	(E)	(E)	–	–	(E)	(E)	–	–	–	–	E8	–
531/1	3'-0" X 7'-0"	B	HM/PSG	–	8	(E)	(E) PSG	–	–	–	R19	E8	–
532/1	3'-0" X 7'-0"	G	HM/PSG	–	2	(E)	(E) PSG	–	–	–	R19	E8	EXTERIOR, PANIC HARDWARE
532/2	(E)	(E)	(E)	–	–	(E)	(E)	–	–	–	–	E8	–
533/1	3'-0" X 7'-0"	A	HM/PSG	–	62	1	HM/PSG	V8	V8	V8	E19	A16, E16	UNDERCUT
534/1	3'-0" X 7'-0"	A	HM/PSG	–	62	1	HM/PSG	V8	V8	V8	E19	A12, E12	UNDERCUT

DOOR SCHEDULE

DOOR NUMBER	DOOR SIZE WIDTH X HEIGHT	DOOR TYPE	DOOR MAT/FIN	LABEL	HARDWARE NO.	FRAME TYPE SHT. A013	FRAME MAT/FIN	DETAILS (SHEET A017 U.N.O.) HEAD	JAMB	JAMB	THRESH	SIGN DETAILS SHT. A502	REMARKS
ADMINISTRATION BUILDING K													
801/1	(E)	(E)	(E)	–	–	(E)	(E)	–	–	–	–	E8	–
801/2	(E)	(E)	(E)	–	–	(E)	(E)	–	–	–	–	E8	–
804/1	(E)	(E)	(E)	–	–	(E)	(E)	–	–	–	–	E8	–
806/1	(E)	(E)	(E)	–	–	(E)	(E)	–	–	–	–	E8	–
807/1	(E)	(E)	(E)	–	–	(E)	(E)	–	–	–	–	E8	–
808/1	(E)	(E)	(E)	–	–	(E)	(E)	–	–	–	–	E8	–
809/1	(E)	(E)	(E)	–	–	(E)	(E)	–	–	–	–	E8	–
810/1	(E)	(E)	(E)	–	–	(E)	(E)	–	–	–	–	E8	–
811/1	(E)	(E)	(E)	–	–	(E)	(E)	–	–	–	–	E8	–
812/1	(E)	(E)	(E)	–	–	(E)	(E)	–	–	–	–	E8	–
814/1	PR 3'-0" X 7'-0"	A	HM/PSG	–	53	(E)	(E) PSG	–	–	–	R19	E8, H12	EXTERIOR, PANIC HARDWARE
815/1	(E)	(E)	(E)	–	–	(E)	(E)	–	–	–	–	E8	–
816/1	(E)	(E)	(E)	–	–	(E)	(E)	–	–	–	–	E8	–
816/2	(E)	(E)	(E)	–	–	(E)	(E)	–	–	–	–	E8	–
817/1	(E)	(E)	(E)	–	–	(E)	(E)	–	–	–	–	E8	–
817/2	(E)	(E)	(E)	–	–	(E)	(E)	–	–	–	–	E8	–
819/1	(E)	(E)	(E)	–	–	(E)	(E)	–	–	–	–	E8	–
820/1	(E)	(E)	(E)	–	–	(E)	(E)	–	–	–	–	E8	–
822/1	PR 3'-0" X 7'-0"	A	HM/PSG	–	53	(E)	(E) PSG	–	–	–	R19	E8, H12	EXTERIOR, PANIC HARDWARE
822/2	3'-0" X 7'-0"	A	HM/PSG	–	2	(E)	(E) PSG	–	–	–	R19	E8	EXTERIOR, PANIC HARDWARE
823/1	(E)	(E)	(E)	–	–	(E)	(E)	–	–	–	–	E8	–
823/2	(E)	(E)	(E)	–	–	(E)	(E)	–	–	–	–	E8	–
824/1	(E)	(E)	(E)	–	–	(E)	(E)	–	–	–	–	E8	–
824/2	(E)	(E)	(E)	–	–	(E)	(E)	–	–	–	–	E8	–
825/1	(E)	(E)	(E)	–	–	(E)	(E)	–	–	–	–	E8	–
826/1	3'-0" X 7'-0"	A	HM/PSG	–	2	(E)	(E) PSG	–	–	–	R19	E8	EXTERIOR, P.H.
826/2	(E)	(E)	(E)	–	–	(E)	(E)	R12	R12	R12	–	E8	–, P.H.
826/3	(E)	(E)	(E)	–	–	(E)	(E)	–	–	–	–	E8	–
830/1	(E)	(E)	(E)	–	–	(E)	(E)	–	–	–	–	E8	–
831/1	(E)	(E)	(E)	–	–	(E)	(E)	–	–	–	–	E8	–
832/1	3'-0" X 7'-0"	B	HM/PSG	–	34	1	HM/PSG	V12	V16	V16	R19	E8	EXTERIOR
833/1	3'-0" X 7'-0"	B	HM/PSG	–	12	1	HM/PSG	V12	V12	V16	V19	A12, E12	EXTERIOR
834/1	3'-0" X 7'-0"	E	HM/PSG	–	34	1	HM/PSG	V12 (SIM)	V16 (SIM)	V16 (SIM)	–	E8	EXTERIOR
834/2	10'-0" X 7'-0"	E	HM/PSG	–	35	–	HM/PSG	A16/A015	A19/A015	E16/A015	–	E8	ROLL UP DOOR
835/1	(E)	(E)	(E)	–	–	(E)	(E)	–	–	–	H19	V8	PANIC HARDWARE
835/2	3'-0" X 7'-0"	A	HM/PSG	–	2	(E)	(E) PSG	–	–	–	R19	E8, H12	EXTERIOR, PANIC HARDWARE
836/1	(E)	(E)	(E)	–	–	(E)	(E)	–	–	–	–	E8	–
837/1	(E)	(E)	(E)	–	–	(E)	(E)	R12	R12	R12	–	E8	DUTCH DOOR
838/1	3'-0" X 7'-0"	B	HM/PSG	–	28	1	HM/PSG	V12	V12	V16	V19	A16, E16	EXTERIOR
839/1	(E)	(E)	(E)	–	–	(E)	(E)	–	–	–	–	E8	–
841/1	PR 3'-0" X 7'-0"	A	HM/PSG	–	53	(E)	(E) PSG	–	–	–	R19	E8, V12	EXTERIOR, PANIC HARDWARE
842/1	(E)	(E)	(E)	–	–	(E)	(E)	–	–	–	–	E8	–
842/2	(E)	(E)	(E)	–	–	(E)	(E)	–	–	–	–	E8	–
GIRLS LOCKER BUILDING O													
621/1	3'-0" X 7'-0"	C	HM/PSG	–	14	1	HM/PSG	V12	V12	V12	R19	E8, H12	EXTERIOR, PANIC HARDWARE
621/2	3'-0" X 7'-0"	C	HM/PSG	–	14	1	HM/PSG	V12	V12	V12	R19	E8, H12	EXTERIOR, PANIC HARDWARE
623/1	PR 3'-6" X 7'-0"	B	HM/PSG	–	9	(E)	(E) PSG	–	–	–	R19	E8	EXTERIOR
624/1	3'-0" X 7'-0"	B	HM/PSG	–	8	(E)	(E) PSG	–	–	–	R19	E8	EXTERIOR
625/1	PR 3'-0" X 7'-0"	D	HM/PSG	–	53	(E)	(E) PSG	–	–	–	R19	E8, H8, H12	EXTERIOR, PANIC HARDWARE
625/2	PR 3'-0" X 7'-0"	D	HM/PSG	–	53	(E)	(E) PSG	–	–	–	R19	E8, H8, H12	EXTERIOR, PANIC HARDWARE
625/3	3'-0" X 7'-0"	A	HM/PSG	–	44	(E)	(E) PSG	–	–	–	R19	E8, H8, H12	EXTERIOR, PANIC HARDWARE
625/4	3'-0" X 7'-0"	A	HM/PSG	–	44	(E)	(E) PSG	–	–	–	R19	E8, H8, H12	EXTERIOR, PANIC HARDWARE
627/1	(E)	(E)	(E)	–	–	(E)	(E)	–	–	–	–	E8	–
628/1	(E)	(E)	(E)	–	–	(E)	(E)	–	–	–	–	E8	–
630/1	(E)	(E)	(E)	–	–	(E)	(E)				–	E8	–
630/2	(E)	(E)	(E)	–	–	(E)	(E)				–	E8	–
631/1	(E)	(E)	(E)	–	–	(E)	(E)				–	E8	–
632/1	3'-0" X 7'-0"	A	SCW/PSG	–	58	1	HM/PSG	V8	V8	V8	E19	A12, E12	UNDERCUT
632/2	3'-0" X 7'-0"	B	HM/PSG	–	59	(E)	(E) PSG	–	–	–	V19	A12, E12	EXTERIOR
633/1	PR 3'-0",2'-0"X7'-0"	B	HM/PSG	–	9	(E)	(E) PSG				R19	E8	EXTERIOR
633/2	(E)	(E)	(E)	–	–	(E)	(E)				–	E8	–

* TWO ROOM IDENTIFICATION SIGNS AT BOTH SIDES OF THE DOOR

KEYNOTES

KEYNOTES REFERENCE SPECIFICATION SECTIONS BY MEANS OF A FIVE-DIGIT NUMBER IDENTIFYING THE SECTION WHERE A MORE COMPLETE DESCRIPTION OF THE ITEM INDICATED WILL BE FOUND. THE LETTER SUFFIX OF THE KEYNOTE DOES NOT RELATE TO ANY CORRESPONDING REFERENCE LETTER IN THE SPECIFICATION. KEYNOTES DO NOT DESCRIBE CONSTRUCTION MEANS, METHODS, TECHNIQUES, SEQUENCES, OR PROCEDURES. NO TRADE JURISDICTIONAL ALLOCATION OF THIS WORK IS INTENDED BY THE SUBDIVISION OF THESE KEYNOTES. IT SHALL BE THE CONTRACTOR'S SOLE RESPONSIBILITY TO SUBDIVIDE THE WORK IN THE MANNER HE DEEMS NECESSARY.

DOOR SCHEDULE NOTES

DOOR/FRAME
AN – ANODIZED
PSG – PAINT SEMI-GLOSS

ABBREVIATIONS
HM – HOLLOW METAL
SCW – SOLID CORE WOOD
WMG – WIRE MESH GATE
T – TEMPERED GLASS
PH – PANIC HARDWARE
W – WOOD
ALUM – ALUMINUM

GENERAL NOTES
1. FIELD VERIFY EXIST. DOOR & FRAME CONDITIONS PRIOR TO FABRICATION. NOTIFY ARCHITECT IF EXISTING CONDITIONS DO NOT MATCH INFO ON DWGS.
2. ALL NON-EXIT DOORS SHALL HAVE LEVER TYPE HARDWARE.
3. EXIT DOORS SHALL BE OPERABLE FROM THE INSIDE WITHOUT THE USE OF A KEY OR ANY SPECIAL KNOWLEDGE OR FORCE.
4. ALL DOOR GLAZING TO BE 1/4" TEMPERED GLASS, UNLESS NOTED OTHERWISE.
5. THE LETTERS "PR" PRECEDING "DOOR SIZE" IN THE INDICATED SCHEDULE DIMENSIONS A PAIR OF DOORS REFER TO INDIVIDUAL DOOR SIZES BOTH DOOR LEAVES ARE THE SAME SIZE, U.N.O.
6. DOORS SHALL BE 1 3/4" THICK U.N.O. OR SPECIFIED.
7. GLAZING IN ALL FIRE RATED ASSEMBLIES SHALL BE U.L. LISTED 1/4" THICK WIRE GLASS, INSTALLED IN STEEL FRAMES.
8. COORDINATE DOOR SWING WITH FLOOR PLANS.
9. SOFFIT MECHANICAL ACCESS DOORS TO RECEIVE HARDWARE SET # 52.

KEY PLAN

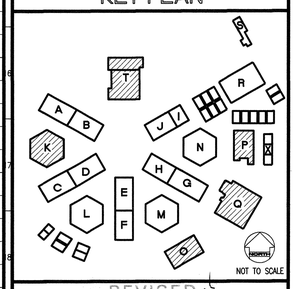

REVISED MAY 1 2 2004

IDENTIFICATION STAMP
DIV. OF THE STATE ARCHITECT
OFFICE OF REGULATION SERVICES
FILE NO. 19-H51
APPL. NO. 03-106434
AC. FLS. SS.
DATE

Dougherty + Dougherty
Architecture • Planning • Interior Design
3194-D Airport Loop Drive
Costa Mesa, CA 92626
(714) 432-0277

Copyright © 2002 Dougherty + Dougherty

Consultant Seal

Architect Seal

LA MIRADA HIGH SCHOOL
MODERNIZATION
NORWALK - LA MIRADA UNIFIED SCHOOL DISTRICT
13520 ADELFA DRIVE LA MIRADA, CA 90638

DOOR SCHEDULE
BUILDINGS
K, O, P, Q & T

Date:	04-01-04
Job:	20237.50
Scale:	AS NOTED
Drawn:	
Revisions:	
1	12-01-03

A015.2

Y:\2002 Projects\020237.5 LMHS\020237AH15.2.dwg, 05/24/2004 05:37:20 PM

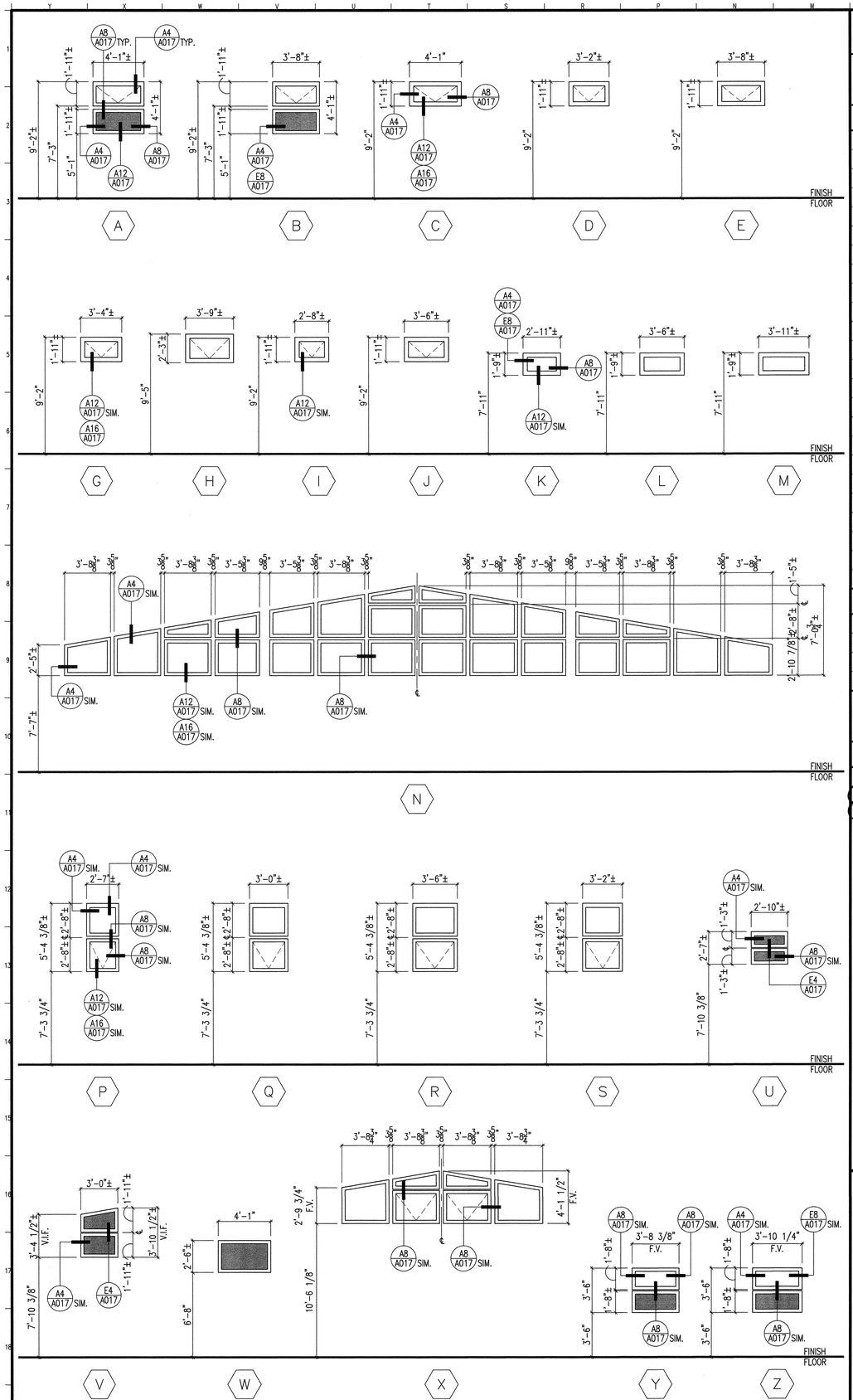

EXTERIOR WINDOW FRAME TYPES

M19

N.T.S.

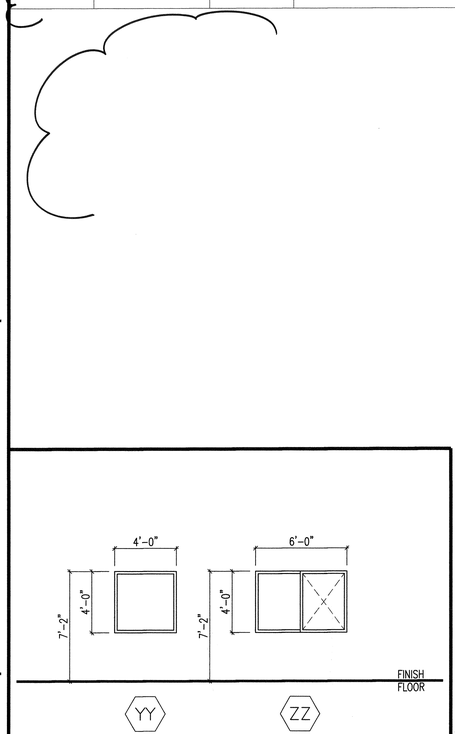

INTERIOR WINDOW FRAME TYPES

G19

N.T.S.

WINDOW SCHEDULE

WINDOW TYPE	ROUGH OPENING WIDTH X HEIGHT	FRAME MAT/FIN	GLAZING	DETAILS (SHEET A017 U.N.O.) HEAD	JAMB	JAMB	SILL	REMARKS
EXTERIOR WINDOWS								
A	(2) 4'-1"± X 1'-11"±	ALUM/KYNAR	1/4" OBSCURE/CLEAR	A4	A4	A8	A12	
B	(2) 3'-8"± X 1'-11"±	ALUM/KYNAR	1/4" OBSCURE/CLEAR	A4	A4/E8	A8	A12	
C	4'-1"± X 1'-11"±	ALUM/KYNAR	1/4" CLEAR	A4	A4	A8	A12/A16	
D	3'-2"± X 1'-11"±	ALUM/KYNAR	1/4" CLEAR	A4	A4	A8	A12/A16	
E	3'-8"± X 1'-11"±	ALUM/KYNAR	1/4" CLEAR	A4	A4	A8	A12/A16	
G	3'-4"± X 1'-11"±	ALUM/KYNAR	1/4" CLEAR	A4	A4	A8	A12 SIM./A16 SIM.	
H	3'-9"± X 2'-3"±	ALUM/KYNAR	1/4" CLEAR	A4	A4	A8	A12 SIM./A16 SIM.	
I	2'-8"± X 1'-11"±	ALUM/KYNAR	1/4" CLEAR	A4	A4	A8	A16 SIM.	
J	3'-6"± X 1'-11"±	ALUM/KYNAR	1/4" CLEAR	A4	A4	A8	A12 SIM./A16 SIM.	
K	2'-11"± X 1'-9"±	ALUM/KYNAR	1/4" CLEAR	A4	A4/E8	A8	A12 SIM.	
L	3'-6"± X 1'-9"±	ALUM/KYNAR	1/4" CLEAR	A4	A4/E8	A8	A12 SIM.	
M	3'-11"± X 1'-9"±	ALUM/KYNAR	1/4" CLEAR	A4	A4/E8	A8	A12 SIM.	
N	SEE FRAME TYPE	ALUM/KYNAR	1/4" CLEAR	A4 SIM.	A4 SIM.	A8 SIM.	A12 SIM./A16 SIM.	
P	(2) 2'-7"± X 2'-8"±	ALUM/KYNAR	1/4" CLEAR	A4 SIM.	A4 SIM.	A8 SIM.	A12 SIM./A16 SIM.	
Q	(2) 3'-0"± X 2'-8"±	ALUM/KYNAR	1/4" CLEAR	A4 SIM.	A4 SIM.	A8 SIM.	A12 SIM./A16 SIM.	
R	(2) 3'-6"± X 2'-8"±	ALUM/KYNAR	1/4" CLEAR	A4 SIM.	A4 SIM.	A8 SIM.	A12 SIM./A16 SIM.	
S	(2) 3'-2"± X 2'-8"±	ALUM/KYNAR	1/4" CLEAR	A4 SIM.	A4 SIM.	A8 SIM.	A12 SIM./A16 SIM.	
U	(2) 2'-10"± X 1'-3"±	ALUM/KYNAR	1/4" OBSCURE	A4 SIM.	A4 SIM.	A8 SIM.	A16 SIM.	
V	SEE FRAME TYPE	ALUM/KYNAR	1/4" OBSCURE	A4 SIM.	A4 SIM.	A4 SIM.	A16 SIM.	
W	4'-1"± X 2'-6"±	ALUM/KYNAR	1/4" OBSCURE	A4 SIM.	A4 SIM.	A8 SIM.	A12 SIM.	
X	SEE FRAME TYPE	ALUM/KYNAR	1/4" CLEAR	A4 SIM.	A4 SIM.	A8 SIM.	A12 SIM.	
Y	(2) 3'-8"± X 1'-8"±	ALUM/KYNAR	1/4" OBSCURE/CLEAR	A4 SIM.	A8 SIM.	A8 SIM.	A12 SIM.	
Z	(2) 3'-10"± X 1'-8"±	ALUM/KYNAR	1/4" OBSCURE/CLEAR	A4 SIM.	A4 SIM.	E8 SIM.	A12 SIM.	
INTERIOR WINDOWS								
YY	4'-0" X 4'-0"	WOOD	1/4" CLEAR	H4	H4	H4	H4	
ZZ	6'-0" X 4'-0"	WOOD	1/4" CLEAR	H4	H4	H4	H4	

WINDOW TYPE	ROUGH OPENING WIDTH X HEIGHT	FRAME MAT/FIN	GLAZING	DETAILS (SHEET A015 U.N.O.) HEAD	JAMB	JAMB	SILL	REMARKS
STOREFRONT								
AA	SEE FRAME TYPE	ALUM/KYNAR	1/4" OBSCURE/CLEAR	H16	A19	A19 SIM.	H19	

KEYNOTES

KEYNOTES REFERENCE SPECIFICATION SECTIONS BY MEANS OF A FIVE-DIGIT NUMBER IDENTIFYING THE SECTION WHERE A MORE COMPLETE DESCRIPTION OF THE ITEM INDICATED WILL BE FOUND. THE LETTER SUFFIX OF THE KEYNOTE DOES NOT RELATE TO ANY CORRESPONDING REFERENCE LETTER IN THE SPECIFICATION. KEYNOTES DO NOT DESCRIBE CONSTRUCTION MEANS, METHODS, TECHNIQUES, SEQUENCES, OR PROCEDURES. NO TRADE JURISDICTIONAL ALLOCATION OF THIS WORK IS INTENDED BY THE SUBDIVISION OF THESE KEYNOTES. IT SHALL BE THE CONTRACTOR'S SOLE RESPONSIBILITY TO SUBDIVIDE THE WORK IN THE MANNER HE DEEMS NECESSARY.

WINDOW SCHED. NOTES

1. WINDOW SCHEDULE DIMENSIONS INDICATE ROUGH OPENING TO THE FACE OF STUDS. DIMENSIONS ARE FOR REFERENCE ONLY. CONTRACTOR IS TO FIELD VERIFY AND MEASURE ALL OPENINGS PRIOR TO FABRICATION.

2. ALL EXTERIOR WINDOW & DOOR GLAZING SHALL BE DOUBLE PANED GLASS.

3. ALL GLAZING SHALL BE TEMPERED GLAZING.

FRAME
PT – PAINT (SEMI-GLOSS)
AN – ANODIZED FINISH

ABBREVIATIONS
HM – HOLLOW METAL
ALUM – ALUMINUM

KEY PLAN

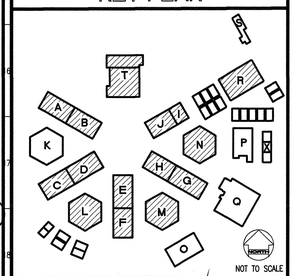

REVISED
IDENTIFICATION STAMP
DIV. OF THE STATE ARCHITECT
OFFICE OF REGULATION SERVICES
FILE NO. 19-H51
APPL. NO. 03-106434
AC. FLS. SS.
DATE
MAY 12 2004

Dougherty + Dougherty
Architecture • Planning • Interior Design
3194-D Airport Loop Drive
Costa Mesa, CA 92626
(714) 427-0277

Copyright © 2002 Dougherty + Dougherty

Consultant Seal

Architect Seal

LA MIRADA HIGH SCHOOL
MODERNIZATION
NORWALK - LA MIRADA UNIFIED SCHOOL DISTRICT
13520 ADELFA DRIVE LA MIRADA, CA 90638

WINDOW SCHEDULE AND FRAME TYPES

Date:	04-01-04
Job:	20237.50
Scale:	AS NOTED
Drawn:	
Revisions:	

A016

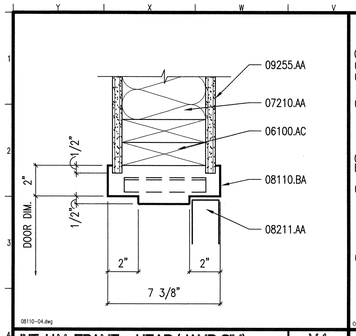

INT. H.M. FRAME - HEAD (JAMB SIM) V4
NEW CONSTRUCTION 3"=1'-0"

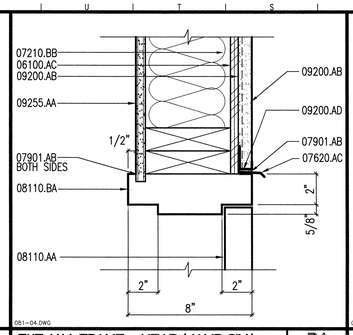

EXT. H.M. FRAME - HEAD (JAMB SIM.) R4
3" = 1'-0"

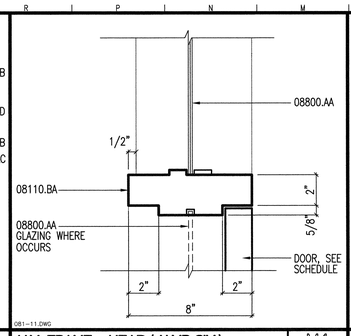

H.M. FRAME - HEAD (JAMB SIM.) M4
3" = 1'-0"

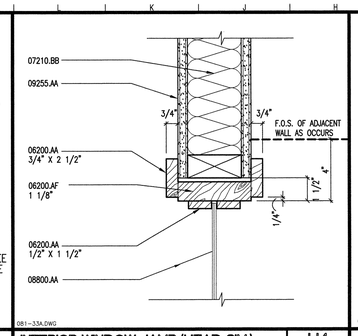

INTERIOR WINDOW JAMB (HEAD SIM.) H4
3" = 1'-0"

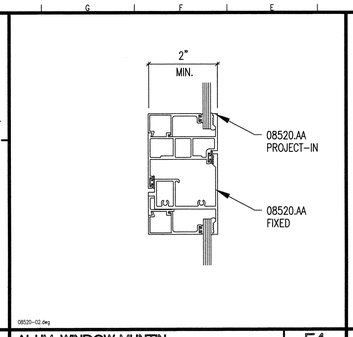

ALUM. WINDOW MUNTIN E4
6"=1'-0"

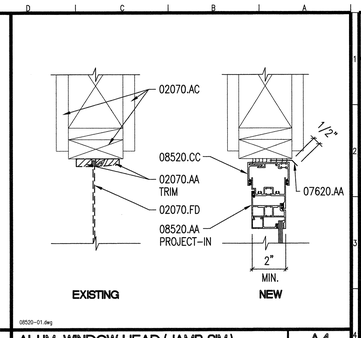

ALUM. WINDOW HEAD (JAMB SIM.) A4
3"=1'-0"

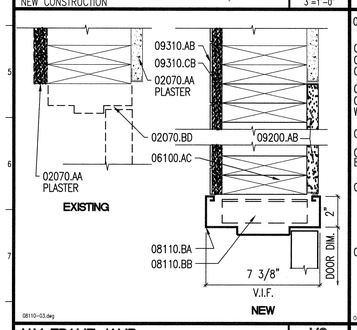

H.M. FRAME JAMB V8
AT RESTROOM 3"=1'-0"

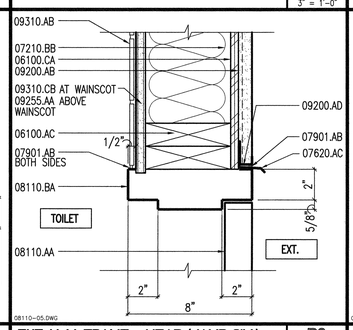

EXT. H. M. FRAME - HEAD (JAMB SIM.) R8
AT RESTROOM 3" = 1'-0"

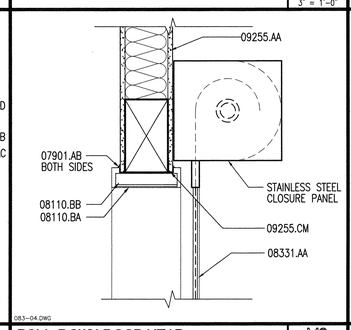

ROLL DOWN DOOR HEAD M8
1 1/2" = 1'-0"

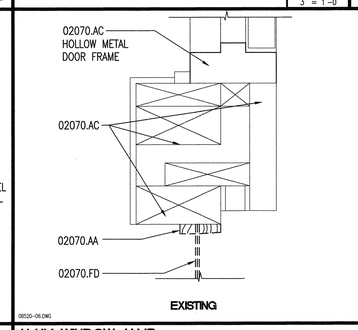

ALUM. WINDOW JAMB E8
3"=1'-0"

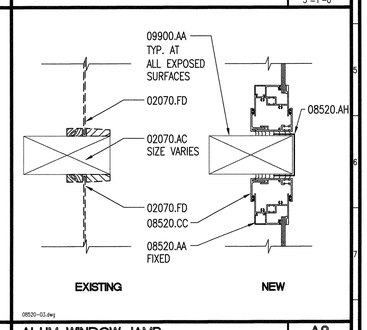

ALUM. WINDOW JAMB A8
3"=1'-0"

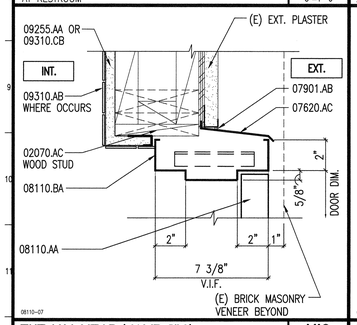

EXT. H.M. HEAD (JAMB SIM.) V12
EXISTING CONDITIONS - EXTERIOR PLASTER 3"=1'-0"

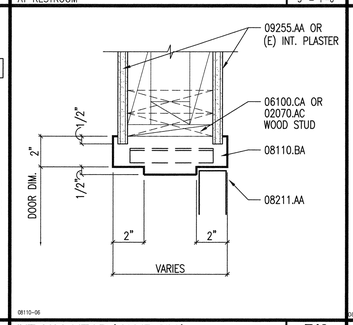

INT. H.M. HEAD (JAMB SIM.) R12
EXISTING CONDITIONS 3"=1'-0"

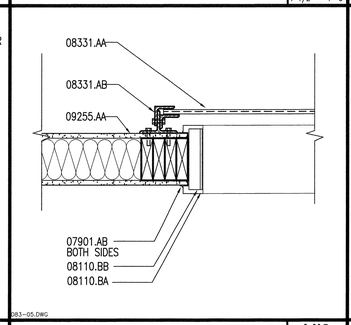

ROLL DOWN DOOR JAMB M12
1/2" = 1'-0"

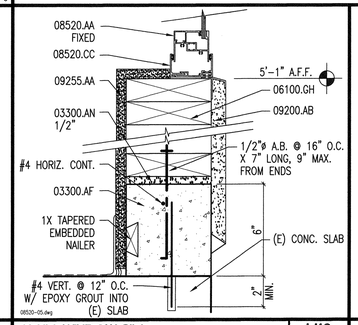

ALUM. WINDOW SILL H12
3"=1'-0"

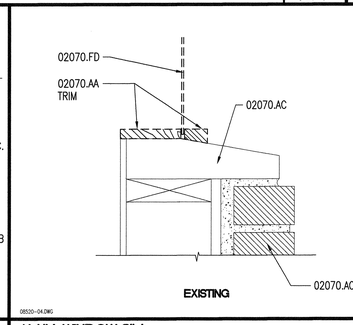

ALUM. WINDOW SILL A12
3"=1'-0"

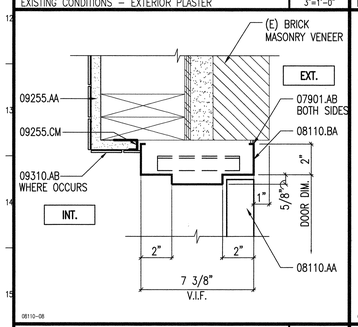

EXT. H.M. JAMB V16
AT MASONRY VENEER 3"=1'-0"

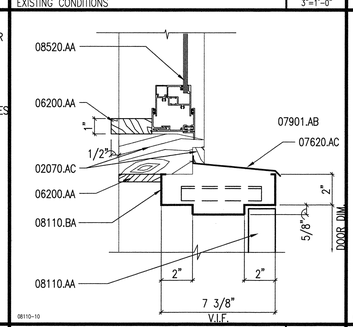

EXT. H.M. HEAD/TRANSOM R16
3"=1'-0"

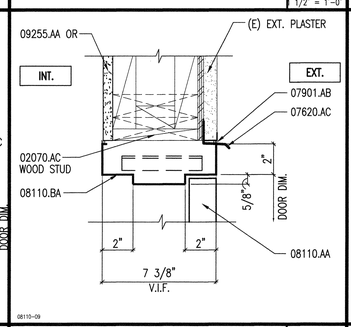

EXT. H.M. JAMB M16
EXISTING CONDITIONS - EXTERIOR PLASTER 3"=1'-0"

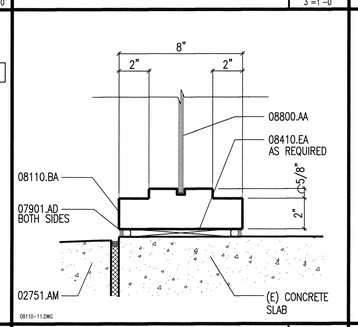

EXT. H.M. SILL H16
3"=1'-0"

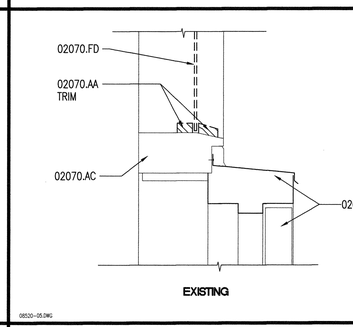

ALUM. WINDOW TRANSOM A16
3"=1'-0"

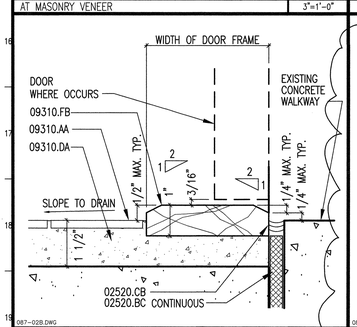

MARBLE THRESHOLD DETAIL V19
AT EXTERIOR WALL 6"=1'-0"

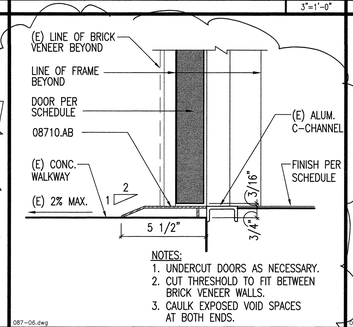

DOOR THRESHOLD R19
3" = 1'-0"

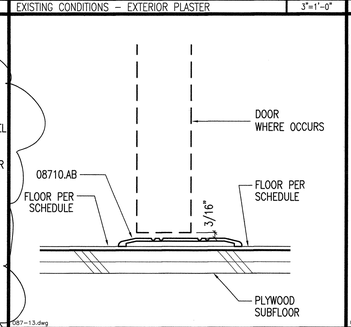

SHEET VINYL TO VCT THRESHOLD M19
6"=1'-0"

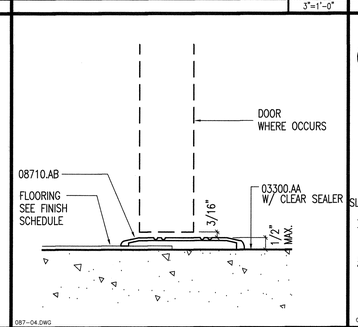

VINYL TO CONCRETE THRESHOLD H19
6" = 1'-0"

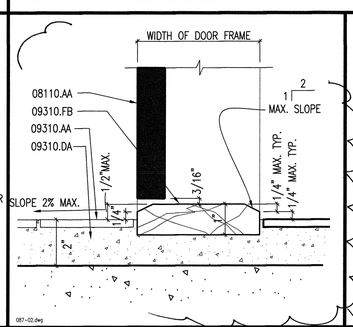

MARBLE THRESHOLD DETAIL E19
AT RESTROOM 3"=1'-0"

A19

KEYNOTES

KEYNOTES REFERENCE SPECIFICATION SECTIONS BY MEANS OF A FIVE-DIGIT NUMBER IDENTIFYING THE SECTION WHERE A MORE COMPLETE DESCRIPTION OF THE ITEM INDICATED WILL BE FOUND. THE LETTER SUFFIX OF THE KEYNOTE DOES NOT RELATE TO ANY CORRESPONDING REFERENCE LETTER IN THE SPECIFICATION. KEYNOTES DO NOT DESCRIBE CONSTRUCTION MEANS, METHODS, TECHNIQUES, SEQUENCES, OR PROCEDURES. NO TRADE JURISDICTIONAL ALLOCATION OF THIS WORK IS INTENDED BY THE SUBDIVISION OF THESE KEYNOTES. IT SHALL BE THE CONTRACTOR'S SOLE RESPONSIBILITY TO SUBDIVIDE THE WORK IN THE MANNER HE DEEMS NECESSARY.

DIVISION 2 - SITEWORK

02070.AA REMOVE EXISTING ITEM
02070.AC EXISTING ITEM TO REMAIN
02070.BD REMOVE EXISTING DOOR AND FRAME
02070.FD REMOVE EXISTING WINDOW AND FRAME
02520.AC CONCRETE PAVING - NON-SLIP BROOM FINISH TO MATCH EXISTING
02520.BC EXPANSION JOINT FILLER
02751.AM EXISTING CONCRETE PAVING

DIVISION 3 - CONCRETE

03300.AA CONCRETE SLAB - SEE STRUCTURAL
03300.AF CONCRETE CURB
03300.AN DRYPACK

DIVISION 6 - WOOD & PLASTICS

06100.AC 2X6 WOOD STUD
06100.BD 2X CONT. LEDGER - SEE STRUCTURAL
06100.CA WOOD STUD
06100.GH 2X6 DOUBLE PLATE
06200.AA WOOD TRIM
06200.AF WOOD FRAME

DIVISION 7 - THERMAL & MOISTURE PROTECTION

07210.AA R-11 (3-1/2") THERMAL INSULATION
07210.BB 3-1/2" (R-11) ACOUSTICAL INSULATION
07620.AA GALVANIZED SHEET METAL FLASHING
07620.AC GALV. SHEET METAL DRIP EDGE
07901.AB SEALANT
07901.AD SEALANT W/ BACKER ROD

DIVISION 8 - DOORS & WINDOWS

08110.AA HOLLOW METAL DOOR, VERIFY SWING
08110.BA HOLLOW METAL FRAME
08110.BB HOLLOW METAL FRAME ANCHOR
08211.AA SOLID CORE WOOD DOOR
08331.AA OVERHEAD COILING DOOR
08331.AB OVERHEAD DOOR TRACK
08410.EA SHIM
08520.AA ALUMINUM WINDOW FRAME
08520.AH ALUMINUM BRAKE METAL
08520.CA COMPENSATION CHANNEL EXTENSION
08520.CC COMPENSATION CHANNEL SET IN SEALANT
08710.AB THRESHOLD
08800.AA GLAZING AS SCHEDULED

DIVISION 9 - FINISHES

09200.AB EXTERIOR PLASTER
09200.AD METAL CASING BEAD
09255.AA 5/8" TYPE "X" GYPSUM BOARD
09255.CM J-MOLD
09310.AA CERAMIC TILE BASE
09310.AB CERAMIC TILE WAINSCOT
09310.CA 5/8" TYPE "X" GYPSUM BOARD
09310.CB 5/8" CEMENTITIOUS BACKER BOARD
09310.DA MORTAR BED
09310.FB MARBLE THRESHOLD
09900.AA PAINT FINISH

KEY PLAN

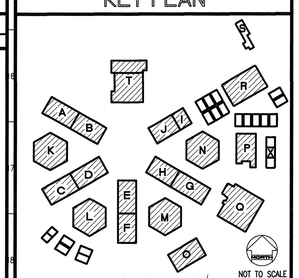

REVISED MAY 12 2004

IDENTIFICATION STAMP
DIV. OF THE STATE ARCHITECT
OFFICE OF REGULATION SERVICES
FILE NO. 19-H51
APPL. NO. 03-106434
AC. FLS. SS
DATE

Dougherty + Dougherty
Architecture • Planning • Interior Design
2697 Bristol Street, Suite 200
Costa Mesa, CA 92626
(714) 427-0277

Copyright © 2002 Dougherty + Dougherty

Consultant Seal

Architect Seal

LA MIRADA HIGH SCHOOL
MODERNIZATION
NORWALK - LA MIRADA UNIFIED SCHOOL DISTRICT
13520 ADELFA DRIVE LA MIRADA, CA 90638

WINDOW & DOOR DETAILS

Date:	04-01-04
Job:	20237.50
Scale:	AS NOTED
Drawn:	
Revisions:	

A017

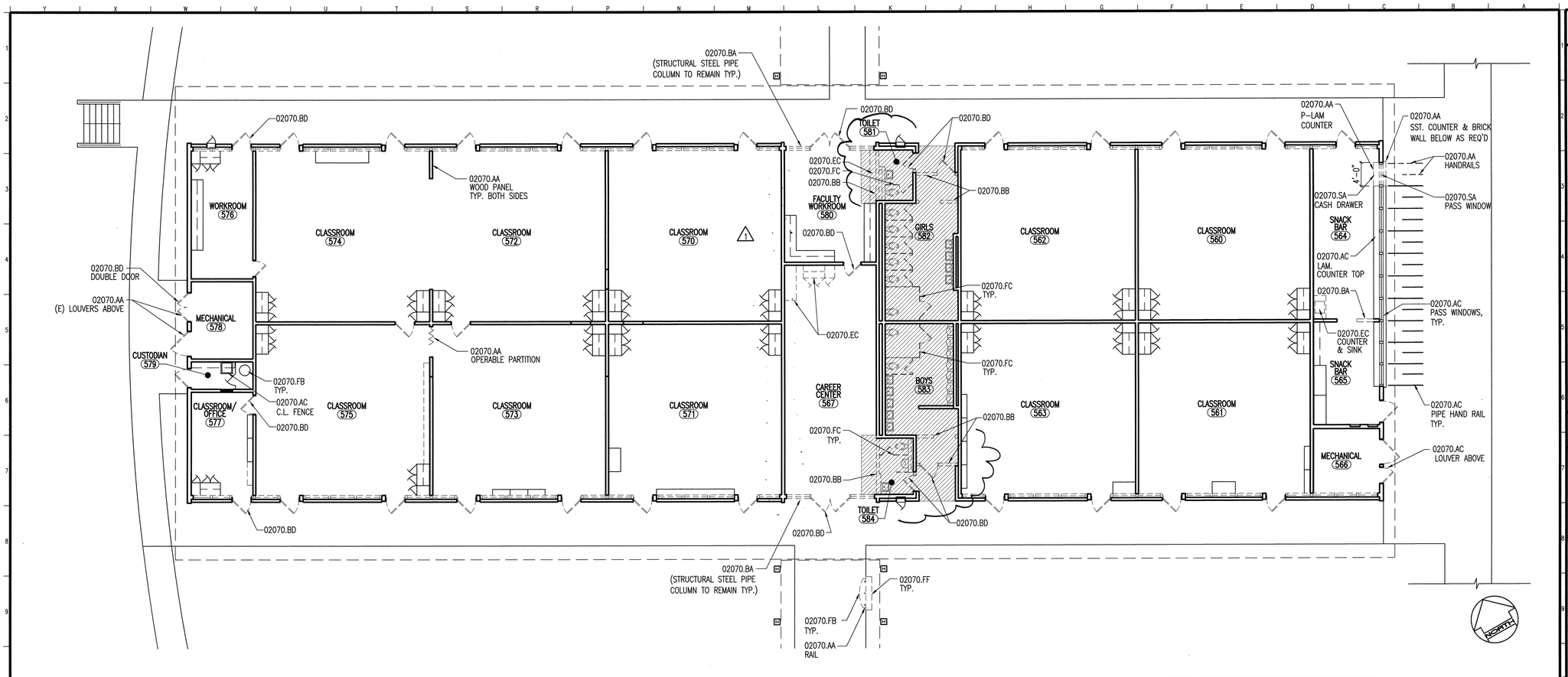

BUILDING A-B DEMOLITION PLAN — A10

550 BUILDING — 1/8"=1'-0"

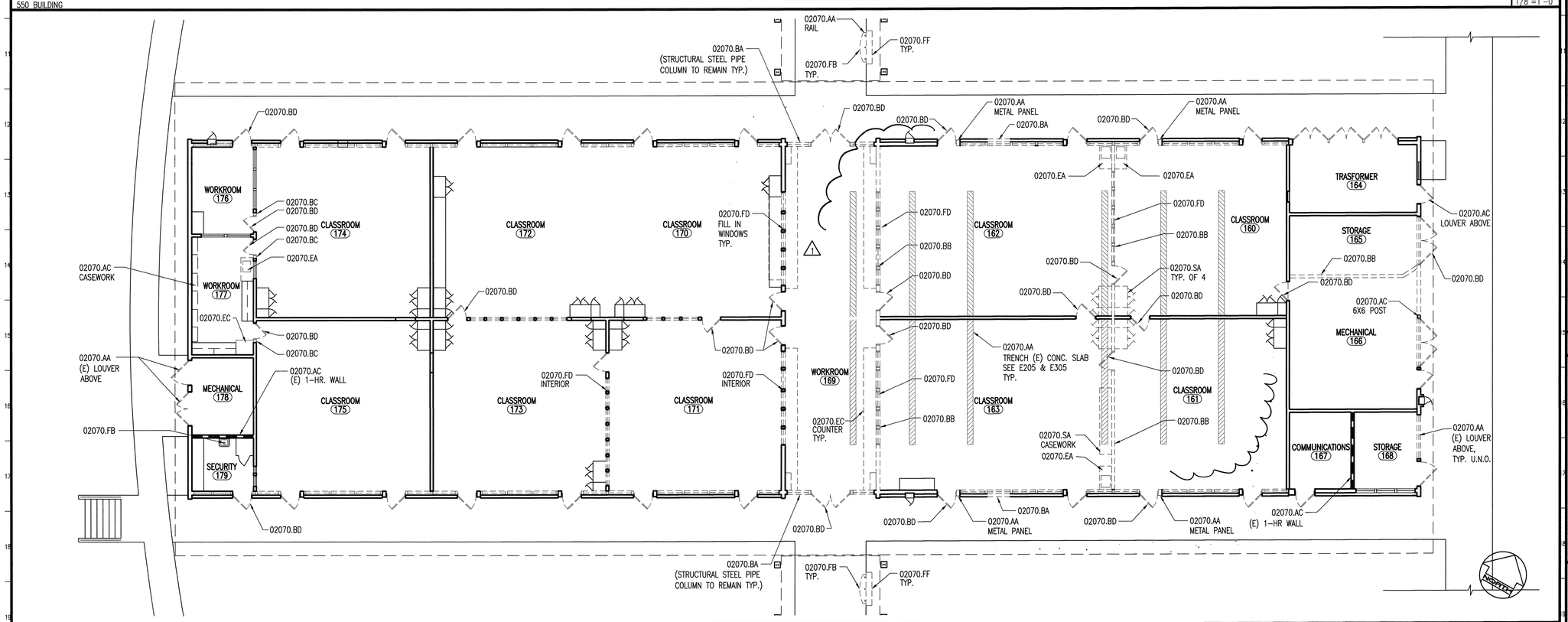

BUILDING C-D DEMOLITION PLAN — A19

150 BUILDING — 1/8"=1'-0"

KEYNOTES

KEYNOTES REFERENCE SPECIFICATION SECTIONS BY MEANS OF A FIVE-DIGIT NUMBER IDENTIFYING THE SECTION WHERE A MORE COMPLETE DESCRIPTION OF THE ITEM INDICATED WILL BE FOUND. THE LETTER SUFFIX OF THE KEYNOTE DOES NOT RELATE TO ANY CORRESPONDING REFERENCE LETTER IN THE SPECIFICATION. KEYNOTES DO NOT DESCRIBE CONSTRUCTION MEANS, METHODS, TECHNIQUES, SEQUENCES, OR PROCEDURES. NO TRADE JURISDICTIONAL ALLOCATION OF THIS WORK IS INTENDED BY THE SUBDIVISION OF THESE KEYNOTES. IT SHALL BE THE CONTRACTOR'S SOLE RESPONSIBILITY TO SUBDIVIDE THE WORK IN THE MANNER HE DEEMS NECESSARY.

DIVISION 2 – SITEWORK

02070.AA	REMOVE EXISTING ITEM
02070.AC	EXISTING ITEM TO REMAIN
02070.BA	REMOVE EXISTING PORTION OF WALL
02070.BB	REMOVE EXISTING NON-BEARING PARTITION
02070.BC	REMOVE EXISTING PORTION OF WALL FOR NEW DOOR
02070.BD	REMOVE EXISTING DOOR AND FRAME
02070.EA	REMOVE EXISTING BASE CABINET AND SINK
02070.EC	REMOVE EXISTING CASEWORK
02070.FB	REMOVE EXISTING PLUMBING FIXTURES
02070.FC	REMOVE EXISTING TOILET PARTITION
02070.FD	REMOVE EXISTING WINDOW AND FRAME
02070.FF	REMOVE EXISTING PARTIAL HEIGHT WALL
02070.SA	SALVAGE ITEM – REUSE IN NEW WORK

DEMOLITION LEGEND

- AREA OF CONCRETE SLAB TO BE REMOVED
- DOOR TO BE REMOVED FRAME TO REMAIN U.N.O.
- EXISTING DOOR TO REMAIN
- EXISTING NON-BEARING, NON-SHEAR WALL TO BE REMOVED. CURB TO BE REMOVED WHERE OCCURS
- EXISTING PARTITION WALL TO REMAIN

1. FLOORS:
REMOVE (E) FLOORING, REMOVE (E) WALL BASE, PREPARE TO RECEIVE NEW FINISH, U.N.O.
SEE FINISH SCHEDULE (A011–A012)

2. DOORS:
REMOVE (E) DOORS AND HARDWARE, U.N.O.
(E) HOLLOW METAL & INTERIOR FRAMES TO REMAIN, U.N.O.
SEE DOOR SCHEDULES (A013–A015.2)

3. CASEWORK:
(E) CASEWORK TO REMAIN, U.N.O.
REMOVE ALL (E) COUNTER TOPS & BACKSPLASHES, U.N.O.

4. WINDOWS:
REMOVE ALL (E) EXTERIOR WINDOWS AND FRAMES, U.N.O.

5. WINDOW COVERINGS:
REMOVE, CLEAN & REINSTALL (E) WINDOW COVERINGS.

6. ACCESSORIES:
REMOVE ALL EXISTING CHALKBOARDS, TACKBOARDS AND MARKERBOARDS U.N.O. REMOVE PROJECTION SCREENS AND REINSTALL ABOVE (N) WHITEBOARD.

7. CEILINGS:
REMOVE (E) ACOUSTICAL CEILING TILES, REMOVE SPRAY-ON ACOUSTIC CEILINGS, U.N.O.
REMOVE (E) CEILING ACCESS PANELS, U.N.O.

8. ACOUSTIC WALL TREATMENT:
REMOVE ALL ACOUSTIC WALL TILE AND SPRAY-ON ACOUSTIC TREATMENT. PREPARE WALL FOR (N) FINISH SURFACE.

9. TOILET ROOMS:
REMOVE EXISTING FIXTURES, ACCESSORIES, TERRAZZO, CERAMIC TILE, & PLASTER WALL, CEILING AND FLOOR FINISHES, U.N.O. REMOVE (E) FINISH SUBSTRATES, U.N.O.

10. REMOVE (E) ELECTRICAL SURFACE MOUNTED RACEWAYS.

11. REFER TO MECHANICAL, PLUMBING AND ELECTRICAL DWGS FOR ADDITIONAL DEMOLITION NOTES & INFORMATION.

12. REFER TO PLUMBING AND ELECTRICAL DWGS FOR (E) CLASSROOMS SLAB TRENCHING LOCATIONS.

KEY PLAN

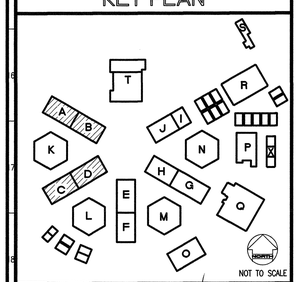

REVISED

IDENTIFICATION STAMP
DIV. OF THE STATE ARCHITECT
OFFICE OF REGULATION SERVICES
FILE NO. 19-H51
APPL. NO. 03-106434
AC ___ FLS ___ SS ___
DATE ___

MAY 12 2004

Dougherty ■ Dougherty
Architecture · Planning · Interior Design
2154-D Newport Blvd. Drive
Costa Mesa, CA 92626
(714) 427-0277

Copyright © 2002 Dougherty + Dougherty

REGISTERED ARCHITECT — DOUGLAS W. DOUGHERTY — No. C-8604 — STATE OF CALIFORNIA

Architect Seal

Consultant Seal

LA MIRADA HIGH SCHOOL
MODERNIZATION
NORWALK - LA MIRADA UNIFIED SCHOOL DISTRICT
13520 ADELFA DRIVE LA MIRADA, CA 90638

CLASSROOM BUILDINGS A-B & C-D
DEMO PLANS

Date:	04-01-04
Job:	20237.50
Scale:	AS NOTED
Drawn:	
Revisions:	
1	12-01-03

AD101

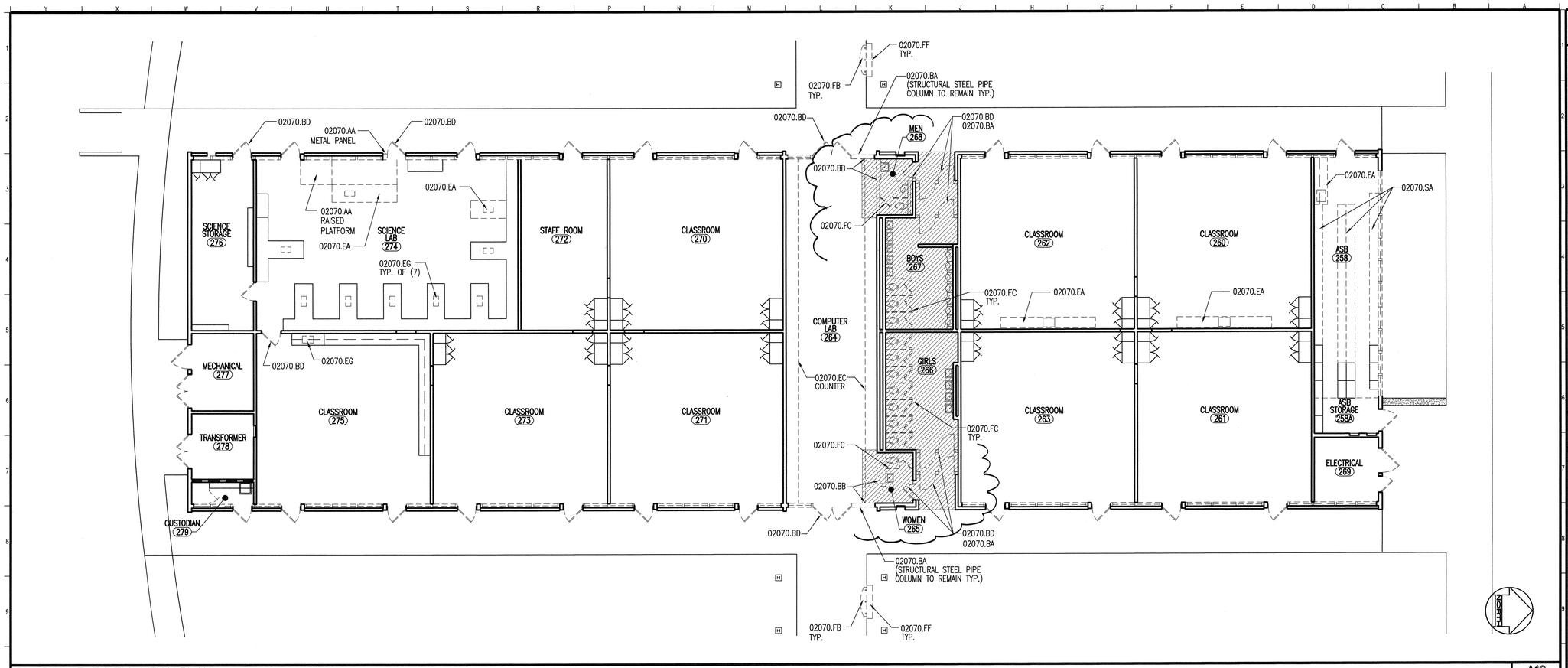

BUILDING E-F DEMOLITION PLAN

250 BUILDING

A10

1/8"=1'-0"

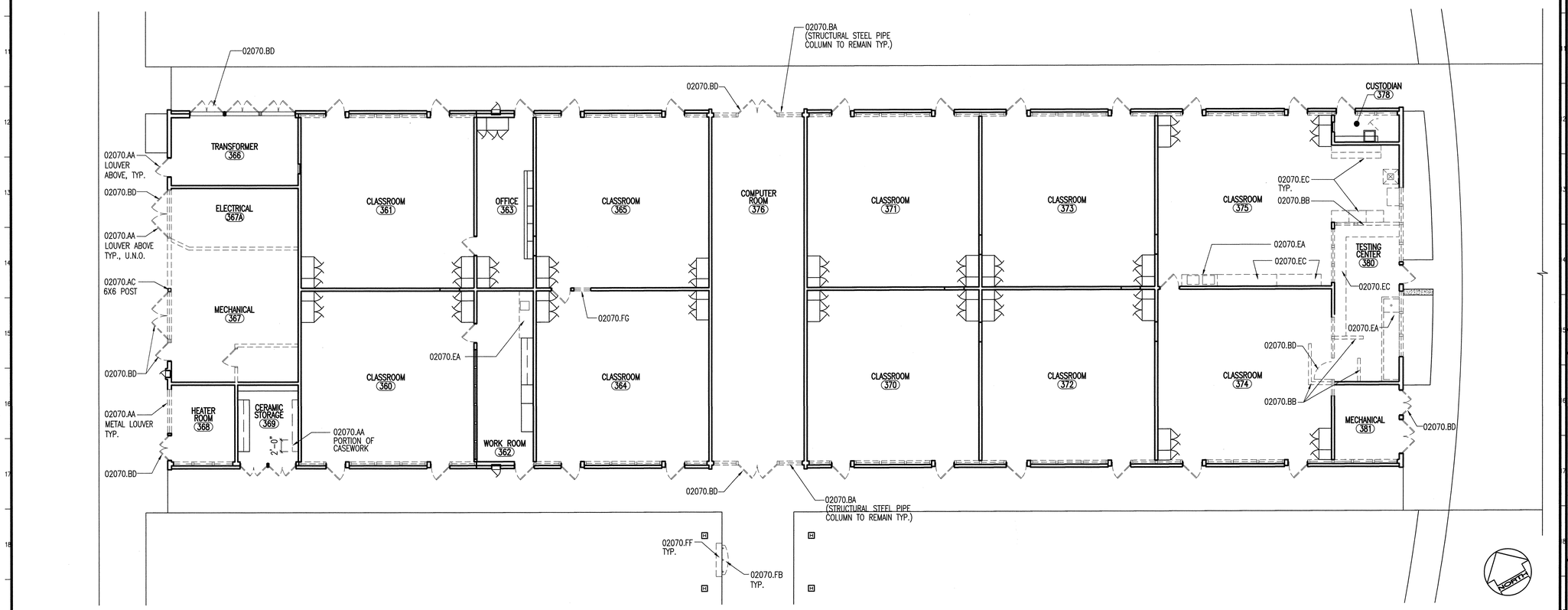

BUILDING G-H DEMOLITION PLAN

350 BUILDING

A19

1/8"=1'-0"

KEYNOTES

KEYNOTES REFERENCE SPECIFICATION SECTIONS BY MEANS OF A FIVE-DIGIT NUMBER IDENTIFYING THE SECTION WHERE A MORE COMPLETE DESCRIPTION OF THE ITEM INDICATED WILL BE FOUND. THE LETTER SUFFIX OF THE KEYNOTE DOES NOT RELATE TO ANY CORRESPONDING REFERENCE LETTER IN THE SPECIFICATION. KEYNOTES DO NOT DESCRIBE CONSTRUCTION MEANS, METHODS, TECHNIQUES, SEQUENCES, OR PROCEDURES. NO TRADE JURISDICTIONAL ALLOCATION OF THIS WORK IS INTENDED BY THE SUBDIVISION OF THESE KEYNOTES. IT SHALL BE THE CONTRACTOR'S SOLE RESPONSIBILITY TO SUBDIVIDE THE WORK IN THE MANNER HE DEEMS NECESSARY.

DIVISION 2 – SITEWORK

02070.AA	REMOVE EXISTING ITEM
02070.AC	EXISTING ITEM TO REMAIN
02070.BA	REMOVE EXISTING PORTION OF WALL
02070.BB	REMOVE EXISTING NON-BEARING PARTITION
02070.BD	REMOVE EXISTING DOOR AND FRAME
02070.EA	REMOVE EXISTING BASE CABINET AND SINK
02070.EC	REMOVE EXISTING CASEWORK
02070.EG	REMOVE EXISTING SINK
02070.FB	REMOVE EXISTING PLUMBING FIXTURES
02070.FC	REMOVE EXISTING TOILET PARTITION
02070.FF	REMOVE EXISTING PARTIAL HEIGHT WALL
02070.FG	REMOVE EXISTING WINDOWS AND FRAMES
02070.SA	SALVAGE ITEM – REUSE IN NEW WORK

DEMOLITION LEGEND

- AREA OF CONCRETE SLAB TO BE REMOVED
- DOOR TO BE REMOVED FRAME TO REMAIN U.N.O.
- EXISTING DOOR TO REMAIN
- EXISTING NON-BEARING, NON-SHEAR WALL TO BE REMOVED. CURB TO BE REMOVED WHERE OCCURS
- EXISTING PARTITION WALL TO REMAIN

1. FLOORS:
REMOVE (E) FLOORING, REMOVE (E) WALL BASE, PREPARE TO RECEIVE NEW FINISH, U.N.O.
SEE FINISH SCHEDULE (A011–A012)

2. DOORS:
REMOVE (E) DOORS AND HARDWARE, U.N.O.
(E) HOLLOW METAL & INTERIOR FRAMES TO REMAIN, U.N.O.
SEE DOOR SCHEDULES (A013–A015.2)

3. CASEWORK:
(E) CASEWORK TO REMAIN, U.N.O.
REMOVE ALL (E) COUNTER TOPS & BACKSPLASHES, U.N.O.

4. WINDOWS:
REMOVE ALL (E) EXTERIOR WINDOWS AND FRAMES, U.N.O.

5. WINDOW COVERINGS:
REMOVE, CLEAN & REINSTALL (E) WINDOW COVERINGS.

6. ACCESSORIES:
REMOVE ALL EXISTING CHALKBOARDS, TACKBOARDS AND MARKERBOARDS U.N.O. REMOVE PROJECTION SCREENS AND REINSTALL ABOVE (N) WHITEBOARD.

7. CEILINGS:
REMOVE (E) ACOUSTICAL CEILING TILES, REMOVE SPRAY-ON ACOUSTIC CEILINGS, U.N.O.
REMOVE (E) CEILING ACCESS PANELS, U.N.O.

8. ACOUSTIC WALL TREATMENT:
REMOVE ALL ACOUSTIC WALL TILE AND SPRAY-ON ACOUSTIC TREATMENT. PREPARE WALL FOR (N) FINISH SURFACE.

9. TOILET ROOMS:
REMOVE EXISTING FIXTURES, ACCESSORIES, TERRAZZO, CERAMIC TILE, & PLASTER WALL, CEILING AND FLOOR FINISHES, U.N.O. REMOVE (E) FINISH SUBSTRATES, U.N.O.

10. REMOVE (E) ELECTRICAL SURFACE MOUNTED RACEWAYS.

11. REFER TO MECHANICAL, PLUMBING AND ELECTRICAL DWGS FOR ADDITIONAL DEMOLITION NOTES & INFORMATION.

12. REFER TO PLUMBING AND ELECTRICAL DWGS FOR (E) CLASSROOMS SLAB TRENCHING LOCATIONS.

KEY PLAN

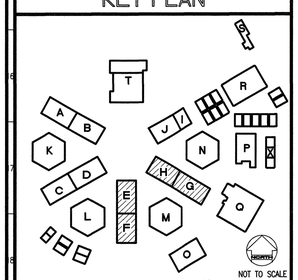

REVISED MAY 12 2004

IDENTIFICATION STAMP
DIV. OF THE STATE ARCHITECT
OFFICE OF REGULATION SERVICES
FILE NO. 19-H51
APPL. NO. 03-106434
AC. FLS. NG SS.
DATE

Dougherty + Dougherty
Architecture • Planning • Interior Design
3194-D Airport Loop Drive
Costa Mesa, CA 92626
(714) 427-0277

Copyright © 2002 Dougherty + Dougherty

Consultant Seal

LA MIRADA HIGH SCHOOL
MODERNIZATION
NORWALK - LA MIRADA UNIFIED SCHOOL DISTRICT
13520 ADELFA DRIVE LA MIRADA, CA 90638

CLASSROOM BUILDINGS E-F & G-H DEMO PLANS

Date:	04-01-04
Job:	20237.50
Scale:	AS NOTED
Drawn:	
Revisions:	

AD102

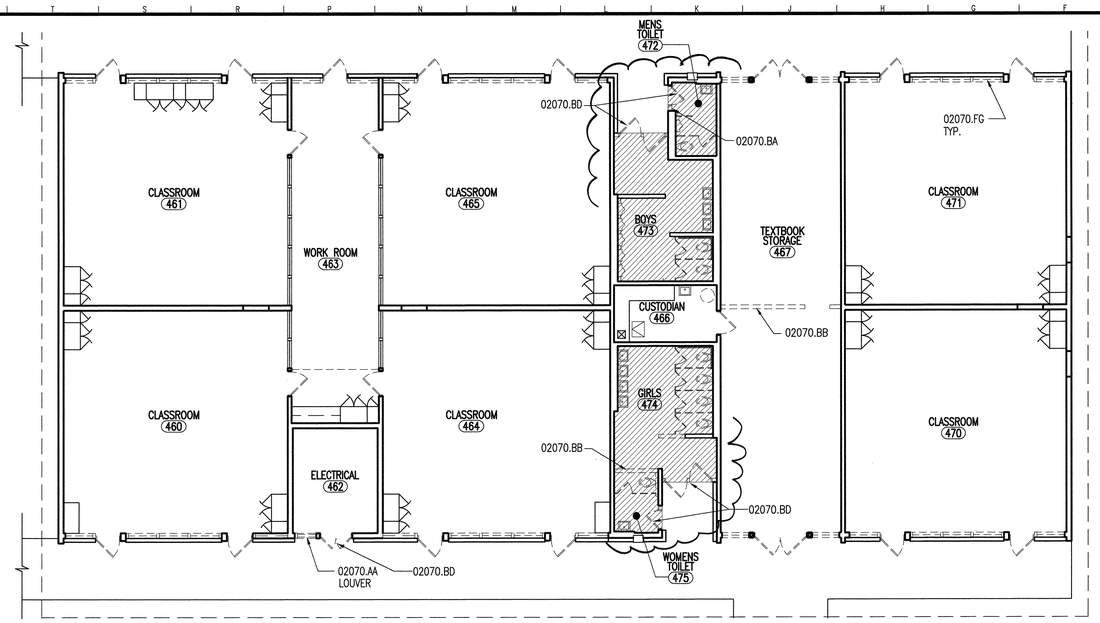

BUILDING J-I DEMOLITION PLAN

450 BUILDING

A10

1/8"=1'-0"

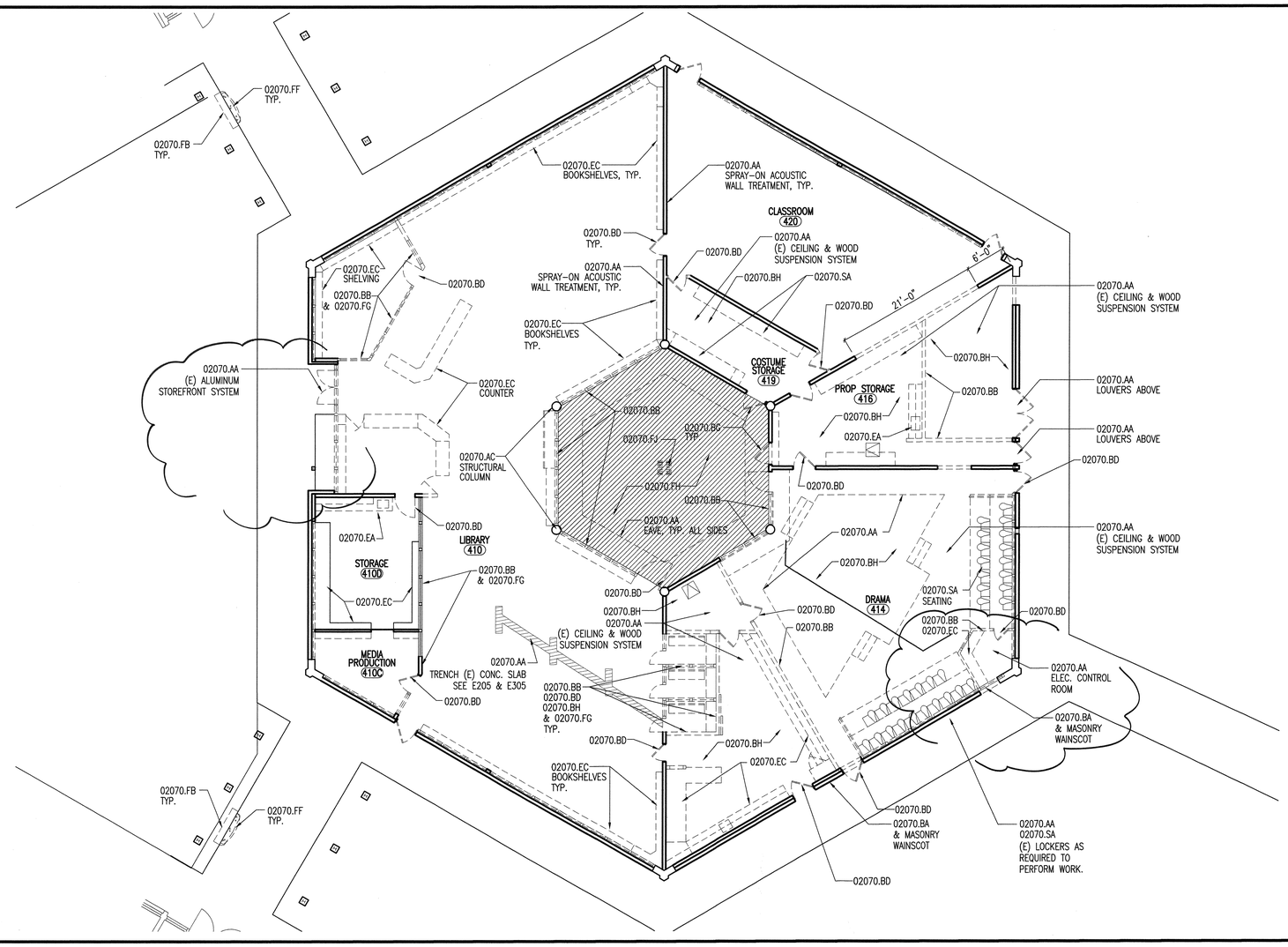

BUILDING N DEMOLITION PLAN

LIBRARY/DRAMA BUILDING

A19

1/8"=1'-0"

KEYNOTES

KEYNOTES REFERENCE SPECIFICATION SECTIONS BY MEANS OF A FIVE-DIGIT NUMBER IDENTIFYING THE SECTION WHERE A MORE COMPLETE DESCRIPTION OF THE ITEM INDICATED WILL BE FOUND. THE LETTER SUFFIX OF THE KEYNOTE DOES NOT RELATE TO ANY CORRESPONDING REFERENCE LETTER IN THE SPECIFICATION. KEYNOTES DO NOT DESCRIBE CONSTRUCTION MEANS, METHODS, TECHNIQUES, SEQUENCES, OR PROCEDURES. NO TRADE JURISDICTIONAL ALLOCATION OF THIS WORK IS INTENDED BY THE SUBDIVISION OF THESE KEYNOTES. IT SHALL BE THE CONTRACTOR'S SOLE RESPONSIBILITY TO SUBDIVIDE THE WORK IN THE MANNER HE DEEMS NECESSARY.

DIVISION 2 - SITEWORK

02070.AA	REMOVE EXISTING ITEM
02070.AC	EXISTING ITEM TO REMAIN
02070.BA	REMOVE EXISTING PORTION OF WALL
02070.BB	REMOVE EXISTING NON-BEARING PARTITION
02070.BD	REMOVE EXISTING DOOR AND FRAME
02070.BG	REMOVE EXISTING DOOR, FRAME TO REMAIN
02070.BH	REMOVE EXISTING HARD CEILING
02070.EA	REMOVE EXISTING BASE CABINET AND SINK
02070.EC	REMOVE EXISTING CASEWORK
02070.FB	REMOVE EXISTING PLUMBING FIXTURES
02070.FF	REMOVE EXISTING PARTIAL HEIGHT WALL
02070.FG	REMOVE EXISTING WINDOWS AND FRAMES
02070.FH	REMOVE EXISTING SLAB
02070.FJ	REMOVE EXISTING DRAIN
02070.SA	SALVAGE ITEM - REUSE IN NEW WORK

DEMOLITION LEGEND

- AREA OF CONCRETE SLAB TO BE REMOVED
- DOOR TO BE REMOVED FRAME TO REMAIN U.N.O.
- EXISTING DOOR TO REMAIN
- EXISTING NON-BEARING, NON-SHEAR WALL TO BE REMOVED. CURB TO BE REMOVED WHERE OCCURS
- EXISTING PARTITION WALL TO REMAIN

1. FLOORS:
REMOVE (E) FLOORING, REMOVE (E) WALL BASE, PREPARE TO RECEIVE NEW FINISH, U.N.O.
SEE FINISH SCHEDULE (A011-A012)

2. DOORS:
REMOVE (E) DOORS AND HARDWARE, U.N.O.
(E) HOLLOW METAL & INTERIOR FRAMES TO REMAIN, U.N.O.
SEE DOOR SCHEDULES (A013-A015.2)

3. CASEWORK:
(E) CASEWORK TO REMAIN, U.N.O.
REMOVE ALL (E) COUNTER TOPS & BACKSPLASHES, U.N.O.

4. WINDOWS:
REMOVE ALL (E) EXTERIOR WINDOWS AND FRAMES, U.N.O.

5. WINDOW COVERINGS:
REMOVE, CLEAN & REINSTALL (E) WINDOW COVERINGS.

6. ACCESSORIES:
REMOVE ALL EXISTING CHALKBOARDS, TACKBOARDS AND MARKERBOARDS U.N.O. REMOVE PROJECTION SCREENS AND REINSTALL ABOVE (N) WHITEBOARD.

7. CEILINGS:
REMOVE (E) ACOUSTICAL CEILING TILES, REMOVE SPRAY-ON ACOUSTIC CEILINGS, U.N.O.
REMOVE (E) CEILING ACCESS PANELS, U.N.O.

8. ACOUSTIC WALL TREATMENT:
REMOVE ALL ACOUSTIC WALL TILE AND SPRAY-ON ACOUSTIC TREATMENT. PREPARE WALL FOR (N) FINISH SURFACE.

9. TOILET ROOMS:
REMOVE EXISTING FIXTURES, ACCESSORIES, TERRAZZO, CERAMIC TILE, & PLASTER WALL, CEILING AND FLOOR FINISHES, U.N.O. REMOVE (E) FINISH SUBSTRATES, U.N.O.

10. REMOVE (E) ELECTRICAL SURFACE MOUNTED RACEWAYS.

11. REFER TO MECHANICAL, PLUMBING AND ELECTRICAL DWGS FOR ADDITIONAL DEMOLITION NOTES & INFORMATION.

12. REFER TO PLUMBING AND ELECTRICAL DWGS FOR (E) CLASSROOMS SLAB TRENCHING LOCATIONS.

KEY PLAN

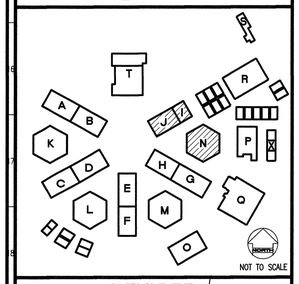

REVISED MAY 1 2 2004

IDENTIFICATION STAMP
DIV. OF THE STATE ARCHITECT
OFFICE OF REGULATION SERVICES
FILE NO. 19-76
APPL. NO. 03-108434
AC ___ FLS. ___ SS ___
DATE ___

Dougherty + Dougherty
Architecture • Planning • Interior Design
3194-D Airport Loop Drive
Costa Mesa, CA 92626
(714) 427-0277

Copyright © 2002 Dougherty + Dougherty

Architect Seal

Consultant Seal

LA MIRADA HIGH SCHOOL MODERNIZATION
NORWALK - LA MIRADA UNIFIED SCHOOL DISTRICT
13520 ADELFA DRIVE LA MIRADA, CA 90638

CLASSROOM BUILDINGS I-J & N
DEMO PLANS

Date:	04-01-04
Job:	20237.50
Scale:	AS NOTED
Drawn:	
Revisions:	

AD103

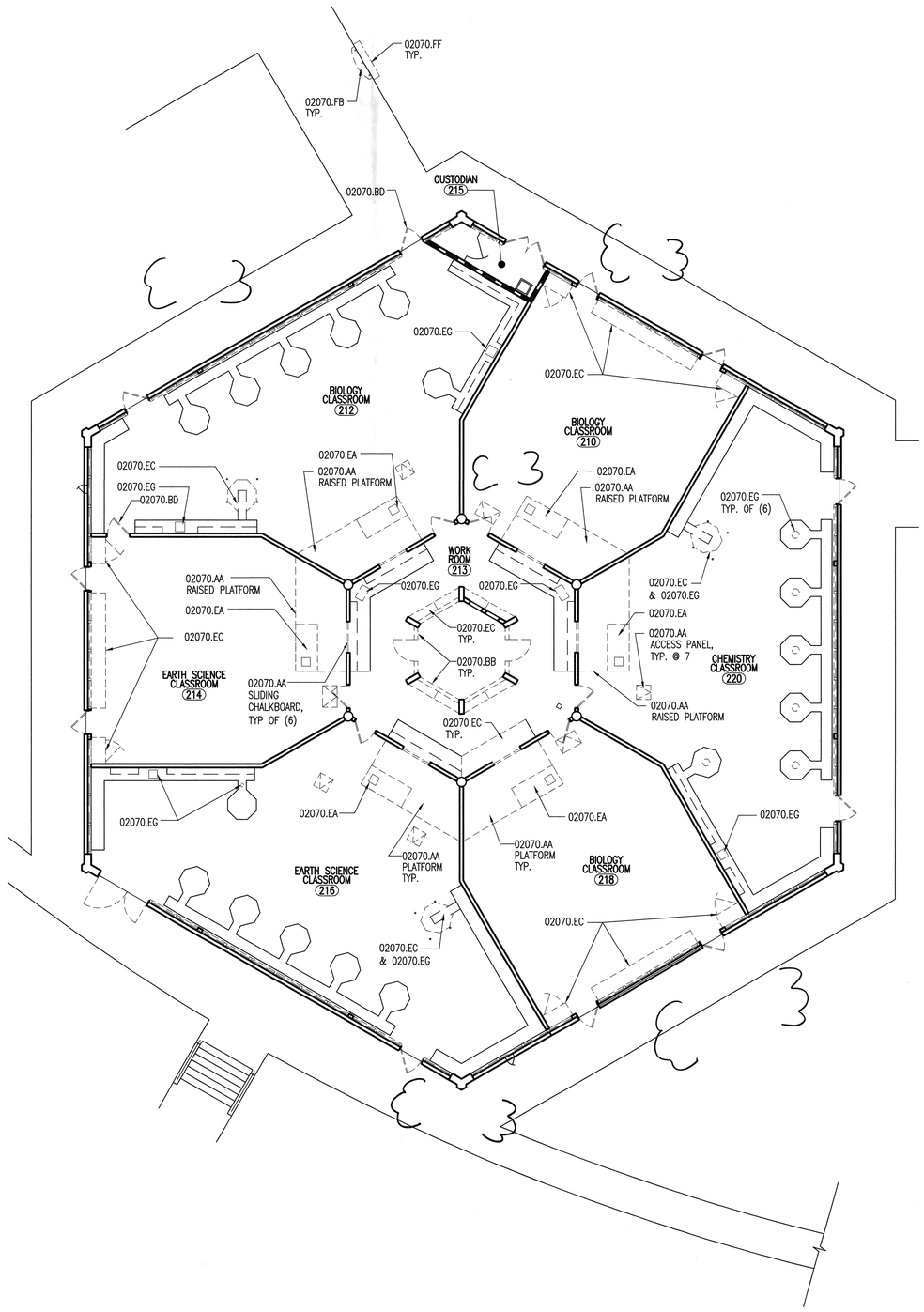

BUILDING L DEMOLITION PLAN — M19

200 BUILDING — 1/8"=1'-0"

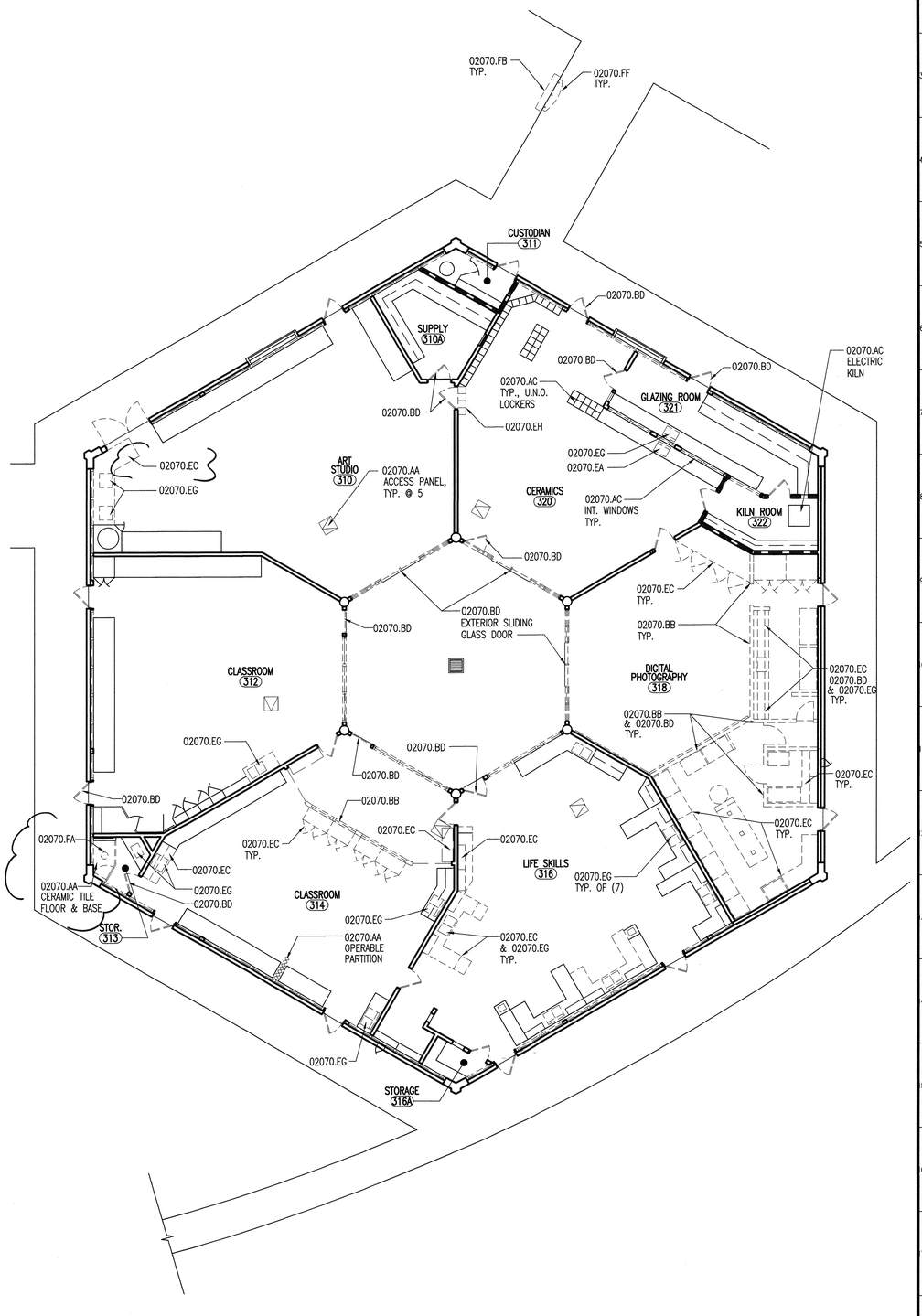

BUILDING M DEMOLITION PLAN — A19

300 BUILDING — 1/8"=1'-0"

KEYNOTES

KEYNOTES REFERENCE SPECIFICATION SECTIONS BY MEANS OF A FIVE-DIGIT NUMBER IDENTIFYING THE SECTION WHERE A MORE COMPLETE DESCRIPTION OF THE ITEM INDICATED WILL BE FOUND. THE LETTER SUFFIX OF THE KEYNOTE DOES NOT RELATE TO ANY CORRESPONDING REFERENCE LETTER IN THE SPECIFICATION. KEYNOTES DO NOT DESCRIBE CONSTRUCTION MEANS, METHODS, TECHNIQUES, SEQUENCES, OR PROCEDURES. NO TRADE JURISDICTIONAL ALLOCATION OF THIS WORK IS INTENDED BY THE SUBDIVISION OF THESE KEYNOTES. IT SHALL BE THE CONTRACTOR'S SOLE RESPONSIBILITY TO SUBDIVIDE THE WORK IN THE MANNER HE DEEMS NECESSARY.

DIVISION 2 - SITEWORK

02070.AA	REMOVE EXISTING ITEM
02070.AC	EXISTING ITEM TO REMAIN
02070.BB	REMOVE EXISTING NON-BEARING PARTITION
02070.BD	REMOVE EXISTING DOOR AND FRAME
02070.EA	REMOVE EXISTING BASE CABINET AND SINK
02070.EC	REMOVE EXISTING CASEWORK
02070.EG	REMOVE EXISTING SINK
02070.EH	REMOVE EXISTING LOCKERS
02070.FA	REMOVE EXISTING PLUMBING FIXTURES, PARTITIONS AND ACCESSORIES
02070.FB	REMOVE EXISTING PLUMBING FIXTURES
02070.FF	REMOVE EXISTING PARTIAL HEIGHT WALL

DEMOLITION LEGEND

- AREA OF CONCRETE SLAB TO BE REMOVED
- DOOR TO BE REMOVED FRAME TO REMAIN U.N.O.
- EXISTING DOOR TO REMAIN
- EXISTING NON-BEARING, NON-SHEAR WALL TO BE REMOVED. CURB TO BE REMOVED WHERE OCCURS
- EXISTING PARTITION WALL TO REMAIN

1. FLOORS:
REMOVE (E) FLOORING, REMOVE (E) WALL BASE, PREPARE TO RECEIVE NEW FINISH, U.N.O.
SEE FINISH SCHEDULE (A011-A012)

2. DOORS:
REMOVE (E) DOORS AND HARDWARE, U.N.O.
(E) HOLLOW METAL & INTERIOR FRAMES TO REMAIN, U.N.O.
SEE DOOR SCHEDULES (A013-A015.2)

3. CASEWORK:
(E) CASEWORK TO REMAIN, U.N.O.
REMOVE ALL (E) COUNTER TOPS & BACKSPLASHES, U.N.O.

4. WINDOWS:
REMOVE ALL (E) EXTERIOR WINDOWS AND FRAMES, U.N.O.

5. WINDOW COVERINGS:
REMOVE, CLEAN & REINSTALL (E) WINDOW COVERINGS.

6. ACCESSORIES:
REMOVE ALL EXISTING CHALKBOARDS, TACKBOARDS AND MARKERBOARDS U.N.O. REMOVE PROJECTION SCREENS AND REINSTALL ABOVE (N) WHITEBOARD.

7. CEILINGS:
REMOVE (E) ACOUSTICAL CEILING TILES, REMOVE SPRAY-ON ACOUSTIC CEILINGS, U.N.O.
REMOVE (E) CEILING ACCESS PANELS, U.N.O.

8. ACOUSTIC WALL TREATMENT:
REMOVE ALL ACOUSTIC WALL TILE AND SPRAY-ON ACOUSTIC TREATMENT. PREPARE WALL FOR (N) FINISH SURFACE.

9. TOILET ROOMS:
REMOVE EXISTING FIXTURES, ACCESSORIES, TERRAZZO, CERAMIC TILE, & PLASTER WALL, CEILING AND FLOOR FINISHES, U.N.O. REMOVE (E) FINISH SUBSTRATES, U.N.O.

10. REMOVE (E) ELECTRICAL SURFACE MOUNTED RACEWAYS.

11. REFER TO MECHANICAL, PLUMBING AND ELECTRICAL DWGS FOR ADDITIONAL DEMOLITION NOTES & INFORMATION.

12. REFER TO PLUMBING AND ELECTRICAL DWGS FOR (E) CLASSROOMS SLAB TRENCHING LOCATIONS.

KEY PLAN

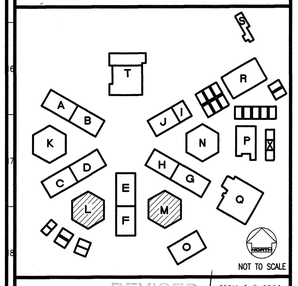

REVISED MAY 12 2004

IDENTIFICATION STAMP
DIV. OF THE STATE ARCHITECT
OFFICE OF REGULATION SERVICES
FILE NO. 19-H51
APPL. NO. 03-106434
AC. FLS. SS.
DATE

Dougherty + Dougherty
Architecture • Planning • Interior Design
3194-D Airport Loop Drive
Costa Mesa, CA 92626
(714) 427-0277

Copyright © 2002 Dougherty + Dougherty

Architect Seal

Consultant Seal

LA MIRADA HIGH SCHOOL
MODERNIZATION
NORWALK - LA MIRADA UNIFIED SCHOOL DISTRICT
13520 ADELFA DRIVE LA MIRADA, CA 90638

CLASSROOM BUILDINGS L & M
DEMO PLANS

Date:	04-01-04
Job:	20237.50
Scale:	AS NOTED
Drawn:	
Revisions:	

AD104

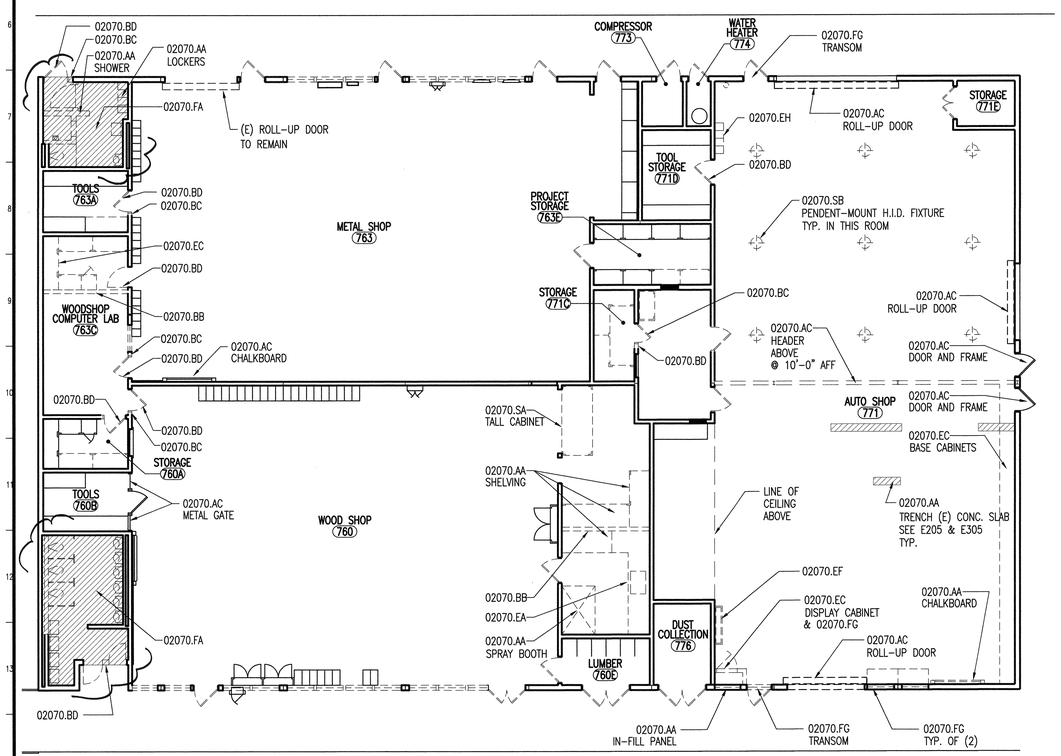

BUILDING R DEMOLITION PLAN
SHOP BUILDING
L19
1/8"=1'-0"

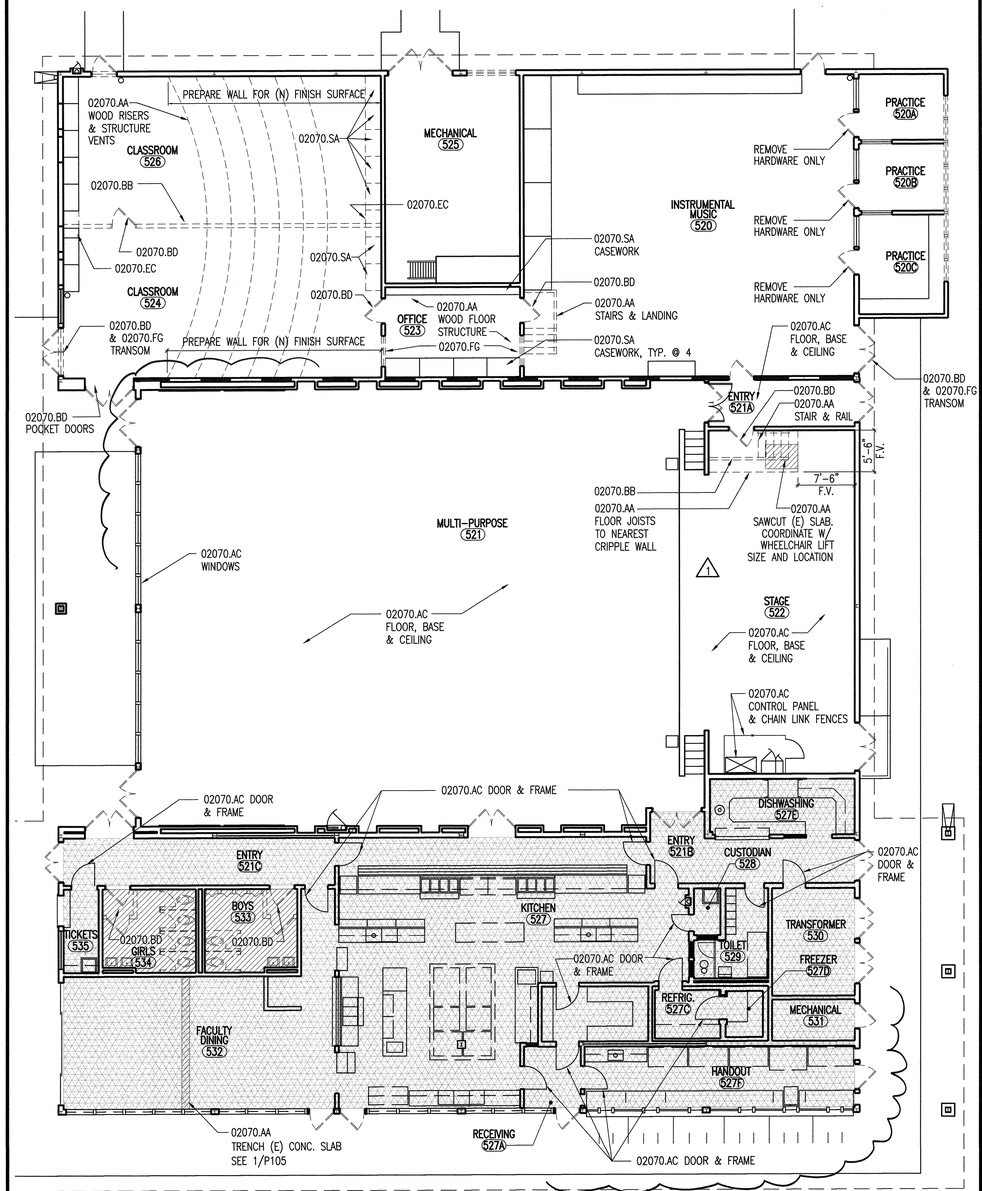

BUILDING T DEMOLITION PLAN
MULTI-PURPOSE BUILDING
A19
1/8"=1'-0"

KEYNOTES

KEYNOTES REFERENCE SPECIFICATION SECTIONS BY MEANS OF A FIVE-DIGIT NUMBER IDENTIFYING THE SECTION WHERE A MORE COMPLETE DESCRIPTION OF THE ITEM INDICATED WILL BE FOUND. THE LETTER SUFFIX OF THE KEYNOTE DOES NOT RELATE TO ANY CORRESPONDING REFERENCE LETTER IN THE SPECIFICATION. KEYNOTES DO NOT DESCRIBE CONSTRUCTION MEANS, METHODS, TECHNIQUES, SEQUENCES, OR PROCEDURES. NO TRADE JURISDICTIONAL ALLOCATION OF THIS WORK IS INTENDED BY THE SUBDIVISION OF THESE KEYNOTES. IT SHALL BE THE CONTRACTOR'S SOLE RESPONSIBILITY TO SUBDIVIDE THE WORK IN THE MANNER HE DEEMS NECESSARY.

DIVISION 2 – SITEWORK

02070.AA	REMOVE EXISTING ITEM
02070.AC	EXISTING ITEM TO REMAIN
02070.BB	REMOVE EXISTING NON-BEARING PARTITION
02070.BC	REMOVE EXISTING PORTION OF WALL FOR NEW DOOR
02070.BD	REMOVE EXISTING DOOR AND FRAME
02070.EA	REMOVE EXISTING BASE CABINET AND SINK
02070.EC	REMOVE EXISTING CASEWORK
02070.EF	REMOVE EXISTING DRINKING FOUNTAIN
02070.EH	REMOVE EXISTING LOCKERS
02070.FA	REMOVE EXISTING PLUMBING FIXTURES, PARTITIONS AND ACCESSORIES
02070.FG	REMOVE EXISTING WINDOWS AND FRAMES
02070.SA	SALVAGE ITEM – REUSE IN NEW WORK
02070.SB	REMOVE AND SALVAGE ITEM – RETURN TO THE DISTRICT

DEMOLITION LEGEND

- AREA OF CONCRETE SLAB TO BE REMOVED
- DOOR TO BE REMOVED FRAME TO REMAIN U.N.O.
- EXISTING DOOR TO REMAIN
- EXISTING NON-BEARING, NON-SHEAR WALL TO BE REMOVED. CURB TO BE REMOVED WHERE OCCURS
- EXISTING PARTITION WALL TO REMAIN
- NOT IN CONTRACT U.N.O.

1. FLOORS:
REMOVE (E) FLOORING, REMOVE (E) WALL BASE, PREPARE TO RECEIVE NEW FINISH, U.N.O.
SEE FINISH SCHEDULE (A011–A012)

2. DOORS:
REMOVE (E) DOORS AND HARDWARE, U.N.O.
(E) HOLLOW METAL & INTERIOR FRAMES TO REMAIN, U.N.O.
SEE DOOR SCHEDULES (A013–A015.2)

3. CASEWORK:
(E) CASEWORK TO REMAIN, U.N.O.
REMOVE ALL (E) COUNTER TOPS & BACKSPLASHES, U.N.O.

4. WINDOWS:
REMOVE ALL (E) EXTERIOR WINDOWS AND FRAMES, U.N.O.

5. WINDOW COVERINGS:
REMOVE, CLEAN & REINSTALL (E) WINDOW COVERINGS.

6. ACCESSORIES:
REMOVE ALL EXISTING CHALKBOARDS, TACKBOARDS AND MARKERBOARDS U.N.O. REMOVE PROJECTION SCREENS AND REINSTALL ABOVE (N) WHITEBOARD.

7. CEILINGS:
REMOVE (E) ACOUSTICAL CEILING TILES, REMOVE SPRAY-ON ACOUSTIC CEILINGS, U.N.O.
REMOVE (E) CEILING ACCESS PANELS, U.N.O.

8. ACOUSTIC WALL TREATMENT:
REMOVE ALL ACOUSTIC WALL TILE AND SPRAY-ON ACOUSTIC TREATMENT. PREPARE WALL FOR (N) FINISH SURFACE.

9. TOILET ROOMS:
REMOVE EXISTING FIXTURES, ACCESSORIES, TERRAZZO, CERAMIC TILE, & PLASTER WALL, CEILING AND FLOOR FINISHES, U.N.O. REMOVE (E) FINISH SUBSTRATES, U.N.O.

10. REMOVE (E) ELECTRICAL SURFACE MOUNTED RACEWAYS.

11. REFER TO MECHANICAL, PLUMBING AND ELECTRICAL DWGS FOR ADDITIONAL DEMOLITION NOTES & INFORMATION.

12. REFER TO PLUMBING AND ELECTRICAL DWGS FOR (E) CLASSROOMS SLAB TRENCHING LOCATIONS.

KEY PLAN

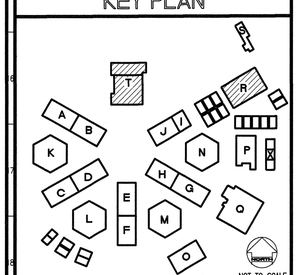

REVISED
MAY 1 2 2004

IDENTIFICATION STAMP
DIV. OF THE STATE ARCHITECT
OFFICE OF REGULATION SERVICES
FILE NO. 19-H51
APPL. NO. 03-106434
AC. FLS. NT SS.
DATE

Dougherty + Dougherty
Architecture · Planning · Interior Design
2728 Newport Blvd.
Costa Mesa, CA 92626
(714) 427-0277

Copyright © 2002 Dougherty + Dougherty

CERTIFIED VERIFIED DOUGHERTY ROOT C-9824 SITE OF CALIFORNIA
Architect Seal

Consultant Seal

LA MIRADA HIGH SCHOOL MODERNIZATION
NORWALK - LA MIRADA UNIFIED SCHOOL DISTRICT
13520 ADELFA DRIVE LA MIRADA, CA 90638

BUILDINGS R & T DEMO PLANS

Date:	04-01-04
Job:	20237.50
Scale:	AS NOTED
Drawn:	
Revisions:	
1	12-01-03

AD105

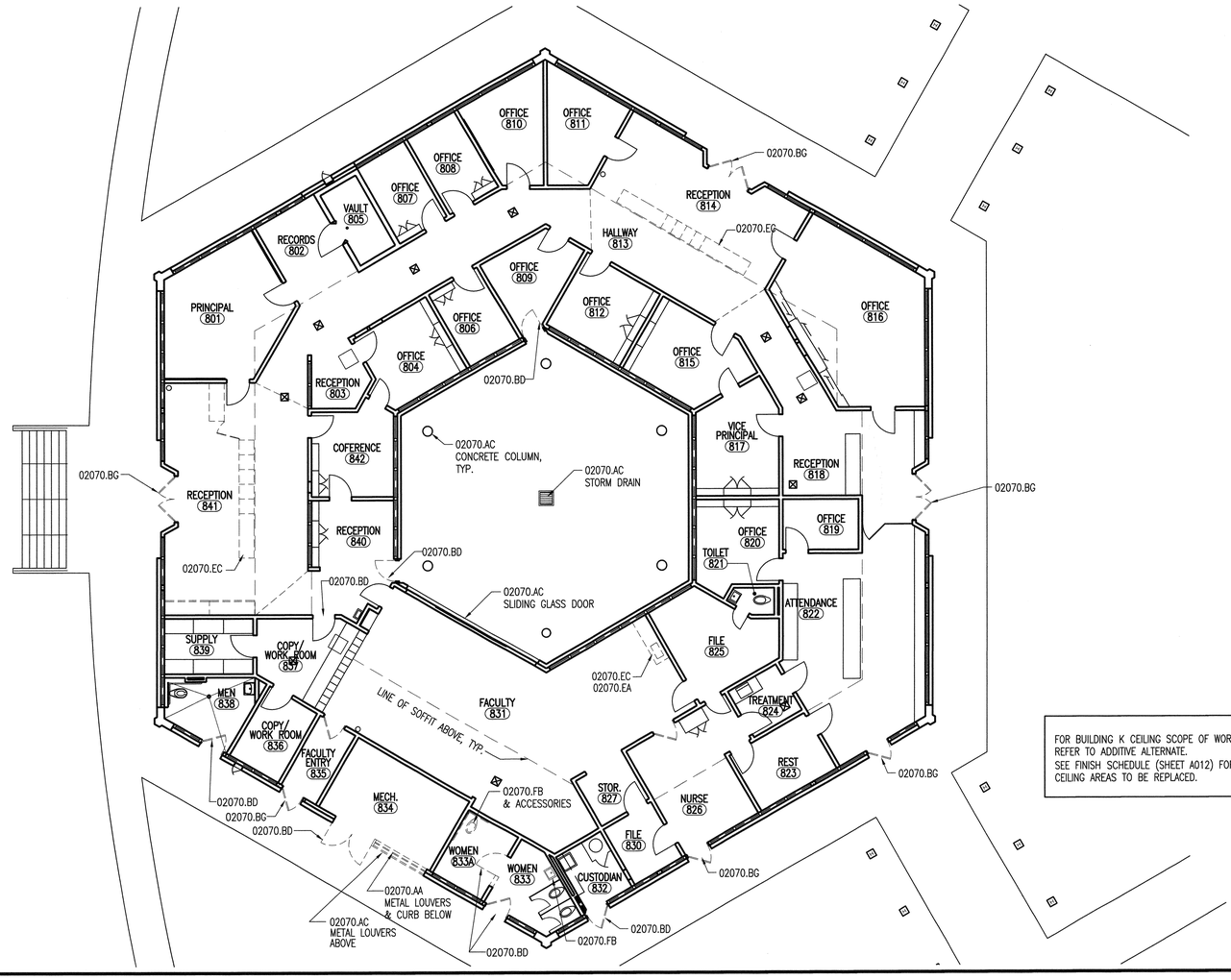

FOR BUILDING K CEILING SCOPE OF WORK, REFER TO ADDITIVE ALTERNATE.
SEE FINISH SCHEDULE (SHEET A012) FOR CEILING AREAS TO BE REPLACED.

BUILDING K DEMO PLAN

ADMINISTRATION BUILDING

A19

1/8"=1'-0"

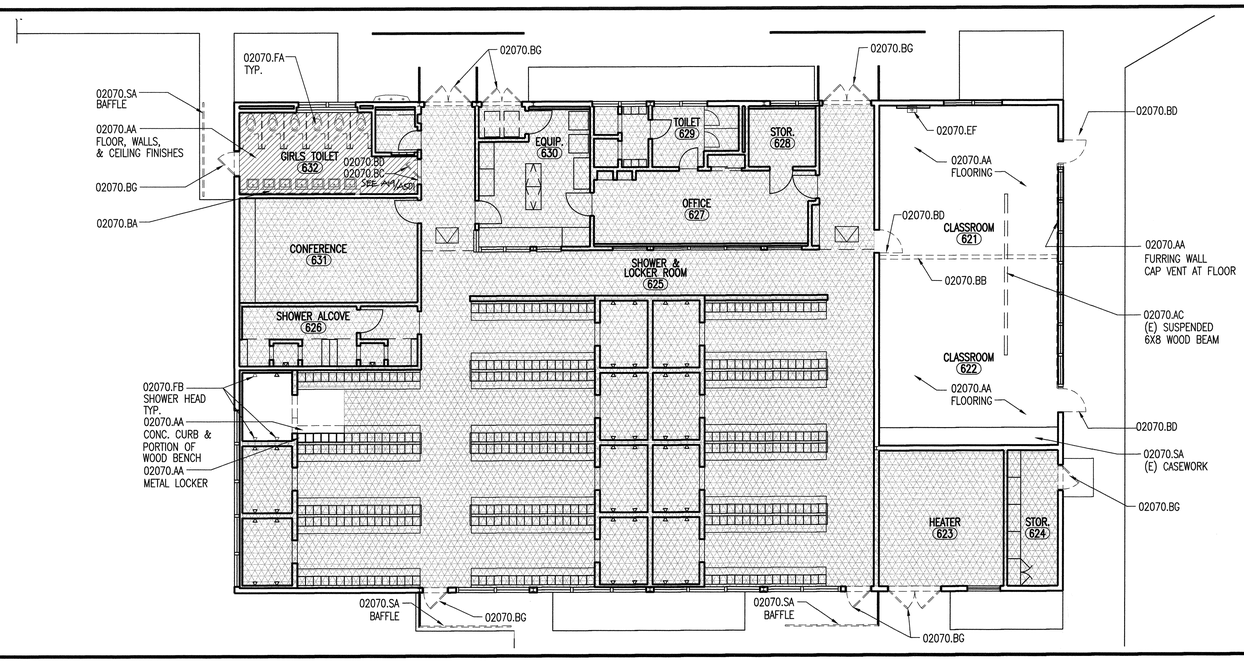

BUILDING O DEMO PLAN

GIRLS LOCKER BUILDING

A19

1/8"=1'-0"

KEYNOTES

KEYNOTES REFERENCE SPECIFICATION SECTIONS BY MEANS OF A FIVE-DIGIT NUMBER IDENTIFYING THE SECTION WHERE A MORE COMPLETE DESCRIPTION OF THE ITEM INDICATED WILL BE FOUND. THE LETTER SUFFIX OF THE KEYNOTE DOES NOT RELATE TO ANY CORRESPONDING REFERENCE LETTER IN THE SPECIFICATION. KEYNOTES DO NOT DESCRIBE CONSTRUCTION MEANS, METHODS, TECHNIQUES, SEQUENCES, OR PROCEDURES. NO TRADE JURISDICTIONAL ALLOCATION OF THIS WORK IS INTENDED BY THE SUBDIVISION OF THESE KEYNOTES. IT SHALL BE THE CONTRACTOR'S SOLE RESPONSIBILITY TO SUBDIVIDE THE WORK IN THE MANNER HE DEEMS NECESSARY.

DIVISION 2 – SITEWORK

02070.AA REMOVE EXISTING ITEM
02070.FB REMOVE EXISTING PLUMBING FIXTURES

DEMOLITION LEGEND

- AREA OF CONCRETE SLAB TO BE REMOVED
- DOOR TO BE REMOVED FRAME TO REMAIN U.N.O.
- EXISTING DOOR TO REMAIN
- EXISTING NON-BEARING, NON-SHEAR WALL TO BE REMOVED. CURB TO BE REMOVED WHERE OCCURS
- EXISTING PARTITION WALL TO REMAIN
- N.I.C., U.N.O.

1. (E) ITEMS TO REMAIN, U.N.O.

2. FLOORS:
(E) FLOOR & FLOOR BASE TO REMAIN, U.N.O.
(REFER TO FINISH SCHEDULE – SHEET A011 & A012)

3. DOORS:
(E) DOORS & FRAMES TO REMAIN, U.N.O.
SEE DOOR SCHEDULES (A013–A015.2)

4. CASEWORK:
(E) CASEWORK TO REMAIN, U.N.O.
REFER TO FLOOR PLANS FOR FINISHING.

5. WINDOWS:
(E) WINDOWS & FRAMES TO REMAIN, U.N.O.

6. WINDOW COVERINGS:
(E) WINDOW COVERINGS TO REMAIN, U.N.O.

8. CEILINGS:
(E) CEILING TO REMAIN, U.N.O.

9. ACOUSTIC WALL TREATMENT:
(E) ACOUSTIC WALL TREAMENT TO REMAIN, U.N.O.

10. TOILET ROOMS:
(E) TOILET FIXTURES, ACCESSORIES, FLOORS AND BASES TO REMAIN, U.N.O.

11. (E) ELECTRICAL ITEMS TO REMAIN, U.N.O.
SEE ELECTRICAL DRAWINGS FOR ITEMS TO BE REPLACED.

12. REFER TO MECHANICAL, PLUMBING AND ELECTRICAL DWGS FOR ADDITIONAL DEMOLITION NOTES & INFORMATION.

KEY PLAN

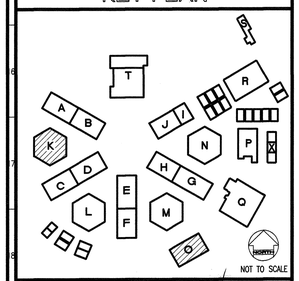

REVISED: MAY 12 2004

IDENTIFICATION STAMP
DIV. OF THE STATE ARCHITECT
OFFICE OF REGULATION SERVICES
FILE NO. 19-H51
APPL. NO. 03-106434
AC. BW FLS. NT SS
DATE

Dougherty + Dougherty
Architecture • Planning • Interior Design
3536 Concours, Suite 100
Ontario, CA 91764
(714) 427-0277

Copyright © 2002 Dougherty + Dougherty

Consultant Seal

Architect Seal

LA MIRADA HIGH SCHOOL
MODERNIZATION
NORWALK - LA MIRADA UNIFIED SCHOOL DISTRICT
13520 ADELFA DRIVE LA MIRADA, CA 90638

BUILDINGS
K & O
DEMO PLANS

Date:	04-01-04
Job:	20237.50
Scale:	AS NOTED
Drawn:	
Revisions:	
1	12-01-03

AD106

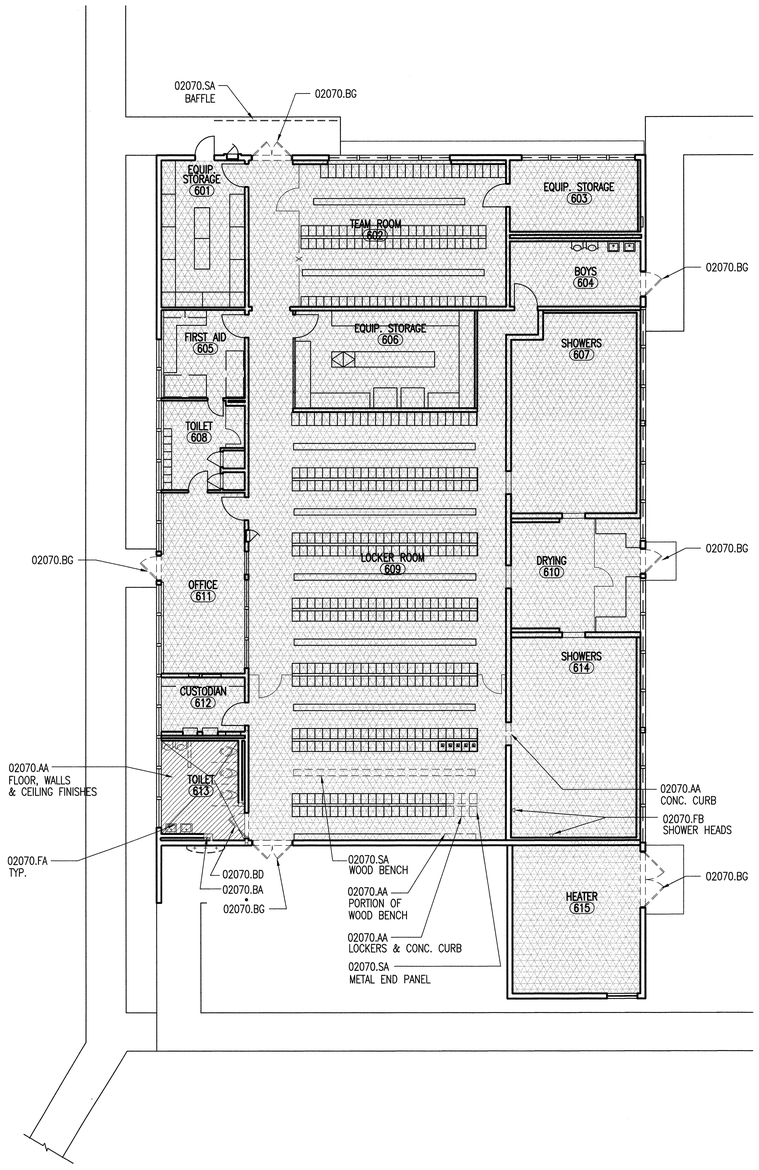

BUILDING P DEMOLITION PLAN

BOYS LOCKER ROOM BUILDING

P19

1/8"=1'-0"

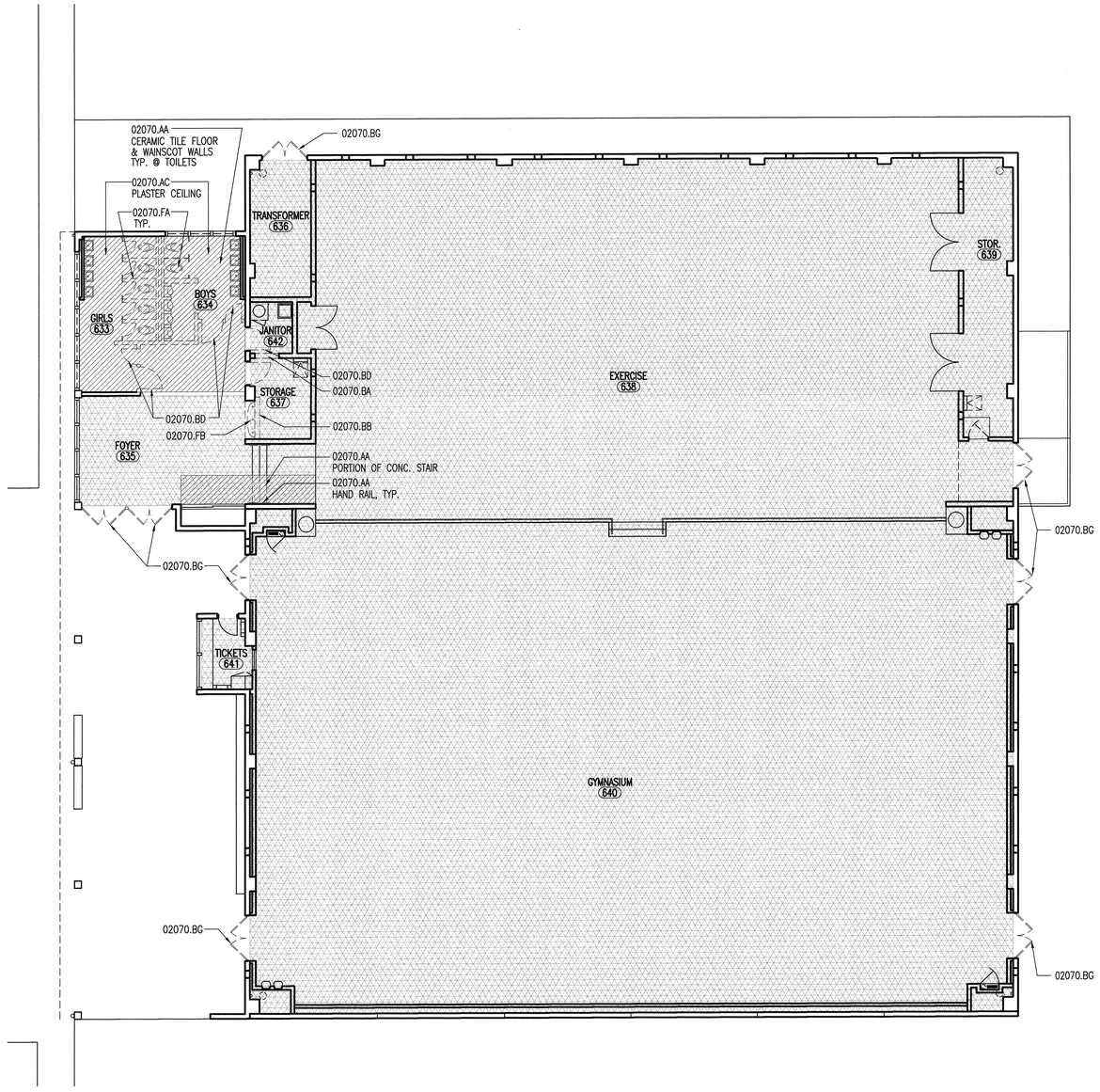

BUILDING Q DEMOLITION PLAN

GYMNASIUM BUILDING

A19

1/8"=1'-0"

KEYNOTES

KEYNOTES REFERENCE SPECIFICATION SECTIONS BY MEANS OF A FIVE-DIGIT NUMBER IDENTIFYING THE SECTION WHERE A MORE COMPLETE DESCRIPTION OF THE ITEM INDICATED WILL BE FOUND. THE LETTER SUFFIX OF THE KEYNOTE DOES NOT RELATE TO ANY CORRESPONDING REFERENCE LETTER IN THE SPECIFICATION. KEYNOTES DO NOT DESCRIBE CONSTRUCTION MEANS, METHODS, TECHNIQUES, SEQUENCES, OR PROCEDURES. NO TRADE JURISDICTIONAL ALLOCATION OF THIS WORK IS INTENDED BY THE SUBDIVISION OF THESE KEYNOTES. IT SHALL BE THE CONTRACTOR'S SOLE RESPONSIBILITY TO SUBDIVIDE THE WORK IN THE MANNER HE DEEMS NECESSARY.

DIVISION 2 – SITEWORK

02070.AA	REMOVE EXISTING ITEM
02070.AC	EXISTING ITEM TO REMAIN
02070.BA	REMOVE EXISTING PORTION OF WALL
02070.BB	REMOVE EXISTING NON-BEARING PARTITION
02070.BD	REMOVE EXISTING DOOR AND FRAME
02070.BG	REMOVE EXISTING DOOR, FRAME TO REMAIN
02070.FA	REMOVE EXISTING PLUMBING FIXTURES, PARTITIONS AND ACCESSORIES
02070.FB	REMOVE EXISTING PLUMBING FIXTURES
02070.SA	SALVAGE ITEM – REUSE IN NEW WORK

DEMOLITION LEGEND

- AREA OF CONCRETE SLAB TO BE REMOVED
- DOOR TO BE REMOVED FRAME TO REMAIN U.N.O.
- EXISTING DOOR TO REMAIN
- EXISTING NON-BEARING, NON-SHEAR WALL TO BE REMOVED. CURB TO BE REMOVED WHERE OCCURS
- EXISTING PARTITION WALL TO REMAIN
- N.I.C., U.N.O.

1. (E) ITEMS TO REMAIN, U.N.O.

2. FLOORS:
(E) FLOOR & FLOOR BASE TO REMAIN, U.N.O.
(REFER TO FINISH SCHEDULE – SHEET A011 & A012)

3. DOORS:
(E) DOORS & FRAMES TO REMAIN, U.N.O.
SEE DOOR SCHEDULES (A013–A015.2)

4. CASEWORK:
(E) CASEWORK TO REMAIN, U.N.O.
REFER TO FLOOR PLANS FOR FINISHING.

5. WINDOWS:
(E) WINDOWS & FRAMES TO REMAIN, U.N.O.

6. WINDOW COVERINGS:
(E) WINDOW COVERINGS TO REMAIN, U.N.O.

8. CEILINGS:
(E) CEILING TO REMAIN, U.N.O.

9. ACOUSTIC WALL TREATMENT:
(E) ACOUSTIC WALL TREAMENT TO REMAIN, U.N.O.

10. TOILET ROOMS:
(E) TOILET FIXTURES, ACCESSORIES, FLOORS AND BASES TO REMAIN, U.N.O.

11. (E) ELECTRICAL ITEMS TO REMAIN, U.N.O.
SEE ELECTRICAL DRAWINGS FOR ITEMS TO BE REPLACED.

12. REFER TO MECHANICAL, PLUMBING AND ELECTRICAL DWGS FOR ADDITIONAL DEMOLITION NOTES & INFORMATION.

KEY PLAN

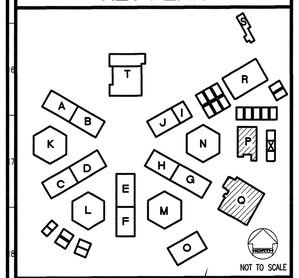

NOT TO SCALE

REVISED

IDENTIFICATION STAMP
DIV. OF THE STATE ARCHITECT
OFFICE OF REGULATION SERVICES
FILE NO. 19-H51
APPL. NO. 03-106434
AC. ____ FLS. NLT SS. ____
DATE ____

MAY 1 9 2004

Dougherty ■ Dougherty
Architecture · Planning · Interior Design
3194-D Airport Loop Drive
Costa Mesa, CA 92626
(714) 427-0277

Copyright © 2002 Dougherty + Dougherty

Consultant Seal

Architect Seal

LA MIRADA HIGH SCHOOL
MODERNIZATION
NORWALK - LA MIRADA UNIFIED SCHOOL DISTRICT
13320 ADELFA DRIVE LA MIRADA, CA 90638

BUILDINGS
P & Q
DEMO PLANS

Date:	04-01-04
Job:	20237.50
Scale:	AS NOTED
Drawn:	
Revisions:	
1	12-01-03

AD107

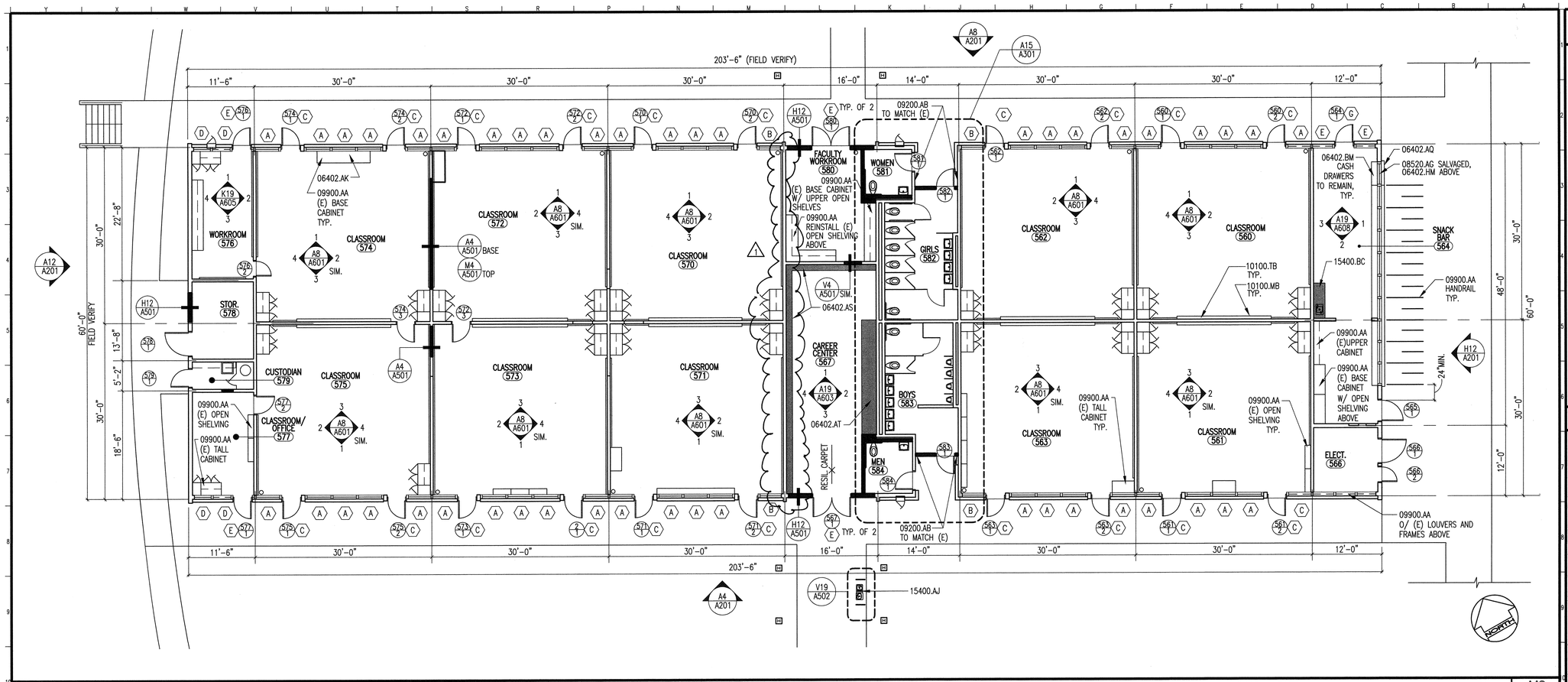

BUILDING A-B FLOOR PLAN

550 BUILDING

A10

1/8"=1'-0"

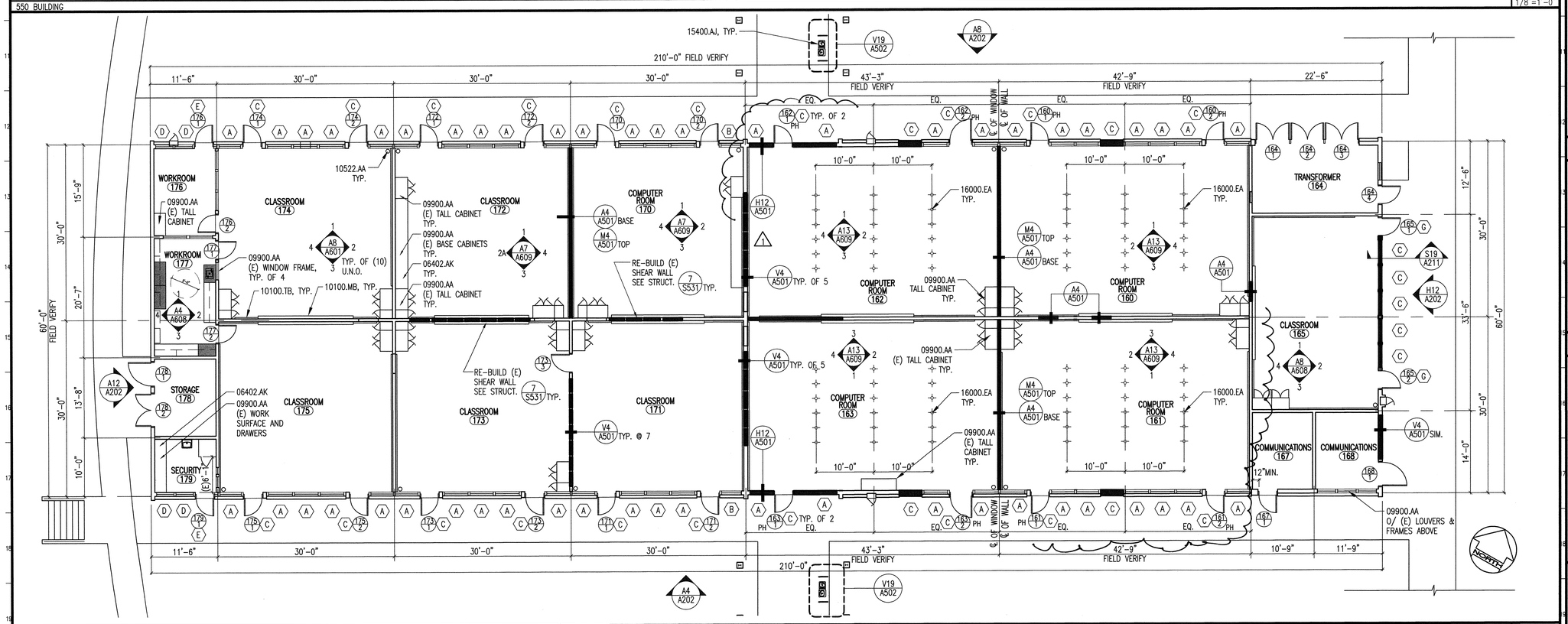

BUILDING C-D FLOOR PLAN

150 BUILDING

A19

1/8"=1'-0"

KEYNOTES

KEYNOTES REFERENCE SPECIFICATION SECTIONS BY MEANS OF A FIVE-DIGIT NUMBER IDENTIFYING THE SECTION WHERE A MORE COMPLETE DESCRIPTION OF THE ITEM INDICATED WILL BE FOUND. THE LETTER SUFFIX OF THE KEYNOTE DOES NOT RELATE TO ANY CORRESPONDING REFERENCE LETTER IN THE SPECIFICATION. KEYNOTES DO NOT DESCRIBE CONSTRUCTION MEANS, METHODS, TECHNIQUES, SEQUENCES, OR PROCEDURES. NO TRADE JURISDICTIONAL ALLOCATION OF THIS WORK IS INTENDED BY THE SUBDIVISION OF THESE KEYNOTES. IT SHALL BE THE CONTRACTOR'S SOLE RESPONSIBILITY TO SUBDIVIDE THE WORK IN THE MANNER HE DEEMS NECESSARY.

DIVISION 6 – WOOD & PLASTICS

06402.AK	PLASTIC LAMINATE COUNTER TOP W/ COVED BACKSPLASH
06402.AQ	STAINLESS STEEL SERVICE COUNTER
06402.AS	OPEN SHELVING
06402.AT	ACCESSIBLE PLASTIC LAMINATE WORKSURFACE
06402.BM	PLASTIC LAMINATE COUNTER TOP
06402.HM	HARDWOOD FILLER PANEL

DIVISION 8 – DOORS & WINDOWS

08520.AG	ALUMINUM SLIDING SERVICE WINDOW

DIVISION 9 – FINISHES

09200.AB	EXTERIOR PLASTER
09900.AA	PAINT FINISH

DIVISION 10 – SPECIALTIES

10100.MB	MARKERBOARD
10100.TB	TACKBOARD
10522.AA	FIRE EXTINGUISHER

DIVISION 15 – MECHANICAL

15400.AJ	ACCESSIBLE HI-LO DRINKING FOUNTAIN – SEE PLUMBING
15400.BC	SINK – SEE PLUMBING

DIVISION 16 – ELECTRICAL

16000.EA	FLOOR RECEPTACLE – SEE ELECTRICAL DRAWINGS

CONSTRUCTION NOTES

ALL DIMENSIONS TO (E) CONSTRUCTION ARE TO BE FIELD VERIFIED. CONTRACTOR SHALL INFORM ARCHITECT OF ANY SUBSTANTIAL DISCREPANCY BETWEEN FIELD DIMENSIONS AND DRAWINGS.

1) FOR TYP. SYMBOLS & ABBREVIATIONS, SEE SHEET G002
2) ALL ITEMS NOTED ARE NEW U.N.O.
3) PROTECT AND SAFEGUARD FROM DAMAGE ALL (E) FINISHES TO REMAIN.
4) FOR TYP. STUD WALL FRAMING & CONNECTIONS TO STRUCTURE, SEE SHEET A501.
5) PROVIDE SEALANT MATERIAL AT ALL PENETRATIONS THROUGH NEW & (E) WALLS AND HARD CEILINGS.
6) PATCH, RESURFACE & PAINT (E) WALLS DAMAGED BY CONSTRUCTION TO MATCH ADJACENT SURFACES.
7) DOORS & DOOR FRAMES:
   REPLACE ALL DOORS AND HARDWARE, U.N.O.
   (E) DOOR FRAMES TO REMAIN, U.N.O.
   REFER TO DOOR SCHEDULE SHEETS A012–A015.
8) WINDOWS:
   REPLACE ALL EXT. WINDOWS AND FRAMES, U.N.O.
   REFER TO WINDOW SCHEDULE SHEET A016.
9) CASEWORK:
   REPLACE (E) COUNTERTOPS WITH NEW PLASTIC LAMINATE COUNTERTOPS U.N.O. SAND, STRIP, PATCH AND PAINT INTERIOR AND EXTERIOR OF ALL (E) CASEWORK TO REMAIN. REPLACE DAMAGED OR MISSING DOORS. SOLVENT CLEAN AND REUSE ALL (E) HARDWARE. PROVIDE NEW HARDWARE TO MATCH (E) WHERE MISSING.
10) LOCATE NEW MARKERBOARDS AND TACKBOARDS AS INDICATED ON THE PLANS AND INTERIOR ELEVATIONS.
11) TOILET ROOMS:
   PROVIDE NEW FIXTURES, FINISHES, PARTITIONS & ACCESSORIES U.N.O., COORDINATE WITH PLUMB. DWGS.
12) PROVIDE FIRE EXTINGUISHERS PER SPECIFICATIONS SECTION 10522

WALL LEGEND

- EXISTING WALL TO REMAIN
- NEW NON RATED WOOD STUD WALL
  EXT.: 2X6 @ 16" O.C. INFILL WALL W/ EXTERIOR: PLASTER TO MATCH EXISTING INTERIOR: SEE FINISH SCHEDULE
  INT.: 2X6 @ 16" O.C. INFILL WALL W/ FINISH PER FINISH SCHEDULE
  REFER TO SHEET A501 FOR ADDITIONAL INFORMATION
- NEW 1-HR RATED WOOD STUD WALL
  REFER TO SHEET A501 FOR ADDITIONAL INFORMATION
- NEW CASEWORK
  SEE INT. ELEVS. FOR ADDITIONAL INFORMATION

KEY PLAN

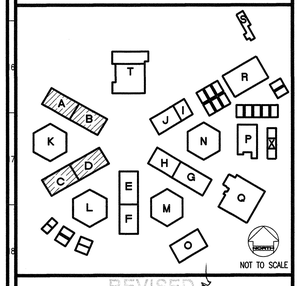

REVISED MAY 1 2 2004

IDENTIFICATION STAMP
DIV. OF THE STATE ARCHITECT
OFFICE OF REGULATION SERVICES
FILE NO. 19-H51
APPL. NO. 03-106434
AC. FLS. SS.
DATE

Dougherty + Dougherty
Architecture • Planning • Interior Design
2156-D Airport Long Drive
Santa Ana, CA 92705
(714) 427-0277

Copyright © 2002 Dougherty + Dougherty

LICENSED ARCHITECT
JAMES R. DOUGHERTY
No. C-9824
STATE OF CALIFORNIA
Architect Seal

Consultant Seal

LA MIRADA HIGH SCHOOL
MODERNIZATION
NORWALK - LA MIRADA UNIFIED SCHOOL DISTRICT
13520 ADELFA DRIVE LA MIRADA, CA 90638

CLASSROOM BUILDINGS A-B & C-D FLOOR PLANS

Date:	04-01-04
Job:	20237.50
Scale:	AS NOTED
Drawn:	
Revisions:	
1	12-01-03

A101

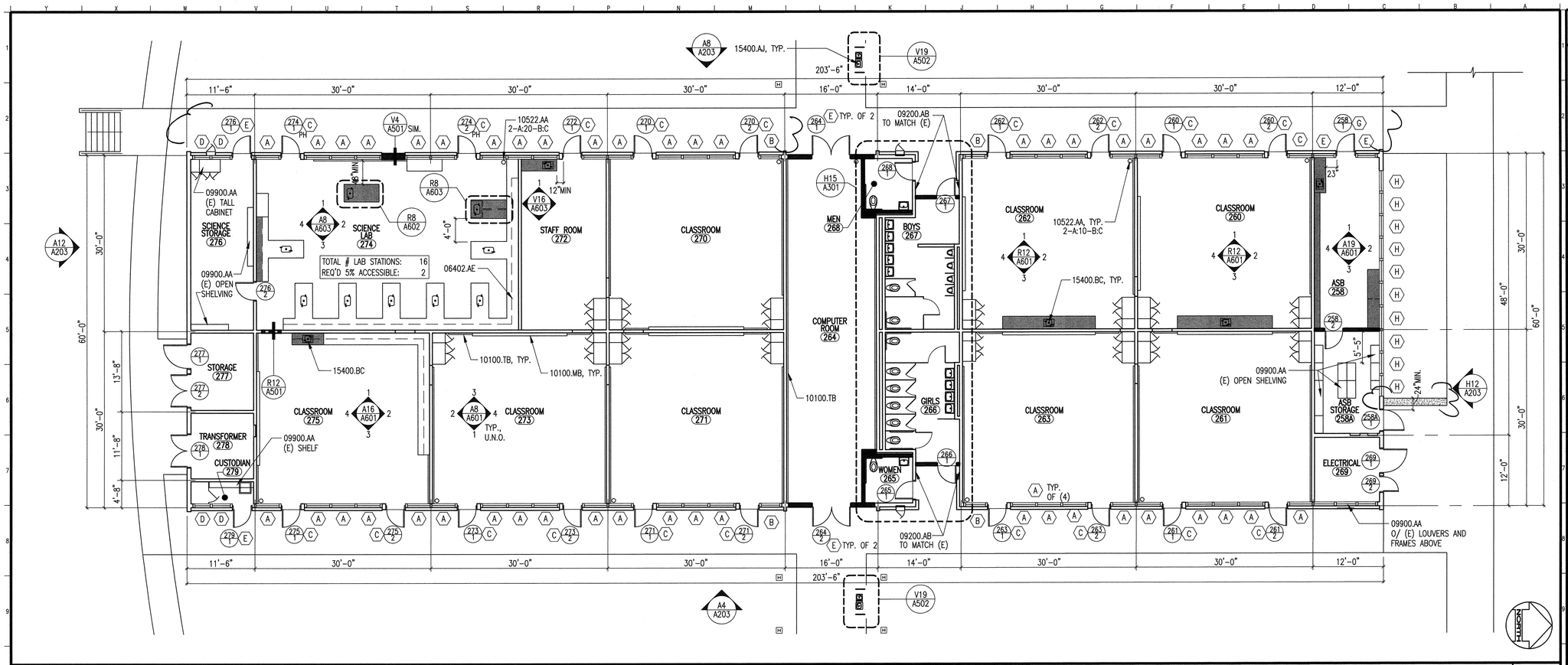

BUILDING E-F FLOOR PLAN
250 BUILDING
A10
1/8"=1'-0"

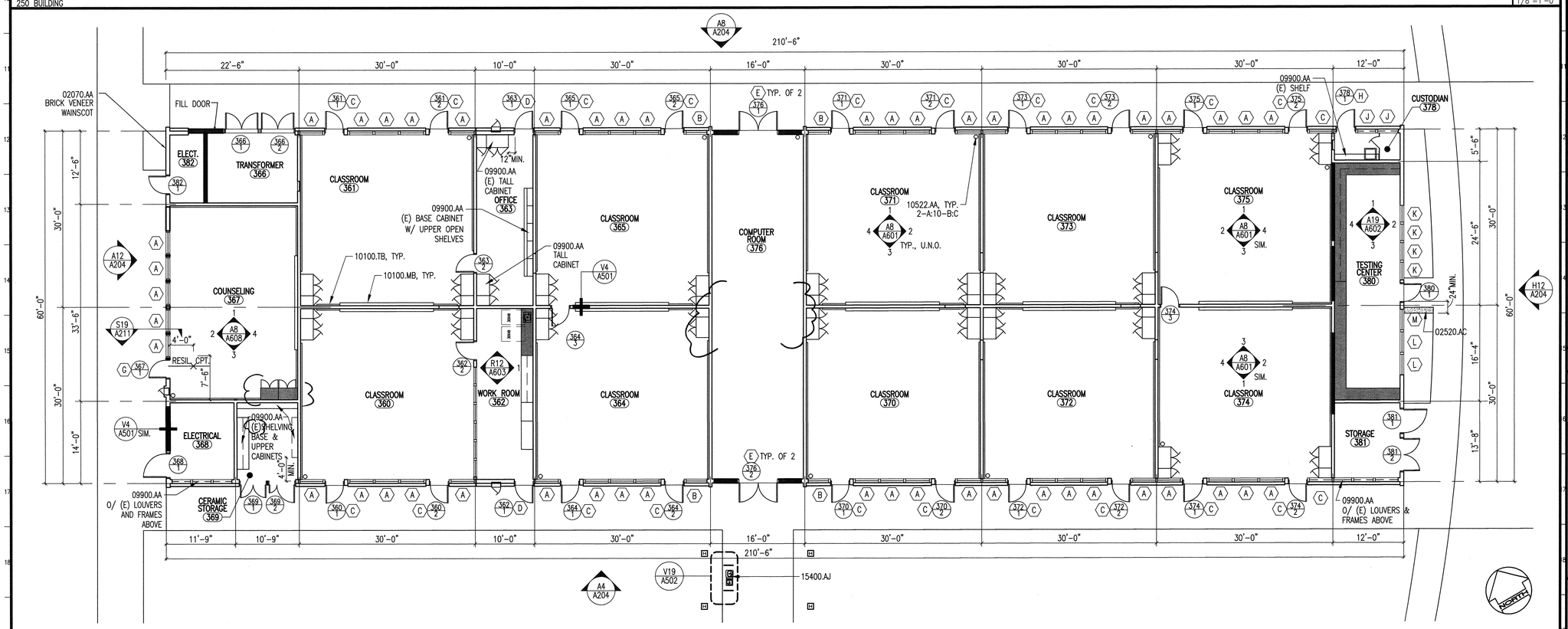

BUILDING G-H FLOOR PLAN
350 BUILDING
A19
1/8"=1'-0"

KEYNOTES

KEYNOTES REFERENCE SPECIFICATION SECTIONS BY MEANS OF A FIVE-DIGIT NUMBER IDENTIFYING THE SECTION WHERE A MORE COMPLETE DESCRIPTION OF THE ITEM INDICATED WILL BE FOUND. THE LETTER SUFFIX OF THE KEYNOTE DOES NOT RELATE TO ANY CORRESPONDING REFERENCE LETTER IN THE SPECIFICATION. KEYNOTES DO NOT DESCRIBE CONSTRUCTION MEANS, METHODS, TECHNIQUES, SEQUENCES, OR PROCEDURES. NO TRADE JURISDICTIONAL ALLOCATION OF THIS WORK IS INTENDED BY THE SUBDIVISION OF THESE KEYNOTES. IT SHALL BE THE CONTRACTOR'S SOLE RESPONSIBILITY TO SUBDIVIDE THE WORK IN THE MANNER HE DEEMS NECESSARY.

DIVISION 2 - SITEWORK

02070.AA REMOVE EXISTING ITEM
02520.AC CONCRETE PAVING - NON-SLIP BROOM FINISH TO MATCH EXISTING

DIVISION 6 - WOOD & PLASTICS

06402.AE PLASTIC LAMINATE UPPER CABINET

DIVISION 9 - FINISHES

09200.AB EXTERIOR PLASTER
09900.AA PAINT FINISH

DIVISION 10 - SPECIALTIES

10100.MB MARKERBOARD
10100.TB TACKBOARD
10522.AA FIRE EXTINGUISHER

DIVISION 15 - MECHANICAL

15400.AJ ACCESSIBLE HI-LO DRINKING FOUNTAIN - SEE PLUMBING
15400.BC SINK - SEE PLUMBING

CONSTRUCTION NOTES

ALL DIMENSIONS TO (E) CONSTRUCTION ARE TO BE FIELD VERIFIED. CONTRACTOR SHALL INFORM ARCHITECT OF ANY SUBSTANTIAL DISCREPANCY BETWEEN FIELD DIMENSIONS AND DRAWINGS.

1) FOR TYP. SYMBOLS & ABBREVIATIONS, SEE SHEET G002
2) ALL ITEMS NOTED ARE NEW U.N.O.
3) PROTECT AND SAFEGUARD FROM DAMAGE ALL (E) FINISHES TO REMAIN.
4) FOR TYP. STUD WALL FRAMING & CONNECTIONS TO STRUCTURE, SEE SHEET A501.
5) PROVIDE SEALANT MATERIAL AT ALL PENETRATIONS THROUGH NEW & (E) WALLS AND HARD CEILINGS.
6) PATCH, RESURFACE & PAINT (E) WALLS DAMAGED BY CONSTRUCTION TO MATCH ADJACENT SURFACES.
7) DOORS & DOOR FRAMES:
   REPLACE ALL DOORS AND HARDWARE, U.N.O.
   (E) DOOR FRAMES TO REMAIN, U.N.O.
   REFER TO DOOR SCHEDULE SHEETS A012-A015.
8) WINDOWS:
   REPLACE ALL EXT. WINDOWS AND FRAMES, U.N.O.
   REFER TO WINDOW SCHEDULE SHEET A016.
9) CASEWORK:
   REPLACE (E) COUNTERTOPS WITH NEW PLASTIC LAMINATE COUNTERTOPS U.N.O. SAND, STRIP, PATCH AND PAINT INTERIOR AND EXTERIOR OF ALL (E) CASEWORK TO REMAIN. REPLACE DAMAGED OR MISSING DOORS. SOLVENT CLEAN AND REUSE ALL (E) HARDWARE. PROVIDE NEW HARDWARE TO MATCH (E) WHERE MISSING.
10) LOCATE NEW MARKERBOARDS AND TACKBOARDS AS INDICATED ON THE PLANS AND INTERIOR ELEVATIONS.
11) TOILET ROOMS:
   PROVIDE NEW FIXTURES, FINISHES, PARTITIONS & ACCESSORIES U.N.O., COORDINATE WITH PLUMB. DWGS.
12) PROVIDE FIRE EXTINGUISHERS PER SPECIFICATIONS SECTION 10522

WALL LEGEND

EXISTING WALL TO REMAIN

NEW NON RATED WOOD STUD WALL
EXT.: 2X6 @ 16" O.C. INFILL WALL W/
EXTERIOR: PLASTER TO MATCH EXISTING
INTERIOR: SEE FINISH SCHEDULE
INT.: 2X6 @ 16" O.C. INFILL WALL W/
FINISH PER FINISH SCHEDULE
REFER TO SHEET A501 FOR ADDITIONAL INFORMATION

NEW 1-HR RATED WOOD STUD WALL
REFER TO SHEET A501 FOR ADDITIONAL INFORMATION

NEW CASEWORK
SEE INT. ELEVS. FOR ADDITIONAL INFORMATION

KEY PLAN

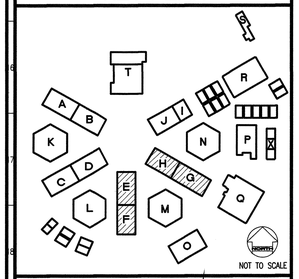

REVISED MAY 12 2004

IDENTIFICATION STAMP
DIV. OF THE STATE ARCHITECT
OFFICE OF REGULATION SERVICES
FILE NO. 19-H51
APPL. NO. 03-106434
AC.___ FLS. NC SS.___
DATE___

Dougherty + Dougherty
Architecture • Planning • Interior Design
3194-D Airport Loop Drive
Costa Mesa, CA 92626
(714) 427-0277

Copyright © 2002 Dougherty + Dougherty

Consultant Seal

Architect Seal

LA MIRADA HIGH SCHOOL
MODERNIZATION
NORWALK - LA MIRADA UNIFIED SCHOOL DISTRICT
13520 ADELFA DRIVE LA MIRADA, CA 90638

CLASSROOM BUILDINGS E-F & G-H FLOOR PLANS

Date:	04-01-04
Job:	20237.50
Scale:	AS NOTED
Drawn:	
Revisions:	

A102

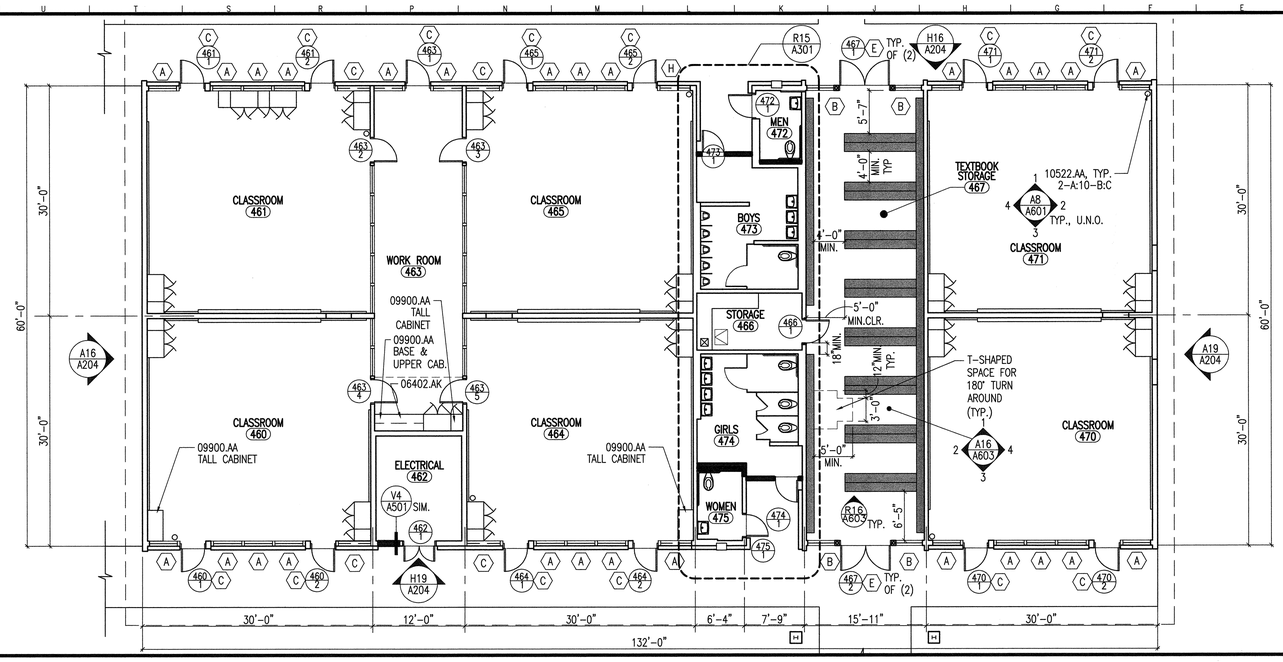

BUILDING J-I FLOOR PLAN

450 BUILDING

A8

1/8"=1'-0"

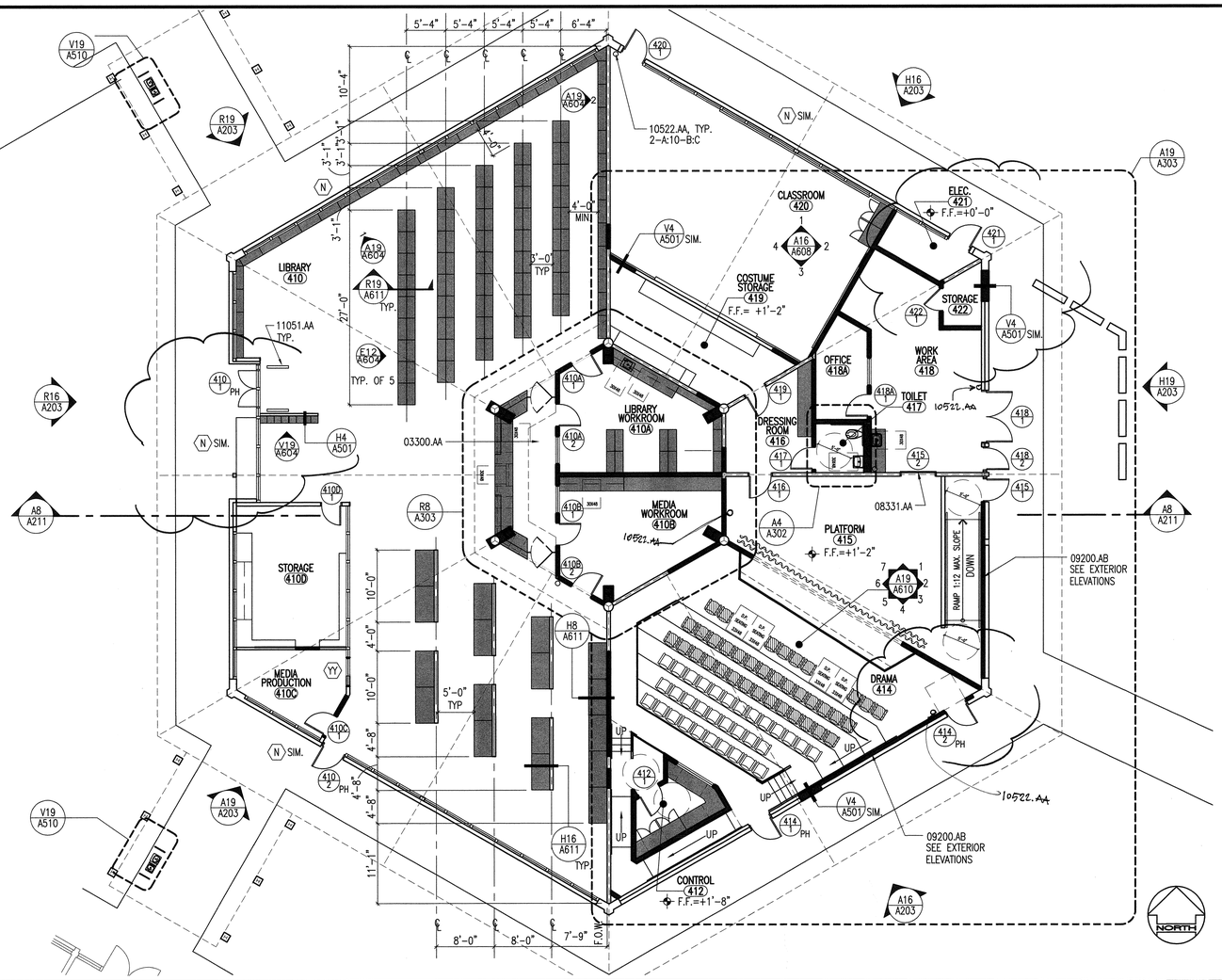

BUILDING N FLOOR PLAN

LIBRARY/DRAMA BUILDING

A19

1/8"=1'-0"

KEYNOTES

KEYNOTES REFERENCE SPECIFICATION SECTIONS BY MEANS OF A FIVE-DIGIT NUMBER IDENTIFYING THE SECTION WHERE A MORE COMPLETE DESCRIPTION OF THE ITEM INDICATED WILL BE FOUND. THE LETTER SUFFIX OF THE KEYNOTE DOES NOT RELATE TO ANY CORRESPONDING REFERENCE LETTER IN THE SPECIFICATION. KEYNOTES DO NOT DESCRIBE CONSTRUCTION MEANS, METHODS, TECHNIQUES, SEQUENCES, OR PROCEDURES. NO TRADE JURISDICTIONAL ALLOCATION OF THIS WORK IS INTENDED BY THE SUBDIVISION OF THESE KEYNOTES. IT SHALL BE THE CONTRACTOR'S SOLE RESPONSIBILITY TO SUBDIVIDE THE WORK IN THE MANNER HE DEEMS NECESSARY.

DIVISION 3 – CONCRETE

03300.AA CONCRETE SLAB – SEE STRUCTURAL

DIVISION 6 – WOOD & PLASTICS

06402.AK PLASTIC LAMINATE COUNTER TOP W/ COVED BACKSPLASH

DIVISION 8 – DOORS & WINDOWS

08331.AA OVERHEAD COILING DOOR

DIVISION 9 – FINISHES

09200.AB EXTERIOR PLASTER
09900.AA PAINT FINISH

DIVISION 10 – SPECIALTIES

10522.AA FIRE EXTINGUISHER

DIVISION 11 – EQUIPMENT

11051.AA BOOK THEFT PROTECTION EQUIPMENT

CONSTRUCTION NOTES

ALL DIMENSIONS TO (E) CONSTRUCTION ARE TO BE FIELD VERIFIED. CONTRACTOR SHALL INFORM ARCHITECT OF ANY SUBSTANTIAL DISCREPANCY BETWEEN FIELD DIMENSIONS AND DRAWINGS.

1) FOR TYP. SYMBOLS & ABBREVIATIONS, SEE SHEET G002
2) ALL ITEMS NOTED ARE NEW U.N.O.
3) PROTECT AND SAFEGUARD FROM DAMAGE ALL (E) FINISHES TO REMAIN.
4) FOR TYP. STUD WALL FRAMING & CONNECTIONS TO STRUCTURE, SEE SHEET A501.
5) PROVIDE SEALANT MATERIAL AT ALL PENETRATIONS THROUGH NEW & (E) WALLS AND HARD CEILINGS.
6) PATCH, RESURFACE & PAINT (E) WALLS DAMAGED BY CONSTRUCTION TO MATCH ADJACENT SURFACES.
7) DOORS & DOOR FRAMES:
   REPLACE ALL DOORS AND HARDWARE, U.N.O.
   (E) DOOR FRAMES TO REMAIN, U.N.O.
   REFER TO DOOR SCHEDULE SHEETS A012–A015.
8) WINDOWS:
   REPLACE ALL EXT. WINDOWS AND FRAMES, U.N.O.
   REFER TO WINDOW SCHEDULE SHEET A016.
9) CASEWORK:
   REPLACE (E) COUNTERTOPS WITH NEW PLASTIC LAMINATE COUNTERTOPS U.N.O. SAND, STRIP, PATCH AND PAINT INTERIOR AND EXTERIOR OF ALL (E) CASEWORK TO REMAIN. REPLACE DAMAGED OR MISSING DOORS. SOLVENT CLEAN AND REUSE ALL (E) HARDWARE. PROVIDE NEW HARDWARE TO MATCH (E) WHERE MISSING.
10) LOCATE NEW MARKERBOARDS AND TACKBOARDS AS INDICATED ON THE PLANS AND INTERIOR ELEVATIONS.
11) TOILET ROOMS:
   PROVIDE NEW FIXTURES, FINISHES, PARTITIONS & ACCESSORIES U.N.O., COORDINATE WITH PLUMB. DWGS.
12) PROVIDE FIRE EXTINGUISHERS PER SPECIFICATIONS SECTION 10522

WALL LEGEND

EXISTING WALL TO REMAIN

NEW NON RATED WOOD STUD WALL
EXT.: 2X6 @ 16" O.C. INFILL WALL W/ EXTERIOR: PLASTER TO MATCH EXISTING
INTERIOR: SEE FINISH SCHEDULE
INT.: 2X6 @ 16" O.C. INFILL WALL W/ FINISH PER FINISH SCHEDULE
REFER TO SHEET A501 FOR ADDITIONAL INFORMATION

NEW 1-HR RATED WOOD STUD WALL
REFER TO SHEET A501 FOR ADDITIONAL INFORMATION

NEW CASEWORK
SEE INT. ELEVS. FOR ADDITIONAL INFORMATION

KEY PLAN

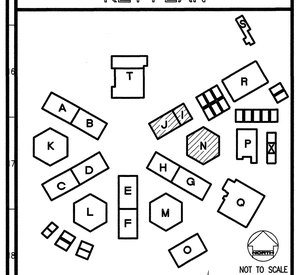

REVISED MAY 1 2 2004

IDENTIFICATION STAMP
DIV. OF THE STATE ARCHITECT
OFFICE OF REGULATION SERVICES
FILE NO. 19-H51
APPL. NO. 03-106434
AC. FLS. SS.
DATE

Dougherty ■ Dougherty
Architecture • Planning • Interior Design
2415 Plaza del Amo, Suite 210
Carson, Calif. 90745
(714) 427-0277

Copyright © 2002 Dougherty + Dougherty

Consultant Seal

Architect Seal

LA MIRADA HIGH SCHOOL
MODERNIZATION
NORWALK - LA MIRADA UNIFIED SCHOOL DISTRICT
13520 ADELFA DRIVE LA MIRADA, CA 90638

CLASSROOM BUILDINGS I-J & N
FLOOR PLANS

Date:	04-01-04
Job:	20237.50
Scale:	AS NOTED
Drawn:	
Revisions:	
1	12-01-03

A103

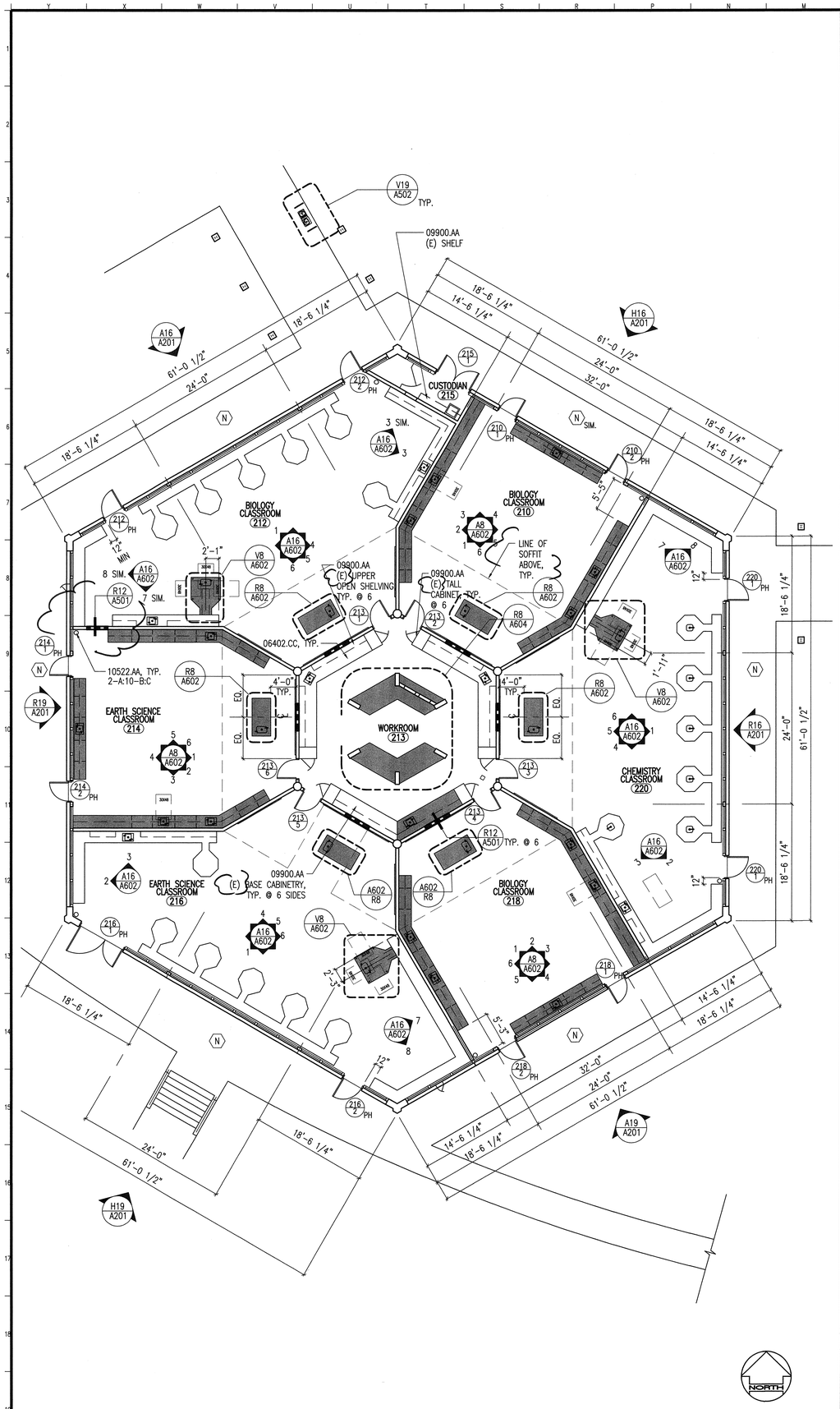

BUILDING L FLOOR PLAN — M19
200 BUILDING — 1/8"=1'-0"

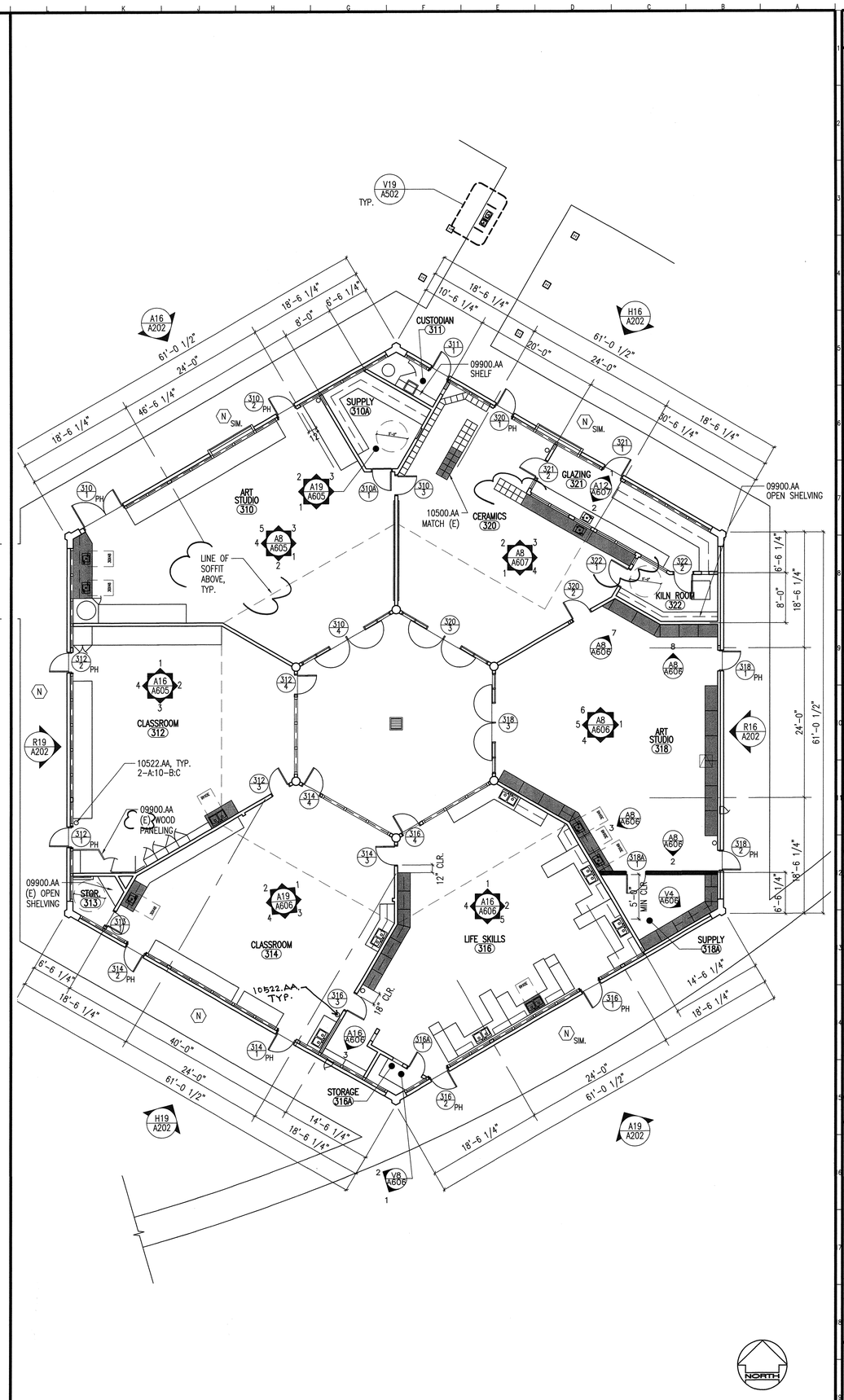

BUILDING M FLOOR PLAN — A19
300 BUILDING — 1/8"=1'-0"

KEYNOTES

KEYNOTES REFERENCE SPECIFICATION SECTIONS BY MEANS OF A FIVE-DIGIT NUMBER IDENTIFYING THE SECTION WHERE A MORE COMPLETE DESCRIPTION OF THE ITEM INDICATED WILL BE FOUND. THE LETTER SUFFIX OF THE KEYNOTE DOES NOT RELATE TO ANY CORRESPONDING REFERENCE LETTER IN THE SPECIFICATION. KEYNOTES DO NOT DESCRIBE CONSTRUCTION MEANS, METHODS, TECHNIQUES, SEQUENCES, OR PROCEDURES. NO TRADE JURISDICTIONAL ALLOCATION OF THIS WORK IS INTENDED BY THE SUBDIVISION OF THESE KEYNOTES. IT SHALL BE THE CONTRACTOR'S SOLE RESPONSIBILITY TO SUBDIVIDE THE WORK IN THE MANNER HE DEEMS NECESSARY.

DIVISION 6 – WOOD & PLASTICS

06402.CC EPOXY RESIN COUNTERTOP (W/ INTEGRAL SINK WHERE OCCURS)

DIVISION 9 – FINISHES

09900.AA PAINT FINISH

DIVISION 10 – SPECIALTIES

10500.AA METAL LOCKER
10522.AA FIRE EXTINGUISHER

CONSTRUCTION NOTES

ALL DIMENSIONS TO (E) CONSTRUCTION ARE TO BE FIELD VERIFIED. CONTRACTOR SHALL INFORM ARCHITECT OF ANY SUBSTANTIAL DISCREPANCY BETWEEN FIELD DIMENSIONS AND DRAWINGS.

1) FOR TYP. SYMBOLS & ABBREVIATIONS, SEE SHEET G002
2) ALL ITEMS NOTED ARE NEW U.N.O.
3) PROTECT AND SAFEGUARD FROM DAMAGE ALL (E) FINISHES TO REMAIN.
4) FOR TYP. STUD WALL FRAMING & CONNECTIONS TO STRUCTURE, SEE SHEET A501.
5) PROVIDE SEALANT MATERIAL AT ALL PENETRATIONS THROUGH NEW & (E) WALLS AND HARD CEILINGS.
6) PATCH, RESURFACE & PAINT (E) WALLS DAMAGED BY CONSTRUCTION TO MATCH ADJACENT SURFACES.
7) DOORS & DOOR FRAMES:
   REPLACE ALL DOORS AND HARDWARE, U.N.O.
   (E) DOOR FRAMES TO REMAIN, U.N.O.
   REFER TO DOOR SCHEDULE SHEETS A012–A015.
8) WINDOWS:
   REPLACE ALL EXT. WINDOWS AND FRAMES, U.N.O.
   REFER TO WINDOW SCHEDULE SHEET A016.
9) CASEWORK:
   REPLACE (E) COUNTERTOPS WITH NEW PLASTIC LAMINATE COUNTERTOPS U.N.O. SAND, STRIP, PATCH AND PAINT INTERIOR AND EXTERIOR OF ALL (E) CASEWORK TO REMAIN. REPLACE DAMAGED OR MISSING DOORS. SOLVENT CLEAN AND REUSE ALL (E) HARDWARE. PROVIDE NEW HARDWARE TO MATCH (E) WHERE MISSING.
10) LOCATE NEW MARKERBOARDS AND TACKBOARDS AS INDICATED ON THE PLANS AND INTERIOR ELEVATIONS.
11) TOILET ROOMS:
   PROVIDE NEW FIXTURES, FINISHES, PARTITIONS & ACCESSORIES U.N.O., COORDINATE WITH PLUMB. DWGS.
12) PROVIDE FIRE EXTINGUISHERS PER SPECIFICATIONS SECTION 10522

WALL LEGEND

- EXISTING WALL TO REMAIN
- NEW NON RATED WOOD STUD WALL
  EXT.: 2X6 @ 16" O.C. INFILL WALL W/
  EXTERIOR: PLASTER TO MATCH EXISTING
  INTERIOR: SEE FINISH SCHEDULE
  INT.: 2X6 @ 16" O.C. INFILL WALL W/
  FINISH PER FINISH SCHEDULE
  REFER TO SHEET A501 FOR ADDITIONAL INFORMATION
- NEW 1-HR RATED WOOD STUD WALL
  REFER TO SHEET A501 FOR ADDITIONAL INFORMATION
- NEW CASEWORK
  SEE INT. ELEVS. FOR ADDITIONAL INFORMATION

KEY PLAN

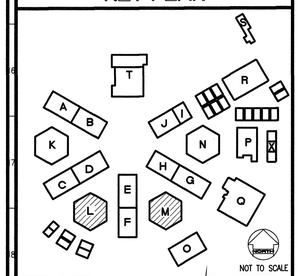

NOT TO SCALE

REVISED MAY 12 2004

IDENTIFICATION STAMP
DIV. OF THE STATE ARCHITECT
OFFICE OF REGULATION SERVICES
FILE NO. 19-H51
APPL. NO. 03-106434
AC. ___ FLS. ___ SS. ___
DATE ___

Dougherty + Dougherty
Architecture • Planning • Interior Design
3536 Concours, Suite 100
Costa Mesa, CA 92626
(714) 427-0277

Copyright © 2002 Dougherty + Dougherty

Consultant Seal

Architect Seal

LA MIRADA HIGH SCHOOL
MODERNIZATION
NORWALK - LA MIRADA UNIFIED SCHOOL DISTRICT
13520 ADELFA DRIVE LA MIRADA, CA 90638

CLASSROOM BUILDINGS L & M
FLOOR PLANS

Date:	04-01-04
Job:	20237.50
Scale:	AS NOTED
Drawn:	
Revisions:	

A104

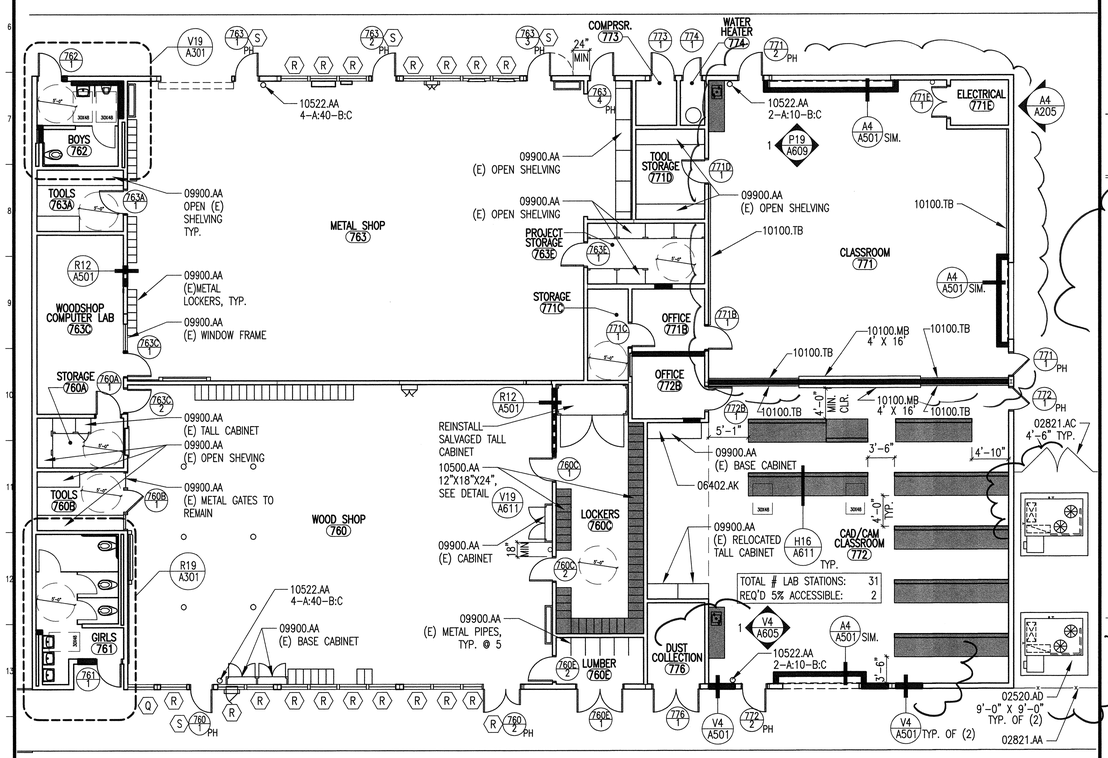

NOTE:
SEE A002 FOR MECHANICAL EQUIPMENT PAD AND ENCLOSER

BUILDING R FLOOR PLAN

SHOP BUILDING — L19 — 1/8"=1'-0"

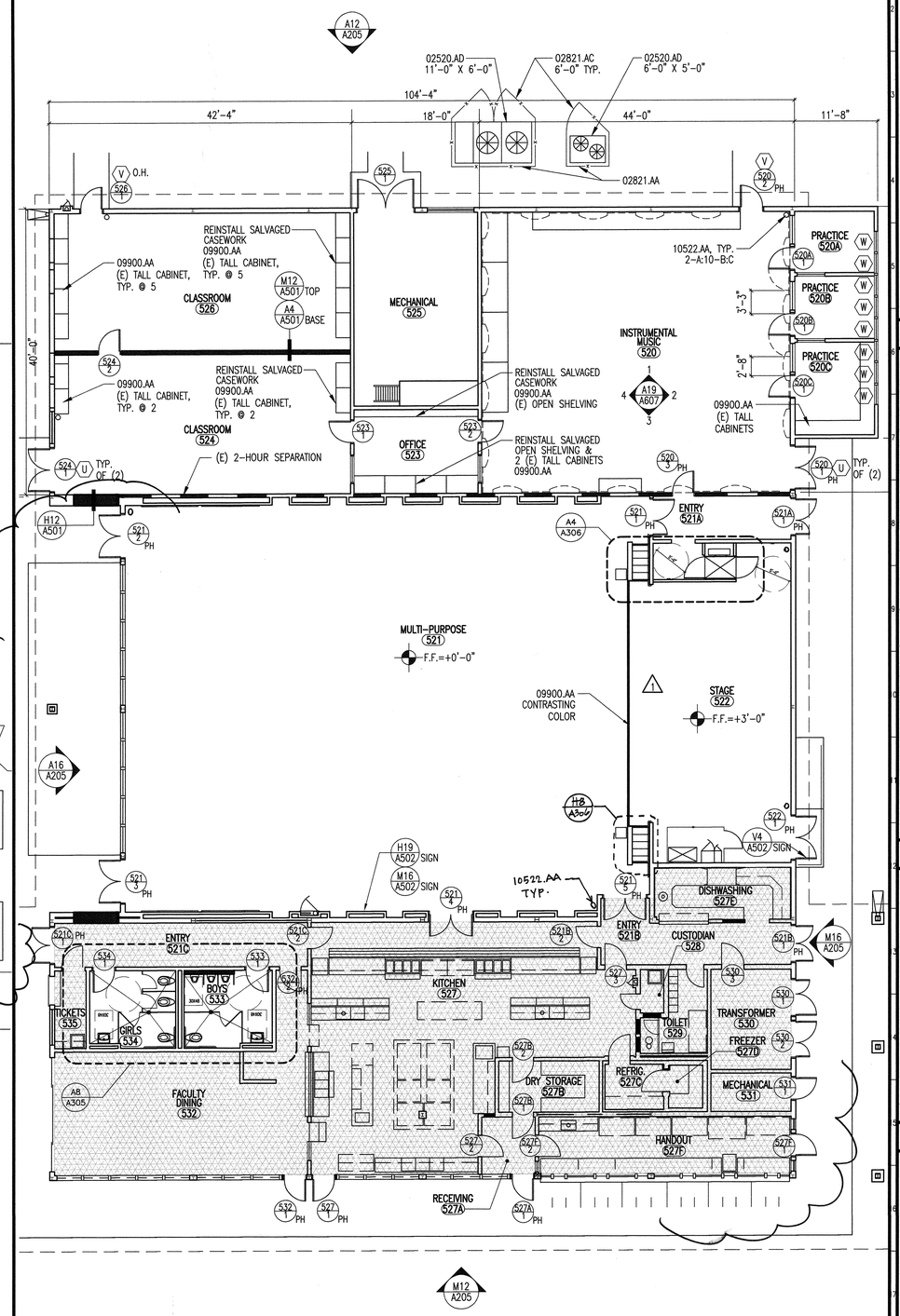

BUILDING T FLOOR PLAN

MULTI-PURPOSE BUILDING — A19 — 1/8"=1'-0"

KEYNOTES

KEYNOTES REFERENCE SPECIFICATION SECTIONS BY MEANS OF A FIVE-DIGIT NUMBER IDENTIFYING THE SECTION WHERE A MORE COMPLETE DESCRIPTION OF THE ITEM INDICATED WILL BE FOUND. THE LETTER SUFFIX OF THE KEYNOTE DOES NOT RELATE TO ANY CORRESPONDING REFERENCE LETTER IN THE SPECIFICATION. KEYNOTES DO NOT DESCRIBE CONSTRUCTION MEANS, METHODS, TECHNIQUES, SEQUENCES, OR PROCEDURES. NO TRADE JURISDICTIONAL ALLOCATION OF THIS WORK IS INTENDED BY THE SUBDIVISION OF THESE KEYNOTES. IT SHALL BE THE CONTRACTOR'S SOLE RESPONSIBILITY TO SUBDIVIDE THE WORK IN THE MANNER HE DEEMS NECESSARY.

DIVISION 2 – SITEWORK

02520.AD CONCRETE PAD – 6" THICK W/#4 BAR @ 12" O.C. EA. WAY
02821.AA 6'–0" HIGH CHAIN–LINK FENCE
02821.AC 6'–0" HIGH CHAIN–LINK GATE – WIDTH NOTED

DIVISION 6 – WOOD & PLASTICS

06402.AK PLASTIC LAMINATE COUNTER TOP W/ COVED BACKSPLASH

DIVISION 9 – FINISHES

09900.AA PAINT FINISH

DIVISION 10 – SPECIALTIES

10100.MB MARKERBOARD
10100.TB TACKBOARD
10500.AA METAL LOCKER
10522.AA FIRE EXTINGUISHER

CONSTRUCTION NOTES

ALL DIMENSIONS TO (E) CONSTRUCTION ARE TO BE FIELD VERIFIED. CONTRACTOR SHALL INFORM ARCHITECT OF ANY SUBSTANTIAL DISCREPANCY BETWEEN FIELD DIMENSIONS AND DRAWINGS.

1) FOR TYP. SYMBOLS & ABBREVIATIONS, SEE SHEET G002
2) ALL ITEMS NOTED ARE NEW U.N.O.
3) PROTECT AND SAFEGUARD FROM DAMAGE ALL (E) FINISHES TO REMAIN.
4) FOR TYP. STUD WALL FRAMING & CONNECTIONS TO STRUCTURE, SEE SHEET A501.
5) PROVIDE SEALANT MATERIAL AT ALL PENETRATIONS THROUGH NEW & (E) WALLS AND HARD CEILINGS.
6) PATCH, RESURFACE & PAINT (E) WALLS DAMAGED BY CONSTRUCTION TO MATCH ADJACENT SURFACES.
7) DOORS & DOOR FRAMES:
   REPLACE ALL DOORS AND HARDWARE, U.N.O.
   (E) DOOR FRAMES TO REMAIN, U.N.O.
   REFER TO DOOR SCHEDULE SHEETS A012–A015.
8) WINDOWS:
   REPLACE ALL EXT. WINDOWS AND FRAMES, U.N.O.
   REFER TO WINDOW SCHEDULE SHEET A016.
9) CASEWORK:
   REPLACE (E) COUNTERTOPS WITH NEW PLASTIC LAMINATE COUNTERTOPS U.N.O. SAND, STRIP, PATCH AND PAINT INTERIOR AND EXTERIOR OF ALL (E) CASEWORK TO REMAIN. REPLACE DAMAGED OR MISSING DOORS. SOLVENT CLEAN AND REUSE ALL (E) HARDWARE. PROVIDE NEW HARDWARE TO MATCH (E) WHERE MISSING.
10) LOCATE NEW MARKERBOARDS AND TACKBOARDS AS INDICATED ON THE PLANS AND INTERIOR ELEVATIONS.
11) TOILET ROOMS:
   PROVIDE NEW FIXTURES, FINISHES, PARTITIONS & ACCESSORIES U.N.O., COORDINATE WITH PLUMB. DWGS.
12) PROVIDE FIRE EXTINGUISHERS PER SPECIFICATIONS SECTION 10522

WALL LEGEND

- EXISTING WALL TO REMAIN
- NEW NON RATED WOOD STUD WALL
  EXT.: 2X6 @ 16" O.C. INFILL WALL W/ EXTERIOR: PLASTER TO MATCH EXISTING INTERIOR: SEE FINISH SCHEDULE
  INT.: 2X6 @ 16" O.C. INFILL WALL W/ FINISH PER FINISH SCHEDULE
  REFER TO SHEET A501 FOR ADDITIONAL INFORMATION
- NEW 1–HR RATED WOOD STUD WALL
  REFER TO SHEET A501 FOR ADDITIONAL INFORMATION
- NEW CASEWORK
  SEE INT. ELEVS. FOR ADDITIONAL INFORMATION
- N.I.C.

KEY PLAN

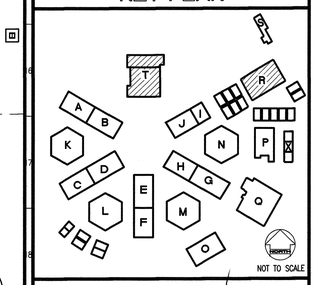

REVISED MAY 1 2 2004

IDENTIFICATION STAMP
DIV. OF THE STATE ARCHITECT
OFFICE OF REGULATION SERVICES
FILE NO. 19–H51
APPL. NO. 03–106434
AC. FLS. SS.
DATE

Dougherty + Dougherty
Architecture • Planning • Interior Design
1500 Quail Street, Suite 200
Costa Mesa, California 92626
(714) 427–0277

Copyright © 2002 Dougherty + Dougherty

Consultant Seal

Architect Seal

LA MIRADA HIGH SCHOOL MODERNIZATION
NORWALK - LA MIRADA UNIFIED SCHOOL DISTRICT
13520 ADELFA DRIVE LA MIRADA, CA 90638

BUILDINGS R & T FLOOR PLANS

Date:	04–01–04
Job:	20237.50
Scale:	AS NOTED
Drawn:	
Revisions:	
1	12–01–03

A105

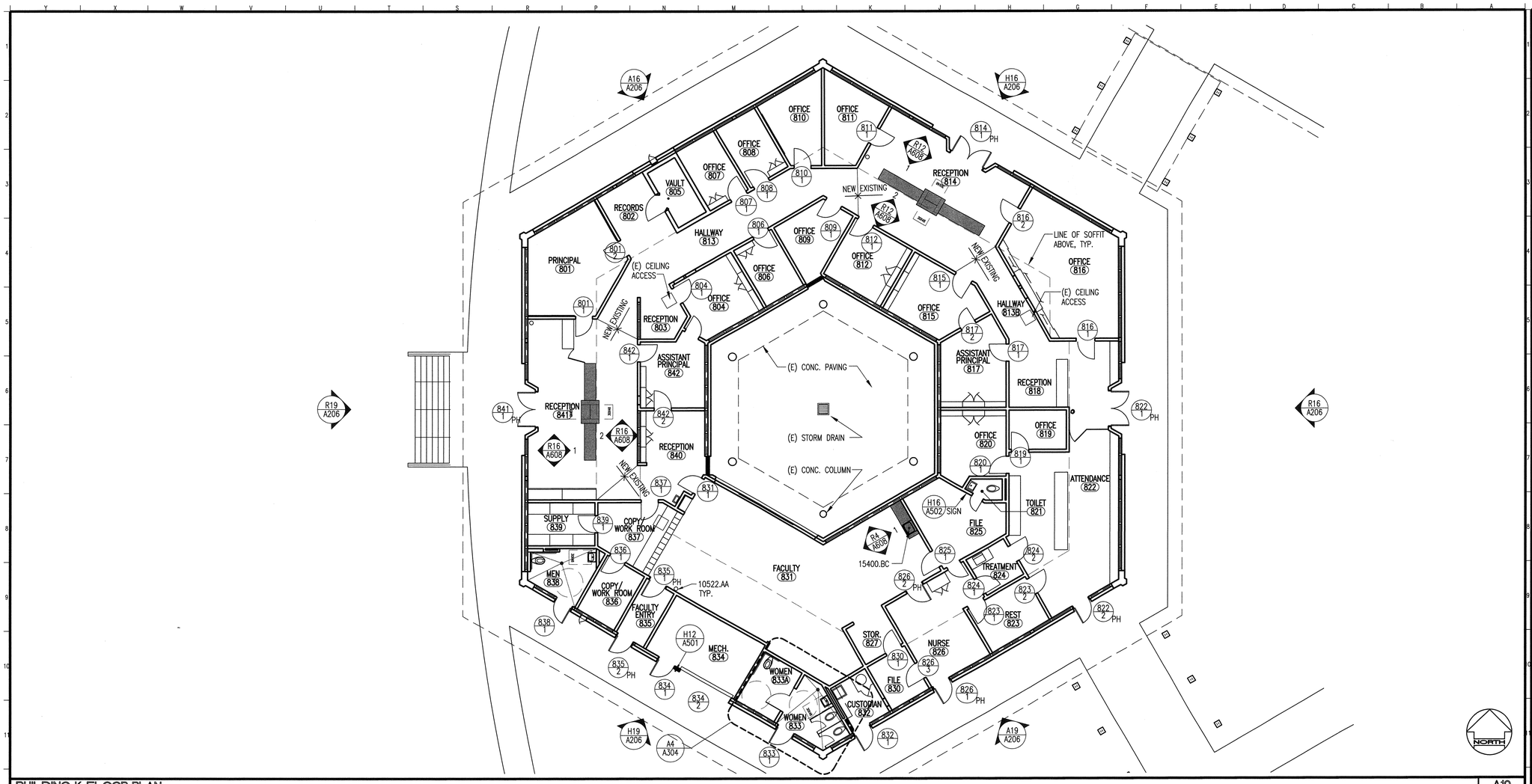

BUILDING K FLOOR PLAN

ADMINISTRATION BUILDING

A19 1/8"=1'-0"

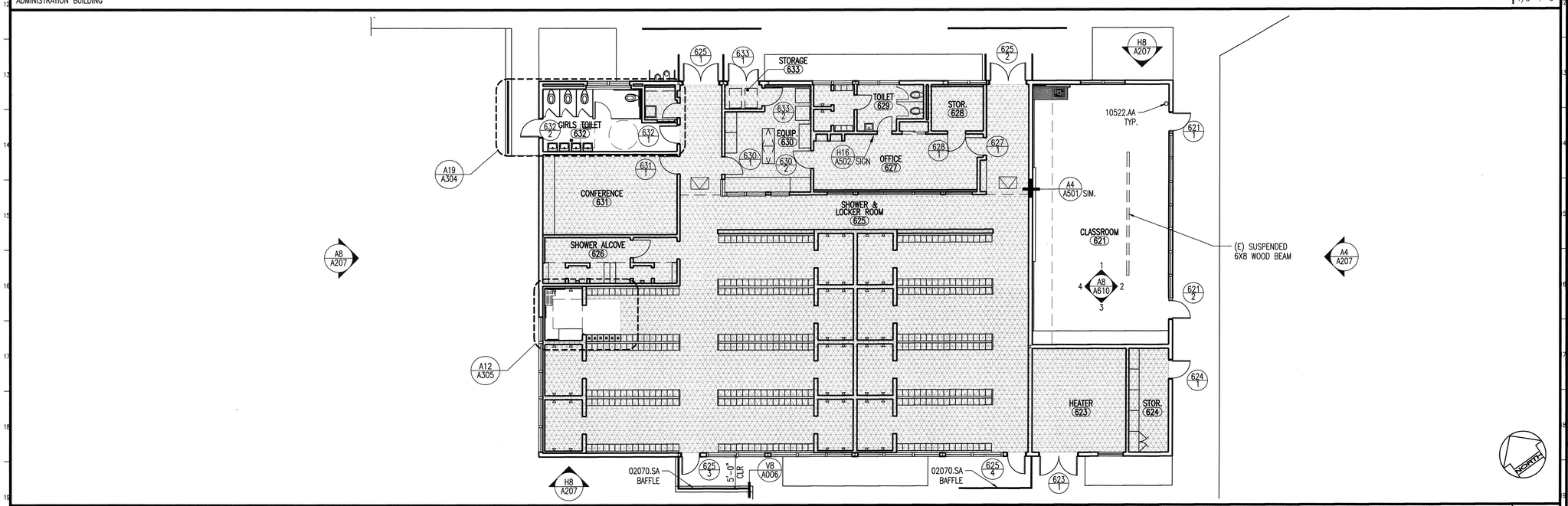

BUILDING O FLOOR PLAN

GIRLS LOCKER BUILDING

A19 1/8"=1'-0"

KEYNOTES

KEYNOTES REFERENCE SPECIFICATION SECTIONS BY MEANS OF A FIVE-DIGIT NUMBER IDENTIFYING THE SECTION WHERE A MORE COMPLETE DESCRIPTION OF THE ITEM INDICATED WILL BE FOUND. THE LETTER SUFFIX OF THE KEYNOTE DOES NOT RELATE TO ANY CORRESPONDING REFERENCE LETTER IN THE SPECIFICATION. KEYNOTES DO NOT DESCRIBE CONSTRUCTION MEANS, METHODS, TECHNIQUES, SEQUENCES, OR PROCEDURES. NO TRADE JURISDICTIONAL ALLOCATION OF THIS WORK IS INTENDED BY THE SUBDIVISION OF THESE KEYNOTES. IT SHALL BE THE CONTRACTOR'S SOLE RESPONSIBILITY TO SUBDIVIDE THE WORK IN THE MANNER HE DEEMS NECESSARY.

DIVISION 2 – SITEWORK

02070.SA SALVAGE ITEM – REUSE IN NEW WORK

DIVISION 15 – MECHANICAL

15400.BC SINK – SEE PLUMBING

CONSTRUCTION NOTES

ALL DIMENSIONS TO (E) CONSTRUCTION ARE TO BE FIELD VERIFIED. CONTRACTOR SHALL INFORM ARCHITECT OF ANY SUBSTANTIAL DISCREPANCY BETWEEN FIELD DIMENSIONS AND DRAWINGS.

1) FOR TYP. SYMBOLS & ABBREVIATIONS, SEE SHEET G002
2) (E) ITEMS TO REMAIN, U.N.O.
3) PROTECT AND SAFEGUARD FROM DAMAGE ALL (E) FINISHES TO REMAIN.
4) FOR TYP. STUD WALL FRAMING & CONNECTIONS TO STRUCTURE, SEE SHEET A501.
5) PROVIDE SEALANT MATERIAL AT ALL PENETRATIONS THROUGH NEW & (E) WALLS AND HARD CEILINGS.
6) PATCH, RESURFACE & PAINT (E) WALLS DAMAGED BY CONSTRUCTION TO MATCH ADJACENT SURFACES.
7) DOORS & DOOR FRAMES:
   (E) DOOR FRAMES TO REMAIN, U.N.O.
   REFER TO DOOR SCHEDULE FOR DOORS AND DOOR HARDWARE TO BE REPLACED.
8) WINDOWS:
   (E) WINDOWS AND FRAMES TO REMAIN, U.N.O.
9) CASEWORK:
   (E) CASEWORK TO REMAIN, U.N.O.
10) TOILET ROOMS:
   PROVIDE NEW FIXTURES, FINISHES, PARTITIONS & ACCESSORIES U.N.O., COORDINATE WITH PLUMB. DWGS.
11) PROVIDE FIRE EXTINGUISHERS PER SPECIFICATIONS SECTION 10522

WALL LEGEND

- EXISTING WALL TO REMAIN
- NEW NON RATED WOOD STUD WALL
  EXT.: 2X6 @ 16" O.C. INFILL WALL W/
  EXTERIOR: PLASTER TO MATCH EXIST.
  INTERIOR: SEE FINISH SCHEDULE
  INT.: 2X6 @ 16" O.C. INFILL WALL
  FINISH PER FINISH SCHEDULE
  REFER TO SHEET A501 FOR ADDITIONAL INFORMATION
- NEW 1-HR RATED WOOD STUD WALL
  REFER TO SHEET A501 FOR ADDITIONAL INFORMATION
- NEW CASEWORK
  SEE INT. ELEVS. FOR ADDITIONAL INFORMATION
- N.I.C.

KEY PLAN

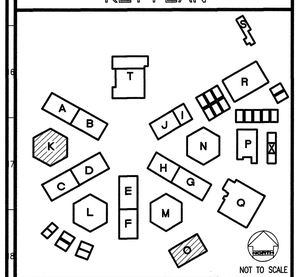

REVISED MAY 1 2 2004

IDENTIFICATION STAMP
DIV. OF THE STATE ARCHITECT
OFFICE OF REGULATION SERVICES
FILE NO. 19-H51
APPL. NO. 03-106434
AC VI FLS NLT SS
DATE

Dougherty + Dougherty
Architecture • Planning • Interior Design
3194-D Airport Loop Drive
Costa Mesa, CA 92626
(714) 427-0277

Copyright © 2002 Dougherty + Dougherty

Consultant Seal

Architect Seal

LA MIRADA HIGH SCHOOL MODERNIZATION
NORWALK - LA MIRADA UNIFIED SCHOOL DISTRICT
13520 ADELFA DRIVE LA MIRADA, CA 90638

BUILDINGS K & O FLOOR PLANS

Date:	04-01-04
Job:	20237.50
Scale:	AS NOTED
Drawn:	
Revisions:	
1	12-01-03

A106

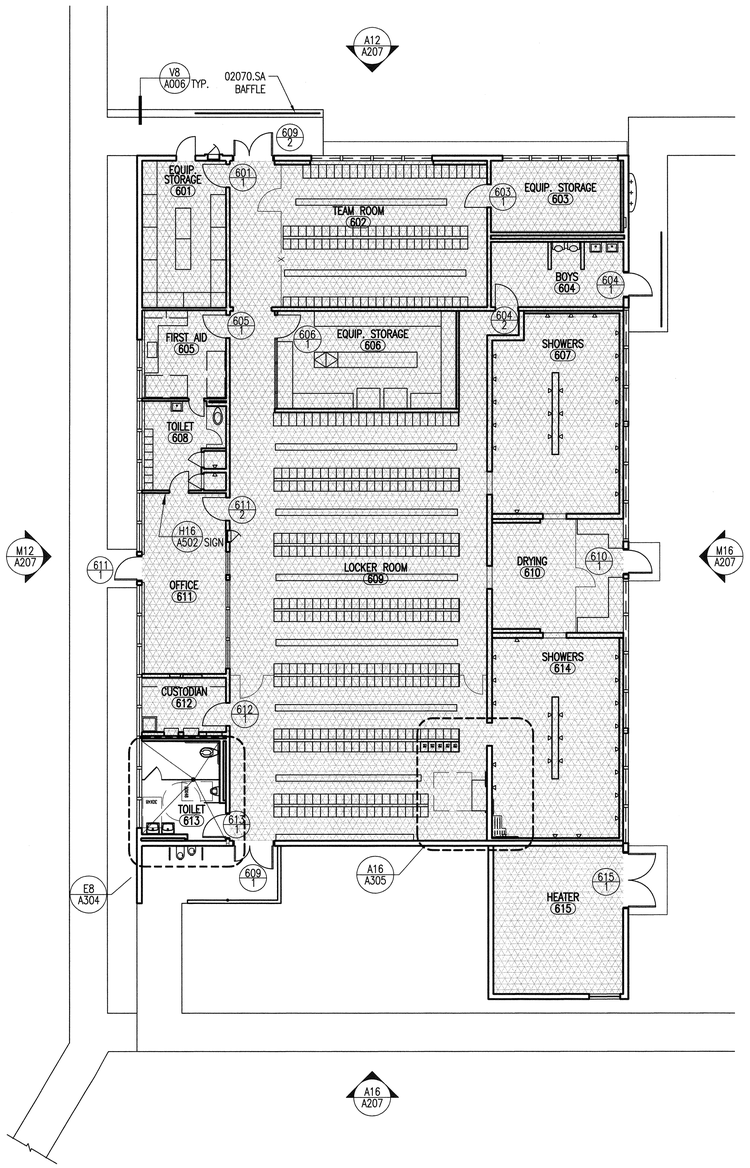

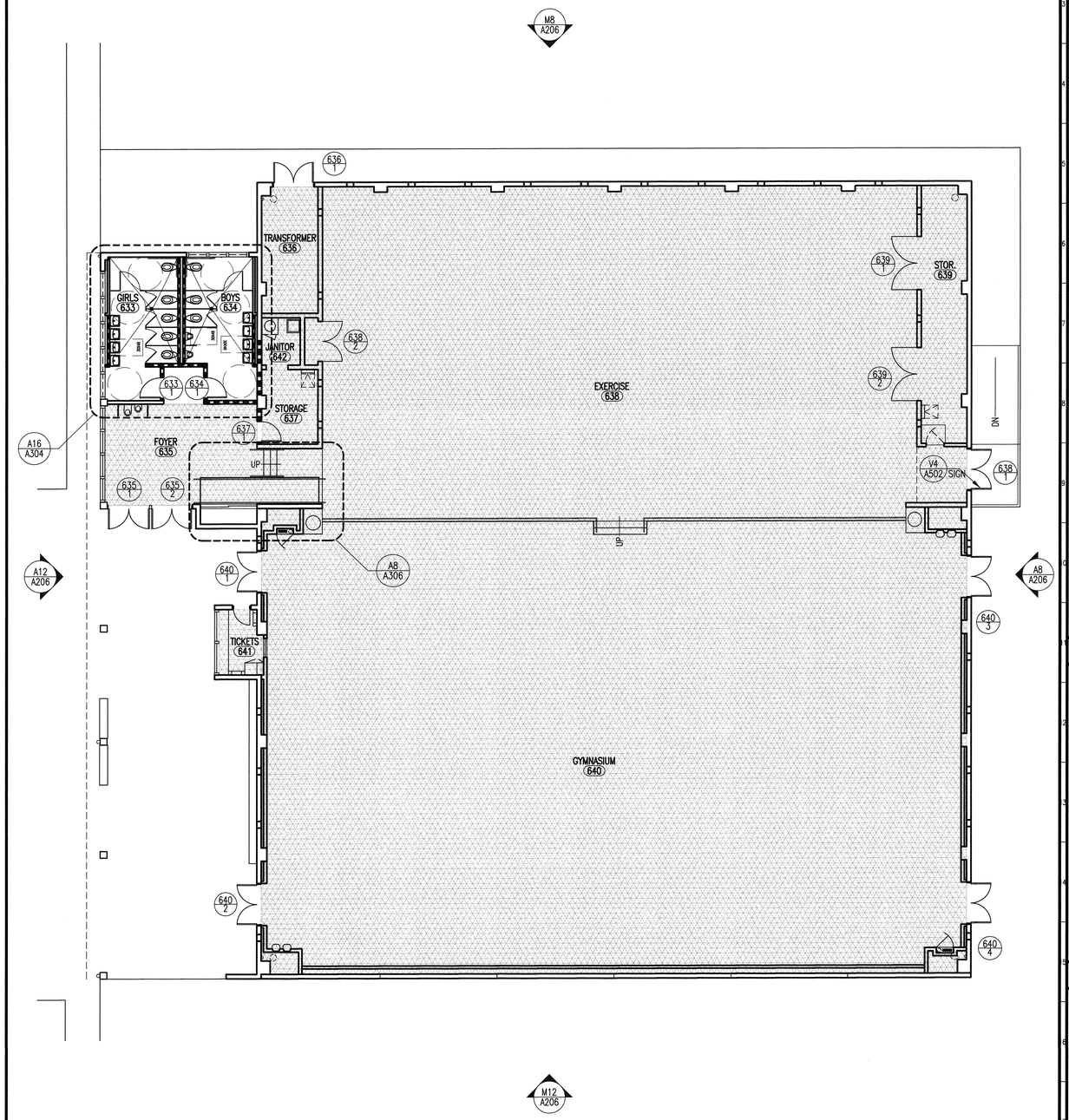

KEYNOTES

KEYNOTES REFERENCE SPECIFICATION SECTIONS BY MEANS OF A FIVE-DIGIT NUMBER IDENTIFYING THE SECTION WHERE A MORE COMPLETE DESCRIPTION OF THE ITEM INDICATED WILL BE FOUND. THE LETTER SUFFIX OF THE KEYNOTE DOES NOT RELATE TO ANY CORRESPONDING REFERENCE LETTER IN THE SPECIFICATION. KEYNOTES DO NOT DESCRIBE CONSTRUCTION MEANS, METHODS, TECHNIQUES, SEQUENCES, OR PROCEDURES. NO TRADE JURISDICTIONAL ALLOCATION OF THIS WORK IS INTENDED BY THE SUBDIVISION OF THESE KEYNOTES. IT SHALL BE THE CONTRACTOR'S SOLE RESPONSIBILITY TO SUBDIVIDE THE WORK IN THE MANNER HE DEEMS NECESSARY.

DIVISION 2 - SITEWORK

02070.SA SALVAGE ITEM - REUSE IN NEW WORK

CONSTRUCTION NOTES

ALL DIMENSIONS TO (E) CONSTRUCTION ARE TO BE FIELD VERIFIED. CONTRACTOR SHALL INFORM ARCHITECT OF ANY SUBSTANTIAL DISCREPANCY BETWEEN FIELD DIMENSIONS AND DRAWINGS.

1) FOR TYP. SYMBOLS & ABBREVIATIONS, SEE SHEET G002
2) (E) ITEMS TO REMAIN, U.N.O.
3) PROTECT AND SAFEGUARD FROM DAMAGE ALL (E) FINISHES TO REMAIN.
4) FOR TYP. STUD WALL FRAMING & CONNECTIONS TO STRUCTURE, SEE SHEET A501.
5) PROVIDE SEALANT MATERIAL AT ALL PENETRATIONS THROUGH NEW & (E) WALLS AND HARD CEILINGS.
6) PATCH, RESURFACE & PAINT (E) WALLS DAMAGED BY CONSTRUCTION TO MATCH ADJACENT SURFACES.
7) DOORS & DOOR FRAMES:
   (E) DOOR FRAMES TO REMAIN, U.N.O.
   REFER TO DOOR SCHEDULE FOR DOORS AND DOOR HARDWARE TO BE REPLACED.
8) WINDOWS:
   (E) WINDOWS AND FRAMES TO REMAIN, U.N.O.
9) CASEWORK:
   (E) CASEWORK TO REMAIN, U.N.O.
10) TOILET ROOMS:
   PROVIDE NEW FIXTURES, FINISHES, PARTITIONS & ACCESSORIES U.N.O., COORDINATE WITH PLUMB. DWGS.
11) PROVIDE FIRE EXTINGUISHERS PER SPECIFICATIONS SECTION 10522

WALL LEGEND

- EXISTING WALL TO REMAIN
- NEW NON RATED WOOD STUD WALL
  EXT.: 2X6 @ 16" O.C. INFILL WALL W/ EXTERIOR: PLASTER TO MATCH EXIST. INTERIOR: SEE FINISH SCHEDULE
  INT.: 2X6 @ 16" O.C. INFILL WALL FINISH PER FINISH SCHEDULE
  REFER TO SHEET A501 FOR ADDITIONAL INFORMATION
- NEW 1-HR RATED WOOD STUD WALL
  REFER TO SHEET A501 FOR ADDITIONAL INFORMATION
- NEW CASEWORK
  SEE INT. ELEVS. FOR ADDITIONAL INFORMATION
- N.I.C.

KEY PLAN

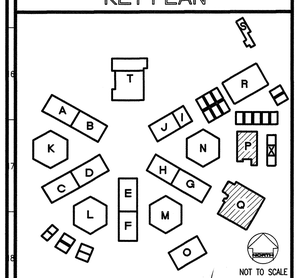

REVISED

IDENTIFICATION STAMP
DIV. OF THE STATE ARCHITECT
OFFICE OF REGULATION SERVICES
FILE NO. 19-H51
APPL. NO. 03-106434
AC. FLS. SS.
DATE

MAY 1 2 2004

Dougherty Dougherty
Architecture · Planning · Interior Design
3194-D Airport Loop Drive
Costa Mesa, CA 92626
(714) 427-0277

Copyright © 2002 Dougherty + Dougherty

Consultant Seal

Architect Seal

LA MIRADA HIGH SCHOOL
MODERNIZATION
NORWALK - LA MIRADA UNIFIED SCHOOL DISTRICT
13520 ADELFA DRIVE LA MIRADA, CA 90638

BUILDINGS
P & Q
FLOOR PLANS

Date:	04-01-04
Job:	20237.50
Scale:	AS NOTED
Drawn:	
Revisions:	
1	12-01-03

A107
1

BUILDING P FLOOR PLAN — P19
BOYS LOCKER ROOM BUILDING — 1/8"=1'-0"

BUILDING Q FLOOR PLAN — A19
GYMNASIUM BUILDING — 1/8"=1'-0"

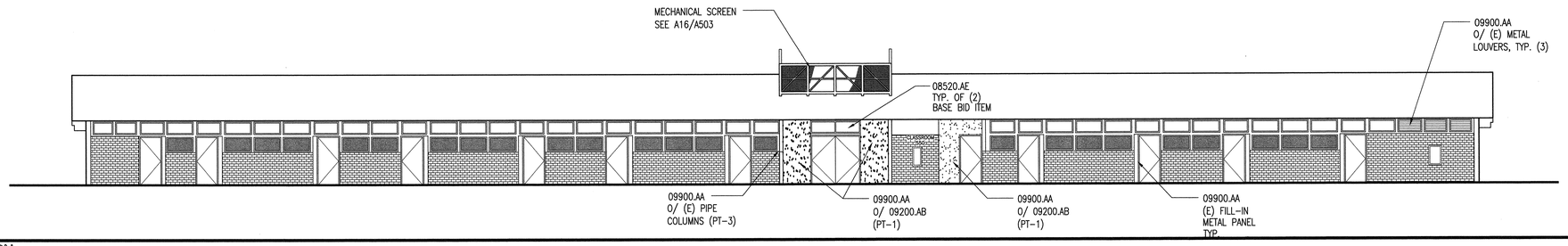

EXTERIOR ELEVATION — **A4**
BUILDING A-B, 550 BUILDING — 1/8"=1'-0"

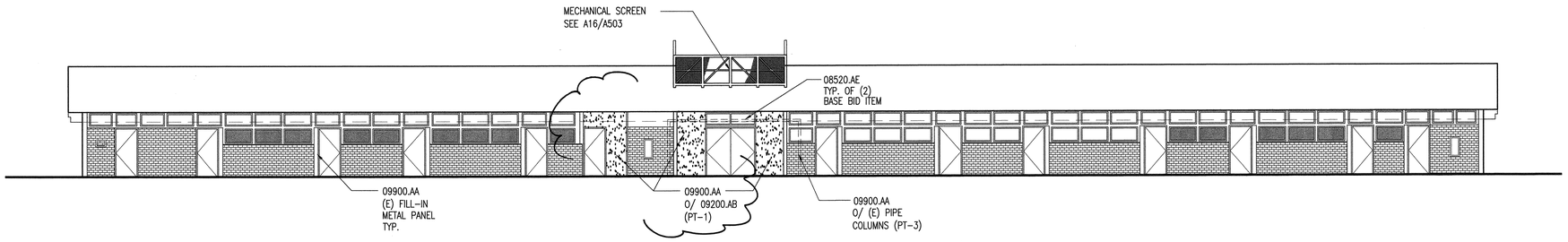

EXTERIOR ELEVATION — **A8**
BUILDING A-B, 550 BUILDING — 1/8"=1'-0"

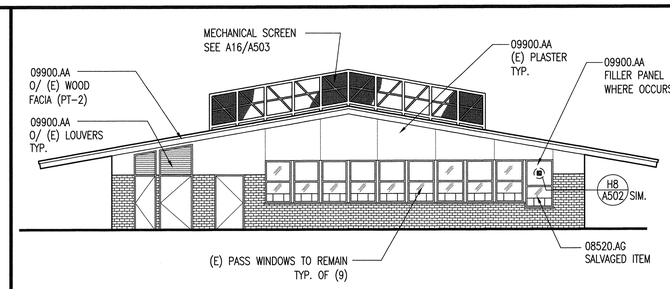

EXTERIOR ELEVATION — **H12**
BUILDING A-B, 550 BUILDING — 1/8"=1'-0"

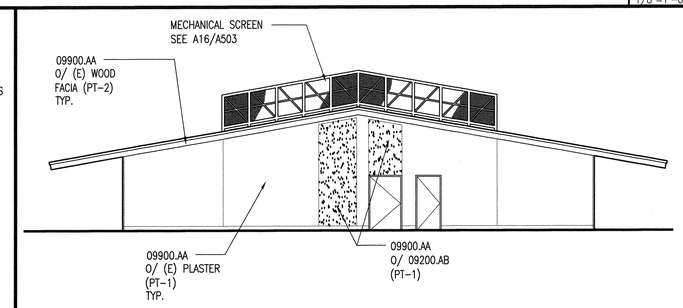

EXTERIOR ELEVATION — **A12**
BUILDING A-B, 550 BUILDING — 1/8"=1'-0"

V12 — **R12**

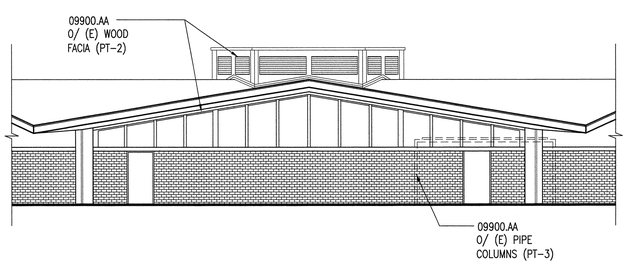

EXTERIOR ELEVATION — **R16**
BUILDING L, 200 BUILDING — 1/8"=1'-0"

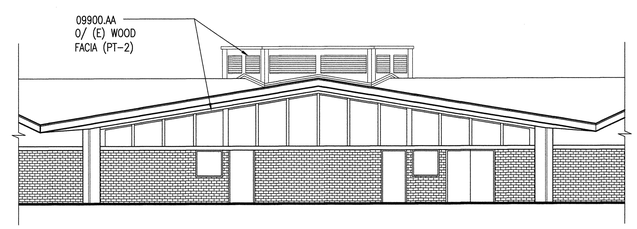

EXTERIOR ELEVATION — **H16**
BUILDING L, 200 BUILDING — 1/8"=1'-0"

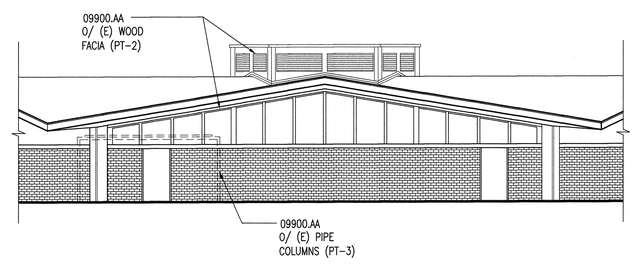

EXTERIOR ELEVATION — **A16**
BUILDING L, 200 BUILDING — 1/8"=1'-0"

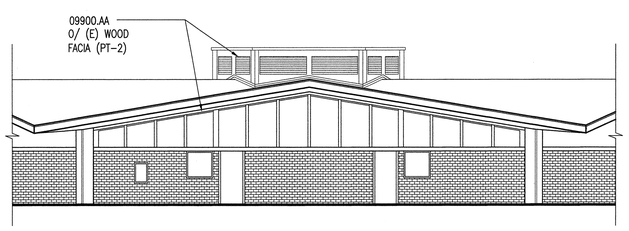

EXTERIOR ELEVATION — **R19**
BUILDING L, 200 BUILDING — 1/8"=1'-0"

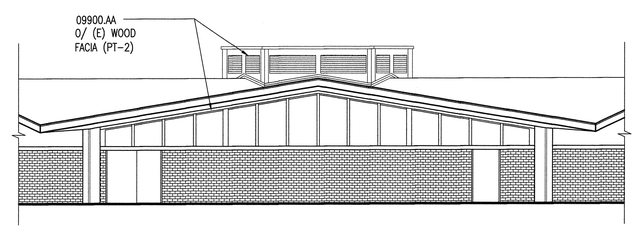

EXTERIOR ELEVATION — **H19**
BUILDING L, 200 BUILDING — 1/8"=1'-0"

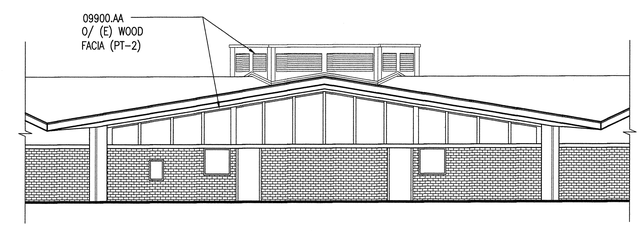

EXTERIOR ELEVATION — **A19**
BUILDING L, 200 BUILDING — 1/8"=1'-0"

KEYNOTES

KEYNOTES REFERENCE SPECIFICATION SECTIONS BY MEANS OF A FIVE-DIGIT NUMBER IDENTIFYING THE SECTION WHERE A MORE COMPLETE DESCRIPTION OF THE ITEM INDICATED WILL BE FOUND. THE LETTER SUFFIX OF THE KEYNOTE DOES NOT RELATE TO ANY CORRESPONDING REFERENCE LETTER IN THE SPECIFICATION. KEYNOTES DO NOT DESCRIBE CONSTRUCTION MEANS, METHODS, TECHNIQUES, SEQUENCES, OR PROCEDURES. NO TRADE JURISDICTIONAL ALLOCATION OF THIS WORK IS INTENDED BY THE SUBDIVISION OF THESE KEYNOTES. IT SHALL BE THE CONTRACTOR'S SOLE RESPONSIBILITY TO SUBDIVIDE THE WORK IN THE MANNER HE DEEMS NECESSARY.

DIVISION 8 - DOORS & WINDOWS

08520.AE NEW ALUMINUM WINDOW
08520.AG ALUMINUM SLIDING SERVICE WINDOW

DIVISION 9 - FINISHES

09200.AB EXTERIOR PLASTER
09900.AA PAINT FINISH

EXTERIOR ELEVATIONS LEGEND

- CLEAR GLAZING REFER TO SECTION 08800
- OBSCURED GLAZING REFER TO SECTION 08800
- (E) EXTERIOR PLASTER PAINT PER SECTION 09900
- (N) EXTERIOR PLASTER REFER TO SECTION 09200 PAINT PER SECTION 09900
- (E) BRICK VENEER WALL TO REMAIN REFER TO SECTION 02070

EXTERIOR ELEVATIONS GENERAL NOTES

1) ALL WINDOWS ARE ALTERNATE BID ITEMS, UNLESS INDICATED ON EXTERIOR ELEVATIONS.
2) PAINT EXTERIOR PLASTER WALLS, ROOF FACIAS, AND METAL LOUVERS. REPAIR AS NECESSARY. REFER TO SPECIFICATION SECTION 09900.

KEY PLAN

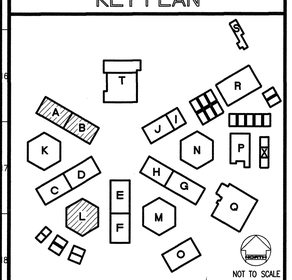

REVISED MAY 12 2004

IDENTIFICATION STAMP
DIV. OF THE STATE ARCHITECT
OFFICE OF REGULATION SERVICES
FILE NO. 19-H51
APPL. NO. 03-106434
AC. FLS. SS.
DATE

Dougherty + Dougherty
Architecture • Planning • Interior Design
3194-D Airport Loop Drive
Costa Mesa, CA 92626
(714) 427-0277

Copyright © 2002 Dougherty + Dougherty

Architect Seal

Consultant Seal

LA MIRADA HIGH SCHOOL
MODERNIZATION
NORWALK - LA MIRADA UNIFIED SCHOOL DISTRICT
13520 ADELFA DRIVE LA MIRADA, CA 90638

EXTERIOR ELEVATIONS
BLDGS. A-B & L

Date:	04-01-04
Job:	20237.50
Scale:	AS NOTED
Drawn:	
Revisions:	

A201

Y:\2002 Projects\20237.5 LAHS\20237SA201.dwg, 05/04/2004 03:39:48 PM

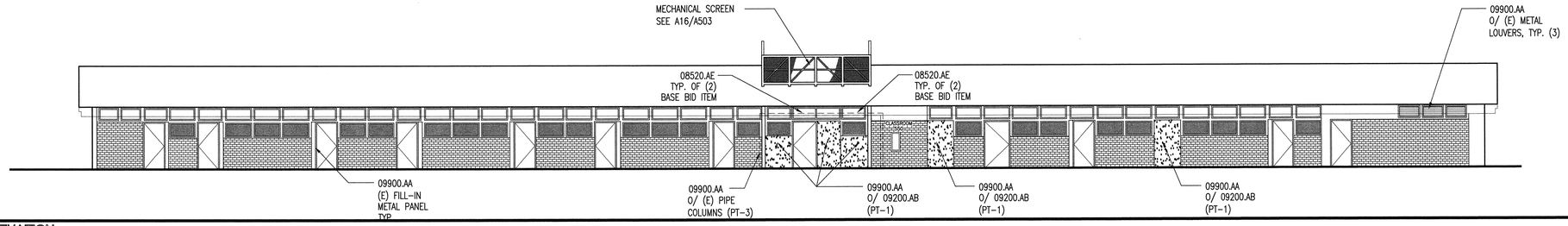

EXTERIOR ELEVATION — A4
BUILDING C-D, 150 BUILDING — 1/8"=1'-0"

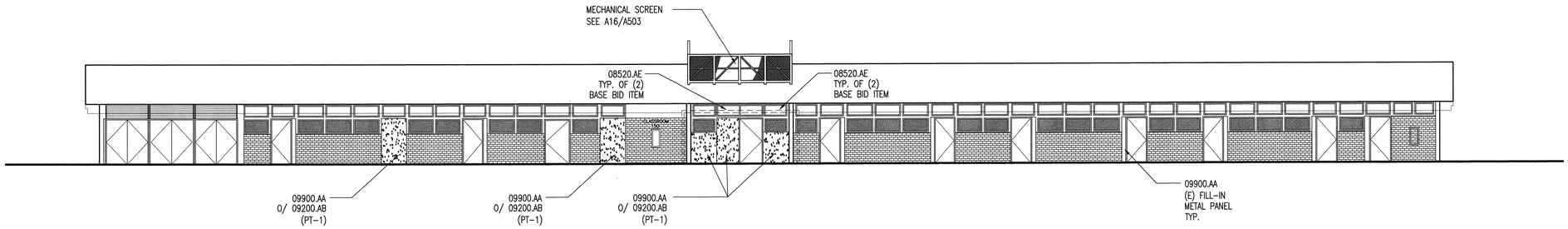

EXTERIOR ELEVATION — A8
BUILDING C-D, 150 BUILDING — 1/8"=1'-0"

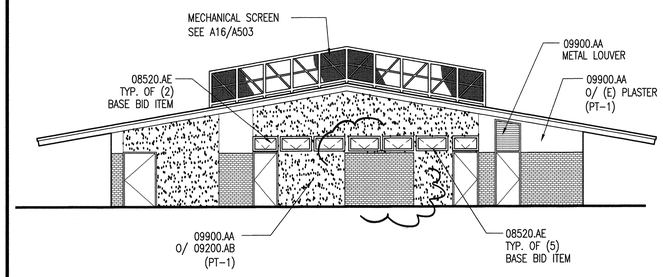

EXTERIOR ELEVATION — H12
BUILDING C-D, 150 BUILDING — 1/8"=1'-0"

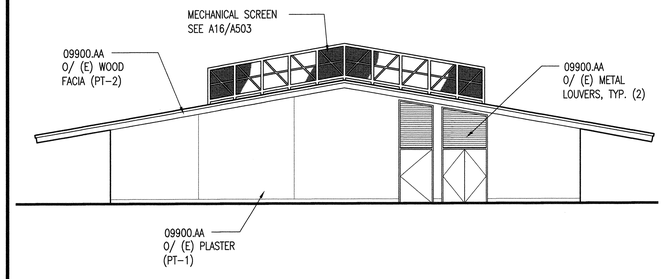

EXTERIOR ELEVATION — A12
BUILDING C-D, 150 BUILDING — 1/8"=1'-0"

V12 — R12

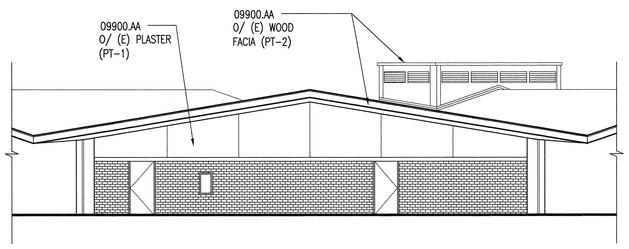

EXTERIOR ELEVATION — R16
BUILDING M, 300 BUILDING — 1/8"=1'-0"

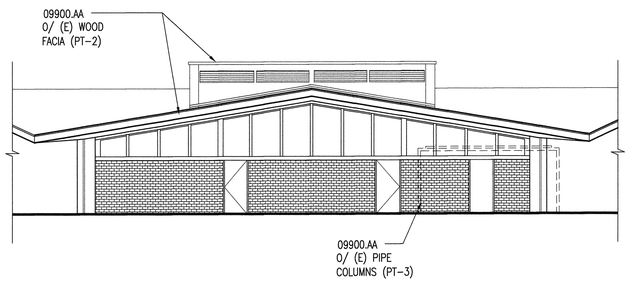

EXTERIOR ELEVATION — H16
BUILDING M, 300 BUILDING — 1/8"=1'-0"

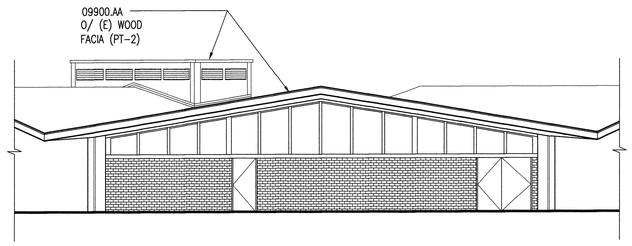

EXTERIOR ELEVATION — A16
BUILDING M, 300 BUILDING — 1/8"=1'-0"

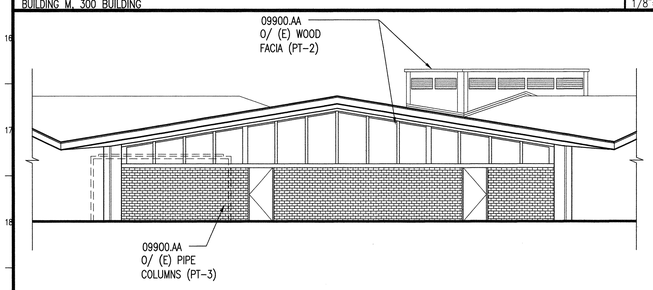

EXTERIOR ELEVATION — R19
BUILDING M, 300 BUILDING — 1/8"=1'-0"

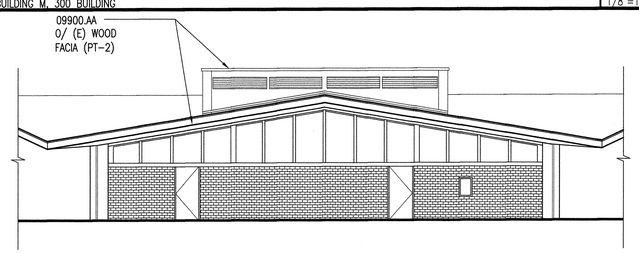

EXTERIOR ELEVATION — H19
BUILDING M, 300 BUILDING — 1/8"=1'-0"

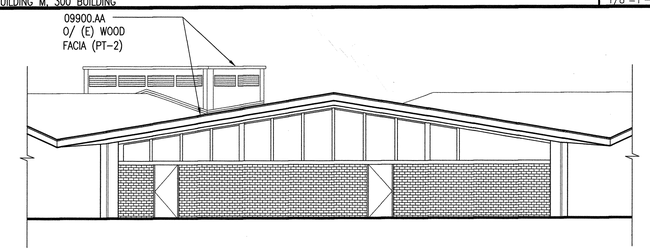

EXTERIOR ELEVATION — A19
BUILDING M, 300 BUILDING — 1/8"=1'-0"

KEYNOTES

KEYNOTES REFERENCE SPECIFICATION SECTIONS BY MEANS OF A FIVE-DIGIT NUMBER IDENTIFYING THE SECTION WHERE A MORE COMPLETE DESCRIPTION OF THE ITEM INDICATED WILL BE FOUND. THE LETTER SUFFIX OF THE KEYNOTE DOES NOT RELATE TO ANY CORRESPONDING REFERENCE LETTER IN THE SPECIFICATION. KEYNOTES DO NOT DESCRIBE CONSTRUCTION MEANS, METHODS, TECHNIQUES, SEQUENCES, OR PROCEDURES. NO TRADE JURISDICTIONAL ALLOCATION OF THIS WORK IS INTENDED BY THE SUBDIVISION OF THESE KEYNOTES. IT SHALL BE THE CONTRACTOR'S SOLE RESPONSIBILITY TO SUBDIVIDE THE WORK IN THE MANNER HE DEEMS NECESSARY.

DIVISION 8 – DOORS & WINDOWS

08520.AE NEW ALUMINUM WINDOW

DIVISION 9 – FINISHES

09200.AB EXTERIOR PLASTER
09900.AA PAINT FINISH

EXTERIOR ELEVATIONS LEGEND

- CLEAR GLAZING REFER TO SECTION 08800
- OBSCURED GLAZING REFER TO SECTION 08800
- (E) EXTERIOR PLASTER PAINT PER SECTION 09900
- (N) EXTERIOR PLASTER REFER TO SECTION 09200 PAINT PER SECTION 09900
- (E) BRICK VENEER WALL TO REMAIN REFER TO SECTION 02070

EXTERIOR ELEVATIONS GENERAL NOTES

1) ALL WINDOWS ARE ALTERNATE BID ITEMS, UNLESS INDICATED ON EXTERIOR ELEVATIONS.
2) PAINT EXTERIOR PLASTER WALLS, ROOF FACIAS, AND METAL LOUVERS. REPAIR AS NECESSARY. REFER TO SPECIFICATION SECTION 09900.

KEY PLAN

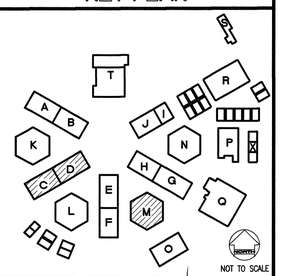

REVISED MAY 12 2004

IDENTIFICATION STAMP
DIV. OF THE STATE ARCHITECT
OFFICE OF REGULATION SERVICES
FILE NO. 19-H51
APPL. NO. 03-106434
AC. FLS. SS.
DATE

Dougherty + Dougherty
Architecture · Planning · Interior Design
31564 D Avenue Lago Drive
Costa Mesa, CA 92626
(714) 427-0277

Copyright © 2002 Dougherty + Dougherty

Architect Seal

Consultant Seal

LA MIRADA HIGH SCHOOL
MODERNIZATION
NORWALK - LA MIRADA UNIFIED SCHOOL DISTRICT
13520 ADELFA DRIVE LA MIRADA, CA 90638

EXTERIOR ELEVATIONS
BLDGS. C-D & M

Date:	04-01-04
Job:	20237.50
Scale:	AS NOTED
Drawn:	
Revisions:	

A202

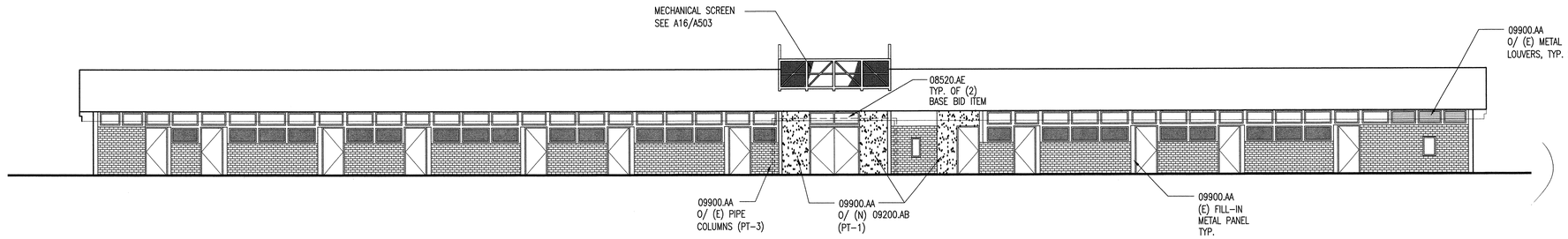

EXTERIOR ELEVATION — A4
BUILDING E-F, 250 BUILDING — 1/8"=1'-0"

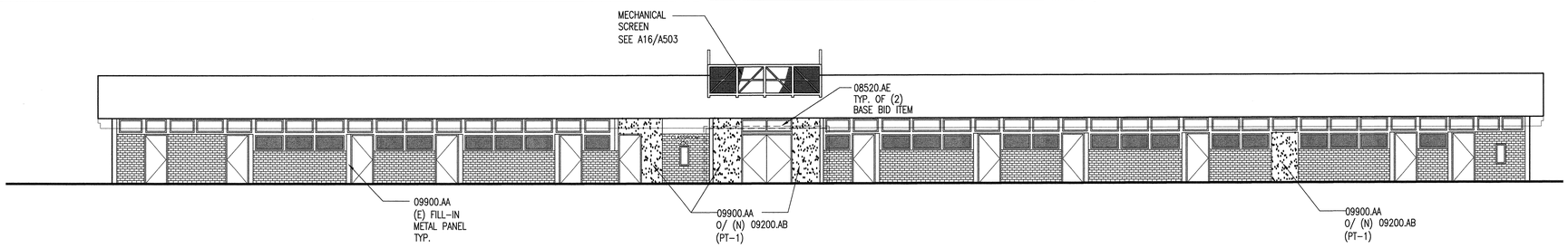

EXTERIOR ELEVATION — A8
BUILDING E-F, 250 BUILDING — 1/8"=1'-0"

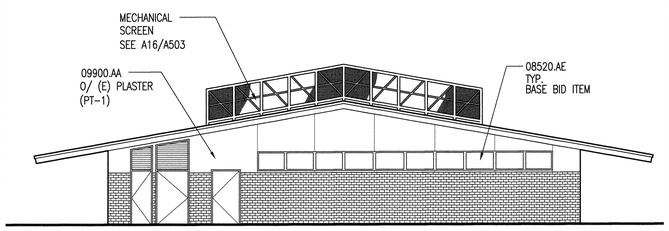

EXTERIOR ELEVATION — H12
BUILDING E-F, 250 BUILDING — 1/8"=1'-0"

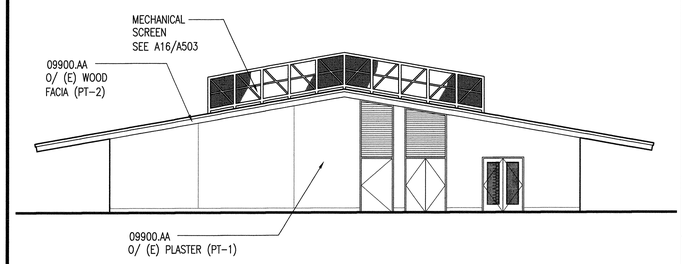

EXTERIOR ELEVATION — A12
BUILDING E-F, 250 BUILDING — 1/8"=1'-0"

V12 — R12

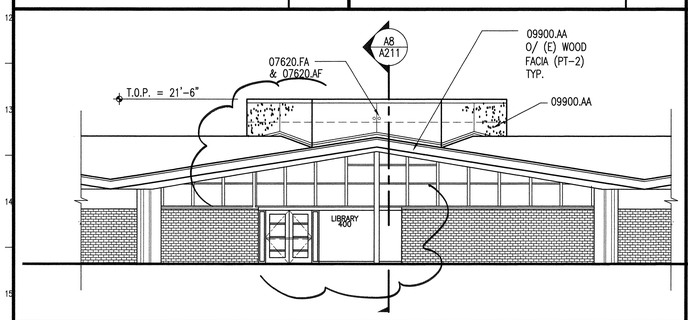

EXTERIOR ELEVATION — R16
BUILDING N, LIBRARY/DRAMA BUILDING — 1/8"=1'-0"

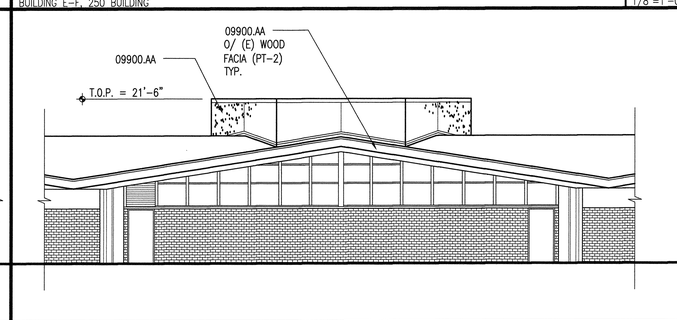

EXTERIOR ELEVATION — H16
BUILDING N, LIBRARY/DRAMA BUILDING — 1/8"=1'-0"

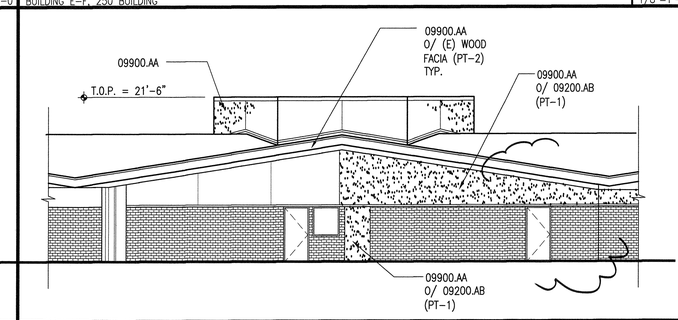

EXTERIOR ELEVATION — A16
BUILDING N, LIBRARY/DRAMA BUILDING — 1/8"=1'-0"

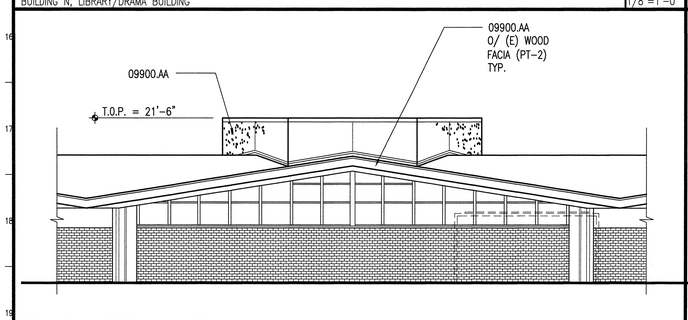

EXTERIOR ELEVATION — R19
BUILDING N, LIBRARY/DRAMA BUILDING — 1/8"=1'-0"

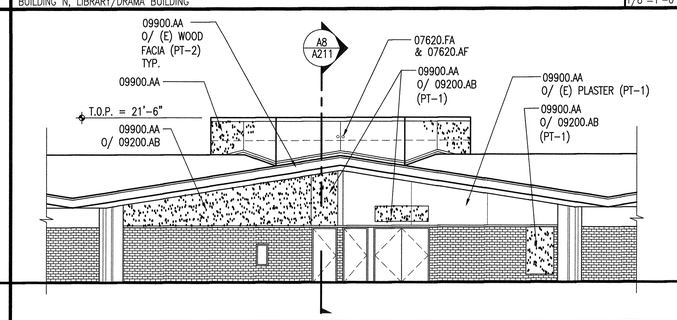

EXTERIOR ELEVATION — H19
BUILDING N, LIBRARY/DRAMA BUILDING — 1/8"=1'-0"

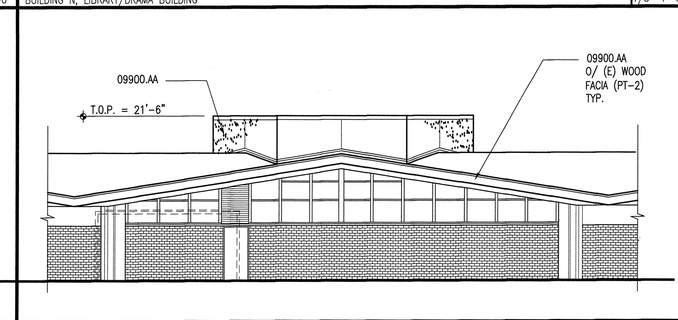

EXTERIOR ELEVATION — A19
BUILDING N, LIBRARY/DRAMA BUILDING — 1/8"=1'-0"

KEYNOTES

KEYNOTES REFERENCE SPECIFICATION SECTIONS BY MEANS OF A FIVE-DIGIT NUMBER IDENTIFYING THE SECTION WHERE A MORE COMPLETE DESCRIPTION OF THE ITEM INDICATED WILL BE FOUND. THE LETTER SUFFIX OF THE KEYNOTE DOES NOT RELATE TO ANY CORRESPONDING REFERENCE LETTER IN THE SPECIFICATION. KEYNOTES DO NOT DESCRIBE CONSTRUCTION MEANS, METHODS, TECHNIQUES, SEQUENCES, OR PROCEDURES. NO TRADE JURISDICTIONAL ALLOCATION OF THIS WORK IS INTENDED BY THE SUBDIVISION OF THESE KEYNOTES. IT SHALL BE THE CONTRACTOR'S SOLE RESPONSIBILITY TO SUBDIVIDE THE WORK IN THE MANNER HE DEEMS NECESSARY.

DIVISION 7 – THERMAL & MOISTURE PROTECTION

07620.AF GALV. METAL DOWNSPOUT
07620.FA SCUPPER

DIVISION 8 – DOORS & WINDOWS

08520.AE NEW ALUMINUM WINDOW

DIVISION 9 – FINISHES

09200.AB EXTERIOR PLASTER
09900.AA PAINT FINISH

EXTERIOR ELEVATIONS LEGEND

- CLEAR GLAZING REFER TO SECTION 08800
- OBSCURED GLAZING REFER TO SECTION 08800
- (E) EXTERIOR PLASTER PAINT PER SECTION 09900
- (N) EXTERIOR PLASTER REFER TO SECTION 09200 PAINT PER SECTION 09900
- (E) BRICK VENEER WALL TO REMAIN REFER TO SECTION 02070

EXTERIOR ELEVATIONS GENERAL NOTES

1) ALL WINDOWS ARE ALTERNATE BID ITEMS, UNLESS INDICATED ON EXTERIOR ELEVATIONS.
2) PAINT EXTERIOR PLASTER WALLS, ROOF FACIAS, AND METAL LOUVERS. REPAIR AS NECESSARY. REFER TO SPECIFICATION SECTION 09900.

KEY PLAN

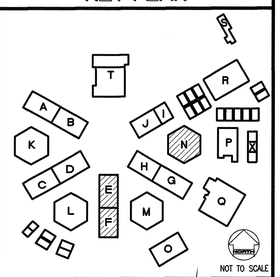

REVISED MAY 1 2 2004

IDENTIFICATION STAMP
DIV. OF THE STATE ARCHITECT
OFFICE OF REGULATION SERVICES
FILE NO. 19-H51
APPL. NO. 03-106434
ACCESS ___ FLS. ___ SS ___
DATE ___

Dougherty + Dougherty
Architecture • Planning • Interior Design
2728 Loker Avenue Drive
Costa Mesa, CA 92626
(714) 427-0277

Copyright © 2002 Dougherty + Dougherty

Architect Seal

Consultant Seal

LA MIRADA HIGH SCHOOL
MODERNIZATION
NORWALK - LA MIRADA UNIFIED SCHOOL DISTRICT
13520 ADELFA DRIVE LA MIRADA, CA 90638

EXTERIOR ELEVATIONS
BLDGS. E-F & N

Date:	04-01-04
Job:	20237.50
Scale:	AS NOTED
Drawn:	
Revisions:	

A203

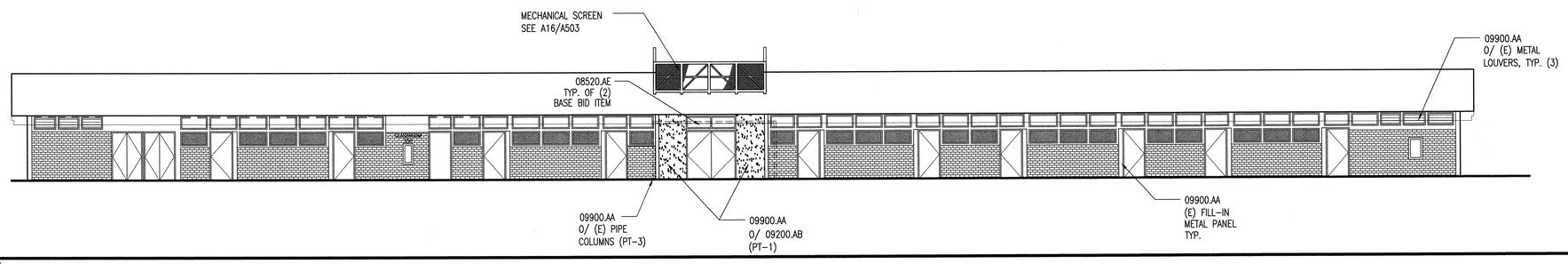

EXTERIOR ELEVATION — A4
BUILDING G-H, 350 BUILDING — 1/8"=1'-0"

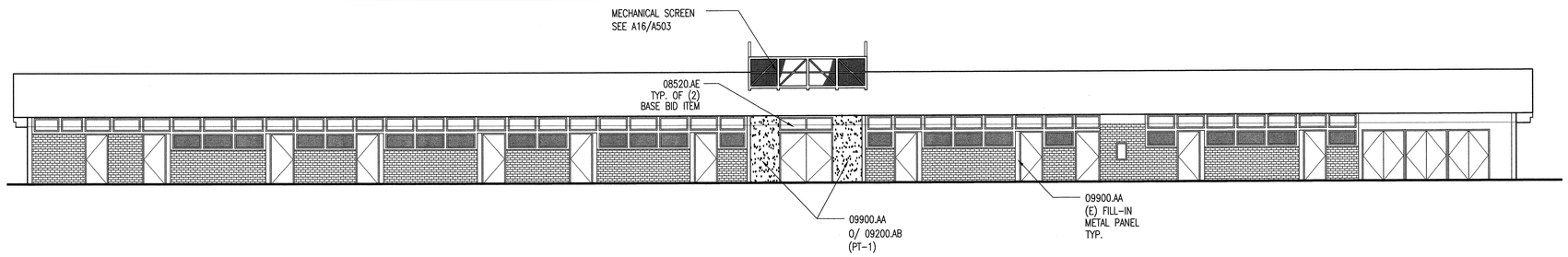

EXTERIOR ELEVATION — A8
BUILDING G-H, 350 BUILDING — 1/8"=1'-0"

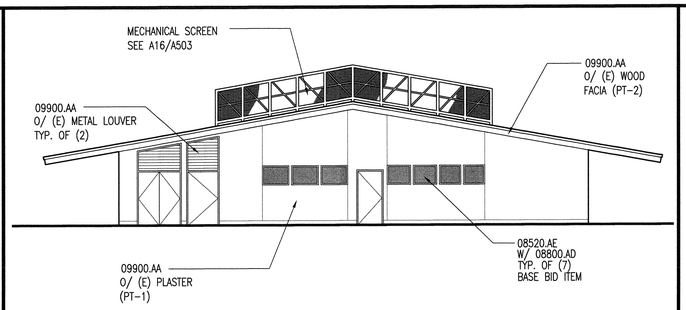

EXTERIOR ELEVATION — H12
BUILDING G-H, 350 BUILDING — 1/8"=1'-0"

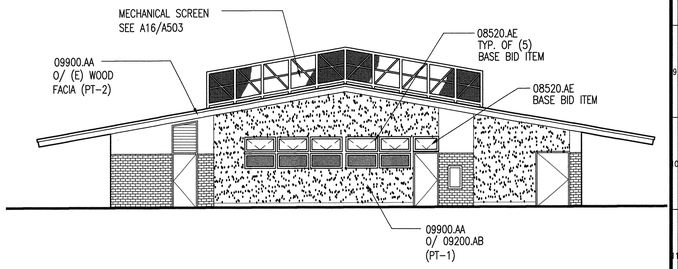

EXTERIOR ELEVATION — A12
BUILDING G-H, 350 BUILDING — 1/8"=1'-0"

V12 | R12

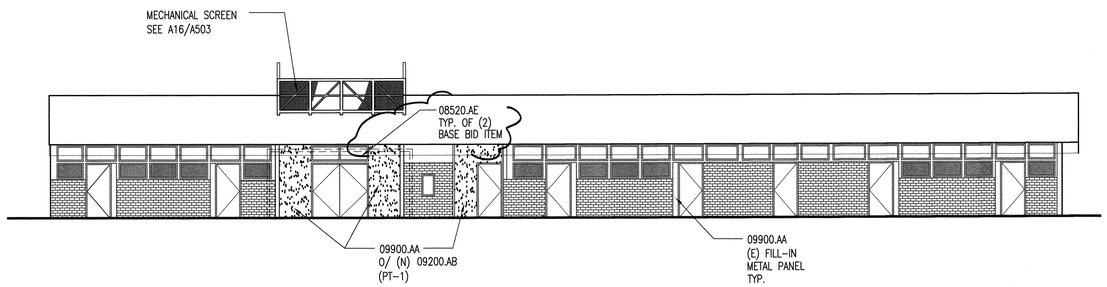

EXTERIOR ELEVATION — H16
BUILDING I-J, 450 BUILDING — 1/8"=1'-0"

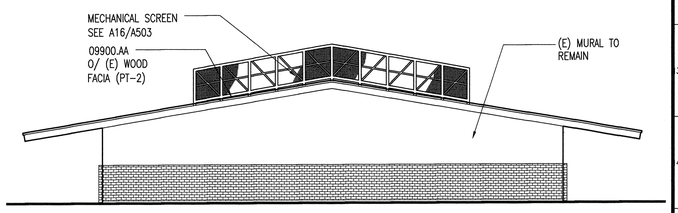

EXTERIOR ELEVATION — A16
BUILDING I-J, 450 BUILDING — 1/8"=1'-0"

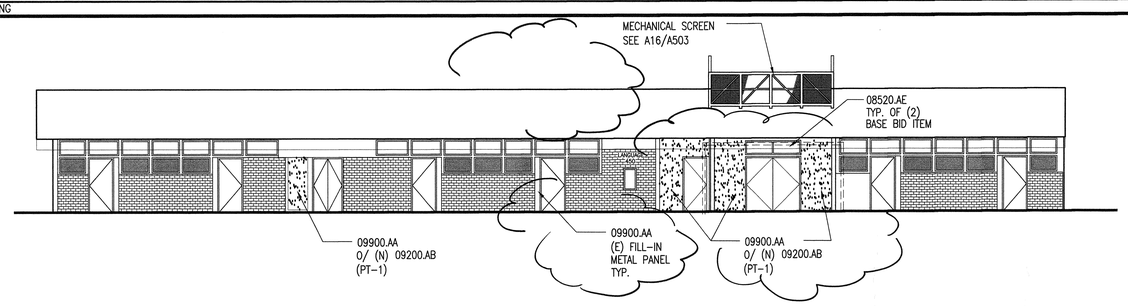

EXTERIOR ELEVATION — H19
BUILDING I-J, 450 BUILDING — 1/8"=1'-0"

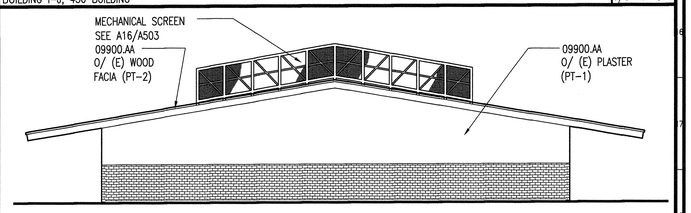

EXTERIOR ELEVATION — A19
BUILDING I-J, 450 BUILDING — 1/8"=1'-0"

KEYNOTES

KEYNOTES REFERENCE SPECIFICATION SECTIONS BY MEANS OF A FIVE-DIGIT NUMBER IDENTIFYING THE SECTION WHERE A MORE COMPLETE DESCRIPTION OF THE ITEM INDICATED WILL BE FOUND. THE LETTER SUFFIX OF THE KEYNOTE DOES NOT RELATE TO ANY CORRESPONDING REFERENCE LETTER IN THE SPECIFICATION. KEYNOTES DO NOT DESCRIBE CONSTRUCTION MEANS, METHODS, TECHNIQUES, SEQUENCES, OR PROCEDURES. NO TRADE JURISDICTIONAL ALLOCATION OF THIS WORK IS INTENDED BY THE SUBDIVISION OF THESE KEYNOTES. IT SHALL BE THE CONTRACTOR'S SOLE RESPONSIBILITY TO SUBDIVIDE THE WORK IN THE MANNER HE DEEMS NECESSARY.

DIVISION 8 – DOORS & WINDOWS

08520.AE NEW ALUMINUM WINDOW
08800.AD OBSCURED GLAZING

DIVISION 9 – FINISHES

09200.AB EXTERIOR PLASTER
09900.AA PAINT FINISH

EXTERIOR ELEVATIONS LEGEND

- CLEAR GLAZING REFER TO SECTION 08800
- OBSCURED GLAZING REFER TO SECTION 08800
- (E) EXTERIOR PLASTER PAINT PER SECTION 09900
- (N) EXTERIOR PLASTER REFER TO SECTION 09200 PAINT PER SECTION 09900
- (E) BRICK VENEER WALL TO REMAIN REFER TO SECTION 02070

EXTERIOR ELEVATIONS GENERAL NOTES

1) ALL WINDOWS ARE ALTERNATE BID ITEMS, UNLESS INDICATED ON EXTERIOR ELEVATIONS.
2) PAINT EXTERIOR PLASTER WALLS, ROOF FACIAS, AND METAL LOUVERS. REPAIR AS NECESSARY. REFER TO SPECIFICATION SECTION 09900.

KEY PLAN

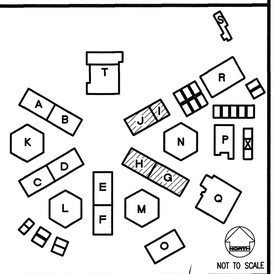

REVISED MAY 1 2 2004

IDENTIFICATION STAMP
DIV. OF THE STATE ARCHITECT
OFFICE OF REGULATION SERVICES
FILE NO. 19-H51
APPL. NO. 03-106434
AC. FLS. SS.
DATE

Dougherty + Dougherty
Architecture • Planning • Interior Design
2355 Westwood Blvd.
Suite 100
Los Angeles, CA 90064
(310) 475-1311
FAX (310) 475-1311

Copyright © 2002 Dougherty + Dougherty

Consultant Seal

Architect Seal

LA MIRADA HIGH SCHOOL
MODERNIZATION
NORWALK - LA MIRADA UNIFIED SCHOOL DISTRICT
13520 ADELFA DRIVE LA MIRADA, CA 90638

EXTERIOR ELEVATIONS
BLDGS. G-H & I-J

Date:	04-01-04
Job:	20237.50
Scale:	AS NOTED
Drawn:	
Revisions:	

A204

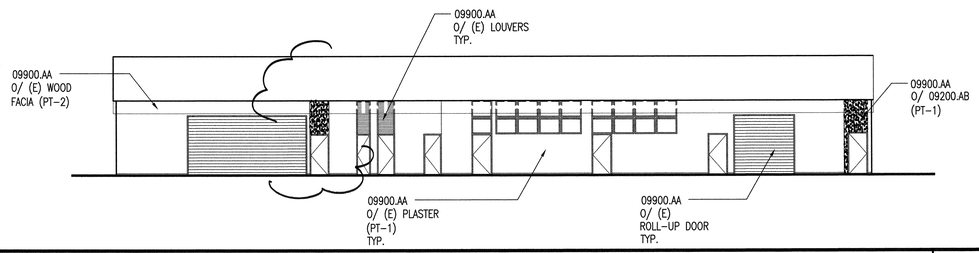

V4 **EXTERIOR ELEVATION** — BUILDING R, SHOP BLDG.

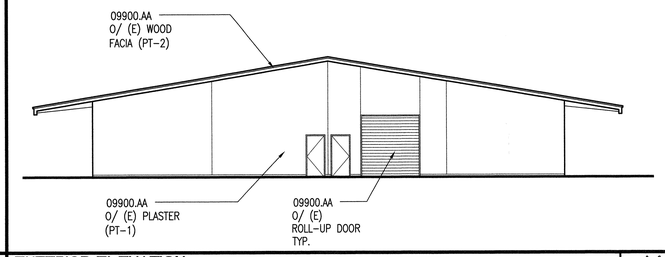

H4 **EXTERIOR ELEVATION** — BUILDING R, SHOP BLDG. — 1/8"=1'-0"

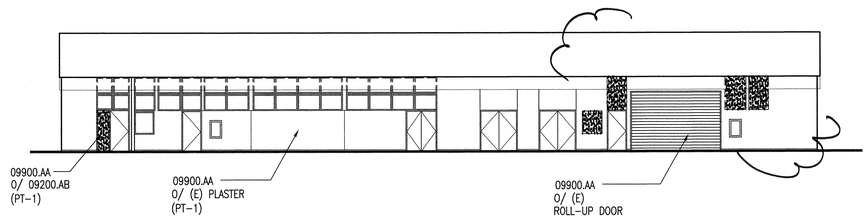

V8 **EXTERIOR ELEVATION** — BUILDING R, SHOP BLDG.

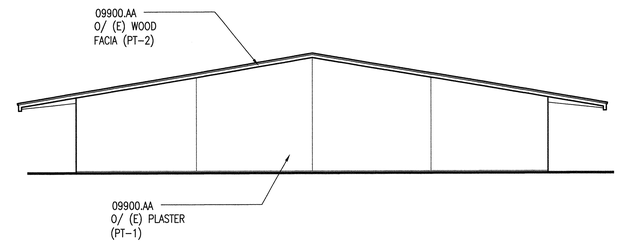

H8 **EXTERIOR ELEVATION** — BUILDING R, SHOP BLDG. — 1/8"=1'-0"

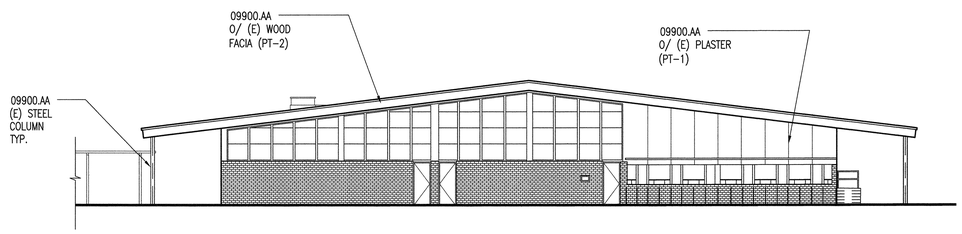

EXTERIOR ELEVATION — BUILDING T, MULTIPURPOSE BLDG.

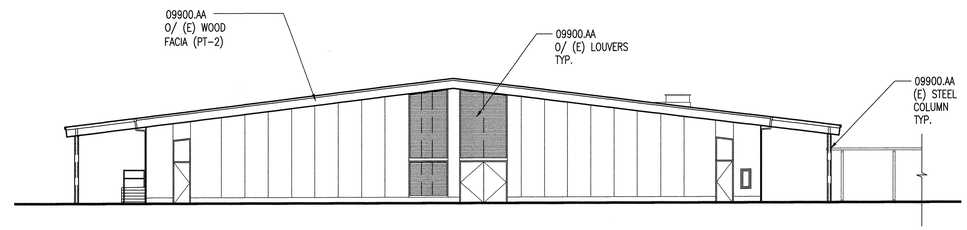

M12 **EXTERIOR ELEVATION** — BUILDING T, MULTIPURPOSE BLDG. — 1/8"=1'-0"

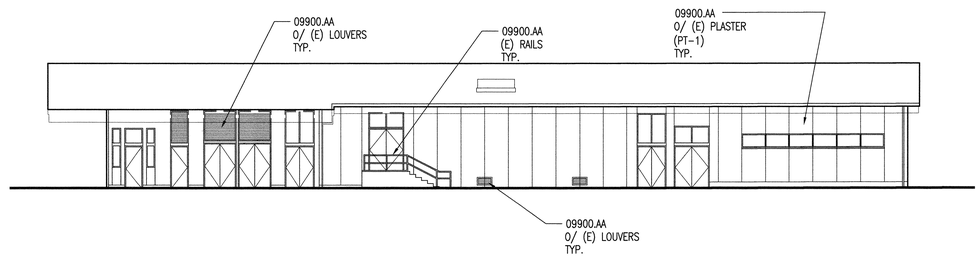

EXTERIOR ELEVATION — BUILDING T, MULTIPURPOSE BLDG.

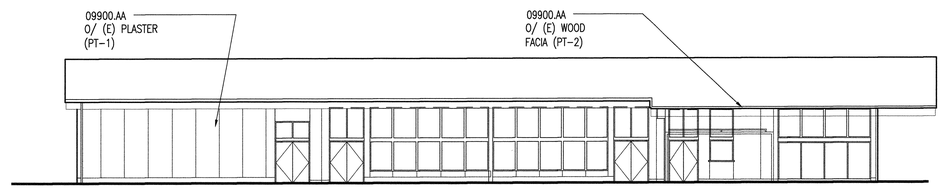

A16 **EXTERIOR ELEVATION** — BUILDING T, MULTIPURPOSE BLDG. — 1/8"=1'-0"

V19 | R19 | M19 | H19 | E19 | A19

KEYNOTES

KEYNOTES REFERENCE SPECIFICATION SECTIONS BY MEANS OF A FIVE-DIGIT NUMBER IDENTIFYING THE SECTION WHERE A MORE COMPLETE DESCRIPTION OF THE ITEM INDICATED WILL BE FOUND. THE LETTER SUFFIX OF THE KEYNOTE DOES NOT RELATE TO ANY CORRESPONDING REFERENCE LETTER IN THE SPECIFICATION. KEYNOTES DO NOT DESCRIBE CONSTRUCTION MEANS, METHODS, TECHNIQUES, SEQUENCES, OR PROCEDURES. NO TRADE JURISDICTIONAL ALLOCATION OF THIS WORK IS INTENDED BY THE SUBDIVISION OF THESE KEYNOTES. IT SHALL BE THE CONTRACTOR'S SOLE RESPONSIBILITY TO SUBDIVIDE THE WORK IN THE MANNER HE DEEMS NECESSARY.

DIVISION 9 - FINISHES

09200.AB EXTERIOR PLASTER
09900.AA PAINT FINISH

EXTERIOR ELEVATIONS LEGEND

- CLEAR GLAZING REFER TO SECTION 08800
- OBSCURED GLAZING REFER TO SECTION 08800
- (E) EXTERIOR PLASTER PAINT PER SECTION 09900
- (N) EXTERIOR PLASTER REFER TO SECTION 09200 PAINT PER SECTION 09900
- (E) BRICK VENEER WALL TO REMAIN REFER TO SECTION 02070

EXTERIOR ELEVATIONS GENERAL NOTES

1) ALL WINDOWS ARE ALTERNATE BID ITEMS, UNLESS INDICATED ON EXTERIOR ELEVATIONS.
2) PAINT EXTERIOR PLASTER WALLS, ROOF FACIAS, AND METAL LOUVERS. REPAIR AS NECESSARY. REFER TO SPECIFICATION SECTION 09900.

KEY PLAN

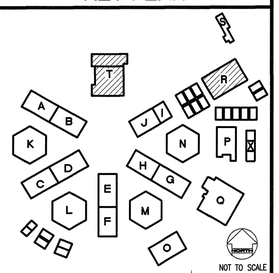

NOT TO SCALE

REVISED
MAY 1 2 2004

IDENTIFICATION STAMP
DIV. OF THE STATE ARCHITECT
OFFICE OF REGULATION SERVICES
FILE NO. 19-H51
APPL. NO. 03-106434
AC. N FLS. N/T SS.
DATE

Dougherty ■ Dougherty
Architecture • Planning • Interior Design
3194-D Airport Loop Drive
Costa Mesa, CA 92626
(714) 427-0277

Copyright © 2002 Dougherty + Dougherty

REGISTERED PROFESSIONAL ENGINEER — CIVIL — STRUCTURAL — MECHANICAL — ELECTRICAL — ARCHITECT — LANDSCAPE ARCHITECT — GEOTECHNICAL — CONSTRUCTION MANAGER — CONSULTANT — SURVEYOR — GEOLOGIST — GEOPHYSICIST — MATERIALS TESTING — STATE OF CALIFORNIA — NO. C-8824

Architect Seal

Consultant Seal

LA MIRADA HIGH SCHOOL
MODERNIZATION
NORWALK - LA MIRADA UNIFIED SCHOOL DISTRICT
13520 ADELFA DRIVE LA MIRADA, CA 90638

EXTERIOR ELEVATIONS
BLDGS. R & T

Date:	04-01-04
Job:	20237.50
Scale:	AS NOTED
Drawn:	
Revisions:	

A205

Y:\2002 Projects\20237.5 LMHS\20237SA205.dwg, 05/04/2004 03:36:13 PM

V4	R4	M4	H4	E4	A8

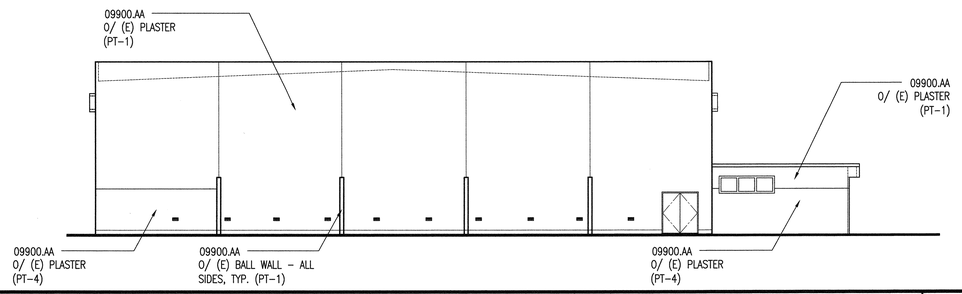

EXTERIOR ELEVATION — M8
BUILDING Q, GYMNASIUM BLDG. — 3/32"=1'-0"

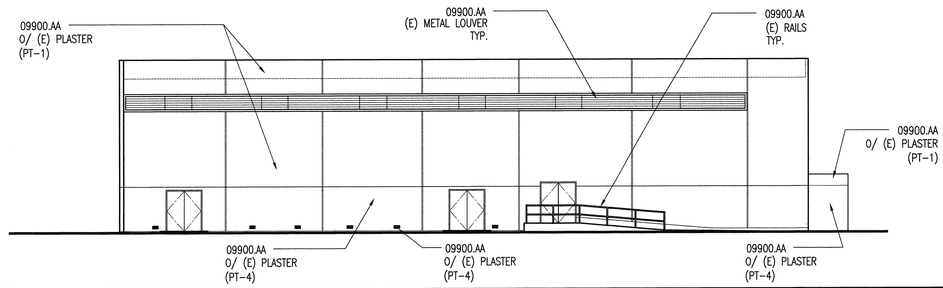

EXTERIOR ELEVATION — A8
BUILDING Q, GYMNASIUM BLDG.

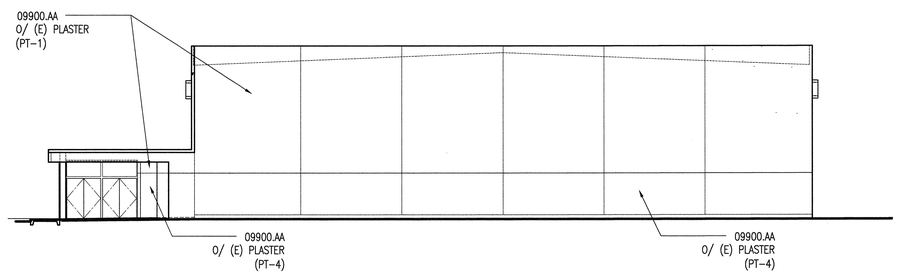

EXTERIOR ELEVATION — M12
BUILDING Q, GYMNASIUM BLDG.

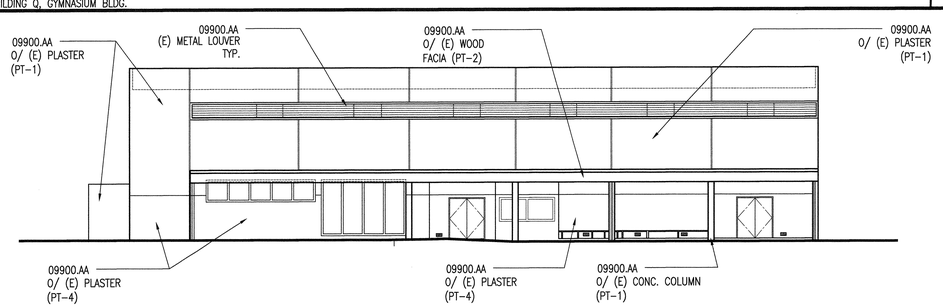

EXTERIOR ELEVATION — A12
BUILDING Q, GYMNASIUM BLDG.

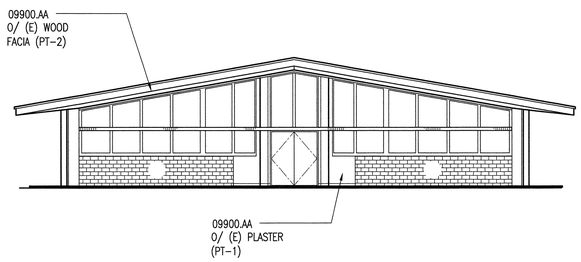

EXTERIOR ELEVATION — R16
BUILDING K, ADMINISTRATION BLDG. — 1/8"=1'-0"

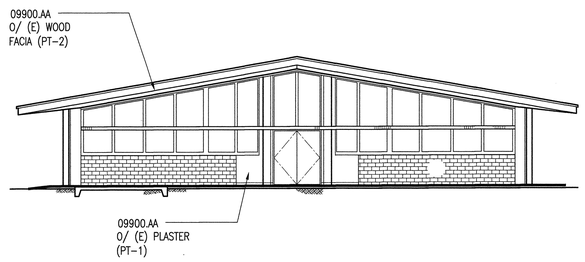

EXTERIOR ELEVATION — H16
BUILDING K, ADMINISTRATION BLDG. — 1/8"=1'-0"

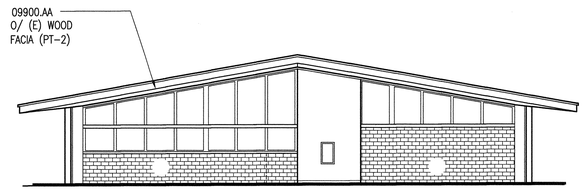

EXTERIOR ELEVATION — A16
BUILDING K, ADMINISTRATION BLDG. — 1/8"=1'-0"

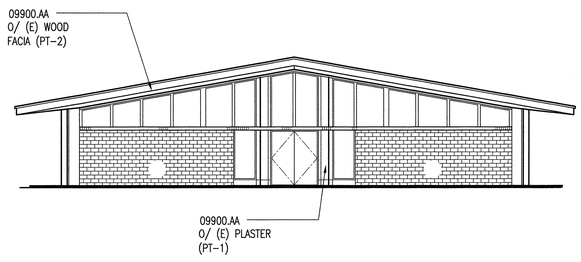

EXTERIOR ELEVATION — R19
BUILDING K, ADMINISTRATION BLDG. — 1/8"=1'-0"

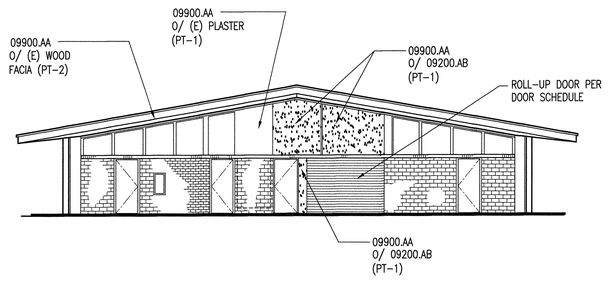

EXTERIOR ELEVATION — H19
BUILDING K, ADMINISTRATION BLDG. — 1/8"=1'-0"

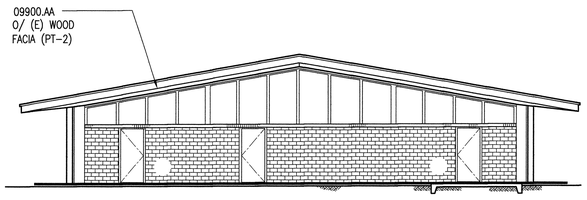

EXTERIOR ELEVATION — A19
BUILDING K, ADMINISTRATION BLDG. — 1/8"=1'-0"

KEYNOTES

KEYNOTES REFERENCE SPECIFICATION SECTIONS BY MEANS OF A FIVE-DIGIT NUMBER IDENTIFYING THE SECTION WHERE A MORE COMPLETE DESCRIPTION OF THE ITEM INDICATED WILL BE FOUND. THE LETTER SUFFIX OF THE KEYNOTE DOES NOT RELATE TO ANY CORRESPONDING REFERENCE LETTER IN THE SPECIFICATION. KEYNOTES DO NOT DESCRIBE CONSTRUCTION MEANS, METHODS, TECHNIQUES, SEQUENCES, OR PROCEDURES. NO TRADE JURISDICTIONAL ALLOCATION OF THIS WORK IS INTENDED BY THE SUBDIVISION OF THESE KEYNOTES. IT SHALL BE THE CONTRACTOR'S SOLE RESPONSIBILITY TO SUBDIVIDE THE WORK IN THE MANNER HE DEEMS NECESSARY.

DIVISION 9 - FINISHES

09200.AB EXTERIOR PLASTER
09900.AA PAINT FINISH

EXTERIOR ELEVATIONS LEGEND

- CLEAR GLAZING — REFER TO SECTION 08800
- OBSCURED GLAZING — REFER TO SECTION 08800
- (E) EXTERIOR PLASTER — PAINT PER SECTION 09900
- (N) EXTERIOR PLASTER — REFER TO SECTION 09200, PAINT PER SECTION 09900
- (E) BRICK VENEER WALL TO REMAIN — REFER TO SECTION 02070

EXTERIOR ELEVATIONS GENERAL NOTES

1) ALL WINDOWS ARE ALTERNATE BID ITEMS, UNLESS INDICATED ON EXTERIOR ELEVATIONS.
2) PAINT EXTERIOR PLASTER WALLS, ROOF FACIAS, AND METAL LOUVERS. REPAIR AS NECESSARY. REFER TO SPECIFICATION SECTION 09900.

KEY PLAN

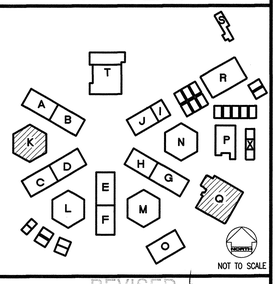

REVISED 3
MAY 12 2004

IDENTIFICATION STAMP
DIV. OF THE STATE ARCHITECT
OFFICE OF REGULATION SERVICES
FILE NO. 19-H51
APPL. NO. 03-106434
AC. FLS. SS.
DATE

Dougherty + Dougherty
Architecture • Planning • Interior Design
2134 E. Airport Drive
Suite 100
Santa Ana, CA 92705
(714) 427-0277

Copyright © 2002 Dougherty + Dougherty

REGISTERED ARCHITECT
STEPHEN KARPERT SOBOTA
C-9804
REGISTERED PROFESSIONAL ENGINEER
STATE OF CALIFORNIA

Consultant Seal

Architect Seal

LA MIRADA HIGH SCHOOL
MODERNIZATION
NORWALK - LA MIRADA UNIFIED SCHOOL DISTRICT
13520 ADELFA DRIVE LA MIRADA, CA 90638

EXTERIOR ELEVATIONS
BLDGS. K & Q

Date:	04-01-04
Job:	20237.50
Scale:	AS NOTED
Drawn:	
Revisions:	
1	12-01-03

A206

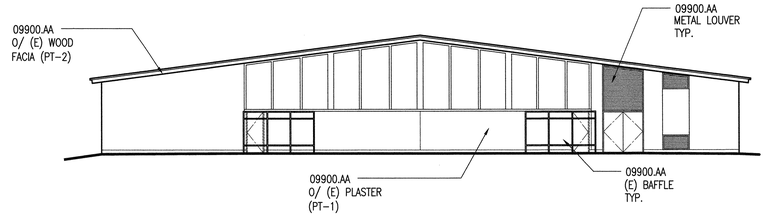

V4 **EXTERIOR ELEVATION** H4
BUILDING O, GIRL'S SHOWER & LOCKER BLDG. 1/8"=1'-0"

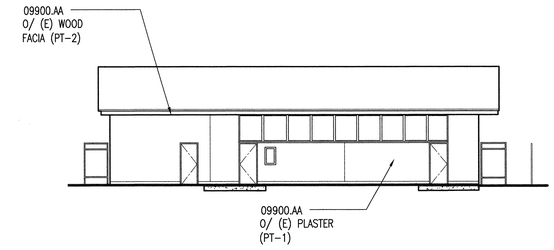

EXTERIOR ELEVATION A4
BUILDING O, GIRL'S SHOWER & LOCKER BLDG. 1/8"=1'-0"

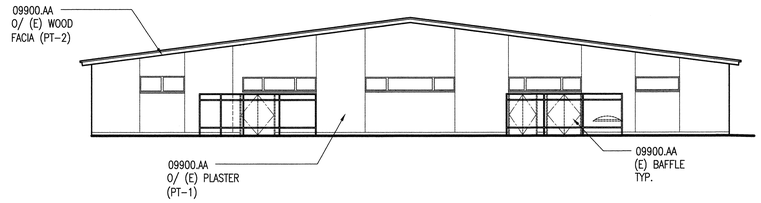

V8 **EXTERIOR ELEVATION** H8
BUILDING O, GIRL'S SHOWER & LOCKER BLDG. 1/8"=1'-0"

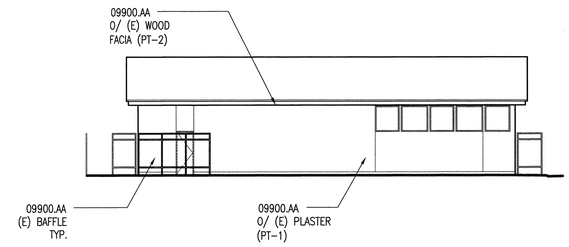

EXTERIOR ELEVATION A8
BUILDING O, GIRL'S SHOWER & LOCKER BLDG. 1/8"=1'-0"

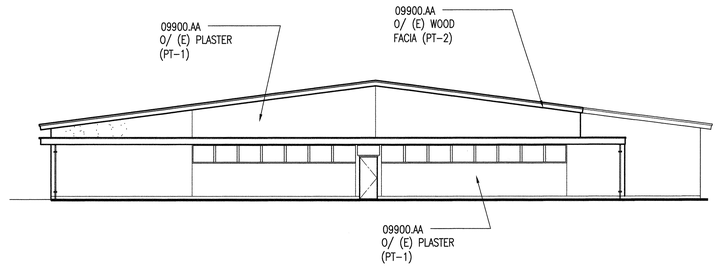

EXTERIOR ELEVATION M12
BUILDING P, BOY'S SHOWERS & LOCKER BLDG. 1/8"=1'-0"

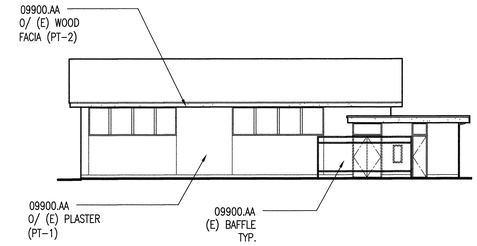

EXTERIOR ELEVATION A12
BUILDING P, BOY'S SHOWERS & LOCKER BLDG. 1/8"=1'-0"

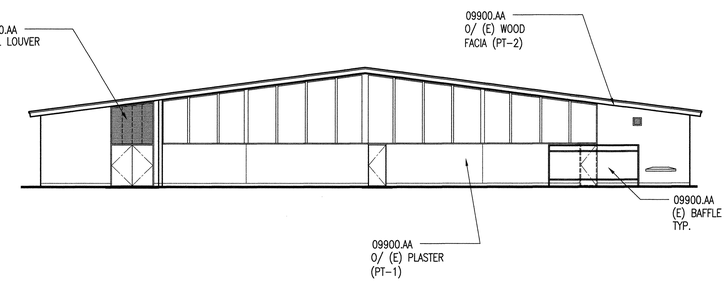

EXTERIOR ELEVATION M16
BUILDING P, BOY'S SHOWERS & LOCKER BLDG. 1/8"=1'-0"

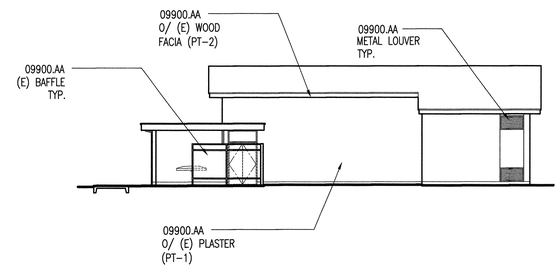

EXTERIOR ELEVATION A16
BUILDING P, BOY'S SHOWERS & LOCKER BLDG. 1/8"=1'-0"

V19 R19 M19 H19 E19 A19

KEYNOTES

KEYNOTES REFERENCE SPECIFICATION SECTIONS BY MEANS OF A FIVE-DIGIT NUMBER IDENTIFYING THE SECTION WHERE A MORE COMPLETE DESCRIPTION OF THE ITEM INDICATED WILL BE FOUND. THE LETTER SUFFIX OF THE KEYNOTE DOES NOT RELATE TO ANY CORRESPONDING REFERENCE LETTER IN THE SPECIFICATION. KEYNOTES DO NOT DESCRIBE CONSTRUCTION MEANS, METHODS, TECHNIQUES, SEQUENCES, OR PROCEDURES. NO TRADE JURISDICTIONAL ALLOCATION OF THIS WORK IS INTENDED BY THE SUBDIVISION OF THESE KEYNOTES. IT SHALL BE THE CONTRACTOR'S SOLE RESPONSIBILITY TO SUBDIVIDE THE WORK IN THE MANNER HE DEEMS NECESSARY.

DIVISION 9 – FINISHES

09900.AA PAINT FINISH

EXTERIOR ELEVATIONS LEGEND

- CLEAR GLAZING REFER TO SECTION 08800
- OBSCURED GLAZING REFER TO SECTION 08800
- (E) EXTERIOR PLASTER PAINT PER SECTION 09900
- (N) EXTERIOR PLASTER REFER TO SECTION 09200 PAINT PER SECTION 09900
- (E) BRICK VENEER WALL TO REMAIN REFER TO SECTION 02070

EXTERIOR ELEVATIONS GENERAL NOTES

1) ALL WINDOWS ARE ALTERNATE BID ITEMS, UNLESS INDICATED ON EXTERIOR ELEVATIONS.
2) PAINT EXTERIOR PLASTER WALLS, ROOF FACIAS, AND METAL LOUVERS. REPAIR AS NECESSARY. REFER TO SPECIFICATION SECTION 09900.

KEY PLAN

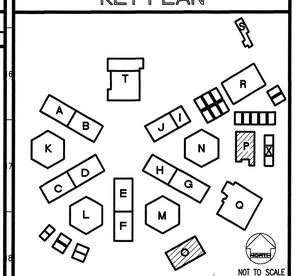

REVISED
IDENTIFICATION STAMP
DIV. OF THE STATE ARCHITECT
OFFICE OF REGULATION SERVICES
FILE NO. 19-H51
APPL. NO. 03-106434
AC. FLS. SS.
DATE
MAY 12 2004

Dougherty ■ Dougherty
Architecture · Planning · Interior Design
3536 Airport Drive
Santa Ana, CA 92705
(714) 427-0277

Copyright © 2002 Dougherty + Dougherty

Architect Seal

Consultant Seal

LA MIRADA HIGH SCHOOL
MODERNIZATION
NORWALK - LA MIRADA UNIFIED SCHOOL DISTRICT
13520 ADELFA DRIVE LA MIRADA, CA 90638

EXTERIOR ELEVATIONS BLDGS. O & P

Date:	04-01-04
Job:	20237.50
Scale:	AS NOTED
Drawn:	
Revisions:	
1	12-01-03

A207

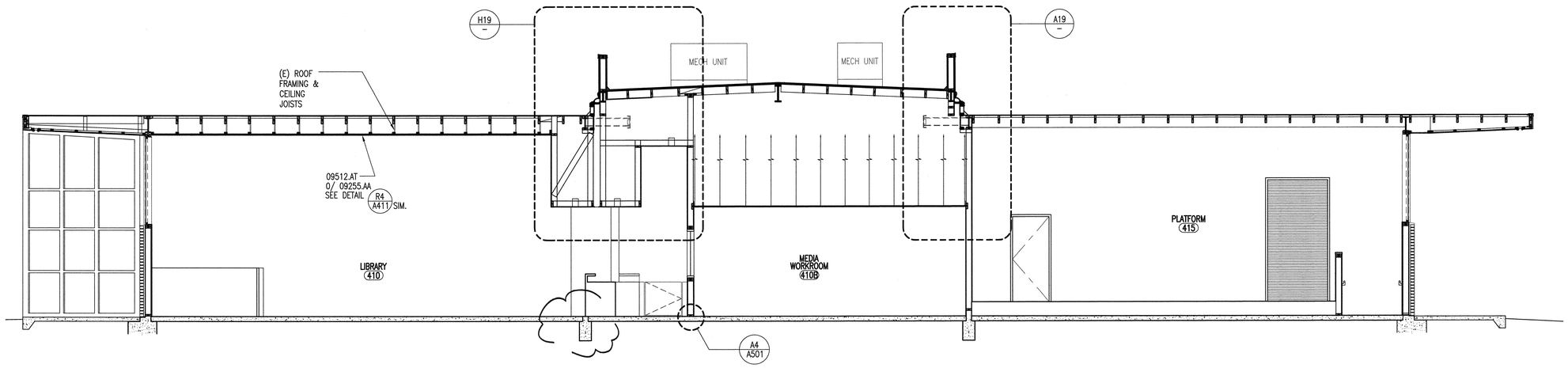

BUILDING SECTION

BUILDING N, LIBRARY

A8 1/4"=1'-0"

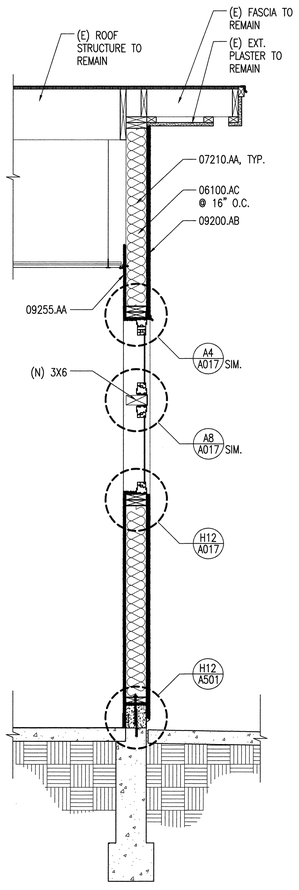

WALL SECTION

BUILDING C-D, 150 BUILDING

S19 3/4"=1'-0"

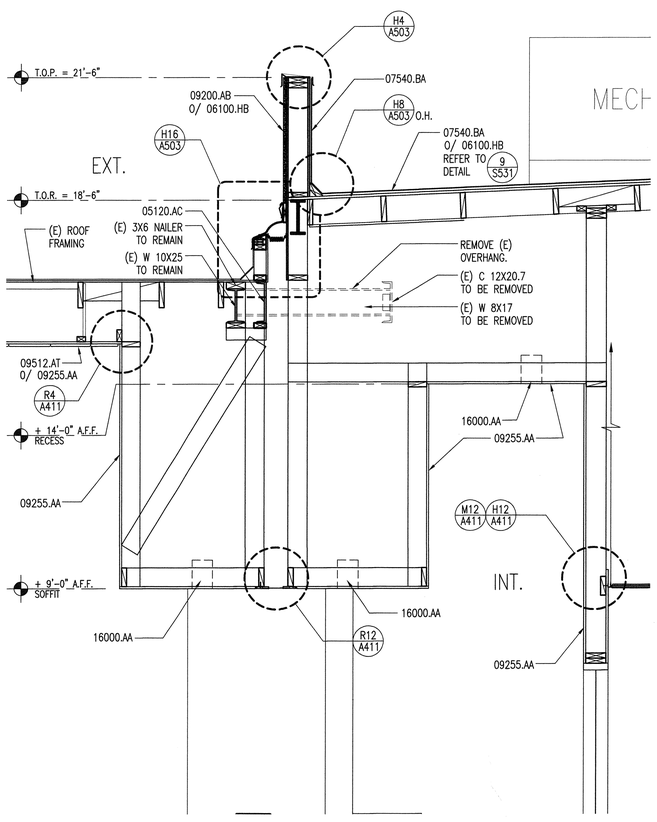

WALL SECTION

BUILDING N, LIBRARY/DRAMA BUILDING

H19 3/4"=1'-0"

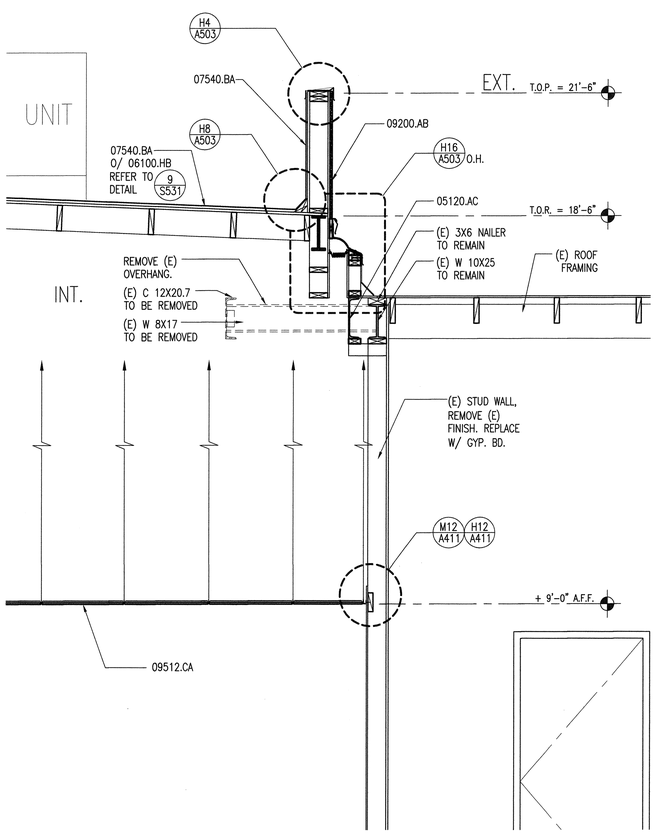

WALL SECTION

BUILDING N, LIBRARY/DRAMA BUILDING

A19 3/4"=1'-0"

KEYNOTES

KEYNOTES REFERENCE SPECIFICATION SECTIONS BY MEANS OF A FIVE-DIGIT NUMBER IDENTIFYING THE SECTION WHERE A MORE COMPLETE DESCRIPTION OF THE ITEM INDICATED WILL BE FOUND. THE LETTER SUFFIX OF THE KEYNOTE DOES NOT RELATE TO ANY CORRESPONDING REFERENCE LETTER IN THE SPECIFICATION. KEYNOTES DO NOT DESCRIBE CONSTRUCTION MEANS, METHODS, TECHNIQUES, SEQUENCES, OR PROCEDURES. NO TRADE JURISDICTIONAL ALLOCATION OF THIS WORK IS INTENDED BY THE SUBDIVISION OF THESE KEYNOTES. IT SHALL BE THE CONTRACTOR'S SOLE RESPONSIBILITY TO SUBDIVIDE THE WORK IN THE MANNER HE DEEMS NECESSARY.

DIVISION 5 – METALS

05120.AC STEEL CHANNEL – SEE STRUCTURAL

DIVISION 6 – WOOD & PLASTICS

06100.AC 2X6 WOOD STUD
06100.HB PLYWOOD SHEATHING – SEE STRUCTURAL

DIVISION 7 – THERMAL & MOISTURE PROTECTION

07210.AA R-11 (3-1/2") THERMAL INSULATION
07540.BA SBS MODIFIED BITUMEN ROOFING

DIVISION 9 – FINISHES

09200.AB EXTERIOR PLASTER
09255.AA 5/8" TYPE "X" GYPSUM BOARD
09512.AT ACOUSTICAL TILES
09512.CA LAY-IN ACOUSTICAL CEILING TILE

DIVISION 16 – ELECTRICAL

16000.AA INTERIOR LIGHT FIXTURE – SEE ELECTRICAL

KEY PLAN

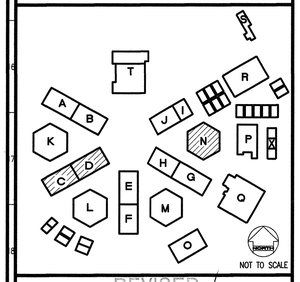

REVISED

IDENTIFICATION STAMP
DIV. OF THE STATE ARCHITECT
OFFICE OF REGULATION SERVICES
FILE NO. 19-H51
APPL. NO. 03-106434
AC. FLS. SS.
DATE MAY 1 2 2004

Dougherty ■ Dougherty
Architecture • Planning • Interior Design
3194-D Airport Loop Drive
Costa Mesa, CA 92626
(714) 425-0277

Copyright © 2002 Dougherty + Dougherty

Consultant Seal

Architect Seal

LA MIRADA HIGH SCHOOL MODERNIZATION
NORWALK - LA MIRADA UNIFIED SCHOOL DISTRICT
13520 ADELFA DRIVE LA MIRADA, CA 90638

WALL & BUILDING SECTIONS
BLDG. N & C-D

Date:	04-01-04
Job:	20237.50
Scale:	AS NOTED
Drawn:	
Revisions:	

A211

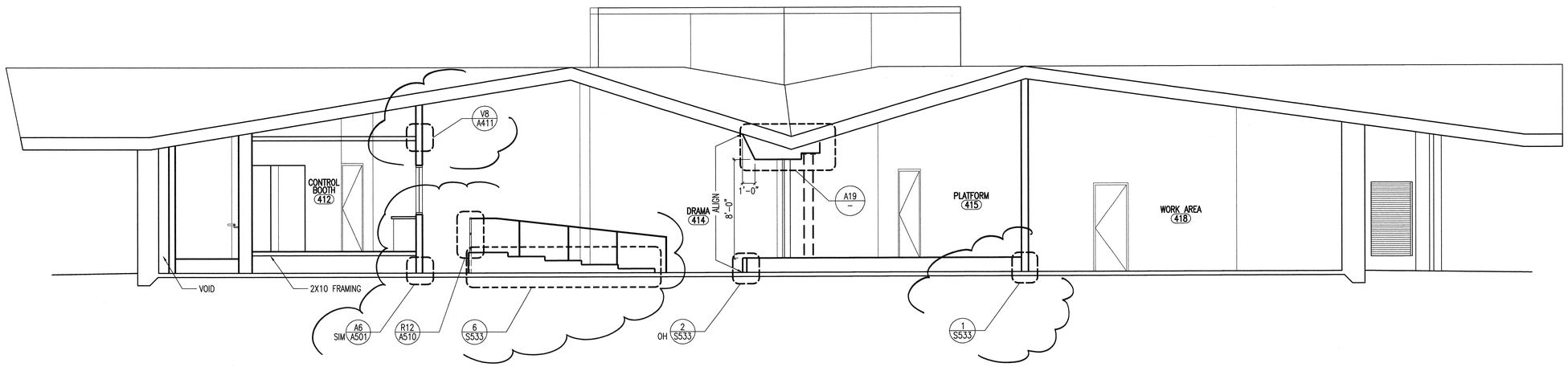

BUILDING SECTION — A8

BUILDING N – DRAMA — 1/4"=1'-0"

	V12		R12		M12		H12		E12		A12
											SCALE
	V16		R16		M16		H16		E16		A16
	V19		R19		M19		H19				

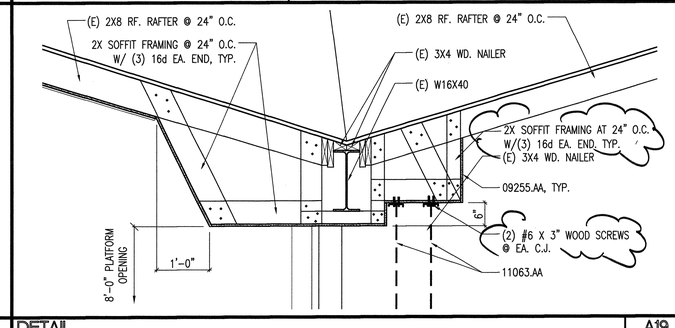

DETAIL — A19

PLATFORM OPENING — 3/4"=1'-0"

KEYNOTES

KEYNOTES REFERENCE SPECIFICATION SECTIONS BY MEANS OF A FIVE-DIGIT NUMBER IDENTIFYING THE SECTION WHERE A MORE COMPLETE DESCRIPTION OF THE ITEM INDICATED WILL BE FOUND. THE LETTER SUFFIX OF THE KEYNOTE DOES NOT RELATE TO ANY CORRESPONDING REFERENCE LETTER IN THE SPECIFICATION. KEYNOTES DO NOT DESCRIBE CONSTRUCTION MEANS, METHODS, TECHNIQUES, SEQUENCES, OR PROCEDURES. NO TRADE JURISDICTIONAL ALLOCATION OF THIS WORK IS INTENDED BY THE SUBDIVISION OF THESE KEYNOTES. IT SHALL BE THE CONTRACTOR'S SOLE RESPONSIBILITY TO SUBDIVIDE THE WORK IN THE MANNER HE DEEMS NECESSARY.

DIVISION 6 – WOOD & PLASTICS

06100.AC 2X6 WOOD STUD

DIVISION 9 – FINISHES

09255.AA 5/8" TYPE "X" GYPSUM BOARD

DIVISION 11 – EQUIPMENT

11063.AA STAGE CURTAIN

KEY PLAN

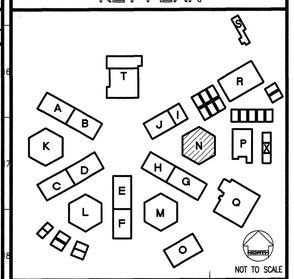

REVISED MAY 1 2 2004

IDENTIFICATION STAMP
DIV. OF THE STATE ARCHITECT
OFFICE OF REGULATION SERVICES
FILE NO. 19-H51
APPL. NO. 03-106434
ACCESS FLS. NLT SS
DATE

Dougherty ■■ Dougherty
Architecture • Planning • Interior Design
3194-D Airport Loop Drive
Costa Mesa, CA 92626
(714) 425-0277

Copyright © 2002 Dougherty + Dougherty

Consultant Seal

Architect Seal

LA MIRADA HIGH SCHOOL
MODERNIZATION
NORWALK - LA MIRADA UNIFIED SCHOOL DISTRICT
13520 ADELFA DRIVE LA MIRADA, CA 90638

WALL & BUILDING SECTIONS
BLDG. N

Date:	04-01-04
Job:	20237.50
Scale:	AS NOTED
Drawn:	
Revisions:	

A212

Y:\2002 Projects\20237.5 LMHS\20237SA212.dwg, 05/04/2004 10:35:11 PM

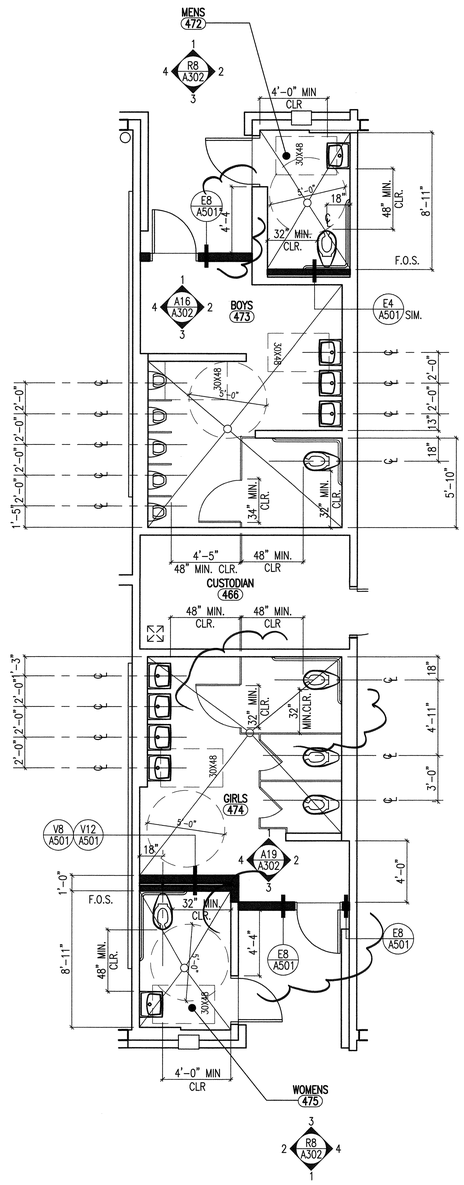

ENLARGED PLAN — R15
BUILDING J, 450 BUILDING — 1/4"=1'-0"

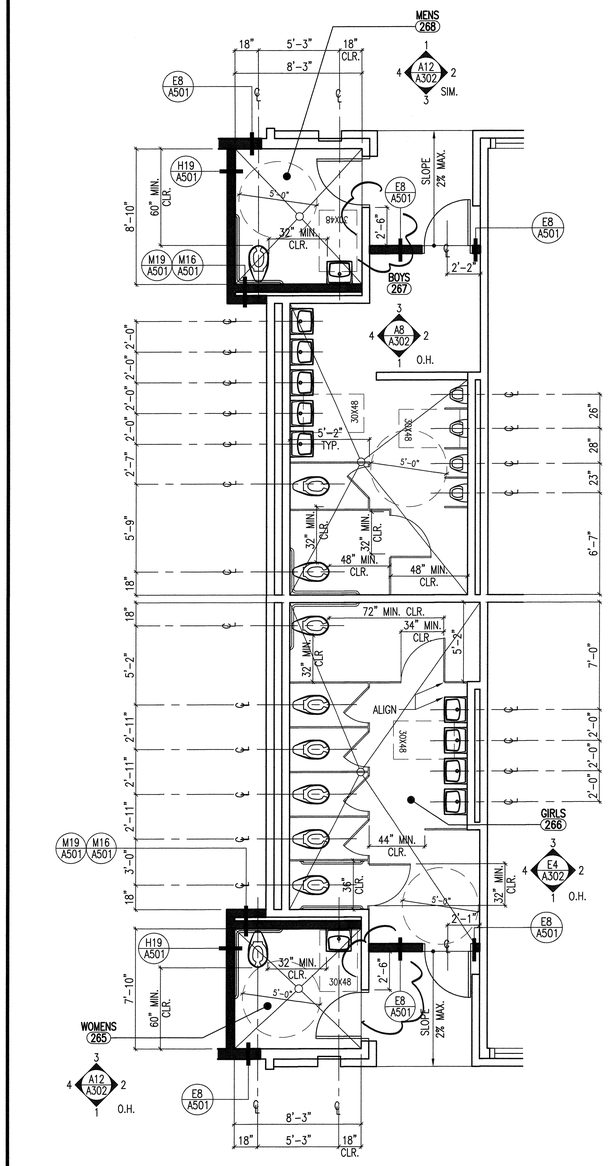

ENLARGED PLAN — H15
BUILDING E-F, 250 BUILDING — 1/4"=1'-0"

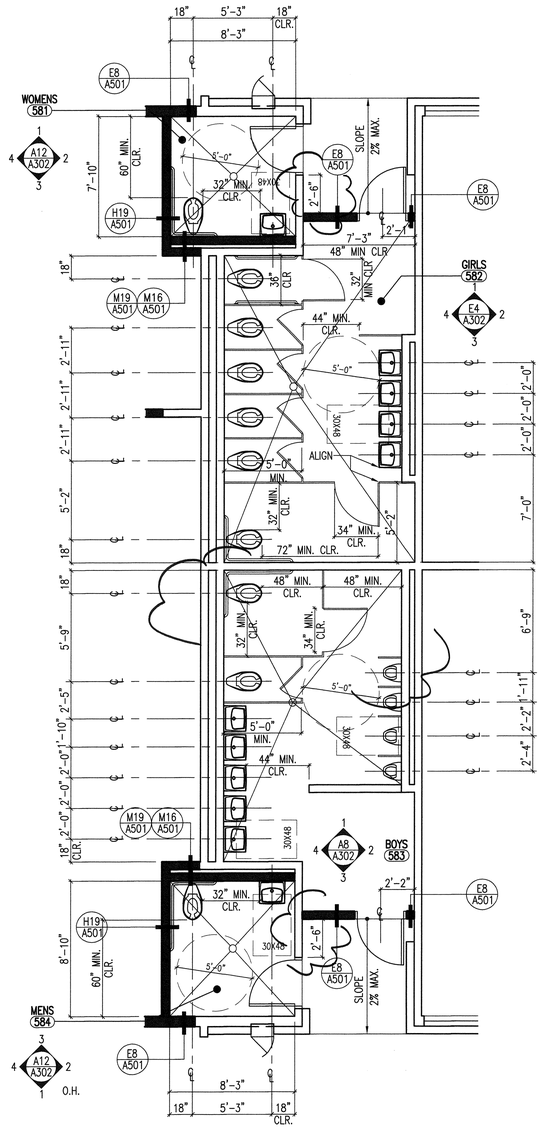

ENLARGED PLAN — A15
BUILDING A-B, 550 BUILDING — 1/4"=1'-0"

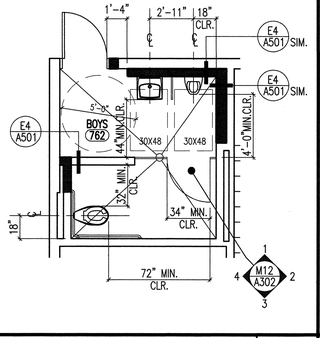

ENLARGED PLAN — V19
BUILDING R, SHOP — 1/4"=1'-0"

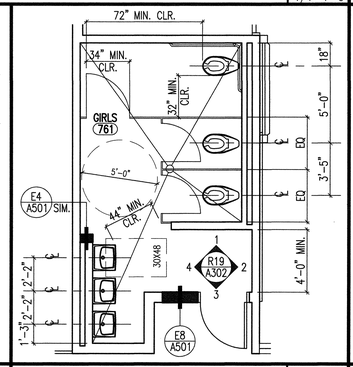

ENLARGED PLAN — R19
BUILDING R, SHOP — 1/4"=1'-0"

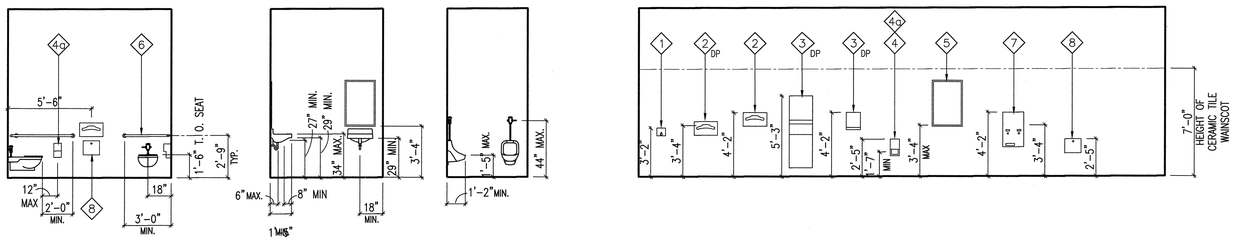

TOILET ROOM STANDARD ELEVATIONS - DISABLED ACCESSIBLE - ADULT — A19
1/4"=1'-0"

KEYNOTES

KEYNOTES REFERENCE SPECIFICATION SECTIONS BY MEANS OF A FIVE-DIGIT NUMBER IDENTIFYING THE SECTION WHERE A MORE COMPLETE DESCRIPTION OF THE ITEM INDICATED WILL BE FOUND. THE LETTER SUFFIX OF THE KEYNOTE DOES NOT RELATE TO ANY CORRESPONDING REFERENCE LETTER IN THE SPECIFICATION. KEYNOTES DO NOT DESCRIBE CONSTRUCTION MEANS, METHODS, TECHNIQUES, SEQUENCES, OR PROCEDURES. NO TRADE JURISDICTIONAL ALLOCATION OF THIS WORK IS INTENDED BY THE SUBDIVISION OF THESE KEYNOTES. IT SHALL BE THE CONTRACTOR'S SOLE RESPONSIBILITY TO SUBDIVIDE THE WORK IN THE MANNER HE DEEMS NECESSARY.

WALL LEGEND

- EXISTING WALL TO REMAIN
- NEW NON RATED WOOD STUD WALL
  EXT.: 2X6 @ 16" O.C. INFILL WALL W/
  EXTERIOR: PLASTER TO MATCH EXIST.
  INTERIOR: SEE FINISH SCHEDULE
  INT.: 2X6 @ 16" O.C. INFILL WALL
  FINISH PER FINISH SCHEDULE
  REFER TO SHEET A501 FOR ADDITIONAL INFORMATION
- NEW 1-HR RATED WOOD STUD WALL
  REFER TO SHEET A501 FOR ADDITIONAL INFORMATION

RESTROOM NOTES

1. FOR TYPICAL SYMBOLS AND ABBREVIATIONS, SEE SHEET G002.
2. REFER TO DETAILS A19/A301 FOR STANDARD MOUNTING HEIGHTS/DIMENSIONS
3. WATER CLOSET FLUSH CONTROLS SHALL BE MOUNTED TO THE WIDE SIDE OF ACCESSIBLE STALLS. COORDINATE LOCATION TO AVOID CONFLICT WITH GRAB BAR.
4. INSULATE HOT WATER & DRAIN PIPES. THERE SHALL BE NO SHARP OR ABRASIVE OBJECTS OR SURFACES UNDER LAVATORIES.
5. DIVISION 15 & 16 KEYNOTES ARE NUMBERED IN GENERAL TERMS ONLY, AND DO NOT NECESSARILY SPECIFICALLY REFER TO THE SECTION NUMBERS WITHIN THE SPECIFICATION. REFER TO MECHANICAL, PLUMBING & ELECTRICAL DRAWINGS AND SPECIFICATIONS FOR SPECIFIC INFORMATION.

TOILET ACCESSORIES

1. SOAP DISPENSER
2. TOILET SEAT COVER DISPENSER
3. PAPER TOWEL DISPENSER
4. TOILET PAPER DISPENSER
4a. D.P. RECESSED TOILET PAPER DISPENSER (MAX. 3" PROTRUSION FROM WALL, NON-CONTROLLED DELIVERY)
5. MIRROR / SHELF COMBINATION
6. GRAB BAR , SEE DETAIL M8/A510
7. SANITARY NAPKIN VENDOR
8. SANITARY NAPKIN DISPOSAL (RECESSED)
9. FOLDING SHOWER SEAT

KEY PLAN

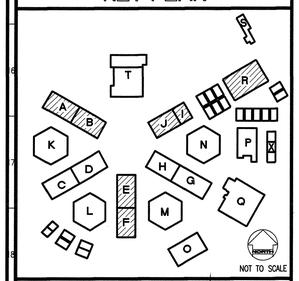

REVISED MAY 12 2004

IDENTIFICATION STAMP
DIV. OF THE STATE ARCHITECT
OFFICE OF REGULATION SERVICES
FILE NO. 19-H51
APPL. NO. 03-106434
AC. FLS. SS.
DATE

Dougherty ■ Dougherty
Architecture • Planning • Interior Design
3194-D Airport Loop Drive
Costa Mesa, CA 92626
(949) 476-0202

Copyright © 2002 Dougherty + Dougherty

Consultant Seal

Architect Seal

LA MIRADA HIGH SCHOOL
MODERNIZATION
NORWALK - LA MIRADA UNIFIED SCHOOL DISTRICT
13520 ADELFA DRIVE LA MIRADA, CA 90638

ENLARGED PLANS AND INTERIOR ELEVATIONS

Date:	04-01-04
Job:	20237.50
Scale:	AS NOTED
Drawn:	
Revisions:	

A301

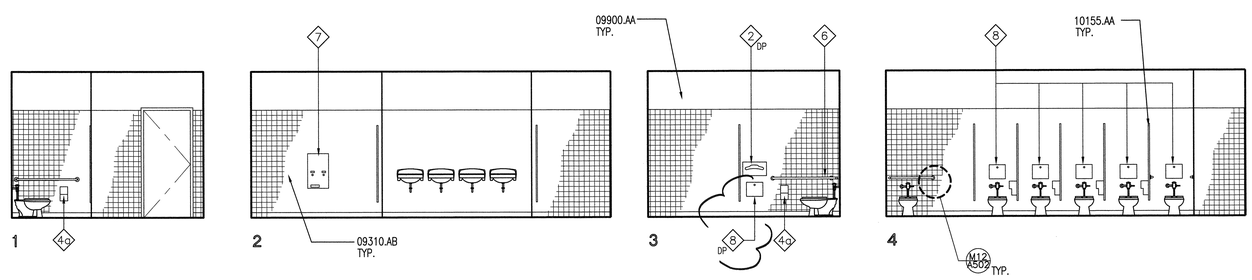

V4 INTERIOR ELEVATIONS
BUILDING A-B; GIRLS RM 582, BUILDING E-F; BOYS RM 266 — E4 — 1/4"=1'-0"

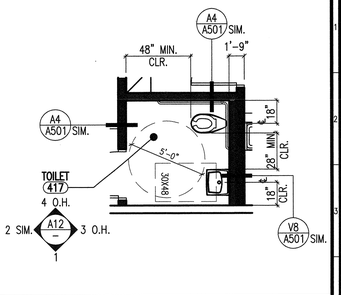

ENLARGED PLAN
BUILDING N: TOILET 417 — A4 — 1/4"=1'-0"

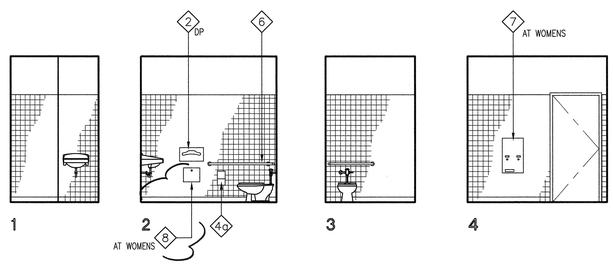

INTERIOR ELEVATIONS
BUILDING J, MENS RM 472, WOMENS RM 475 — R8 — 1/4"=1'-0"

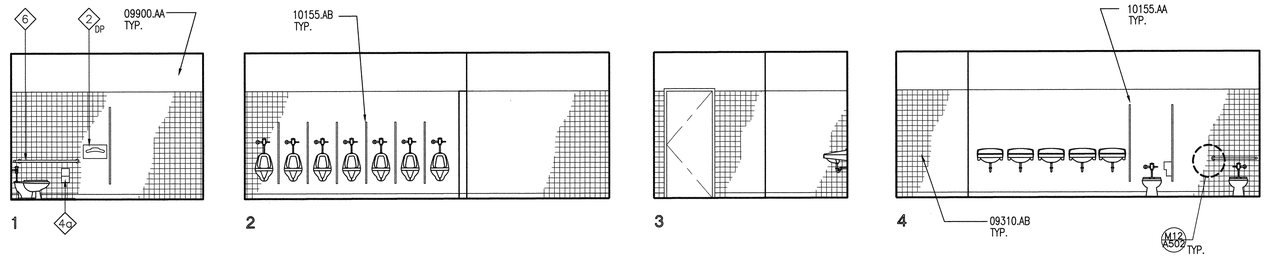

INTERIOR ELEVATIONS
BUILDING A-B; BOYS RM 583, BUILDING E-F; BOYS RM 267 — A8 — 1/4"=1'-0"

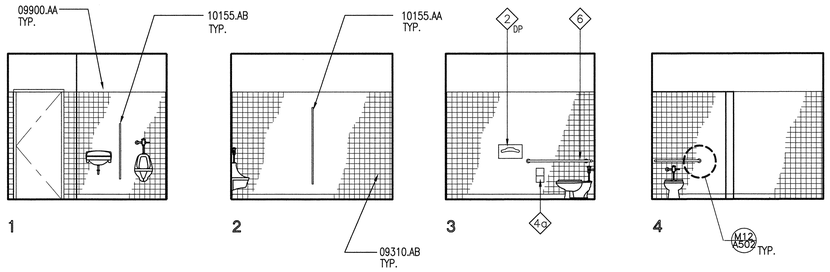

INTERIOR ELEVATIONS
BUILDING R, BOYS RM 762 — M12 — 1/4"=1'-0"

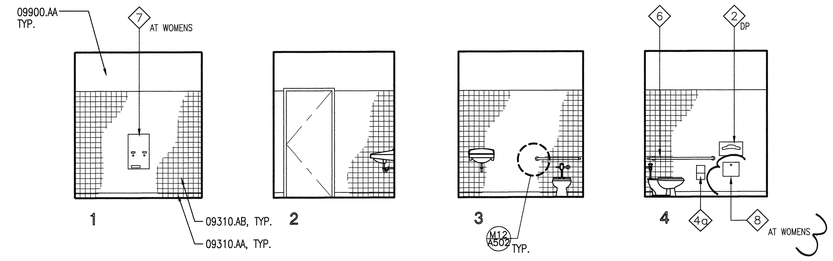

INTERIOR ELEVATIONS
BUILDING A-B: MENS RM 584, WOMENS RM 581; BUILDING E-F: MENS RM 268, WOMENS RM 265; BUILDING N: TOILET 417 SIM. (SEE FINISH SCHEDULE) — A12 — 1/4"=1'-0"

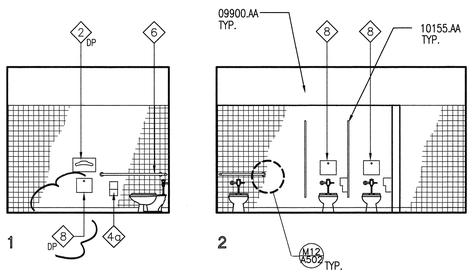

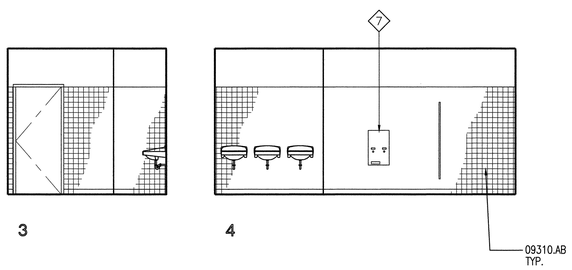

INTERIOR ELEVATIONS
BUILDING R, GIRLS RM 761 — R19 — 1/4"=1'-0"

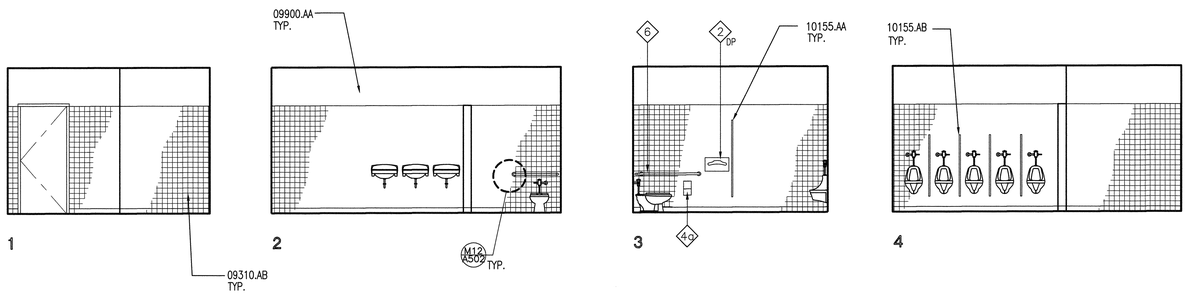

INTERIOR ELEVATIONS
BUILDING J, BOYS RM 473 — A16 — 1/4"=1'-0"

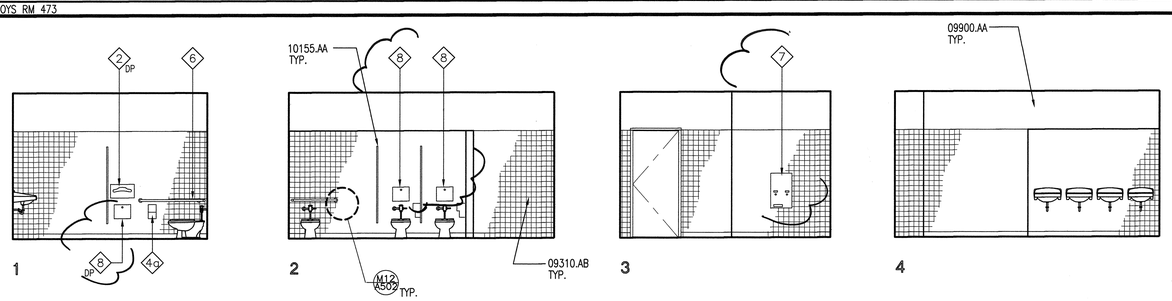

INTERIOR ELEVATIONS
BUILDING J, GIRLS RM 474 — A19 — 1/4"=1'-0"

KEYNOTES

KEYNOTES REFERENCE SPECIFICATION SECTIONS BY MEANS OF A FIVE-DIGIT NUMBER IDENTIFYING THE SECTION WHERE A MORE COMPLETE DESCRIPTION OF THE ITEM INDICATED WILL BE FOUND. THE LETTER SUFFIX OF THE KEYNOTE DOES NOT RELATE TO ANY CORRESPONDING REFERENCE LETTER IN THE SPECIFICATION. KEYNOTES DO NOT DESCRIBE CONSTRUCTION MEANS, METHODS, TECHNIQUES, SEQUENCES, OR PROCEDURES. NO TRADE JURISDICTIONAL ALLOCATION OF THIS WORK IS INTENDED BY THE SUBDIVISION OF THESE KEYNOTES. IT SHALL BE THE CONTRACTOR'S SOLE RESPONSIBILITY TO SUBDIVIDE THE WORK IN THE MANNER HE DEEMS NECESSARY.

DIVISION 9 – FINISHES

09310.AA CERAMIC TILE BASE
09310.AB CERAMIC TILE WAINSCOT
09900.AA PAINT FINISH

DIVISION 10 – SPECIALTIES

10155.AA TOILET PARTITION
10155.AB 14" URINAL PARTITION

RESTROOM NOTES

1. FOR TYPICAL SYMBOLS AND ABBREVIATIONS, SEE SHEET G002.
2. REFER TO DETAILS A19/A301 FOR STANDARD MOUNTING HEIGHTS/DIMENSIONS
3. WATER CLOSET FLUSH CONTROLS SHALL BE MOUNTED TO THE WIDE SIDE OF ACCESSIBLE STALLS. COORDINATE LOCATION TO AVOID CONFLICT WITH GRAB BAR.
4. INSULATE HOT WATER & DRAIN PIPES. THERE SHALL BE NO SHARP OR ABRASIVE OBJECTS OR SURFACES UNDER LAVATORIES.
5. DIVISION 15 & 16 KEYNOTES ARE NUMBERED IN GENERAL TERMS ONLY, AND DO NOT NECESSARILY SPECIFICALLY REFER TO THE SECTION NUMBERS WITHIN THE SPECIFICATION. REFER TO MECHANICAL, PLUMBING & ELECTRICAL DRAWINGS AND SPECIFICATIONS FOR SPECIFIC INFORMATION.

TOILET ACCESSORIES

1. SOAP DISPENSER
2. TOILET SEAT COVER DISPENSER
3. PAPER TOWEL DISPENSER
4. TOILET PAPER DISPENSER
4-a. D.P. RECESSED TOILET PAPER DISPENSER (MAX. 3" PROTRUSION FROM WALL, NON-CONTROLLED DELIVERY)
5. MIRROR / SHELF COMBINATION
6. GRAB BAR , SEE DETAIL M8/A510
7. SANITARY NAPKIN VENDOR
8. SANITARY NAPKIN DISPOSAL (RECESSED)
9. FOLDING SHOWER SEAT

KEY PLAN

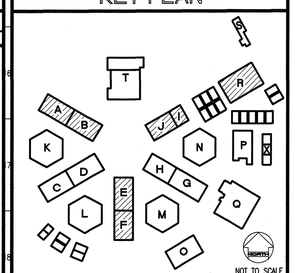

REVISED

IDENTIFICATION STAMP
DIV. OF THE STATE ARCHITECT
OFFICE OF REGULATION SERVICES
FILE NO. 19-H51
APPL. NO. 03-106434
AC. FLS. NLT SS.
DATE MAY 19 2004

Dougherty ■ Dougherty
Architecture • Planning • Interior Design
3194-D Airport Loop Drive
Costa Mesa, CA 92626
(714) 425-02-72

Copyright © 2002 Dougherty + Dougherty

Consultant Seal

LICENSED ARCHITECT — CALIFORNIA — C-8824 — STATE OF CALIFORNIA

Architect Seal

LA MIRADA HIGH SCHOOL
MODERNIZATION
NORWALK - LA MIRADA UNIFIED SCHOOL DISTRICT
13520 ADELFA DRIVE LA MIRADA, CA 90638

ENLARGED PLANS AND INTERIOR ELEVATIONS

Date:	04-01-04
Job:	20237.50
Scale:	AS NOTED
Drawn:	
Revisions:	

A302

Y:\2002 Projects\20237.5 LMHS\20237SA302.dwg, 05/04/2004 03:03:16 PM

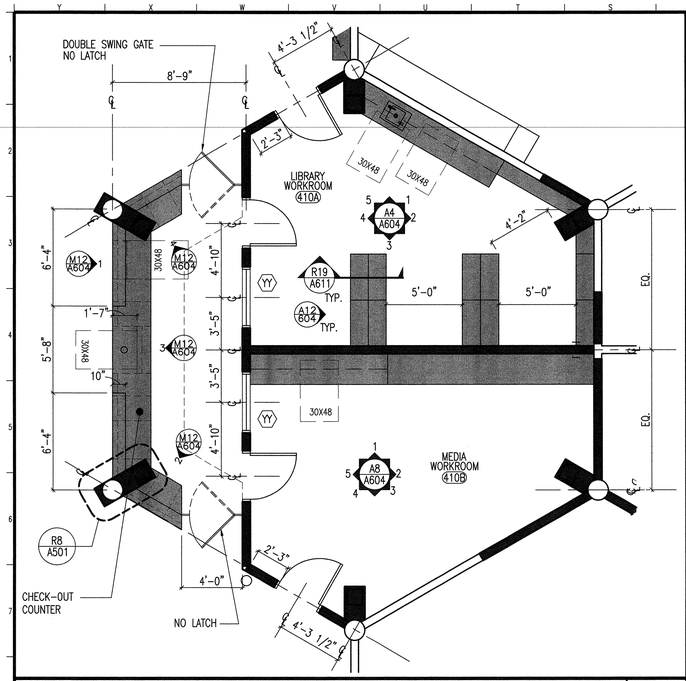

ENLARGED PLAN - BUILDNG N

LIBRARY WORKROOM 410A, MEDIA WORKROOM 410B, AND CIRCULATION DESK

R8 — 1/4"=1'-0"

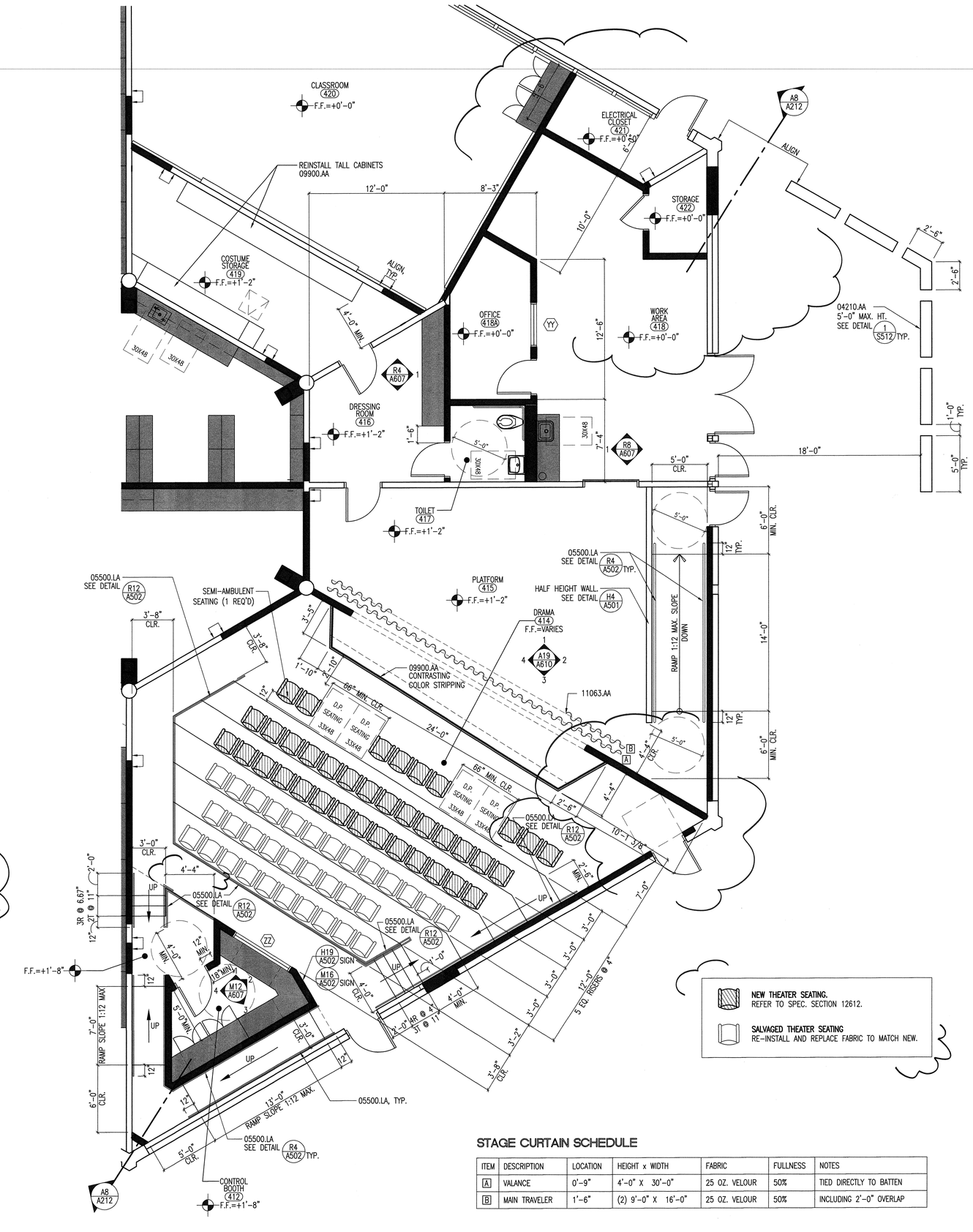

STAGE CURTAIN SCHEDULE

ITEM	DESCRIPTION	LOCATION	HEIGHT x WIDTH	FABRIC	FULLNESS	NOTES
A	VALANCE	0'-9"	4'-0" X 30'-0"	25 OZ. VELOUR	50%	TIED DIRECTLY TO BATTEN
B	MAIN TRAVELER	1'-6"	(2) 9'-0" X 16'-0"	25 OZ. VELOUR	50%	INCLUDING 2'-0" OVERLAP

ENLARGED PLAN - BUILDNG N

THEATER AREA

A19 — 1/4"=1'-0"

KEYNOTES

KEYNOTES REFERENCE SPECIFICATION SECTIONS BY MEANS OF A FIVE-DIGIT NUMBER IDENTIFYING THE SECTION WHERE A MORE COMPLETE DESCRIPTION OF THE ITEM INDICATED WILL BE FOUND. THE LETTER SUFFIX OF THE KEYNOTE DOES NOT RELATE TO ANY CORRESPONDING REFERENCE LETTER IN THE SPECIFICATION. KEYNOTES DO NOT DESCRIBE CONSTRUCTION MEANS, METHODS, TECHNIQUES, SEQUENCES, OR PROCEDURES. NO TRADE JURISDICTIONAL ALLOCATION OF THIS WORK IS INTENDED BY THE SUBDIVISION OF THESE KEYNOTES. IT SHALL BE THE CONTRACTOR'S SOLE RESPONSIBILITY TO SUBDIVIDE THE WORK IN THE MANNER HE DEEMS NECESSARY.

DIVISION 4 - MASONRY

04210.AA BRICK MASONRY WALL

DIVISION 5 - METALS

05500.LA PIPE HANDRAIL

DIVISION 9 - FINISHES

09900.AA PAINT FINISH

DIVISION 11 - EQUIPMENT

11063.AA STAGE CURTAIN

CONSTRUCTION NOTES

ALL DIMENSIONS TO (E) CONSTRUCTION ARE TO BE FIELD VERIFIED. CONTRACTOR SHALL INFORM ARCHITECT OF ANY SUBSTANTIAL DISCREPANCY BETWEEN FIELD DIMENSIONS AND DRAWINGS.

1) FOR TYP. SYMBOLS & ABBREVIATIONS, SEE SHEET G002
2) ALL ITEMS NOTED ARE NEW U.N.O.
3) PROTECT AND SAFEGUARD FROM DAMAGE ALL (E) FINISHES TO REMAIN.
4) FOR TYP. STUD WALL FRAMING & CONNECTIONS TO STRUCTURE, SEE SHEET A501.
5) PROVIDE SEALANT MATERIAL AT ALL PENETRATIONS THROUGH NEW & (E) WALLS AND HARD CEILINGS.
6) PATCH, RESURFACE & PAINT (E) WALLS DAMAGED BY CONSTRUCTION TO MATCH ADJACENT SURFACES.
7) DOORS & DOOR FRAMES:
   REPLACE ALL DOORS AND HARDWARE, U.N.O.
   (E) DOOR FRAMES TO REMAIN, U.N.O.
   REFER TO DOOR SCHEDULE SHEETS A012-A015.
8) WINDOWS:
   REPLACE ALL EXT. WINDOWS AND FRAMES, U.N.O.
   REFER TO WINDOW SCHEDULE SHEET A016.
9) CASEWORK:
   REPLACE (E) COUNTERTOPS WITH NEW PLASTIC LAMINATE COUNTERTOPS U.N.O. SAND, STRIP, PATCH AND PAINT INTERIOR AND EXTERIOR OF ALL (E) CASEWORK TO REMAIN. REPLACE DAMAGED OR MISSING DOORS. SOLVENT CLEAN AND REUSE ALL (E) HARDWARE. PROVIDE NEW HARDWARE TO MATCH (E) WHERE MISSING.
10) LOCATE NEW MARKERBOARDS AND TACKBOARDS AS INDICATED ON THE PLANS AND INTERIOR ELEVATIONS.
11) TOILET ROOMS:
   PROVIDE NEW FIXTURES, FINISHES, PARTITIONS & ACCESSORIES U.N.O., COORDINATE WITH PLUMB. DWGS.
12) PROVIDE FIRE EXTINGUISHERS PER SPECIFICATIONS SECTION 10522

WALL LEGEND

- EXISTING WALL TO REMAIN
- NEW NON RATED WOOD STUD WALL
  EXT.: 2X6 @ 16" O.C. INFILL WALL W/
  EXTERIOR: PLASTER TO MATCH EXISTING
  INTERIOR: SEE FINISH SCHEDULE
  INT.: 2X6 @ 16" O.C. INFILL WALL W/
  FINISH PER FINISH SCHEDULE
  REFER TO SHEET A501 FOR ADDITIONAL INFORMATION
- NEW 1-HR RATED WOOD STUD WALL
  REFER TO SHEET A501 FOR ADDITIONAL INFORMATION
- NEW CASEWORK
  SEE INT. ELEVS. FOR ADDITIONAL INFORMATION

KEY PLAN

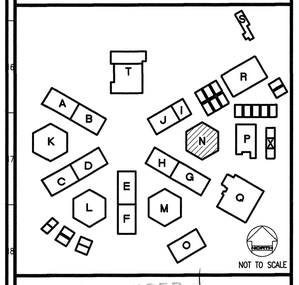

REVISED

IDENTIFICATION STAMP
DIV. OF THE STATE ARCHITECT
OFFICE OF REGULATION SERVICES

MAY 12 2004

FILE NO. 19-H51
APPL. NO. 03-106434
AC. FLS. SS.
DATE

Dougherty + Dougherty
Architecture · Planning · Interior Design
3194-D Airport Loop Drive
Costa Mesa, CA 92626
(714) 427-0277

Copyright © 2002 Dougherty + Dougherty

Consultant Seal

Architect Seal

LA MIRADA HIGH SCHOOL
MODERNIZATION
NORWALK - LA MIRADA UNIFIED SCHOOL DISTRICT
13520 ADELFA DRIVE LA MIRADA, CA 90638

BUILDING N
ENLARGED PLANS

Date:	04-01-04
Job:	20237.50
Scale:	AS NOTED
Drawn:	
Revisions:	

A303

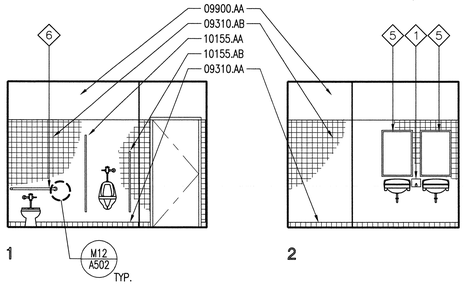

INTERIOR ELEVATIONS — F4

BUILDING K: WOMENS TOILET 833 — 1/4"=1'-0"

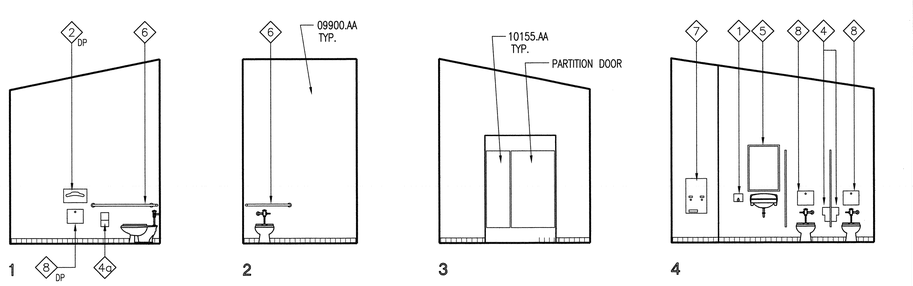

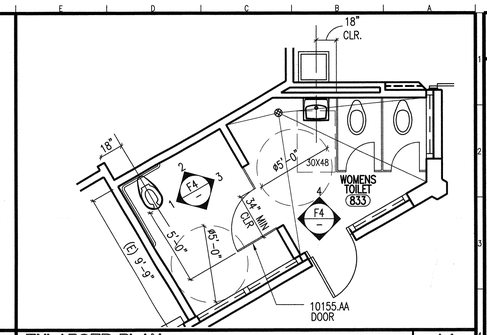

ENLARGED PLAN — A4

BUILDING K: WOMENS TOILET 833 — 1/4"=1'-0"

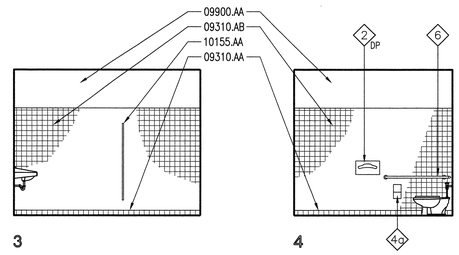

INTERIOR ELEVATIONS — S8

BUILDING P: BOYS TOILET 613 — 1/4"=1'-0"

OMIT — H8

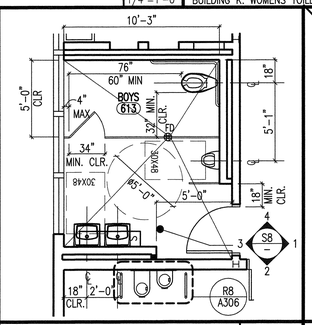

ENLARGED PLAN — E8

BUILDING P: BOYS TOILET 613 — 1/4"=1'-0"

OMIT — A8

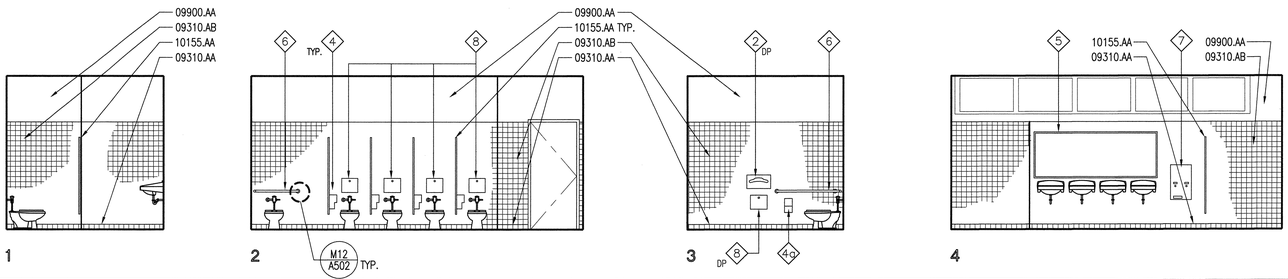

INTERIOR ELEVATIONS — H12

BUILDING Q: GIRLS TOILETS 633 — 1/4"=1'-0"

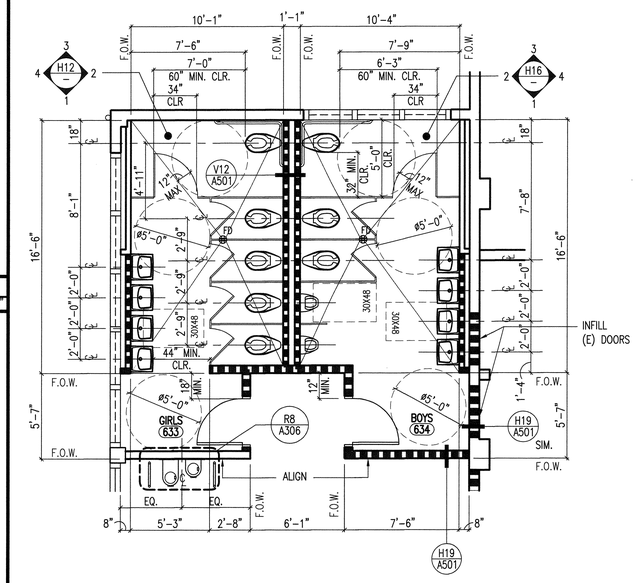

ENLARGED PLAN — A16

BUILDING Q: GIRLS & BOYS TOILETS 633 & 634 — 1/4"=1'-0"

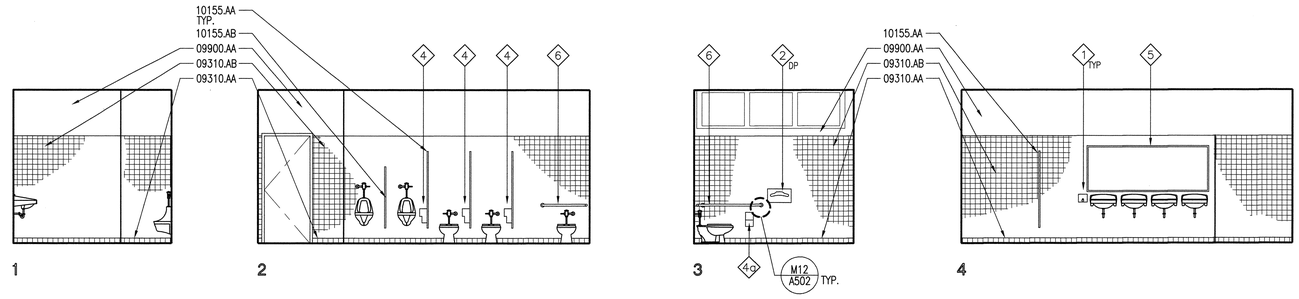

INTERIOR ELEVATIONS — H16

BUILDING Q: BOYS TOILET 634 — 1/4"=1'-0"

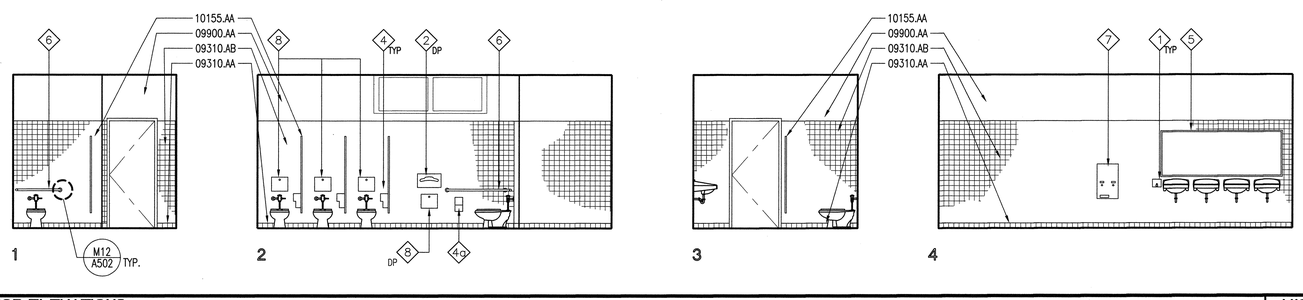

INTERIOR ELEVATIONS — H19

BUILDING O: GIRLS TOILET 632 — 1/4"=1'-0"

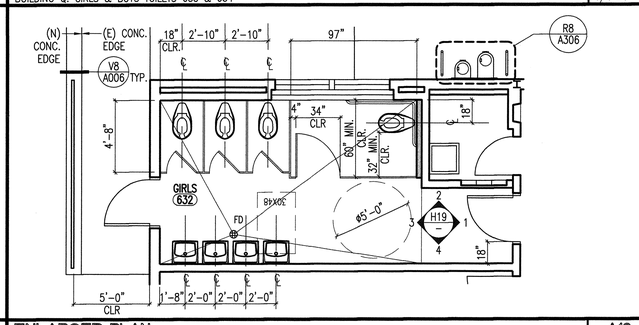

ENLARGED PLAN — A19

BUILDING O: GIRLS TOILET 632 — 1/4"=1'-0"

KEYNOTES

KEYNOTES REFERENCE SPECIFICATION SECTIONS BY MEANS OF A FIVE-DIGIT NUMBER IDENTIFYING THE SECTION WHERE A MORE COMPLETE DESCRIPTION OF THE ITEM INDICATED WILL BE FOUND. THE LETTER SUFFIX OF THE KEYNOTE DOES NOT RELATE TO ANY CORRESPONDING REFERENCE LETTER IN THE SPECIFICATION. KEYNOTES DO NOT DESCRIBE CONSTRUCTION MEANS, METHODS, TECHNIQUES, SEQUENCES, OR PROCEDURES. NO TRADE JURISDICTIONAL ALLOCATION OF THIS WORK IS INTENDED BY THE SUBDIVISION OF THESE KEYNOTES. IT SHALL BE THE CONTRACTOR'S SOLE RESPONSIBILITY TO SUBDIVIDE THE WORK IN THE MANNER HE DEEMS NECESSARY.

DIVISION 9 - FINISHES

09310.AA CERAMIC TILE BASE
09310.AB CERAMIC TILE WAINSCOT
09900.AA PAINT FINISH

DIVISION 10 - SPECIALTIES

10155.AA TOILET PARTITION
10155.AB 14" URINAL PARTITION

WALL LEGEND

EXISTING WALL TO REMAIN

NEW NON RATED WOOD STUD WALL
EXT.: 2X6 @ 16" O.C. INFILL WALL W/ EXTERIOR: PLASTER TO MATCH EXISTING
INTERIOR: SEE FINISH SCHEDULE
INT.: 2X6 @ 16" O.C. INFILL WALL W/ FINISH PER FINISH SCHEDULE
REFER TO SHEET A501 FOR ADDITIONAL INFORMATION

NEW 1-HR RATED WOOD STUD WALL
REFER TO SHEET A501 FOR ADDITIONAL INFORMATION

RESTROOM NOTES

1. FOR TYPICAL SYMBOLS AND ABBREVIATIONS, SEE SHEET G002.
2. REFER TO DETAILS A19/A301 FOR STANDARD MOUNTING HEIGHTS/DIMENSIONS
3. WATER CLOSET FLUSH CONTROLS SHALL BE MOUNTED TO THE WIDE SIDE OF ACCESSIBLE STALLS. COORDINATE LOCATION TO AVOID CONFLICT WITH GRAB BAR.
4. INSULATE HOT WATER & DRAIN PIPES. THERE SHALL BE NO SHARP OR ABRASIVE OBJECTS OR SURFACES UNDER LAVATORIES.
5. DIVISION 15 & 16 KEYNOTES ARE NUMBERED IN GENERAL TERMS ONLY, AND DO NOT NECESSARILY SPECIFICALLY REFER TO THE SECTION NUMBERS WITHIN THE SPECIFICATION. REFER TO MECHANICAL, PLUMBING & ELECTRICAL DRAWINGS AND SPECIFICATIONS FOR SPECIFIC INFORMATION.

TOILET ACCESSORIES

1. SOAP DISPENSER
2. TOILET SEAT COVER DISPENSER
3. PAPER TOWEL DISPENSER
4. TOILET PAPER DISPENSER
4a. D.P. RECESSED TOILET PAPER DISPENSER (MAX. 3" PROTRUSION FROM WALL, NON-CONTROLLED DELIVERY)
5. MIRROR / SHELF COMBINATION
6. GRAB BAR , SEE DETAIL M8/A510
7. SANITARY NAPKIN VENDOR
8. SANITARY NAPKIN DISPOSAL (RECESSED)
9. FOLDING SHOWER SEAT

KEY PLAN

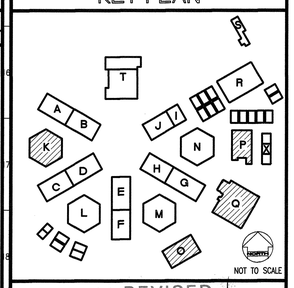

REVISED
IDENTIFICATION STAMP
DIV. OF THE STATE ARCHITECT
OFFICE OF REGULATION SERVICES
FILE NO. 19-H51
APPL. NO. 03-106434
AC. ___ FLS. ___ SS. ___
DATE ___
MAY 12 2004

Dougherty + Dougherty
Architecture • Planning • Interior Design
3194-D Airport Loop Drive
Costa Mesa, CA 92626
(714) 427-0277

Copyright © 2002 Dougherty + Dougherty

Consultant Seal

Architect Seal

LA MIRADA HIGH SCHOOL
MODERNIZATION
NORWALK - LA MIRADA UNIFIED SCHOOL DISTRICT
13520 ADELFA DRIVE LA MIRADA, CA 90638

ENLARGED PLANS AND INTERIOR ELEVATIONS

Date:	04-01-04
Job:	20237.50
Scale:	AS NOTED
Drawn:	
Revisions:	
1	12-01-03

A304

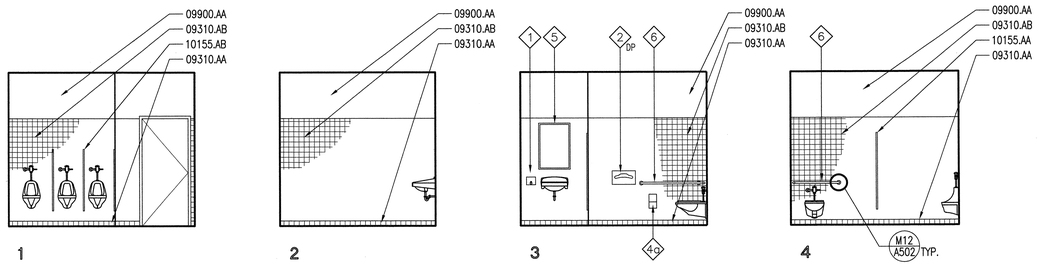

INTERIOR ELEVATIONS — H4

BUILDING T: BOYS TOILETS 533 — 1/4"=1'-0"

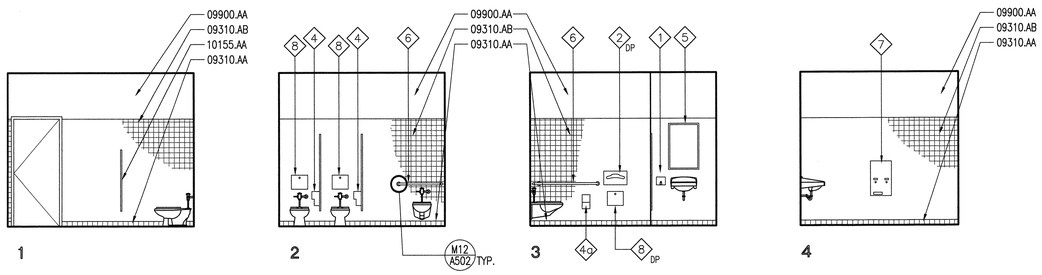

INTERIOR ELEVATIONS — H8

BUILDING T: GIRLS TOILETS 534 — 1/4"=1'-0"

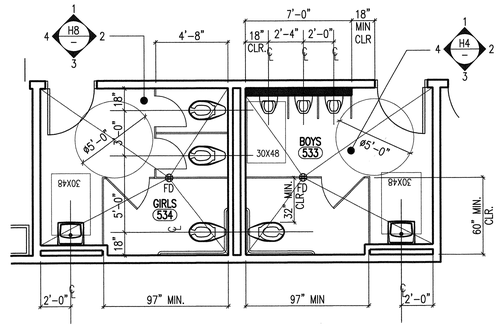

ENLARGED PLAN — A8

BUILDING T: BOYS TOILET 533 & GIRLS TOILET 534 — 1/4"=1'-0"

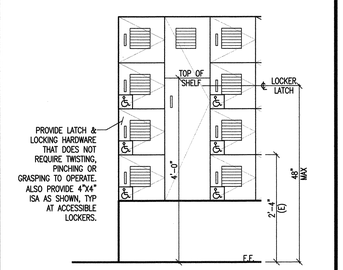

ACCESSIBLE LOCKER DETAIL — R12

BUILDING O: GIRL'S LOCKER ROOM 625 — 3/4"=1'-0"

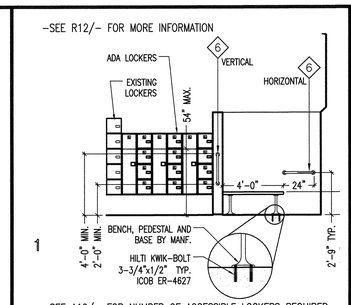

ACCESSIBLE BENCH ELEVATION — M12

BUILDING O: GIRLS LOCKER ROOM 625 — 1/4"=1'-0"

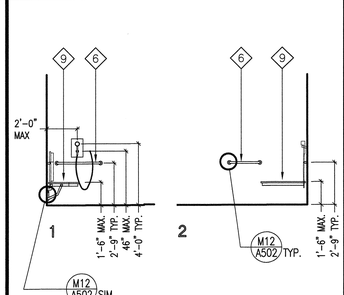

ACCESSIBLE SHOWER ELEVATION — H12

TYPICAL — 1/4"=1'-0"

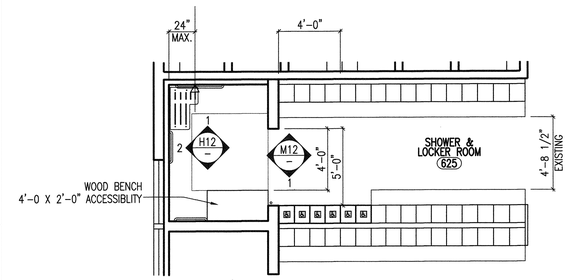

ENLARGED PLAN — A12

BUILDING O: GIRLS SHOWER & LOCKER ROOM 625 — 1/4"=1'-0"

V12

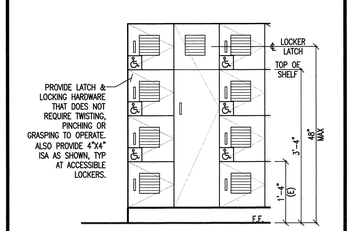

ACCESSIBLE LOCKER DETAIL — R16

BUILDING P: BOY'S LOCKER ROOM 609 — 3/4"=1'-0"

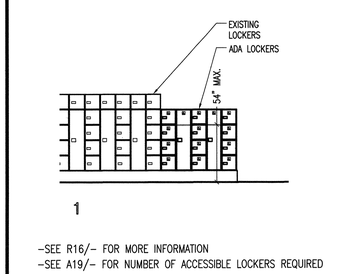

ACCESSIBLE LOCKER ELEVATION — M16

BUILDING P: BOYS LOCKER ROOM 609 & SHOWER 614 — 1/4"=1'-0"

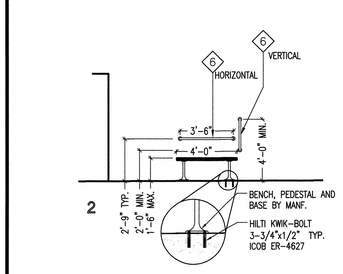

ACCESSIBLE BENCH ELEVATION — H16

BUILDING P: BOYS LOCKER ROOM 609 & SHOWER 614 — 1/4"=1'-0"

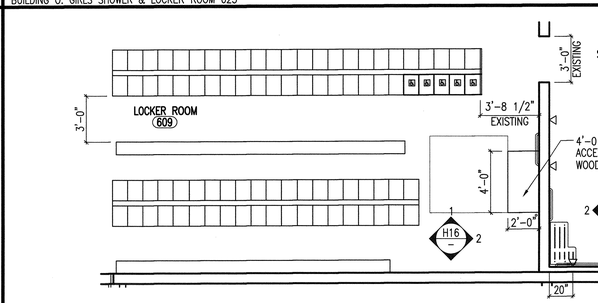

ENLARGED PLAN — A16

BUILDING P: BOYS LOCKER ROOM 609 & SHOWER 614 — 1/4"=1'-0"

V19 — R19 — M19 — H19 — D19

ACCESSIBLE LOCKERS ANALYSIS:

EXISTING LOCKERS:
GIRL LOCKERS – BUILDING O
1056 12" X 12" X 15" BOX LOCKERS
176 12" X 48" X 15" STREET LOCKERS

BOY LOCKERS – BUILDING P
864 12" X 12" X 15" BOX LOCKERS
192 12" X 48" X 15" STREET LOCKERS

PER CBC SECTION 1115B.6.4, AT LEAST 1% OF ALL LOCKERS SHALL BE MADE ACCESSIBLE.

ACCESSIBLE LOCKERS PROVIDED:
GIRL LOCKERS – BUILDING O
12 12" X 12" X 15" BOX LOCKERS
3 12" X 48" X 15" STREET LOCKERS

BOY LOCKERS – BUILDING P
12 12" X 12" X 15" BOX LOCKERS
2 12" X 48" X 15" STREET LOCKERS

ACCESSIBLE LOCKER ANALYSIS — A19

KEYNOTES

KEYNOTES REFERENCE SPECIFICATION SECTIONS BY MEANS OF A FIVE-DIGIT NUMBER IDENTIFYING THE SECTION WHERE A MORE COMPLETE DESCRIPTION OF THE ITEM INDICATED WILL BE FOUND. THE LETTER SUFFIX OF THE KEYNOTE DOES NOT RELATE TO ANY CORRESPONDING REFERENCE LETTER IN THE SPECIFICATION. KEYNOTES DO NOT DESCRIBE CONSTRUCTION MEANS, METHODS, TECHNIQUES, SEQUENCES, OR PROCEDURES. NO TRADE JURISDICTIONAL ALLOCATION OF THIS WORK IS INTENDED BY THE SUBDIVISION OF THESE KEYNOTES. IT SHALL BE THE CONTRACTOR'S SOLE RESPONSIBILITY TO SUBDIVIDE THE WORK IN THE MANNER HE DEEMS NECESSARY.

DIVISION 9 – FINISHES

09310.AA CERAMIC TILE BASE
09310.AB CERAMIC TILE WAINSCOT
09900.AA PAINT FINISH

DIVISION 10 – SPECIALTIES

10155.AA TOILET PARTITION
10155.AB 14" URINAL PARTITION

WALL LEGEND

EXISTING WALL TO REMAIN

NEW NON RATED WOOD STUD WALL
EXT.: 2X6 @ 16" O.C. INFILL WALL W/
EXTERIOR: PLASTER TO MATCH EXIST.
INTERIOR: SEE FINISH SCHEDULE
INT.: 2X6 @ 16" O.C. INFILL WALL
FINISH PER FINISH SCHEDULE
REFER TO SHEET A501 FOR ADDITIONAL INFORMATION

NEW 1-HR RATED WOOD STUD WALL
REFER TO SHEET A501 FOR ADDITIONAL INFORMATION

RESTROOM NOTES

1. FOR TYPICAL SYMBOLS AND ABBREVIATIONS, SEE SHEET G002.
2. REFER TO DETAILS A19/A301 FOR STANDARD MOUNTING HEIGHTS/DIMENSIONS
3. WATER CLOSET FLUSH CONTROLS SHALL BE MOUNTED TO THE WIDE SIDE OF ACCESSIBLE STALLS. COORDINATE LOCATION TO AVOID CONFLICT WITH GRAB BAR.
4. INSULATE HOT WATER & DRAIN PIPES. THERE SHALL BE NO SHARP OR ABRASIVE OBJECTS OR SURFACES UNDER LAVATORIES.
5. DIVISION 15 & 16 KEYNOTES ARE NUMBERED IN GENERAL TERMS ONLY, AND DO NOT NECESSARILY SPECIFICALLY REFER TO THE SECTION NUMBERS WITHIN THE SPECIFICATION. REFER TO MECHANICAL, PLUMBING & ELECTRICAL DRAWINGS AND SPECIFICATIONS FOR SPECIFIC INFORMATION.

TOILET ACCESSORIES

1. SOAP DISPENSER
2. TOILET SEAT COVER DISPENSER
3. PAPER TOWEL DISPENSER
4. TOILET PAPER DISPENSER
4a. D.P. RECESSED TOILET PAPER DISPENSER (MAX. 3" PROTRUSION FROM WALL, NON-CONTROLLED DELIVERY)
5. MIRROR / SHELF COMBINATION
6. GRAB BAR , SEE DETAIL M8/A510
7. SANITARY NAPKIN VENDOR
8. SANITARY NAPKIN DISPOSAL (RECESSED)
9. FOLDING SHOWER SEAT

KEY PLAN

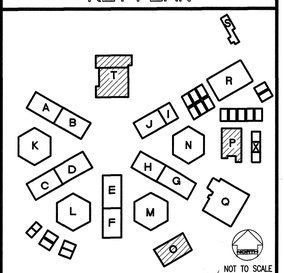

REVISED
IDENTIFICATION STAMP
DIV. OF THE STATE ARCHITECT
OFFICE OF REGULATION SERVICES
FILE NO. 19-H51
APPL. NO. 03-106434
AC. FLS. NL SS
DATE MAY 12 2004

Dougherty + Dougherty
Architecture • Planning • Interior Design
3194-D Airport Loop Drive
Costa Mesa, CA 92626
(714) 427-0277

Copyright © 2002 Dougherty + Dougherty

Consultant Seal

Architect Seal

LA MIRADA HIGH SCHOOL
MODERNIZATION
NORWALK - LA MIRADA UNIFIED SCHOOL DISTRICT
13520 ADELFA DRIVE LA MIRADA, CA 90638

ENLARGED PLANS AND INTERIOR ELEVATIONS

Date:	04-01-04
Job:	20237.50
Scale:	AS NOTED
Drawn:	
Revisions:	
1	12-01-03

A305

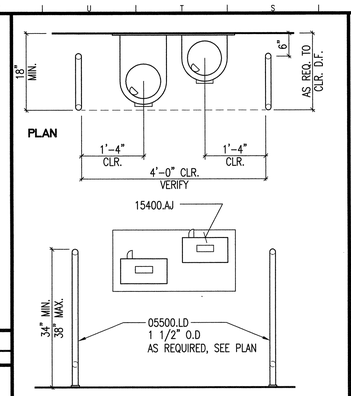

V4 | V8 | DRINKING FOUNTAIN | R8 | 3/4" = 1'-0"

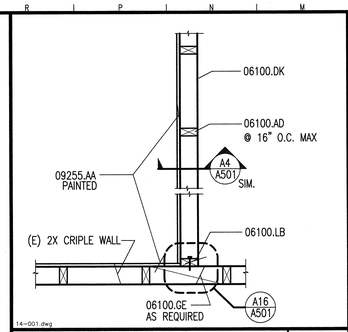

PLAN VIEW • WHEELCHAIR LIFT | M4 | 1"=1'-0"

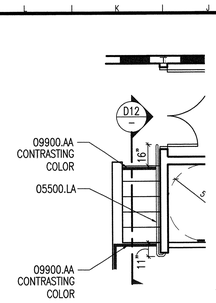

ENLARGED PLAN | H4 | BUILDING T: STAGE 522 NORTH STAIR | 1/4"=1'-0"

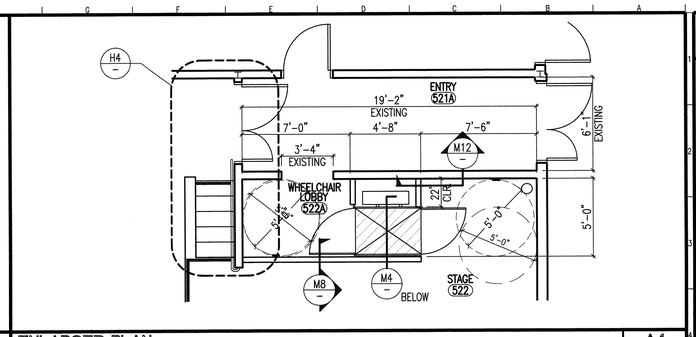

ENLARGED PLAN | A4 | BUILDING T: ENTRY 521A & STAGE 522 | 1/4"=1'-0"

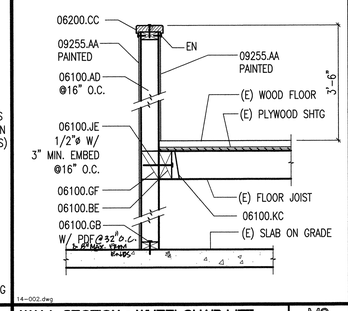

WALL SECTION • WHEELCHAIR LIFT | M8 | PARALLEL TO (E) JOIST | 1"=1'-0"

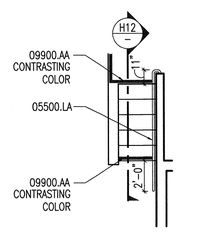

ENLARGED PLAN | H8 | BUILDING T: STAGE 522 SOUTH STAIR | 1/4"=1'-0"

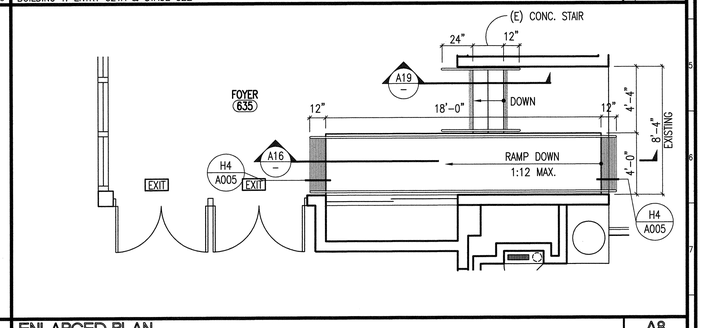

ENLARGED PLAN | A8 | BUILDING Q: ENTRY FOYER 635 | 1/4"=1'-0"

V12 | R12 | WALL SECTION • WHEELCHAIR LIFT | M12 | PERPENDICULAR TO (E) JOIST | 1"=1'-0"

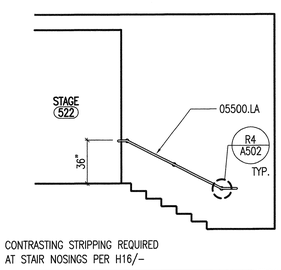

STAIR HANDRAIL ELEVATION | H12 | BUILDING T: STAGE 522 SOUTH STAIR | 1/4"=1'-0"

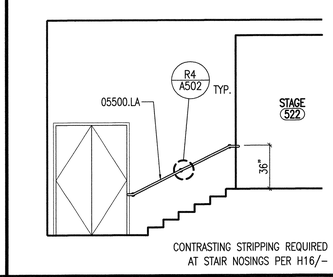

STAIR HANDRAIL ELEVATION | D12 | BUILDING T: STAGE 522 NORTH STAIR | 1/4"=1'-0"

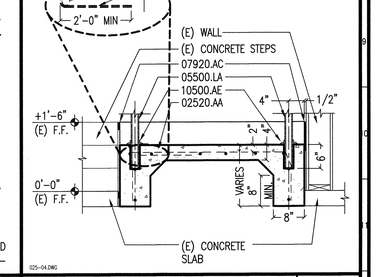

RAMP SECTION | A12 | 3/4"=1'-0"

V16 | R16 | M16

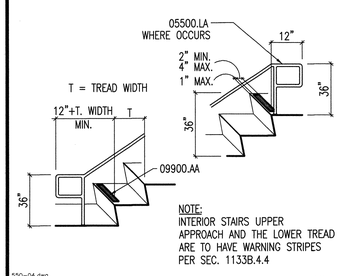

WARNING STRIPING & HANDRAIL | H16 | INTERIOR STAIR | N.T.S.

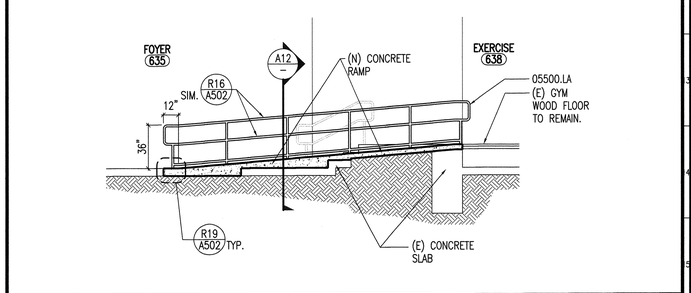

CONCRETE RAMP HANDRAIL ELEVATION | A16 | 1/4"=1'-0"

V19 | R19 | M19

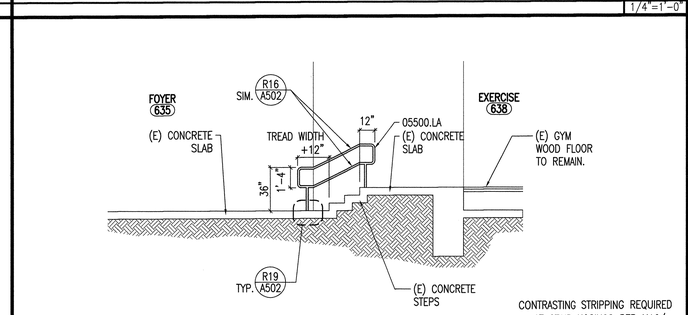

CONCRETE STAIR HANDRAIL ELEVATION | A19 | 1/4"=1'-0"

KEYNOTES

KEYNOTES REFERENCE SPECIFICATION SECTIONS BY MEANS OF A FIVE-DIGIT NUMBER IDENTIFYING THE SECTION WHERE A MORE COMPLETE DESCRIPTION OF THE ITEM INDICATED WILL BE FOUND. THE LETTER SUFFIX OF THE KEYNOTE DOES NOT RELATE TO ANY CORRESPONDING REFERENCE LETTER IN THE SPECIFICATION. KEYNOTES DO NOT DESCRIBE CONSTRUCTION MEANS, METHODS, TECHNIQUES, SEQUENCES, OR PROCEDURES. NO TRADE JURISDICTIONAL ALLOCATION OF THIS WORK IS INTENDED BY THE SUBDIVISION OF THESE KEYNOTES. IT SHALL BE THE CONTRACTOR'S SOLE RESPONSIBILITY TO SUBDIVIDE THE WORK IN THE MANNER HE DEEMS NECESSARY.

DIVISION 2 – SITEWORK

02520.AA CONCRETE PAVING – 4" THICK WITH #3 BARS @ 24" O.C. EACH WAY, NON-SLIP BROOM FINISH

DIVISION 5 – METALS

05500.LA PIPE HANDRAIL
05500.LB PIPE SLEEVE W/ PLUG
05500.LD PIPE GUARDRAIL

DIVISION 6 – WOOD & PLASTICS

06100.AD 2X4 WOOD STUD
06100.BE 3X CONT. LEDGER
06100.DK 2X SILL PLATE
06100.GB SILL PLATE
06100.GE 2X BLOCKING
06100.GF 4X BLOCKING
06100.HA PLYWOOD SHEATHING
06100.JE LAG SCREW
06100.KC HU HANGER
06100.LB 16D COMMON NAIL
06200.CC WOOD CAP

DIVISION 7 – THERMAL & MOISTURE PROTECTION

07920.AC SELF LEVELING SEALANT

DIVISION 9 – FINISHES

09255.AA 5/8" TYPE "X" GYPSUM BOARD
09900.AA PAINT FINISH

DIVISION 10 – SPECIALTIES

10500.AE ESCUTCHEON

DIVISION 15 – MECHANICAL

15400.AJ ACCESSIBLE HI-LO DRINKING FOUNTAIN – SEE PLUMBING

KEY PLAN

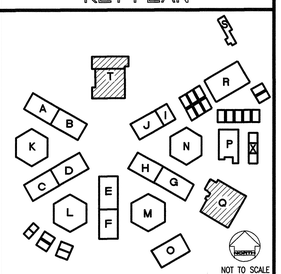

REVISED
IDENTIFICATION STAMP
DIV. OF THE STATE ARCHITECT
OFFICE OF REGULATION SERVICES
FILE NO. 19-H51
APPL. NO. 03-106434
AC. FLS. SS.
DATE
MAY 1 2 2004

Dougherty + Dougherty
Architecture • Planning • Interior Design
3194-D Airport Loop Drive
Costa Mesa, CA 92626
(714) 427-0277

Copyright © 2002 Dougherty + Dougherty

REGISTERED PROFESSIONAL ENGINEER
STEPHEN J. DOUGHERTY
No. C-8824
EXP. 12/31/04
STATE OF CALIFORNIA
Architect Seal

Consultant Seal

LA MIRADA HIGH SCHOOL
MODERNIZATION
NORWALK - LA MIRADA UNIFIED SCHOOL DISTRICT
13520 ADELFA DRIVE LA MIRADA, CA 90638

ACCESSIBILITY
ENLARGED PLANS
AND DETAILS

Date:	04-01-04
Job:	20237.50
Scale:	AS NOTED
Drawn:	
Revisions:	
1	12-01-03

A306

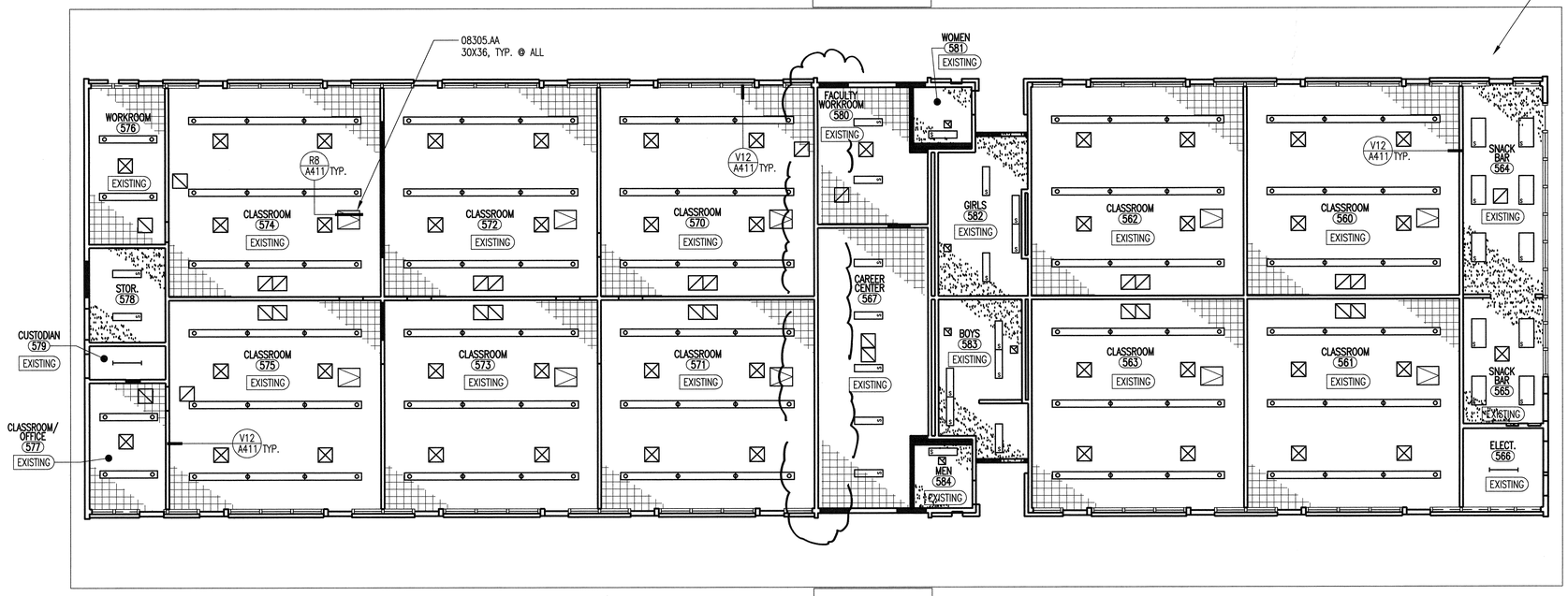

BUILDING A-B REFLECTED CEILING PLAN — A10

550 BUILDING — 1/8"=1'-0"

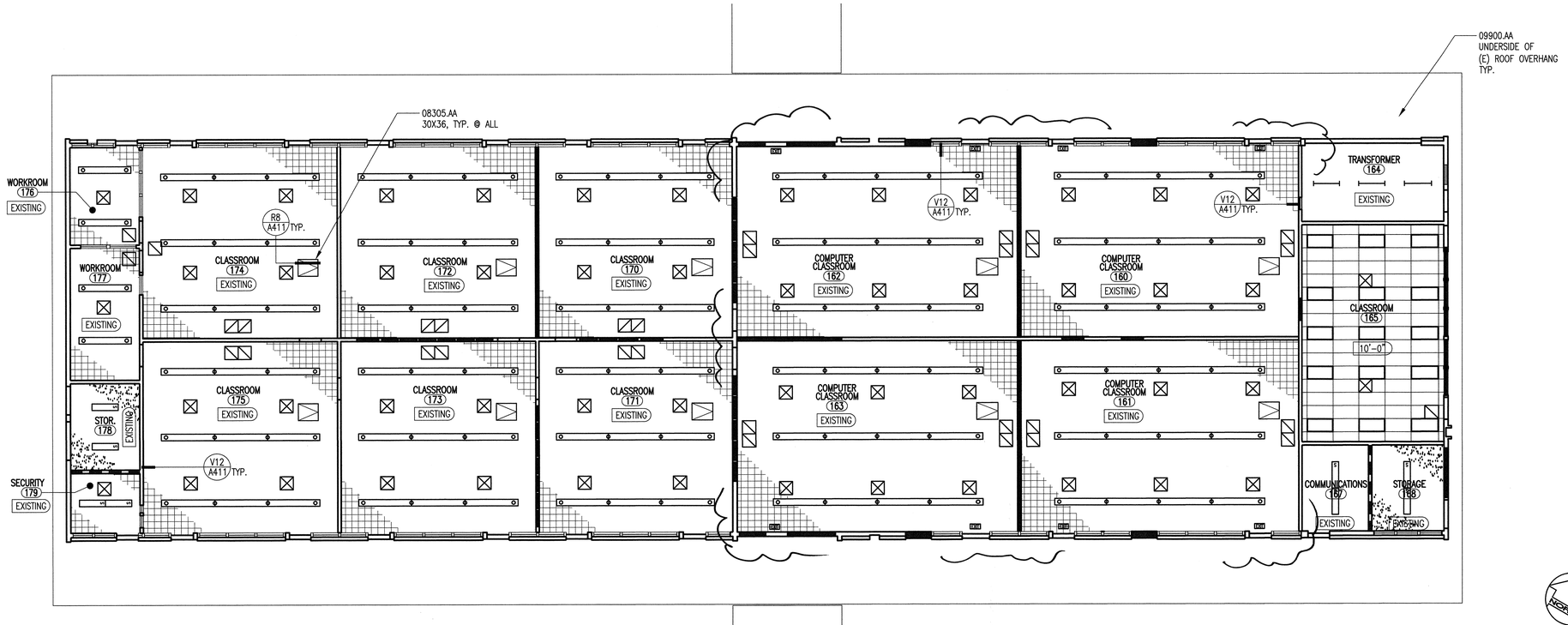

BUILDING C-D REFLECTED CEILING PLAN — A19

150 BUILDING — 1/8"=1'-0"

KEYNOTES

KEYNOTES REFERENCE SPECIFICATION SECTIONS BY MEANS OF A FIVE-DIGIT NUMBER IDENTIFYING THE SECTION WHERE A MORE COMPLETE DESCRIPTION OF THE ITEM INDICATED WILL BE FOUND. THE LETTER SUFFIX OF THE KEYNOTE DOES NOT RELATE TO ANY CORRESPONDING REFERENCE LETTER IN THE SPECIFICATION. KEYNOTES DO NOT DESCRIBE CONSTRUCTION MEANS, METHODS, TECHNIQUES, SEQUENCES, OR PROCEDURES. NO TRADE JURISDICTIONAL ALLOCATION OF THIS WORK IS INTENDED BY THE SUBDIVISION OF THESE KEYNOTES. IT SHALL BE THE CONTRACTOR'S SOLE RESPONSIBILITY TO SUBDIVIDE THE WORK IN THE MANNER HE DEEMS NECESSARY.

DIVISION 8 – DOORS & WINDOWS

08305.AA ACCESS PANEL

DIVISION 9 – FINISHES

09900.AA PAINT FINISH

CEILING GENERAL NOTES

1) FOR TYPICAL SYMBOLS AND ABBREVIATIONS, SEE G002.
2) FOR TYPICAL CEILING DETAILS, SEE A411.
3) ALL ITEMS SHOWN OR NOTED ARE NEW, UNLESS INDICATED AS EXISTING.
4) HEIGHTS INDICATED ARE TO THE UNDERSIDE OF THE FINISH CEILING OR SOFFIT FROM THE FINISH FLOOR. IF NO CEILING HEIGHT IS GIVEN CEILING HEIGHT IS TO MATCH EXISTING.
5) PROVIDE CEILING ACCESS PANELS AT HARD CEILINGS WHERE REQUIRED TO ACCESS PLUMBING AND MECHANICAL CONTROLS.
6) LIGHT FIXTURES AND MECHANICAL REGISTERS ARE SHOWN FOR LOCATION ONLY. FOR ACTUAL TYPES AND SIZES, SEE ELECTRICAL AND MECHANICAL PLANS
7) FOR EXIT SIGN LOCATIONS AS OCCUR, SEE ELECTRICAL PLANS.
8) THERMAL INSULATION: PROVIDE R19 THERMAL BATT INSULATION BETWEEN ROOF JOISTS, TYPICAL.
9) WHERE CEILINGS ARE (E) TO REMAIN, PATCH AND REPAIR CRACKED OR DAMAGED SURFACES PRIOR TO PAINTING.
10) CONTRACTOR TO REMOVE AND REPLACE (E) CEILING JOISTS/ (E) STRIPPING TO OBTAIN ACCESS TO ABOVE CEILING WORKS.
11) CONTRACTOR TO MODIFY (E) CEILING STRIPPINGS TO INSTALL CEILING DIFFUSERS AND ACCESS PANELS.

CEILING LEGEND

- SUSPENDED ACOUSTICAL TILE CEILING
- 12 X 12 ACOUSTICAL CEILING TILES O/ (N) 5/8" GYP.BD. REFER TO DETAIL R4/A411 OR O/ (E) STRIPPING REFER TO DETAIL V12/A411
- NEW GYP. BOARD SOFFIT OR CEILING
- EXISTING CEILING/SOFFIT W/ PLASTER OR GYP. BD – REPAINT
- EXHAUST FAN GRILL
- SUPPLY AIR DIFFUSER
- RETURN AIR DIFFUSER
- 2x4 RECESSED FLUORESCENT LIGHT FIXTURE
- 2x4 SURFACE MOUNTED FLUORESCENT LIGHT FIXTURE
- 1x4 SURFACE MOUNTED FLUORESCENT LIGHT FIXTURE
- SURFACE MOUNTED FLUORESCENT STRIP FIXTURE
- PENDANT-MOUNT FLUORESCENT LIGHT FIXTURE
- RECESSED LINEAR LIGHT FIXTURE
- EXIT ILLUMINATION LIGHT FIXTURE
- RECESSED CFL DOWNLIGHT
- (E) PENDENT-MOUNT H.I.D. FIXTURE TO REMAIN
- +8'-0" CEILING HEIGHT A.F.F.
- EXPOSED EXPOSED STRUCTURE, PAINT.

KEY PLAN

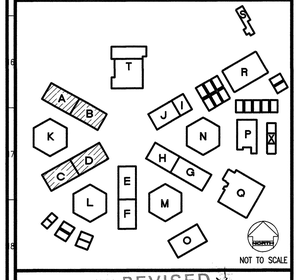

REVISED MAY 12 2004

IDENTIFICATION STAMP
DIV. OF THE STATE ARCHITECT
OFFICE OF REGULATION SERVICES
FILE NO. 19-H51
APPL. NO. 03-106434
ACCESS ___ FLS ___ SS ___
DATE ___

Dougherty + Dougherty
Architecture • Planning • Interior Design
3194-D Airport Loop Drive
Costa Mesa, CA 92626
(714) 427-0277

Copyright © 2002 Dougherty + Dougherty

Consultant Seal

Architect Seal

LA MIRADA HIGH SCHOOL
MODERNIZATION
NORWALK - LA MIRADA UNIFIED SCHOOL DISTRICT
13520 ADELFA DRIVE LA MIRADA, CA 90638

CLASSROOM BUILDINGS A-B & C-D CEILING PLANS

Date:	04-01-04
Job:	20237.50
Scale:	AS NOTED
Drawn:	
Revisions:	

A401

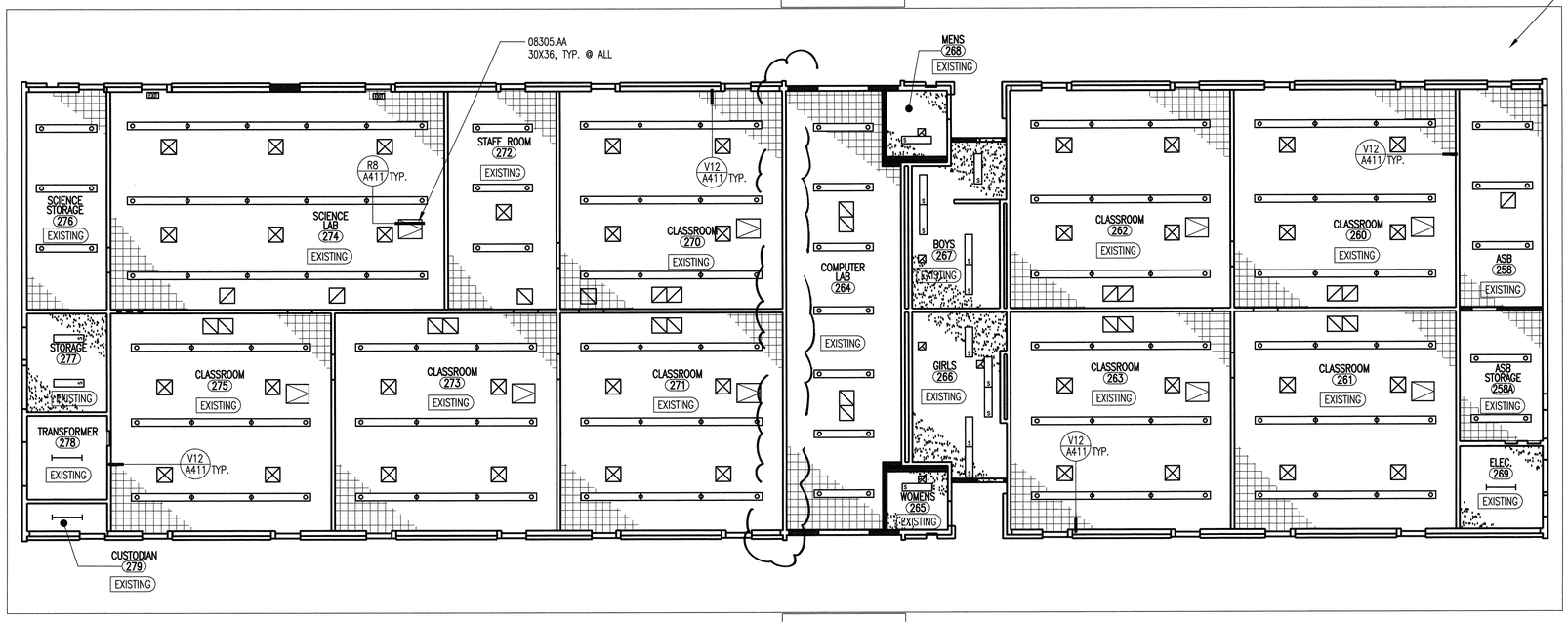

BUILDING E-F REFLECTED CEILING PLAN
250 BUILDING

A10
1/8"=1'-0"

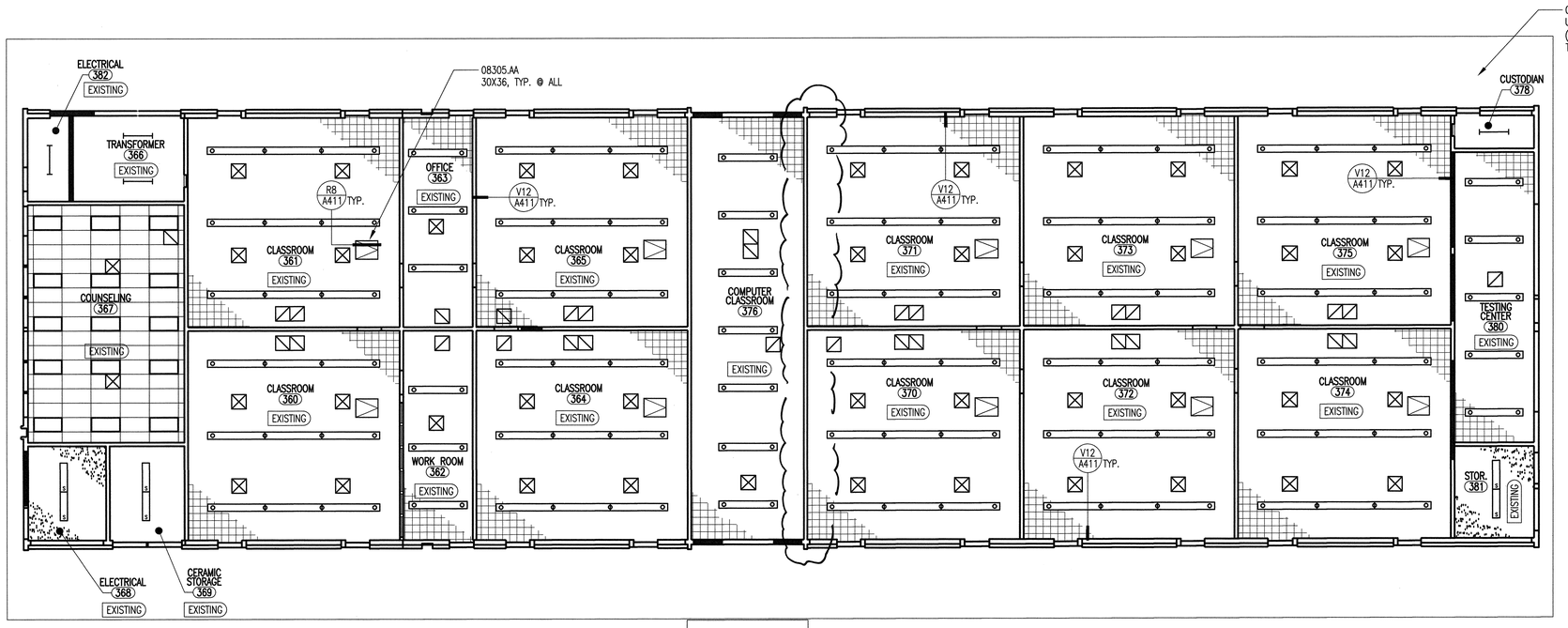

BUILDING G-H REFLECTED CEILING PLAN
350 BUILDING

A19
1/8"=1'-0"

KEYNOTES

KEYNOTES REFERENCE SPECIFICATION SECTIONS BY MEANS OF A FIVE-DIGIT NUMBER IDENTIFYING THE SECTION WHERE A MORE COMPLETE DESCRIPTION OF THE ITEM INDICATED WILL BE FOUND. THE LETTER SUFFIX OF THE KEYNOTE DOES NOT RELATE TO ANY CORRESPONDING REFERENCE LETTER IN THE SPECIFICATION. KEYNOTES DO NOT DESCRIBE CONSTRUCTION MEANS, METHODS, TECHNIQUES, SEQUENCES, OR PROCEDURES. NO TRADE JURISDICTIONAL ALLOCATION OF THIS WORK IS INTENDED BY THE SUBDIVISION OF THESE KEYNOTES. IT SHALL BE THE CONTRACTOR'S SOLE RESPONSIBILITY TO SUBDIVIDE THE WORK IN THE MANNER HE DEEMS NECESSARY.

DIVISION 8 – DOORS & WINDOWS

08305.AA ACCESS PANEL

DIVISION 9 – FINISHES

09900.AA PAINT FINISH

CEILING GENERAL NOTES

1) FOR TYPICAL SYMBOLS AND ABBREVIATIONS, SEE G002.
2) FOR TYPICAL CEILING DETAILS, SEE A411.
3) ALL ITEMS SHOWN OR NOTED ARE NEW, UNLESS INDICATED AS EXISTING.
4) HEIGHTS INDICATED ARE TO THE UNDERSIDE OF THE FINISH CEILING OR SOFFIT FROM THE FINISH FLOOR. IF NO CEILING HEIGHT IS GIVEN CEILING HEIGHT IS TO MATCH EXISTING.
5) PROVIDE CEILING ACCESS PANELS AT HARD CEILINGS WHERE REQUIRED TO ACCESS PLUMBING AND MECHANICAL CONTROLS.
6) LIGHT FIXTURES AND MECHANICAL REGISTERS ARE SHOWN FOR LOCATION ONLY. FOR ACTUAL TYPES AND SIZES, SEE ELECTRICAL AND MECHANICAL PLANS
7) FOR EXIT SIGN LOCATIONS AS OCCUR, SEE ELECTRICAL PLANS.
8) THERMAL INSULATION: PROVIDE R19 THERMAL BATT INSULATION BETWEEN ROOF JOISTS, TYPICAL.
9) WHERE CEILINGS ARE (E) TO REMAIN, PATCH AND REPAIR CRACKED OR DAMAGED SURFACES PRIOR TO PAINTING.
10) CONTRACTOR TO REMOVE AND REPLACE (E) CEILING JOISTS/ (E) STRIPPING TO OBTAIN ACCESS TO ABOVE CEILING WORKS.
11) CONTRACTOR TO MODIFY (E) CEILING STRIPPINGS TO INSTALL CEILING DIFFUSERS AND ACCESS PANELS.

CEILING LEGEND

- SUSPENDED ACOUSTICAL TILE CEILING
- 12 X 12 ACOUSTICAL CEILING TILES O/ (N) 5/8" GYP.BD. REFER TO DETAIL R4/A411 OR O/ (E) STRIPPING REFER TO DETAIL V12/A411
- NEW GYP. BOARD SOFFIT OR CEILING
- EXISTING CEILING/SOFFIT W/ PLASTER OR GYP. BD – REPAINT
- EXHAUST FAN GRILL
- SUPPLY AIR DIFFUSER
- RETURN AIR DIFFUSER
- 2x4 RECESSED FLUORESCENT LIGHT FIXTURE
- 2x4 SURFACE MOUNTED FLUORESCENT LIGHT FIXTURE
- 1x4 SURFACE MOUNTED FLUORESCENT LIGHT FIXTURE
- SURFACE MOUNTED FLUORESCENT STRIP FIXTURE
- PENDANT-MOUNT FLUORESCENT LIGHT FIXTURE
- RECESSED LINEAR LIGHT FIXTURE
- EXIT ILLUMINATION LIGHT FIXTURE
- RECESSED CFL DOWNLIGHT
- (E) PENDENT-MOUNT H.I.D. FIXTURE TO REMAIN
- +8'-0" CEILING HEIGHT A.F.F.
- EXPOSED EXPOSED STRUCTURE, PAINT.

KEY PLAN

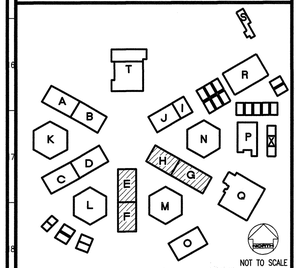

NOT TO SCALE

REVISED
IDENTIFICATION STAMP
DIV. OF THE STATE ARCHITECT
OFFICE OF REGULATION SERVICES
FILE NO. 19-H51
APPL. NO. 03-106434
AC. FLS. SS.
DATE
MAY 12 2004

Dougherty + Dougherty
Architecture · Planning · Interior Design
3194-D Airport Loop Drive
Costa Mesa, CA 92626
(714) 427-0277

Copyright © 2002 Dougherty + Dougherty

Consultant Seal

Architect Seal

LA MIRADA HIGH SCHOOL
MODERNIZATION
NORWALK - LA MIRADA UNIFIED SCHOOL DISTRICT
13520 ADELFA DRIVE LA MIRADA, CA 90638

CLASSROOM
BUILDINGS E-F & G-H
REF. CEILING PLANS

Date:	04-01-04
Job:	20237.50
Scale:	AS NOTED
Drawn:	
Revisions:	

A402

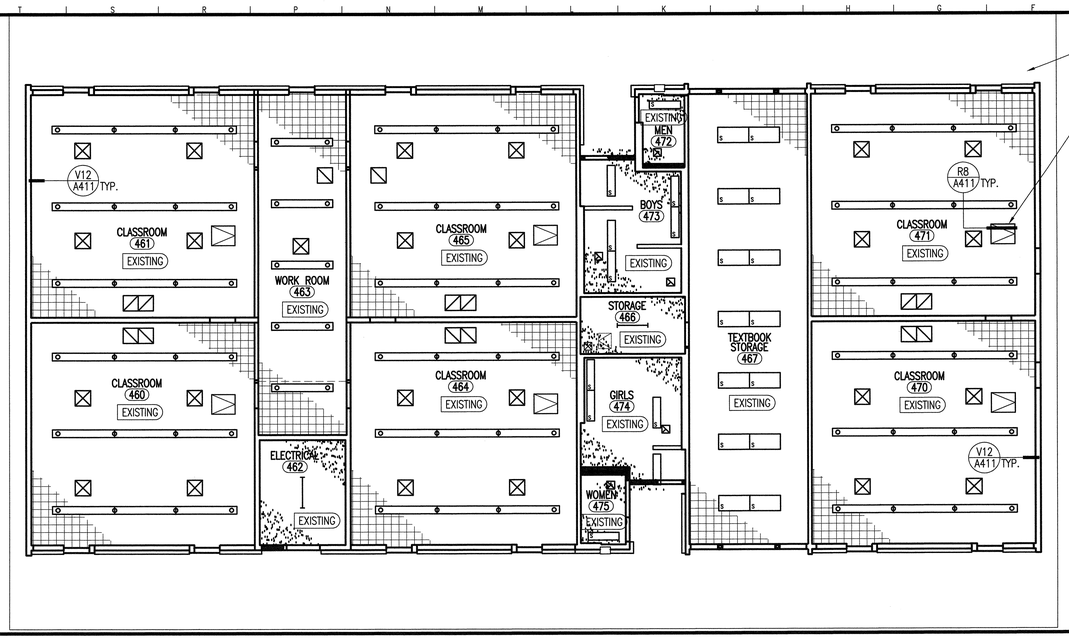

BUILDING I-J REFLECTED CEILING PLAN

150 BUILDING

A10

1/8"=1'-0"

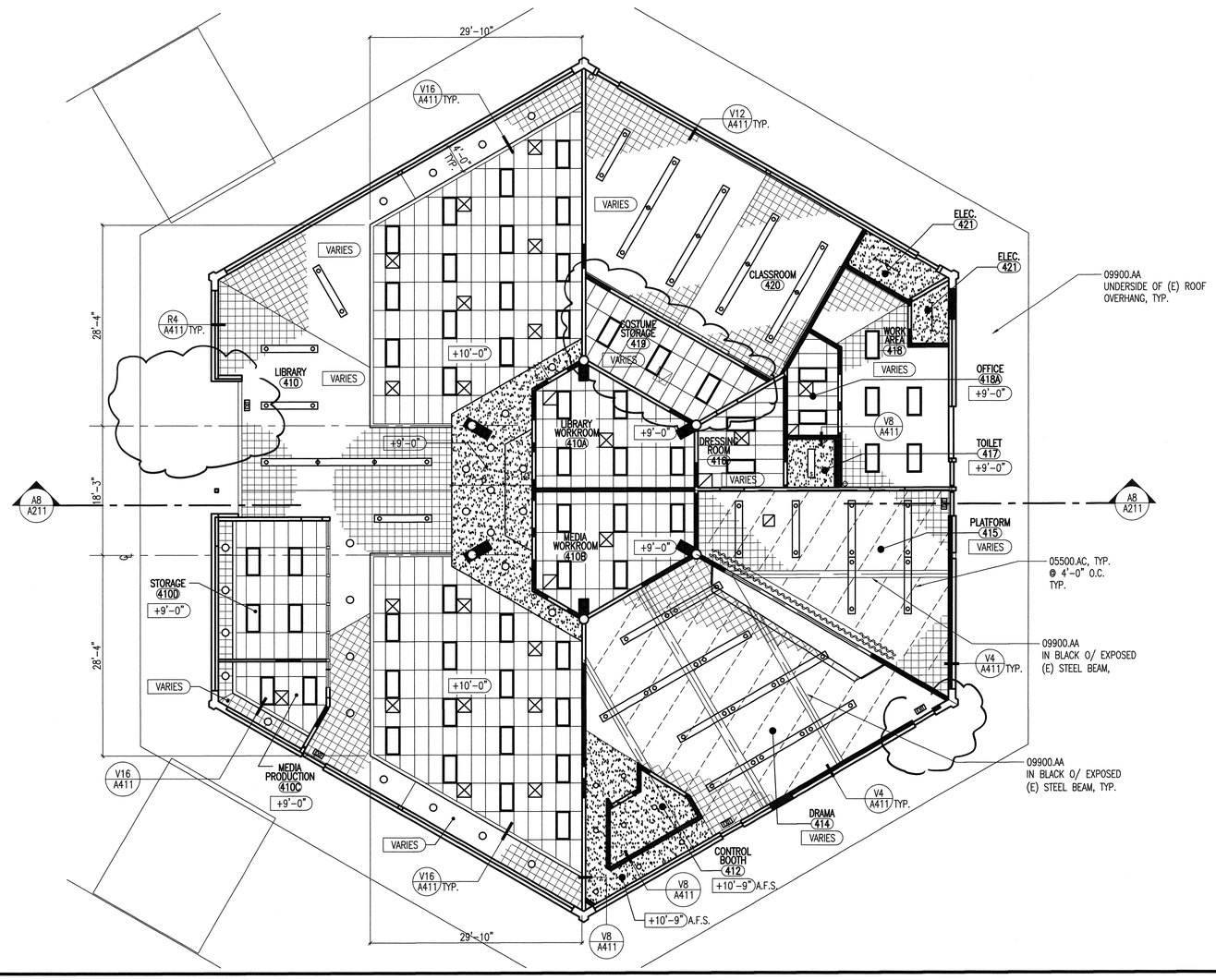

BUILDING N REFLECTED CEILING PLAN

LIBRARY/DRAMA BUILDING

A19

1/8"=1'-0"

KEYNOTES

KEYNOTES REFERENCE SPECIFICATION SECTIONS BY MEANS OF A FIVE-DIGIT NUMBER IDENTIFYING THE SECTION WHERE A MORE COMPLETE DESCRIPTION OF THE ITEM INDICATED WILL BE FOUND. THE LETTER SUFFIX OF THE KEYNOTE DOES NOT RELATE TO ANY CORRESPONDING REFERENCE LETTER IN THE SPECIFICATION. KEYNOTES DO NOT DESCRIBE CONSTRUCTION MEANS, METHODS, TECHNIQUES, SEQUENCES, OR PROCEDURES. NO TRADE JURISDICTIONAL ALLOCATION OF THIS WORK IS INTENDED BY THE SUBDIVISION OF THESE KEYNOTES. IT SHALL BE THE CONTRACTOR'S SOLE RESPONSIBILITY TO SUBDIVIDE THE WORK IN THE MANNER HE DEEMS NECESSARY.

DIVISION 5 – METALS

05500.AC UNISTRUT

DIVISION 8 – DOORS & WINDOWS

08305.AA ACCESS PANEL

DIVISION 9 – FINISHES

09900.AA PAINT FINISH

CEILING GENERAL NOTES

1) FOR TYPICAL SYMBOLS AND ABBREVIATIONS, SEE G002.
2) FOR TYPICAL CEILING DETAILS, SEE A411.
3) ALL ITEMS SHOWN OR NOTED ARE NEW, UNLESS INDICATED AS EXISTING.
4) HEIGHTS INDICATED ARE TO THE UNDERSIDE OF THE FINISH CEILING OR SOFFIT FROM THE FINISH FLOOR. IF NO CEILING HEIGHT IS GIVEN CEILING HEIGHT IS TO MATCH EXISTING.
5) PROVIDE CEILING ACCESS PANELS AT HARD CEILINGS WHERE REQUIRED TO ACCESS PLUMBING AND MECHANICAL CONTROLS.
6) LIGHT FIXTURES AND MECHANICAL REGISTERS ARE SHOWN FOR LOCATION ONLY. FOR ACTUAL TYPES AND SIZES, SEE ELECTRICAL AND MECHANICAL PLANS
7) FOR EXIT SIGN LOCATIONS AS OCCUR, SEE ELECTRICAL PLANS.
8) THERMAL INSULATION: PROVIDE R19 THERMAL BATT INSULATION BETWEEN ROOF JOISTS, TYPICAL.
9) WHERE CEILINGS ARE (E) TO REMAIN, PATCH AND REPAIR CRACKED OR DAMAGED SURFACES PRIOR TO PAINTING.
10) CONTRACTOR TO REMOVE AND REPLACE (E) CEILING JOISTS/ (E) STRIPPING TO OBTAIN ACCESS TO ABOVE CEILING WORKS.
11) CONTRACTOR TO MODIFY (E) CEILING STRIPPINGS TO INSTALL CEILING DIFFUSERS AND ACCESS PANELS.

CEILING LEGEND

- SUSPENDED ACOUSTICAL TILE CEILING
- 12 X 12 ACOUSTICAL CEILING TILES O/ (N) 5/8" GYP.BD. REFER TO DETAIL R4/A411 OR O/ (E) STRIPPING REFER TO DETAIL V12/A411
- NEW GYP. BOARD SOFFIT OR CEILING
- EXISTING CEILING/SOFFIT W/ PLASTER OR GYP. BD – REPAINT
- EXHAUST FAN GRILL
- SUPPLY AIR DIFFUSER
- RETURN AIR DIFFUSER
- 2x4 RECESSED FLUORESCENT LIGHT FIXTURE
- 2x4 SURFACE MOUNTED FLUORESCENT LIGHT FIXTURE
- 1x4 SURFACE MOUNTED FLUORESCENT LIGHT FIXTURE
- SURFACE MOUNTED FLUORESCENT STRIP FIXTURE
- PENDANT-MOUNT FLUORESCENT LIGHT FIXTURE
- RECESSED LINEAR LIGHT FIXTURE
- EXIT ILLUMINATION LIGHT FIXTURE
- RECESSED CFL DOWNLIGHT
- (E) PENDENT-MOUNT H.I.D. FIXTURE TO REMAIN
- +8'-0" CEILING HEIGHT A.F.F.
- EXPOSED EXPOSED STRUCTURE, PAINT.

KEY PLAN

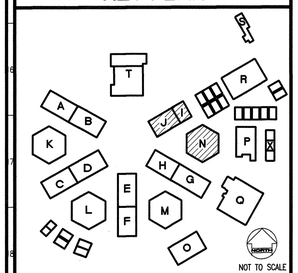

NOT TO SCALE

REVISED

IDENTIFICATION STAMP
DIV. OF THE STATE ARCHITECT
OFFICE OF REGULATION SERVICES
FILE NO. 19-H51
APPL. NO. 03-106434
AC. FLS. SS.
DATE MAY 12 2004

Dougherty + Dougherty
Architecture • Planning • Interior Design
3194-D Airport Loop Drive
Costa Mesa, CA 92626
(714) 427-0277

Copyright © 2002 Dougherty + Dougherty

Consultant Seal

Architect Seal

LA MIRADA HIGH SCHOOL
MODERNIZATION
NORWALK - LA MIRADA UNIFIED SCHOOL DISTRICT
13520 ADELFA DRIVE LA MIRADA, CA 90638

CLASSROOM
BUILDINGS I-J & N
REF. CEILING PLANS

Date:	04-01-04
Job:	20237.50
Scale:	AS NOTED
Drawn:	
Revisions:	

A403

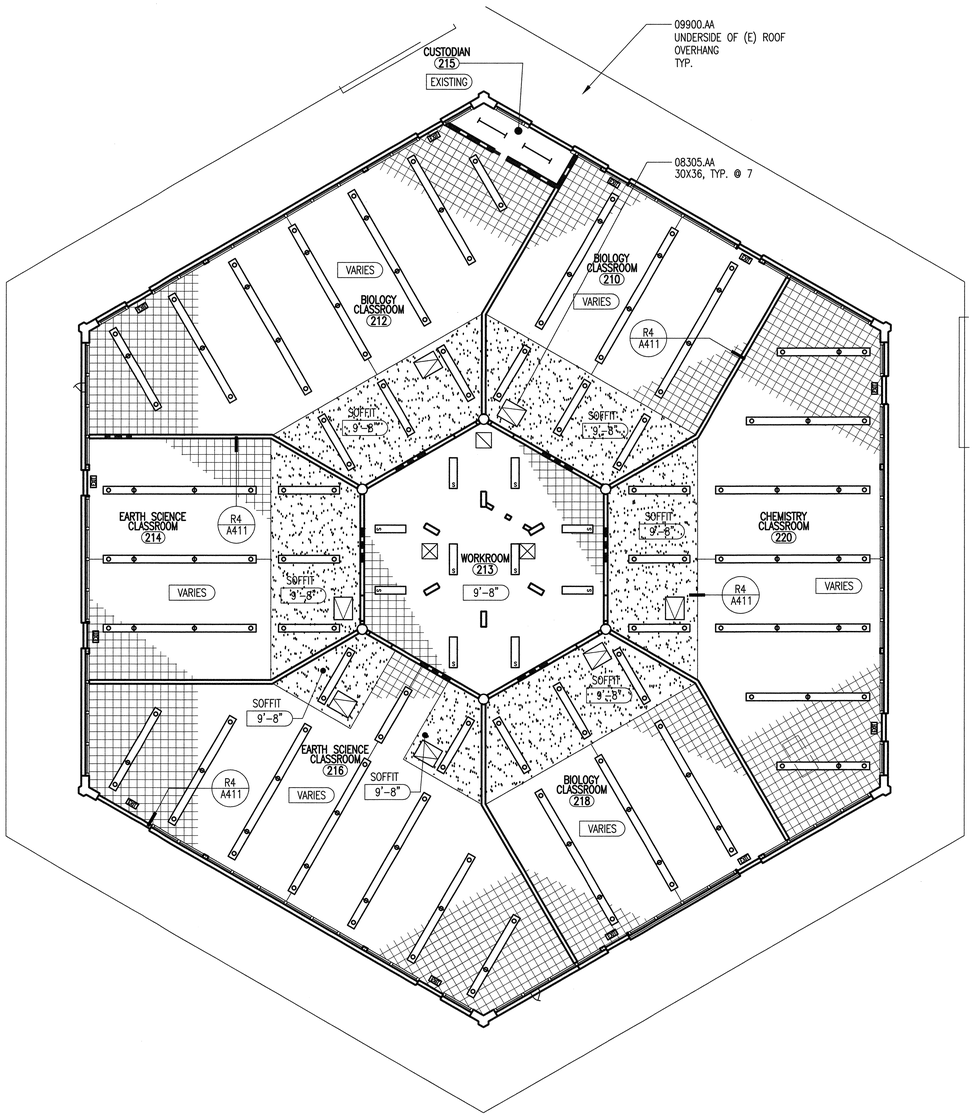

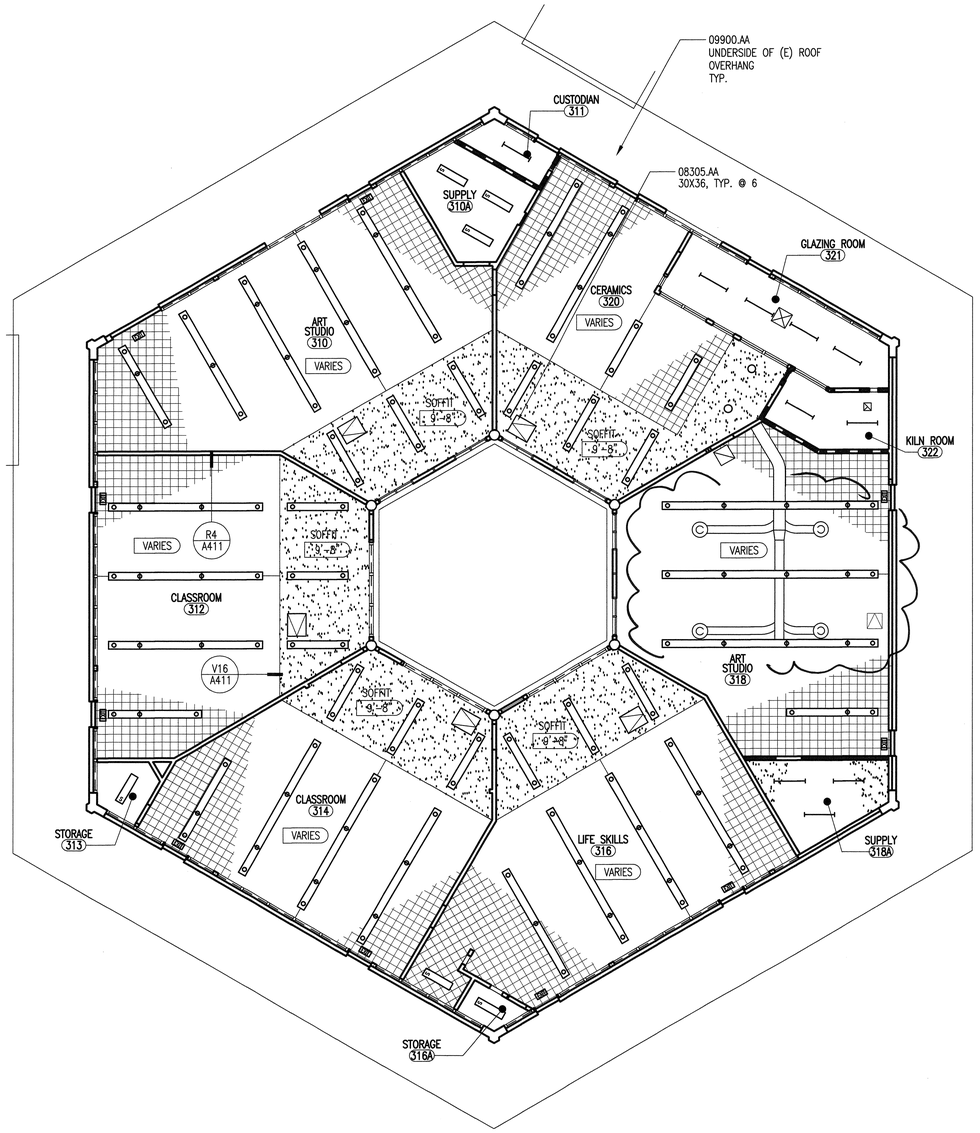

BUILDING L REFLECTED CEILING PLAN — M19
200 BUILDING — 1/8"=1'-0"

BUILDING M REFLECTED CEILING PLAN — A19
300 BUILDING — 1/8"=1'-0"

KEYNOTES

KEYNOTES REFERENCE SPECIFICATION SECTIONS BY MEANS OF A FIVE-DIGIT NUMBER IDENTIFYING THE SECTION WHERE A MORE COMPLETE DESCRIPTION OF THE ITEM INDICATED WILL BE FOUND. THE LETTER SUFFIX OF THE KEYNOTE DOES NOT RELATE TO ANY CORRESPONDING REFERENCE LETTER IN THE SPECIFICATION. KEYNOTES DO NOT DESCRIBE CONSTRUCTION MEANS, METHODS, TECHNIQUES, SEQUENCES, OR PROCEDURES. NO TRADE JURISDICTIONAL ALLOCATION OF THIS WORK IS INTENDED BY THE SUBDIVISION OF THESE KEYNOTES. IT SHALL BE THE CONTRACTOR'S SOLE RESPONSIBILITY TO SUBDIVIDE THE WORK IN THE MANNER HE DEEMS NECESSARY.

DIVISION 8 – DOORS & WINDOWS

08305.AA ACCESS PANEL

DIVISION 9 – FINISHES

09900.AA PAINT FINISH

CEILING GENERAL NOTES

1) FOR TYPICAL SYMBOLS AND ABBREVIATIONS, SEE G002.
2) FOR TYPICAL CEILING DETAILS, SEE A411.
3) ALL ITEMS SHOWN OR NOTED ARE NEW, UNLESS INDICATED AS EXISTING.
4) HEIGHTS INDICATED ARE TO THE UNDERSIDE OF THE FINISH CEILING OR SOFFIT FROM THE FINISH FLOOR. IF NO CEILING HEIGHT IS GIVEN CEILING HEIGHT IS TO MATCH EXISTING.
5) PROVIDE CEILING ACCESS PANELS AT HARD CEILINGS WHERE REQUIRED TO ACCESS PLUMBING AND MECHANICAL CONTROLS.
6) LIGHT FIXTURES AND MECHANICAL REGISTERS ARE SHOWN FOR LOCATION ONLY. FOR ACTUAL TYPES AND SIZES, SEE ELECTRICAL AND MECHANICAL PLANS
7) FOR EXIT SIGN LOCATIONS AS OCCUR, SEE ELECTRICAL PLANS.
8) THERMAL INSULATION: PROVIDE R19 THERMAL BATT INSULATION BETWEEN ROOF JOISTS, TYPICAL.
9) WHERE CEILINGS ARE (E) TO REMAIN, PATCH AND REPAIR CRACKED OR DAMAGED SURFACES PRIOR TO PAINTING.
10) CONTRACTOR TO REMOVE AND REPLACE (E) CEILING JOISTS/ (E) STRIPPING TO OBTAIN ACCESS TO ABOVE CEILING WORKS.
11) CONTRACTOR TO MODIFY (E) CEILING STRIPPINGS TO INSTALL CEILING DIFFUSERS AND ACCESS PANELS.

CEILING LEGEND

- SUSPENDED ACOUSTICAL TILE CEILING
- 12 X 12 ACOUSTICAL CEILING TILES O/ (N) 5/8" GYP.BD. REFER TO DETAIL R4/A411 OR O/ (E) STRIPPING REFER TO DETAIL V12/A411
- NEW GYP. BOARD SOFFIT OR CEILING
- EXISTING CEILING/SOFFIT W/ PLASTER OR GYP. BD – REPAINT
- EXHAUST FAN GRILL
- SUPPLY AIR DIFFUSER
- RETURN AIR DIFFUSER
- 2x4 RECESSED FLUORESCENT LIGHT FIXTURE
- 2x4 SURFACE MOUNTED FLUORESCENT LIGHT FIXTURE
- 1x4 SURFACE MOUNTED FLUORESCENT LIGHT FIXTURE
- SURFACE MOUNTED FLUORESCENT STRIP FIXTURE
- PENDANT-MOUNT FLUORESCENT LIGHT FIXTURE
- RECESSED LINEAR LIGHT FIXTURE
- EXIT ILLUMINATION LIGHT FIXTURE
- RECESSED CFL DOWNLIGHT
- (E) PENDENT-MOUNT H.I.D. FIXTURE TO REMAIN
- +8'-0" CEILING HEIGHT A.F.F.
- EXPOSED EXPOSED STRUCTURE, PAINT.

KEY PLAN

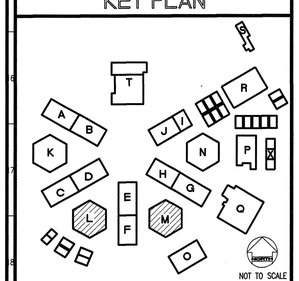

NOT TO SCALE

REVISED MAY 12 2004

IDENTIFICATION STAMP
DIV. OF THE STATE ARCHITECT
OFFICE OF REGULATION SERVICES
FILE NO. 19-H51
APPL. NO. 03-106434
AC. FLS. SS.
DATE

Dougherty + Dougherty
Architecture • Planning • Interior Design
2697 Bristol Street
Costa Mesa, CA 92626
(714) 427-0277

Copyright © 2002 Dougherty + Dougherty

Consultant Seal

Architect Seal

LA MIRADA HIGH SCHOOL
MODERNIZATION
NORWALK - LA MIRADA UNIFIED SCHOOL DISTRICT
13520 ADELFA DRIVE LA MIRADA, CA 90638

CLASSROOM
BUILDINGS L & M
REF. CEILING PLANS

Date:	04-01-04
Job:	20237.50
Scale:	AS NOTED
Drawn:	
Revisions:	

A404

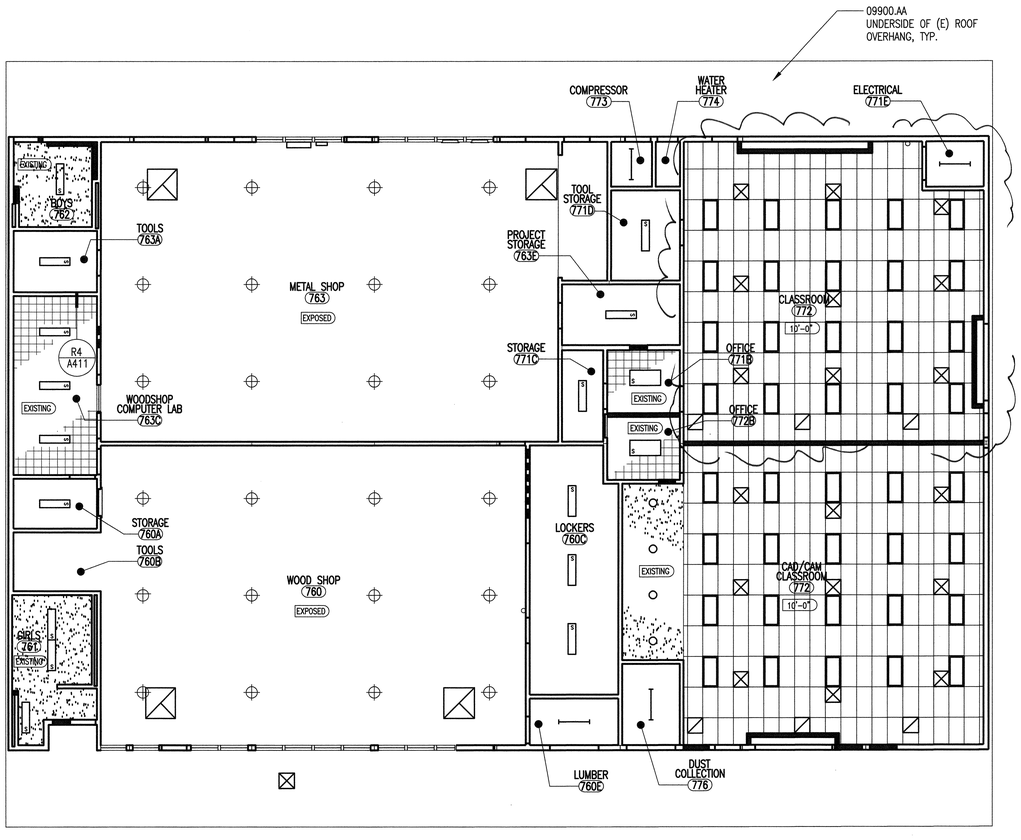

BUILDING R REFLECTED CEILING PLAN
SHOP BUILDING
L19
1/8"=1'-0"

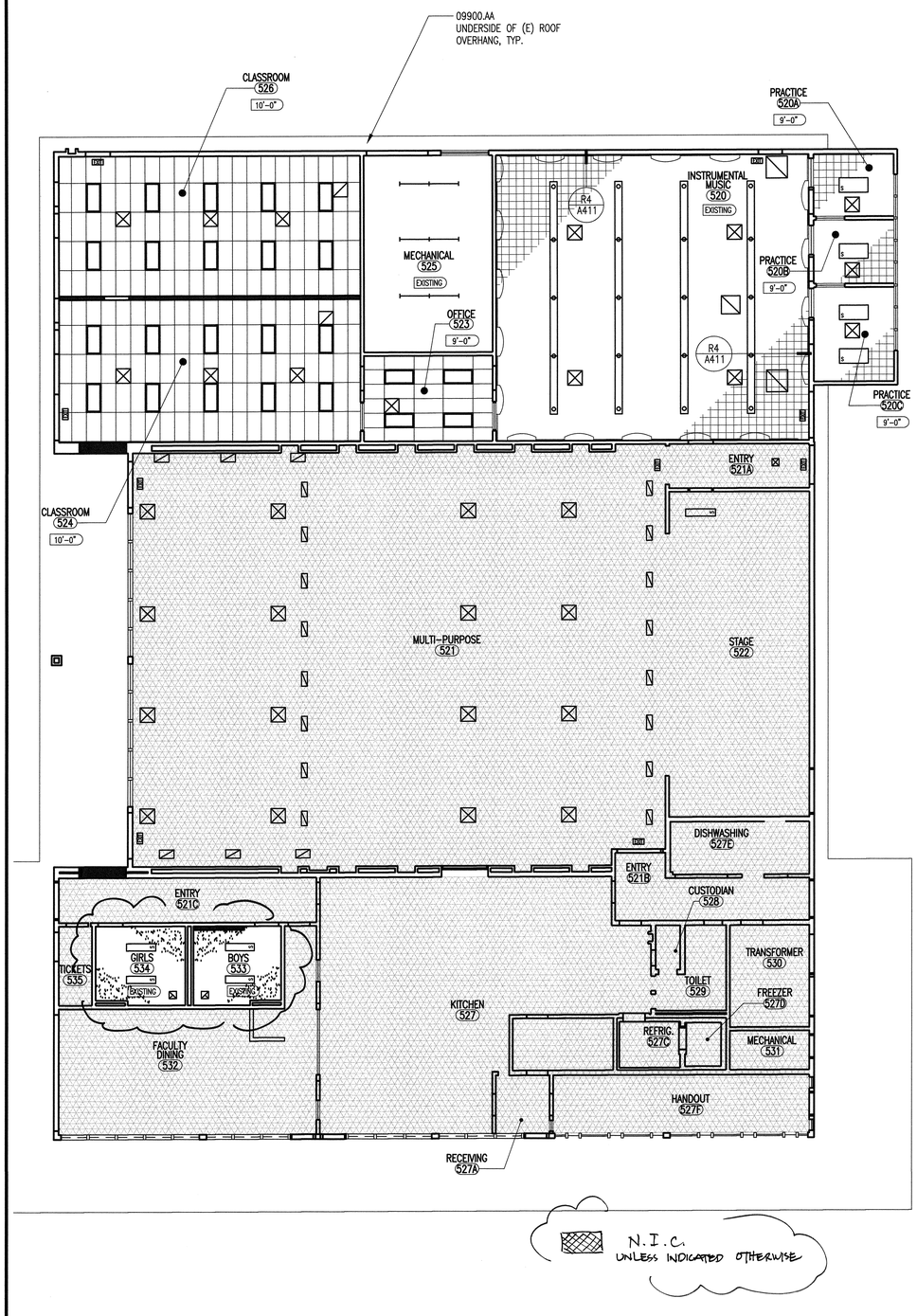

BUILDING T REFLECTED CEILING PLAN
MULTI-PURPOSE BUILDING
A19
1/8"=1'-0"

KEYNOTES

KEYNOTES REFERENCE SPECIFICATION SECTIONS BY MEANS OF A FIVE-DIGIT NUMBER IDENTIFYING THE SECTION WHERE A MORE COMPLETE DESCRIPTION OF THE ITEM INDICATED WILL BE FOUND. THE LETTER SUFFIX OF THE KEYNOTE DOES NOT RELATE TO ANY CORRESPONDING REFERENCE LETTER IN THE SPECIFICATION. KEYNOTES DO NOT DESCRIBE CONSTRUCTION MEANS, METHODS, TECHNIQUES, SEQUENCES, OR PROCEDURES. NO TRADE JURISDICTIONAL ALLOCATION OF THIS WORK IS INTENDED BY THE SUBDIVISION OF THESE KEYNOTES. IT SHALL BE THE CONTRACTOR'S SOLE RESPONSIBILITY TO SUBDIVIDE THE WORK IN THE MANNER HE DEEMS NECESSARY.

DIVISION 9 – FINISHES

09900.AA PAINT FINISH

CEILING GENERAL NOTES

1) FOR TYPICAL SYMBOLS AND ABBREVIATIONS, SEE G002.
2) FOR TYPICAL CEILING DETAILS, SEE A411.
3) ALL ITEMS SHOWN OR NOTED ARE NEW, UNLESS INDICATED AS EXISTING.
4) HEIGHTS INDICATED ARE TO THE UNDERSIDE OF THE FINISH CEILING OR SOFFIT FROM THE FINISH FLOOR. IF NO CEILING HEIGHT IS GIVEN CEILING HEIGHT IS TO MATCH EXISTING.
5) PROVIDE CEILING ACCESS PANELS AT HARD CEILINGS WHERE REQUIRED TO ACCESS PLUMBING AND MECHANICAL CONTROLS.
6) LIGHT FIXTURES AND MECHANICAL REGISTERS ARE SHOWN FOR LOCATION ONLY. FOR ACTUAL TYPES AND SIZES, SEE ELECTRICAL AND MECHANICAL PLANS
7) FOR EXIT SIGN LOCATIONS AS OCCUR, SEE ELECTRICAL PLANS.
8) THERMAL INSULATION: PROVIDE R19 THERMAL BATT INSULATION BETWEEN ROOF JOISTS, TYPICAL.
9) WHERE CEILINGS ARE (E) TO REMAIN, PATCH AND REPAIR CRACKED OR DAMAGED SURFACES PRIOR TO PAINTING.
10) CONTRACTOR TO REMOVE AND REPLACE (E) CEILING JOISTS/ (E) STRIPPING TO OBTAIN ACCESS TO ABOVE CEILING WORKS.
11) CONTRACTOR TO MODIFY (E) CEILING STRIPPINGS TO INSTALL CEILING DIFFUSERS AND ACCESS PANELS.

CEILING LEGEND

- SUSPENDED ACOUSTICAL TILE CEILING
- 12 X 12 ACOUSTICAL CEILING TILES O/ (N) 5/8" GYP.BD. REFER TO DETAIL R4/A411 OR O/ (E) STRIPPING REFER TO DETAIL V12/A411
- NEW GYP. BOARD SOFFIT OR CEILING
- EXISTING CEILING/SOFFIT W/ PLASTER OR GYP. BD – REPAINT
- EXHAUST FAN GRILL
- SUPPLY AIR DIFFUSER
- RETURN AIR DIFFUSER
- 2x4 RECESSED FLUORESCENT LIGHT FIXTURE
- 2x4 SURFACE MOUNTED FLUORESCENT LIGHT FIXTURE
- 1x4 SURFACE MOUNTED FLUORESCENT LIGHT FIXTURE
- SURFACE MOUNTED FLUORESCENT STRIP FIXTURE
- PENDANT-MOUNT FLUORESCENT LIGHT FIXTURE
- RECESSED LINEAR LIGHT FIXTURE
- EXIT ILLUMINATION LIGHT FIXTURE
- RECESSED CFL DOWNLIGHT
- (E) PENDENT-MOUNT H.I.D. FIXTURE TO REMAIN
- +8'-0" CEILING HEIGHT A.F.F.
- EXPOSED EXPOSED STRUCTURE, PAINT.

KEY PLAN

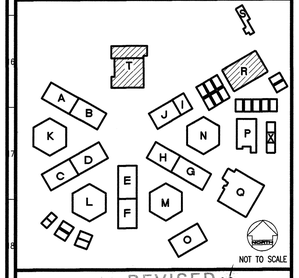

NOT TO SCALE

REVISED
MAY 12 2004

IDENTIFICATION STAMP
DIV. OF THE STATE ARCHITECT
OFFICE OF REGULATION SERVICES
FILE NO. 19-H51
APPL. NO. 03-106434
AC. FLS. SS.
DATE

Dougherty + Dougherty
Architecture • Planning • Interior Design
3194-D Airport Loop Drive
Costa Mesa, CA 92626
(714) 427-0277

Copyright © 2002 Dougherty + Dougherty

Consultant Seal

Architect Seal

LA MIRADA HIGH SCHOOL
MODERNIZATION
NORWALK - LA MIRADA UNIFIED SCHOOL DISTRICT
13520 ADELFA DRIVE LA MIRADA, CA 90638

BUILDINGS
R & T
REF. CEILING PLANS

Date:	04-01-04
Job:	20237.50
Scale:	AS NOTED
Drawn:	
Revisions:	

A405

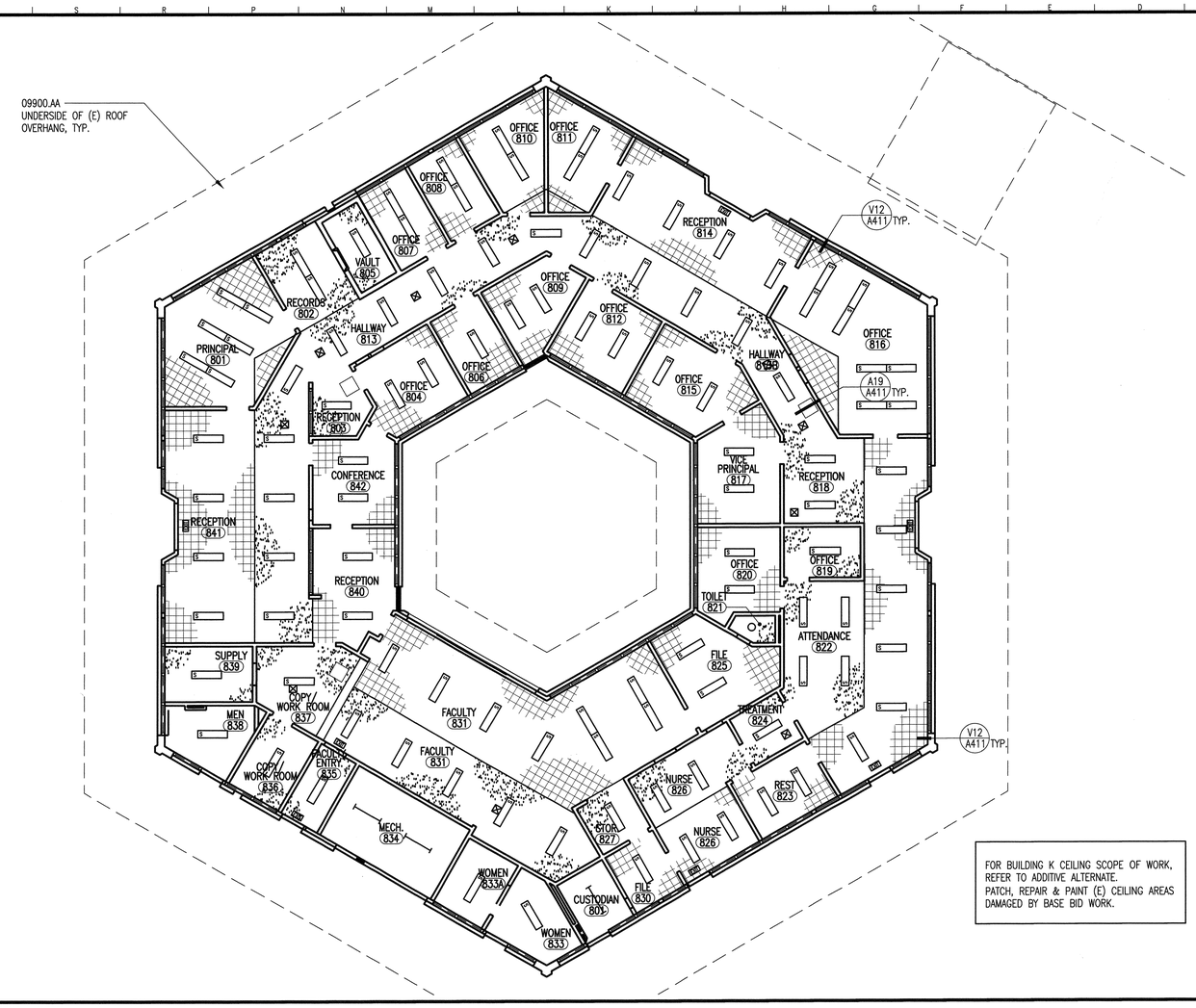

FOR BUILDING K CEILING SCOPE OF WORK, REFER TO ADDITIVE ALTERNATE.
PATCH, REPAIR & PAINT (E) CEILING AREAS DAMAGED BY BASE BID WORK.

BUILDING K REFLECTED CEILING PLAN

ADMINISTRATION BUILDING

A19
1/8"=1'-0"

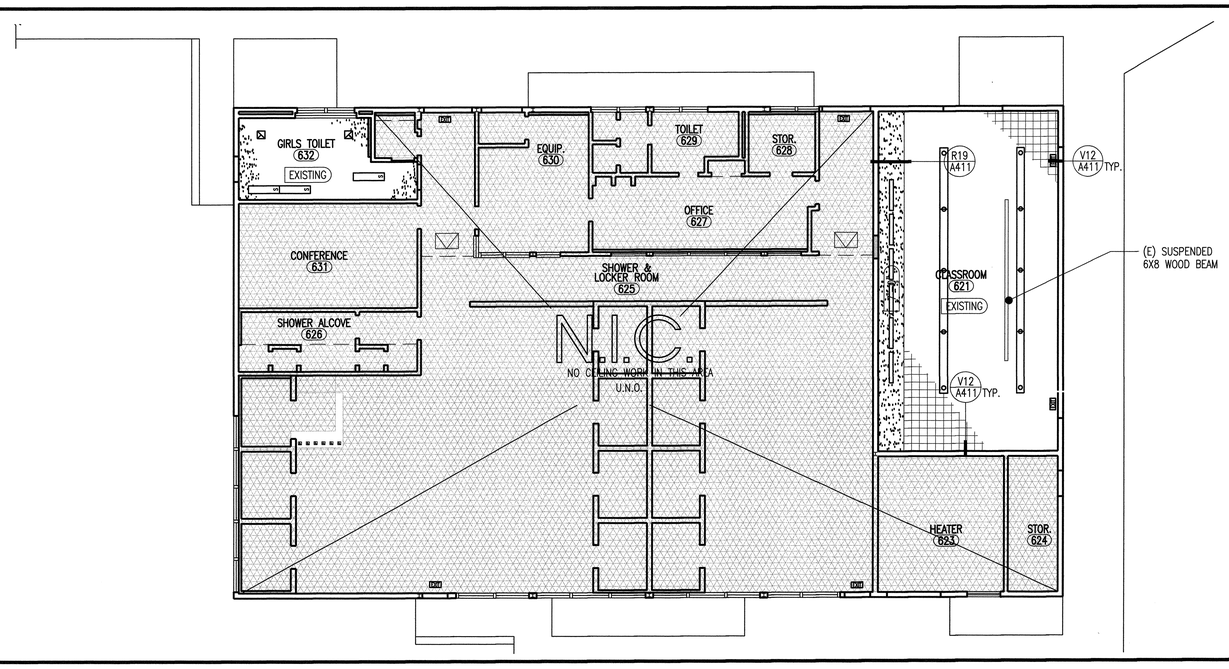

BUILDING O REFLECTED CEILING PLAN

GIRLS LOCKER BUILDING

A19
1/8"=1'-0"

KEYNOTES

KEYNOTES REFERENCE SPECIFICATION SECTIONS BY MEANS OF A FIVE-DIGIT NUMBER IDENTIFYING THE SECTION WHERE A MORE COMPLETE DESCRIPTION OF THE ITEM INDICATED WILL BE FOUND. THE LETTER SUFFIX OF THE KEYNOTE DOES NOT RELATE TO ANY CORRESPONDING REFERENCE LETTER IN THE SPECIFICATION. KEYNOTES DO NOT DESCRIBE CONSTRUCTION MEANS, METHODS, TECHNIQUES, SEQUENCES, OR PROCEDURES. NO TRADE JURISDICTIONAL ALLOCATION OF THIS WORK IS INTENDED BY THE SUBDIVISION OF THESE KEYNOTES. IT SHALL BE THE CONTRACTOR'S SOLE RESPONSIBILITY TO SUBDIVIDE THE WORK IN THE MANNER HE DEEMS NECESSARY.

DIVISION 9 – FINISHES

09900.AA PAINT FINISH

CEILING GENERAL NOTES

1) FOR TYPICAL SYMBOLS AND ABBREVIATIONS, SEE G002.
2) FOR TYPICAL CEILING DETAILS, SEE A411.
3) ALL ITEMS SHOWN OR NOTED ARE NEW, UNLESS INDICATED AS EXISTING.
4) HEIGHTS INDICATED ARE TO THE UNDERSIDE OF THE FINISH CEILING OR SOFFIT FROM THE FINISH FLOOR. IF NO CEILING HEIGHT IS GIVEN CEILING HEIGHT IS TO MATCH EXISTING.
5) PROVIDE CEILING ACCESS PANELS AT HARD CEILINGS WHERE REQUIRED TO ACCESS PLUMBING AND MECHANICAL CONTROLS.
6) LIGHT FIXTURES AND MECHANICAL REGISTERS ARE SHOWN FOR LOCATION ONLY. FOR ACTUAL TYPES AND SIZES, SEE ELECTRICAL AND MECHANICAL PLANS
7) FOR EXIT SIGN LOCATIONS AS OCCUR, SEE ELECTRICAL PLANS.
8) THERMAL INSULATION: PROVIDE R19 THERMAL BATT INSULATION BETWEEN ROOF JOISTS, TYPICAL.
9) WHERE CEILINGS ARE (E) TO REMAIN, PATCH AND REPAIR CRACKED OR DAMAGED SURFACES PRIOR TO PAINTING.
10) CONTRACTOR TO REMOVE AND REPLACE (E) CEILING JOISTS/ (E) STRIPPING TO OBTAIN ACCESS TO ABOVE CEILING WORKS.
11) CONTRACTOR TO MODIFY (E) CEILING STRIPPINGS TO INSTALL CEILING DIFFUSERS AND ACCESS PANELS.

CEILING LEGEND

- SUSPENDED ACOUSTICAL TILE CEILING
- 12 X 12 ACOUSTICAL CEILING TILES O/ (N) 5/8" GYP.BD. REFER TO DETAIL R4/A411 OR O/ (E) STRIPPING REFER TO DETAIL V12/A411
- NEW GYP. BOARD SOFFIT OR CEILING
- EXISTING CEILING/SOFFIT W/ PLASTER OR GYP. BD – REPAINT
- EXHAUST FAN GRILL
- SUPPLY AIR DIFFUSER
- RETURN AIR DIFFUSER
- 2x4 RECESSED FLUORESCENT LIGHT FIXTURE
- 2x4 SURFACE MOUNTED FLUORESCENT LIGHT FIXTURE
- 1x4 SURFACE MOUNTED FLUORESCENT LIGHT FIXTURE
- SURFACE MOUNTED FLUORESCENT STRIP FIXTURE
- PENDANT-MOUNT FLUORESCENT LIGHT FIXTURE
- RECESSED LINEAR LIGHT FIXTURE
- EXIT ILLUMINATION LIGHT FIXTURE
- RECESSED CFL DOWNLIGHT
- (E) PENDENT-MOUNT H.I.D. FIXTURE TO REMAIN
- +8'-0" CEILING HEIGHT A.F.F.
- EXPOSED EXPOSED STRUCTURE, PAINT.

KEY PLAN

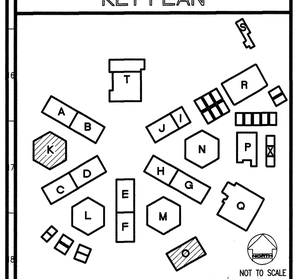

NOT TO SCALE

REVISED MAY 1 2 2003

IDENTIFICATION STAMP
DIV. OF THE STATE ARCHITECT
OFFICE OF REGULATION SERVICES
FILE NO. 19-H51
APPL. NO. 03-106434
AC. 01 FLS. NLT SS
DATE

Dougherty + Dougherty
Architecture · Planning · Interior Design
2151-H Laguna Canyon Road
Costa Mesa, CA 92626
(714) 427-0277

Copyright © 2002 Dougherty + Dougherty

Consultant Seal

Architect Seal

LA MIRADA HIGH SCHOOL
MODERNIZATION
NORWALK - LA MIRADA UNIFIED SCHOOL DISTRICT
13520 ADELFA DRIVE LA MIRADA, CA 90638

BUILDINGS
K & O
REF. CEILING PLANS

Date:	04-01-04
Job:	20237.50
Scale:	AS NOTED
Drawn:	
Revisions:	
1	12-01-03

A406

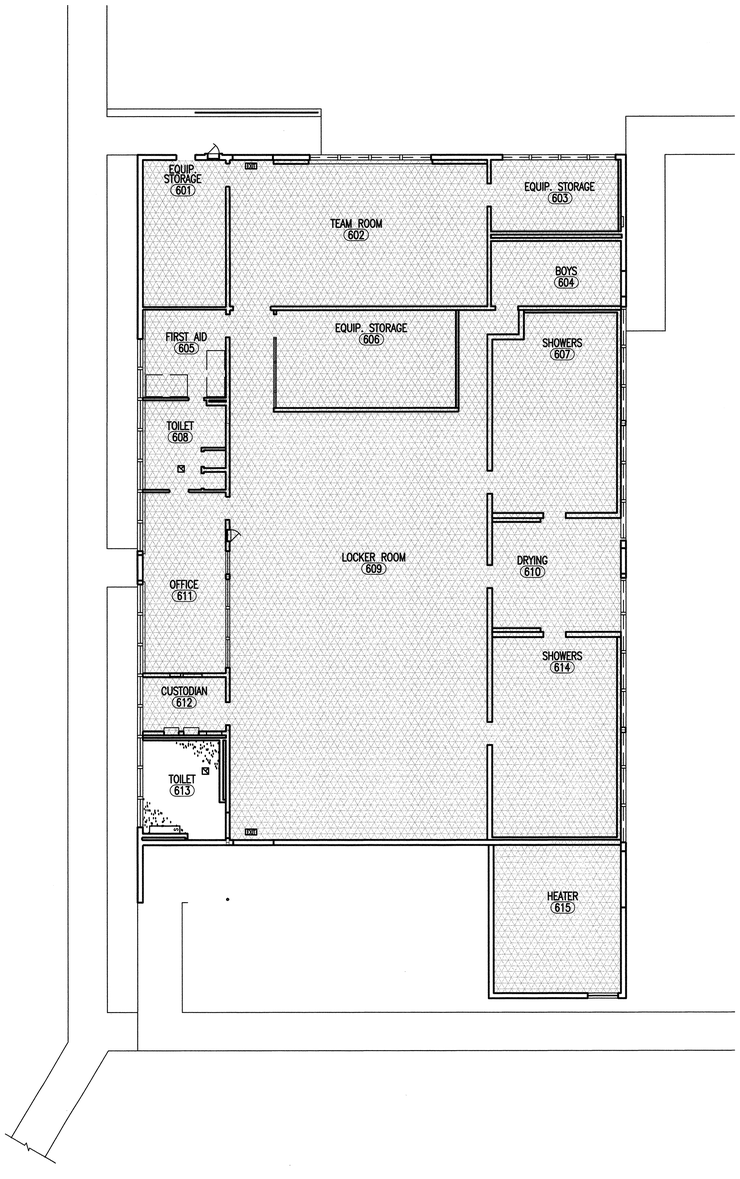

BUILDING P REFLECTED CEILING PLAN

BOYS LOCKER ROOM BUILDING

P19

1/8"=1'-0"

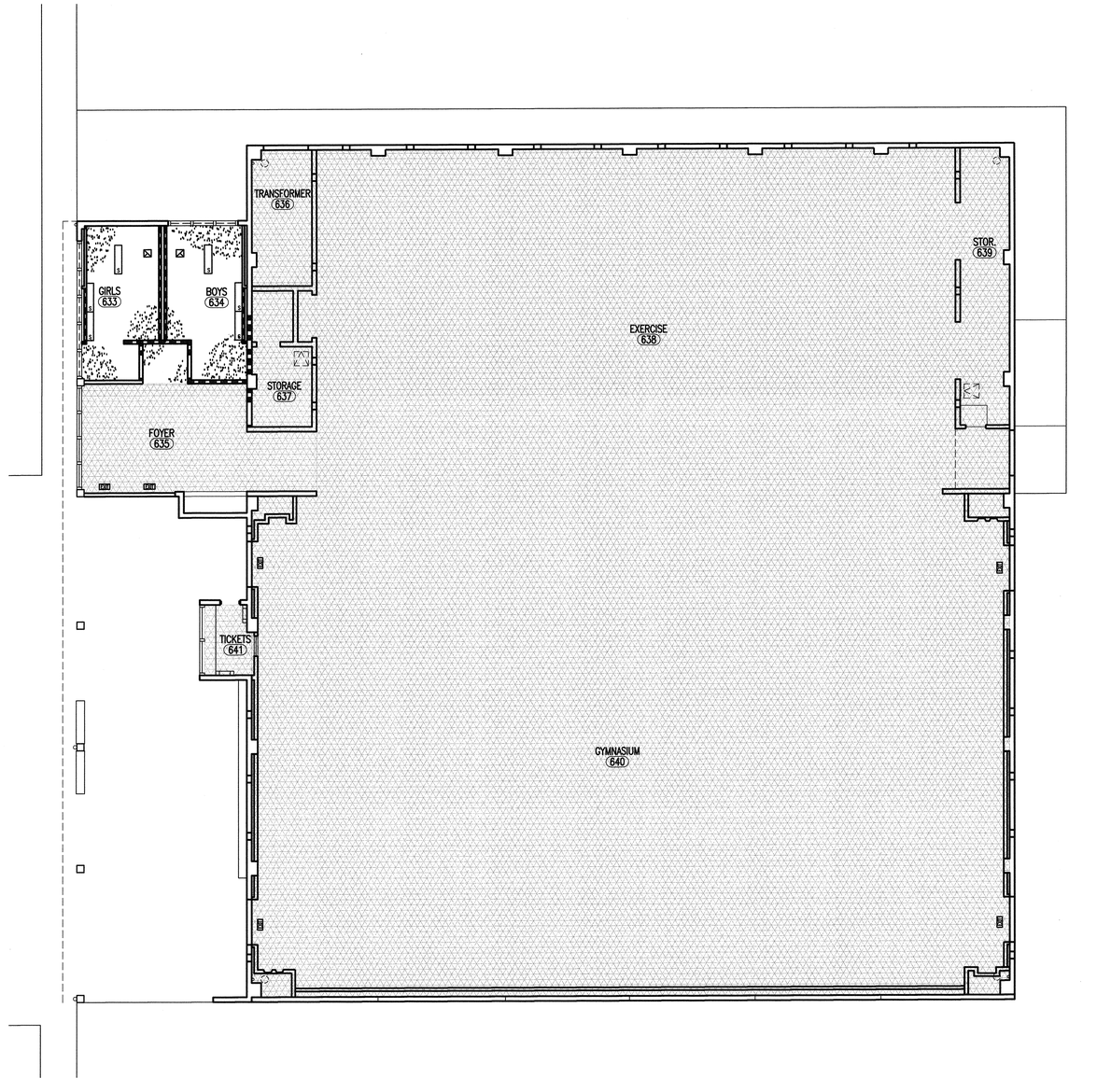

BUILDING Q REFLECTED CEILING PLAN

GYMNASIUM BUILDING

A19

1/8"=1'-0"

KEYNOTES

KEYNOTES REFERENCE SPECIFICATION SECTIONS BY MEANS OF A FIVE-DIGIT NUMBER IDENTIFYING THE SECTION WHERE A MORE COMPLETE DESCRIPTION OF THE ITEM INDICATED WILL BE FOUND. THE LETTER SUFFIX OF THE KEYNOTE DOES NOT RELATE TO ANY CORRESPONDING REFERENCE LETTER IN THE SPECIFICATION. KEYNOTES DO NOT DESCRIBE CONSTRUCTION MEANS, METHODS, TECHNIQUES, SEQUENCES, OR PROCEDURES. NO TRADE JURISDICTIONAL ALLOCATION OF THIS WORK IS INTENDED BY THE SUBDIVISION OF THESE KEYNOTES. IT SHALL BE THE CONTRACTOR'S SOLE RESPONSIBILITY TO SUBDIVIDE THE WORK IN THE MANNER HE DEEMS NECESSARY.

CEILING GENERAL NOTES

1) FOR TYPICAL SYMBOLS AND ABBREVIATIONS, SEE G002.
2) FOR TYPICAL CEILING DETAILS, SEE A411.
3) ALL EXISTING ITEMS TO REMAIN, U.N.O.
4) HEIGHTS INDICATED ARE TO THE UNDERSIDE OF THE FINISH CEILING OR SOFFIT FROM THE FINISH FLOOR. IF NO CEILING HEIGHT IS GIVEN CEILING HEIGHT IS TO MATCH EXISTING.
5) PROVIDE CEILING ACCESS PANELS AT HARD CEILINGS WHERE REQUIRED TO ACCESS PLUMBING AND MECHANICAL CONTROLS.
6) LIGHT FIXTURES AND MECHANICAL REGISTERS ARE SHOWN FOR LOCATION ONLY. FOR ACTUAL TYPES AND SIZES, SEE ELECTRICAL AND MECHANICAL PLANS
7) FOR EXIT SIGN LOCATIONS AS OCCUR, SEE ELECTRICAL PLANS.
8) THERMAL INSULATION: PROVIDE R19 THERMAL BATT INSULATION BETWEEN ROOF JOISTS, TYPICAL.
9) WHERE CEILINGS ARE (E) TO REMAIN, PATCH AND REPAIR CRACKED OR DAMAGED SURFACES PRIOR TO PAINTING.
10) CONTRACTOR TO REMOVE AND REPLACE (E) CEILING JOISTS/ (E) STRIPPING TO OBTAIN ACCESS TO ABOVE CEILING WORKS.
11) CONTRACTOR TO MODIFY (E) CEILING STRIPPINGS TO INSTALL CEILING DIFFUSERS AND ACCESS PANELS.

CEILING LEGEND

- N.I.C. UNLESS INDICATED ON ELECTRICAL PLANS
- NEW GYP. BOARD SOFFIT OR CEILING
- EXHAUST FAN GRILL
- 1x4 SURFACE MOUNTED FLUORESCENT LIGHT FIXTURE
- SURFACE MOUNTED FLUORESCENT STRIP FIXTURE
- (E) EXIT ILLUMINATION SIGN
- RECESSED CFL DOWNLIGHT
- +8'-0" CEILING HEIGHT A.F.F.

KEY PLAN

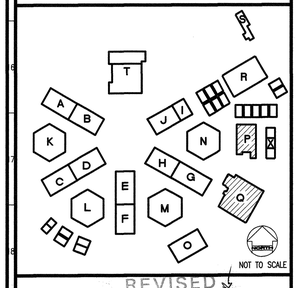

REVISED MAY 12 2004

IDENTIFICATION STAMP
DIV. OF THE STATE ARCHITECT
OFFICE OF REGULATION SERVICES
FILE NO. 19-H51
APPL. NO. 03-106434
AC ___ FLS. ___ SS ___
DATE ___

Dougherty + Dougherty
Architecture · Planning · Interior Design
2306 Plaza Del Amo
Torrance, CA 90501
(714) 427-0277

Copyright © 2002 Dougherty + Dougherty

Consultant Seal

Architect Seal

LA MIRADA HIGH SCHOOL
MODERNIZATION
NORWALK - LA MIRADA UNIFIED SCHOOL DISTRICT
13520 ADELFA DRIVE LA MIRADA, CA 90638

BUILDINGS
P & Q
CEILING PLANS

Date:	04-01-04
Job:	20237.50
Scale:	AS NOTED
Drawn:	
Revisions:	

A407

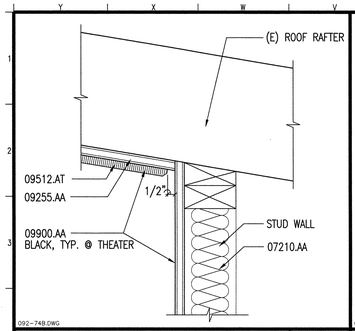

CEILING • (E) WALL & (E) RAFTER — V4 — 3" = 1'-0"

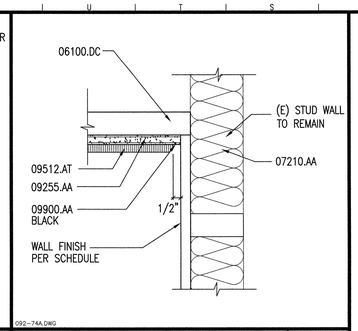

CEILING • (E) WALL — R4 — 3" = 1'-0"

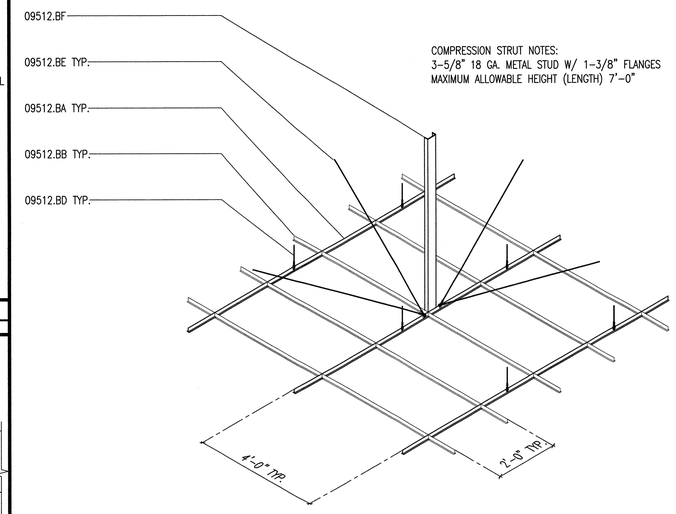

NOTE: FOR GENERAL SUSPENDED LAY-IN CEILING NOTES SEE DETAIL A16/-

NOTE: PROVIDE SETS OF FOUR SPLAYED BRACING WIRES, ORIENTED 90 DEGREES FROM EACH OTHER, AND COMPRESSION STRUT AT A SPACING NOT MORE THAN 12'-0" X 12'-0" ON CENTER. PROVIDE 12 GUAGE MINIMUM SPLAYED BRACING WIRES FASTENED WITH NOT LESS THAN FOUR TIGHT TURNS IN 1-1/2 INCHES AT BOTH ENDS OF WIRE. SLOPE OF SPLAYED BRACING WIRES SHOULD NOT EXCEED 45 DEGREES FROM THE PLANE OF THE CEILING.

NOTE: PROVIDE HANGER WIRES AT A SPACING NOT MORE THAN 4'-0" X 4'-0" ON CENTER. PROVIDE 12 GUAGE MINIMUM HANGER WIRES FASTENED WITH NOT LESS THAN THREE TIGHT TURNS IN 1-1/2 INCHES AT BOTH ENDS OF WIRE.

2' X 4' SUSPENDED LAY-IN CEILING GRID — H8 — N.T.S.

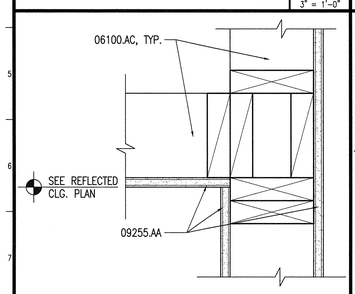

GYP. BD. CEILING/WALL DETAIL — V8 — 3"=1'-0"

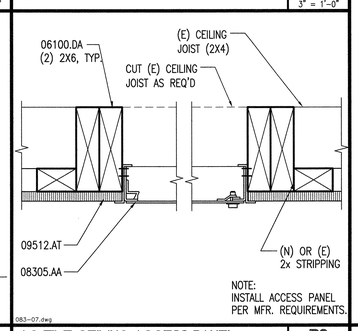

AC TILE CEILING ACCESS PANEL — R8 — 3" = 1'-0"
PARALLEL TO (E) CEILING JOIST

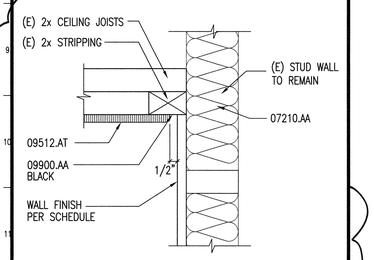

CEILING • (E) WALL — V12 — 3" = 1'-0"

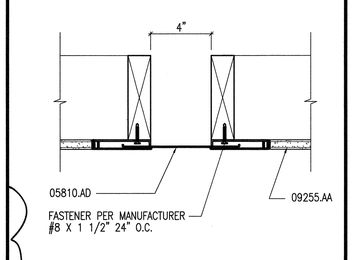

WALL EXPANSION JOINT (CEILING SIM.) — R12 — 3"=1'-0"

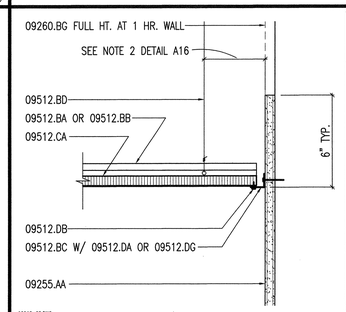

SUSPENDED LAY-IN CEILING AT WALL — M12 — 3"=1'-0"
FIXED END

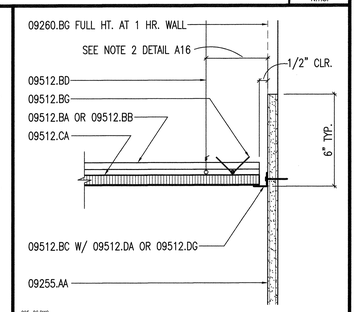

SUSPENDED LAY-IN CEILING AT WALL — H12 — 3"=1'-0"
FREE END

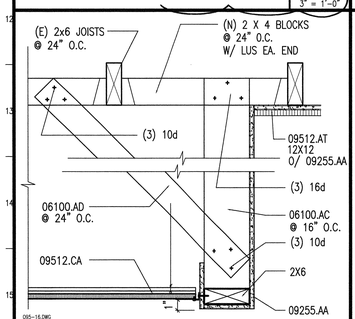

GYP. BD. SOFFIT CEILING — V16 — 1 1/2"=1'-0"

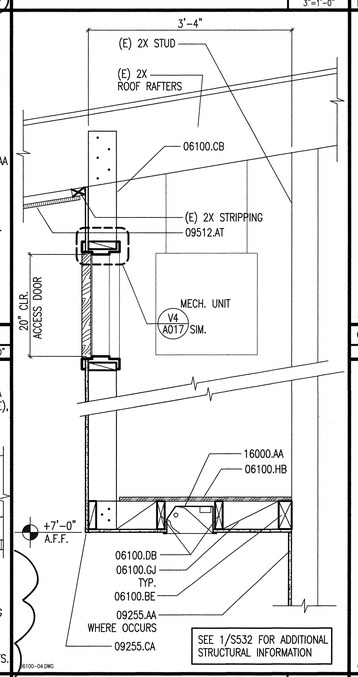

SOFFIT DETAIL — R19 — 1"=1'-0"

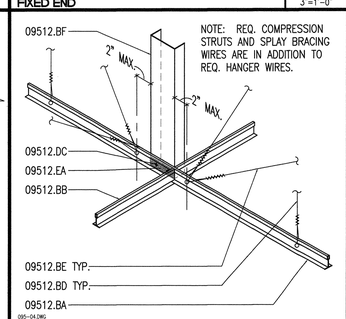

COMPRESSION STRUT AT LAY-IN CEILING — M16 — N.T.S.

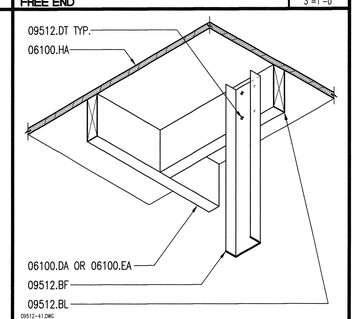

COMPRESSION STRUT AT WD. BLOCKING — H16 — N.T.S.

THE TOTAL WEIGHT OF THE CEILING SYSTEM, INCLUDING AIR CONDITIONING GRILLES AND LIGHT FIXTURES, SHALL NOT EXCEED FOUR (4) POUNDS PER SQUARE FOOT. INSTALLATION SHALL COMPLY WITH D.S.A. I.R. M-3 AND THE FOLLOWING:

(1) 12 GAUGE MINIMUM HANGER WIRES MAY BE USED FOR UP TO AND INCLUDING 4'-0" X 4'-0" GRID SPACING AND SHALL BE ATTACHED TO MAIN RUNNERS.

(2) PROVIDE 12 GAUGE HANGER WIRES AT THE ENDS OF ALL MAIN AND CROSS RUNNERS WITHIN 8" OF THE SUPPORT OR WITHIN 1/4 OF THE LENGTH OF THE END TEE, WHICHEVER IS LEAST, FOR THE PERIMETER OF THE CEILING AREA.

(3) PROVIDE TRAPEZE OR OTHER SUPPLEMENTARY SUPPORT MEMBERS AT OBSTRUCTIONS TO TYPICAL HANGER SPACING. PROVIDE ADDITIONAL HANGERS, STRUTS OR BRACES AS REQUIRED AT ALL CEILING BREAKS, SOFFITS OR DISCONTINUOUS AREAS. HANGER WIRES THAT ARE MORE THAN 1 IN 6 OUT OF PLUMB ARE TO HAVE COUNTER-SLOPING WIRES.

(4) CEILING GRID MEMBERS MAY BE ATTACHED TO NOT MORE THAN TWO (2) ADJACENT WALLS. CEILING GRID MEMBERS SHALL BE FREE AND AT LEAST 1/2" CLEAR OF OTHER WALLS. IF WALLS RUN DIAGONALLY TO CEILING GRID SYSTEM RUNNERS, ONE END OF MAIN AND CROSS RUNNERS SHOULD BE FREE AND A MINIMUM OF 1/2 INCH CLEAR OF WALL.

(5) AT THE PERIMETER OF THE CEILING AREA WHERE MAIN OR CROSS RUNNERS ARE NOT CONNECTED TO THE ADJACENT WALL PROVIDE INTERCONNECTION BETWEEN THE RUNNERS AT THE FREE END TO PREVENT LATERAL SPREADING. A METAL STRUT OR A 16 GAUGE WIRE WITH A POSITIVE MECHANICAL CONNECTION TO THE RUNNER MAY BE USED. WHERE THE PERPINDICULAR DISTANCE FROM THE WALL TO THE FIRST PARALLEL RUNNER IS 12" OR LESS, THIS INTERLOCK IS NOT REQUIRED.

(6) PROVIDE BRACING ASSEMBLIES CONSISTING OF A COMPRESSION STRUT AND FOUR (4) 12 GAUGE SPLAYED BRACING WIRES ORIENTED 90 DEGREES FROM EACH OTHER AT THE FOLLOWING SPACING:

(A) FOR SCHOOL BUILDINGS, PLACE BRACING ASSEMBLIES AT A SPACING NOT MORE THAN 12'-0" X 12'-0" ON CENTER.

(B) PROVIDE BRACING ASSEMBLIES AT LOCATIONS NOT MORE THAN ONE HALF (1/2) THE SPACINGS GIVEN ABOVE, FROM EACH PERIMETER WALL AND AT THE EDGE OF VERTICAL CEILING OFFSETS.

(C) THE SLOPE OF THESE WIRES SHALL NOT EXCEED 45 DEGREES FROM THE PLANE OF THE CEILING AND SHALL BE TAUT WITHOUT CAUSING THE CEILING TO LIFT. SPLICES IN BRACING WIRES ARE NOT TO BE PERMITTED.

(D) SUSPENDED ACOUSTICAL CEILING SYSTEMS WITH A CEILING AREA OF 144 SQUARE FEET OR LESS, AND FIRE RATED SUSPENDED ACOUSTICAL CEILING SYSTEMS WITH A CEILING AREA OF 96 SQUARE FEET OR LESS, SURROUNDED BY WALLS WHICH CONNECT DIRECTLY TO THE STRUCTURE ABOVE, DO NOT REQUIRE BRACING ASSEMBLIES WHEN ATTACHED TO TWO (2) ADJACENT WALLS.

(7) FASTEN HANGER WIRES WITH NOT LESS THAN THREE (3) TIGHT TURNS. FASTEN BRACING WIRES WITH NOT LESS THAN FOUR (4) TIGHT TURNS. MAKE ALL TIGHT TURNS WITHIN A DISTANCE OF 1-1/2". HANGER OR BRACING WIRE ANCHORS TO THE STRUCTURE SHOULD BE INSTALLED IN SUCH A MANNER THAT THE DIRECTION OF THE WIRE ALIGNS AS CLOSELY AS POSSIBLE WITH THE DIRECTION OF THE FORCES ACTING ON THE WIRE.

NOTE: WIRE TURNS MADE BY MACHINE WHERE BOTH STRANDS HAVE BEEN DEFORMED OR BENT IN WRAPPING CAN WAIVE THE 1-1/2" REQUIREMENT, BUT THE NUMBER OF TURNS SHOULD BE MAINTAINED, AND BE AS TIGHT AS POSSIBLE.

(8) SEPARATE ALL CEILING HANGING AND BRACING WIRES AT LEAST 6" FROM ALL UNBRACED DUCTS, PIPES, CONDUIT, ETC. IT IS ACCEPTABLE TO ATTACH LIGHTWEIGHT ITEMS, SUCH AS SINGLE ELECTRICAL CONDUIT NOT EXCEEDING 3/4" NOMINAL DIAMETER, TO HANGER WIRES USING CONNECTORS ACCEPTABLE TO DSA.

(9) WHEN DRILLED-IN CONCRETE ANCHORS OR SHOT-IN ANCHORS ARE USED IN REINFORCED CONCRETE FOR HANGER WIRES, 1 OUT OF 10 MUST BE FIELD TESTED FOR 200 POUNDS IN TENSION. WHEN DRILLED-IN CONCRETE ANCHORS ARE USED FOR BRACING WIRES, 1 OUT OF 2 MUST BE FIELD TESTED FOR 440 POUNDS IN TENSION. SHOT-IN ANCHORS IN CONCRETE ARE NOT PERMITTED FOR BRACING WIRES. IF ANY SHOT-IN OR DRILLED-IN ANCHOR FAILS, SEE CBC SECTION 1923A.3.5.

NOTE: DRILLED-IN OR SHOT-IN ANCHORS REQUIRE SPECIAL DSA APPROVAL WHEN USED IN PRESTRESSED CONCRETE.

(10) ATTACH ALL LIGHT FIXTURES AND CEILING MOUNTED AIR TERMINALS OR SERVICES, TO THE CEILING GRID RUNNERS TO RESIST A HORIZONTAL FORCE EQUAL TO THE WEIGHT OF THE FIXTURES. SCREWS OR APPROVED FASTENERS ARE REQUIRED.

(11) FLUSH OR RECESSED LIGHT FIXTURES AND AIR TERMINALS OR SERVICES, WEIGHING LESS THAN 56 POUNDS, MAY BE SUPPORTED DIRECTLY ON THE RUNNERS OF A HEAVY DUTY GRID SYSTEM BUT, IN ADDITION, THEY MUST HAVE A MINIMUM OF TWO (2) 12 GAUGE SLACK SAFETY WIRES ATTACHED TO THE FIXTURE AT DIAGONAL CORNERS AND ANCHORED TO THE STRUCTURE ABOVE. ALL 4'-0" X 4'-0" LIGHT FIXTURES MUST HAVE SLACK SAFETY WIRES AT EACH CORNER.

ALL FLUSH OR RECESSED LIGHT FIXTURES AND AIR TERMINALS OR SERVICES WEIGHING 56 POUNDS OR MORE MUST BE INDEPENDENTLY SUPPORTED BY NOT LESS THAN FOUR (4) TAUT 12 GAUGE WIRES EACH ATTACHED TO THE FIXTURE AND TO THE STRUCTURE ABOVE REGARDLESS OF THE TYPE OF CEILING GRID SYSTEM USED.

THE FOUR (4) TAUT 12 GAUGE WIRES INCLUDING THEIR ATTACHMENT TO THE STRUCTURE ABOVE MUST BE CAPABLE OF SUPPORTING FOUR (4) TIMES THE WEIGHT OF THE UNIT.

(12) SUPPORT SURFACE MOUNTED LIGHT FIXTURES BY AT LEAST TWO (2) POSITIVE DEVICES WHICH SURROUND THE CEILING RUNNER AND WHICH ARE EACH SUPPORTED FROM THE STRUCTURE ABOVE BY A 12 GAUGE WIRE. SPRING CLIPS OR CLAMPS THAT CONNECT ONLY TO THE RUNNER ARE NOT ACCEPTABLE.

PROVIDE ADDITIONAL SUPPORTS WHEN LIGHT FIXTURES ARE 8'-0" OR LONGER.

(13) SUPPORT PENDANT MOUNTED LIGHT FIXTURES DIRECTLY FROM THE STRUCTURE ABOVE WITH HANGER WIRES OR CABLES PASSING THROUGH EACH PENDANT HANGER AND CAPABLE OF SUPPORTING FOUR (4) TIMES THE WEIGHT OF THE FIXTURE. A BRACING ASSEMBLY, CONSISTING OF A COMPRESSION STRUT AND FOUR (4) 12 GAUGE SPLAYED BRACING WIRES ORIENTED 90 DEGREES FROM EACH OTHER, IS REQUIRED WHERE THE PENDANT HANGER PENETRATES THE CEILING. SPECIAL DETAILS ARE REQUIRED TO ATTACH THE PENDANT HANGER TO THE BRACING ASSEMBLY TO TRANSMIT HORIZONTAL FORCES.

(14) CEILING GRID SYSTEM DESIGN BASED ON CHICAGO METALLIC 1200 SYSTEM (ARMSTRONG PRELUDE XL SYSTEM). MAIN RUNNER SPLICES AND CROSS RUNNER INTERSECTIONS SHALL BE MECHANICAL INTERLOCKING CONNECTIONS. CLASSIFICATION OF CEILING GRID SYSTEM IS HEAVY DUTY (16 LBS./LIN. FT. MIN.).
MANUFACTURER'S CATALOG NUMBERS:
MAIN RUNNER - 200 (7301).
CROSS RUNNER - 4'-0" - 1204 (XL8341).
CROSS RUNNER - 2'-0" - 1229 (XL7328).

(15) PRIOR TO THE INSTALLATION OF MECHANICAL, PLUMBING, ELECTRICAL AND OTHER EQUIPMENT SHARING INTERSTITIAL OR ATTIC SPACE, THE GENERAL CONTRACTOR SHALL COORDINATE HIS WORK AND THE WORK OF ALL SUBCONTRACTORS USING THIS SPACE FOR THE INSTALLATION OF EQUIPMENT AND OTHER BUILDING COMPONENTS TO INSURE ALL COMPONENTS FIT IN THE SPACE AVAILABLE.

(16) ALL SUSPENDED LAY-IN ACOUSTICAL TILE CEILING GRID SYSTEMS SHALL BE CENTERED IN SPACES AS SHOWN UNLESS NOTED OTHERWISE BY DIMENSION.

(17) MECHANICAL GRILLES AND LIGHT FIXTURES ARE SHOWN FOR LOCATION ONLY. SEE MECHANICAL AND ELECTRICAL DRAWINGS AND SPECIFICATIONS FOR TYPES AND SIZES.

(18) ALL REQUIRED ACCESS PANELS MAY NOT BE SHOWN ON THE ARCHITECTURAL CEILING PLANS. PROVIDE ACCESS PANELS AT HARD CEILINGS WHERE REQUIRED TO ACCESS CONCEALED FIRE DAMPERS, PLUMBING CONTROLS, MECHANICAL CONTROLS, ELECTRICAL BOXES AND OTHER EQUIPMENT. THE CONTRACTOR SHALL COORDINATE THE QUANTITY, SIZE AND LOCATION OF REQUIRED ACCESS PANELS WITH ALL SUBCONTRACTORS.

(19) SMOKE DETECTOR LOCATIONS (WHERE REQUIRED) SHALL BE COORDINATED WITH THE ARCHITECT.

(20) PROVIDE SEISMIC SWAY BRACING IN TWO DIRECTIONS AT 90' FOR ANY SUSPENDED DUCTS, PIPE, CONDUIT OR PENDANT LIGHT FIXTURE THAT CAN NOT SWING FREE AND CLEAR TO 45' IN ANY DIRECTION. THE CONTRACTOR SHALL COORDINATE THE LOCATION OF ALL EXPOSED SWAY BRACING WITH THE ARCHITECT PRIOR TO INSTALLATION. EXCEPTIONS TO REQUIREMENT FOR SWAY BRACING INCLUDE RECTANGULAR AIR-HANDLING DUCTS LESS THAN 6 SQUARE FEET IN CROSS-SECTIONAL AREA, ROUND AIR-HANDLING DUCTS LESS THAN 28" IN DIAMETER, AND DUCTS SUSPENDED BY HANGERS 12" OR LESS. SEE 1998 CALIFORNIA BUILDING CODE CHAPTER 16 INCLUDING TABLE 16-0 AND FOOTNOTES TO TABLE 16-0.

SUSPENDED LAY-IN CEILING NOTES — A16 — N.T.S.

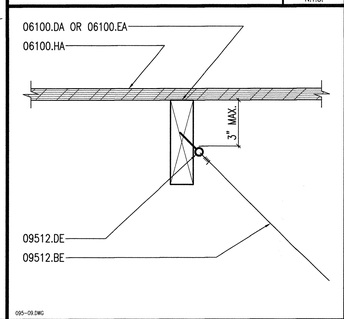

SPLAY BRACING WIRE AT WOOD JOIST — M19 — 3"=1'-0"

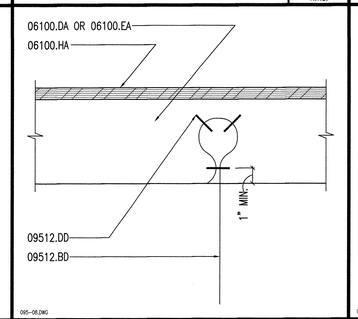

HANGER WIRE AT WOOD JOIST — H19 — 3"=1'-0"

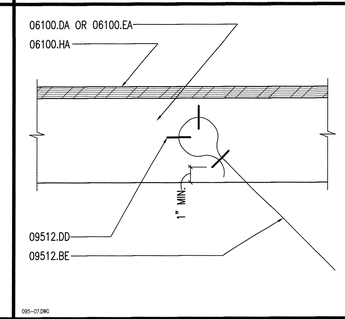

SPLAY BRACING WIRE AT WOOD JOIST — E19 — 3"=1'-0"

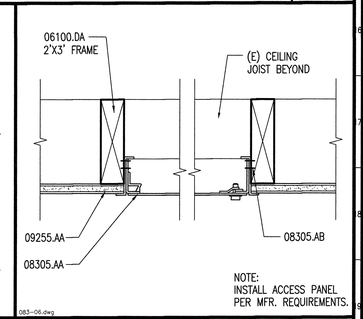

CEILING ACCESS PANEL ON GYPSUM BOARD CEILING — A19 — 3" = 1'-0"

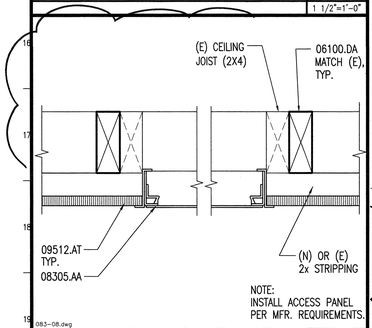

AC TILE CEILING ACCESS PANEL PERPENDICULAR TO (E) CEILING JOIST — V19 — 3" = 1'-0"

KEYNOTES

KEYNOTES REFERENCE SPECIFICATION SECTIONS BY MEANS OF A FIVE-DIGIT NUMBER IDENTIFYING THE SECTION WHERE A MORE COMPLETE DESCRIPTION OF THE ITEM INDICATED WILL BE FOUND. THE LETTER SUFFIX OF THE KEYNOTE DOES NOT RELATE TO ANY CORRESPONDING REFERENCE LETTER IN THE SPECIFICATION. KEYNOTES DO NOT DESCRIBE CONSTRUCTION MEANS, METHODS, TECHNIQUES, SEQUENCES, OR PROCEDURES. NO TRADE JURISDICTIONAL ALLOCATION OF THIS WORK IS INTENDED BY THE SUBDIVISION OF THESE KEYNOTES. IT SHALL BE THE CONTRACTOR'S SOLE RESPONSIBILITY TO SUBDIVIDE THE WORK IN THE MANNER HE DEEMS NECESSARY.

DIVISION 5 - METALS
05400.BB METAL TRACK - SIZE TO MATCH STUDS W/ DEEP LEGS
05810.AD WALL EXPANSION JOINT COVER

DIVISION 6 - WOOD & PLASTICS
06100.AC 2X6 WOOD STUD
06100.AD 2X4 WOOD STUD
06100.BE 3X CONT. LEDGER
06100.CB WOOD STUD - SEE STRUCTURAL
06100.DA WOOD JOIST
06100.DB WOOD JOIST - SEE STRUCTURAL
06100.DC 2X4 CEILING JOIST @ 16" O.C.
06100.EA WOOD RAFTER
06100.GJ 3X BLOCKING
06100.HA PLYWOOD SHEATHING
06100.HB PLYWOOD SHEATHING - SEE STRUCTURAL

DIVISION 7 - THERMAL & MOISTURE PROTECTION
07210.AA R-11 (3-1/2") THERMAL INSULATION

DIVISION 8 - DOORS & WINDOWS
08305.AA ACCESS PANEL
08305.AB #10 S.M.S.

DIVISION 9 - FINISHES
09255.AA 5/8" TYPE "X" GYPSUM BOARD
09255.CA CORNER BEAD
09260.BG 5/8" TYPE "X" GYPSUM BOARD
09512.AT ACOUSTICAL TILES
09512.BA MAIN RUNNER
09512.BB CROSS RUNNER
09512.BC WALL MOLDING
09512.BD 12 GA. HANGER WIRE
09512.BE 12 GA. SPLAYED BRACING WIRE
09512.BF COMPRESSION STRUT - KL/R RATIO LESS THAN 200
09512.BG SLOTTED ANGLE SPACER WITH HORIZONTAL 6D RINGSHANK NAIL
09512.BL 2X BLOCKING W/ 2 - 16D COMMON NAILS AT EACH END
09512.CA LAY-IN ACOUSTICAL CEILING TILE
09512.DA #8 S.M.S. AT EACH STUD
09512.DB POP RIVET
09512.DC 2 - #12 SELF-DRILLING SELF-TAPPING (S.D.S.T.) SCREWS
09512.DD 3 - 1-1/2" X 9 GA. STAPLES OR 3 - STRONGHOLD "J" NAILS AT EACH WIRE LOOP
09512.DE 1/4" DIA. SCREW EYE W/ FULL THREAD EMBEDMENT (1-1/4" MIN.) - INSTALL IN DIRECTION OF WIRE
09512.DG #8 WOOD SCREW AT EACH STUD
09512.DT #14 X 1-1/2" WOOD SCREW
09512.EA NEOPRENE PAD BETWEEN COMPRESSION STRUT AND MAIN RUNNER
09900.AA PAINT FINISH

DIVISION 16 - ELECTRICAL
16000.AA INTERIOR LIGHT FIXTURE - SEE ELECTRICAL

KEY PLAN

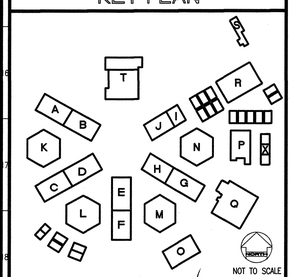

REVISED MAY 1 2 2004
IDENTIFICATION STAMP
DIV. OF THE STATE ARCHITECT
OFFICE OF REGULATION SERVICES
FILE NO. 19-H51
APPL. NO. 03-106434
AC. FLS. MC SS.
DATE

Dougherty ■ Dougherty
Architecture • Planning • Interior Design
5194-D Airport Loop Drive
Costa Mesa, CA 92626
(714) 427-0277

Copyright © 2002 Dougherty + Dougherty

DSA APPROVED PROPERTY OF STATE OF CALIFORNIA
Architect Seal

Consultant Seal

LA MIRADA HIGH SCHOOL
MODERNIZATION
NORWALK - LA MIRADA UNIFIED SCHOOL DISTRICT
13520 ADELFA DRIVE LA MIRADA, CA 90638

CEILING DETAILS

Date:	04-01-04
Job:	20237.50
Scale:	AS NOTED
Drawn:	
Revisions:	

A411

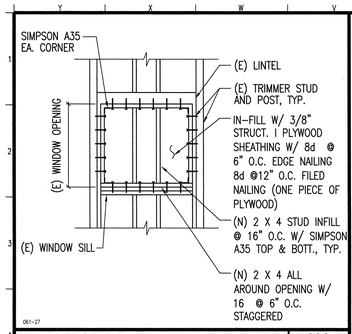

IN-FILL (E) WINDOW — V4 — N.T.S.

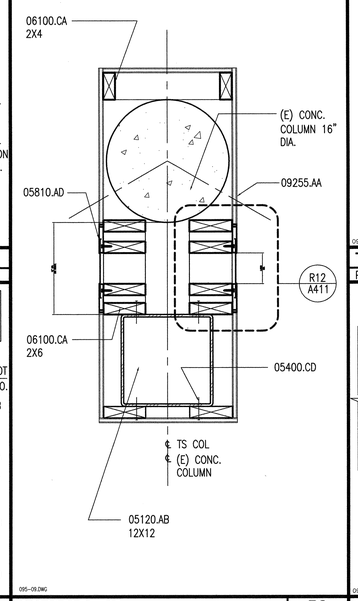

COLUMN DETAIL — R8 — 1-1/2"=1'-0"

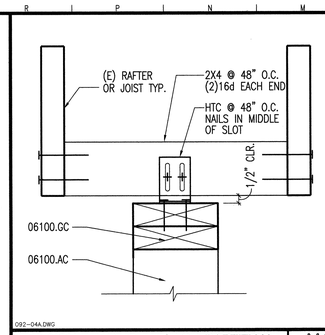

TYP. NON BEARING INTERIOR PARTITION — M4 — 3" = 1'-0"
PARALLEL TO JOISTS

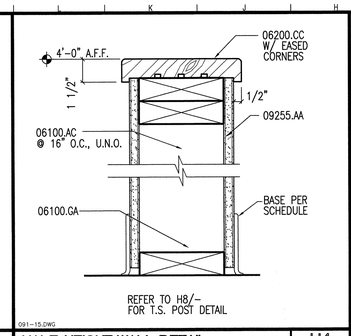

HALF-HEIGHT WALL DETAIL — H4 — 3" = 1'-0"

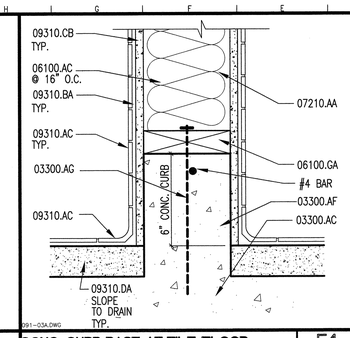

CONC. CURB BASE AT TILE FLOOR — E4 — 3" = 1'-0"

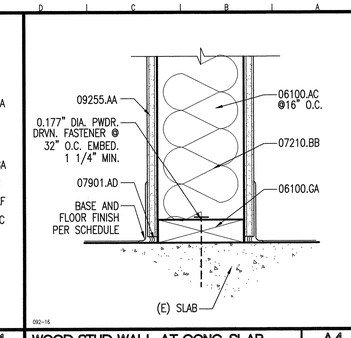

WOOD STUD WALL AT CONC. SLAB — A4 — 3"=1'-0"
WALL TYPE

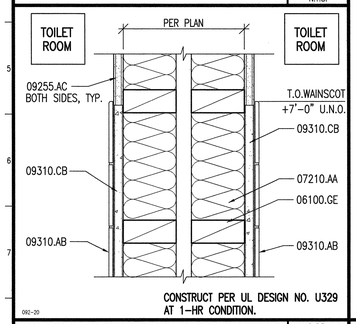

WALL DETAIL — V8 — 3"=1'-0"

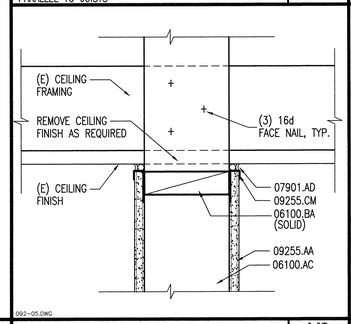

WALL AT EXISTING CEILING — M8 — 3" = 1'-0"

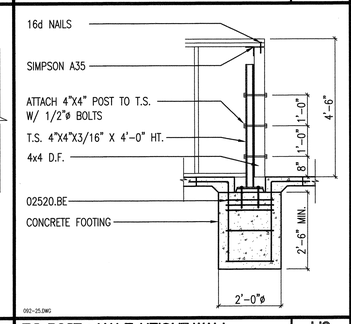

T.S. POST • HALF-HEIGHT WALL — H8 — 1/2"=1'-0"

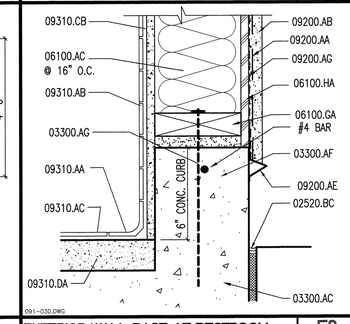

EXTERIOR WALL BASE AT RESTROOM — E8 — 3" = 1'-0"

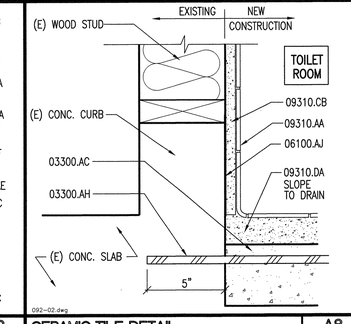

CERAMIC TILE DETAIL — A8 — 3" = 1'-0"

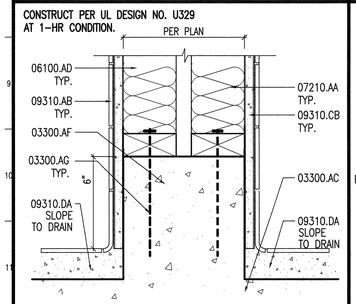

CERAMIC TILE CURB DETAIL — V12 — 3"=1'-0"

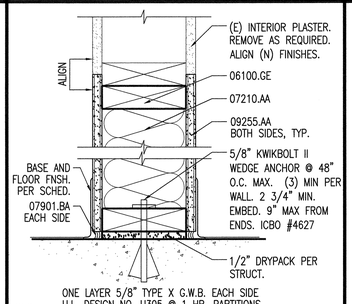

1-HR. RATED WALL — R12 — 3"=1'-0"

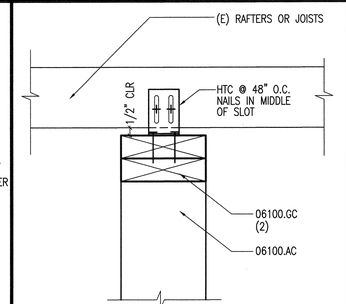

TYP. NON BEARING INTERIOR PARTITION — M12 — 3" = 1'-0"
PERPENDICULAR TO JOIST

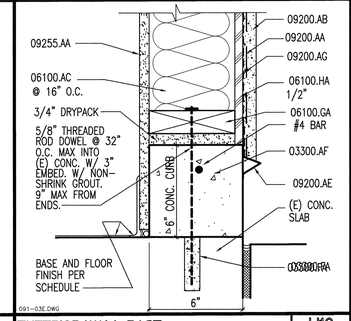

EXTERIOR WALL BASE — H12 — 3" = 1'-0"

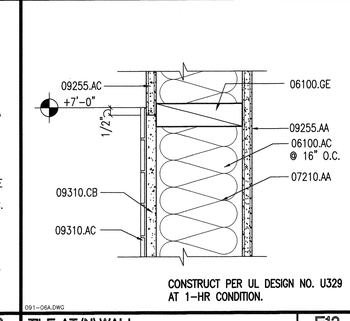

TILE AT (N) WALL — E12 — 3" = 1'-0"

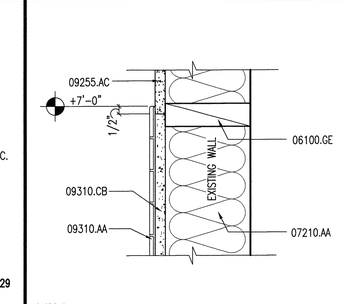

TILE AT (E) WALL — A12 — 3" = 1'-0"

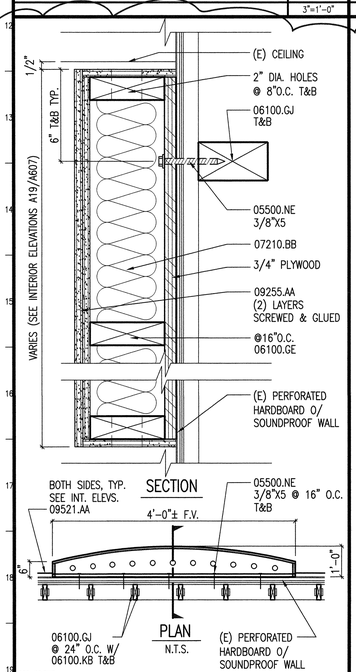

SOUND REFLECTOR PANEL — V19 — 3" = 1'-0"

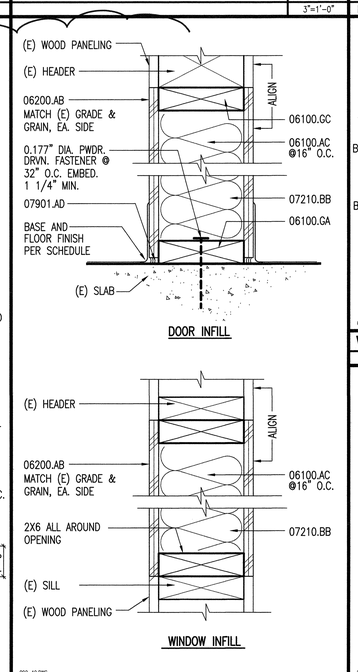

DOOR & WINDOW INFILL DETAIL — R19 — 3"=1'-0"

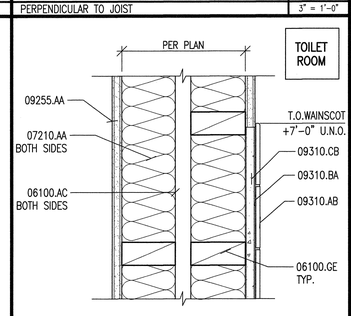

WALL DETAIL — M16 — 3"=1'-0"

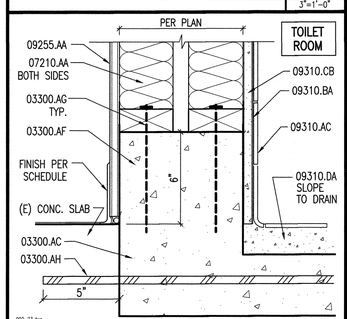

CERAMIC TILE CURB DETAIL — M19 — 3"=1'-0"

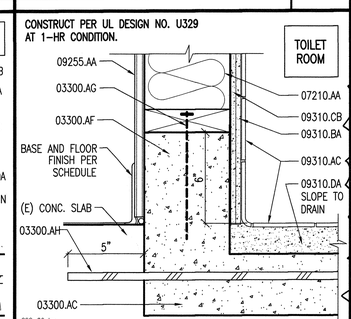

(N) WALL BASE DETAIL — H19 — 3" = 1'-0"

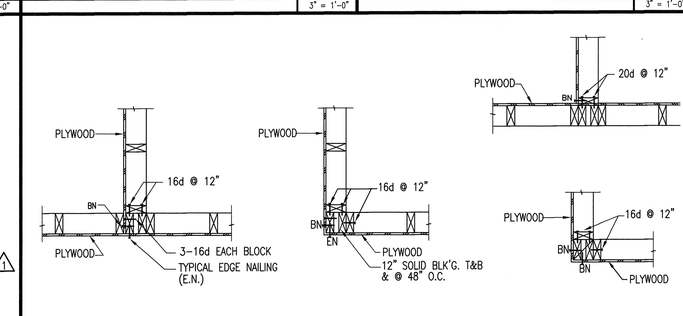

TYPICAL STUD WALL CORNERS — A16 — 1" = 1'-0"

KING STUD SCHEDULE *	
OPNG. SIZE	# OF KING STUD
UP TO 6'-0"	2
6'-1" TO 10'-0"	3
10'-1" TO 14'-0"	4

NOTES:
1. HEADERS SCHEDULED ARE FOR 2x4 STUD WALL FOR LARGER STUD SIZES LINTELS SHALL BE SAME THICKNESS AS STUD WIDTH.
2. DOUBLE TOP ℄PLICE SHALL BE 4'-0" MIN. W/ 6-16d NAILS EA. SIDE OF BUTT JOINT IN TOP PLATE.
3. INSTALL 1x6 LET IN BRACES @ 25'-0" O.C. MAX. IN ALL UNSHEATHED STUD WALLS.
4. AT BUILT-UP LINTELS USE BLKG. @ 2'-0" O.C. W/ 2-16d EA. SIDE TO BUILT-UP LINTEL TO WIDTH OF FRAME WALL.
5. INTERNAL KING STUDS W/ 16d @ 24" O.C.
6. SEE NAILING SCHEDULE FOR ALL OTHER COND.

HEADER SCHEDULE *	
HEADER	SPAN
6x6	UP TO 6'-0"
6x8	6'-1" TO 8'-0"
6x10	8'-1" TO 10'-0"

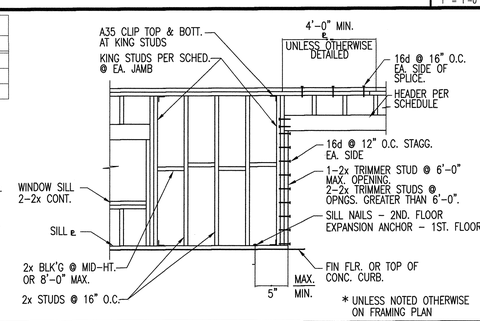

TYPICAL STUD WALL FRAMING — A19 — 1" = 1'-0"

KEYNOTES

KEYNOTES REFERENCE SPECIFICATION SECTIONS BY MEANS OF A FIVE-DIGIT NUMBER IDENTIFYING THE SECTION WHERE A MORE COMPLETE DESCRIPTION OF THE ITEM INDICATED WILL BE FOUND. THE LETTER SUFFIX OF THE KEYNOTE DOES NOT RELATE TO ANY CORRESPONDING REFERENCE LETTER IN THE SPECIFICATION. KEYNOTES DO NOT DESCRIBE CONSTRUCTION MEANS, METHODS, TECHNIQUES, SEQUENCES, OR PROCEDURES. NO TRADE JURISDICTIONAL ALLOCATION OF THIS WORK IS INTENDED BY THE SUBDIVISION OF THESE KEYNOTES. IT SHALL BE THE CONTRACTOR'S SOLE RESPONSIBILITY TO SUBDIVIDE THE WORK IN THE MANNER HE DEEMS NECESSARY.

DIVISION 2 - SITEWORK
02520.BC EXPANSION JOINT FILLER
02520.BE REINFORCING BARS - SEE STRUCTURAL

DIVISION 3 - CONCRETE
03300.AC CONCRETE SLAB - 4" THICK W/ #4 @ 24" O.C. EA. WAY
03300.AF CONCRETE CURB
03300.AG ANCHOR BOLT
03300.AH #4X 24" DOWEL TO (E) CONC. SLAB W/ EPOXY @24" O.C.
03300.FA NON-SHRINK GROUT

DIVISION 5 - METALS
05120.AB STEEL COLUMN
05400.CD HILTI #DN 32 P08 SHOT PIN PER ICBO #2388 W/ 1" MIN. EMBED AT 24" O.C. MAX.
05500.NE LAG BOLT
05810.AD WALL EXPANSION JOINT COVER

DIVISION 6 - WOOD & PLASTICS
06100.AC 2X6 WOOD STUD
06100.AD 2X4 WOOD STUD
06100.AJ CONSTRUCTION ADHESIVE
06100.BA WOOD BEAM
06100.CA WOOD STUD
06100.GA P.T.D.F. SILL PLATE
06100.GC TOP PLATE
06100.GE 2X BLOCKING
06100.GJ 3X BLOCKING
06100.HA PLYWOOD SHEATHING
06100.KB SIMPSON A35 CLIP
06200.AB PLYWOOD PANELING
06200.CC WOOD CAP

DIVISION 7 - THERMAL & MOISTURE PROTECTION
07210.AA R-11 (3-1/2") THERMAL INSULATION
07210.BB 3-1/2" (R-11) ACOUSTICAL INSULATION
07901.AD SEALANT W/ BACKER ROD
07901.BA ACOUSTICAL SEALANT

DIVISION 9 - FINISHES
09200.AA LATH
09200.AB EXTERIOR PLASTER
09200.AE FOUNDATION WEEP SCREED
09200.AG BUILDING PAPER
09255.AA 5/8" TYPE "X" GYPSUM BOARD
09255.AC 5/8" WATER RESISTANT GYPSUM BOARD
09255.CM J-MOLD
09310.AA CERAMIC TILE BASE
09310.AB CERAMIC TILE WAINSCOT
09310.AC CERAMIC TILE
09310.BA THIN SET ADHESIVE
09310.CB 5/8" CEMENTITIOUS BACKER BOARD
09310.DA MORTAR BED
09521.AA ACOUSTICAL WALL PANEL

KEY PLAN

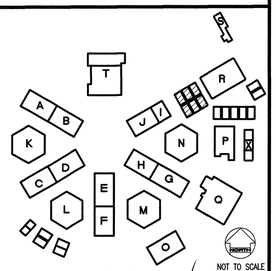

REVISED MAY 12 2004

IDENTIFICATION STAMP
DIV. OF THE STATE ARCHITECT
OFFICE OF REGULATION SERVICES
FILE NO. 19-H51
APPL. NO. 03-106434
AC. FLS. NLC SS.
DATE

Dougherty + Dougherty
Architecture • Planning • Interior Design
3194-D Airport Loop Drive
Costa Mesa, CA 92626
(714) 427-0277

Copyright © 2002 Dougherty + Dougherty

LICENSED ARCHITECT — STATE OF CALIFORNIA — C-28254 — DATE OF ORIGINAL EXPIRATION

Consultant Seal

LA MIRADA HIGH SCHOOL
MODERNIZATION
NORWALK - LA MIRADA UNIFIED SCHOOL DISTRICT
13520 ADELFA DRIVE LA MIRADA, CA 90638

DETAILS

Date:	04-01-04
Job:	20237.50
Scale:	AS NOTED
Drawn:	
Revisions:	
1	12-01-03

A501 1

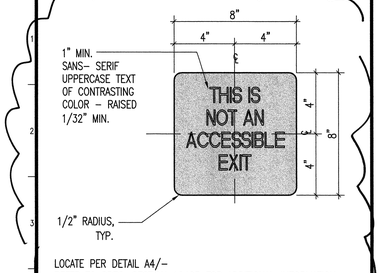

LOCATE PER DETAIL A4/–
REFER TO SPEC. SECTION 10425 FOR ADDITIONAL INFORMATION
FOR ADDITIONAL TEXT & BRAILLE NOTES SEE DETAIL M4/–

104–13.DWG

NON-ACCESSIBILE EXIT SIGNAGE — V4

3"=1'–0"

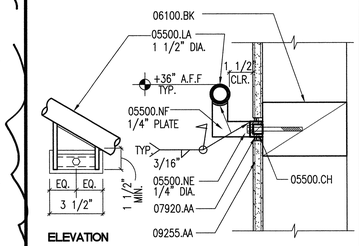

055–05.DWG

HANDRAIL DETAILS — R4

3" = 1'–0"

TEXT:
LETTERS AND NUMBERS SHALL HAVE A WIDTH TO HEIGHT RATIO BETWEEN 3:5 AND 1:1 AND A STROKE WIDTH TO HEIGHT RATIO BETWEEN 1:5 AND 1:10. LETTERS AND NUMBERS ON SIGNS SHALL BE RAISED 1/32" MINIMUM AND SHALL BE SANS–SERIF UPPERCASE CHARACTERS ACCOMPANIED BY GRADE 2 BRAILLE. RAISED CHARACTERS OR SYMBOLS SHALL BE A MINIMUM OF 5/8" HIGH AND A MAXIMUM OF 2" HIGH. THE MINIMUM AND MAXIMUM HEIGHT IS MEASURED USING AN UPPERCASE X. VERIFY TEXT WITH DOOR SCHEDULE.

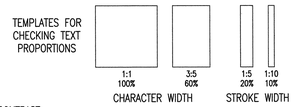

CONTRAST:
CHARACTERS, SYMBOLS AND PICTOGRAMS SHALL CONTRAST WITH THEIR BACKGROUND, EITHER LIGHT CHARACTERS, SYMBOLS AND PICTOGRAMS ON A DARK BACKGROUND OR DARK CHARACTERS, SYMBOLS AND PICTOGRAMS ON A LIGHT BACKGROUND. A CONTRAST BETWEEN THE COLOR OF THE BACKGROUND AND THE COLOR OF THE CHARACTERS, SYMBOLS AND PICTOGRAMS OF AT LEAST 70% BASED ON THE LIGHT REFLECTANCE VALUE IS RECOMMENDED. A CONTRAST BETWEEN THE BACKGROUND COLOR OF THE DOOR MOUNTED TOILET ROOM SIGN AND THE COLOR OF THE DOOR OF AT LEAST 70% BASED ON THE LIGHT REFLECTANCE VALUE IS RECOMMENDED.

FINISH:
CHARACTERS, SYMBOLS, PICTOGRAMS AND THEIR BACKGROUNDS SHALL HAVE A NON–GLARE FINISH, SUCH AS MATTE, SATIN OR EGGSHELL.

BRAILLE SYMBOLS:
CONTRACTED GRADE 2 BRAILLE SHALL BE USED WHEREVER BRAILLE SYMBOLS ARE REQUIRED BY EITHER THE CALIFORNIA BUILDING CODE OR THE AMERICANS WITH DISABILITIES ACT ACCESSIBILITY GUIDELINES. BRAILLE SHALL BE LOCATED A MINIMUM OF 1/2" FROM TACTILE CHARACTERS. BRAILLE DOTS SHALL BE 1/10" ON CENTERS IN EACH CELL WITH 2/10" SPACE BETWEEN CELLS, MEASURED FROM THE SECOND COLUMN OF DOTS IN THE FIRST CELL TO THE FIRST COLUMN OF DOTS IN THE SECOND CELL. BRAILLE DOTS SHALL BE RAISED 1/40" MIN. ABOVE THE BACKGROUND, W/ ROUNDED OR EASED EDGES.

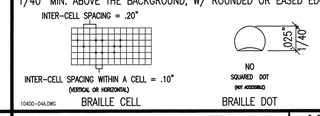

10400–04A.DWG

TEXT & BRAILLE SYMBOL NOTES — M8

N.T.S.

NOTES:
SIGNS SHALL BE INSTALLED CENTERED ON THE DOOR.
MOUNTING HEIGHT SHALL BE 60" ABOVE THE FINISH FLOOR TO THE CENTERLINE OF THE SIGN. THE COLOR AND CONTRAST OF THE SIGN SHALL BE DISTINCTLY DIFFERENT FROM THE COLOR AND CONTRAST OF THE DOOR.

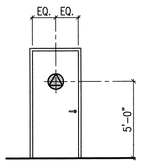

104–02.DWG

DOOR MOUNTED SIGNAGE LOCATION — H4

N.T.S.

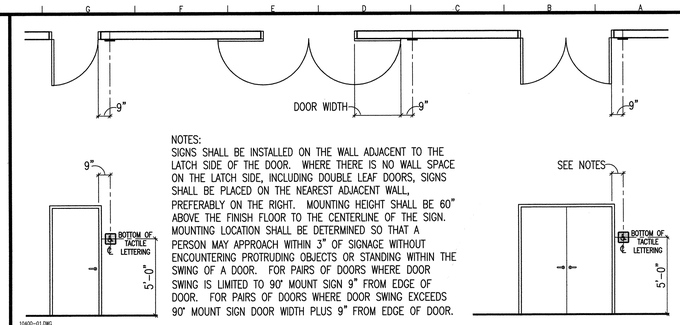

NOTES:
SIGNS SHALL BE INSTALLED ON THE WALL ADJACENT TO THE LATCH SIDE OF THE DOOR. WHERE THERE IS NO WALL SPACE ON THE LATCH SIDE, INCLUDING DOUBLE LEAF DOORS, SIGNS SHALL BE PLACED ON THE NEAREST ADJACENT WALL, PREFERABLY ON THE RIGHT. MOUNTING HEIGHT SHALL BE 60" ABOVE THE FINISH FLOOR TO THE CENTERLINE OF THE SIGN. MOUNTING LOCATION SHALL BE DETERMINED SO THAT A PERSON MAY APPROACH WITHIN 3" OF SIGNAGE WITHOUT ENCOUNTERING PROTRUDING OBJECTS OR STANDING WITHIN THE SWING OF A DOOR. FOR PAIRS OF DOORS WHERE DOOR SWING IS LIMITED TO 90° MOUNT SIGN 9" FROM EDGE OF DOOR. FOR PAIRS OF DOORS WHERE DOOR SWING EXCEEDS 90° MOUNT SIGN DOOR WIDTH PLUS 9" FROM EDGE OF DOOR.

10400–01.DWG

WALL MOUNTED SIGNAGE LOCATION — A4

N.T.S.

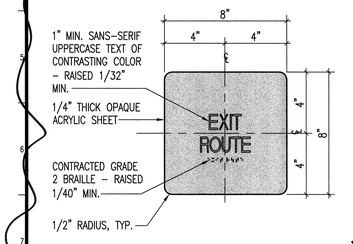

LOCATE PER DETAIL A4/–
REFER TO SPEC. SECTION 10425 FOR ADDITIONAL INFORMATION
FOR ADDITIONAL TEXT & BRAILLE NOTES SEE DETAIL M4/–

104–13A.DWG

EXIT ROUTE SIGNAGE — V8

3"=1'–0"

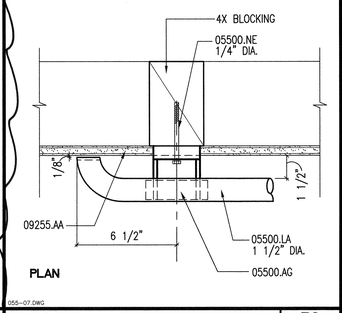

055–07.DWG

HANDRAIL RETURN — R8

3" = 1'–0"

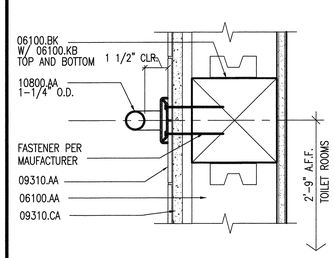

108–01.DWG

TEXT & BRAILLE SYMBOL NOTES — M8

N.T.S.

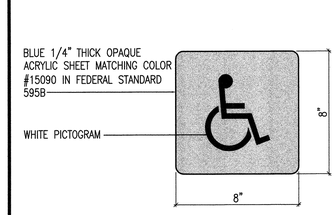

LOCATE PER DETAIL A4/–
REFER TO SPEC. SECTION 10425 FOR ADDITIONAL INFORMATION
PROVIDE SIGN AT ALL ACCESSIBLE ENTRANCE DOORS U.N.O.
FOR PICTOGRAM STANDARDS SEE DETAIL A8/–
FOR ADDITIONAL TEXT & BRAILLE NOTES SEE DETAIL M8/–

10400–05.DWG

ACCESSIBLE ENTRANCE SIGNAGE — H8

3"=1'–0"

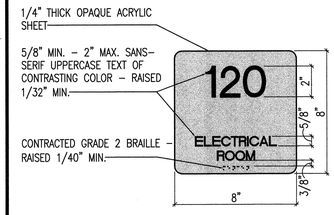

LOCATE PER DETAIL A4/–
REFER TO SPEC. SECTION 10425 FOR ADDITIONAL INFORMATION
PROVIDE SIGN AT ALL DOORS U.N.O.

FOR ADDITIONAL TEXT & BRAILLE NOTES SEE DETAIL M8/–

ROOM IDENTIFICATION SIGNAGE — E8

3"=1'–0"

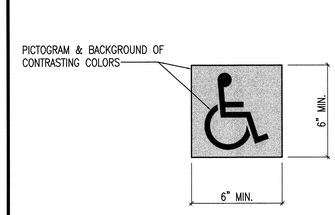

U.N.O. PICTOGRAMS (PICTORIAL SYMBOL SIGNS) SHALL BE ACCOMPANIED BY THE EQUIVALENT VERBAL DESCRIPTION PLACED DIRECTLY BELOW THE PICTOGRAM. THE BORDER DIMENSION OF THE PICTOGRAM SHALL BE A MINIMUM OF 6" IN HEIGHT.

104–03.DWG

ISA – PICTOGRAM STANDARDS — A8

3"=1'–0"

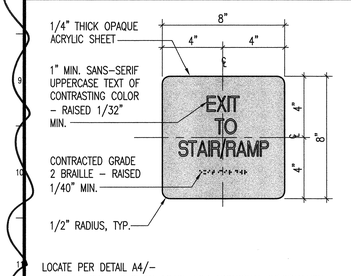

LOCATE PER DETAIL A4/–
REFER TO SPEC. SECTION 10425 FOR ADDITIONAL INFORMATION
FOR ADDITIONAL TEXT & BRAILLE NOTES SEE DETAIL M4/–

104–13B.DWG

EXIT TO STAIR/RAMP SIGNAGE — V12

3"=1'–0"

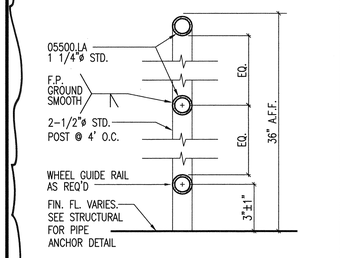

055–05

HANDRAIL • RAISED FLOOR — R12

3"=1'–0"

108–01.DWG

GRAB BAR • WOOD STUD WALL — M12

3"=1'–0"

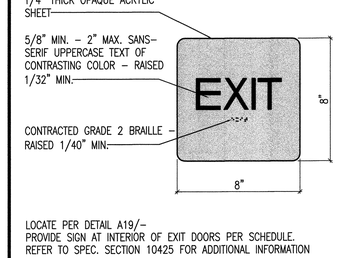

LOCATE PER DETAIL A4/–
REFER TO SPEC. SECTION 10425 FOR ADDITIONAL INFORMATION
FOR ADDITIONAL TEXT & BRAILLE NOTES SEE DETAIL M8/–

104–14.DWG

EXIT SIGNAGE — H12

3"=1'–0"

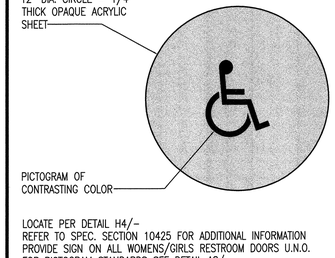

LOCATE PER DETAIL H4/–
REFER TO SPEC. SECTION 10425 FOR ADDITIONAL INFORMATION
PROVIDE SIGN ON ALL MENS/BOYS RESTROOM DOORS U.N.O.
FOR PICTOGRAM STANDARDS SEE DETAIL A8/–
SIGN COLOR SHALL DISTINCTLY CONTRAST WITH DOOR COLOR

104–11.DWG

DOOR MOUNTED RESTOOM SIGNAGE — E12

3"=1'–0"

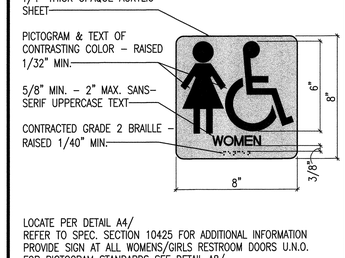

LOCATE PER DETAIL A4/–
REFER TO SPEC. SECTION 10425 FOR ADDITIONAL INFORMATION
PROVIDE SIGN AT ALL MENS/BOYS RESTROOM DOORS U.N.O.
FOR PICTOGRAM STANDARDS SEE DETAIL A8/–
FOR ADDITIONAL TEXT & BRAILLE NOTES SEE DETAIL M8/–

104–09F.DWG

WALL MOUNTED RESTROOM SIGNAGE — A12

3"=1'–0"

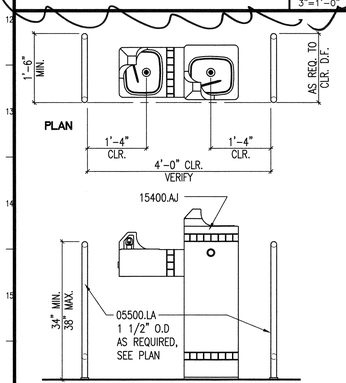

154–05B.DWG

DRINKING FOUNTAIN — V19

3/4" = 1'–0"

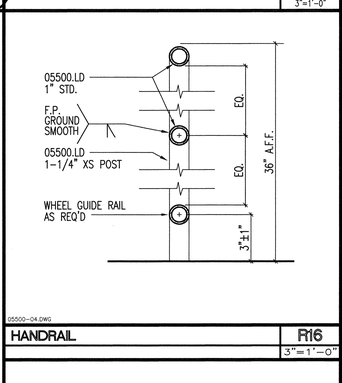

055–04.DWG

HANDRAIL — R16

3"=1'–0"

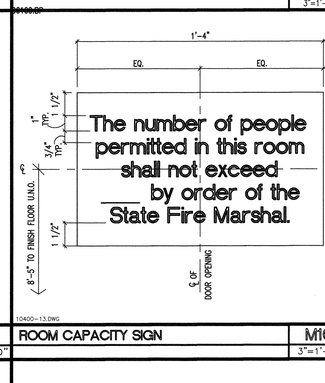

10400–13.DWG

ROOM CAPACITY SIGN — M16

3"=1'–0"

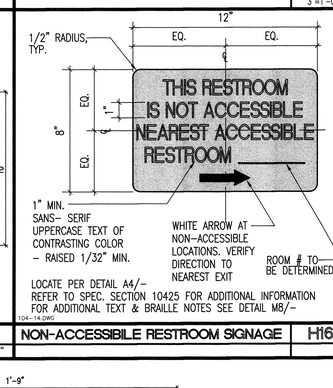

LOCATE PER DETAIL A4/–
REFER TO SPEC. SECTION 10425 FOR ADDITIONAL INFORMATION
FOR ADDITIONAL TEXT & BRAILLE NOTES SEE DETAIL M8/–

104–14.DWG

NON-ACCESSIBILE RESTROOM SIGNAGE — H16

3"=1'–0"

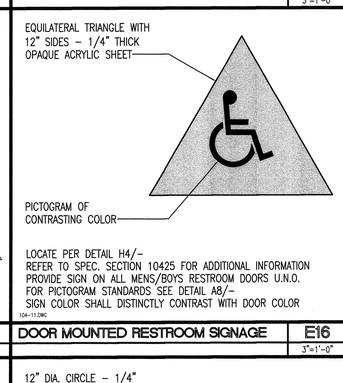

LOCATE PER DETAIL H4/–
REFER TO SPEC. SECTION 10425 FOR ADDITIONAL INFORMATION
PROVIDE SIGN ON ALL UNISEX RESTROOM DOORS U.N.O.
FOR PICTOGRAM STANDARDS SEE DETAIL A8/–
SIGN COLOR SHALL DISTINCTLY CONTRAST WITH DOOR COLOR

10400–12.DWG

DOOR MOUNTED RESTROOM SIGNAGE — E16

3"=1'–0"

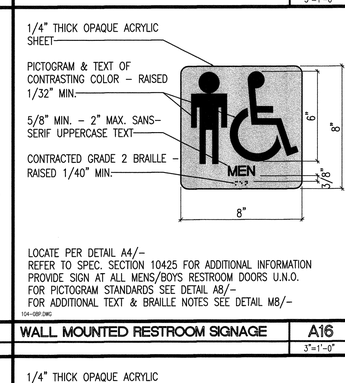

LOCATE PER DETAIL A4/–
REFER TO SPEC. SECTION 10425 FOR ADDITIONAL INFORMATION
PROVIDE SIGN AT ALL UNISEX RESTROOM DOORS U.N.O.
FOR PICTOGRAM STANDARDS SEE DETAIL A8/–
FOR ADDITIONAL TEXT & BRAILLE NOTES SEE DETAIL M8/–

10400–09.DWG

WALL MOUNTED RESTROOM SIGNAGE — A16

3"=1'–0"

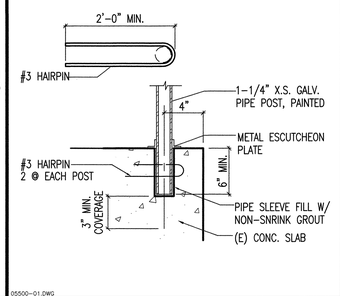

055–01.DWG

PIPE ANCHOR DETAIL — R19

1 1/2"=1'–0"

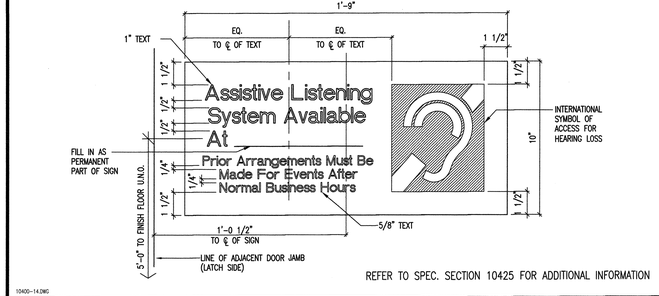

REFER TO SPEC. SECTION 10425 FOR ADDITIONAL INFORMATION

10400–14.DWG

ASSISTIVE LISTENING SYSTEM SIGN — H19

3"=1'–0"

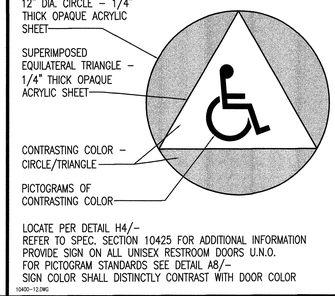

LOCATE PER DETAIL H4/–
REFER TO SPEC. SECTION 10425 FOR ADDITIONAL INFORMATION
PROVIDE SIGN ON ALL UNISEX RESTROOM DOORS U.N.O.
FOR PICTOGRAM STANDARDS SEE DETAIL A8/–
SIGN COLOR SHALL DISTINCTLY CONTRAST WITH DOOR COLOR

10400–12.DWG

DOOR MOUNTED RESTROOM SIGNAGE — E19

3"=1'–0"

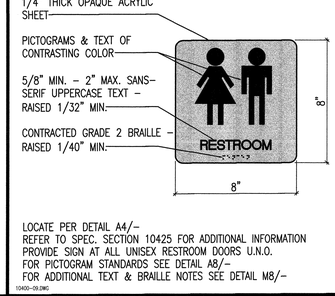

LOCATE PER DETAIL A4/–
REFER TO SPEC. SECTION 10425 FOR ADDITIONAL INFORMATION
PROVIDE SIGN AT ALL UNISEX RESTROOM DOORS U.N.O.
FOR PICTOGRAM STANDARDS SEE DETAIL A8/–
FOR ADDITIONAL TEXT & BRAILLE NOTES SEE DETAIL M8/–

10400–09.DWG

WALL MOUNTED RESTROOM SIGNAGE — A19

3"=1'–0"

KEYNOTES

KEYNOTES REFERENCE SPECIFICATION SECTIONS BY MEANS OF A FIVE–DIGIT NUMBER IDENTIFYING THE SECTION WHERE A MORE COMPLETE DESCRIPTION OF THE ITEM INDICATED WILL BE FOUND. THE LETTER SUFFIX OF THE KEYNOTE DOES NOT RELATE TO ANY CORRESPONDING REFERENCE LETTER IN THE SPECIFICATION. KEYNOTES DO NOT DESCRIBE CONSTRUCTION MEANS, METHODS, TECHNIQUES, SEQUENCES, OR PROCEDURES. NO TRADE JURISDICTIONAL ALLOCATION OF THIS WORK IS INTENDED BY THE SUBDIVISION OF THESE KEYNOTES. IT SHALL BE THE CONTRACTOR'S SOLE RESPONSIBILITY TO SUBDIVIDE THE WORK IN THE MANNER HE DEEMS NECESSARY.

DIVISION 5 – METALS

05500.AG 4"X1/4" THICK CURVED STEEL SUPPORT
05500.CH STEEL CHANNEL
05500.LA PIPE HANDRAIL
05500.LB PIPE SLEEVE W/ PLUG
05500.LD PIPE GUARDRAIL
05500.NE LAG BOLT
05500.NF STEEL PLATE

DIVISION 6 – WOOD & PLASTICS

06100.AA WOOD POST
06100.BK 4X BLOCKING
06100.GF 4X BLOCKING
06100.KB SIMPSON A35 CLIP

DIVISION 7 – THERMAL & MOISTURE PROTECTION

07920.AA SEALANT

DIVISION 9 – FINISHES

09255.AA 5/8" TYPE "X" GYPSUM BOARD
09310.AA CERAMIC TILE BASE
09310.CA 5/8" TYPE "X" GYPSUM BOARD

DIVISION 10 – SPECIALTIES

10800.AA GRAB BAR

DIVISION 15 – MECHANICAL

15400.AJ ACCESSIBLE HI–LO DRINKING FOUNTAIN – SEE PLUMBING

NOTE:
ALL SYMBOL & LETTER COLORS SHALL CONFORM TO BLUE COLOR EQUAL TO COLOR #15090 – FEDERAL STANDARD 595 ON WHITE CONTRASTING BACKGROUND. DEVIATIONS FOR INTERIOR SIGN COLORS SHALL BE APPROVED BY DSA PRIOR TO INSTALLATION.

KEY PLAN

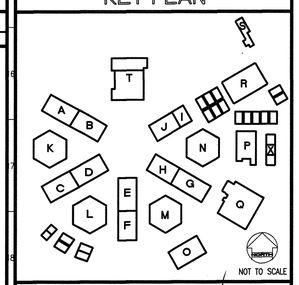

REVISED MAY 12 2004

IDENTIFICATION STAMP
DIV. OF THE STATE ARCHITECT
OFFICE OF REGULATION SERVICES
FILE NO. 19–H51
APPL. NO. 03–106434
AC. FLS. SS.
DATE

Dougherty ■ Dougherty
Architecture • Planning • Interior Design
3536-D Airport Loop Drive
Costa Mesa, CA 92626
(714) 427-0277

Copyright © 2002 Dougherty + Dougherty

Consultant Seal

Architect Seal

LA MIRADA HIGH SCHOOL
MODERNIZATION
NORWALK - LA MIRADA UNIFIED SCHOOL DISTRICT
13520 ADELFA DRIVE LA MIRADA, CA 90638

DETAILS

Date:	04–01–04
Job:	20237.50
Scale:	AS NOTED
Drawn:	
Revisions:	

A502

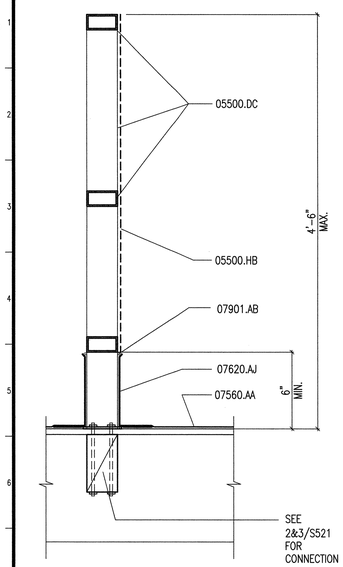

055-02.DWG

MECHANICAL SCREEN | V8 | 1-1/2"=1'-0"

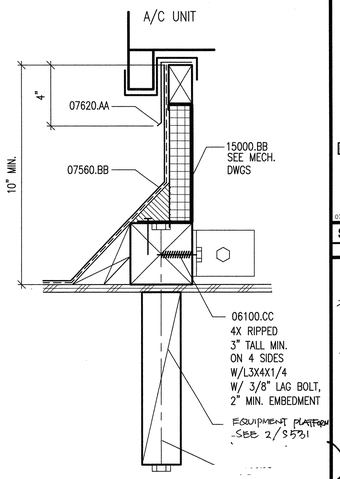

077-11.DWG

MECH. PLATFORM • BLDG. "N" | R8 | 3"=1'-0"

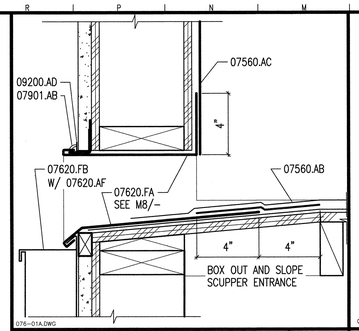

076-01A.DWG

SCUPPER & DOWNSPOUT DETAIL | M4 | 3" = 1'-0"

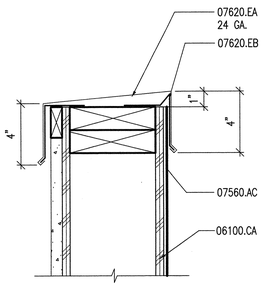

073-08.DWG

COPING • PARAPET | H4 | 3"=1'-0"

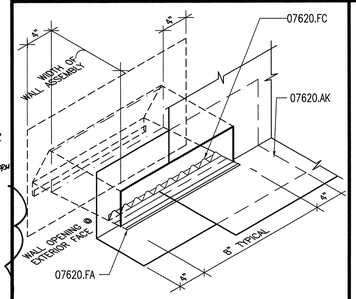

076-03.DWG

SCUPPER THROUGH PARAPET-ISO. | M8 | N.T.S.

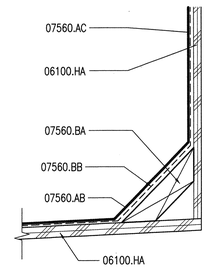

070-09.DWG

ROOFING DETAIL | H8 | 3" = 1'-0"

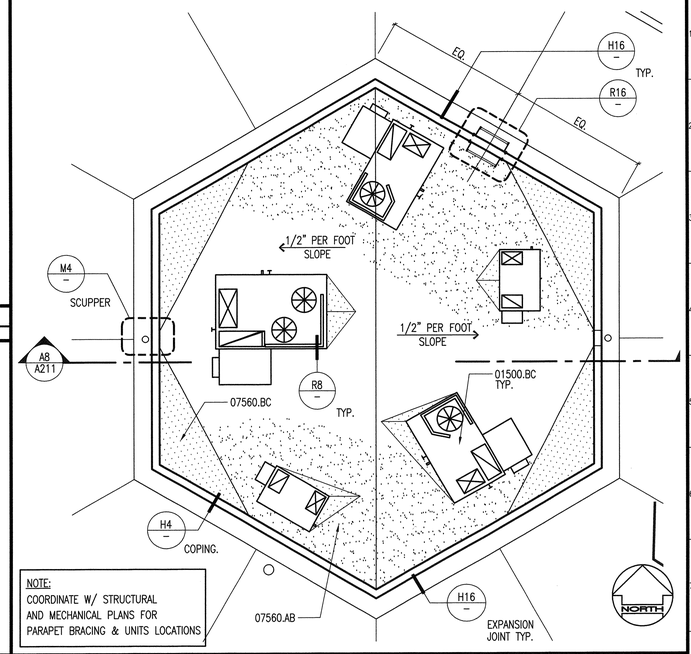

NOTE:
COORDINATE W/ STRUCTURAL AND MECHANICAL PLANS FOR PARAPET BRACING & UNITS LOCATIONS

ENLARGED ROOF PLAN | A8 | 1/4"=1'-0"
LIBRARY BUILDING , BUILDING N

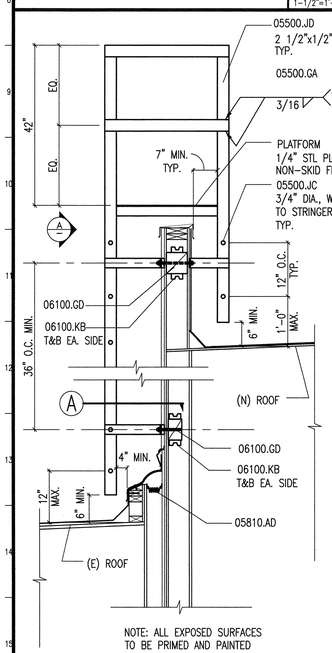

NOTE: ALL EXPOSED SURFACES TO BE PRIMED AND PAINTED

077-05B.DWG

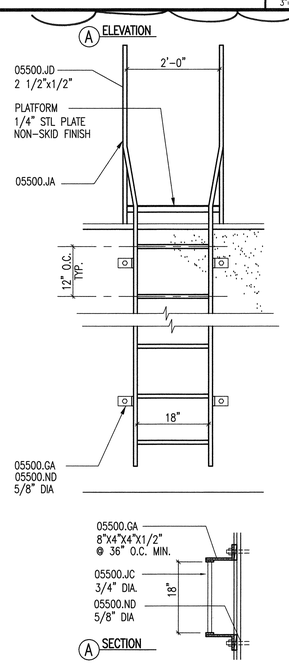

LADDER • PARAPET | R16 | 3/4"=1'-0"

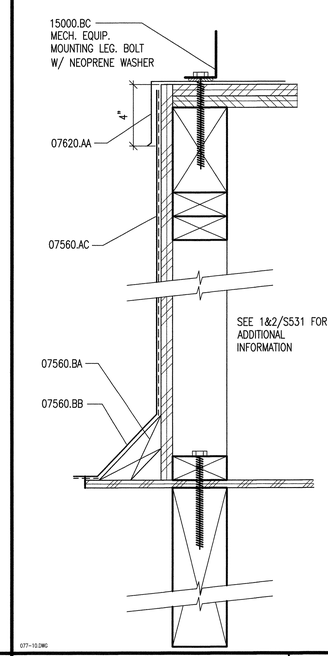

077-10.DWG

CONDENSING UNIT PLATFORM | M16 | 3"=1'-0"

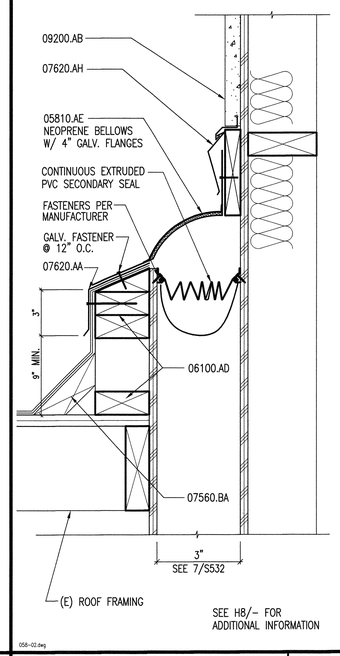

058-02.dwg

ROOF EXPANSION JOINT DETAIL | H16 | 3"=1'-0"

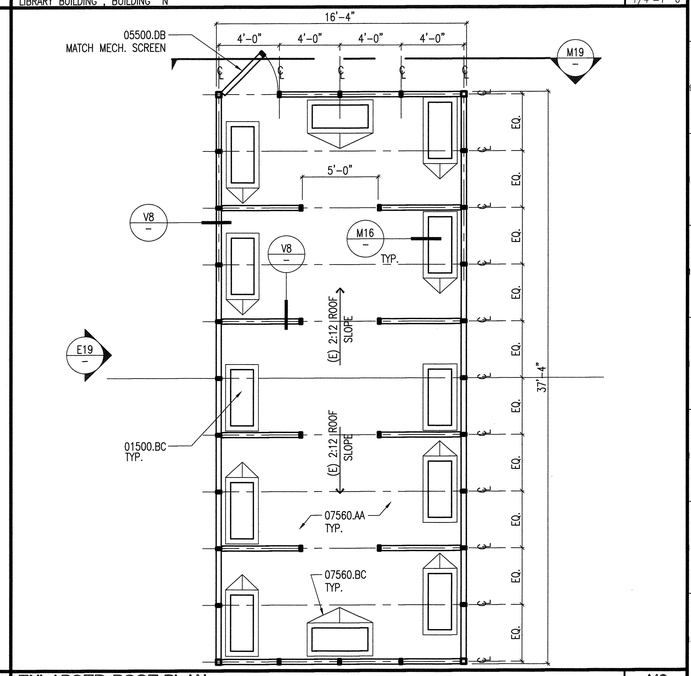

ENLARGED ROOF PLAN | A16 | 1/4"=1'-0"
BUILDINGS, A-B, C-D, E-F, G-H & J-I

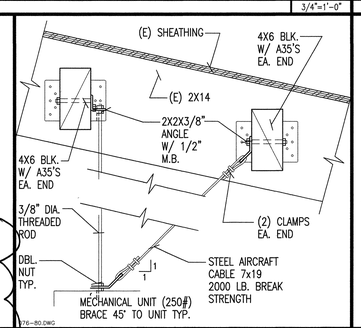

076-80.DWG

SUSPENDED MECH. UNIT | R19 | 1-1/2" = 1'-0"

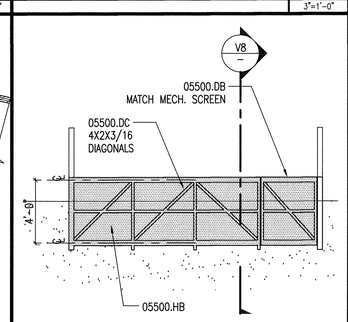

MECHANICAL SCREEN | M19
BUILDINGS, A-B, C-D, E-F, G-H & J-I

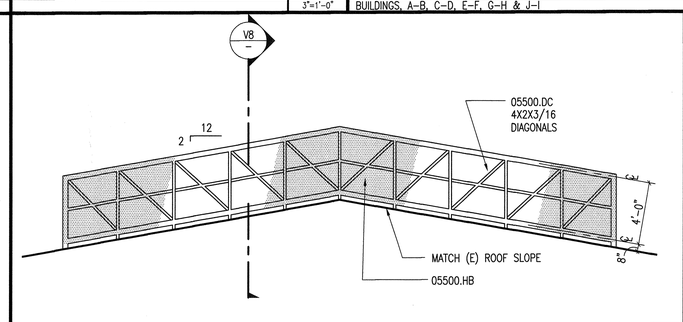

MECHANICAL SCREEN | E19 | 1/4"=1'-0"
BUILDINGS, A-B, C-D, E-F, G-H & J-I

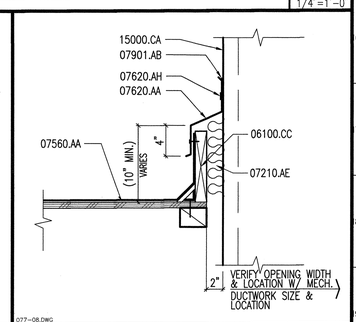

077-08.DWG

DUCT THRU ROOF | A19 | 1 1/2" = 1'-0"

KEYNOTES

KEYNOTES REFERENCE SPECIFICATION SECTIONS BY MEANS OF A FIVE-DIGIT NUMBER IDENTIFYING THE SECTION WHERE A MORE COMPLETE DESCRIPTION OF THE ITEM INDICATED WILL BE FOUND. THE LETTER SUFFIX OF THE KEYNOTE DOES NOT RELATE TO ANY CORRESPONDING REFERENCE LETTER IN THE SPECIFICATION. KEYNOTES DO NOT DESCRIBE CONSTRUCTION MEANS, METHODS, TECHNIQUES, SEQUENCES, OR PROCEDURES. NO TRADE JURISDICTIONAL ALLOCATION OF THIS WORK IS INTENDED BY THE SUBDIVISION OF THESE KEYNOTES. IT SHALL BE THE CONTRACTOR'S SOLE RESPONSIBILITY TO SUBDIVIDE THE WORK IN THE MANNER HE DEEMS NECESSARY.

DIVISION 5 - METALS

05500.DB METAL GATE
05500.DC TUBE STEEL
05500.GA MOUNTING BRACKET
05500.HB PERFORATED METAL SCREEN
05500.JA METAL LADDER
05500.JC PIPE RUNGS
05500.JD PLATE STRINGER
05500.ND THRU BOLT
05810.AD WALL EXPANSION JOINT COVER
05810.AE ROOF EXPANSION JOINT

DIVISION 6 - WOOD & PLASTICS

06100.AD 2X4 WOOD STUD
06100.CA WOOD STUD
06100.CC WOOD CURB
06100.GD BLOCKING
06100.HA PLYWOOD SHEATHING
06100.JC MACHINE BOLT
06100.KB SIMPSON A35 CLIP

DIVISION 7 - THERMAL & MOISTURE PROTECTION

07210.AE INSULATION
07560.AA PATCH AND REPAIR (E) ROOFING
07560.AB MODIFIED BITUMEN ROOFING
07560.AC MODIFIED BITUMEN ROOFING WALL COVERING
07560.BA CANT STRIP
07560.BB BASE FLASHING
07560.BC MODIFIED BITUMEN ROOFING O/ PLYWOOD CRICKET
07620.AA GALVANIZED SHEET METAL FLASHING
07620.AF GALV. METAL DOWNSPOUT
07620.AH GALV. SHEET METAL COUNTERFLASHING FOR PLASTER WALLS
07620.AJ TWO-PIECE LEAD FLASHING
07620.AK GALV. SHEET METAL BASE FLASHING
07620.EA GALV. SHEET METAL COPING
07620.EB GALV. SHEET METAL CLIP
07620.FA SCUPPER
07620.FB CONDUCTOR/HEAD
07620.FC GRAVEL STOP
07901.AB SEALANT

DIVISION 9 - FINISHES

09200.AB EXTERIOR PLASTER
09200.AD METAL CASING BEAD

DIVISION 15 - MECHANICAL

15000.BB PREFAB. MECH. CURB PER MANUFACTURER
15000.BC MECH. UNIT - SEE MECH. DWGS
15000.CA DUCTWORK

ROOF NOTES

1) PROVIDE (N) METAL EDGE FLASING, EXPANSION FLASHING, PIPE AND CONDUIT PENETRATION FLASHING, MECHANICAL UNIT CURB FLASHING, RELIEF AIR VENTS AND FLASHING.

2) REFER TO MECHANICAL, PLUMBING AND ELECTRICAL DRAWINGS FOR ADDITIONAL INFORMATION.

3) PAINT METAL COVER WALKWAYS & CANOPIES. PAINT ALL EXPOSED SURFACES INCLUDING BUT NOT LIMITED TO: STEEL PIPE COLUMNS, BEAMS, UNDERSIDE OF METAL ROOFS, METAL FLASHINGS FACIAS...
REFER TO SEC. # 0990

ROOF LEGEND

SBS MODIFIED BITUMEN ROOFING
SEE SPECIFICATIONS SECTION 07560

SBS MODIFIED BITUMEN ROOFING
OVER PLYWOOD CRICKETS
OVER TAPERED 2X SLEEPERS
OVER PLYWOOD SHEATHING

KEY PLAN

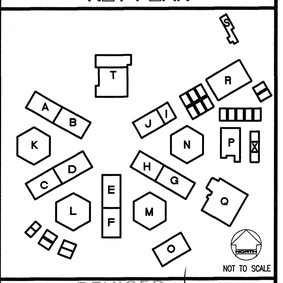

NOT TO SCALE

REVISED MAY 1 2 2004

IDENTIFICATION STAMP
DIV. OF THE STATE ARCHITECT
OFFICE OF REGULATION SERVICES
FILE NO. 19-H51
APPL. NO. 03-106434
ACCESS FLS. SS.
DATE

Dougherty + Dougherty
Architecture • Planning • Interior Design
3184-D Airport Loop Drive
Costa Mesa, CA 92626
(714) 427-0277

Copyright © 2002 Dougherty + Dougherty

REGISTERED PROFESSIONAL ENGINEER
C-8604
STATE OF CALIFORNIA

Architect Seal

Consultant Seal

LA MIRADA HIGH SCHOOL MODERNIZATION
NORWALK - LA MIRADA UNIFIED SCHOOL DISTRICT
13520 ADELFA DRIVE LA MIRADA, CA 90638

ENLARGED ROOF PLANS & DETAILS

Date:	04-01-04
Job:	20237.50
Scale:	AS NOTED
Drawn:	
Revisions:	

A503

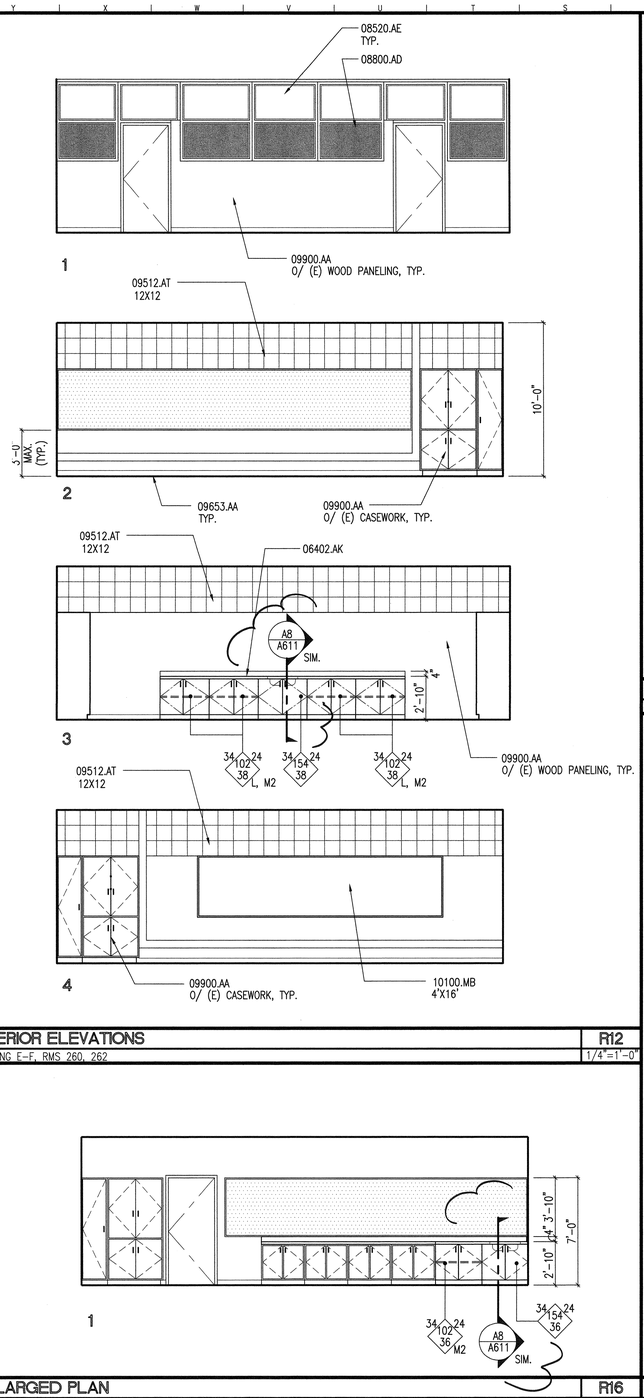

INTERIOR ELEVATIONS

BUILDING E-F, RMS 260, 262

R12

1/4"=1'-0"

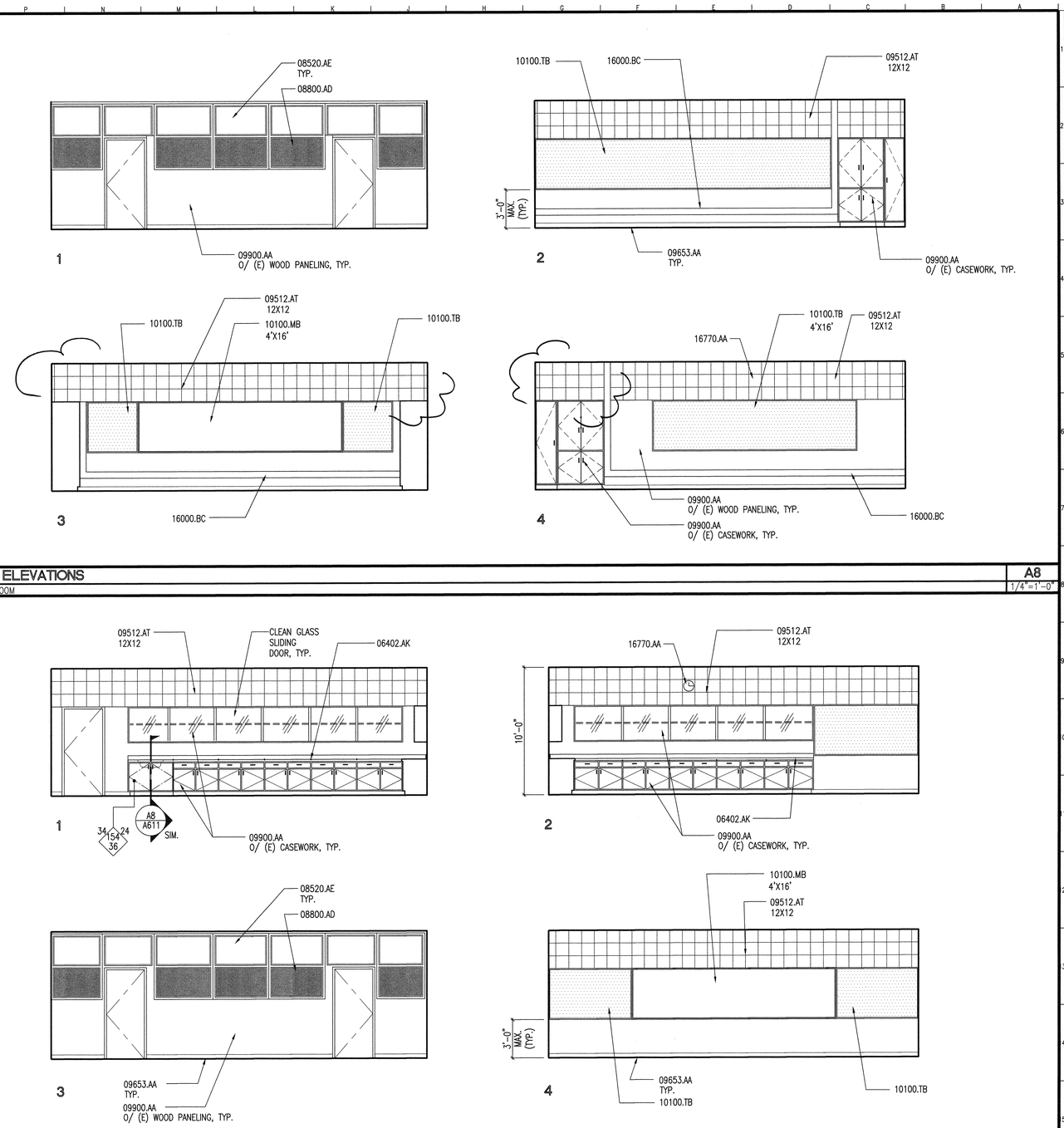

INTERIOR ELEVATIONS

TYPICAL CLASSROOM

A8

1/4"=1'-0"

ENLARGED PLAN

CLASSROOM 160, 162, AND 163

R16

1/4"=1'-0"

INTERIOR ELEVATIONS

BUILDING E-F, RM 275

A16

1/4"=1'-0"

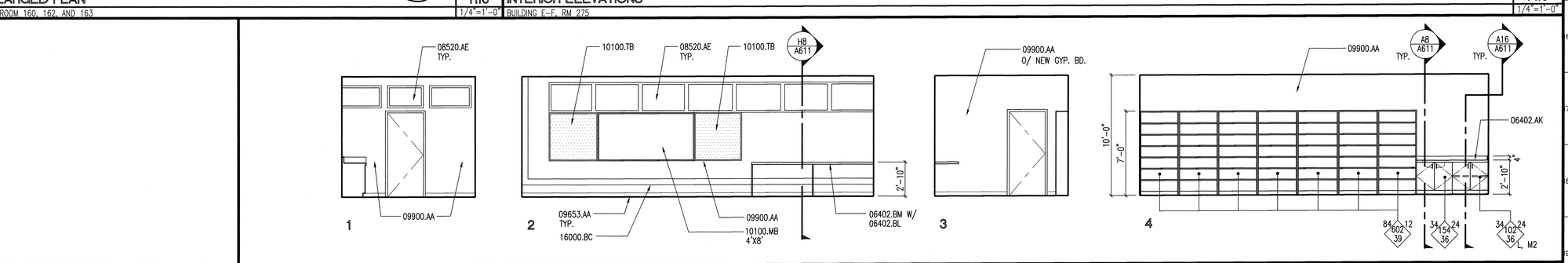

INTERIOR ELEVATIONS

BUILDING E-F, RM 258

A19

1/4"=1'-0"

KEYNOTES

KEYNOTES REFERENCE SPECIFICATION SECTIONS BY MEANS OF A FIVE-DIGIT NUMBER IDENTIFYING THE SECTION WHERE A MORE COMPLETE DESCRIPTION OF THE ITEM INDICATED WILL BE FOUND. THE LETTER SUFFIX OF THE KEYNOTE DOES NOT RELATE TO ANY CORRESPONDING REFERENCE LETTER IN THE SPECIFICATION. KEYNOTES DO NOT DESCRIBE CONSTRUCTION MEANS, METHODS, TECHNIQUES, SEQUENCES, OR PROCEDURES. NO TRADE JURISDICTIONAL ALLOCATION OF THIS WORK IS INTENDED BY THE SUBDIVISION OF THESE KEYNOTES. IT SHALL BE THE CONTRACTOR'S SOLE RESPONSIBILITY TO SUBDIVIDE THE WORK IN THE MANNER HE DEEMS NECESSARY.

DIVISION 6 - WOOD & PLASTICS

06402.AK PLASTIC LAMINATE COUNTER TOP W/ COVED BACKSPLASH
06402.BL PLASTIC LAMINATE SUPPORT PANEL AT 64" O.C. MAX.
06402.BM PLASTIC LAMINATE COUNTER TOP

DIVISION 8 - DOORS & WINDOWS

08520.AE NEW ALUMINUM WINDOW
08800.AD OBSCURED GLAZING

DIVISION 9 - FINISHES

09512.AT ACOUSTICAL TILES
09653.AA 4" RESILIENT WALL BASE
09900.AA PAINT FINISH

DIVISION 10 - SPECIALTIES

10100.MB MARKERBOARD
10100.TB TACKBOARD

DIVISION 16 - ELECTRICAL

16000.BC SURFACE MOUNTED RACEWAY - SEE ELECTRICAL
16770.AA CLOCK / PUBLIC ADDRESS SYSTEM

CASEWORK SYMBOLS

W.I.C. CASEWORK
See Woodwork Institute of California Manual of Millwork
Provide Standard Sizes U.N.O.

Unit Depth
Unit Height — 24 220 36
WIC Designation — 24 L,M
Unit Length
Lockable
Style Modification

SYMBOL NOTATIONS

L = PROVIDE LOCKS AT ALL DOORS
M1 = NOT USED
M2 = PROVIDE ADJUSTABLE SHELVES
M3 = MODIFY AS SHOWN ON FLOOR PLAN

KEY PLAN

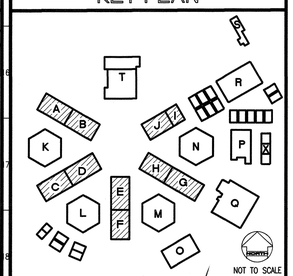

REVISED

IDENTIFICATION STAMP
DIV. OF THE STATE ARCHITECT
OFFICE OF REGULATION SERVICES
FILE NO. 19-H51
APPL. NO. 03-106434
AC. 1 FLS. NCT SS.
DATE
MAY 12 2004

Dougherty + Dougherty
Architecture · Planning · Interior Design
2400 Michelson Drive
Irvine, CA 92612
(714) 427-0277

Copyright © 2002 Dougherty + Dougherty

LICENSED ARCHITECT
JOHN W. DOUGHERTY
C-18624
STATE OF CALIFORNIA
Architect Seal

Consultant Seal

LA MIRADA HIGH SCHOOL
MODERNIZATION
NORWALK - LA MIRADA UNIFIED SCHOOL DISTRICT
13520 ADELFA DRIVE LA MIRADA, CA 90638

INTERIOR ELEVATIONS

Date:	04-01-04
Job:	20237.50
Scale:	AS NOTED
Drawn:	
Revisions:	

A601

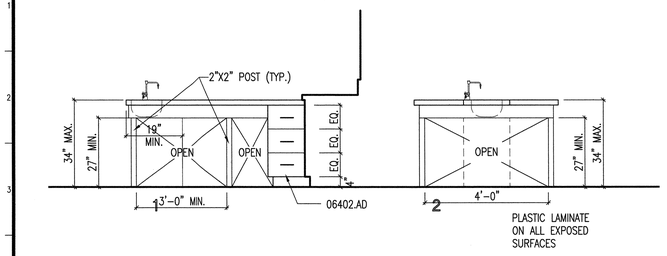

CASEWORK ELEVATION — R4
LAB TABLE — 1/2"=1'-0"

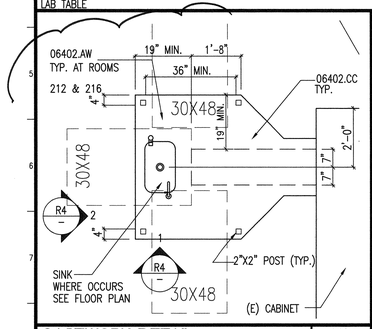

CASEWORK DETAIL — V8
LAB TABLE — 1/2"=1'-0"

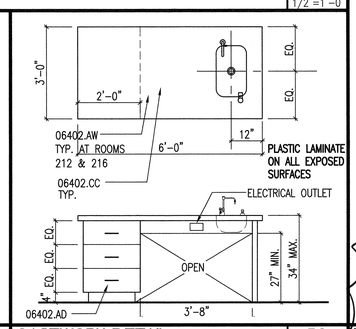

CASEWORK DETAIL — R8
DEMONSTRATION TABLE — 1/2"=1'-0"

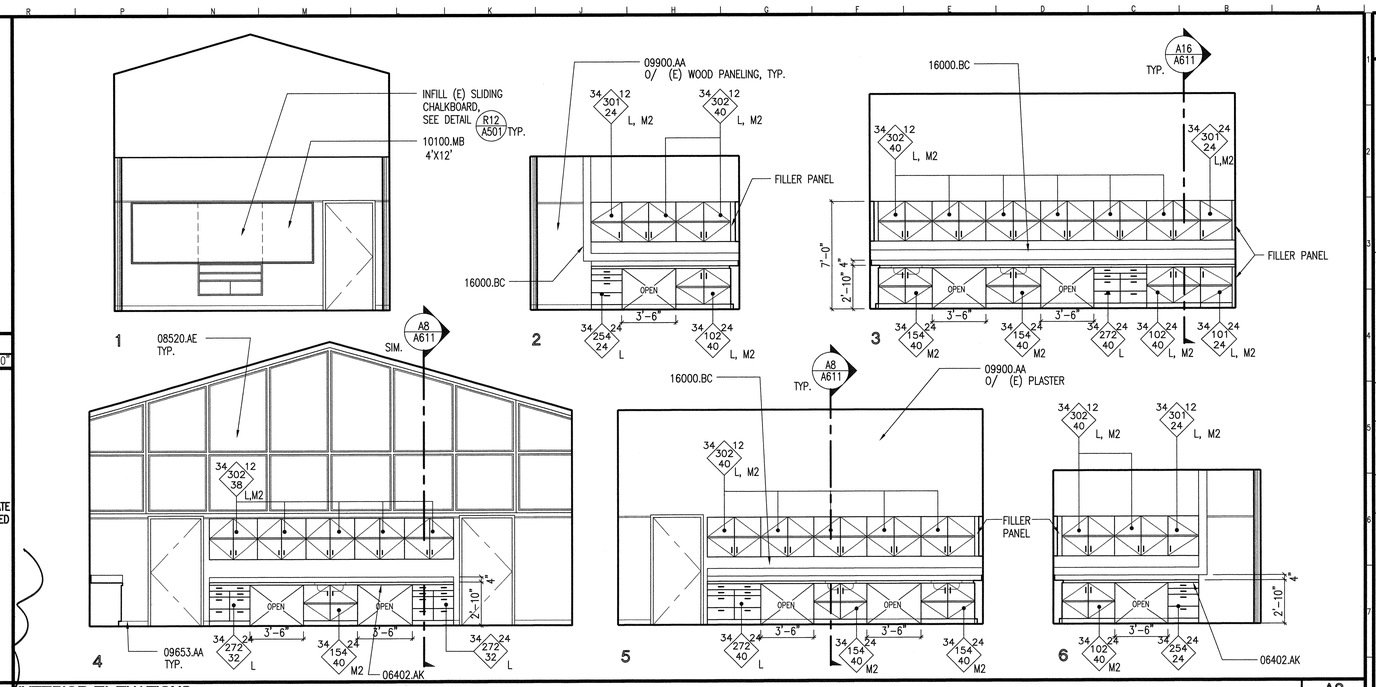

INTERIOR ELEVATIONS — A8
BUILDING L, RMS 210, 214, 218 — 1/4"=1'-0"

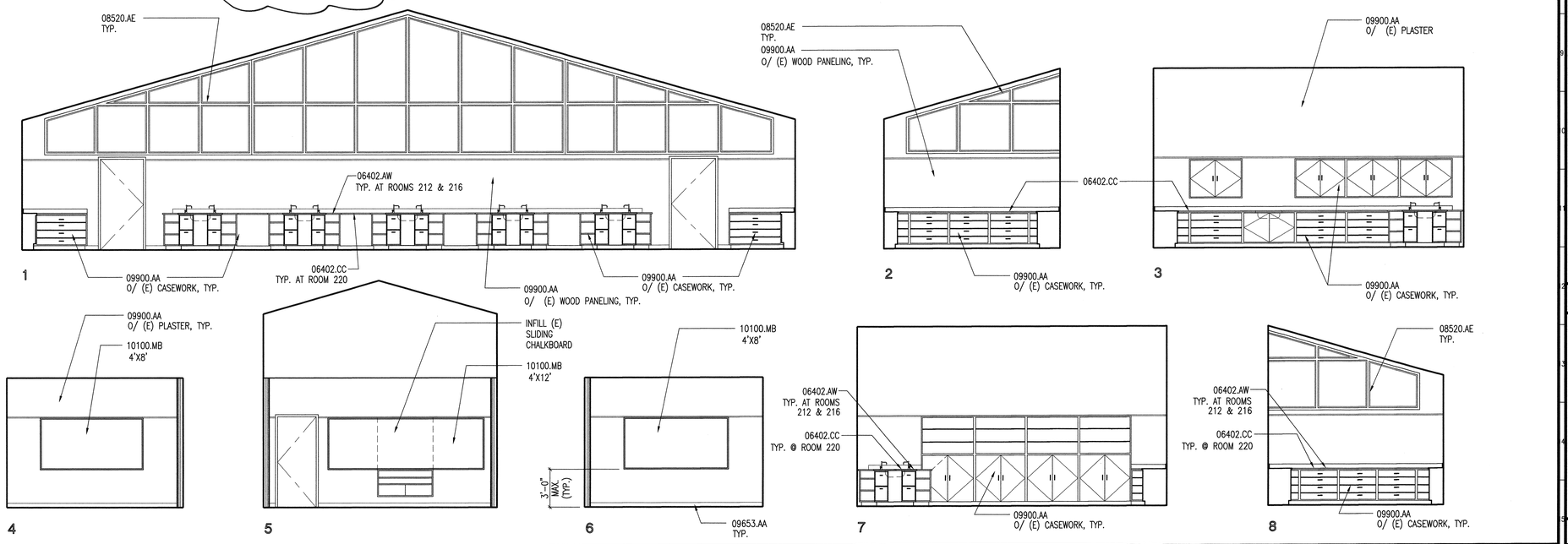

INTERIOR ELEVATIONS — A16
BUILDING L, RMS 212, 216, 220 — 1/4"=1'-0"

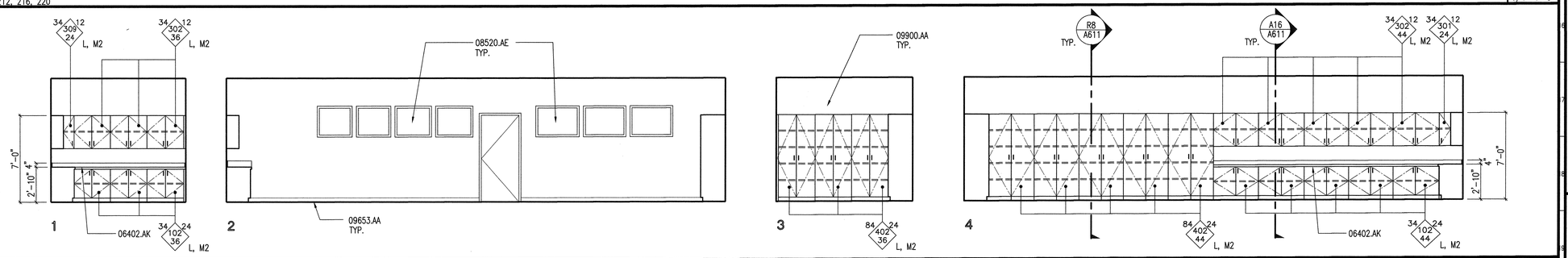

INTERIOR ELEVATIONS — A19
BUILDING G-H, RM 380 — 1/4"=1'-0"

KEYNOTES

KEYNOTES REFERENCE SPECIFICATION SECTIONS BY MEANS OF A FIVE-DIGIT NUMBER IDENTIFYING THE SECTION WHERE A MORE COMPLETE DESCRIPTION OF THE ITEM INDICATED WILL BE FOUND. THE LETTER SUFFIX OF THE KEYNOTE DOES NOT RELATE TO ANY CORRESPONDING REFERENCE LETTER IN THE SPECIFICATION. KEYNOTES DO NOT DESCRIBE CONSTRUCTION MEANS, METHODS, TECHNIQUES, SEQUENCES, OR PROCEDURES. NO TRADE JURISDICTIONAL ALLOCATION OF THIS WORK IS INTENDED BY THE SUBDIVISION OF THESE KEYNOTES. IT SHALL BE THE CONTRACTOR'S SOLE RESPONSIBILITY TO SUBDIVIDE THE WORK IN THE MANNER HE DEEMS NECESSARY.

DIVISION 6 – WOOD & PLASTICS

06402.AD PLASTIC LAMINATE BASE CABINET
06402.AK PLASTIC LAMINATE COUNTER TOP W/ COVED BACKSPLASH
06402.AW CHEMICAL RESISTANT PLASTIC LAMINATE COUNTERTOP
06402.CC EPOXY RESIN COUNTERTOP (W/ INTEGRAL SINK WHERE OCCURS)

DIVISION 8 – DOORS & WINDOWS

08520.AE NEW ALUMINUM WINDOW

DIVISION 9 – FINISHES

09653.AA 4" RESILIENT WALL BASE
09900.AA PAINT FINISH

DIVISION 10 – SPECIALTIES

10100.MB MARKERBOARD

DIVISION 16 – ELECTRICAL

16000.BC SURFACE MOUNTED RACEWAY – SEE ELECTRICAL

CASEWORK SYMBOLS

W.I.C. CASEWORK
See Woodwork Institute of California Manual of Millwork Provide Standard Sizes U.N.O.

Unit Depth
Unit Height
WIC Designation
Unit Length
Lockable
Style Modification

24 36 / 220 / 24 L,M

SYMBOL NOTATIONS
L = PROVIDE LOCKS AT ALL DOORS
M1 = NOT USED
M2 = PROVIDE ADJUSTABLE SHELVES
M3 = MODIFY AS SHOWN ON FLOOR PLAN

KEY PLAN

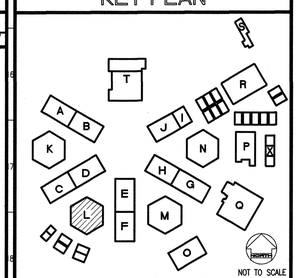

REVISED MAY 12 2004

IDENTIFICATION STAMP
DIV. OF THE STATE ARCHITECT
OFFICE OF REGULATION SERVICES
FILE NO. 19-H51
APPL. NO. 03-106434
AC. FLS. SS.
DATE

Dougherty + Dougherty
Architecture • Planning • Interior Design
2134 Main Street, Suite 200
Irvine, CA 92614
(714) 427-0277

Copyright © 2002 Dougherty + Dougherty

LICENSED ARCHITECT — STATE OF CALIFORNIA — C-29024 — EXP. JUNE 30, 2004

Architect Seal

Consultant Seal

LA MIRADA HIGH SCHOOL
MODERNIZATION
NORWALK - LA MIRADA UNIFIED SCHOOL DISTRICT
13520 ADELFA DRIVE LA MIRADA, CA 90638

INTERIOR ELEVATIONS

Date:	04-01-04
Job:	20237.50
Scale:	AS NOTED
Drawn:	
Revisions:	

A602

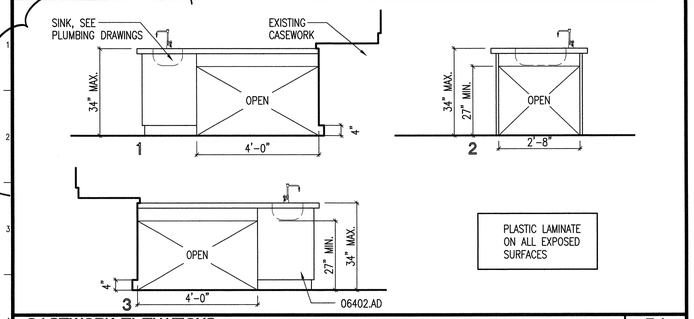

CASEWORK ELEVATIONS — R4

BUILDING E, RM 274 — 1/2"=1'-0"

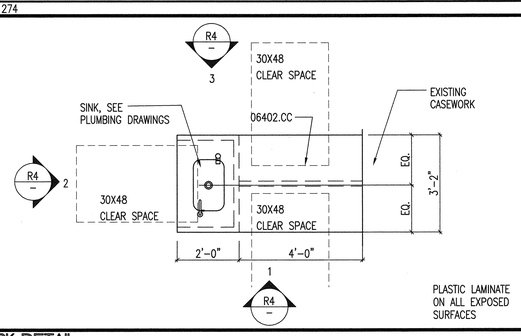

CASEWORK DETAIL — R8

BUILDING E, RM 274 — 1/2"=1'-0"

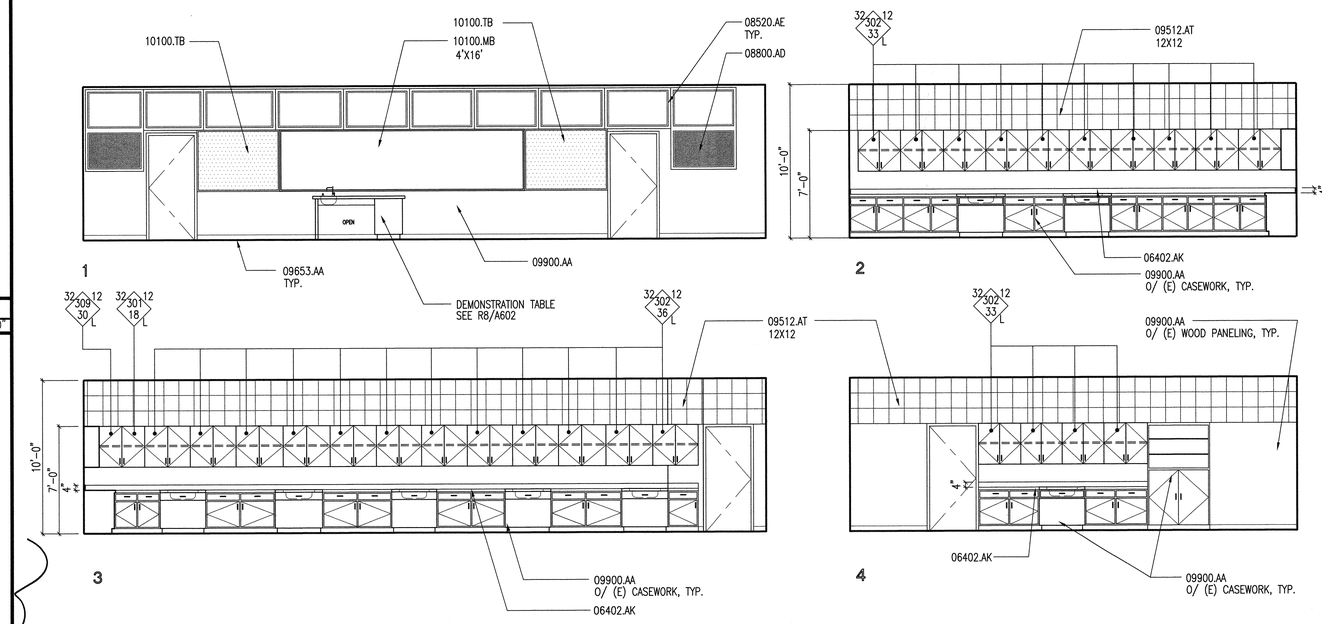

INTERIOR ELEVATIONS — A8

BUILDING E, RM 274 — 1/4"=1'-0"

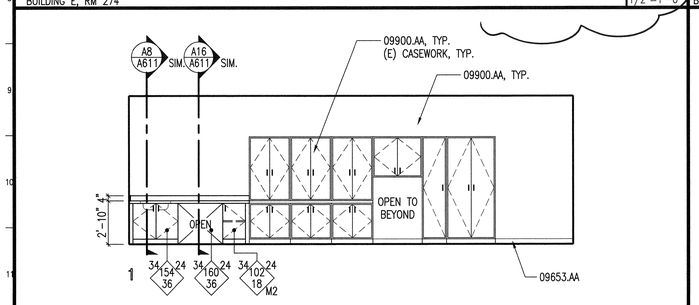

INTERIOR ELEVATIONS — R12

BUILDING G-H, WORKROOM 362 — 1/4"=1'-0"

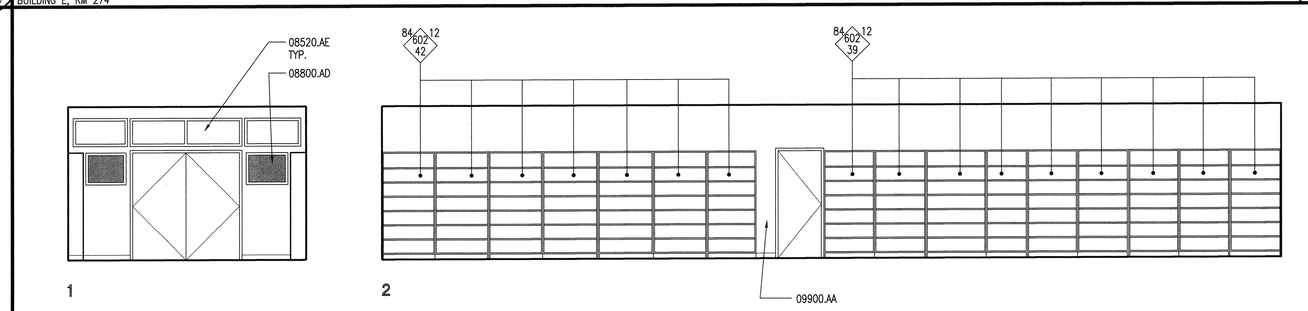

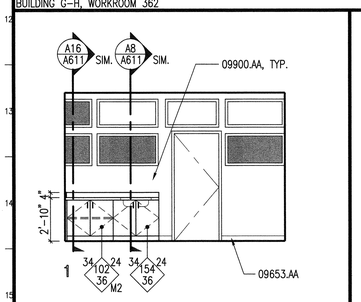

INTERIOR ELEVATIONS — V16

BUILDING E-F, STAFF ROOM 272 — 1/4"=1'-0"

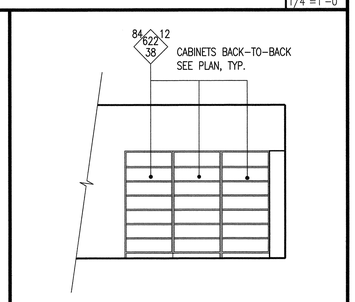

INTERIOR ELEVATIONS — R16

BUILDING J-I, RM 467 — 1/4"=1'-0"

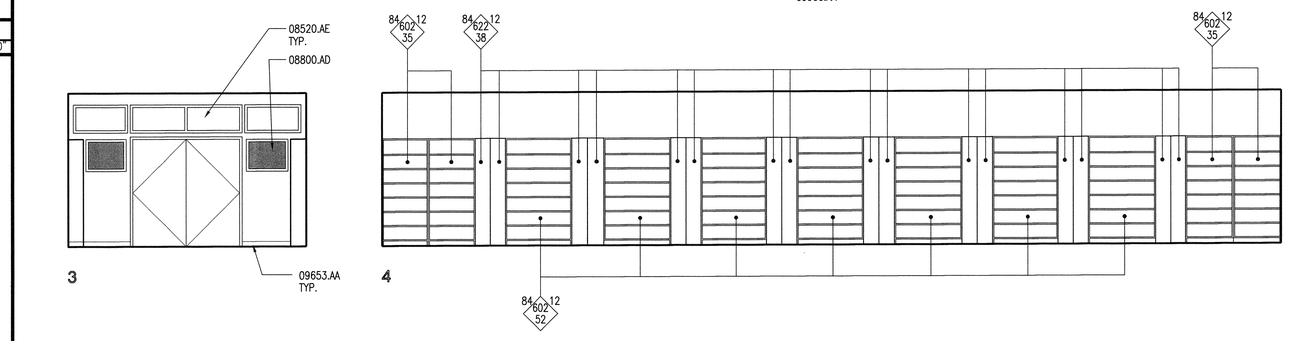

INTERIOR ELEVATIONS — A16

BUILDING J-I, RM 467 — 1/4"=1'-0"

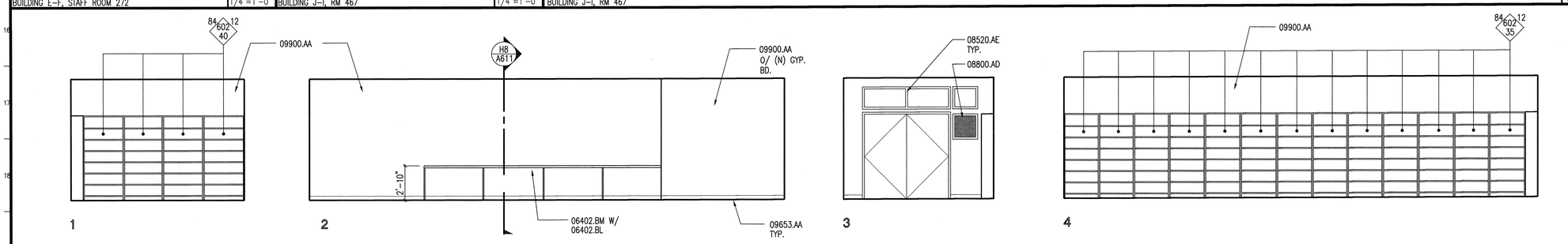

INTERIOR ELEVATIONS — A19

BUILDING A-B, RM 567 — 1/4"=1'-0"

KEYNOTES

KEYNOTES REFERENCE SPECIFICATION SECTIONS BY MEANS OF A FIVE-DIGIT NUMBER IDENTIFYING THE SECTION WHERE A MORE COMPLETE DESCRIPTION OF THE ITEM INDICATED WILL BE FOUND. THE LETTER SUFFIX OF THE KEYNOTE DOES NOT RELATE TO ANY CORRESPONDING REFERENCE LETTER IN THE SPECIFICATION. KEYNOTES DO NOT DESCRIBE CONSTRUCTION MEANS, METHODS, TECHNIQUES, SEQUENCES, OR PROCEDURES. NO TRADE JURISDICTIONAL ALLOCATION OF THIS WORK IS INTENDED BY THE SUBDIVISION OF THESE KEYNOTES. IT SHALL BE THE CONTRACTOR'S SOLE RESPONSIBILITY TO SUBDIVIDE THE WORK IN THE MANNER HE DEEMS NECESSARY.

DIVISION 6 – WOOD & PLASTICS

06402.AD PLASTIC LAMINATE BASE CABINET
06402.AK PLASTIC LAMINATE COUNTER TOP W/ COVED BACKSPLASH
06402.BL PLASTIC LAMINATE SUPPORT PANEL AT 64" O.C. MAX.
06402.BM PLASTIC LAMINATE COUNTER TOP
06402.CC EPOXY RESIN COUNTERTOP (W/ INTEGRAL SINK WHERE OCCURS)

DIVISION 8 – DOORS & WINDOWS

08520.AE NEW ALUMINUM WINDOW
08800.AD OBSCURED GLAZING

DIVISION 9 – FINISHES

09512.AT ACOUSTICAL TILES
09653.AA 4" RESILIENT WALL BASE
09900.AA PAINT FINISH

DIVISION 10 – SPECIALTIES

10100.MB MARKERBOARD
10100.TB TACKBOARD

CASEWORK SYMBOLS

W.I.C. CASEWORK
See Woodwork Institute of California Manual of Millwork
Provide Standard Sizes U.N.O.

Unit Depth
Unit Height
WIC Designation
Unit Length
Lockable
Style Modification

24 / 220 / 24 / 36 / L,M

SYMBOL NOTATIONS
L = PROVIDE LOCKS AT ALL DOORS
M1 = NOT USED
M2 = PROVIDE ADJUSTABLE SHELVES
M3 = MODIFY AS SHOWN ON FLOOR PLAN

KEY PLAN

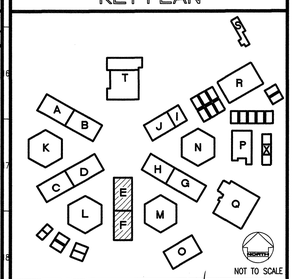

NOT TO SCALE

REVISED

MAY 1 2 2004

IDENTIFICATION STAMP
DIV. OF THE STATE ARCHITECT
OFFICE OF REGULATION SERVICES
FILE NO. 19-H51
APPL. NO. 03-106434
AC. FLS. SS.
DATE

Dougherty + Dougherty
Architecture • Planning • Interior Design
3194-D Airport Loop Drive
Costa Mesa, CA 92626
(714) 427-0277

Copyright © 2002 Dougherty + Dougherty

Consultant Seal

LA MIRADA HIGH SCHOOL MODERNIZATION
NORWALK - LA MIRADA UNIFIED SCHOOL DISTRICT
13520 ADELFA DRIVE LA MIRADA, CA 90638

INTERIOR ELEVATIONS

Date:	04-01-04
Job:	20237.50
Scale:	AS NOTED
Drawn:	
Revisions:	

A603

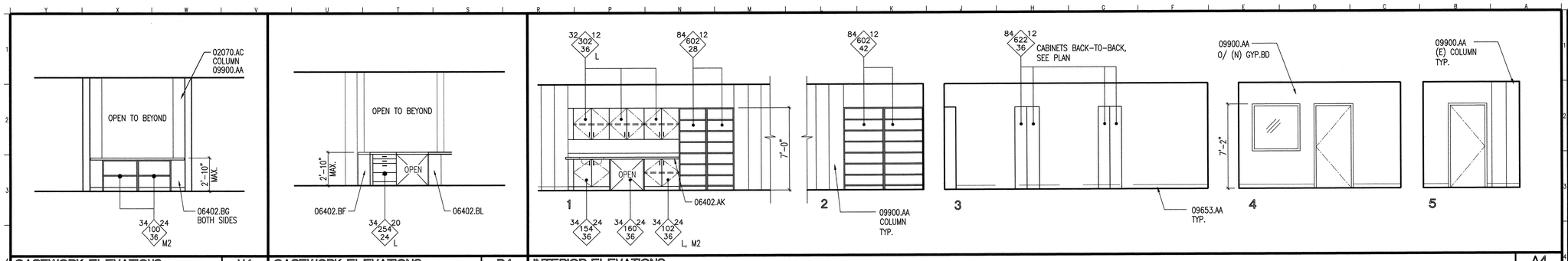

CASEWORK ELEVATIONS	V4	CASEWORK ELEVATIONS	R4	INTERIOR ELEVATIONS	A4
BUILDING L, WORKROOM 213	1/4"=1'-0"	BUILDING L, WORKROOM 213	1/4"=1'-0"	BUILDING N, RM 410A	1/4"=1'-0"

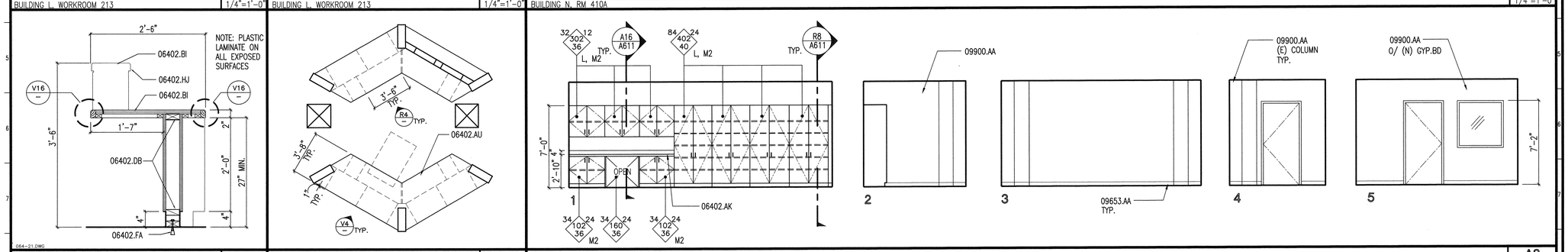

CASEWORK SECTION	V8	ENLARGED PLAN	R8	INTERIOR ELEVATIONS	A8
	1"=1'-0"	BUILDING L, WORKROOM 213	1/4"=1'-0"	BUILDING N, RM 410B	1/4"=1'-0"

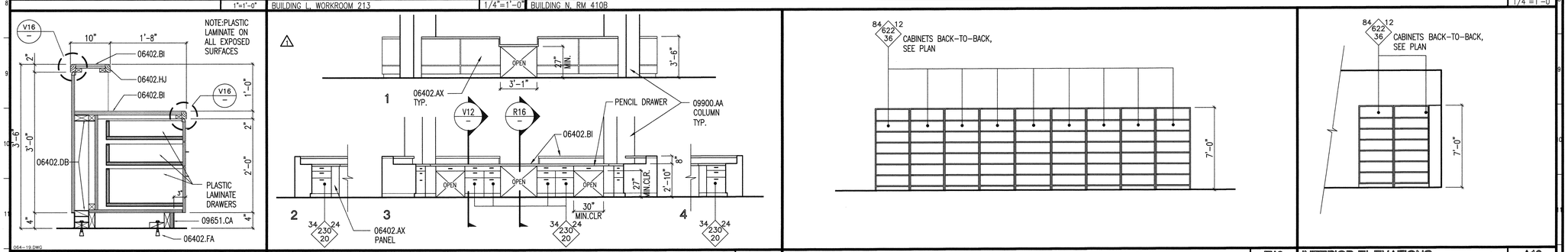

CASEWORK SECTION	V12	CASEWORK ELEVATIONS	M12	INTERIOR ELEVATIONS	E12	INTERIOR ELEVATIONS	A12
	1"=1'-0"	BUILDING N, RM 410	1/4"=1'-0"	BUILDING N, RM 410	1/4"=1'-0"	BUILDING N, RM 410A	1/4"=1'-0"

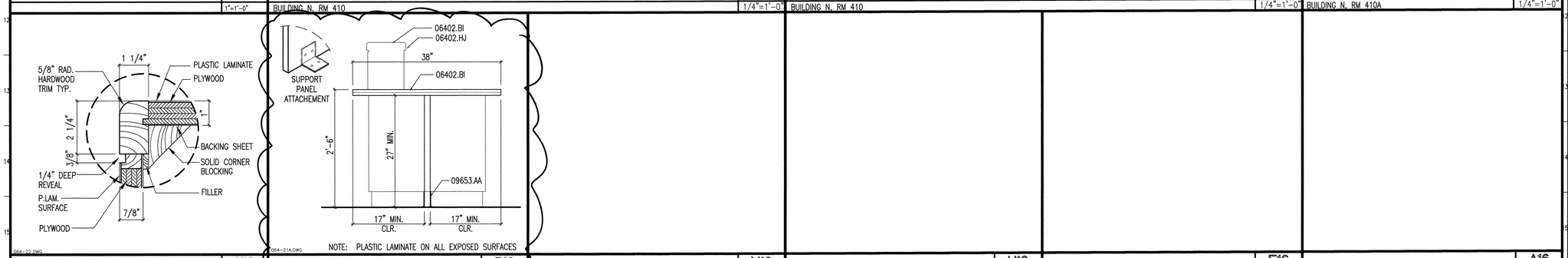

DESK / COUNTER EDGE DETAIL	V16	CASEWORK SECTION	R16	M16	H16	E16	A16
	3" = 1'-0"		1"=1'-0"				

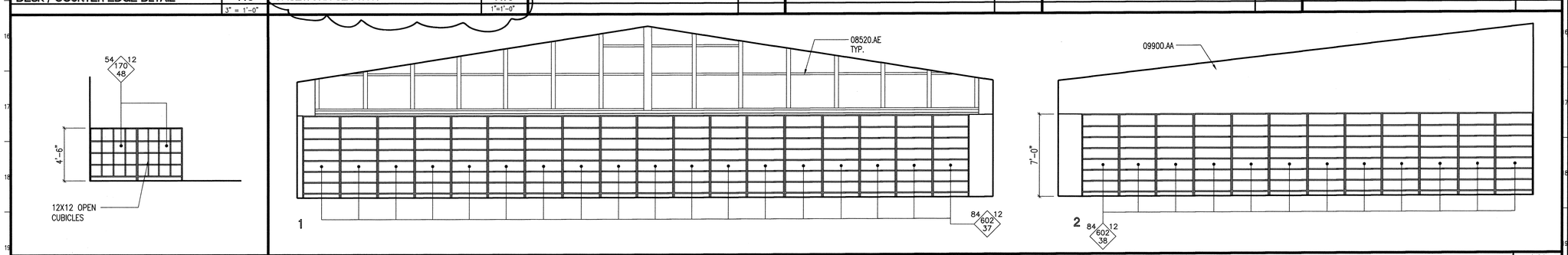

INTERIOR ELEVATIONS	V19	INTERIOR ELEVATIONS	A19
BUILDING N, RM 410	1/4"=1'-0"	BUILDING N, RM 410	1/4"=1'-0"

KEYNOTES

KEYNOTES REFERENCE SPECIFICATION SECTIONS BY MEANS OF A FIVE-DIGIT NUMBER IDENTIFYING THE SECTION WHERE A MORE COMPLETE DESCRIPTION OF THE ITEM INDICATED WILL BE FOUND. THE LETTER SUFFIX OF THE KEYNOTE DOES NOT RELATE TO ANY CORRESPONDING REFERENCE LETTER IN THE SPECIFICATION. KEYNOTES DO NOT DESCRIBE CONSTRUCTION MEANS, METHODS, TECHNIQUES, SEQUENCES, OR PROCEDURES. NO TRADE JURISDICTIONAL ALLOCATION OF THIS WORK IS INTENDED BY THE SUBDIVISION OF THESE KEYNOTES. IT SHALL BE THE CONTRACTOR'S SOLE RESPONSIBILITY TO SUBDIVIDE THE WORK IN THE MANNER HE DEEMS NECESSARY.

DIVISION 2 – SITEWORK

02070.AC EXISTING ITEM TO REMAIN

DIVISION 6 – WOOD & PLASTICS

06402.AK PLASTIC LAMINATE COUNTER TOP W/ COVED BACKSPLASH
06402.AU PLASTIC LAMINATE WORKSURFACE
06402.AX PLASTIC LAMINATE
06402.BF PLASTIC LAMINATE END PANEL
06402.BG PLASTIC LAMINATE FILLER PANEL
06402.BI PLASTIC LAMINATE COUNTER TOP
06402.BL PLASTIC LAMINATE SUPPORT PANEL AT 64" O.C. MAX.
06402.DB 2X BLOCKING
06402.FA 3/8" DIA. EXPANSION BOLT W/ 1-5/8" EMBED MIN. AT 18" O.C. MAX. – HILTI KWIK BOLT II OR EQUAL
06402.HJ HARDWOOD TRIM

DIVISION 8 – DOORS & WINDOWS

08520.AE NEW ALUMINUM WINDOW

DIVISION 9 – FINISHES

09651.CA 4" RESILIENT BASE
09653.AA 4" RESILIENT WALL BASE
09900.AA PAINT FINISH

CASEWORK SYMBOLS

W.I.C. CASEWORK
See Woodwork Institute of California Manual of Millwork
Provide Standard Sizes U.N.O.

Unit Depth
Unit Height — 24 36 220 24 L,M
WIC Designation
Unit Length
Lockable
Style Modification

SYMBOL NOTATIONS

L = PROVIDE LOCKS AT ALL DOORS
M1 = NOT USED
M2 = PROVIDE ADJUSTABLE SHELVES
M3 = MODIFY AS SHOWN ON FLOOR PLAN

KEY PLAN

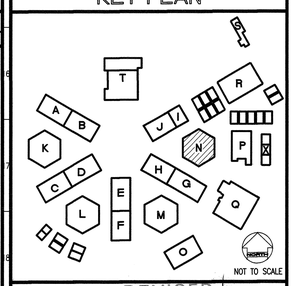

REVISED: MAY 1 2 2004

IDENTIFICATION STAMP
DIV. OF THE STATE ARCHITECT
OFFICE OF REGULATION SERVICES
FILE NO. 19-H51
APPL. NO. 03-106434
AC. FLS. SS.
DATE

Dougherty ■ Dougherty
Architecture • Planning • Interior Design
2534 W. Airport Drive
Santa Ana, CA 92704
(714) 427-0277

Copyright © 2002 Dougherty + Dougherty

LICENSED ARCHITECT DOUGHERTY C-9804 STATE OF CALIFORNIA

Architect Seal

Consultant Seal

LA MIRADA HIGH SCHOOL
MODERNIZATION
NORWALK - LA MIRADA UNIFIED SCHOOL DISTRICT
13520 ADELFA DRIVE LA MIRADA, CA 90638

ENLARGED PLANS AND INTERIOR ELEVATIONS

Date:	04-01-04
Job:	20237.50
Scale:	AS NOTED
Drawn:	
Revisions:	
1	12-01-03

A604

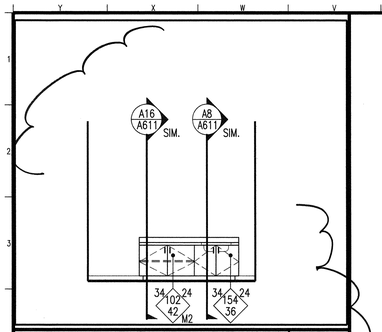

INTERIOR ELEVATIONS	V4
BUILDING R, RM 772	1/4"=1'-0"

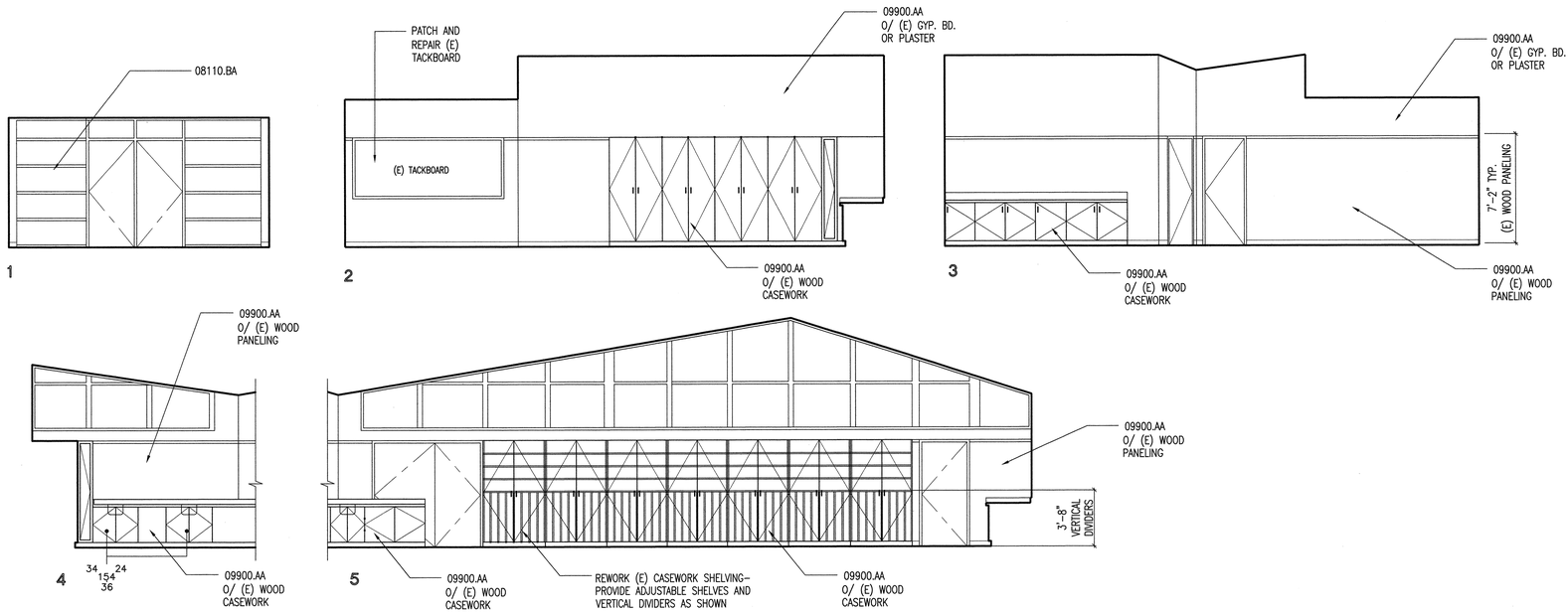

	V8	INTERIOR ELEVATIONS	A8
		BUILDING M, RM 310	1/4"=1'-0"

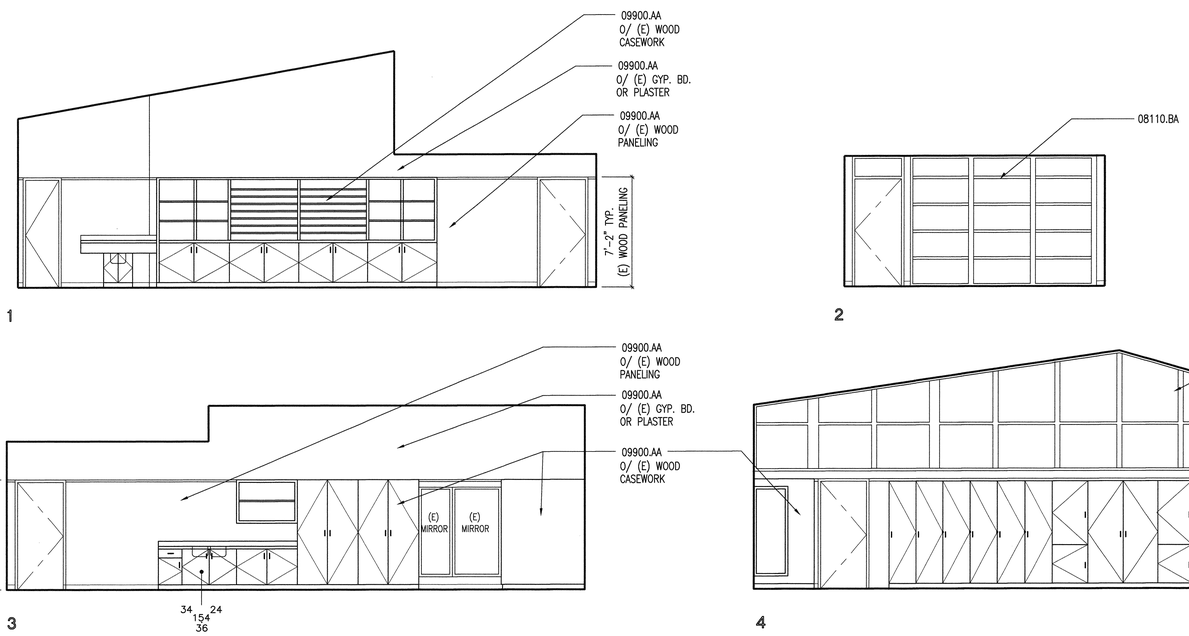

	V12	INTERIOR ELEVATIONS	A16
		BUILDING M, RM 312	1/4"=1'-0"

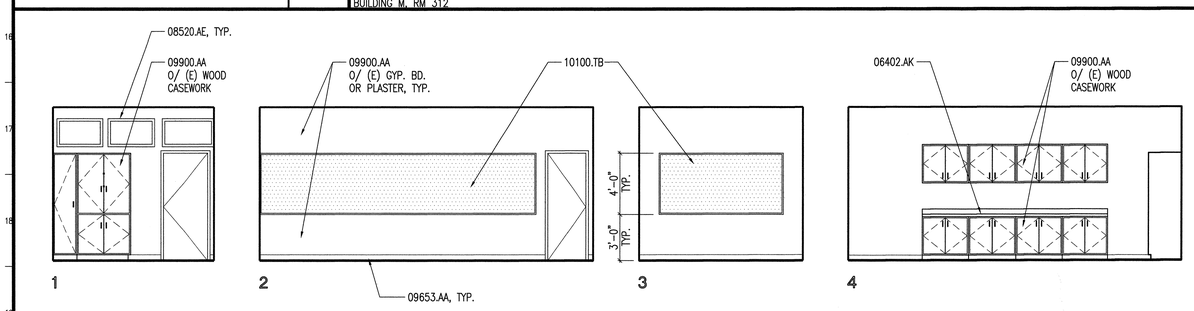

INTERIOR ELEVATIONS	K19
BUILDING A-B, RM 576	1/4"=1'-0"

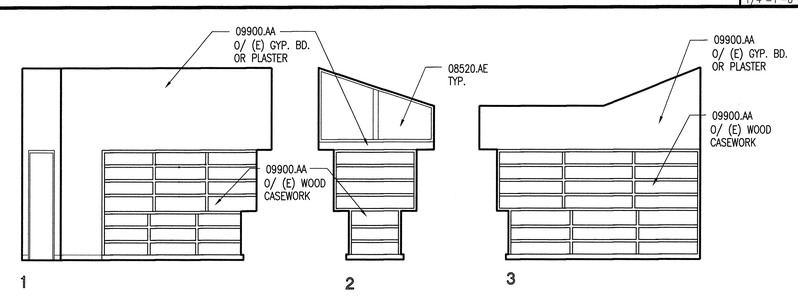

INTERIOR ELEVATIONS	A19
BUILDING M, RM 310A	1/4"=1'-0"

KEYNOTES

KEYNOTES REFERENCE SPECIFICATION SECTIONS BY MEANS OF A FIVE-DIGIT NUMBER IDENTIFYING THE SECTION WHERE A MORE COMPLETE DESCRIPTION OF THE ITEM INDICATED WILL BE FOUND. THE LETTER SUFFIX OF THE KEYNOTE DOES NOT RELATE TO ANY CORRESPONDING REFERENCE LETTER IN THE SPECIFICATION. KEYNOTES DO NOT DESCRIBE CONSTRUCTION MEANS, METHODS, TECHNIQUES, SEQUENCES, OR PROCEDURES. NO TRADE JURISDICTIONAL ALLOCATION OF THIS WORK IS INTENDED BY THE SUBDIVISION OF THESE KEYNOTES. IT SHALL BE THE CONTRACTOR'S SOLE RESPONSIBILITY TO SUBDIVIDE THE WORK IN THE MANNER HE DEEMS NECESSARY.

DIVISION 6 - WOOD & PLASTICS

06402.AK PLASTIC LAMINATE COUNTER TOP W/ COVED BACKSPLASH

DIVISION 8 - DOORS & WINDOWS

08110.BA HOLLOW METAL FRAME
08520.AE NEW ALUMINUM WINDOW

DIVISION 9 - FINISHES

09653.AA 4" RESILIENT WALL BASE
09900.AA PAINT FINISH

DIVISION 10 - SPECIALTIES

10100.TB TACKBOARD

CASEWORK SYMBOLS

W.I.C. CASEWORK
See Woodwork Institute of California Manual of Millwork
Provide Standard Sizes U.N.O.

Unit Depth
Unit Height — 24 220 36 / 24
WIC Designation
Unit Length — L,M
Lockable
Style Modification

SYMBOL NOTATIONS

L = PROVIDE LOCKS AT ALL DOORS
M1 = NOT USED
M2 = PROVIDE ADJUSTABLE SHELVES
M3 = MODIFY AS SHOWN ON FLOOR PLAN

KEY PLAN

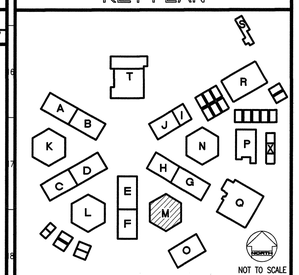

REVISED
MAY 1 2 2004
IDENTIFICATION STAMP
DIV. OF THE STATE ARCHITECT
OFFICE OF REGULATION SERVICES
FILE NO. 19-H51
APPL. NO. 03-106434
ACK. FLS. SS.
DATE

Dougherty + Dougherty
Architecture • Planning • Interior Design
3194-D Airport Loop Drive
Costa Mesa, CA 92626
(714) 427-0277

Copyright © 2002 Dougherty + Dougherty

Consultant Seal

Architect Seal

LA MIRADA HIGH SCHOOL
MODERNIZATION
NORWALK - LA MIRADA UNIFIED SCHOOL DISTRICT
13520 ADELFA DRIVE LA MIRADA, CA 90638

INTERIOR ELEVATIONS

Date:	04-01-04
Job:	20237.50
Scale:	AS NOTED
Drawn:	
Revisions:	

A605

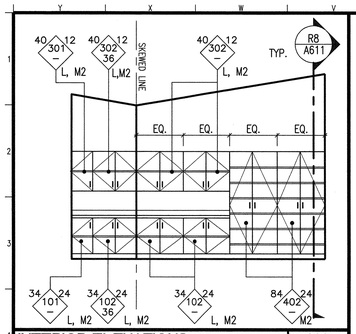

INTERIOR ELEVATIONS — V4

BUILDING M, RM 318A — 1/4"=1'-0"

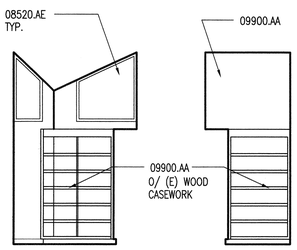

INTERIOR ELEVATIONS — V8

BUILDING M, RM 316A — 1/4"=1'-0"

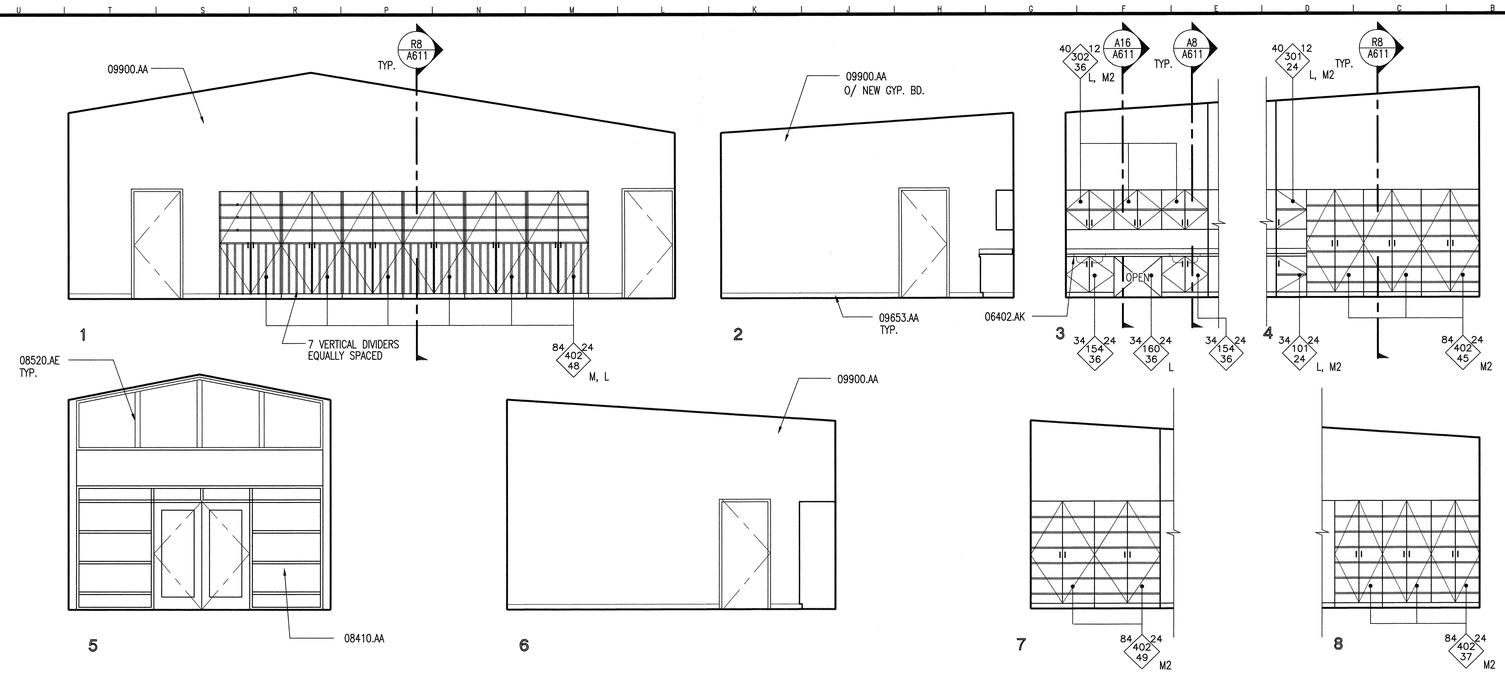

INTERIOR ELEVATIONS — A8

BUILDING M, RM 318 — 1/4"=1'-0"

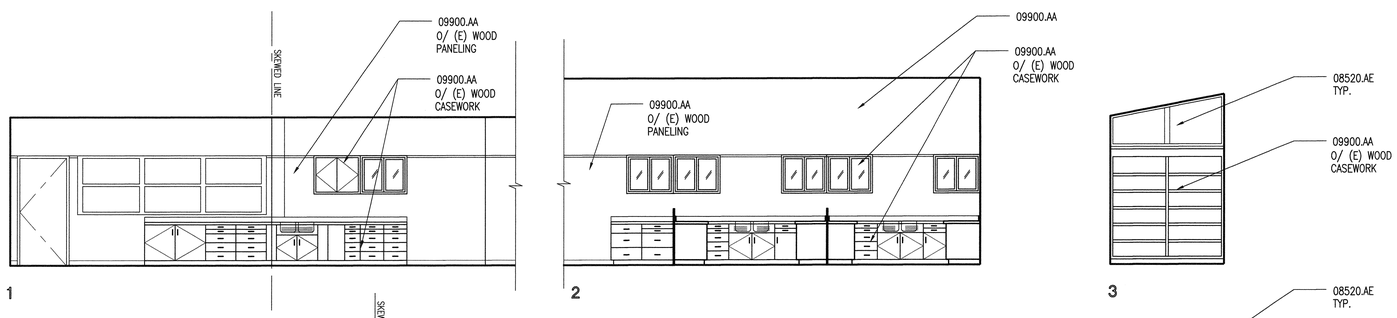

V12

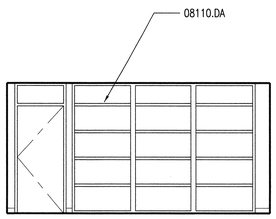

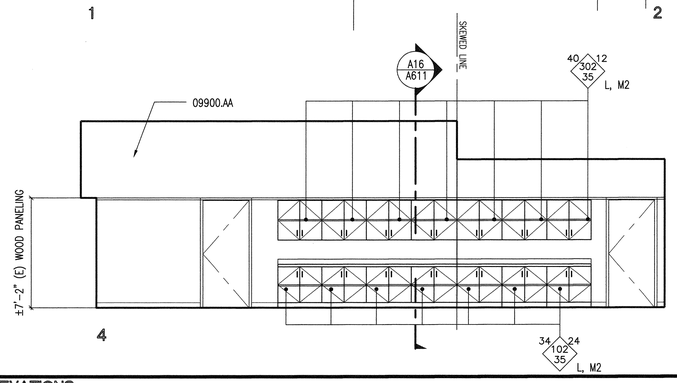

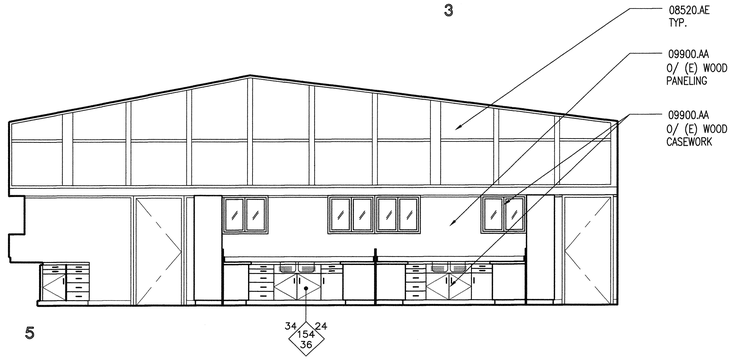

INTERIOR ELEVATIONS — A16

BUILDING M, RM 316

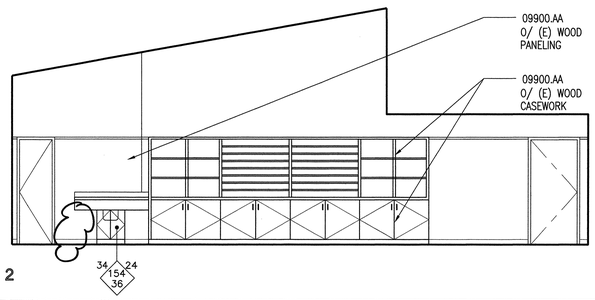

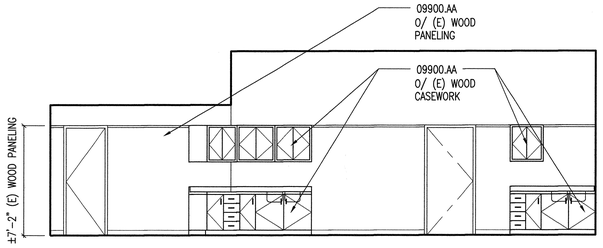

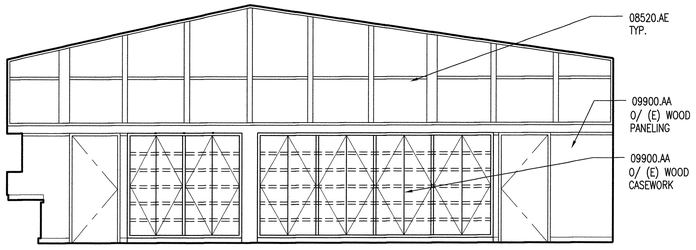

INTERIOR ELEVATIONS — A19

BUILDING M, RM 314 — 1/4"=1'-0"

KEYNOTES

KEYNOTES REFERENCE SPECIFICATION SECTIONS BY MEANS OF A FIVE-DIGIT NUMBER IDENTIFYING THE SECTION WHERE A MORE COMPLETE DESCRIPTION OF THE ITEM INDICATED WILL BE FOUND. THE LETTER SUFFIX OF THE KEYNOTE DOES NOT RELATE TO ANY CORRESPONDING REFERENCE LETTER IN THE SPECIFICATION. KEYNOTES DO NOT DESCRIBE CONSTRUCTION MEANS, METHODS, TECHNIQUES, SEQUENCES, OR PROCEDURES. NO TRADE JURISDICTIONAL ALLOCATION OF THIS WORK IS INTENDED BY THE SUBDIVISION OF THESE KEYNOTES. IT SHALL BE THE CONTRACTOR'S SOLE RESPONSIBILITY TO SUBDIVIDE THE WORK IN THE MANNER HE DEEMS NECESSARY.

DIVISION 6 – WOOD & PLASTICS

06402.AK PLASTIC LAMINATE COUNTER TOP W/ COVED BACKSPLASH

DIVISION 8 – DOORS & WINDOWS

08410.AA ALUMINUM STOREFRONT
08520.AE NEW ALUMINUM WINDOW

DIVISION 9 – FINISHES

09653.AA 4" RESILIENT WALL BASE
09900.AA PAINT FINISH

CASEWORK SYMBOLS

W.I.C. CASEWORK
See Woodwork Institute of California Manual of Millwork
Provide Standard Sizes U.N.O.

Unit Depth
Unit Height — 24 220 36
WIC Designation
Unit Length — 24 L,M
Lockable
Style Modification

SYMBOL NOTATIONS

L = PROVIDE LOCKS AT ALL DOORS
M1 = NOT USED
M2 = PROVIDE ADJUSTABLE SHELVES
M3 = MODIFY AS SHOWN ON FLOOR PLAN

KEY PLAN

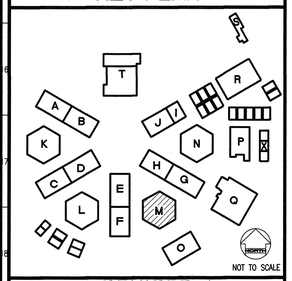

REVISED
MAY 1 2 2004

IDENTIFICATION STAMP
DIV. OF THE STATE ARCHITECT
OFFICE OF REGULATION SERVICES
FILE NO. 19-H51
APPL. NO. 03-106434
AC. FLS. SS.
DATE:

Dougherty ■ Dougherty
Architecture • Planning • Interior Design
3194-D Airport Loop Drive
Costa Mesa, CA 92626
(714) 427-0277

Copyright © 2002 Dougherty + Dougherty

Consultant Seal

Architect Seal

LA MIRADA HIGH SCHOOL MODERNIZATION
NORWALK - LA MIRADA UNIFIED SCHOOL DISTRICT
13520 ADELFA DRIVE LA MIRADA, CA 90638

INTERIOR ELEVATIONS

Date:	04-01-04
Job:	20237.50
Scale:	AS NOTED
Drawn:	
Revisions:	

A606

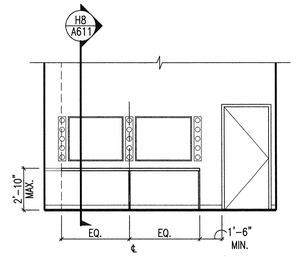

V4	INTERIOR ELEVATIONS	R4
	BUILDING N, RM 416	1/4"=1'-0"

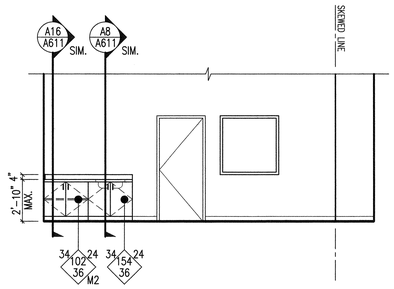

INTERIOR ELEVATIONS	R8
BUILDING N, RM 418	1/4"=1'-0"

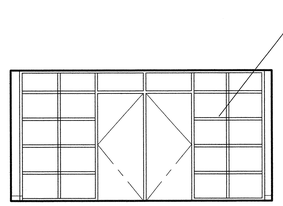

1

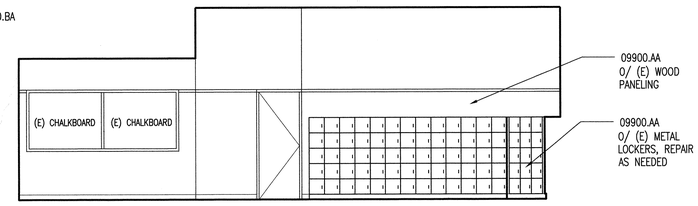

2

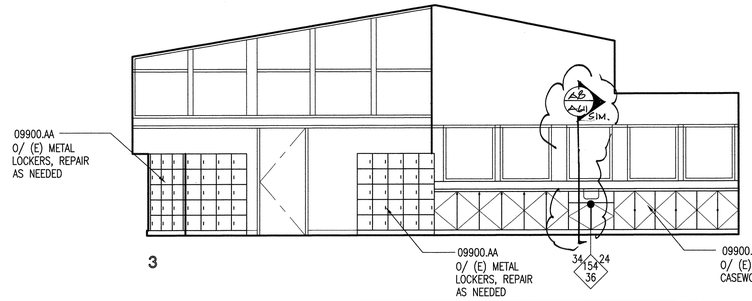

3

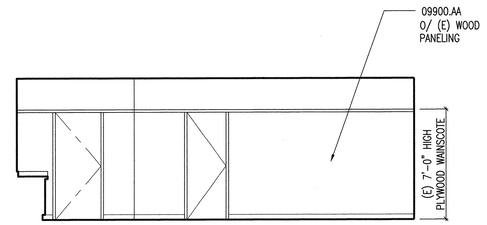

4

INTERIOR ELEVATIONS	A8
BUILDING M, RM 320	1/4"=1'-0"

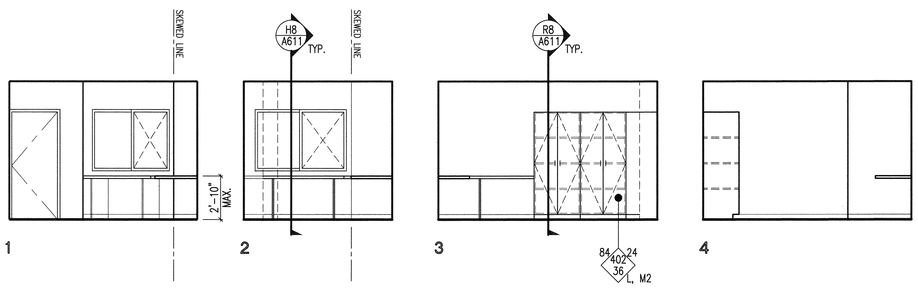

1 2 3 4

INTERIOR ELEVATIONS	M12
BUILDING N, RM 412	1/4"=1'-0"

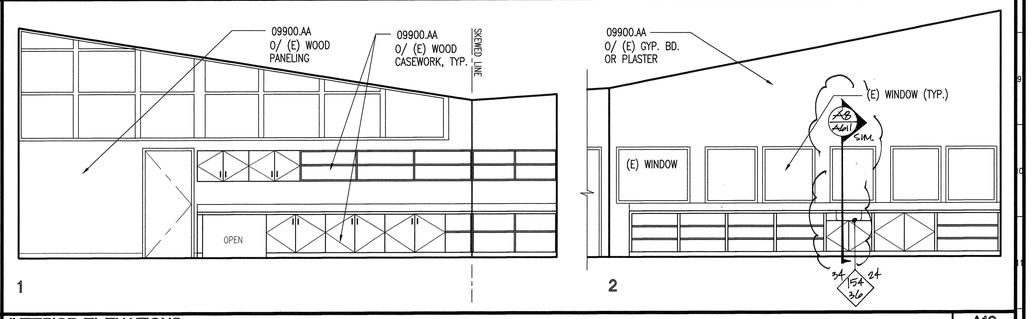

1 2

INTERIOR ELEVATIONS	A12
BUILDING M, RM 321	1/4"=1'-0"

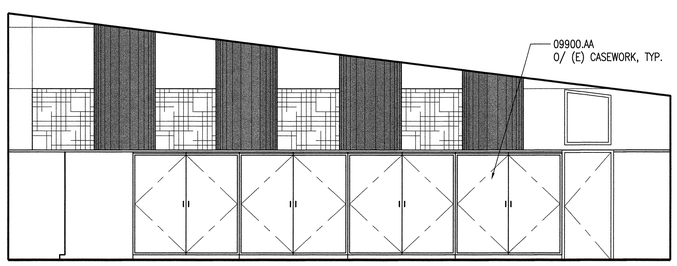

1

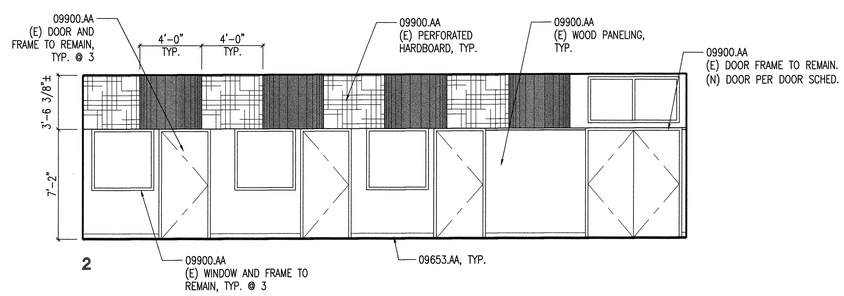

2

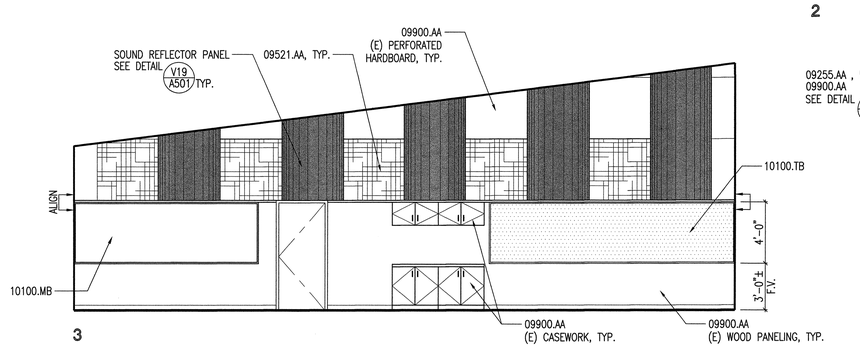

3

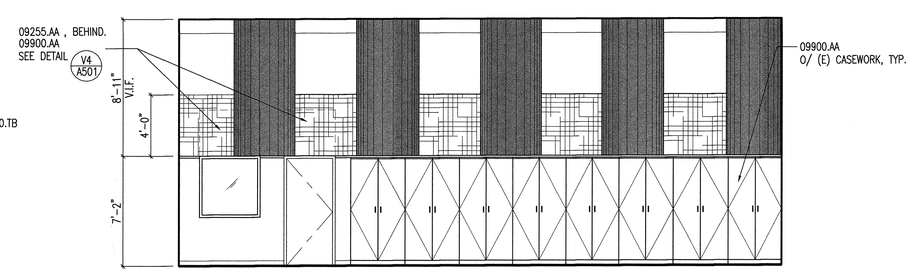

4

INTERIOR ELEVATIONS	A19
BUILDING T, RM 520	1/4"=1'-0"

KEYNOTES

KEYNOTES REFERENCE SPECIFICATION SECTIONS BY MEANS OF A FIVE-DIGIT NUMBER IDENTIFYING THE SECTION WHERE A MORE COMPLETE DESCRIPTION OF THE ITEM INDICATED WILL BE FOUND. THE LETTER SUFFIX OF THE KEYNOTE DOES NOT RELATE TO ANY CORRESPONDING REFERENCE LETTER IN THE SPECIFICATION. KEYNOTES DO NOT DESCRIBE CONSTRUCTION MEANS, METHODS, TECHNIQUES, SEQUENCES, OR PROCEDURES. NO TRADE JURISDICTIONAL ALLOCATION OF THIS WORK IS INTENDED BY THE SUBDIVISION OF THESE KEYNOTES. IT SHALL BE THE CONTRACTOR'S SOLE RESPONSIBILITY TO SUBDIVIDE THE WORK IN THE MANNER HE DEEMS NECESSARY.

DIVISION 8 - DOORS & WINDOWS

08110.BA HOLLOW METAL FRAME

DIVISION 9 - FINISHES

09255.AA 5/8" TYPE "X" GYPSUM BOARD
09521.AA ACOUSTICAL WALL PANEL
09653.AA 4" RESILIENT WALL BASE
09900.AA PAINT FINISH

DIVISION 10 - SPECIALTIES

10100.MB MARKERBOARD
10100.TB TACKBOARD

CASEWORK SYMBOLS

W.I.C. CASEWORK
See Woodwork Institute of California Manual of Millwork
Provide Standard Sizes U.N.O.

Unit Depth
Unit Height — 24 220 36
WIC Designation — 24
Unit Length — L,M
Lockable
Style Modification

SYMBOL NOTATIONS
L = PROVIDE LOCKS AT ALL DOORS
M1 = NOT USED
M2 = PROVIDE ADJUSTABLE SHELVES
M3 = MODIFY AS SHOWN ON FLOOR PLAN

KEY PLAN

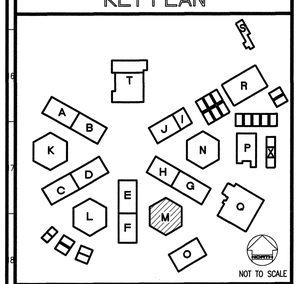

REVISED MAY 1 2 2004

IDENTIFICATION STAMP
DIV. OF THE STATE ARCHITECT
OFFICE OF REGULATION SERVICES
FILE NO. 19-H51
APPL. NO. 03-106434
AC. FLS. NL SS.
DATE

Dougherty ■ Dougherty
Architecture • Planning • Interior Design
2697 Orange Avenue
Costa Mesa, CA 92626
(714) 427-0277

Copyright © 2002 Dougherty + Dougherty

LICENSED ARCHITECT — DOUGHERTY, DOUGLAS W. — C-8604 — STATE OF CALIFORNIA

Consultant Seal

Architect Seal

LA MIRADA HIGH SCHOOL
MODERNIZATION
NORWALK - LA MIRADA UNIFIED SCHOOL DISTRICT
13520 ADELFA DRIVE LA MIRADA, CA 90638

INTERIOR ELEVATIONS

Date:	04-01-04
Job:	20237.50
Scale:	AS NOTED
Drawn:	
Revisions:	

A607

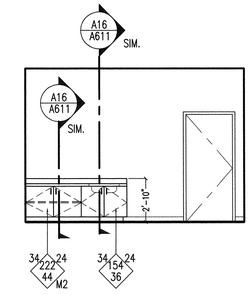

INTERIOR ELEVATIONS — R4

BUILDING K, ROOM 831 — 1/4"=1'-0"

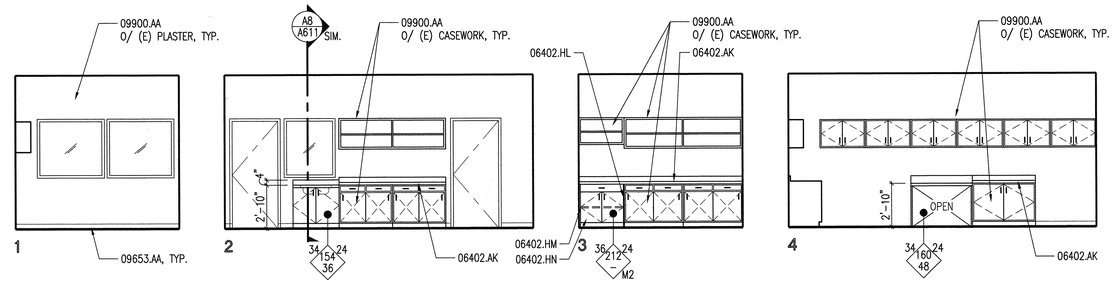

INTERIOR ELEVATIONS — A4

BUILDING C-D, ROOM 177 — 1/4"=1'-0"

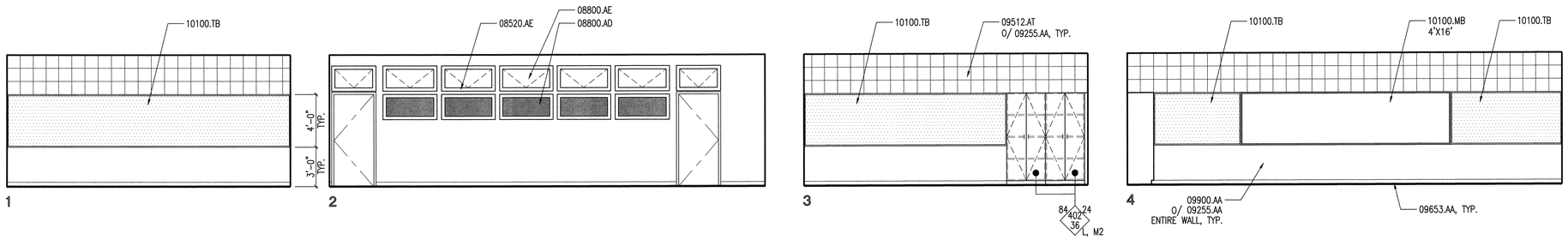

INTERIOR ELEVATIONS — A8

BUILDING C-D, ROOM 165 — 1/4"=1'-0"

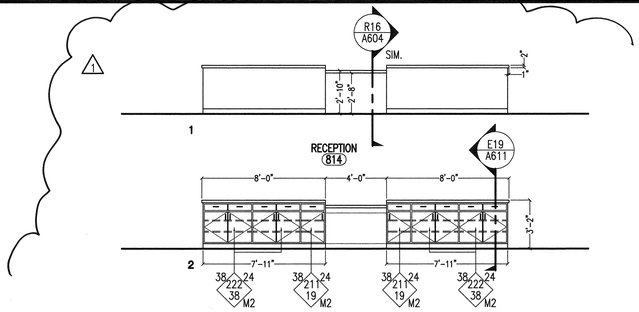

INTERIOR ELEVATIONS — R12

BUILDING K, ROOM 814 — 1/4"=1'-0"

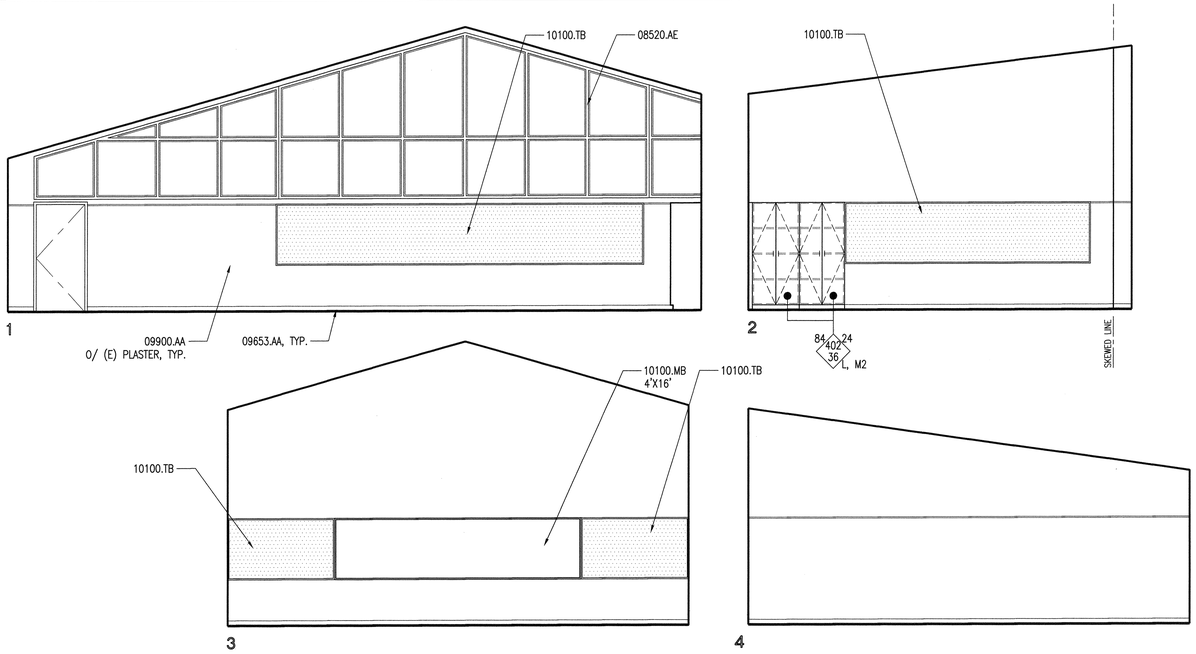

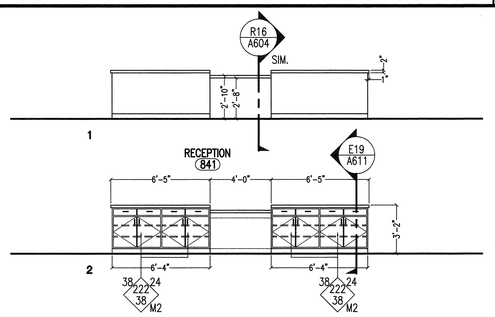

INTERIOR ELEVATIONS — R16

BUILDING K, ROOM 841 — 1/4"=1'-0"

INTERIOR ELEVATIONS — A16

BUILDING N, ROOM 420 — 1/4"=1'-0"

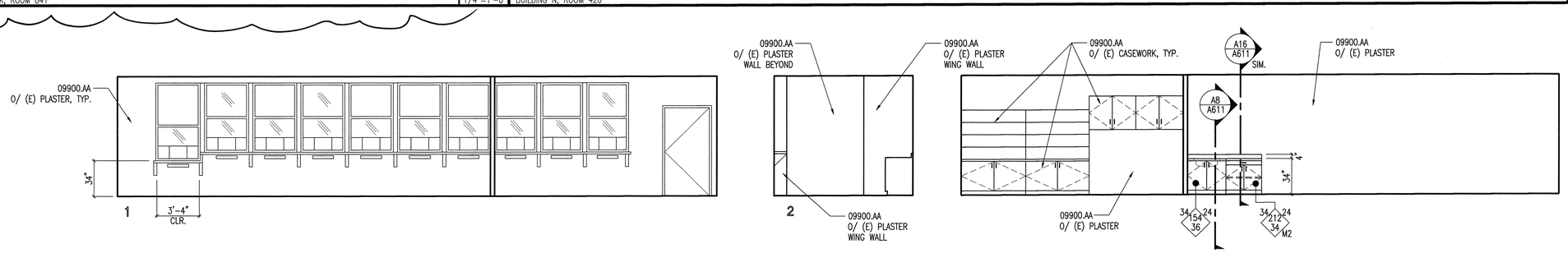

INTERIOR ELEVATIONS — A19

BUILDING A, SNACK BAR 564 — 1/4"=1'-0"

KEYNOTES

KEYNOTES REFERENCE SPECIFICATION SECTIONS BY MEANS OF A FIVE-DIGIT NUMBER IDENTIFYING THE SECTION WHERE A MORE COMPLETE DESCRIPTION OF THE ITEM INDICATED WILL BE FOUND. THE LETTER SUFFIX OF THE KEYNOTE DOES NOT RELATE TO ANY CORRESPONDING REFERENCE LETTER IN THE SPECIFICATION. KEYNOTES DO NOT DESCRIBE CONSTRUCTION MEANS, METHODS, TECHNIQUES, SEQUENCES, OR PROCEDURES. NO TRADE JURISDICTIONAL ALLOCATION OF THIS WORK IS INTENDED BY THE SUBDIVISION OF THESE KEYNOTES. IT SHALL BE THE CONTRACTOR'S SOLE RESPONSIBILITY TO SUBDIVIDE THE WORK IN THE MANNER HE DEEMS NECESSARY.

DIVISION 6 - WOOD & PLASTICS

06402.AK PLASTIC LAMINATE COUNTER TOP W/ COVED BACKSPLASH
06402.HL HARDWOOD END PANEL
06402.HM HARDWOOD FILLER PANEL
06402.HN HARDWOOD BASE CABINET

DIVISION 8 - DOORS & WINDOWS

08520.AE NEW ALUMINUM WINDOW
08800.AD OBSCURED GLAZING
08800.AE CLEAR, TEMPERED GLAZING

DIVISION 9 - FINISHES

09255.AA 5/8" TYPE "X" GYPSUM BOARD
09512.AT ACOUSTICAL TILES
09653.AA 4" RESILIENT WALL BASE
09900.AA PAINT FINISH

DIVISION 10 - SPECIALTIES

10100.MB MARKERBOARD
10100.TB TACKBOARD

CASEWORK SYMBOLS

W.I.C. CASEWORK
See Woodwork Institute of California Manual of Millwork
Provide Standard Sizes U.N.O.

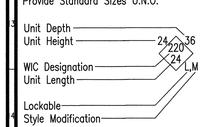

SYMBOL NOTATIONS
L = PROVIDE LOCKS AT ALL DOORS
M1 = NOT USED
M2 = PROVIDE ADJUSTABLE SHELVES
M3 = MODIFY AS SHOWN ON FLOOR PLAN

KEY PLAN

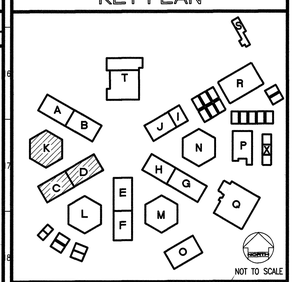

REVISED MAY 12 2004

IDENTIFICATION STAMP
DIV. OF THE STATE ARCHITECT
OFFICE OF REGULATION SERVICES
FILE NO. 19-H51
APPL. NO. 03-106434
AC. FLS. SS.
DATE

Dougherty ■ Dougherty
Architecture • Planning • Interior Design
3194-D Airport Loop Drive
Costa Mesa, CA 92626
(714) 427-0277

Copyright © 2002 Dougherty + Dougherty

Consultant Seal

Architect Seal

LA MIRADA HIGH SCHOOL
MODERNIZATION
NORWALK - LA MIRADA UNIFIED SCHOOL DISTRICT
13520 ADELFA DRIVE LA MIRADA, CA 90638

INTERIOR ELEVATIONS

Date:	04-01-04
Job:	20237.50
Scale:	AS NOTED
Drawn:	SRM
Revisions:	
1	12-01-03

A608

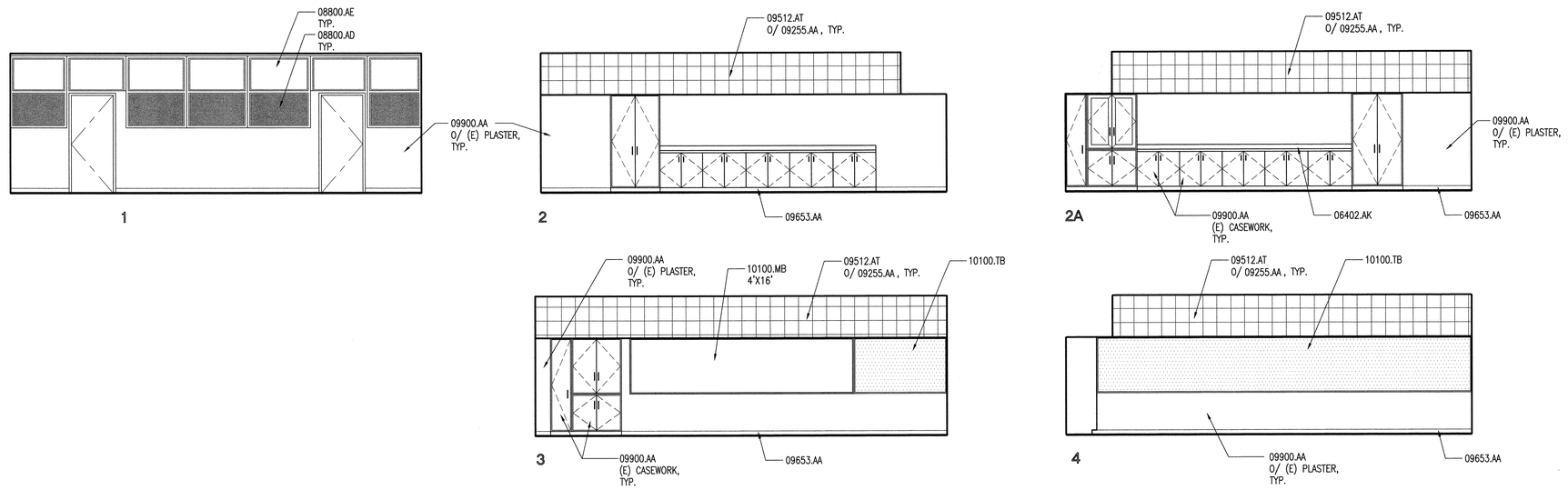

INTERIOR ELEVATIONS

BUILDING C-D, ROOM 170, 172

A7

1/4"=1'-0"

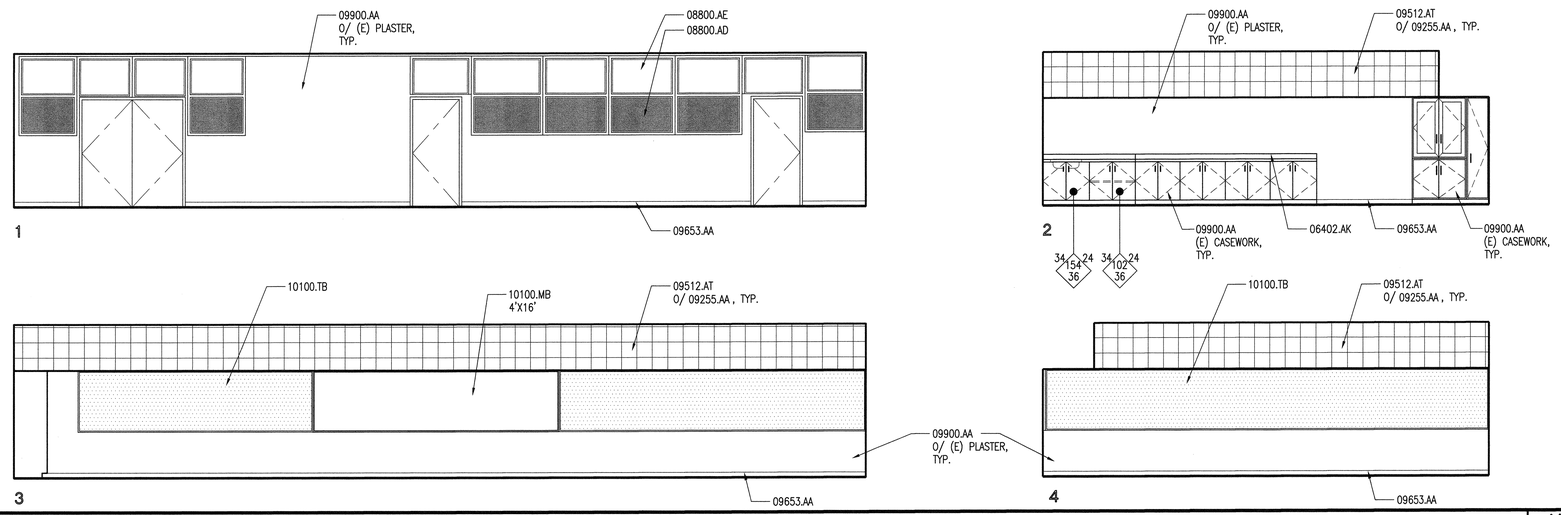

INTERIOR ELEVATIONS

BUILDING C-D, ROOM 162, 163

A13

1/4"=1'-0"

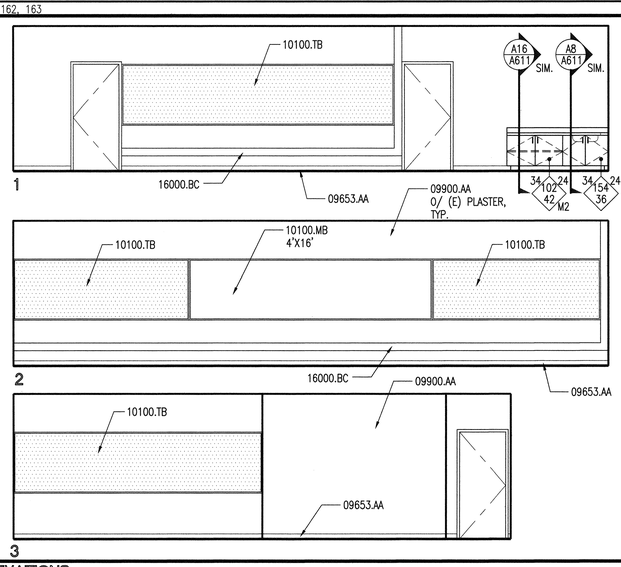

INTERIOR ELEVATIONS

BUILDING R, ROOM 771

P19

1/4"=1'-0"

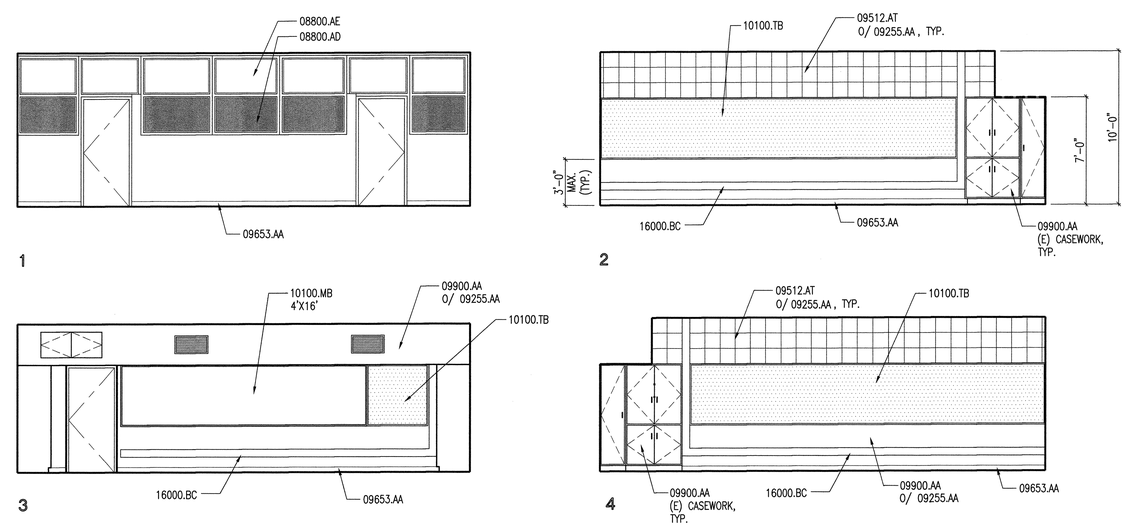

INTERIOR ELEVATIONS

BUILDING A-B, ROOM 572, 574

A19

1/4"=1'-0"

KEYNOTES

KEYNOTES REFERENCE SPECIFICATION SECTIONS BY MEANS OF A FIVE-DIGIT NUMBER IDENTIFYING THE SECTION WHERE A MORE COMPLETE DESCRIPTION OF THE ITEM INDICATED WILL BE FOUND. THE LETTER SUFFIX OF THE KEYNOTE DOES NOT RELATE TO ANY CORRESPONDING REFERENCE LETTER IN THE SPECIFICATION. KEYNOTES DO NOT DESCRIBE CONSTRUCTION MEANS, METHODS, TECHNIQUES, SEQUENCES, OR PROCEDURES. NO TRADE JURISDICTIONAL ALLOCATION OF THIS WORK IS INTENDED BY THE SUBDIVISION OF THESE KEYNOTES. IT SHALL BE THE CONTRACTOR'S SOLE RESPONSIBILITY TO SUBDIVIDE THE WORK IN THE MANNER HE DEEMS NECESSARY.

DIVISION 6 - WOOD & PLASTICS

06402.AK PLASTIC LAMINATE COUNTER TOP W/ COVED BACKSPLASH

DIVISION 8 - DOORS & WINDOWS

08800.AD OBSCURED GLAZING
08800.AE CLEAR, TEMPERED GLAZING

DIVISION 9 - FINISHES

09255.AA 5/8" TYPE "X" GYPSUM BOARD
09512.AT ACOUSTICAL TILES
09653.AA 4" RESILIENT WALL BASE
09900.AA PAINT FINISH

DIVISION 10 - SPECIALTIES

10100.MB MARKERBOARD
10100.TB TACKBOARD

DIVISION 16 - ELECTRICAL

16000.BC SURFACE MOUNTED RACEWAY - SEE ELECTRICAL

CASEWORK SYMBOLS

W.I.C. CASEWORK
See Woodwork Institute of California Manual of Millwork
Provide Standard Sizes U.N.O.

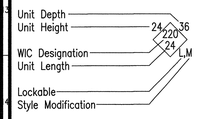

SYMBOL NOTATIONS

L = PROVIDE LOCKS AT ALL DOORS
M1 = NOT USED
M2 = PROVIDE ADJUSTABLE SHELVES
M3 = MODIFY AS SHOWN ON FLOOR PLAN

KEY PLAN

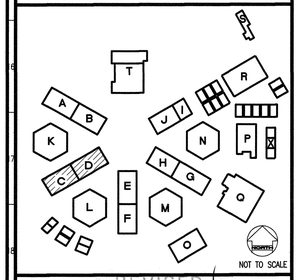

REVISED MAY 1 2 2004

IDENTIFICATION STAMP
DIV. OF THE STATE ARCHITECT
OFFICE OF REGULATION SERVICES
FILE NO. 19-H51
APPL. NO. 03-106434
AC FLS SS
DATE

Dougherty + Dougherty
Architecture • Planning • Interior Design
3165 Airway Avenue
Costa Mesa, CA 92626
(714) 427-0277

Copyright © 2002 Dougherty + Dougherty

Consultant Seal

Architect Seal

LA MIRADA HIGH SCHOOL
MODERNIZATION
NORWALK - LA MIRADA UNIFIED SCHOOL DISTRICT
13520 ADELFA DRIVE LA MIRADA, CA 90638

INTERIOR ELEVATIONS

Date:	04-01-04
Job:	20237.50
Scale:	AS NOTED
Drawn:	
Revisions:	
1	12-01-03

A609

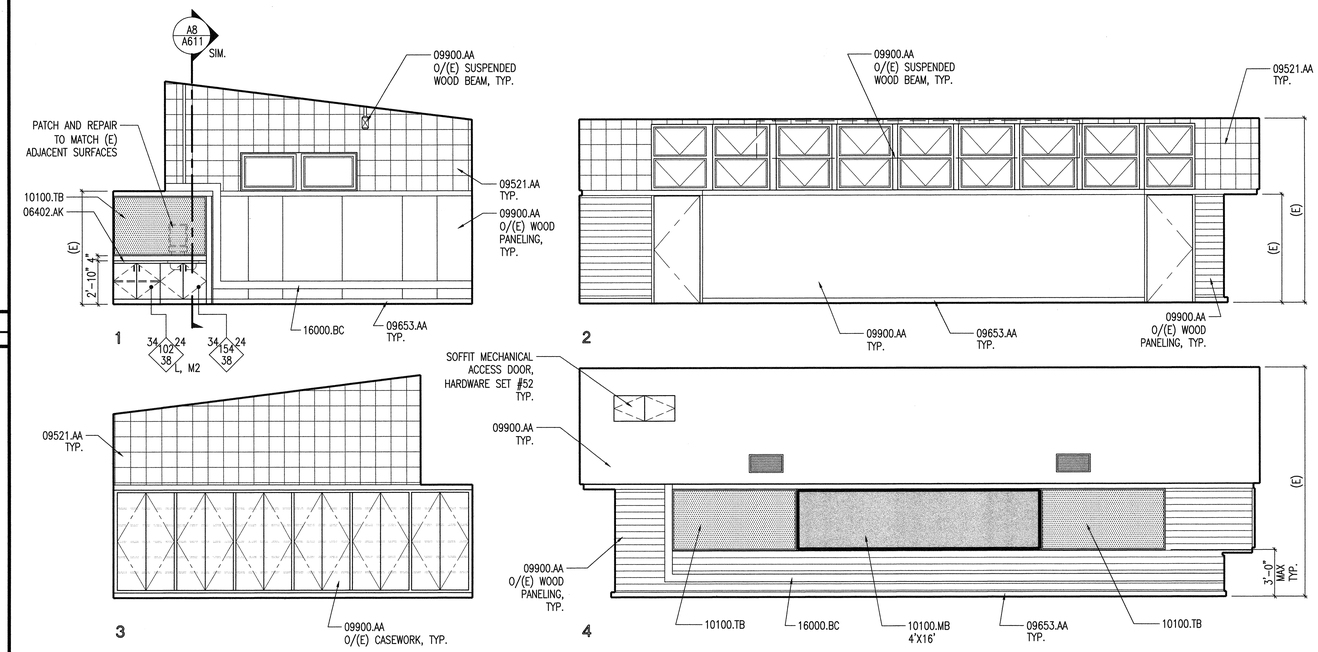

V4	R4

V8	R8	INTERIOR ELEVATIONS	A8
		BUILDING O – CLASSROOM 621	1/4"=1'-0"

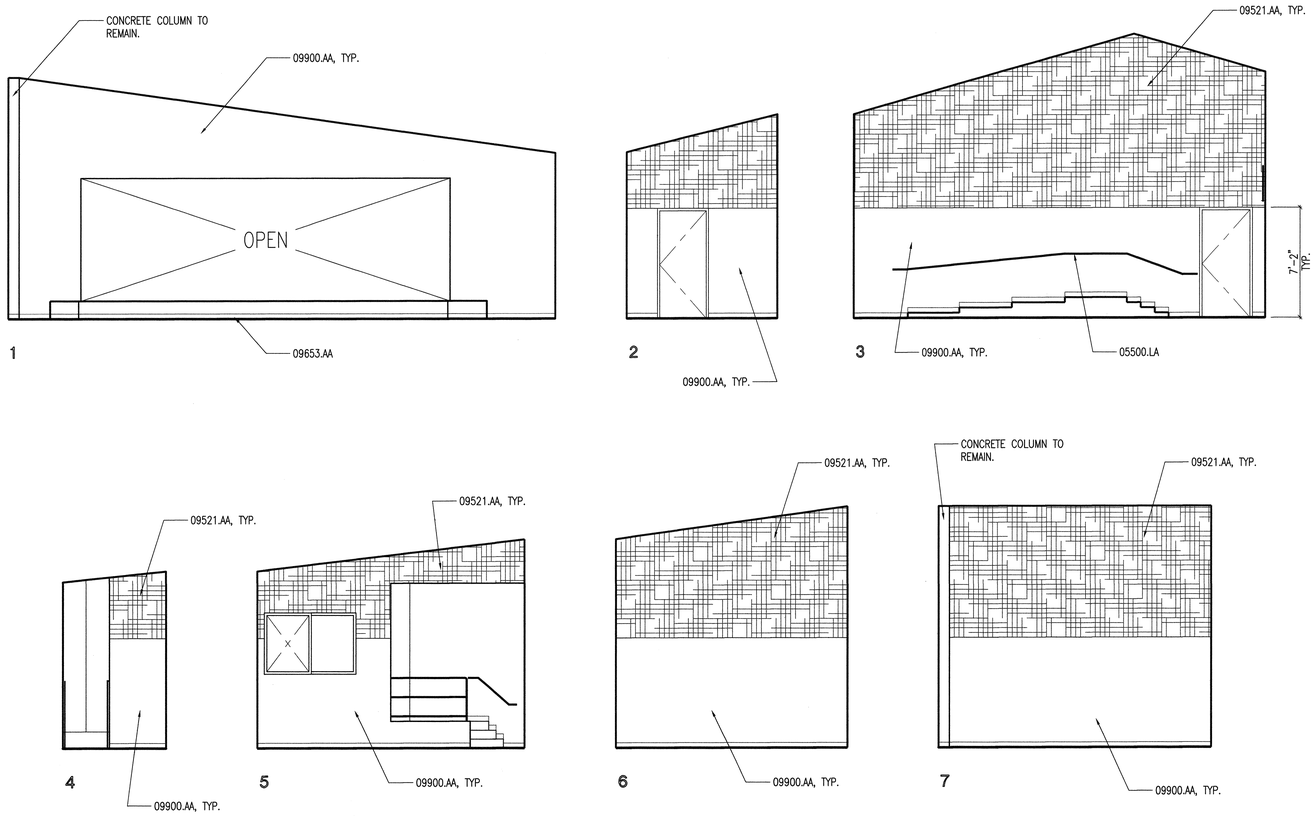

V12	R12

V16	R16

V19	R19	INTERIOR ELEVATIONS	A19
		BUILDING N – THEATER	1/4"=1'-0"

KEYNOTES

KEYNOTES REFERENCE SPECIFICATION SECTIONS BY MEANS OF A FIVE-DIGIT NUMBER IDENTIFYING THE SECTION WHERE A MORE COMPLETE DESCRIPTION OF THE ITEM INDICATED WILL BE FOUND. THE LETTER SUFFIX OF THE KEYNOTE DOES NOT RELATE TO ANY CORRESPONDING REFERENCE LETTER IN THE SPECIFICATION. KEYNOTES DO NOT DESCRIBE CONSTRUCTION MEANS, METHODS, TECHNIQUES, SEQUENCES, OR PROCEDURES. NO TRADE JURISDICTIONAL ALLOCATION OF THIS WORK IS INTENDED BY THE SUBDIVISION OF THESE KEYNOTES. IT SHALL BE THE CONTRACTOR'S SOLE RESPONSIBILITY TO SUBDIVIDE THE WORK IN THE MANNER HE DEEMS NECESSARY.

DIVISION 5 – METALS

05500.LA PIPE HANDRAIL

DIVISION 6 – WOOD & PLASTICS

06402.AK PLASTIC LAMINATE COUNTER TOP W/ COVED BACKSPLASH

DIVISION 9 – FINISHES

09521.AA ACOUSTICAL WALL PANEL
09653.AA 4" RESILIENT WALL BASE
09900.AA PAINT FINISH

DIVISION 10 – SPECIALTIES

10100.MB MARKERBOARD
10100.TB TACKBOARD

DIVISION 16 – ELECTRICAL

16000.BC SURFACE MOUNTED RACEWAY – SEE ELECTRICAL

CASEWORK SYMBOLS

W.I.C. CASEWORK
See Woodwork Institute of California Manual of Millwork
Provide Standard Sizes U.N.O.

Unit Depth
Unit Height
WIC Designation
Unit Length
Lockable
Style Modification

24 220 36 24 LM

SYMBOL NOTATIONS

L = PROVIDE LOCKS AT ALL DOORS
M1 = NOT USED
M2 = PROVIDE ADJUSTABLE SHELVES
M3 = MODIFY AS SHOWN ON FLOOR PLAN

KEY PLAN

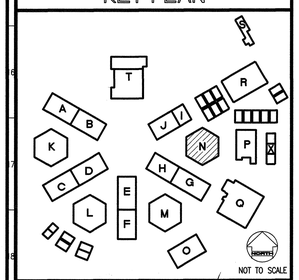

REVISED

IDENTIFICATION STAMP
DIV. OF THE STATE ARCHITECT
OFFICE OF REGULATION SERVICES
FILE NO. 19-H51
APPL. NO. 03-106434
AC. N FLS. HCT SS.
DATE

MAY 12 2004

Dougherty + Dougherty
Architecture · Planning · Interior Design
2151 E. Lincoln Lake Drive
Costa Mesa, CA 92626
(714) 427-0277

Copyright © 2002 Dougherty + Dougherty

LICENSED ARCHITECT
SHAWN M. DOUGHERTY
C-18624
EXP. JUL 31 2004
STATE OF CALIFORNIA

Architect Seal

Consultant Seal

LA MIRADA HIGH SCHOOL
MODERNIZATION
NORWALK - LA MIRADA UNIFIED SCHOOL DISTRICT
13520 ADELFA DRIVE LA MIRADA, CA 90638

INTERIOR
ELEVATIONS

Date:	04-01-04
Job:	20237.50
Scale:	AS NOTED
Drawn:	
Revisions:	

A610

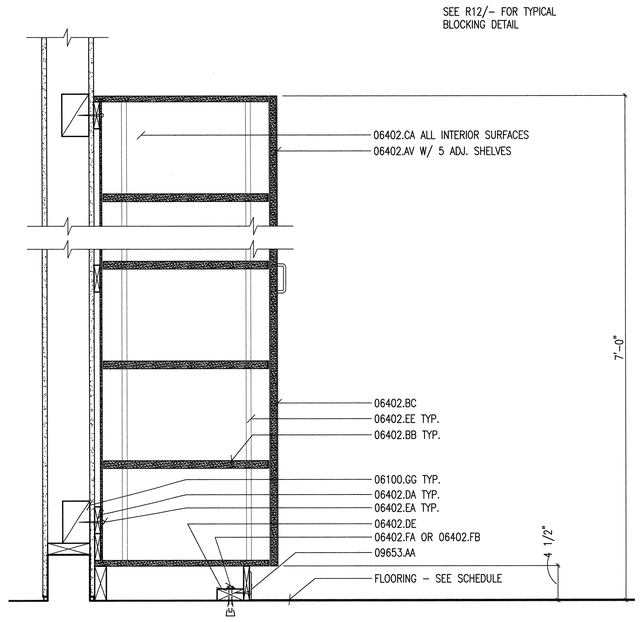

064-20.dwg

TYPICAL CASEWORK MOUNTING – WOOD STUDS | R8 | 1-1/2"=1'-0"

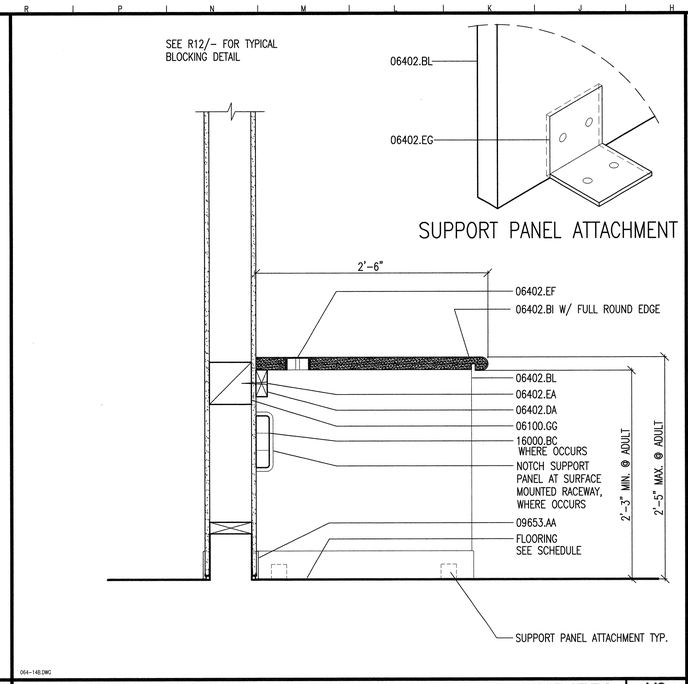

064-14B.DWG

TYPICAL CASEWORK MOUNTING – ACCESSIBLE COMPUTER WORKSURFACE – WOOD STUDS | H8 | 1-1/2"=1'-0"

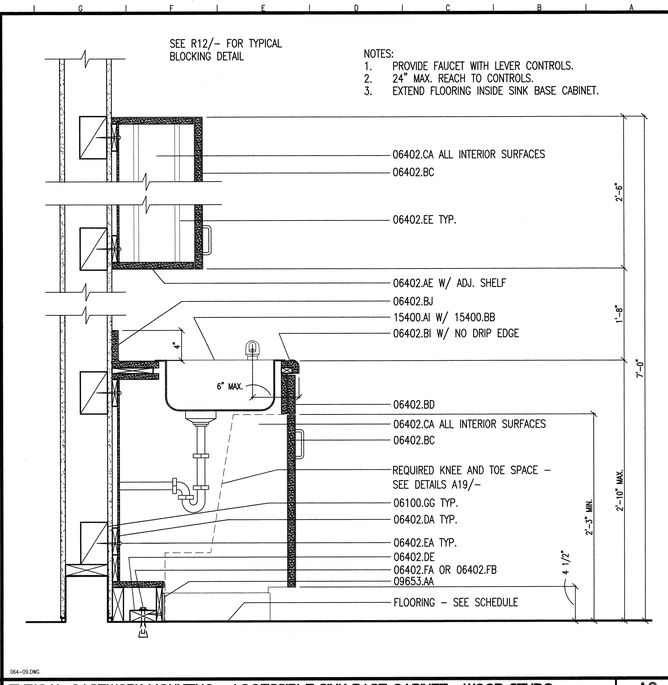

064-09.DWG

TYPICAL CASEWORK MOUNTING – ACCESSIBLE SINK BASE CABINET – WOOD STUDS | A8 | 1-1/2"=1'-0"

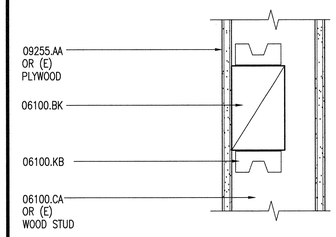

061-02.DWG

BACKING AT WOOD STUD WALL | R12 | 3"=1'-0"

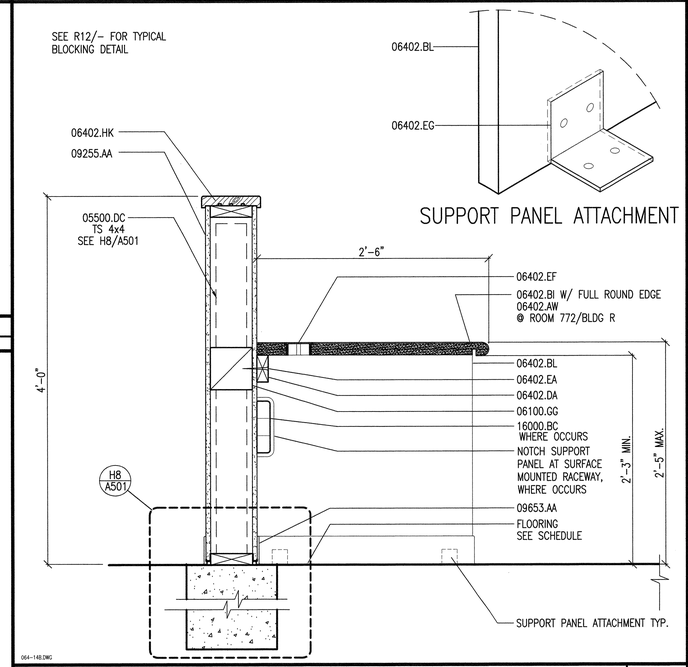

064-14B.DWG

TYPICAL CASEWORK MOUNTING – ACCESSIBLE COMPUTER WORKSURFACE – WOOD STUDS | H16 | 1-1/2"=1'-0"

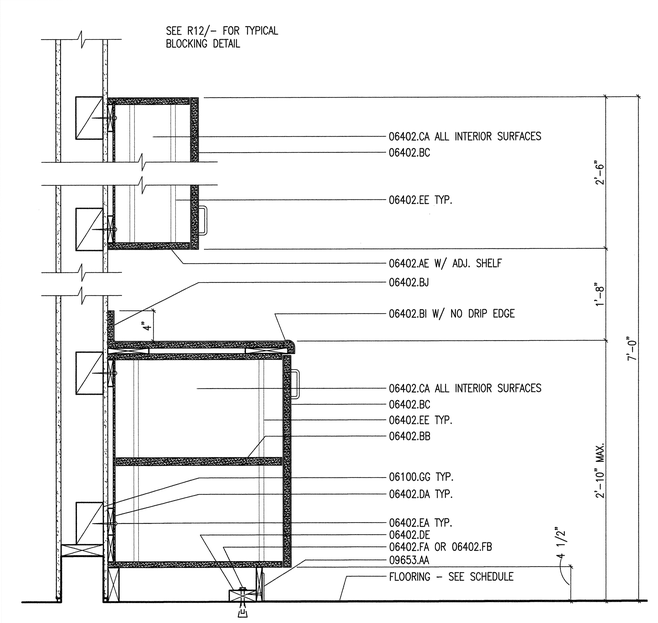

064-10.DWG

TYPICAL CASEWORK MOUNTING – WOOD STUDS | A16 | 1-1/2"=1'-0"

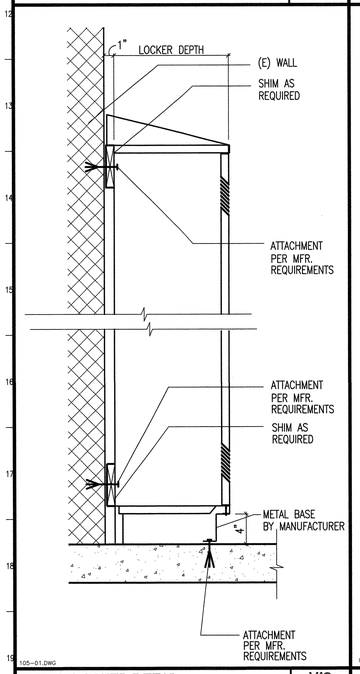

105-01.DWG

METAL LOCKER DETAIL | V19 | 1 1/2"=1'-0"

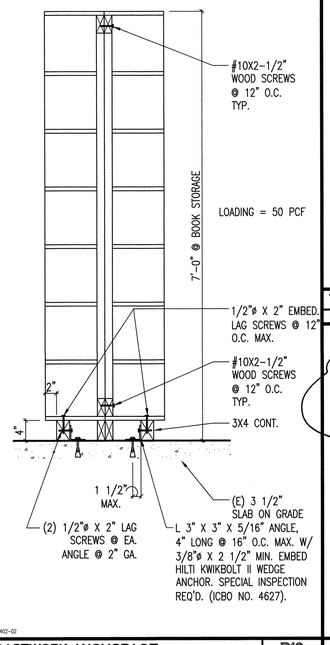

06402-02

CASEWORK ANCHORAGE | R19 | 1"=1'-0"

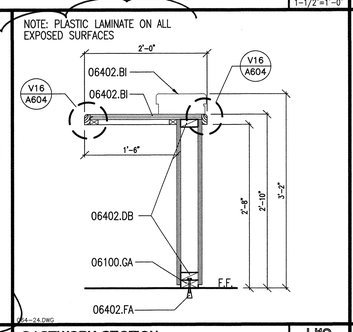

064-24.DWG

CASEWORK SECTION | H19 | 1"=1'-0"

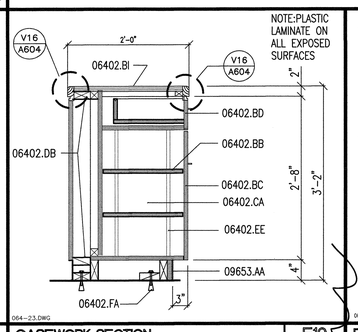

064-23.DWG

CASEWORK SECTION | E19 | 1"=1'-0"

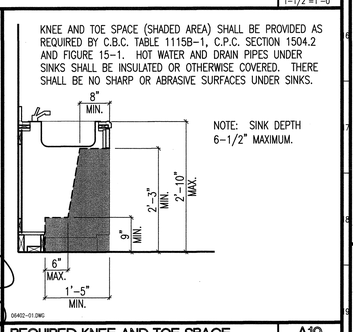

KNEE AND TOE SPACE (SHADED AREA) SHALL BE PROVIDED AS REQUIRED BY C.B.C. TABLE 1115B-1, C.P.C. SECTION 1504.2 AND FIGURE 15-1. HOT WATER AND DRAIN PIPES UNDER SINKS SHALL BE INSULATED OR OTHERWISE COVERED. THERE SHALL BE NO SHARP OR ABRASIVE SURFACES UNDER SINKS.

NOTE: SINK DEPTH 6-1/2" MAXIMUM.

06402-01.DWG

REQUIRED KNEE AND TOE SPACE | A19 | ADULT | 3/4"=1'-0"

KEYNOTES

KEYNOTES REFERENCE SPECIFICATION SECTIONS BY MEANS OF A FIVE-DIGIT NUMBER IDENTIFYING THE SECTION WHERE A MORE COMPLETE DESCRIPTION OF THE ITEM INDICATED WILL BE FOUND. THE LETTER SUFFIX OF THE KEYNOTE DOES NOT RELATE TO ANY CORRESPONDING REFERENCE LETTER IN THE SPECIFICATION. KEYNOTES DO NOT DESCRIBE CONSTRUCTION MEANS, METHODS, TECHNIQUES, SEQUENCES, OR PROCEDURES. NO TRADE JURISDICTIONAL ALLOCATION OF THIS WORK IS INTENDED BY THE SUBDIVISION OF THESE KEYNOTES. IT SHALL BE THE CONTRACTOR'S SOLE RESPONSIBILITY TO SUBDIVIDE THE WORK IN THE MANNER HE DEEMS NECESSARY.

DIVISION 5 – METALS

05500.DC TUBE STEEL

DIVISION 6 – WOOD & PLASTICS

06100.BK 4X BLOCKING
06100.CA WOOD STUD
06100.GA P.T.D.F. SILL PLATE
06100.GG 4X BLOCKING – 4X6 MIN.
06100.KB SIMPSON A35 CLIP
06402.AE PLASTIC LAMINATE UPPER CABINET
06402.AV PLASTIC LAMINATE TALL STORAGE CABINET
06402.AW CHEMICAL RESISTANT PLASTIC LAMINATE COUNTERTOP
06402.BB PLASTIC LAMINATE ADJUSTABLE SHELF
06402.BC PLASTIC LAMINATE CABINET DOOR
06402.BD PLASTIC LAMINATE DRAWER FRONT
06402.BI PLASTIC LAMINATE COUNTER TOP
06402.BJ PLASTIC LAMINATE BACKSPLASH W/ COVE
06402.BL PLASTIC LAMINATE SUPPORT PANEL AT 64" O.C. MAX.
06402.CA CABINET LINER
06402.DA 1X BLOCKING
06402.DB 2X BLOCKING
06402.DE 2X P.T.D.F. BLOCKING
06402.EA #14 X 3" WOOD SCREW AT 16" O.C. MAX. – 4 PER CABINET MIN.
06402.EE RECESSED METAL SHELF PILASTER
06402.EF 3" DIA. PLASTIC GROMMET AT 2'-6" O.C. MAX.
06402.EG 2" X 2" X 2" X 1/8" STEEL ANGLE – RECESS INTO SUPPORT PANEL – PROVIDE AT FRONT AND BACK OF SUPPORT PANEL
06402.FA 3/8" DIA. EXPANSION BOLT W/ 1-5/8" EMBED MIN. AT 18" O.C. MAX. – HILTI KWIK BOLT II OR EQUAL
06402.FB 3" SHOT PIN FASTENER AT 18" O.C. MAX.
06402.HK HARDWOOD CAP – EASED EDGES

DIVISION 9 – FINISHES

09255.AA 5/8" TYPE "X" GYPSUM BOARD
09653.AA 4" RESILIENT WALL BASE

DIVISION 15 – MECHANICAL

15400.AI ACCESSIBLE RIM MOUNTED STAINLESS STEEL SINK – SEE PLUMBING
15400.BB ACCESSIBLE BUBBLER – OUTLET ORIFICE 36" A.F.F. MAX. – SEE PLUMBING

DIVISION 16 – ELECTRICAL

16000.BC SURFACE MOUNTED RACEWAY – SEE ELECTRICAL

KEY PLAN

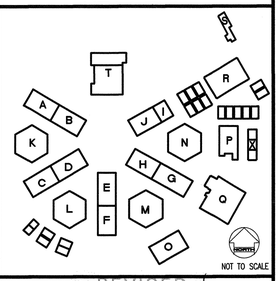

REVISED MAY 1 2 2004

IDENTIFICATION STAMP
DIV. OF THE STATE ARCHITECT
OFFICE OF REGULATION SERVICES
FILE NO. 19-H51
APPL. NO. 03-106434
AC. FLS. SS.
DATE

Dougherty ■ Dougherty
Architecture • Planning • Interior Design
2697 Orangethorpe Ave.
Costa Mesa, CA 92626
(714) 427-0277

Copyright © 2002 Dougherty + Dougherty

LICENSED ARCHITECT DOUGLAS A. DOUGHERTY C-8824 STATE OF CALIFORNIA

Architect Seal

Consultant Seal

LA MIRADA HIGH SCHOOL MODERNIZATION
NORWALK - LA MIRADA UNIFIED SCHOOL DISTRICT
13520 ADELFA DRIVE LA MIRADA, CA 90638

CASEWORK DETAILS

Date:	04-01-04
Job:	20237.50
Scale:	AS NOTED
Drawn:	
Revisions:	
1	12-01-03

A611

EXPANSION TYPE CONCRETE WEDGE ANCHORS DESIGN AND TEST VALUES
HILTI KWIK BOLT-II CARBON STEEL (ICBO #4627)
2000 PSI STONE AGGREGATE CONCRETE

ANCHOR DIA (INCHES)	EMBEDMENT DEPTH (INCHES)	DESIGN VALUES (POUNDS) SHEAR	DESIGN VALUES (POUNDS) TENSION	TENSION TEST (POUNDS)
1/4	1 1/8	320	225	530
	2		430	860
	3 3/4		500	1,000
3/8	1 5/8	740	445	890
	2 1/2	880	935	1,870
	4 1/4	880	1,020	2,040
1/2	2 1/4	1,448	930	1,860
	3 1/2	1,472	1,500	3,000
	6	1,472	1,645	3,290
5/8	2 3/4	2,300	1,300	2,600
	4	2,500	1,970	3,940
	7	2,500	2,500	5,000
3/4	3 1/4	3,100	1,610	3,220
	4 3/4	3,380	2,650	5,300
	8	3,380	3,350	6,700
1	4 1/2	5,500	2,770	5,540
	6	6,900	4,325	8,650
	9	6,900	5,375	10,750

THESE VALUES REFLECT 80% OF ICBO REPORT VALUES FOR SHEAR. THESE VALUES ASSUME SPECIAL INSPECTION AND REFLECT 80% OF ICBO REPORT VALUES FOR TENSION.

NOTES

1. ANCHOR DIAMETER REFERS TO THE THREAD SIZE OF THE WEDGE ANCHOR.
2. APPLY PROOF TEST LOADS TO WEDGE ANCHORS WITHOUT REMOVING THE NUT IF POSSIBLE. IF NOT, REMOVE NUT AND INSTALL A THREADED COUPLER TO THE SAME TIGHTNESS OF THE ORIGINAL NUT USING A TORQUE WRENCH AND APPLY LOAD.
3. REACTION LOADS FROM TEST FIXTURES MAY BE APPLIED CLOSE TO THE ANCHOR BEING TESTED, PROVIDED THE ANCHOR IS NOT RESTRAINED FROM WITHDRAWING BY THE FIXTURE(S).
4. TEST EQUIPMENT IS TO BE CALIBRATED BY AN APPROVED TESTING LABORATORY IN ACCORDANCE WITH STANDARD RECOGNIZED PROCEDURES.
5. THE FOLLOWING CRITERIA APPLY FOR THE ACCEPTANCE OF INSTALLED ANCHORS:

   HYDRAULIC RAM METHOD: THE ANCHOR SHOULD HAVE NO OBSERVABLE MOVEMENT AT THE APPLICABLE TEST LOAD. FOR WEDGE AND SLEEVE TYPE ANCHORS, A PRACTICAL WAY TO DETERMINE OBSERVABLE MOVEMENT IS THAT THE WASHER UNDER THE NUT BECOMES LOOSE.
6. TESTING SHOULD OCCUR 24 HOURS MINIMUM AFTER INSTALLATION OF THE SUBJECT ANCHORS.
7. THE TABULATED VALUES ARE FOR ANCHORS INSTALLED A MINIMUM OF 12 ANCHOR DIAMETERS ON CENTER AND A MINIMUM EDGE DISTANCE OF 10 ANCHOR DIAMETERS.
8. THE TABULATED VALUES FOR LIGHT WEIGHT CONCRETE ARE FOR ANCHORS INSTALLED IN LIGHTWEIGHT EXPANDED SHALE AGGREGATE CONCRETE HAVING THE COMPRESSIVE STRENGTH AT THE TIME OF INSTALLATION. CONCRETE AGGREGATE MUST COMPLY WITH U.B.C. STANDARD NO. 19-3.
9. WHEN INSTALLING DRILLED-IN ANCHORS AND/OR POWDER DRIVEN PINS IN POST-TENSIONED OR REINFORCED SLABS, CARE SHALL BE TAKEN TO AVOID THE REINFORCING STEEL AND TENDONS. MAINTAIN 2" CLEARANCE FROM ANCHORS TO EXISTING REINFORCING BARS AND TENDONS. USE NON-DESTRUCTIVE TESTING TO DETERMINE LOCATION OF REINFORCING AND TENDONS WHERE LOCATION OF THOSE ITEMS ARE NOT CERTAIN.

POWDER DRIVEN FASTNERS

1. POWDER DRIVEN FASTENERS (PDF) SHALL BE MANUFACTURED WITH STEEL CONFORMING TO AISI 1061, 1062 OR 1065 AUSTEMPERED TO A ROCKWELL "C" HARDNESS OF 50-58 AND SHALL BE MANUFACTURED BY HILTI OR APPROVED EQUAL.
2. THE PDF FOR ANCHORING TO CONCRETE SHALL BE 0.145" DIAMETER WITH A MINIMUM PENETRATION OF 1 1/8" INTO THE CONCRETE. MAINTAIN MINIMUM EDGE DISTANCE AND SPACING PER THE MANUFACTURER.
3. THE PDF FOR ANCHORING THROUGH METAL DECK TO LIGHT WEIGHT CONCRETE SHALL BE 0.145" DIAMETER WITH A MINIMUM PENETRATION OF 1 1/8" INTO THE CONCRETE. PDF SHALL BE INSTALLED AT THE HIGH FLUTES OF THE DECK ONLY. MAINTAIN MINIMUM EDGE DISTANCE AND SPACING PER THE MANUFACTURER.
4. THE PDF FOR ANCHORING TO STEEL SHALL BE 0.145" DIAMETER WITH PENETRATION TROUGH THE BASE METAL. MAINTAIN MINIMUM EDGE DISTANCE AND SPACING PER THE MANUFACTURER.
5. PDF LOADS ARE LIMITED TO 100# IN SHEAR OR TENSION.
6. TESTING – THE OPERATOR, TOOL, AND FASTENERS SHALL BE PREQUALIFIED BY THE PROJECT INSPECTOR. HE SHALL OBSERVE THE TESTING OF THE FIRST 10 FASTENER INSTALLATIONS. A TEST "PULL – OUT " LOAD OF NOT LESS THAN TWICE THE DESIGN LOAD, OR 200 POUNDS, WHICHEVER IS GREATER, SHALL BE APPLIED TO THE PIN IN SUCH A MANNER AS NOT TO RESIST THE SPALLING TENDENCY OF THE CONCRETE SURROUNDING THE PIN. THEREAFTER, RANDOM TESTS UNDER THE PROJECT INSPECTOR'S SUPERVISION SHALL BE MADE OF APPROXIMATELY 1 IN 10 PINS. EXCEPT THAT WHEN THE DESIGN LOAD EXCEEDS 100 POUNDS. ONE HALF OF THE PINS SHALL BE TESTED. SHOULD FAILURE OCCUR ON ANY PIN TESTED. ALL INSTALLATIONS MUST BE TESTED AND UNFAIR PINS REPLACED. PINS SHALL BE TESTED. SHOULD FAILURE OCCUR ON ANY PIN TESTED.

BRICK MASONRY

1. EXTERIOR FACE BRICK SHALL BE AS SPECIFIED BY THE ARCHITECT AND SHALL CONFORM TO ASTM C216, GRADE SW.
2. SEE ARCHITECTURAL DRAWINGS AND SPECIFICATIONS FOR TYPES OF UNITS, LAYING PATTERN, AND JOINTS DETAILS.
3. THE MINIMUM ULTIMATE COMPRESSIVE STRENGTH OF THE MASONRY WALL ASSEMBLAGE AT 28 DAYS SHALL BE 2500 PSI. PRISM TESTS SHALL BE MADE IN ACCORDANCE WITH THE CCR, SECTION 2105A.
4. SOLID GROUT ALL MASONRY. GROUT SHALL BE FRESHLY PREPARED AND UNIFORMLY MIXED, COMPOSED BY VOLUME OF ONE PART PORTLAND CEMENT, TWO TO THREE PARTS SAND, AND ONE TO TWO PARTS PEA GRAVEL TO WHICH IS ADDED NOT MORE THAN ONE TENTH (1/10) PART HYDRATED LIME. SUFFICIENT WATER SHALL BE ADDED TO PRODUCE A CONSISTENCY FOR POURING WITHOUT SEGREGATION OF GROUT CONSTITUENTS. GROUT SHALL ATTAIN A MINIMUM COMPRESSIVE STRENGTH OF 2000 PSI AT 28 DAYS.
5. PROVIDE 2 1/2" MINIMUM GROUT SPACE AND 1/2" MINIMUM GROUT BETWEEN REINFORCEMENT AND MASONRY.
6. MORTAR SHALL BE FRESHLY PREPARED AND UNIFORMLY MIXED, COMPOSED BY VOLUME OF ONE PART PORTLAND CEMENT, THREE (3) PARTS SAND TO WHICH IS ADDED NOT LESS THAN ONE QUARTER (1/4) BUT NOT MORE THAN ONE HALF (1/2) PART HYDRATED LIME. MORTAR SHALL BE TYPE "S" AND SHALL ATTAIN A MINIMUM COMPRESSIVE STRENGTH OF 2000 PSI AT 28 DAYS.
7. PORTLAND CEMENT SHALL BE TYPE I AND CONFORM TO ASTM C150.
8. SAND AGGREGATES SHALL BE CLEAN, SHARP, WELL GRADED, AND FREE OF DETRIMENTAL AMOUNTS OF DUST, LUMPS, SHALE, ALKALI, AND ORGANIC MATERIAL. THESE AGGREGATES SHALL CONFORM TO ASTM C404 FOR GROUT AND ASTM C144 FOR MORTAR.
9. ALL BRICK MASONRY SHALL HAVE CONTINUOUS TESTING AND INSPECTION BY AN INSPECTOR APPROVED BY THE DSA.

REINFORCING STEEL (FOR CONCRETE AND MASONRY)

1. REINFORCING BARS SHALL CONFORM TO THE REQUIREMENTS OF CHAPTER 19A OF THE CODE, ASTM A615, GRADE 60 UNO. DEFORMATIONS SHALL BE IN ACCORDANCE WITH ASTM A-615.
2. BARS SHALL BE CLEAN OF RUST, GREASE, OR OTHER MATERIALS LIKELY TO IMPAIR BOND. ALL REINFORCING BAR BENDS SHALL BE MADE COLD.
3. WELDED WIRE FABRIC SHALL CONFORM TO ASTM A-185. PROVIDE LAPS AS PER THE CODE SECTION 1912A.19, 9" MINIMUM. 9" MINIMUM. WWF SHALL BE SUPPORTED ON APPROVED CHAIRS.
4. REINFORCING BAR SPLICES SHALL BE MADE AS INDICATED ON THE DRAWINGS. MINIMUM SPLICE LENGTH FOR REINFORCING STEEL BARS IN MASONRY SHALL BE 48 BAR DIAMETERS, 24" MINIMUM. MINIMUM SPLICE LENGTH FOR REINFORCING STEEL BARS IN CONCRETE SHALL BE AS PER THE CODE SECTION 1912A.(SEE SPLICE SCHEDULE ON 12/S511) LAP ALL HORIZONTAL BARS AT CORNERS AND INTERSECTIONS. STAGGER ALL SPLICES UNLESS NOTED OTHERWISE ON PLANS.
5. ALL BARS SHALL BE MARKED SO THEIR IDENTIFICATION CAN BE MADE WHEN THE FINAL IN-PLACE INSPECTION IS MADE.
6. WHERE WELDING OF REINFORCING IS APPROVED BY THE STRUCTURAL ENGINEER, IT SHALL BE DONE BY AWS CERTIFIED WELDERS USING E90XX OR APPROVED ELECTRODES. WELDING PROCEDURES SHALL CONFORM TO THE REQUIREMENTS OF STRUCTURAL WELDING CODE- REINFORCING STEEL", AWS-D1.4, LATEST REVISION. REINFORCING BARS TO BE WELDED SHALL CONFORM TO THE REQUIREMENTS OF ASTM A-706.
7. BARS IN SLABS SHALL BE SECURELY SUPPORTED ON WELL-CURED CONCRETE BLOCKS OR APPROVED METAL CHAIRS, PRIOR TO PLACING CONCRETE.
8. REINFORCING STEEL SHALL BE DETAILED IN ACCORDANCE WITH THE "A.C.I. MANUAL OF STANDARD PRACTICE FOR DETAILING REINFORCED CONCRETE STRUCTURES", LATEST EDITION.
9. COMPLETE AND DETAILED REINFORCING PLACEMENT DRAWINGS SHALL BE PREPARED AND SUBMITTED TO THE ARCHITECT FOR APPROVAL BY THE STRUCTURAL ENGINEER PRIOR TO FABRICATION IN ACCORDANCE WITH THE SPECIFICATIONS AND APPLICABLE CODES. THESE DRAWINGS SHALL BE AVAILABLE ON THE JOB SITE PRIOR TO PLACING OF CONCRETE.
10. MILL TEST REPORTS FOR GRADE 60 BARS SHALL BE SUBMITTED PRIOR TO PLACEMENT OF CONCRETE.
11. ~~CONTINUOUS INSPECTION OF CONCRETE SHALL INCLUDE INSPECTION DURING INSTALLATION OF REINFORCING STEEL. INSPECTION SHALL BE SCHEDULED SO THAT PLACEMENT OF REINFORCING STEEL, CONDUIT, SLEEVES, AND EMBEDDED ITEMS MAY BE CORRECTED PRIOR TO PLACEMENT OF OVERLYING GRIDS OR REINFORCING STEEL.~~
12. ALL GRADE 60 REINFORCING STEEL SHALL BE CLEARLY MARKED TO DIFFERENTIATE THEM FROM GRADE 40 REINFORCING STEEL IF CONCURRENTLY ON SITE.
13. CONCRETE PROTECTION FOR REINFORCEMENT

(i) CAST-IN-PLACE CONCRETE (NON-PRESTRESSED). THE FOLLOWING MINIMUM CONCRETE COVER SHALL BE PROVIDED FOR REINFORCEMENT:

	MINIMUM COVER, IN.
A. CONCRETE CAST AGAINST AND PERMANENTLY EXPOSED TO EARTH	3
B. CONCRETE EXPOSED TO EARTH OR WEATHER:	
NO. 6 THROUGH NO. 18 BAR	2
NO 5 BAR, W31 OR D31 WIRE & SMALLER	1 1/2
C. CONCRETE NOT EXPOSED TO WEATHER OR IN CONTACT WITH GROUND:	
SLABS, WALLS, JOISTS:	
NO. 14 AND NO. 18 BAR	1 1/2
NO. 11 BAR & SMALLER	3/4
BEAMS, COLUMNS:	
PRIMARY REINFORCEMENT TIES, STIRRUPS, SPIRALS	1 1/2
SHELLS, FOLDED PLATE MEMBERS:	
NO. 6 BAR AND LARGER	3/4
NO 5 BAR, W31 OR D31 WIRE & SMALLER	1/2

STRUCTURAL STEEL

1. STRUCTURAL STEEL SHALL BE DETAILED, FABRICATED AND ERECTED BY AN APPROVED FABRICATOR IN ACCORDANCE WITH THE AISC SPECIFICATION FOR THE DESIGN, FABRICATION AND ERECTION OF STRUCTURAL STEEL FOR BUILDINGS (LATEST EDITION), AND WITH CHAPTER 22A OF THE CODE.
2. ALL STRUCTURAL STEEL SHALL CONFORM TO THE ASTM DESIGNATION AS INDICATED BELOW (UNO):

WF SHAPES W8 AND SMALLER, PLATES U.N.O., CONNECTION PLATES, AND MISC.	A-36
W10 AND LARGER	A-992
PIPE COLUMNS	A-500, GRADE B
BOLTS IN CONCRETE/MASONRY	A-307
ANGLES, CHANNELS, WT SHAPES	A-36

3. THE STRUCTURAL STEEL FABRICATOR SHALL FURNISH SHOP DRAWINGS TO THE ARCHITECT OF ALL STEEL FOR ARCHITECTS AND STRUCTURAL ENGINEERS REVIEW AND APPROVAL BEFORE FABRICATION.
4. BOLT HOLES USED IN STEEL SHALL BE 1/16" LARGER IN DIAMETER THAN NOMINAL SIZE OF BOLT USED, EXCEPT AS NOTED.
5. ALL STRUCTURAL STEEL SURFACES THAT ARE ENCASED IN CONCRETE, OR MASONRY, SPRAY ON FIREPROOFING, OR ARE ENCASED BY BUILDING FINISH, SHALL BE LEFT UNPRIMED.
6. ALL WELDING IS TO BE DONE BY CERTIFIED WELDERS USING E70XX ELECTRODES (UNO). ALL WELDS SHALL BE IN CONFORMITY WITH THE PROJECT SPECIFICATIONS AND THE CODE FOR WELDING IN BUILDING CONSTRUCTION (AWS D1.1 LATEST REVISION) OF THE AMERICAN WELDING SOCIETY. SEE SPECIAL INSPECTIONS SECTION FOR WELDING INSPECTION REQUIREMENTS. USE OF E70T-4 WIRE IS NOT PERMITTED.
7. WELD LENGTHS CALLED FOR ON PLANS ARE THE NET EFFECTIVE LENGTH REQUIRED. WHERE FILLET WELD SYMBOL IS GIVEN WITHOUT INDICATION OF SIZE, USE MINIMUM SIZE WELDS AS SPECIFIED IN AISC MANUAL OF STEEL CONSTRUCTION 9TH EDITION, SECTION J2.2b
8. SEE ARCHITECTURAL DRAWINGS FOR EXPOSED STEEL FINISH.

FOUNDATION

1. FOUNDATION DESIGN BASED ON CBC CHAPTER 18A.
2. FOOTINGS ARE DESIGNED BASED ON THE FOLLOWING INFORMATION: ALLOWABLE BEARING = 1000 PSF
3. CONTRACTOR TO PROVIDE FOR DE-WATERING OF EXCAVATIONS FROM EITHER SURFACE WATER, GROUND WATER OR SEEPAGE, IF REQUIRED.
4. CONTRACTOR SHALL PROVIDE FOR DESIGN AND INSTALLATION OF ALL CRIBBING, SHEATHING AND SHORING REQUIRED AND SHALL BE SOLELY RESPONSIBLE FOR ALL EXCAVATION PROCEDURES INCLUDING LAGGING, SHORING AND PROTECTION OF ADJACENT PROPERTY, STRUCTURES, STREETS AND UTILITIES IN ACCORDANCE WITH ALL NATIONAL, STATE AND LOCAL SAFETY ORDINANCES.
5. EXCAVATION FOR FOOTINGS SHALL BE APPROVED BY THE SOILS ENGINEER PRIOR TO PLACING THE CONCRETE AND REINFORCING. CONTRACTOR TO NOTIFY THE INSPECTOR WHEN INSPECTION OF EXCAVATION IS READY. INSPECTOR TO SUBMIT LETTER OF COMPLIANCE.
6. ALL EXCAVATIONS SHALL BE PROPERLY BACKFILLED. DO NOT PLACE BACK FILL BEHIND RETAINING WALLS BEFORE CONCRETE OR GROUT HAS ATTAINED FULL DESIGN STRENGTH. CONTRACTORS SHALL BRACE OR PROTECT ALL BUILDING AND PIT WALLS BELOW GRADE FROM LATERAL LOADS UNTIL ATTACHING FLOORS ARE COMPLETELY IN PLACE AND HAVE ATTAINED FULL STRENGTH. CONTRACTOR SHALL PROVIDE FOR DESIGN, PERMITS AND INSTALLATION OF SUCH BRACING.
7. FOUNDATIONS SHALL BE PLACED AND ESTIMATED ACCORDING TO DEPTHS SHOWN ON DRAWINGS. SHOULD SOIL ENCOUNTERED AT THESE DEPTHS NOT BE APPROVED BY THE SOILS ENGINEER, FOUNDATION ELEVATIONS WILL BE ALTERED BY CHANGE ORDER.
8. FOOTING BACK FILL AND UTILITY TRENCH BACK FILL WITHIN BUILDING AREA SHALL BE MECHANICALLY COMPACTED IN LAYERS IN ACCORDANCE WITH THE CODE AND APPROVED BY THE INSPECTOR OF RECORD. FLOODING WILL NOT BE PERMITTED. ALL FILLS USED TO SUPPORT FOUNDATIONS SHALL BE INSPECTED BY THE INSPECTOR OF RECORD PER CODE SECTION 3301.
9. ALL ABANDONED FOOTINGS, UTILITIES, ETC. SHALL BE REMOVED UNLESS NOTED OTHERWISE. NEW FOOTINGS MUST BE LOCATED ON COMPACTED FILL.
10. SLABS ON GRADE SHALL BE SUPPORTED ON COMPACTED FILL.

CONCRETE

1. ALL CONCRETE CONSTRUCTION SHALL CONFORM WITH CHAPTER 19A OF THE CODE AND WITH THE PROVISIONS OF ACI 318, LATEST EDITION.
2. REINFORCED CONCRETE IS DESIGNED BY THE "ULTIMATE STRENGTH DESIGN METHOD".
3. CONCRETE MIXES SHALL BE DESIGNED BY THE APPROVED TESTING LABORATORY AND APPROVED BY THE STRUCTURAL ENGINEER. THE COMPRESSIVE STRENGTH OF THE CONCRETE SHALL BE PROPORTIONED BASED ON SECTION 1905A METHOD B OF THE CODE.
4. SCHEDULE OF STRUCTURAL CONCRETE 28-DAY STRENGTH AND TYPES:

LOCATION IN STRUCTURE	STRENGTH (PSI)	DENSITY (PCF)	W/C RATIO
ALL CONCRETE FOOTINGS, CURB	3000	150	0.50
SLAB ON GRADE	3000	150	0.45

5. PORTLAND CEMENT SHALL CONFORM TO ASTM C-150, TYPE II
6. AGGREGATE FOR HARD ROCK CONCRETE (145 PCF) SHALL CONFORM TO ALL REQUIREMENTS AND TESTS OF ASTM C-330 AND ASTM C-332 AND PROJECT SPECIFICATIONS. THE SIZE OF THE AGGREGATE SHALL BE 1".
7. CONCRETE MIXING OPERATION, ETC. SHALL CONFORM TO ASTM C-94.
8. PLACEMENT OF CONCRETE SHALL CONFORM TO CODE SECTION 1905A AND PROJECT SPECIFICATIONS. CLEAN AND ROUGHEN TO 1/4" AMPLITUDE ALL CONCRETE SURFACES AGAINST WHICH NEW CONCRETE IS TO BE PLACED.
9. ALL REINFORCING BARS, ANCHOR BOLTS AND OTHER CONCRETE INSERTS SHALL BE WELL SECURED IN POSITION PRIOR TO PLACING CONCRETE.
10. PROVIDE SLEEVES FOR PLUMBING AND ELECTRICAL OPENINGS IN CONCRETE BEFORE PLACING. DO NOT CUT ANY REINFORCING WHICH MAY CONFLICT. CORING IN CONCRETE IS NOT PERMITTED. NOTIFY THE STRUCTURAL ENGINEER IN ADVANCE OF CONDITIONS NOT SHOWN ON THE DRAWINGS. SEE THESE DRAWINGS FOR ADDITIONAL RESTRICTIONS ON THE PLACEMENT OF OPENINGS IN SLABS AND WALLS.
11. PIPES LARGER THAN 1-1/2" DIAMETER SHALL NOT BE EMBEDDED IN STRUCTURAL CONCRETE EXCEPT WHERE SPECIFICALLY APPROVED BY STRUCTURAL ENGINEER. PIPES SHALL NOT DISPLACE OR INTERRUPT REINFORCING BARS. SPACE EMBEDDED PIPES AND SLEEVES AT A MINIMUM OF 3 DIAMETERS.
12. STRIPPING OF FORMS AND SHORING SHALL BE IN ACCORDANCE WITH ACI 318.

CONSTRUCTION JOINTS

1. ALL CONSTRUCTION JOINTS SHALL BE CONSTRUCTED IN ACCORDANCE WITH CODE SECTION 1906A.4 AND THE TYPICAL CONSTRUCTION JOINT DETAILS SHOWN ON THE STRUCTURAL DRAWINGS.
2. ALL SURFACES OF CONSTRUCTION JOINTS SHALL BE CLEANED TO REMOVE DUST, CHIPS, OR OTHER FOREIGN MATTER PRIOR TO PLACING THE ADJACENT CONCRETE.
3. THE CONTRACTOR SHALL SUBMIT THE PROPOSED LOCATIONS OF CONSTRUCTION JOINTS TO THE ENGINEER FOR APPROVAL BY THE STRUCTURAL ENGINEER BEFORE STARTING CONSTRUCTION.

SPECIAL INSPECTIONS

THE FOLLOWING ELEMENTS OF CONSTRUCTION SHALL HAVE CONTINUOUS INSPECTION BY A BUILDING INSPECTOR APPROVED BY DSA.

1. ~~CONCRETE.~~
2. ~~BOLTS & EMBEDDED ITEMS INSTALLED IN CONCRETE.~~
3. ~~PLACING OF REINFORCING STEEL.~~
4. WELDING:

   ALL STRUCTURAL WELDING, INCLUDING REINFORCING STEEL. BY AN AWS CERTIFIED INSPECTOR.
5. EXPANSION ANCHORS.
6. ADHESIVE ANCHORS.

ALL SPECIAL INSPECTIONS SHALL BE PERFORMED IN ACCORDANCE WITH THE REQUIREMENTS OF SECTION 1701A OF THE CODE AND ANY ADDITIONAL REQUIREMENTS STATED IN THESE DRAWINGS AND/OR THE PROJECT SPECIFICATIONS.

STRUCTURAL NOTES

GENERAL

1. THE CONTRACTOR SHALL VERIFY ALL DIMENSIONS PRIOR TO STARTING CONSTRUCTION. THE ARCHITECT SHALL BE NOTIFIED OF ANY DISCREPANCIES OR INCONSISTENCIES.
2. ALL DRAWINGS ARE CONSIDERED TO BE A PART OF THE CONTRACT DOCUMENTS. THE CONTRACTOR SHALL BE RESPONSIBLE FOR THE REVIEW AND COORDINATION OF ALL DRAWINGS AND SPECIFICATIONS PRIOR TO THE START OF CONSTRUCTION. ANY DISCREPANCIES THAT OCCUR SHALL BE BROUGHT TO THE ATTENTION OF THE ARCHITECT PRIOR TO START OF CONSTRUCTION SO THAT A CLARIFICATION CAN BE ISSUED. ANY WORK PERFORMED IN CONFLICT WITH THE CONTRACT DOCUMENTS OR ANY CODE REQUIREMENTS SHALL BE CORRECTED BY THE CONTRACTOR AT THEIR OWN EXPENSE AND AT NO EXPENSE TO THE OWNER OR ARCHITECT.
3. NOTES AND DETAILS ON DRAWINGS SHALL TAKE PRECEDENCE OVER GENERAL NOTES AND TYPICAL DETAILS. WHERE NO DETAILS ARE GIVEN, CONSTRUCTION SHALL BE AS SHOWN FOR SIMILAR WORK.
4. ALL WORK SHALL CONFORM TO THE MINIMUM STANDARDS OF THE FOLLOWING CODES:

   THE 1998 CALIFORNIA BUILDING CODE AND THE 1998 CALIFORNIA AMENDMENTS AND LATEST REVISIONS REFFERED TO HERE AS "THE CODE", AND ANY OTHER REGULATING AGENCIES WHICH HAVE AUTHORITY OVER ANY PORTION OF THE WORK, INCLUDING THE STATE OF CALIFORNIA DIVISION OF INDUSTRIAL SAFETY, AND THOSE CODES & STANDARDS LISTED IN THESE NOTES AND SPECIFICATIONS.
5. SEE ARCHITECTURAL DRAWINGS FOR THE FOLLOWING:

   SIZE AND LOCATION OF ALL DOOR AND WINDOW OPENINGS, EXCEPT AS NOTED.

   SIZE AND LOCATION OF ALL INTERIOR AND EXTERIOR NON-BEARING PARTITIONS.

   SIZE AND LOCATION OF ALL CONCRETE CURBS, EQUIPMENT PADS, PITS, FLOOR DRAINS, SLOPES, DEPRESSED AREAS, CHANGE IN LEVEL, CHAMFERS, GROOVES, INSERTS, ETC.

   SIZE AND LOCATION OF ALL FLOOR AND ROOF OPENINGS EXCEPT AS SHOWN.

   FLOOR AND ROOF FINISHES.

   DIMENSIONS NOT SHOWN ON STRUCTURAL DRAWINGS.
6. SEE MECHANICAL, PLUMBING AND ELECTRICAL DRAWINGS FOR THE FOLLOWING:

   PIPE RUNS, SLEEVES, HANGERS, TRENCHES, WALL AND SLAB OPENINGS, ETC., EXCEPT AS SHOWN OR NOTED.

   ELECTRICAL CONDUIT RUNS, BOXES, OUTLETS IN WALLS AND SLABS.

   CONCRETE INSERTS FOR ELECTRICAL, MECHANICAL OR PLUMBING FIXTURES.

   SIZE AND LOCATION OF MACHINE OR EQUIPMENT BASES, ANCHOR BOLTS FOR MOTOR MOUNTS.
7. THE CONTRACT STRUCTURAL DRAWINGS AND SPECIFICATIONS REPRESENT THE FINISHED STRUCTURE. THEY DO NOT INDICATE THE METHOD OF CONSTRUCTION. THE CONTRACTOR SHALL PROVIDE ALL MEASURES NECESSARY TO PROTECT THE STRUCTURE DURING CONSTRUCTION. SUCH MEASURES SHALL INCLUDE, BUT NOT BE LIMITED TO, BRACING, SHORING FOR LOADS DUE TO CONSTRUCTION EQUIPMENT, ETC. OBSERVATION VISITS TO THE SITE BY THE STRUCTURAL ENGINEER SHALL NOT INCLUDE INSPECTION OF THE ABOVE ITEMS.
8. OPENINGS, POCKETS, ETC., LARGER THAN 6" SHALL NOT BE PLACED IN CONCRETE SLABS, DECKS, WALLS, UNLESS SPECIALLY DETAILED ON THE STRUCTURAL DRAWINGS. NOTIFY THE STRUCTURAL ENGINEER WHEN DRAWINGS BY OTHERS SHOW OPENINGS, POCKETS, ETC., LARGER THAN 6" NOT SHOWN ON THE STRUCTURAL DRAWINGS, BUT WHICH ARE LOCATED IN STRUCTURAL MEMBERS. FOR ANY FURTHER RESTRICTIONS ON OPENINGS IN STRUCTURAL ELEMENTS, SEE APPLICABLE SECTIONS BELOW.
9. PIPES LARGER THAN 1-1/2" DIAMETER SHALL NOT BE EMBEDDED IN STRUCTURAL CONCRETE EXCEPT WHERE SPECIFICALLY APPROVED. NO CONDUITS SHALL BE PLACED IN CONCRETE FILL OVER METAL DECKING.
10. ASTM SPECIFICATIONS ON THE DRAWINGS SHALL BE OF THE LATEST REVISION.
11. CONTRACTOR SHALL INVESTIGATE SITE DURING CLEARING AND EARTHWORK OPERATIONS FOR FILLED EXCAVATIONS OR BURIED STRUCTURES, SUCH AS CESSPOOLS, CISTERNS, FOUNDATIONS, ETC. IF ANY SUCH STRUCTURES ARE FOUND, STRUCTURAL ENGINEER SHALL BE NOTIFIED IMMEDIATELY.
12. CONSTRUCTION MATERIAL SHALL BE SPREAD OUT IF PLACED ON FRAMED ROOF OR FLOOR. LOAD SHALL NOT EXCEED THE DESIGN LIVE LOAD PER SQUARE FOOT. PROVIDE ADEQUATE SHORING AND/OR BRACING WHERE STRUCTURE HAS NOT ATTAINED DESIGN STRENGTH.
13. THE INTENT OF THE DRAWINGS AND SPECIFICATIONS IS TO CONSTRUCT THE SCHOOL BUILDING IN ACCORDANCE WITH THE 1998 EDITION OF TITLE 24, CALIFORNIA CODE OF REGULATIONS. SHOULD ANY CONDITIONS DEVELOP NOT COVERED BY THE CONTRACT DOCUMENTS WHEREIN THE FINISHED WORK WILL NOT COMPLY WITH SAID TITLE 24, CALIFORNIA CODE OF REGULATIONS, A CHANGE ORDER DETAILING AND SPECIFYING THE REQUIRED WORK SHALL BE SUBMITTED TO AND APPROVED BY DSA BEFORE PROCEEDING WITH THE WORK.
14. UNLESS SPECIFICALLY SHOWN ON THESE PLANS NO STRUCTURAL MEMBER SHALL BE CUT, NEITHER DRILLED NOR NOTCHED WITHOUT PRIOR WRITTEN AUTHORIZATION FROM THE STRUCTURAL ENGINEER AND THE DIVISION OF THE STATE ARCHITECT.

SHEET INDEX

S00.1	GENERAL NOTES
S00.2	NOTES, SYMBOLS & ABBREVIATIONS
S100	SITE PLAN
S101	CLASSROOM BUILDING C-D FOUNDATION & ROOF PLANS
S102	CLASSROOM BUILDINGS A-B, E-F & G-H ROOF FRAMING PLANS
S103	CLASSROOM BUILDING N FOUNDATION PLAN
S104	CLASSROOM BUILDING N ROOF FRAMING PLANS
S105	CLASSROOM BUILDING J-I ROOF FRAMING PLANS
S106	CLASSROOM BUILDING L-M ROOF FRAMING PLANS
S107	CLASSROOM BUILDING R FOUNDATION & ROOF FRAMING PLANS
S108	CLASSROOM BUILDING T ROOF FRAMING PLAN
S109	CLASSROOM BUILDING K ROOF FRAMING PLAN
S511	TYPICAL CONCRETE DETAILS
S512	CONCRETE DETAILS
S521	TYPICAL STEEL DETAILS
S531	TYPICAL WOOD DETAILS
S532	WOOD DETAILS
S533	WOOD DETAILS
S534	WOOD DETAILS

REVISED
IDENTIFICATION STAMP
DIV. OF THE STATE ARCHITECT
OFFICE OF REGULATION SERVICES
FILE NO. 19-H51
APPL. NO. 03-106434
AC.____ FLS.____ SS.____
DATE____
MAY 1 2 2004

Dougherty ■■ Dougherty
Architecture • Planning • Interior Design
3154-D Airport Loop Drive
Costa Mesa, CA 92626
(714) 427-0277

Copyright © 2002 Dougherty + Dougherty

kpff Consulting Engineers
9400 Toy Toyner Avenue, Suite 100
Irvine, California 92618-1939
(949) 232-1022 Fax (949) 232-6082

Architect Seal

Consultant Seal

LA MIRADA HIGH SCHOOL
MODERNIZATION - PHASE 1A
NORWALK - LA MIRADA UNIFIED SCHOOL DISTRICT
1352 ADELFA AVENUE LA MIRADA, CA 90638

GENERAL NOTES

Date:	1-30-03
Job:	12-0196
Scale:	AS NOTED
Drawn:	
Revisions:	

S001

PARA OR //	PARALLEL
PC	PRECAST
PC	PIPE COLUMN
PCF	POUNDS PER CUBIC FOOT
PCI	POUNDS PER CUBIC INCH
PLF	POUNDS PER LINEAL FOOT
PE	POLYETHYLENE, PROFESSIONAL ENGINEER
PERP OR ⊥	PERPENDICULAR
PI	PLYWOOD INDEX
ℙ	PLATE
PL	PROPERTY LINE
PLY	PLYWOOD
PLCS	PLACES
PLBG	PLUMBING
PNL	PANEL
PP	PARTIAL PENETRATION
PREFAB	PREFABRICATED
PRKG	PARKING
PROJ	PROJECT
PROP	PROPERTY
PSF	POUNDS PER SQUARE FOOT
PSI	POUNDS PER SQUARE INCH
PUN	PUNCHED
PTFE	POLYTETRAFLUORETHYLENE (TEFLON)
PVC	POLYVINYL CHLORIDE
PVMT	PAVEMENT
#	POUND; NUMBER
RAD	RADIUS
RAFT	RAFTER
RD	ROOF DRAIN
REF	REFERENCE
REG	REGULAR
REINF	REINFORCE; REINFORCING
REQ	REQUIRED
RET	RETAINING
REV	REVISION
RF	ROOF
RM	ROOM
RO	ROUGH OPENING
S	AMERICAN STANDARD SHAPE
SCHED	SCHEDULE
SECT	SECTION
SEL	SELECT
SEP	SEPARATION
SHT	SHEET
SHTG	SHEATHING
SIM	SIMILAR
SJ	SEISMIC JOINT
SLBB	SHORT LEGS BACK-TO-BACK
SPA	SPACES
SPC	STANDARD PIPE COLUMN
SPCG	SPACING
SPCL	SPECIAL
SPCS	SPACES
SPECS	SPECIFICATIONS
SQ	SQUARE
SS	SELECT STRUCTURAL
SSH	SHORT SLOTTED HOLES
ST	STRUCTURAL TEE CUT FROM S SHAPE
STAGG	STAGGER
STD	STANDARD
STIFF	STIFFENER
STIRR	STIRRUP
STL	STEEL
STRUC	STRUCTURAL
SW	SHEAR WALL
SYM	SYMMETRICAL
T	TOP
TB	TIE BEAM
T&B	TOP & BOTTOM
T&G	TONGUE & GROOVE
T/	TOP OF
TOC	TOP OF CURB
TEMP	TEMPERATURE, TEMPORARY
THK	THICK
THRU	THROUGH
TOSL	TOP OF SLAB
TN	TOE NAIL
TL	TOTAL LOAD
TOB	TOP OF BEAM
TOL	TOP OF LEDGER
TOS	TOP OF STEEL
TOSH	TOP OF SHEARWALL
TOW	TOP OF WALL
TRANSV	TRANSVERSE
TS	STRUCTURAL TUBING
TSG	TAPERED STEEL GIRDER
TYP	TYPICAL
UL	UNDERWRITERS' LABORATORY, INC.
UBC	UNIFORM BUILDING CODE
UNO	UNLESS NOTED OTHERWISE
UT	ULTRA-SONIC TEST
VERT or V	VERTICAL
W OR WF	WIDE FLANGE
W/	WITH
W/O	WITHOUT
WD	WOOD
WP	WORK POINT
WP	WATERPROOF
WT	STRUCTURAL TEE CUT FROM W SHAPE
WWF	WELDED WIRE FABRIC
WHT	WEIGHT
XS, X-STG	EXTRA STRONG

FLG	FLANGE
FN	FIELD NAIL
F'm	MASONRY COMPRESSIVE STRENGTH
FOS	FACE OF STUD
FOW	FACE OF WALL
FP	FIREPROOF; FULL PENETRATION
FRMG	FRAMING
FS	FULL SIZE; FAR SIDE
FT	FOOT; FEET
FTG	FOOTING
Fy	YIELD STRENGTH
GA	GAUGE
GB	GRADE BEAM
GC	GENERAL CONTRACTOR
GALV	GALVANIZED
GAR	GARAGE
GEN	GENERAL
GLB	GLUED LAMINATED BEAM
GND	GROUND
GR	GRADE
HD	HOLD DOWN
HDR	HEADER
HGR	HANGER
HK	HOOK
HNDCP	HANDICAPPED
HORIZ OR H	HORIZONTAL
HOSP	HOSPITAL
HP	HP SHAPE, HEAVY PILING
HR	HARD ROCK
HS	HIGH STRENGTH
HT	HEIGHT
I	MOMENT OF INERTIA
ID	INSIDE DIAMETER
i.e.	THAT IS
IF	INSIDE FACE
IN	INCH
INCL	INCLUDE, INCLUDING
INFO	INFORMATION
INSP	INSPECTION, INSPECTOR
INT	INTERIOR
INTERM	INTERMEDIATE
INV	INVERT
JST	JOIST
JT	JOINT
KIP OR K	1,000 POUNDS
KO	KNOCK-OUT
KP	KING POST
KSF	KIPS PER SQUARE FOOT
KSI	KIPS PER SQUARE INCH
LAB	LABORATORY
LBS OR #	POUND
LDGR	LEDGER
LF	LINEAL FOOT
LG	LONG
LH	LOW HYDROGEN
LIN	LINEAL; LINEAR
LL	LIVE LOAD
LLBB	LONG LEGS BACK-TO-BACK
LLH	LONG LEG HORIZONTAL
LLV	LONG LEG VERTICAL
LOCS	LOCATIONS
LONGIT	LONGITUDINAL
LP	LOW POINT
LSH	LONG SLOTTED HOLES
LTWT	LIGHTWEIGHT
LVL	LEVEL
M	MISC SHAPE
MAS	MASONRY
MAT	MATERIAL
MAX	MAXIMUM
MB	MACHINE BOLT
MC	MISCELLANEOUS CHANNEL
MECH	MECHANICAL
MEZZ	MEZZANINE
MFR	MANUFACTURER
MID	MIDDLE
MIN	MINIMUM
MISC	MISCELLANEOUS
MK	MARK
MTL	METAL
MULT	MULTIPLE
(N)	NEW
N	NORTH
NAT	NATURAL
NF	NEAR FACE
NIC	NOT IN CONTRACT
NLG	NAILING
NO. OR #	NUMBER
NS	NEAR SIDE
NTS	NOT TO SCALE
OC	ON CENTER
OD	OUTSIDE DIAMETER
OF	OUTSIDE FACE
OH	OPPOSITE HAND
OPNG	OPENING
OPP	OPPOSITE
OPNG	OPENING
OSB	ORIENTED STRAND BOARD

ABBREVIATIONS

A	AREA (IN ^{2})
AB	ANCHOR BOLT
ABV	ABOVE
ADDL	ADDITIONAL
ADJ	ADJACENT
AFF	ABOVE FINISH FLOOR
AGGR	AGGREGATE
ALT	ALTERNATE
ALUM	ALUMINUM
ANCH	ANCHOR
APPVD	APPROVED
APPROX	APPROXIMATELY
ARCH	ARCHITECTURAL; ARCHITECT
ARND	AROUND
&	AND
L	ANGLE
@	AT
BEL	BELOW
BD	BOARD
BLDG	BUILDING
BLK	BLOCK
BLKG	BLOCKING
BM	BEAM
BN	BOUNDARY NAIL
BNDRY	BOUNDARY
BOT OR B	BOTTOM
BOF	BOTTOM OF FOOTING
BRCG	BRACING
BRG	BEARING
BSMT	BASEMENT
BT	BENT
BTW	BETWEEN
BYND	BEYOND
C	AMERICAN STANDARD CHANNEL
CAM	CAMBER
CALCS	CALCULATIONS
CANT	CANTILEVER
CBC	CALIFORNIA BUILDING CODE
CC	CENTER TO CENTER
CCR	CALIFORNIA CODE OF REGULATIONS
CG	CENTER OF GRAVITY
CIP	CAST IN PLACE
CJ	CONSTRUCTION JOINT; CONTROL JOINT
℄	CENTER LINE
CLR	CLEARANCE; CLEAR
CMU	CONCRETE MASONRY UNIT
CO	COMPANY
COL	COLUMN
COMP	COMPRESSION
CONC	CONCRETE
CONN	CONNECTION; CONNECT
CONST	CONSTRUCTION
CONT	CONTINUE; CONTINUOUS
CONTR	CONTRACTOR
CP	COMPLETE PENETRATION
CTR	CENTER
CTSK	COUNTERSINK; COUNTERSUNK
CF	CUBIC FOOT
d	PENNY (NAIL OR d) $_b$
DBL	DOUBLE
DBLR	DOUBLER
DEPT	DEPARTMENT
DET	DETAIL
DF	DOUGLAS FIR
DIA OR Ø/	DIAMETER
DIAG	DIAGONAL
DIAPH	DIAPHRAGM
DIM	DIMENSION
DIR	DIRECTION
DIST	DISTANCE
DL	DEAD LOAD
DN	DOWN
DSA	DIVISION OF THE STATE ARCHITECT
DO	DITTO
DWG	DRAWING
DWL	DOWEL
(E)	EXISTING
EA	EACH
EF	EACH FACE
e.g.	FOR EXAMPLE
EJ	EXPANSION JOINT
EL	ELEVATION
ELEC	ELECTRICAL
ELEV	ELEVATOR
EMB	EMBEDDED
EN	EDGE NAIL
ENGR	ENGINEER
EOS	EDGE OF SLAB
EQ	EQUAL
EQUIP	EQUIPMENT
EQUIV	EQUIVALENT
ES	EACH SIDE
ETC	ET CETERA
EW	EACH WAY
EXIST	EXISTING
EXT	EXTERIOR
Fb	ALLOWABLE BENDING STRESS
FB	FLAT BAR
FD	FLOOR DRAIN
FDN	FOUNDATION
FF	FINISH FLOOR
FIN	FINISH
FLR	FLOOR

SYMBOLS

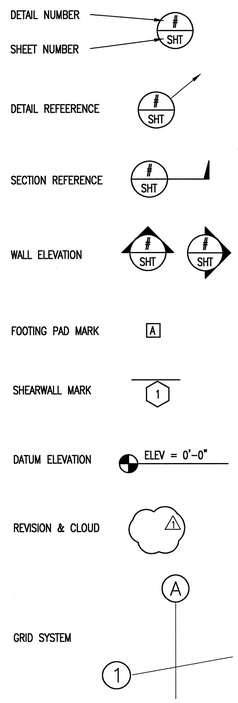

STRUCTURAL STEEL SHAPES

W	W SHAPES
S	S SHAPES
M	M SHAPES
HP	HP SHAPES
C	STD CHANNEL
MC	MISC CHANNEL
L	ANGLES
WT, ST, MT	STRUCT TEES
PIPE	STANDARD
PIPE-X	EXTRA STRONG
PIPE-XX	DBL EXTRA STRONG
TS	STRUCT TUBING

INSTITUTIONS

AWS	AMERICAN WELDING SOCIETY
ACI	AMERICAN CONCRETE INSTITUTE
AISC	AMERICAN INSTITUTE OF STEEL CONSTRUCTION
AITC	AMERICAN INSTITUTE OF TIMBER CONSTRUCTION
APA	AMERICAN PLYWOOD ASSOCIATION
ASTM	AMERICAN SOCIETY FOR TESTING AND MATERIALS
AISI	AMERICAN IRON AND STEEL INSTITUTE
PCI	PRE-CAST CONCRETE INSTITUTE
PTI	POST-TENSION CONCRETE INSTITUTE
CRSI	CONCRETE REINFORCING STEEL INSTITUTE
SJI	STEEL JOIST INSTITUTE
ANSI	AMERICAN NATIONAL STANDARDS INSTITUTE
ASTM	AMERICAN SOCIETY FOR TESTING AND MATERIALS
AWS	AMERICAN WELDING SOCIETY
AWPB	AMERICAN WOOD PRESERVERS BUREAU
ICBO	INTERNATIONAL CONFERENCE OF BUILDING OFFICIALS
DSA	DIVISION OF STATE ARCHITECTS

WOOD

1. ALL STRUCTURAL LUMBER SHALL BE DOUGLAS FIR, VISUALLY GRADED OR MACHINE GRADED UNDER THE LUMBER GRADING RULES NO. 17 OF WEST COAST LUMBER INSPECTION BUREAU. ALL FRAMING MEMBERS SHALL BE AS FOLLOWS:

THICKNESS	GRADE
4" NOM. AND SMALLER	GRADE NO. 2
LARGER THAN 4" NOM. (EXCEPT AS SHOWN ON PLANS)	GRADE NO. 1
STUDS (2x4, 2x6, 3x4 & 3x6)	GRADE NO. 2 (UNO)

2. ALL STRUCTURAL PLYWOOD SHEATHING SHALL BE DOUGLAS FIR STANDARD GRADE STRUCTURAL I WITH EXTERIOR GLUE CONFORMING TO THE LATEST EDITION OF PS 1. ALL PANELS SHALL BEAR LEGIBLE APA STAMPS. NO INDIVIDUAL PLYWOOD SHEETS SHALL BE LESS THAN 8 sq.ft IN AREA. FULL SHEETS (4'x8') SHALL BE USED WHEREVER POSSIBLE. MINIMUM SHEET DIMENSION SHALL BE 24". SHEATHING SHALL BE HELD 1/2" ABOVE DRYPACK AT ALL SILLS.
3. ALL SHEATHING SHALL BE LAID FACE GRAIN PERPENDICULAR TO FRAMING AND SHALL BE APPROVED BY THE BUILDING INSPECTOR BEFORE COVERING.
4. ALL NAILING SHALL CONFORM TO THE APPLICABLE BUILDING CODE AND REGULATIONS.
5. ALL WOOD BEARING ON CONCRETE OR MASONRY SHALL BE PRESSURE TREATED DOUGLAS FIR NO 2 MINUMUM IN ACCORDANCE WITH CODE SECTION 2306A.4. ALL CUTS, HOLES & NOTCHES SHALL BE TREATED WITH A PRESERVATIVE APPROVED BY THE STRUCTURAL ENGINEER AND THE DSA.
6. UNLESS OTHERWISE NOTED, ALL WOOD SILL PLATE UNDER BEARING, EXTERIOR OR SHEAR WALLS IN CONTACT WITH CONCRETE OR MASONRY SHALL BE BOLTED TO CONCRETE OR MASONRY WITH 5/8øX12" AT 4'-0" O.C. MAX & 9". FROM EACH END OF THE PLATES. BOLTS SHALL EXTEND A MINIMUM OF 8" INTO CONCRETE OR MASONRY. A MINIMUM OF TWO ANCHOR BOLTS SHALL BE PLACED IN ANY ONE PIECE OF SILL PLATE. THESE AND ALL ADDITIONAL REQUIREMENTS OF CODE SECTION 2306A.4 SHALL BE FOLLOWED IN THE INSTALLATION OF WALL SILL PLATES. ALL SILLS UNDER BEARING, EXTERIOR OR SHEAR WALLS SHALL BE BEDDED ON 1/2" MIN. DRY PACK OR GROUT.
7. NON-BEARING, INTERIOR, NON-SHEAR WALL SILL PLATES MAY BE FASTENED IN ACCORDANCE WITH THE REQUIREMENTS ABOVE WITH THE FOLLOWING EXCEPTIONS:
   A. SILL PLATE MAY BEAR DIRECTLY ON CONCRETE WITHOUT DRY PACK BEDDING.
   B. "RAMSET" 7/32 POWDER DRIVEN FASTENERS (ICBO# 1639) MAY BE USED INSTEAD OF ANCHOR BOLTS WHEN INSTALLED AT 1/3 BOLT SPACING OR 1'-6" O.C. MAXIMUM.
8. ALL BOLT HEADS AND NUTS WHICH BEAR AGAINST THE FACE OF WOOD MEMBERS SHALL BE PROVIDED WITH WASHERS AS SHOWN IN DETAIL 6/S4.1
9. ALL WALLS SHALL HAVE BRACING PROVIDED BY ONE OF THE METHODS REQUIRED BY CODE SECTION 2320A.II.3.
10. ALL NAILS FOR CONNECTING WOOD MEMBERS SHALL CONFORM TO SECTION 2318A OF THE CODE. ALL NAILS SHALL BE COMMON NAILS WITH A MECHANICALLY DEFORMED SHANK. MINIMUM NAILING REQUIREMENTS OUTLINED IN TABLE 23A-11-B-1 SHALL BE FOLLOWED UNLESS OTHERWISE NOTED.
11. RETIGHTEN BOLTS BEFORE CLOSING-IN.
12. USE OF MACHINE NAILING IS SUBJECT TO A SATISFACTORY JOBSITE DEMONSTRATION FOR EACH PROJECT AND THE APPROVAL BY THE PROJECT ARCHITECT OR STRUCTURAL ENGINEER AND THE DIVISION OF THE STATE ARCHITECT. THE APPROVAL IS SUBJECT TO CONTINUED SATISFACTORY PERFORMANCE. MACHINE NAILING WILL NOT BE APPROVED IN 5/16" PLYWOOD. IF NAIL HEADS PENETRATE THE OUTER PLY MORE THEN WOULD BE NORMAL FOR A HAND HAMMER OR IF MINIMUM ALLOWABLE EDGE DISTANCES ARE NOT MAINTAINED, THE PERFORMANCE WILL BE DEEMED UNSATISFACTORY AND MACHINE NAILING SHALL BE DISCONTINUED.
13. PROVIDE FULL DEPTH BLOCKING AT 4'-0" O.C. CONTINUOUS BETWEEN ADJACENT JOISTS UNDER ALL PERPENDICULAR PARTITIONS. PROVIDE DOUBLE JOIST UNDER ALL PARALLEL PARTITIONS UNLESS NOTED OTHERWISE.
14. STRUCTURAL MEMBERS SHALL NOT BE CUT FOR PIPES, CONDUIT, ETC. UNLESS SPECIFICALLY NOTED OR DETAILED FOR SUCH ALTERATIONS.
15. ROOF SHEATHING SHALL BE INSPECTED PRIOR TO PLACING INSULATION AND ROOFING.
16. SOLID BLOCKING (2x MIN.) SHALL BE PLACED BETWEEN JOISTS OR RAFTERS AT ALL SUPPORTS.
17. ALL BOLTS SHALL CONFORM TO ASTM A-307 WITH CUT THREADS, UNO.
18. ALL LAG SCREWS AND WOOD SCREWS SHALL CONFORM TO ASTM A36, Fy =45 KSI, Ftm = 77 KSI WITH CUT THREADS.
19. HOLE DIAMETERS SHALL BE AS FOLLOWS:
    SHANK PORTION- SAME DIAMETER AND LENGTH OF SHANK
    THREAD PORTION- 0.6% TO 0.75% OF DIAMETER OF THREAD AND SAME LENGTH.
20. HOLES FOR BOLTS SHALL BE BORED 1/32" TO 1/16" LARGER THAN NOMINAL BOLT DIAMETER. (THIS INCLUDES HOLES FOR BOLTS IN SILL PLATE).
21. ALL FRAMING HARDWARE SHALL BE AS MANUFACTURED BY THE SIMPSON CO.
22. ALL POST CONNECTIONS AT TOP SHALL BE SIMPSON "CC" UNLESS NOTED OR DETAILED OTHERWISE
23. ALL POST CONNECTIONS TO FOUNDATION OR SLAB SHALL BE SIMPSON "CB" UNLESS NOTED OTHERWISE.
24. ALL HOLES IN METAL STRAPS SHALL BE FILLED WITH NAILS UNLESS NOTED OTHERWISE.

IDENTIFICATION STAMP
DIV. OF THE STATE ARCHITECT
OFFICE OF REGULATION SERVICES
FILE NO. 19-H51
APPL. NO. 03-106434
AC. FLS SS
DATE JAN 30 2003

Dougherty ■ Dougherty
Architecture · Planning · Interior Design
3194-D Airport Loop Drive
Costa Mesa, CA 92626
(714) 427-0277

Copyright © 2002 Dougherty + Dougherty

kpff Consulting Engineers
9400 Irvine Avenue, Suite 100
Irvine, California 92618-1919
(949) 250-0202 Fax (949) 250-0082

REGISTERED ARCHITECT
NO. C-9824
STATE OF CALIFORNIA
Architect Seal

REGISTERED PROFESSIONAL ENGINEER
No. 35209
STATE OF CALIFORNIA
Consultant Seal

LA MIRADA HIGH SCHOOL
MODERNIZATION - PHASE 1A
NORWALK - LA MIRADA UNIFIED SCHOOL DISTRICT
1352 ADELFA AVENUE LA MIRADA, CA 90638

SYMBOLS & ABBREVIATIONS

Date:	1-30-03
Job:	12-0196
Scale:	AS NOTED
Drawn:	
Revisions:	

S002

NOTES:							
JOB #	JOB NAME	FILE PATH & NAME	PLOTTED DATE & TIME	UPDATED BY	PLOT SCALE	PROG.MG.	DRAFTER
12-0196	LA MIRADA HIGH	I:\PROJECTS\2002\12-0196\S002.DWG	JAN. 29, 2003 11:25:26 PM	---	1=1	B.T.	F.C.

XREFS: a2019dTB; xaSTMP; ie

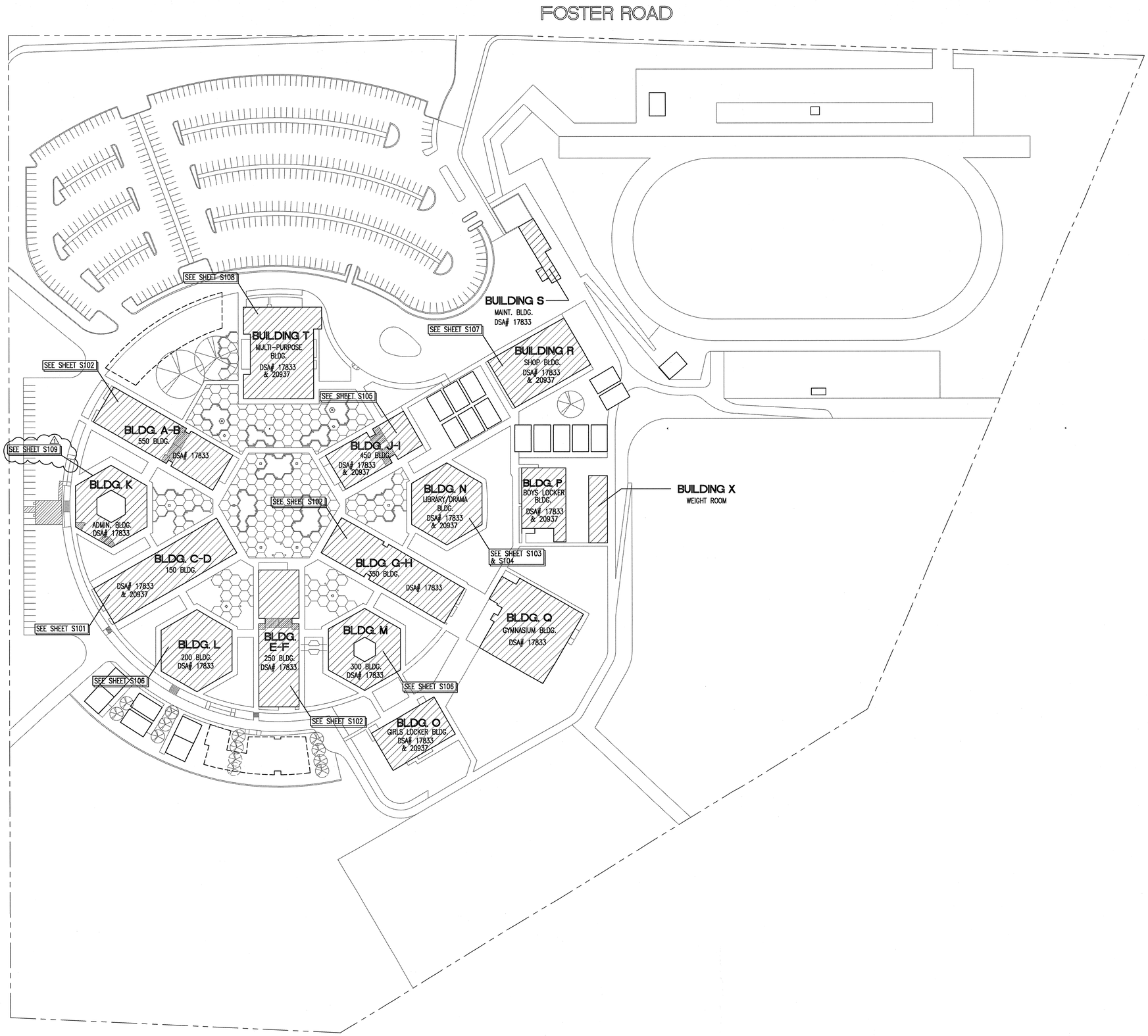

SITE PLAN

1
1"=60'

KEYNOTES

KEY PLAN

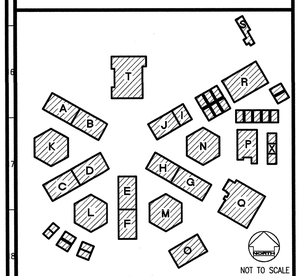

REVISED
MAY 1 2 2004

IDENTIFICATION STAMP
DIV. OF THE STATE ARCHITECT
OFFICE OF REGULATION SERVICES
FILE NO. 19-H51
APPL. NO. 03-106434
AC. ____ FLS. ____ SS. ____
DATE ____

Dougherty + Dougherty
Architecture · Planning · Interior Design
3165 Airport Loop Drive
Costa Mesa, CA 92626
(714) 427-0277

Copyright © 2002 Dougherty + Dougherty

kpff Consulting Engineers
8400 Yen Center Avenue, Suite 100
Irvine, California 92618-2030
(949) 206-1000 Fax (949) 250-9082

Architect Seal

Consultant Seal

LA MIRADA HIGH SCHOOL MODERNIZATION - PHASE 1A

NORWALK - LA MIRADA UNIFIED SCHOOL DISTRICT
13352 ADELFA AVENUE LA MIRADA, CA 90638

SITE PLAN

Date:	1-30-03
Job:	12-0196
Scale:	AS NOTED
Drawn:	
Revisions:	
1	12-01-03

S100

JOB #	JOB NAME	FILE PATH & NAME	PLOTTED DATE & TIME	UPDATED BY	PLOT SCALE	PROG.MG.	DRAFTER
12-0196	LA MIRADA HIGH	L:\PROJECTS\2002\12-0196\S100.DWG	JAN. 30, 2003 12:19:18 AM	----	1=1	B.T.	F.C.

NOTES:
XREFS: a20196TB, xKEY, a20095,

SITE PLAN

1
1"=60'

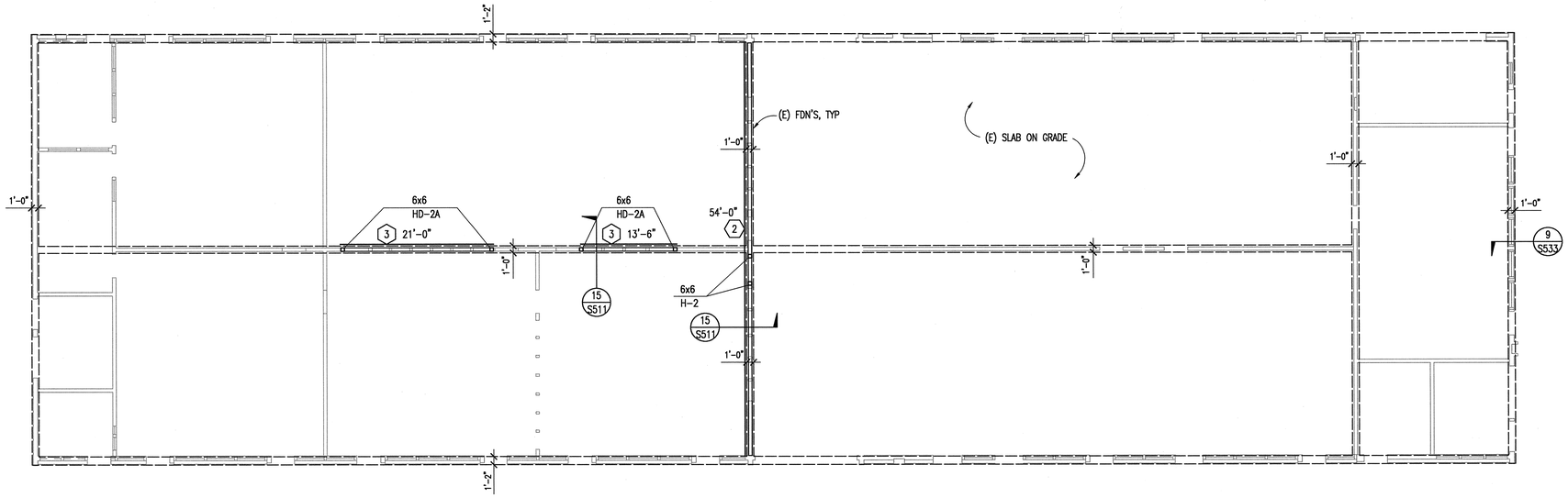

BUILDING C-D FOUNDATION PLAN

550 BUILDING

1 — 1/8"=1'-0"

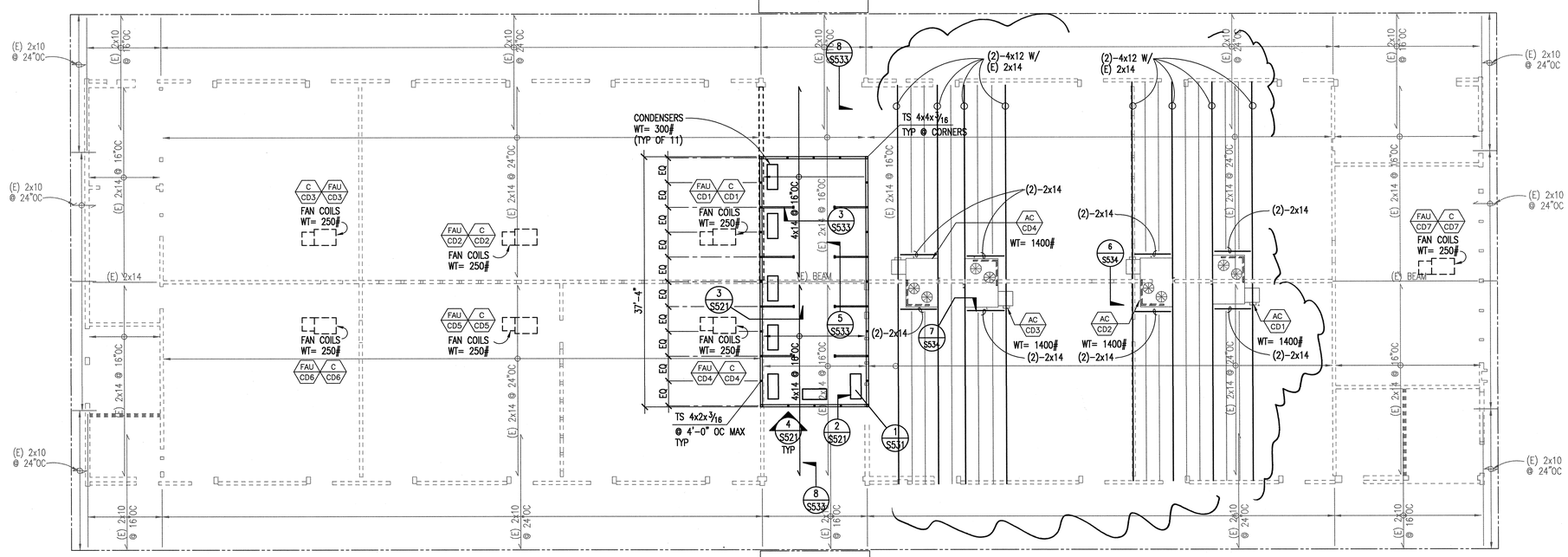

BUILDING C-D ROOF PLAN

150 BUILDING

2 — 1/8"=1'-0"

PLAN NOTES

NOTES:

1. FOR GENERAL NOTES SEE SHEET S001 & S002.
2. FOR TYPICAL CONCRETE DETAILS, SEE SHEETS S511 & S512.
3. FOR TYPICAL STEEL DETAILS, SEE SHEET S521.
4. FOR TYPICAL WOOD DETAILS, SEE SHEETS S531 THRU S534.
5. CONTRACTOR TO VERIFY ALL DIMENSIONS AND ELEVATIONS PRIOR TO COMENSEMENT OF WORK.
6. REFER TO ARCHITECTURAL DRAWINGS FOR CURBS, RAMPS, DRAINS, EXTERIOR SLABS, PITS, SWALES, TRENCHES, OPENINGS, ETC..
7. FOR TYPICAL WALL FRAMING, SEE DETAILS ON SHEET S531.
8. ALL FRAMING IS NEW UNLESS NOTED AS EXISTING (E).
9. SEE DETAIL 8/S532 FOR SUSPENDED MECH UNITS.
10. FOR MECH ANCHORAGE SEE DETAIL 1/S531.
11. SEE 1/S534 FOR NON-BEARING WALL FRAMING ELEVATION.
12. FOR WINDOW AND DOOR INFILLS SEE DETAILS 12/S533 AND 4/S534

LEGEND:

6x6 / HD-2A — INDICATES COLUMN OR POST SIZE AND HOLDOWN SIZE.

1 7'-0" — INDICATES PLYWOOD SHEATHED SHEAR WALL & NOMINAL LENGTH. SEE DETAIL 7/S531.

KEY PLAN

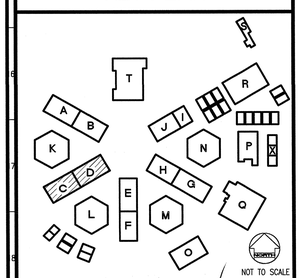

NOT TO SCALE

REVISED MAY 1 2 2004

IDENTIFICATION STAMP
DIV. OF THE STATE ARCHITECT
OFFICE OF REGULATION SERVICES
FILE NO. 19-H51
APPL. NO. 03-106434
AC. ___ FLS ___ SS ___
DATE ___

Dougherty ■ Dougherty
Architecture · Planning · Interior Design
7194-D Arnold Lane Drive
Cypress, California 92630
(714) 527-0277

Copyright © 2002 Dougherty + Dougherty

kpff Consulting Engineers
8400 Yorba Linda Avenue, Suite 100
Fontana, California 92335-2639
(949) 252-9222 Fax (949) 252-9262

Architect Seal

Consultant Seal

LA MIRADA HIGH SCHOOL MODERNIZATION - PHASE 1A

NORWALK - LA MIRADA UNIFIED SCHOOL DISTRICT
1352 ADELFA AVENUE LA MIRADA, CA 90638

CLASSROOM BUILDINGS & C-D FDN & ROOF PLANS

Date:	1-30-03
Job:	12-0196
Scale:	AS NOTED
Drawn:	
Revisions:	

S101

JOB NAME	FILE PATH & NAME	PLOTTED DATE & TIME	UPDATED BY	PLOT SCALE	PROG.MG.	DRAFTER
LA MIRADA HIGH	I:\PROJECTS\2002\12-0196\S101.DWG	MAR. 29, 2004 4:10:50 PM	---	1=1	B.T.	F.C.

NOTES:
JOB #
12-0196
XREFS: XC202375, X-C-D-FP, 12096TB, xxXFS

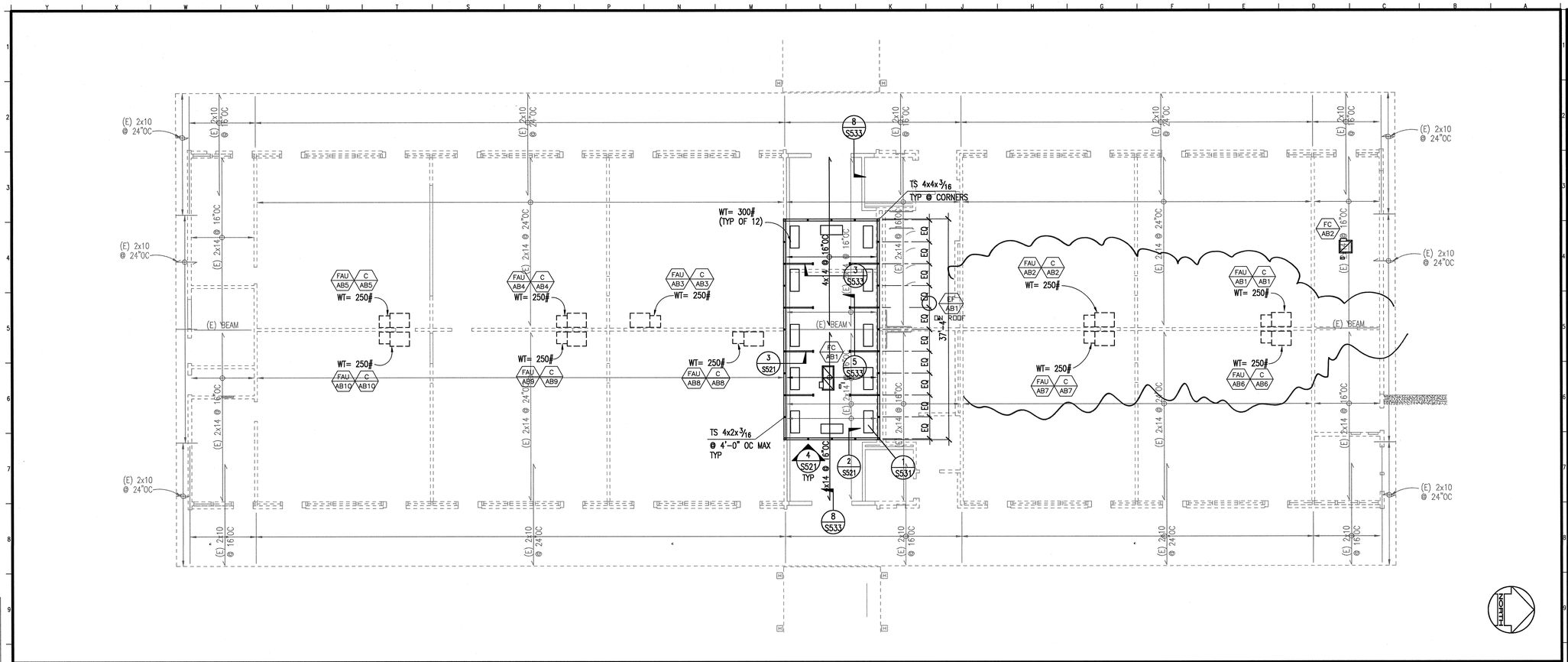

BUILDING A-B AND E-F ROOF FRAMING PLAN

250 BUILDING

1 — 1/8"=1'-0"

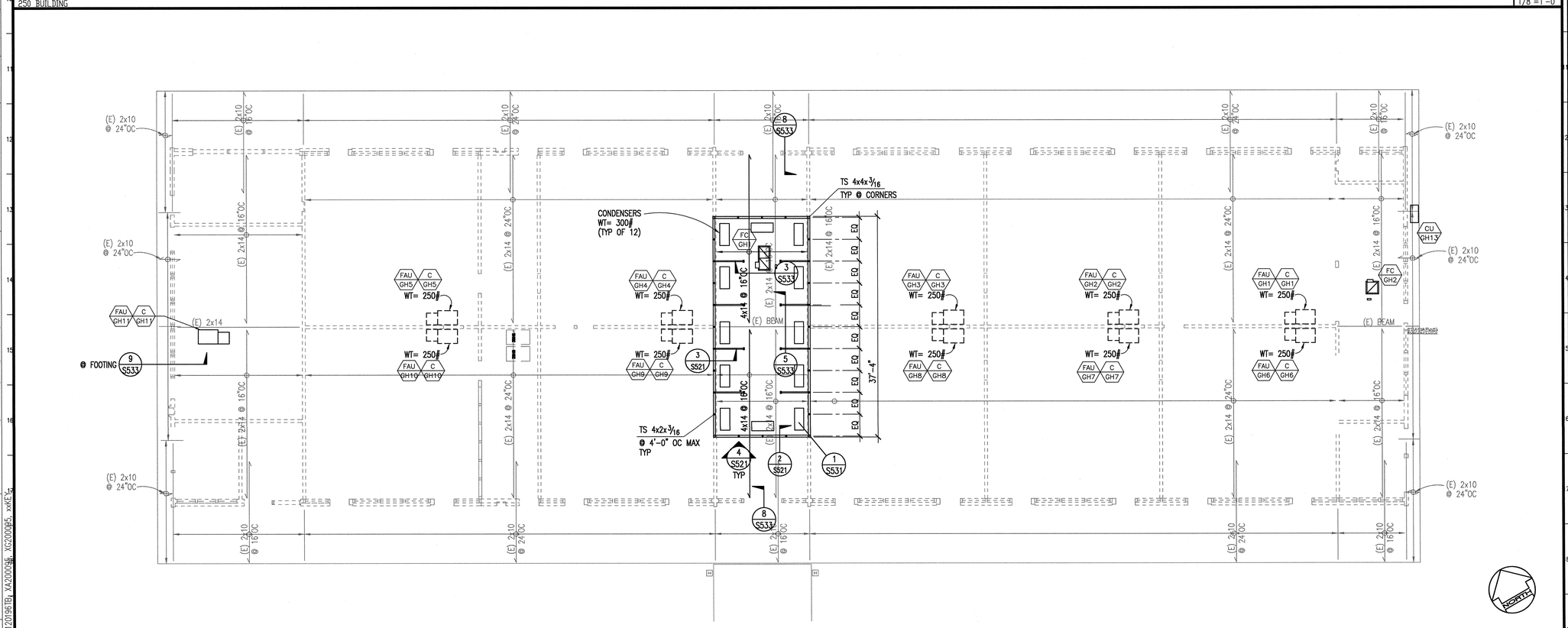

BUILDING G-H ROOF FRAMING PLAN

350 BUILDING

2 — 1/8"=1'-0"

PLAN NOTES

NOTES:

1. FOR GENERAL NOTES SEE SHEET S001 & S002.
2. FOR TYPICAL CONCRETE DETAILS, SEE SHEETS S511 & S512.
3. FOR TYPICAL STEEL DETAILS, SEE SHEET S521.
4. FOR TYPICAL WOOD DETAILS, SEE SHEETS S531 THRU S534.
5. CONTRACTOR TO VERIFY ALL DIMENSIONS AND ELEVATIONS PRIOR TO COMENSEMENT OF WORK.
6. REFER TO ARCHITECTURAL DRAWINGS FOR CURBS, RAMPS, DRAINS, EXTERIOR SLABS, PITS, SWALES, TRENCHES, OPENINGS, ETC..
7. FOR TYPICAL WALL FRAMING, SEE DETAILS ON SHEET S531.
8. ALL FRAMING IS NEW UNLESS NOTED AS EXISTING (E).
9. SEE DETAIL 8/S532 FOR SUSPENDED MECH UNITS.
10. FOR MECH ANCHORAGE SEE DETAIL 1/S531.
11. SEE 1/S534 FOR NON-BEARING WALL FRAMING ELEVATION.
12. FOR WINDOW AND DOOR INFILLS SEE DETAILS 12/S533 AND 4/S534

LEGEND:

6x6 HD-24 — INDICATES COLUMN OR POST SIZE AND HOLDOWN SIZE.

1 7'-0" — INDICATES PLYWOOD SHEATHED SHEAR WALL & NOMINAL LENGTH. SEE DETAIL 7/S531.

KEY PLAN

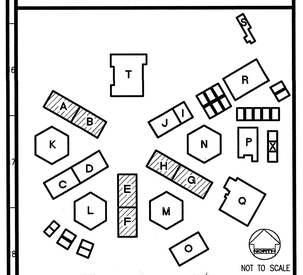

NOT TO SCALE

REVISED MAY 12 2004

IDENTIFICATION STAMP
DIV. OF THE STATE ARCHITECT
OFFICE OF REGULATION SERVICES
FILE NO. 19-H51
APPL. NO. 03-106434
AC___ FLS___ SS___
DATE___

Dougherty Dougherty
Architecture · Planning · Interior Design
1194-D Airport Loop Drive
Costa Mesa, CA 92626
(714) 427- 0277

Copyright © 2002 Dougherty + Dougherty

kpff Consulting Engineers
8400 Von Karman Avenue, Suite 100
Irvine, California 92612
(949) 252-9222 Fax (949) 252-9282

Architect Seal

Consultant Seal

LA MIRADA HIGH SCHOOL
MODERNIZATION - PHASE 1A
NORWALK - LA MIRADA UNIFIED SCHOOL DISTRICT
13352 ADELFA AVENUE LA MIRADA, CA 90638

CLASSROOM BLDG
A-B, E-F & G-H
ROOF FRAMING PLANS

Date:	1-30-03
Job:	12-0196
Scale:	AS NOTED
Drawn:	
Revisions:	

S102

NOTES:

JOB #	JOB NAME	FILE PATH & NAME	PLOTTED DATE & TIME	UPDATED BY	PLOT SCALE	PROG.MG.	DRAFTER
12-0196	LA MIRADA HIGH	L:\PROJECTS\2002\12-0196\S102.DWG	DEC. 22, 2003 3:54:48 PM		1=1	B.T.	F.C.

XREFS: 12019BTB; XA200085; XG200085; xxXE1

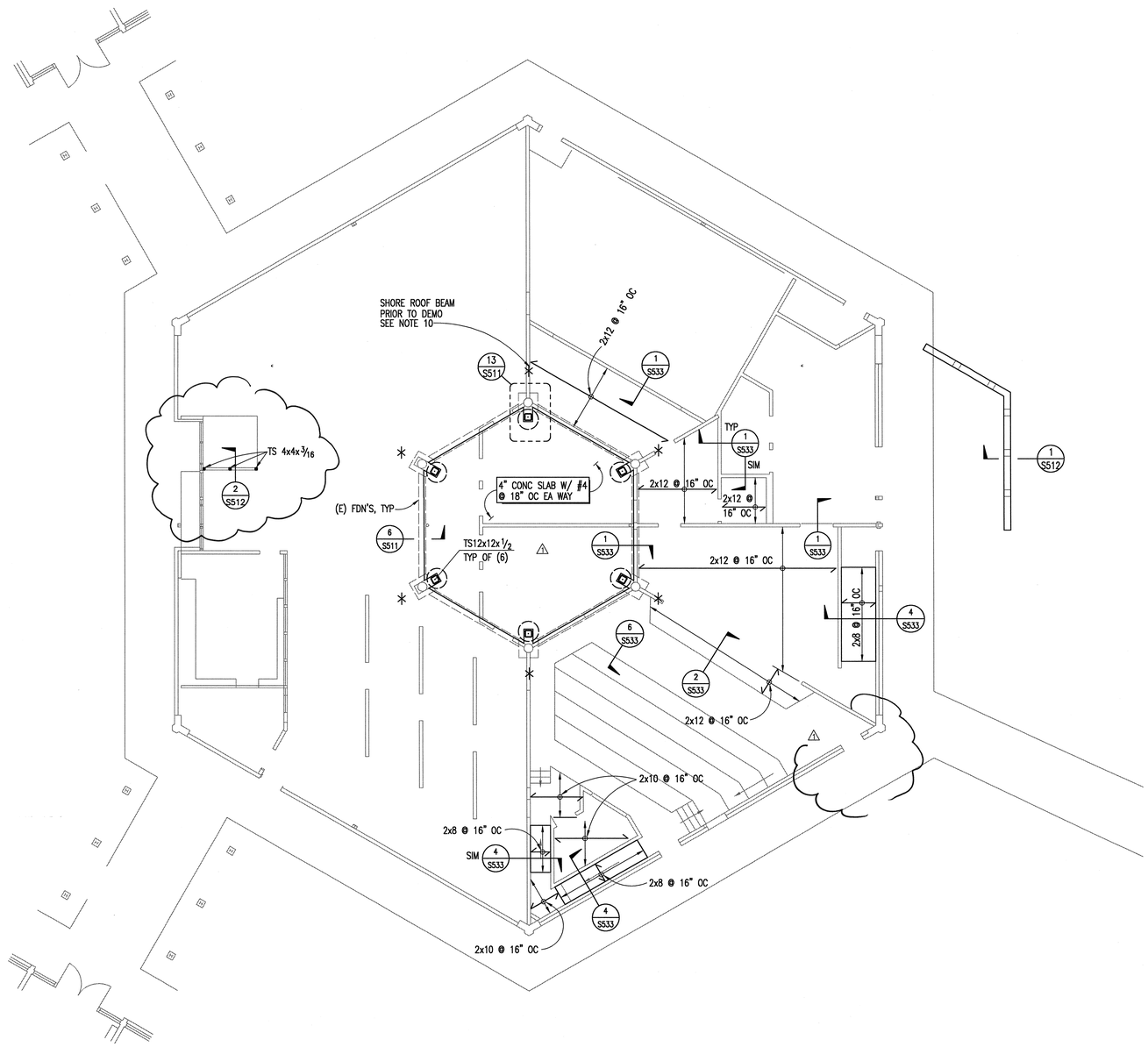

PLAN NOTES

NOTES:

1. FOR GENERAL NOTES SEE SHEET S001 & S002.
2. FOR TYPICAL CONCRETE DETAILS, SEE SHEETS S511 & S512.
3. FOR TYPICAL STEEL DETAILS, SEE SHEET S521.
4. FOR TYPICAL WOOD DETAILS, SEE SHEETS S531 THRU S534.
5. CONTRACTOR TO VERIFY ALL DIMENSIONS AND ELEVATIONS PRIOR TO COMENSEMENT OF WORK.
6. REFER TO ARCHITECTURAL DRAWINGS FOR CURBS, RAMPS, DRAINS, EXTERIOR SLABS, PITS, SWALES, TRENCHES, OPENINGS, ETC..
7. FOR TYPICAL WALL FRAMING, SEE DETAILS ON SHEET S531.
8. CENTER CONTINUOUS FOOTINGS ON WALLS AND COLUMN GRID LINES U.N.O..
9. ALL FRAMING IS NEW UNLESS NOTED AS EXISTING (E).
10. ✳ INDICATES LOCATION WHERE SHORING IS REQUIRED PRIOR TO DEMO AND FOOTING INSTALLATION (TYP (6) LOCATIONS) (SHORING LOAD = 17k)
11. SEE DETAIL 1/S534 FOR INTERIOR NON-BEARING WALL FRAMING ELEVATION.
12. SEE DETAIL 3/S531 FOR EXTERIOR WALL FRAMING ELEVATION.
13. FLOOR SHEATHING SHALL BE 3/4" STRUCT 1 PLYWOOD W/: 10d @ 6" OC BN, @ 6" OC EN & 12" OC FN W/ 2x FLAT BLOCKING.
14. FOR DOOR INFILLS SEE DETAIL 4/S533
15. SEE DETAIL 12/S533 FOR WINDOW INFILLS.

KEY PLAN

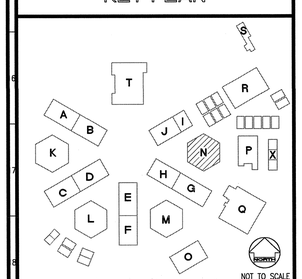

REVISED

IDENTIFICATION STAMP
DIV. OF THE STATE ARCHITECT
OFFICE OF REGULATION SERVICES
FILE NO. 19-H51
APPL. NO. 03-106434
AC.____ FLS.____ SS.____
DATE_____

MAY 1 2 2004

Dougherty ■ Dougherty
Architecture · Planning · Interior Design
3194-D Airport Loop Drive
Costa Mesa, CA 92626
(714) 427-0277

Copyright © 2002 Dougherty + Dougherty

kpff Consulting Engineers
8400 Von Karman Avenue, Suite 100
Irvine, California 92612-1238
(949) 252-1022 Fax (949) 250-9282

Architect Seal

Consultant Seal

LA MIRADA HIGH SCHOOL
MODERNIZATION - PHASE 1A
NORWALK - LA MIRADA UNIFIED SCHOOL DISTRICT
13352 ADELFA AVENUE LA MIRADA, CA 90638

CLASSROOM
BUILDING N
FOUNDATION PLAN

Date:	1-30-03
Job:	12-0196
Scale:	AS NOTED
Drawn:	
Revisions:	
1	12-01-03

S103

NOTES:

JOB #	JOB NAME	FILE PATH & NAME	PLOTTED DATE & TIME	UPDATED BY	PLOT SCALE	PROG.MG.	DRAFTER
12-0196	LA MIRADA HIGH	L:\PROJECTS\2002\12-0196\S103.DWG	JAN. 29, 2003 10:19:47 PM	----	1=1	B.T.	F.C.

XREF'S: a2019BTB, XN2000Bg, xxKEY, 1

BUILDING N FOUNDATION PLAN
LIBRARY/DRAMA BUILDING

1
1/8"=1'-0"

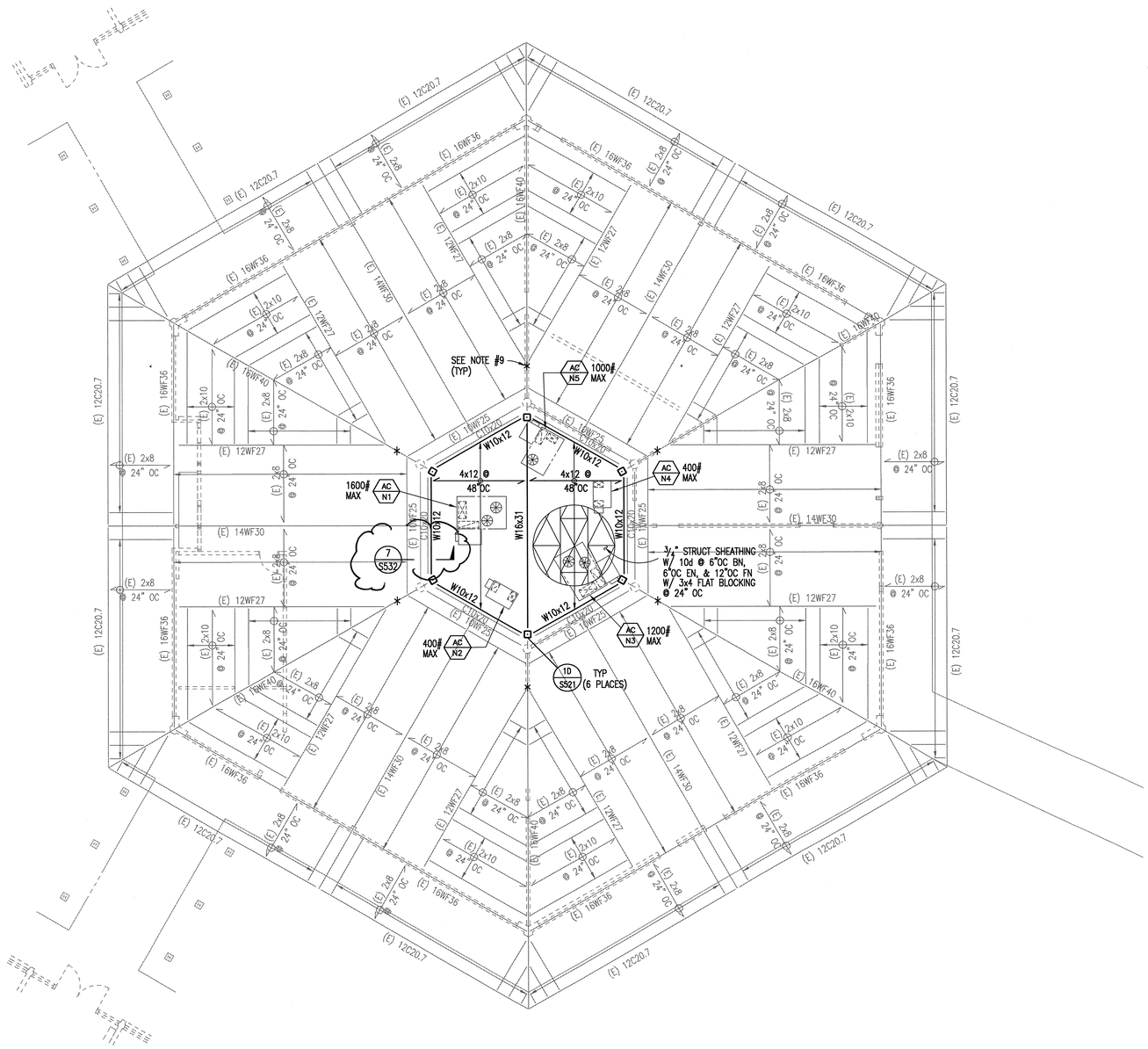

PLAN NOTES

NOTES:

1. FOR GENERAL NOTES SEE SHEET S001 AND S002.
2. FOR TYPICAL CONCRETE DETAILS, SEE SHEETS S511 & S512.
3. FOR TYPICAL STEEL DETAILS, SEE SHEET S521.
4. FOR TYPICAL WOOD DETAILS, SEE SHEETS S531 THRU S534.
5. CONTRACTOR TO VERIFY ALL DIMENSIONS AND ELEVATIONS PRIOR TO COMENSEMENT OF WORK.
6. REFER TO ARCHITECTURAL DRAWINGS FOR CURBS, RAMPS, DRAINS, EXTERIOR SLABS, PITS, SWALES, TRENCHES, OPENINGS, ETC..
7. FOR TYPICAL WALL FRAMING, SEE DETAILS ON SHEET S531.
8. ALL FRAMING IS NEW UNLESS NOTED AS EXISTING (E).
9. * INDICATES LOCATION WHERE SHORING IS REQUIRED PRIOR TO DEMO AND FOOTING INSTALLATION (TYP (6) LOCATIONS) (SHORING LOAD = 17k)
10. FOR MECHANICAL ANCHORAGE SEE 2/S531.

KEY PLAN

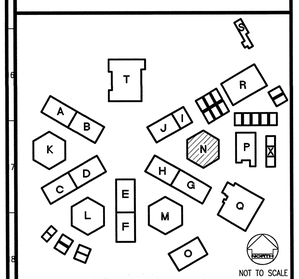

REVISED MAY 12 2004

IDENTIFICATION STAMP
DIV. OF THE STATE ARCHITECT
OFFICE OF REGULATION SERVICES
FILE NO. 19-H51
APPL. NO. 03-106434
AC.____ FLS.____ SS.____
DATE____

Dougherty ■■ Dougherty
Architecture · Planning · Interior Design
3194-D Airport Loop Drive
Costa Mesa, CA 92626
(714) 427-0277

Copyright © 2002 Dougherty + Dougherty

kp11 Consulting Engineers
8400 Von Karman Avenue, Suite 100
Irvine, California 92612-638
(949) 252-0202 / Fax (949) 250-9202

Architect Seal

Consultant Seal

LA MIRADA HIGH SCHOOL
MODERNIZATION - PHASE 1A
NORWALK - LA MIRADA UNIFIED SCHOOL DISTRICT
1352 ADELFA AVENUE LA MIRADA, CA 90638

CLASSROOM
BUILDING N
ROOF FRAMING PLAN

Date:	1-30-03
Job:	12-0196
Scale:	AS NOTED
Drawn:	
Revisions:	

S104

JOB #	JOB NAME	FILE PATH & NAME	PLOTTED DATE & TIME	UPDATED BY	PLOT SCALE	PROG.MG.	DRAFTER
12-0196	LA MIRADA HIGH	I:\PROJECTS\2002\12-0196\S104.DWG	DEC. 22, 2003 2:35:05 PM	---	1=1	B.T.	F.C.

NOTES:
XREFS: 120196TB, XN120096S, xxXEF, 1

BUILDING N ROOF FRAMING PLAN
LIBRARY/DRAMA BUILDING

1
1/8"=1'-0"

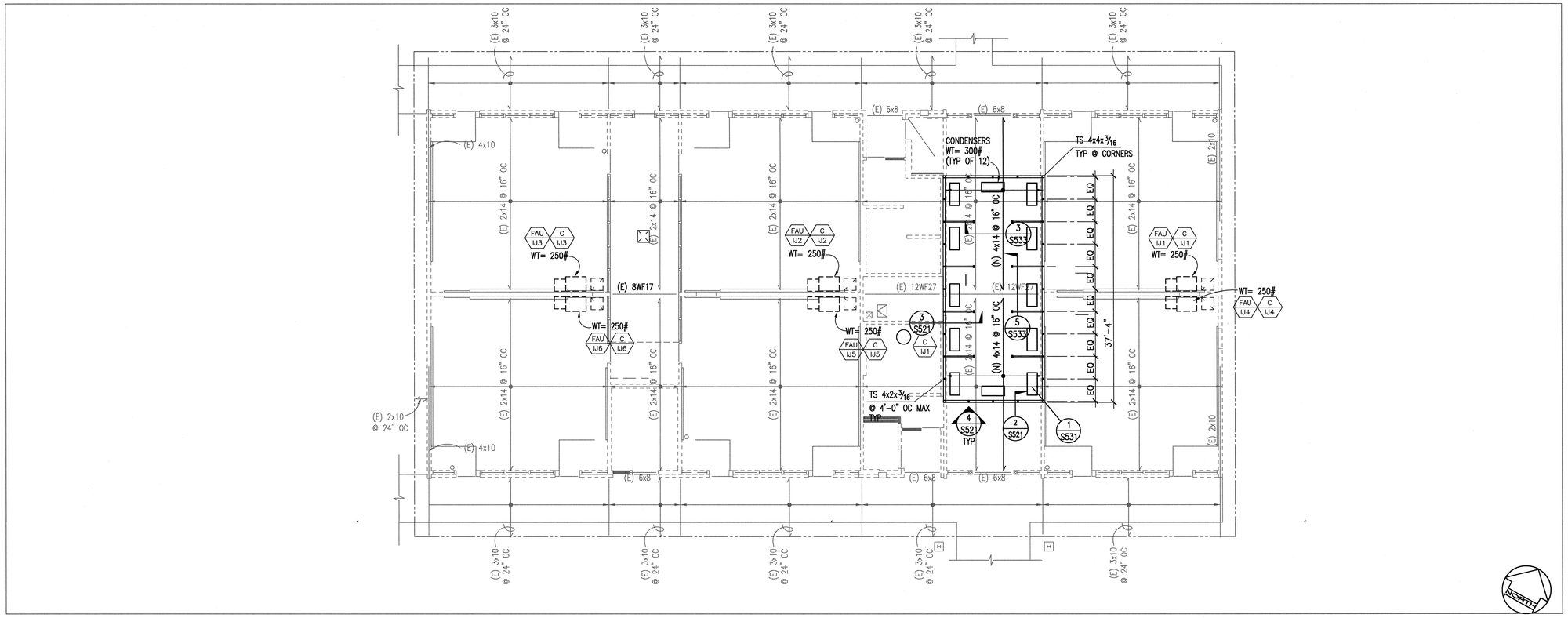

BUILDING J-I ROOF FRAMING PLAN

BUILDING

1

1/8"=1'-0"

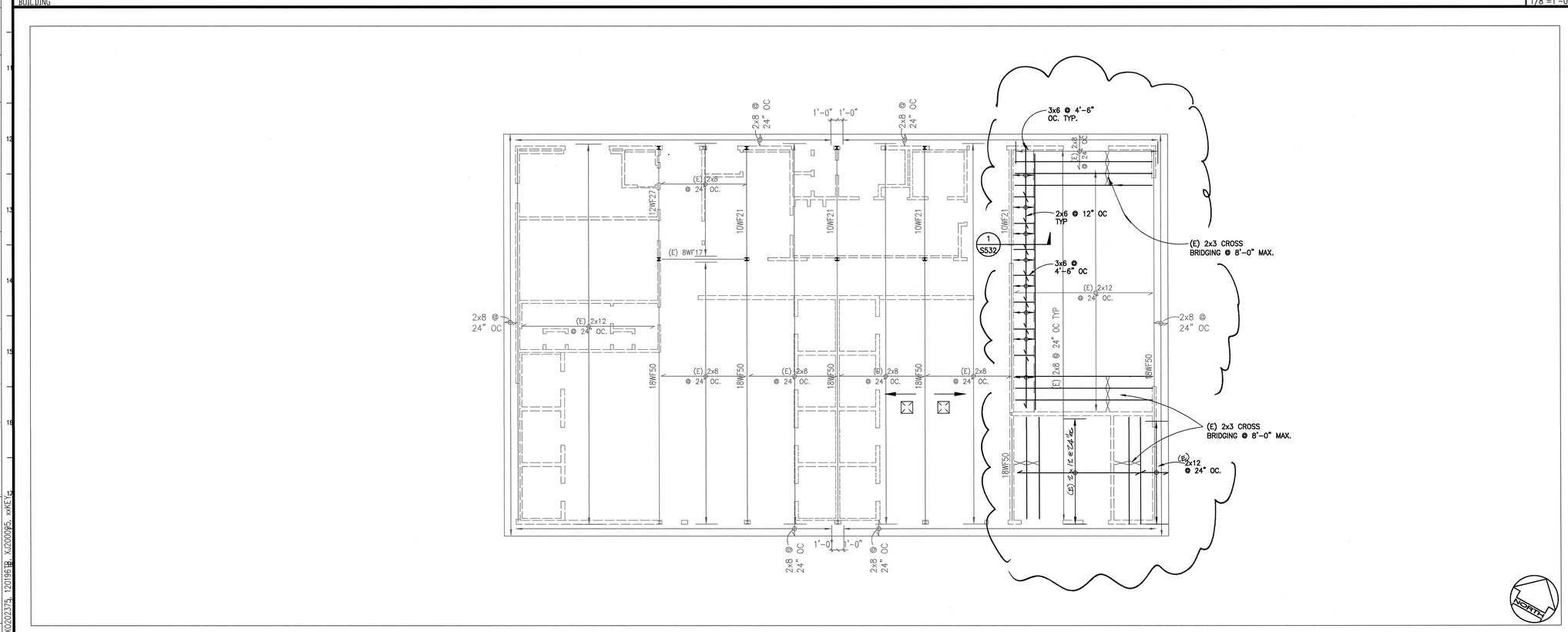

BUILDING O ROOF FRAMING PLAN

BUILDING

2

1/8"=1'-0"

NOTES:

1. FOR GENERAL NOTES SEE SHEET S001 & S002.
2. FOR TYPICAL CONCRETE DETAILS, SEE SHEETS S511 & S512.
3. FOR TYPICAL STEEL DETAILS, SEE SHEET S521.
4. FOR TYPICAL WOOD DETAILS, SEE SHEETS S531 THRU S534.
5. CONTRACTOR TO VERIFY ALL DIMENSIONS AND ELEVATIONS PRIOR TO COMENSEMENT OF WORK.
6. REFER TO ARCHITECTURAL DRAWINGS FOR CURBS, RAMPS, DRAINS, EXTERIOR SLABS, PITS, SWALES, TRENCHES, OPENINGS, ETC..
7. FOR TYPICAL WALL FRAMING, SEE DETAILS ON SHEET S531.
8. ALL FRAMING IS NEW UNLESS NOTED AS EXISTING (E).
9. SEE DETAIL 8/S532 FOR SUSPENDED MECH UNITS.
10. FOR MECH ANCHORAGE SEE DETAIL 1/S531.
11. SEE 1/S534 FOR NON-BEARING WALL FRAMING ELEVATION.

KEY PLAN

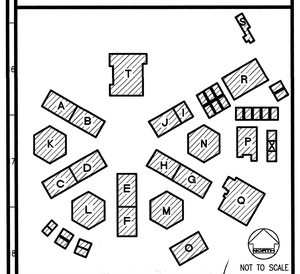

NOT TO SCALE

REVISED MAY 12 2004

IDENTIFICATION STAMP
DIV. OF THE STATE ARCHITECT
OFFICE OF REGULATION SERVICES
FILE NO. 19-H51
APPL. NO. 03-106434
AC.____ FLS.____ SS.____
DATE____

Dougherty + Dougherty
Architecture · Planning · Interior Design
3194-D Airport Loop Drive
Costa Mesa, CA 92626
(714) 427-0277

Copyright © 2002 Dougherty + Dougherty

kpff Consulting Engineers
8400 Von Karman Avenue, Suite 100
Irvine, California 92612-1019
(949) 252-1022 Fax (949) 252-0582

REGISTERED PROFESSIONAL ENGINEER
NO. C-36214
EXP. JULY 31, 2004
STATE OF CALIFORNIA
Architect Seal

REGISTERED PROFESSIONAL ENGINEER
NO. M 36420
EXP. 6/30/05
STATE OF CALIFORNIA
Consultant Seal

LA MIRADA HIGH SCHOOL
MODERNIZATION - PHASE 1A
NORWALK - LA MIRADA UNIFIED SCHOOL DISTRICT
13352 ADELFA AVENUE LA MIRADA, CA 90638

CLASSROOM BLDGS
J-I & O
ROOF FRAMING PLANS

Date: 1-30-03
Job: 12-0196
Scale:
Drawn:
Revisions:

S105

JOB #	JOB NAME	FILE PATH & NAME	PLOTTED DATE & TIME	UPDATED BY	PLOT SCALE	PROG.MG.	DRAFTER
12-0196	LA MIRADA HIGH	L:\PROJECTS\2002\12-0196\S105.DWG	MAR. 29, 2004 5:24:54 PM	---	1=1	B.T.	F.C.

XREFS: x02023T5, 120196B, XJ200095, xxXE1

NOTES:

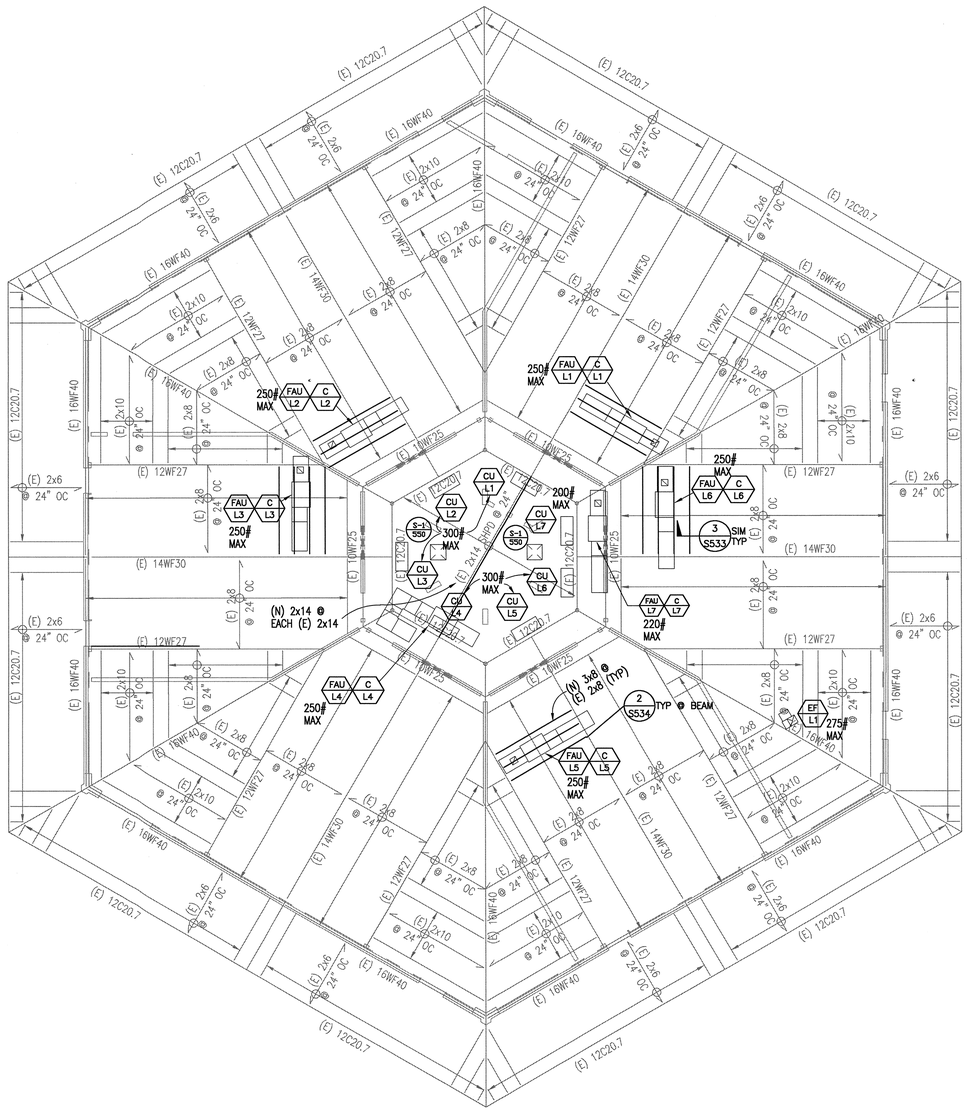

BUILDING L ROOF FRAMING PLAN

200 BUILDING — 2 — 1/8"=1'-0"

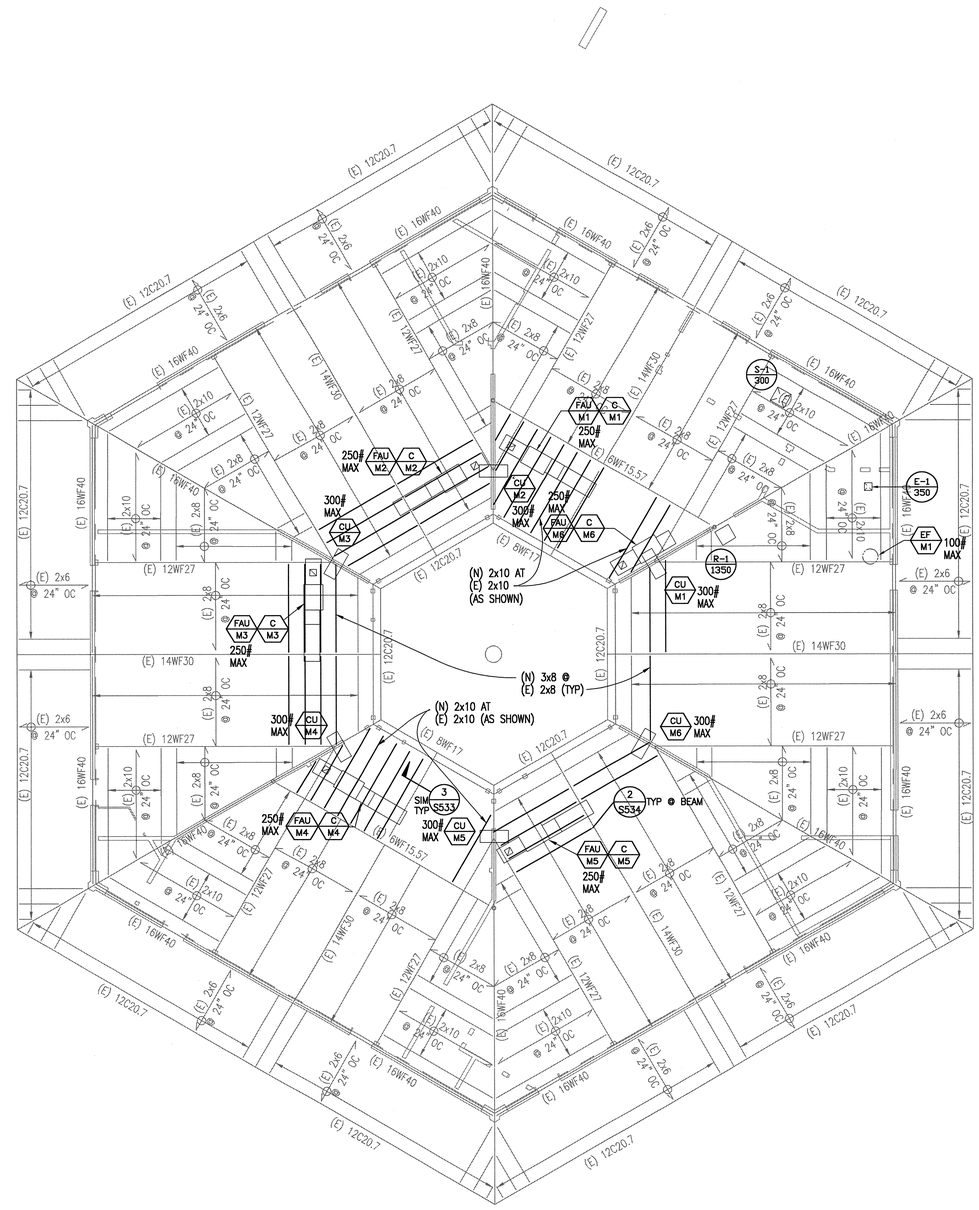

BUILDING M ROOF FRAMING PLAN

300 BUILDING — 1 — 1/8"=1'-0"

PLAN NOTES

NOTES:

1. FOR GENERAL NOTES SEE SHEET S001.
2. FOR TYPICAL CONCRETE DETAILS, SEE SHEETS S511 & S512.
3. FOR TYPICAL STEEL DETAILS, SEE SHEET S521.
4. FOR TYPICAL WOOD DETAILS, SEE SHEETS S531 THRU S534.
5. CONTRACTOR TO VERIFY ALL DIMENSIONS AND ELEVATIONS PRIOR TO COMENSEMENT OF WORK.
6. REFER TO ARCHITECTURAL DRAWINGS FOR CURBS, RAMPS, DRAINS, EXTERIOR SLABS, PITS, SWALES, TRENCHES, OPENINGS, ETC..
7. ALL FRAMING IS NEW UNLESS NOTED AS EXISTING (E).
8. FOR ROOF MOUNTED AND SUSPENDED MECH UNITS SEE DETAILS 2/S531 AND 8/S532.

KEY PLAN

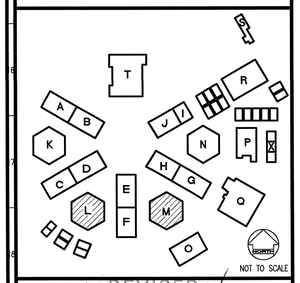

REVISED MAY 1 2 2004

IDENTIFICATION STAMP
DIV. OF THE STATE ARCHITECT
OFFICE OF REGULATION SERVICES
FILE NO. 19-H51
APPL. NO. 03-106434
AC.____ FLS.____ SS.____
DATE:

Dougherty ■ Dougherty
Architecture · Planning · Interior Design
3194-D Airport Loop Drive
Costa Mesa, CA 92626
(714) 427-0277

Copyright © 2002 Dougherty + Dougherty

kpff Consulting Engineers
9400 Ivy Glen Avenue, Suite 100
Irvine, California 92612-1293
(949) 252-1222 Fax: (949) 252-0182

Architect Seal

Consultant Seal

LA MIRADA HIGH SCHOOL MODERNIZATION - PHASE 1A

NORWALK - LA MIRADA UNIFIED SCHOOL DISTRICT
1352 ADELFA AVENUE LA MIRADA, CA 90638

CLASSROOM BUILDINGS L & M ROOF FRAMING PLANS

Date:	1-30-03
Job:	12-0196
Scale:	AS NOTED
Drawn:	
Revisions:	
1	12-01-03

S106

NOTES:					
JOB #	JOB NAME	FILE PATH & NAME	PLOTTED DATE & TIME	UPDATED BY	PLOT SCALE	PROG.MG.	DRAFTER
12-0196	LA MIRADA HIGH	L:\PROJECTS\2002\12-0196\S106.DWG	JAN. 29, 2003 10:23:19 PM	---	1=1	B.T.	F.C.

XREFS: M200095, 120196B, XXREF1, XL200095

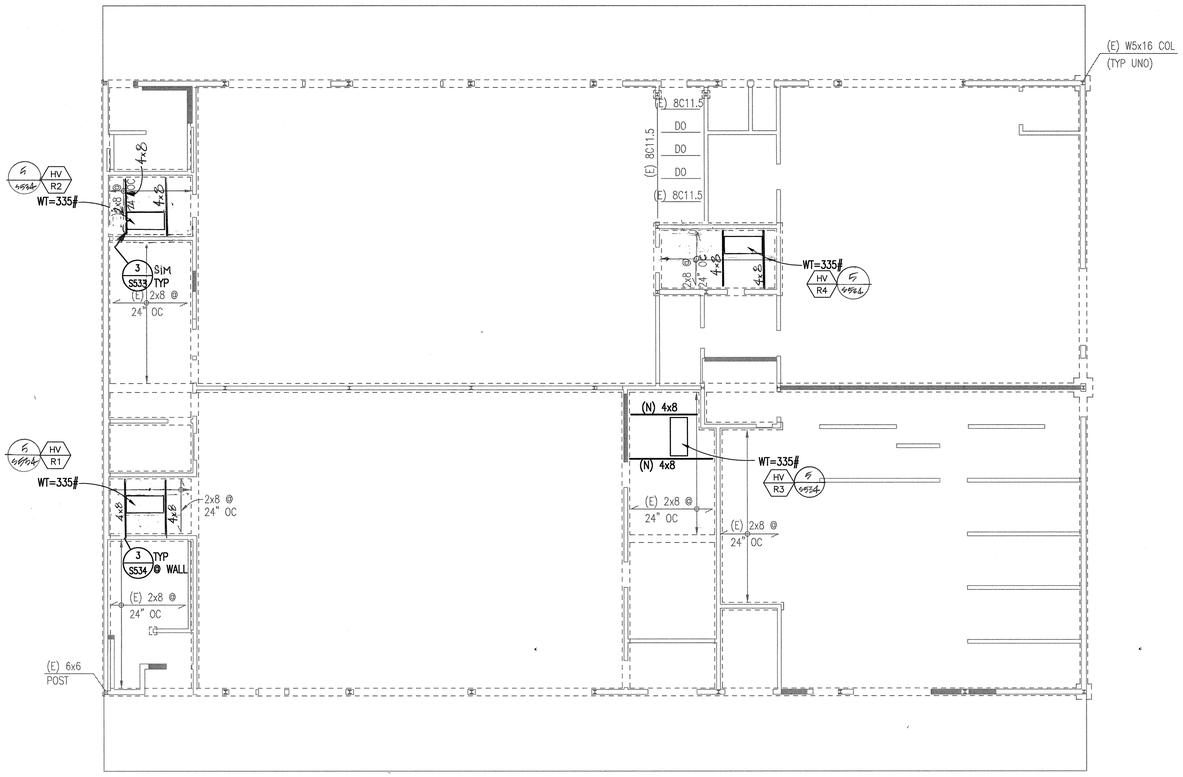

BUILDING R MEZZANINE PLAN

BUILDING

1
1/8"=1'-0"

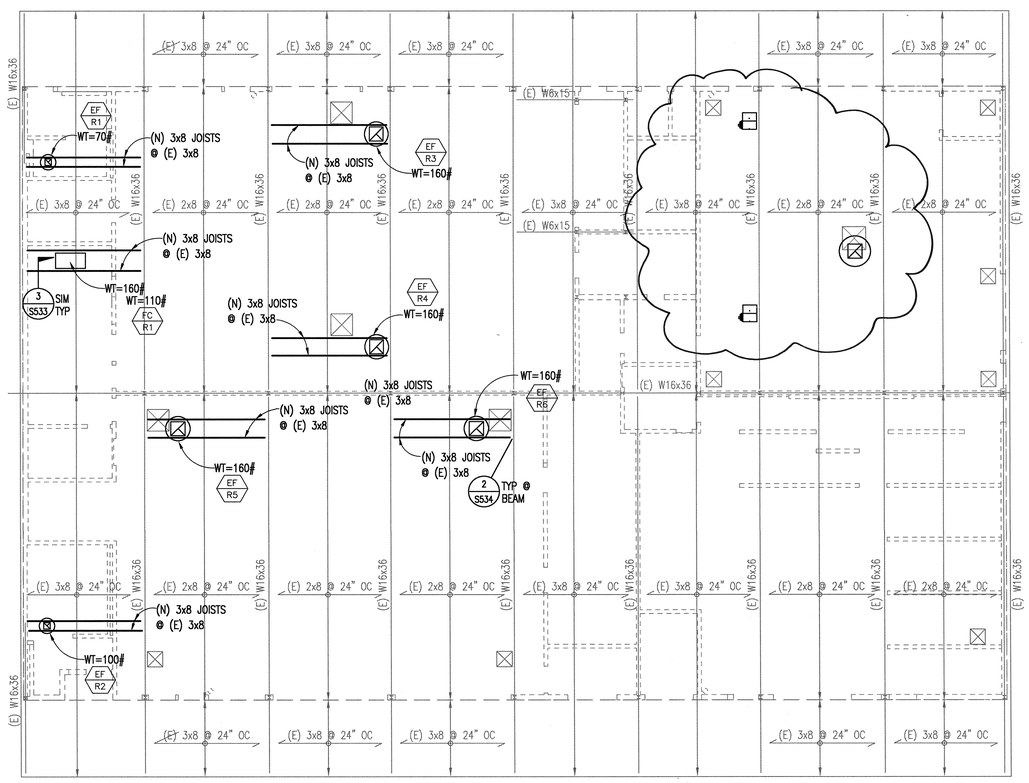

BUILDING R ROOF FRAMING PLAN

SHOP BUILDING

2
1/8"=1'-0"

PLAN NOTES

NOTES:

1. FOR GENERAL NOTES SEE SHEET S001 & S002.
2. FOR TYPICAL CONCRETE DETAILS, SEE SHEETS S511.
3. FOR TYPICAL STEEL DETAILS, SEE SHEET S521.
4. FOR TYPICAL WOOD DETAILS, SEE SHEETS S531 THRU S533.
5. CONTRACTOR TO VERIFY ALL DIMENSIONS AND ELEVATIONS PRIOR TO COMENSEMENT OF WORK.
6. REFER TO ARCHITECTURAL DRAWINGS FOR CURBS, RAMPS, DRAINS, EXTERIOR SLABS, PITS, SWALES, TRENCHES, OPENINGS, ETC..
7. FOR TYPICAL WALL FRAMING, SEE DETAILS ON SHEET S531.
8. ALL FRAMING IS NEW UNLESS NOTED AS EXISTING (E).
9. SEE DETAIL 8/S532 FOR SUSPENDED MECH UNITS. UNO.
10. FOR MECH ANCHORAGE SEE DETAIL 1/S531.
11. (E) EXHAUST FANS WILL BE REPLACED W/ IDENTICAL UNITS OR SMALLER.

KEY PLAN

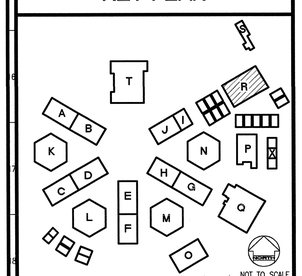

NOT TO SCALE

REVISED MAY 19 2004

IDENTIFICATION STAMP
DIV. OF THE STATE ARCHITECT
OFFICE OF REGULATION SERVICES
FILE NO. 19-H51
APPL. NO. 03-106434
AC.____ FLS.____ SS.____
DATE____

Dougherty + Dougherty
Architecture · Planning · Interior Design
3194-D Airport Loop Drive
Costa Mesa, CA 92626
(714) 427- 0277

Copyright © 2002 Dougherty + Dougherty

kpff Consulting Engineers
8400 Ton Harman Avenue, Suite 100
Huntington Beach, CA 92648
(949) 252-0222 Fax (949) 252-8082

Architect Seal

Consultant Seal

LA MIRADA HIGH SCHOOL MODERNIZATION - PHASE 1A

NORWALK - LA MIRADA UNIFIED SCHOOL DISTRICT
1352 ADELFA AVENUE LA MIRADA, CA 90638

CLASSROOM BLDG
R FOUNDATION &
ROOF FRAMING PLANS

Date: 1-30-03
Job: 12-0196
Scale: AS NOTED
Drawn:
Revisions:

S107

NOTES:

JOB NAME	FILE PATH & NAME	PLOTTED DATE & TIME	UPDATED BY	PLOT SCALE	PROG.MG.	DRAFTER
LA MIRADA HIGH	I:\PROJECTS\2002\12-0196\S107.DWG	DEC. 22, 2003 2:40:40 PM	---	1=1	B.T.	F.C.

JOB # 12-0196

XREFS: XR200095, X-R-Rf, 120196TB, XXKEY,

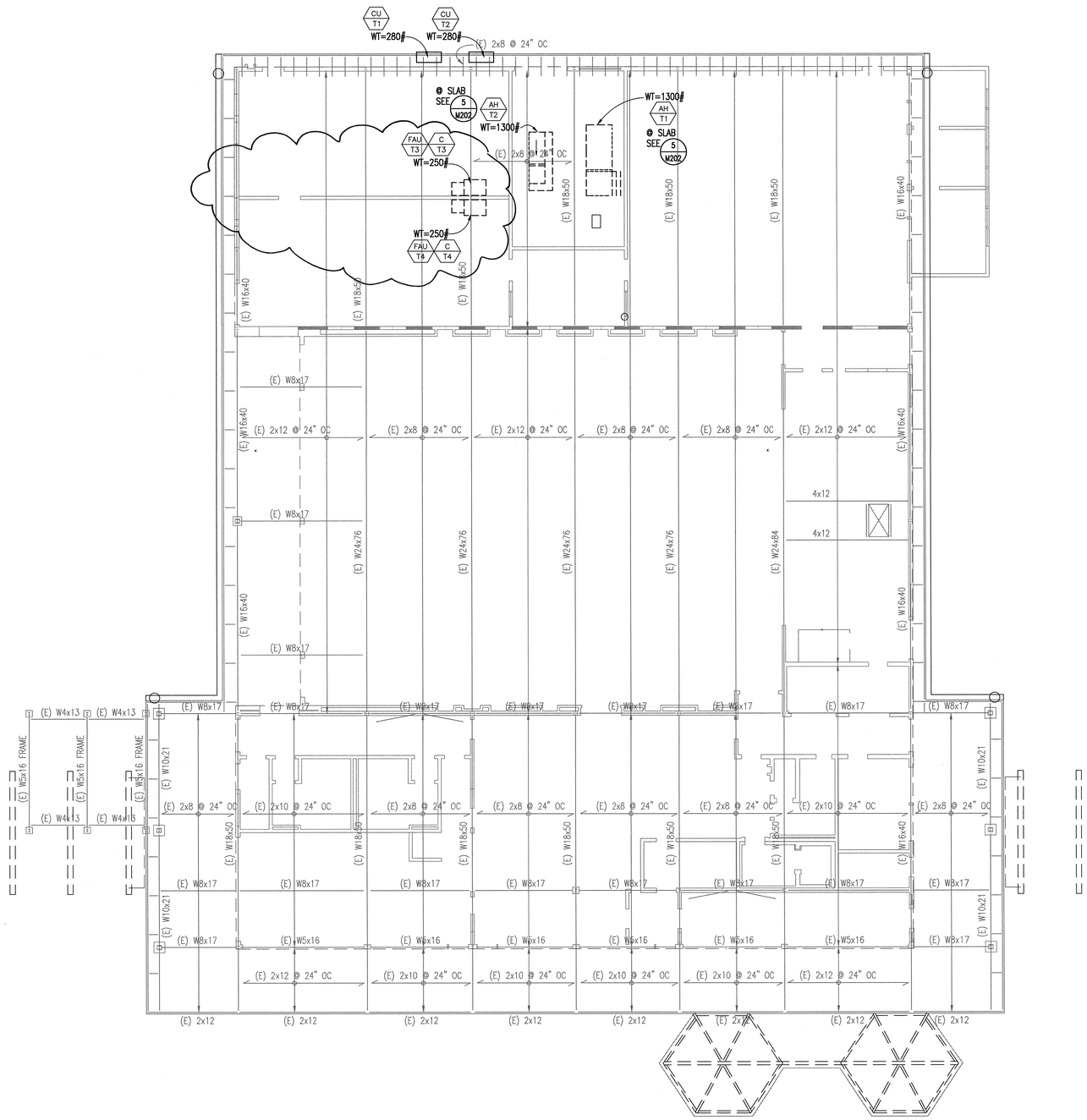

PLAN NOTES

NOTES:

1. FOR GENERAL NOTES SEE SHEET S001 & S002.
2. FOR TYPICAL CONCRETE DETAILS, SEE SHEETS S511 & S512.
3. FOR TYPICAL STEEL DETAILS, SEE SHEET S521.
4. FOR TYPICAL WOOD DETAILS, SEE SHEETS S531 THRU S534.
5. CONTRACTOR TO VERIFY ALL DIMENSIONS AND ELEVATIONS PRIOR TO COMENSEMENT OF WORK.
6. REFER TO ARCHITECTURAL DRAWINGS FOR CURBS, RAMPS, DRAINS, EXTERIOR SLABS, PITS, SWALES, TRENCHES, OPENINGS, ETC..
7. FOR TYPICAL WALL FRAMING, SEE DETAILS ON SHEET S531.
8. ALL FRAMING IS NEW UNLESS NOTED AS EXISTING (E).
9. SEE DETAIL 8/S532 FOR SUSPENDED MECH UNITS.
10. FOR MECH ANCHORAGE SEE DETAIL 1/S531.
11. SEE 1/S534 FOR NON-BEARING WALL FRAMING ELEVATION.

KEY PLAN

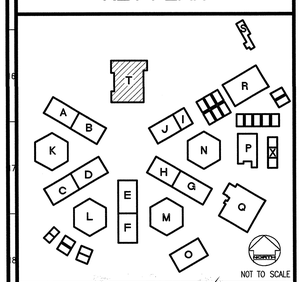

REVISED MAY 12 2004

IDENTIFICATION STAMP
DIV. OF THE STATE ARCHITECT
OFFICE OF REGULATION SERVICES
FILE NO. 19-H51
APPL. NO. 03-106434
AC.____ FLS.____ SS.____
DATE____

Dougherty + Dougherty
Architecture · Planning · Interior Design
2194-D Airport Drive
Santa Ana, CA 92705
(714) 427-0277

Copyright © 2002 Dougherty + Dougherty

kpff Consulting Engineers
8400 Ton Tarman Avenue, Suite 100
Irvine, California 92618
(949) 252-0222 Fax (949) 252-9282

Architect Seal

Consultant Seal

LA MIRADA HIGH SCHOOL
MODERNIZATION - PHASE 1A
NORWALK - LA MIRADA UNIFIED SCHOOL DISTRICT
1352 ADELFA AVENUE LA MIRADA, CA 90638

CLASSROOM
BUILDING T
ROOF FRAMING PLAN

Date:	1-30-03
Job:	12-0196
Scale:	AS NOTED
Drawn:	
Revisions:	

S108

NOTES:						
JOB #	JOB NAME	FILE PATH & NAME	PLOTTED DATE & TIME	UPDATED BY	PLOT SCALE	PROG.MG.	DRAFTER
12-0196	LA MIRADA HIGH	L:\PROJECTS\2002\12-0196\S108.DWG	DEC. 22, 2003 3:54:40 PM	---	1=1	B.T.	F.C.

XREFS: 12019616 X12000196 XXREF1

BUILDING T ROOF FRAMING PLAN
MULTI-PURPOSE BUILDING

1
1/8"=1'-0"

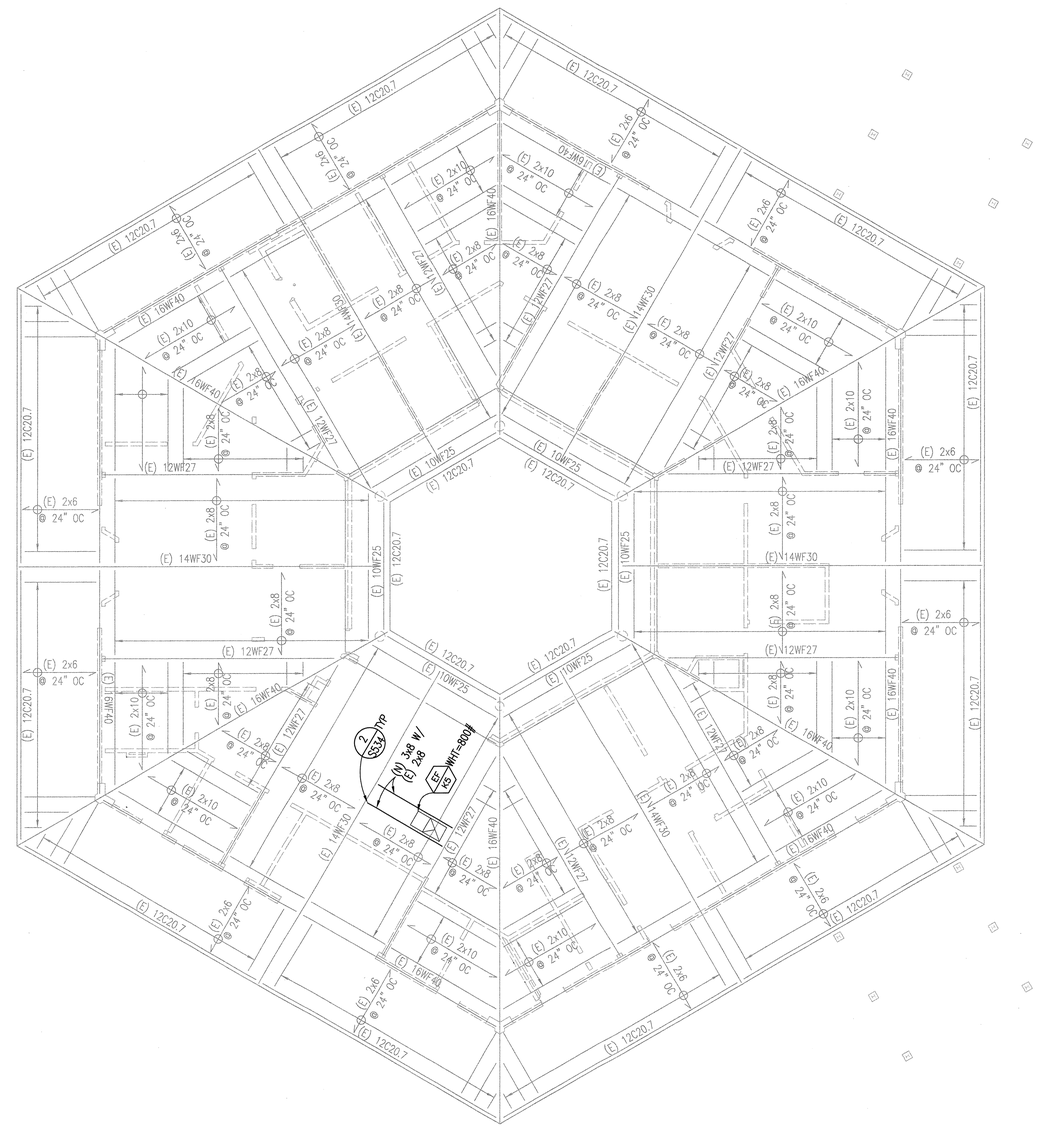

PLAN NOTES

NOTES:

1. FOR GENERAL NOTES SEE SHEET S001.
2. FOR TYPICAL CONCRETE DETAILS, SEE SHEETS S511 & S512.
3. FOR TYPICAL STEEL DETAILS, SEE SHEET S521.
4. FOR TYPICAL WOOD DETAILS, SEE SHEETS S531 THRU S534.
5. CONTRACTOR TO VERIFY ALL DIMENSIONS AND ELEVATIONS PRIOR TO COMENSEMENT OF WORK.
6. REFER TO ARCHITECTURAL DRAWINGS FOR CURBS, RAMPS, DRAINS, EXTERIOR SLABS, PITS, SWALES, TRENCHES, OPENINGS, ETC..
7. ALL FRAMING IS NEW UNLESS NOTED AS EXISTING (E).
8. FOR ROOF MOUNTED AND SUSPENDED MECH UNITS SEE DETAILS 2/S531 AND 8/S532.

KEY PLAN

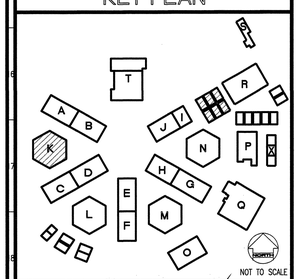

REVISED

IDENTIFICATION STAMP
DIV. OF THE STATE ARCHITECT
OFFICE OF REGULATION SERVICES
FILE NO. 19-H51
APPL. NO. 03-106434
AC ____ FLS ____ SS ____
DATE ____

MAY 1 2 2004

BUILDING K ROOF FRAMING PLAN | 1
ADMIN. BUILDING | 1/8"=1'-0"

Dougherty + Dougherty
Architecture • Planning • Interior Design
3194-D Airport Loop Drive
Costa Mesa, CA 92626
(714) 427-0217

Copyright © 2002 Dougherty + Dougherty

kpff Consulting Engineers
18400 Von Karman Avenue, Suite 100
Irvine, California 92612-593
(949) 252-1022 Fax (949) 252-9082

Architect Seal

Consultant Seal

LA MIRADA HIGH SCHOOL
MODERNIZATION - PHASE 1A
NORWALK - LA MIRADA UNIFIED SCHOOL DISTRICT
1352 ADELFA AVENUE LA MIRADA, CA 90638

ADMINISTRATION BUILDING K
ROOF FRAMING PLAN

Date:	1-30-03
Job:	12-0196
Scale:	AS NOTED
Drawn:	
Revisions:	
1	12-01-03

S109

JOB #	JOB NAME	FILE PATH & NAME	PLOTTED DATE & TIME	UPDATED BY	PLOT SCALE	PROG.MG.	DRAFTER
12-0196	LA MIRADA HIGH	I:\PROJECTS\2002\12-0196\S109.DWG	APR. 13, 2004 5:03:44 PM	---	1=1	B.T.	F.C.

NOTES:
XREFS: 2K-FRPLN, 12019GTB, XXKEY

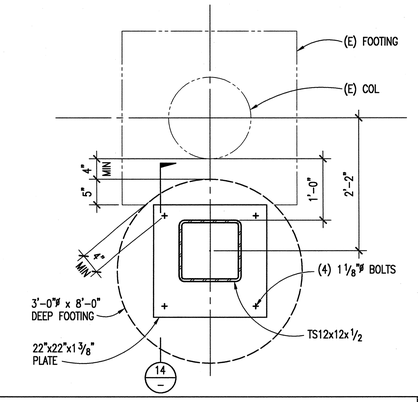

TS COL BASE PL AND FOOTING 1"=1'-0" **13**

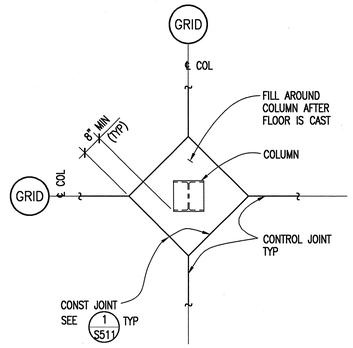

ISOLATION AT COLUMN AND SLAB ON GRADE 1/2"=1'-0" **9**

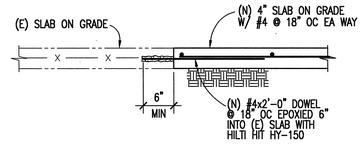

(N) TO (E) SLAB ON GRADE DETAIL 1"=1'-0" **6**

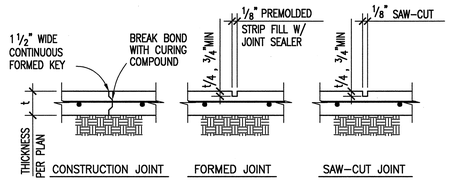

NOTES:
1. CONTROL JOINTS TO BE LOCATED AT COLUMN CENTER LINES AND AT 20'-0" OC MAX AND EVERY 400 SQUARE FEET.
2. IF SAW-CUT CONTROL JOINT TO BE USED, SAW-CUT WITHIN 24 HOURS OF POUR.
3. CONSTRUCTION JOINT TO BE LOCATED AS PER NOTES #1 AND #2 UNLESS SPECIFICALLY INDICATED ON PLANS.

SLAB ON GRADE CONTROL JOINTS 1"=1'-0" **1**

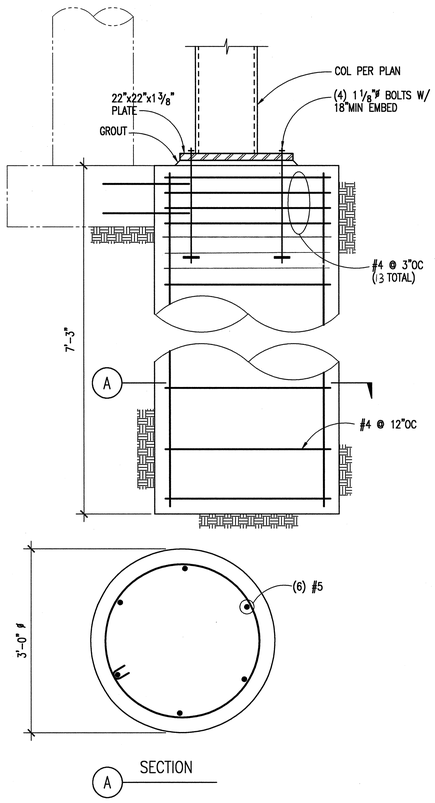

TS COL BASE PL AND FOOTING 1"=1'-0" **14**

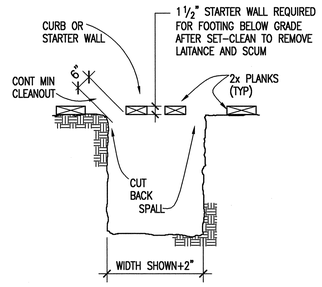

NOTE:
FORMWORK NOT PERMITTED BELOW GRADE (UNLESS SIDES OF FTG ARE FULLY FORMED). STAKES NOT PERMITTED IN FOOTING SECTION

MANDATORY MINIMUM FORMWORK 1/2"=1'-0" **10**

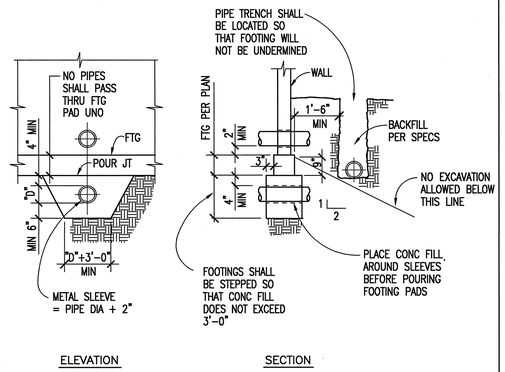

PIPE TRENCH/FOOTING DETAIL NTS **7**

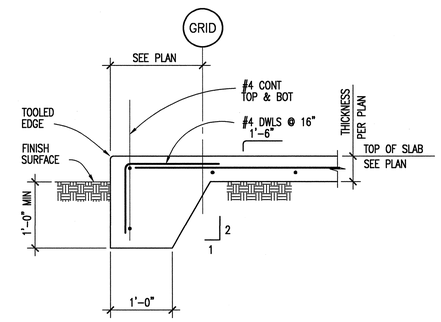

EDGE OF SLAB ON GRADE 1"=1'-0" **3**

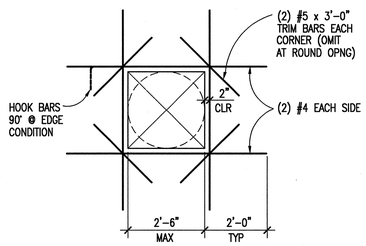

NOTES:
1. SEE WALL ELEVATIONS OR PLANS FOR REINFORCEMENT AT LARGER OPENINGS.
2. CLUSTERS OF SMALL HOLES WHOSE OVERALL MEASUREMENT EXCEED 1'-0" SHOULD BE REINFORCED AS ONE OPENING.
3. NO OPENING IN SLAB TO BE LOCATED CLOSER THAN 2'-0" FROM COLUMN FACE UNLESS APPROVED BY THE STRUCTURAL ENGINEER.

CONCRETE WALL/SLAB OPENING DETAIL 1/2"=1'-0" **11**

- 1"=1'-0" **8**

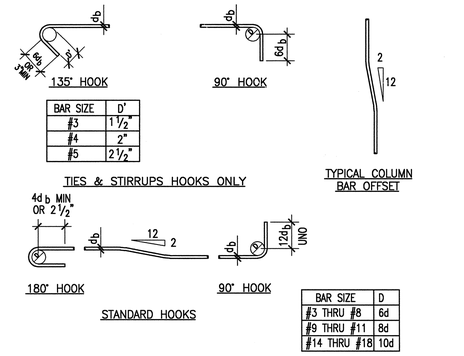

BAR SIZE	D'
#3	1 1/2"
#4	2"
#5	2 1/2"

BAR SIZE	D
#3 THRU #8	6d
#9 THRU #11	8d
#14 THRU #18	10d

REINFORCING BAR BENDING DETAIL 1/2"=1'-0" **4**

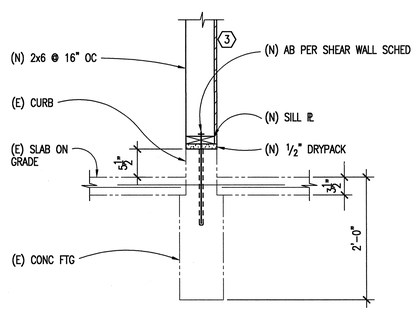

(E) FOOTING DETAIL 1"=1'-0" **15**

		REINFORCING BAR SPLICE LENGTH						
TENSION SPLICE f'c (psi)	BAR SIZE GR 60	3	4	5	6	7	8	9
	BAR DIAMETER, b_d(in)	0.375	0.500	0.625	0.750	0.875	1.000	1.128
CLASS "B" 3000	TOP BAR	2'-4"	3'-1"	3'-10"	4'-8"	6'-9"	7'-9"	8'-8"
	BOTTOM BAR	1'-9"	2'-4"	3'-0"	3'-7"	5'-2"	5'-11"	6'-8"

NOTES:
1. ALL REINFORCING MUST MEET ONE OF THE FOLLOWING CONDITIONS.
   A. CASE I: THE CLEAR SPACING OF THE BARS BEING DEVELOPED OR SPLICED IS NOT LESS THAN ONE BAR DIAMETER (d_b), CLEAR COVER NOT LESS THAN ONE BAR DIAMETER (d_b), AND STIRRUPS OR TIES THROUGHOUT THE SPLICE LENGTH.
   B. OR CASE II: THE CLEAR SPACING OF THE BARS BEING SPLICED IS NOT LESS THAN TWO BAR DIAMETERS ($2d_b$) AND THE CLEAR COVER IS NOT LESS THAN ONE BAR DIAMETER (d_b).
   C. FOR ALL OTHER CASES MULTIPLY THE SPLICES SHOWN BY 1.5.
2. THE ABOVE VALUES ARE FOR NORMAL WEIGHT CONCRETE.
3. THE ABOVE VALUES ARE FOR UNCOATED REINFORCEMENT.
4. TOP BARS ARE HORIZONTAL REINFORCEMENT WITH MORE THAN 12" OF NEW CONCRETE PLACED BELOW THE BAR.
5. BOTTOM BARS ARE ALL VERTICAL BARS, AND HORIZONTAL REINFORCEMENT WITH LESS THAN 12" OF NEW CONCRETE PLACED BELOW THE BAR.

NORMAL WEIGHT CONCRETE LAP SPLICE SCHEDULE 1"=1'-0" **12**

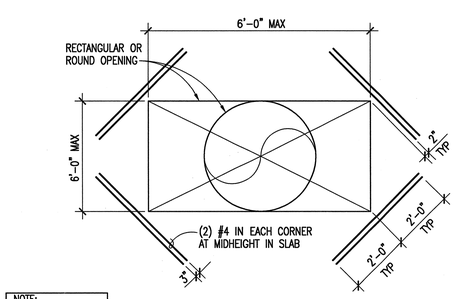

NOTE:
ELIMINATE BARS AND KEYED JOINT IF OPENING IS LESS THAN 2'-0"

OPENING IN SLAB ON GRADE 1/2"=1'-0" **5**

NOTES:

JOB #	JOB NAME	PLOTTED DATE & TIME	FILE PATH & NAME
12-0196	LA MIRADA HIGH	JAN. 29, 2003 10:51:27 AM	I:\PROJECTS\2002\12-0196\S511.DWG

UPDATED BY	PLOT SCALE	PROG.MG.	DRAFTER
----	1=1	B.T.	F.C.

XREFS: a20196tb; xAET;

Dougherty ■ Dougherty
Architecture · Planning · Interior Design
3194-D Airport Loop Drive
Costa Mesa, CA 92626
(714) 427-0277

Copyright © 2002 Dougherty + Dougherty

kpff Consulting Engineers
8400 Van Karman Avenue, Suite 100
Irvine, California 92612-1259
(949) 250-0202 Fax (949) 250-0082

Architect Seal

Consultant Seal

LA MIRADA HIGH SCHOOL
MODERNIZATION - PHASE 1A
NORWALK - LA MIRADA UNIFIED SCHOOL DISTRICT
1352 ADELFA AVENUE LA MIRADA, CA 90638

TYPICAL CONCRETE DETAILS

Date:	1-30-03
Job:	12-0196
Scale:	AS NOTED
Drawn:	
Revisions:	

IDENTIFICATION STAMP
DIV. OF THE STATE ARCHITECT
OFFICE OF REGULATION SERVICES
FILE NO. 19-H51
APPL. NO. 03-106434
AC.____ FLS.____ SS.____
DATE JAN 30 2003

S511

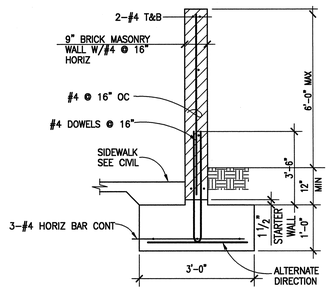

BRICK MASONRY WALL 1"=1'-0" **1**

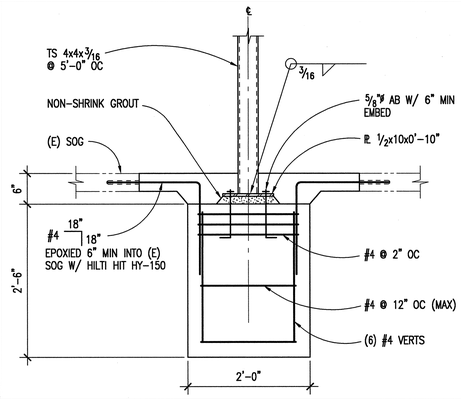

FOOTING AT FREE STANDING WALL (BLDG N) 1"=1'-0" **2**

NOTES:

JOB #	JOB NAME	FILE PATH & NAME	PLOTTED DATE & TIME	UPDATED BY	PLOT SCALE	PROG.MG.	DRAFTER
12-0196	LA MIRADA HIGH	I:\PROJECTS\2002\12-0196\S512.DWG	JAN. 30, 2003 1:00:30 AM	---	1=1	B.T.	F.C.

XREFS: 12019616, xxKEY,

IDENTIFICATION STAMP
DIV. OF THE STATE ARCHITECT
OFFICE OF REGULATION SERVICES
FILE NO. 19-H51
APPL. NO. 03-106434
AC. ____ FLS. ____ SS. ____
DATE JAN 30 2003

Dougherty ■■ Dougherty
Architecture · Planning · Interior Design
3194-D Airport Loop Drive
Costa Mesa, CA 92626
(714) 427-0277

Copyright © 2002 Dougherty + Dougherty

kpff Consulting Engineers
8400 Von Karman Avenue, Suite 100
Irvine, California 92612-1238
(949) 252-1022 Fax (949) 252-0282

REGISTERED ARCHITECT No. C-8624 STATE OF CALIFORNIA
Architect Seal

REGISTERED PROFESSIONAL ENGINEER No. Structural Exp. 6/30/03 STRUCTURAL
Consultant Seal

LA MIRADA HIGH SCHOOL
MODERNIZATION - PHASE 1A
NORWALK - LA MIRADA UNIFIED SCHOOL DISTRICT
1352 ADELFA AVENUE LA MIRADA, CA 90638

TYPICAL CONCRETE DETAILS

Date:	1-30-03
Job:	12-0196
Scale:	AS NOTED
Drawn:	
Revisions:	

S512

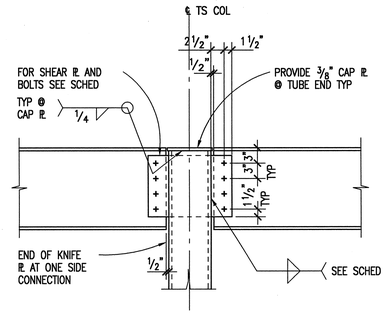

GIRDER TO TS COLUMN (C)

STANDARD BOLTED CONNECTION SCHEDULE					
BEAM SIZE	NO.& SIZE OF BOLTS REQUIRED	PLATE THICKNESS	WELD SIZE	CONN. CAPACITY A325-N	CONN. CAPACITY A325-SC
W8 C8	(2) 7/8"ø	1/4"	1/4"	8.2K	6.6K
W10 C10	(2) 7/8"ø	1/4"	1/4"	11.1K	9.0K
W12 C12	(3) 7/8"ø	1/4"	1/4"	22.3K	18.1K
W14	(3) 7/8"ø	1/4"	1/4"	22.3K	18.1K
W16	(4) 7/8"ø	5/16"	1/4"	35.7K	28.9K

CONNECTION NOTES:

1. ALL BOLTS TO BE ASTM A325-SC FULLY PRETENSIONED AND INSPECTED PER AISC.
2. CONNECTION PLATES TO HAVE AISC STANDARD ROUND HOLES UNLESS NOTED OTHERWISE.
3. ALL CONNECTION PLATE MATERIAL TO BE A36.
4. [X] SHOWN ON PLANS INDICATES NUMBER OF BOLTS REQUIRED. IF NOT SHOWN THEN USE THE NUMBER OF BOLTS SHOWN IN THE TABLE ABOVE.

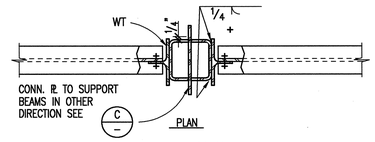

PLAN

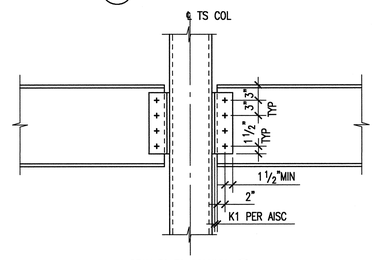

BEAM TO TS COLUMN (B)

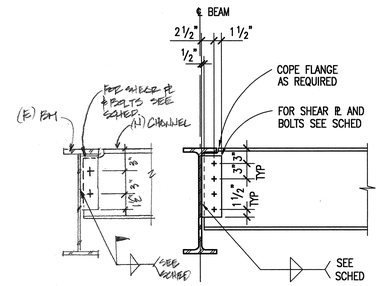

CHANNEL TO (E) BM (D)

BEAM TO BEAM (A)

TYPICAL BOLTED BEAM CONNECTION DETAIL 1"=1'-0" 1

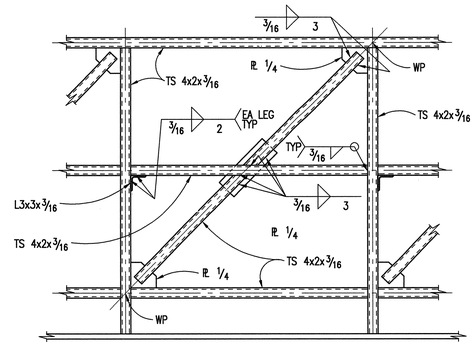

SCREEN WALL ELEVATION 1"=1'-0" 4

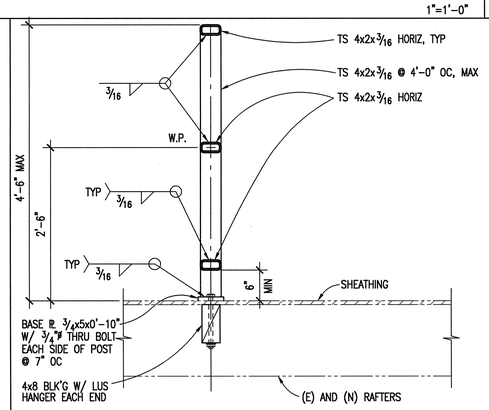

MECH SCREEN SECTION 1"=1'-0" 2

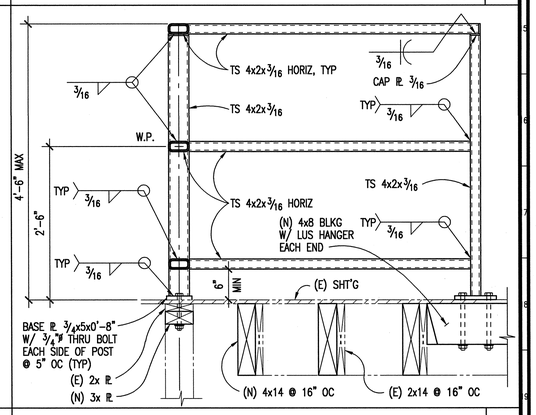

MECH SCREEN SECTION 1"=1'-0" 3

IDENTIFICATION STAMP
DIV. OF THE STATE ARCHITECT
OFFICE OF REGULATION SERVICES
FILE NO. 19-H51
APPL. NO. 03-106434
AC.____ FLS.____ SS.____
DATE JAN 9 0 2003

Dougherty ■ Dougherty
Architecture · Planning · Interior Design
3194-D Airport Loop Drive
Costa Mesa, CA 92626
(714) 427-0877

Copyright © 2002 Dougherty + Dougherty

kpff Consulting Engineers
8400 Von Karman Avenue, Suite 100
Irvine, California 92612-1202
(949) 252-0202 Fax (949) 252-0282

Architect Seal

Consultant Seal

LA MIRADA HIGH SCHOOL
MODERNIZATION - PHASE 1A
NORWALK - LA MIRADA UNIFIED SCHOOL DISTRICT
1352 ADELFA AVENUE LA MIRADA, CA 90638

TYPICAL STEEL DETAILS

Date: 1-30-03
Job: 12-0196
Scale: AS NOTED
Drawn:
Revisions:

S521

JOB #	JOB NAME	FILE PATH & NAME	PLOTTED DATE & TIME	UPDATED BY	PLOT SCALE	PROG.MG.	DRAFTER
12-0196	LA MIRADA HIGH	I:\PROJECTS\2002\12-0196\S521.DWG	JAN. 29, 2003 11:37:30 PM	---	1=1	B.T.	F.C.

NOTES:
XREFS: 12019678; xxKEY:

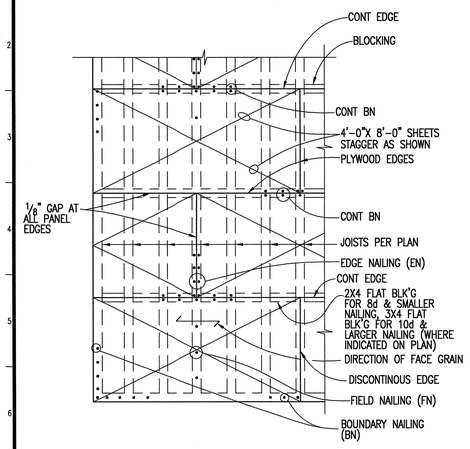

PLAN

NOTES:
1. ALL PLYWOOD SHALL BE DOUGLAS FIR WITH EXTERIOR GLUE
2. PLYWOOD PIECES SHALL CONTAIN NOT LESS THAN 8 SQUARE FEET NOR BE LESS THAN 2 FT WIDE
3. ALL PLYWOOD EDGES SHALL BE SUPPORTED W/ FRAMING OR BLOCKING.

TYPICAL SHEATHING NAILING 1"=1'-0" **9**

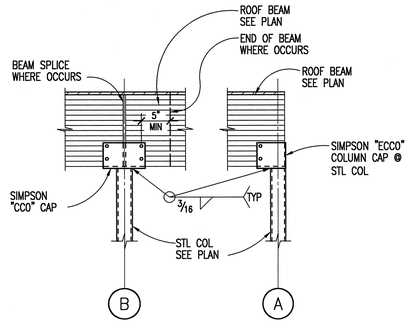

TYPICAL STEEL COLUMN TO BEAM 1"=1'-0" **5**

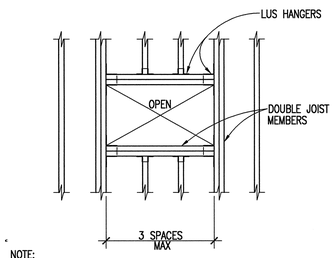

NOTE:
USE BN ON ALL MEMBERS FOR 2'-0" BEYOND OPENING

TYPICAL FRAMING AT ROOF OPENING 1"=1'-0" **6**

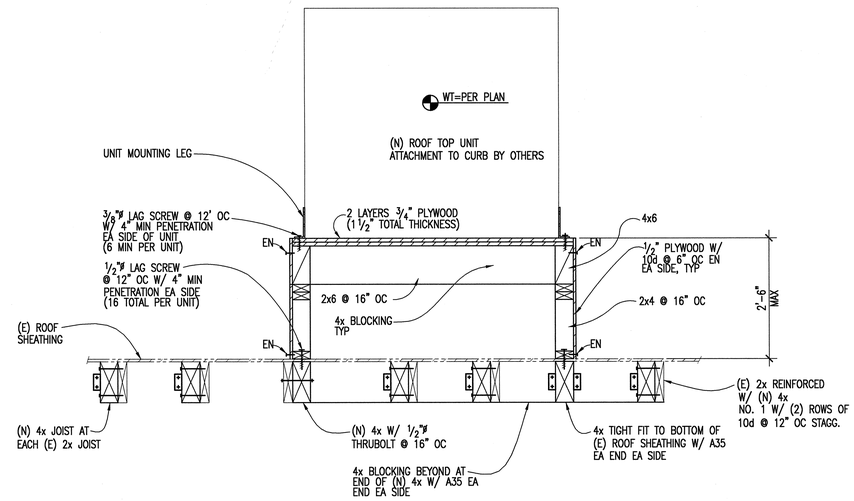

EQUIPMENT SUPPORT SECTION 1"=1'-0" **1**

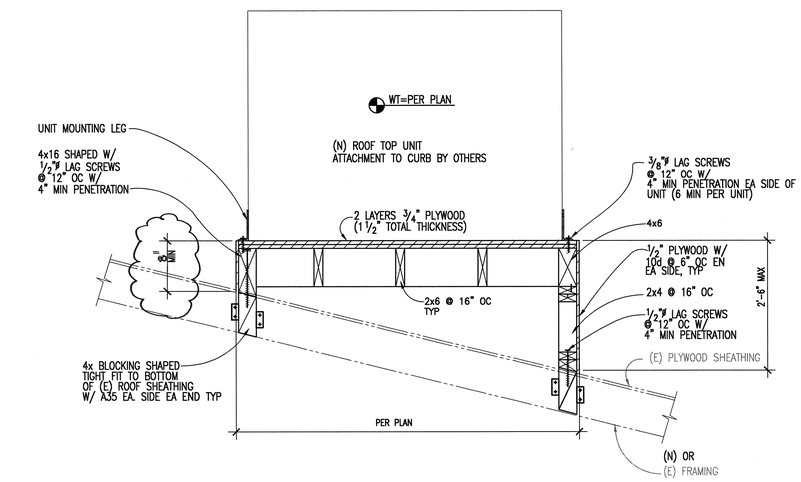

EQUIPMENT SUPPORT SECTION 1"=1'-0" **2**

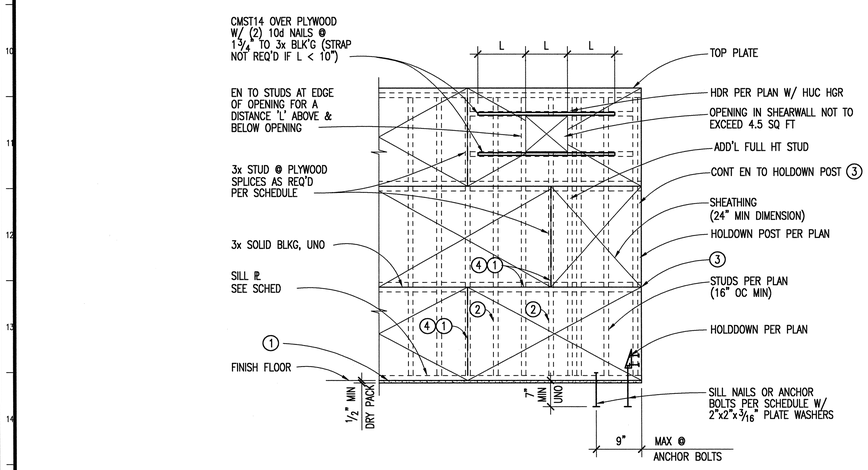

MARK	SHEATHING		NAILING	ANCHOR BOLTS	SILL NAILS (SN)	SIMPSON 'A35'	NOTES 1, 2, 3, 7 UNO
2	1/2" STRUCT I BLOCKED	ONE SIDE	10d @ 4" EN AND 12" FN	3/4" ø @ 32" OC	SDS 1/4" x 6" @ 6" OC	@ 10" OC	5, 6,
3	1/2" STRUCT I BLOCKED	ONE SIDE	10d @ 3" EN AND 12" FN	3/4" ø @ 24" OC	SDS 1/4" x 6" @ 4" OC	@ 8" OC	5, 6,

NOTES:
1. SEE PLAN FOR LOCATION OF SHEATHED WALLS.
2. PLYWOOD SHALL BE STRUCT=I (PII 24/0) WITH FACE GRAIN HORIZONTAL.
3. MINIMUM EDGE DISTANCE FOR NAILS SHALL BE 3/8".
4. OFFSET PLYWOOD ON BOTH SIDES OF WALL AND USE 3x STUDS & BLOCKING.
5. USE 3x STUDS & BLOCKING @ ADJACENT PLYWOOD EDGES, STAGGER NAILS.
6. USE 3x SILL PLATE AT ALL SHEARWALLS.
7. USE COMMON NAILS ONLY, BOX NAILS ARE NOT PERMITTED.
8. PROVIDE STRAP AT DOORS AND WINDOWS IN SHEARWALL PER DETAILS.

1. EDGE NAILING (EN) AT PANEL EDGES.
2. FIELD NAILING (FN) @ 12" AT INTERMEDIATE FRAMING.
3. EN AT POST WHERE HOLDOWN ANCHOR OCCURS.
4. PROVIDE 1/8" GAP BETWEEN ENDS & SIDES OF PLYWOOD SHEETS.
5. IF ANCHORING TO EXISTING CONCRETE, USE ANCHOR BOLT SIZE AND SPACING AS INDICATED ON SCHEDULE, EPOXIED 7" MIN INTO EXISTING CONCRETE W/ HILTI HIT HY-150.

SHEAR WALL SCHEDULE **7**

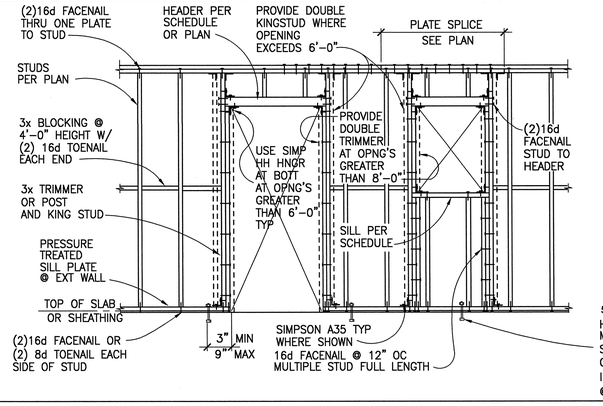

HEADER SCHEDULE (SEE NOTE 1)			
OPENING WIDTH	HEADER 4x FRMG	HEADER 6x FRMG	SILL WHERE OCCURS
UP TO 6'-0"	4x6	6X6	2x
6'-0" TO 8'-0"	4x8	6X8	(2) 2x
8'-0" TO 10'-0"	4x10	6X10	(3) 2x

NOTE:
1. HEADERS, KINGSTUDS AND OTHER REFERENCES ON PLAN GOVERN OVER TYPICAL DETAIL.
2. SEE SHEARWALL PLYWOOD NAILING DETAIL 7/- FOR ADDITIONAL INFORMATION.
3. AT SHEARWALLS USE SILL CONNECTION PER 7/- .
4. 1/2" THICK DRYPACK REQUIRED UNDER SILL PLATE.

EXTERIOR AND INTERIOR BEARING/SHEARWALL FRAMING 1"=1'-0" **3**

NOTES:	JOB NAME	FILE PATH & NAME	PLOTTED DATE & TIME	UPDATED BY	PLOT SCALE	PROG.MG.	DRAFTER
JOB # 12-0196	LA MIRADA HIGH	I:\PROJECTS\2002\12-0196\S531.DWG	DEC. 22, 2003 4:01:42 PM	---	1=1	B.T.	F.C.
XREFS:	12019GTB; xxKEY;						

Dougherty + Dougherty
Architecture · Planning · Interior Design
3194-D Airport Loop Drive
Costa Mesa, Ca. 92626
(714) 427- 0277

Copyright © 2002 Dougherty + Dougherty

kpff Consulting Engineers
9000 Von Karman Avenue, Suite 100
Irvine, California 92612-259
(949) 252-0202 Fax (949) 252-0202

Architect Seal

Consultant Seal

LA MIRADA HIGH SCHOOL
MODERNIZATION - PHASE 1A
NORWALK - LA MIRADA UNIFIED SCHOOL DISTRICT
1352 ADELFA AVENUE LA MIRADA, CA 90638

TYPICAL WOOD DETAILS

Date:	1-30-03
Job:	12-0196
Scale:	AS NOTED
Drawn:	
Revisions:	

REVISED MAY 1 2 2004

IDENTIFICATION STAMP
DIV. OF THE STATE ARCHITECT
OFFICE OF REGULATION SERVICES
FILE NO. 19-H51
APPL. NO. 03-106434
AC____ FLS____ SS____
DATE____

S531

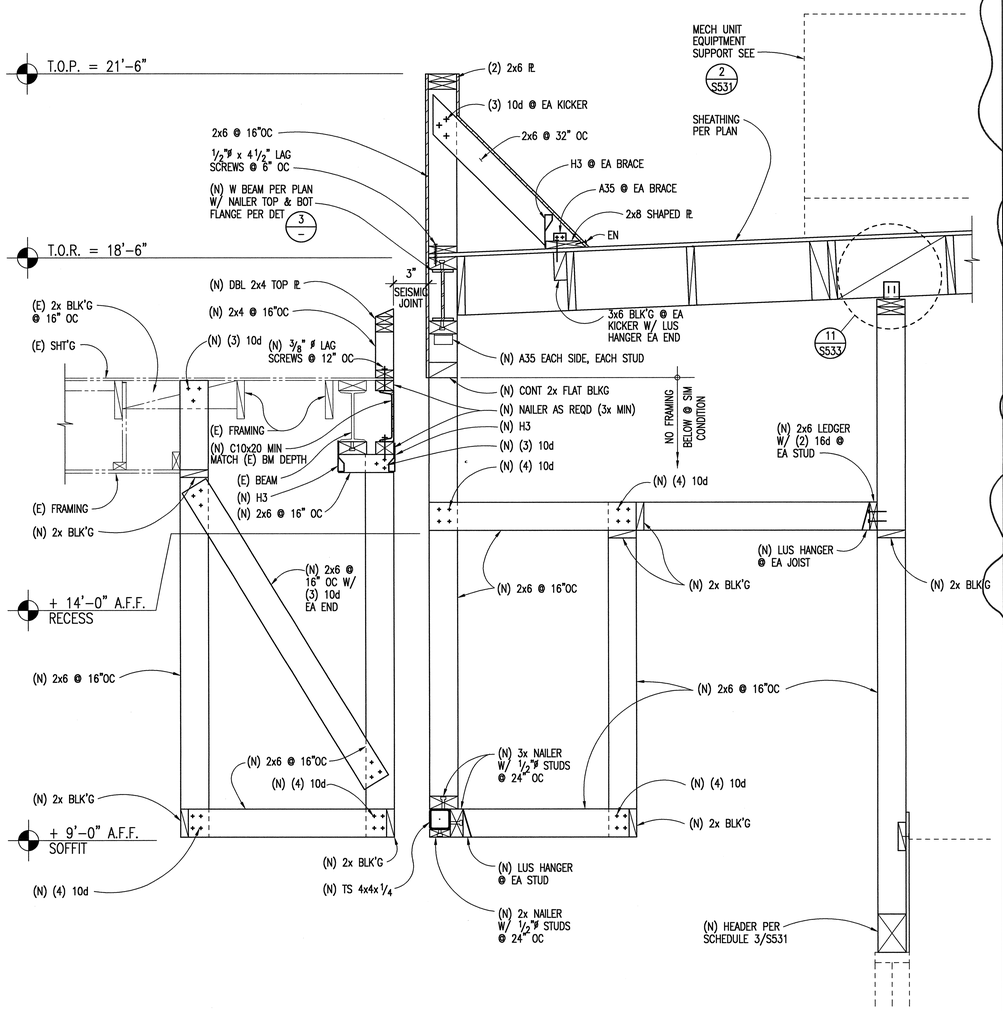

FRAMING SECTION AT BLDG N

1"=1'-0" 7

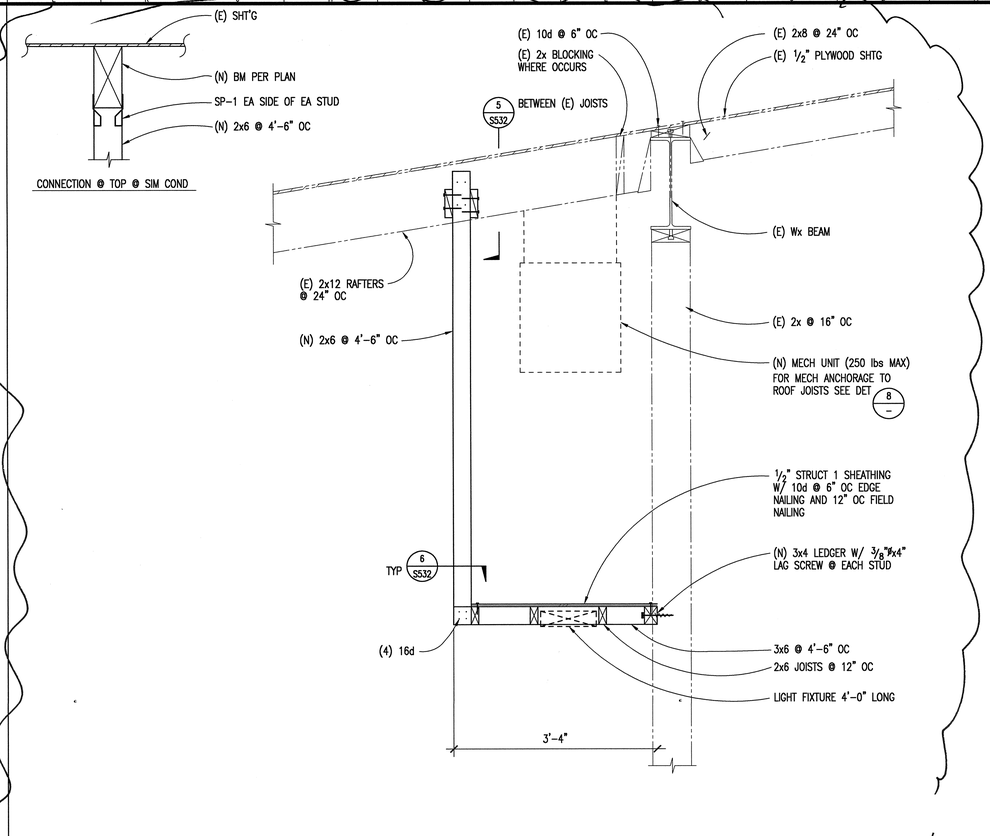

SECTION AT NEW SOFFIT

1"=1'-0" 1

BOLT DIA	MALLEABLE IRON WASHER	STEEL ℞ WASHER
1/2"	3/16" x 2 1/2"ø	3/16"x2"x2"
5/8"	1/4" x 2 1/2"ø	1/4"x2 1/2"x2 1/2"
3/4"	5/16" x 3"ø	5/16"x2 3/4"x2 3/4"
7/8"	5/16" x 3 1/2"ø	3/8"x3 1/2"x3 1/2"
1"	3/8" x 4"ø	7/16"x4"x4"

NOTES:
1. PROVIDE STD CUT WASHERS UNDER BOLT HEADS AND NUTS.
2. PROVIDE MALLEABLE IRON OR STEEL PLATE WASHER UNDER HEAD OR NUT FOR LEDGER BOLTS AND HOLDOWN BOLTS.

WASHERS-BEARING ON WOOD

1"=1'-0" 4

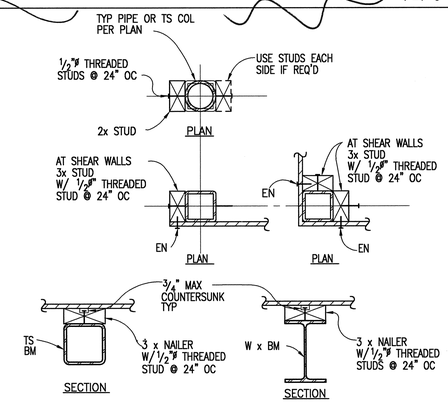

TYPICAL WOOD STUD TO STEEL CONNECTION

3

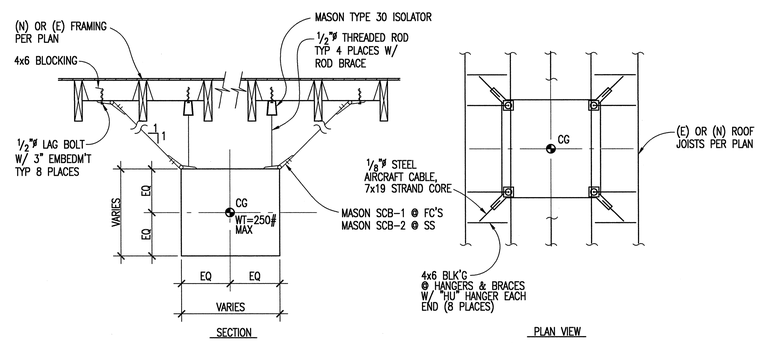

TYPICAL SUSPENDED MECHANICAL UNIT

1"=1'-0" 8

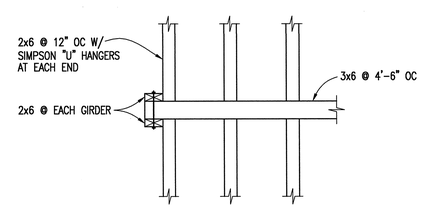

CLASSROOM SOFFIT PARTIAL PLAN

1"=1'-0" 6

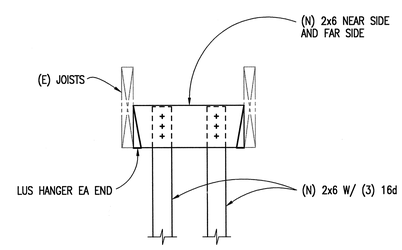

DETAIL BETWEEN (E) JOIST

1 1/2"=1'-0" 5

Dougherty ■ Dougherty
Architecture · Planning · Interior Design
3194-D Airport Loop Drive
Costa Mesa, CA 92626
(714) 427-0277

Copyright © 2002 Dougherty + Dougherty

kpff Consulting Engineers
8400 Von Karman Avenue, Suite 100
Irvine, California 92612-638
(949) 252-1022 Fax (949) 252-0092

Architect Seal

Consultant Seal

LA MIRADA HIGH SCHOOL
MODERNIZATION - PHASE 1A
NORWALK - LA MIRADA UNIFIED SCHOOL DISTRICT
13352 ADELFA AVENUE LA MIRADA, CA 90638

WOOD DETAILS

Date:	1-30-03
Job:	12-0196
Scale:	AS NOTED
Drawn:	
Revisions:	

REVISED MAY 12 2004

IDENTIFICATION STAMP
DIV. OF THE STATE ARCHITECT
OFFICE OF REGULATION SERVICES
FILE NO. 19--H51
APPL. NO. 03-106434
AC___ FLS___ SS___
DATE___

S532

NOTES:

JOB #	JOB NAME	FILE PATH & NAME	PLOTTED DATE & TIME	UPDATED BY	PLOT SCALE	PROG.MG.	DRAFTER
12-0196	LA MIRADA HIGH	L:\PROJECTS\2002\12-0196\S532.DWG	MAR. 29, 2004 3:13:50 PM	---	1=1	B.T.	F.C.

XREFS: 12019BTB, xWCLY,

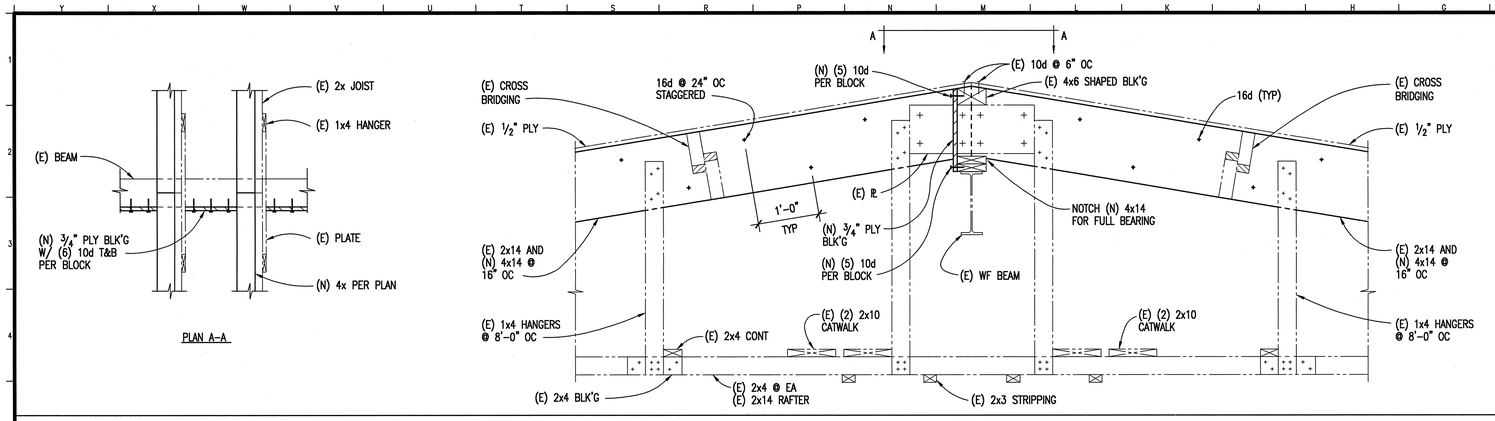

SECTION DETAIL AT RIDGE

1"=1'-0" **5**

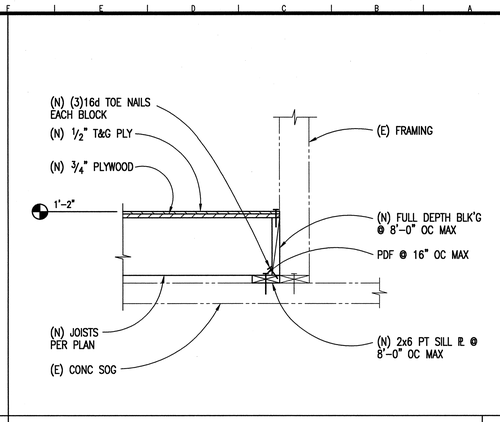

DETAIL AT RAISED PLATFORM

1"=1'-0" **1**

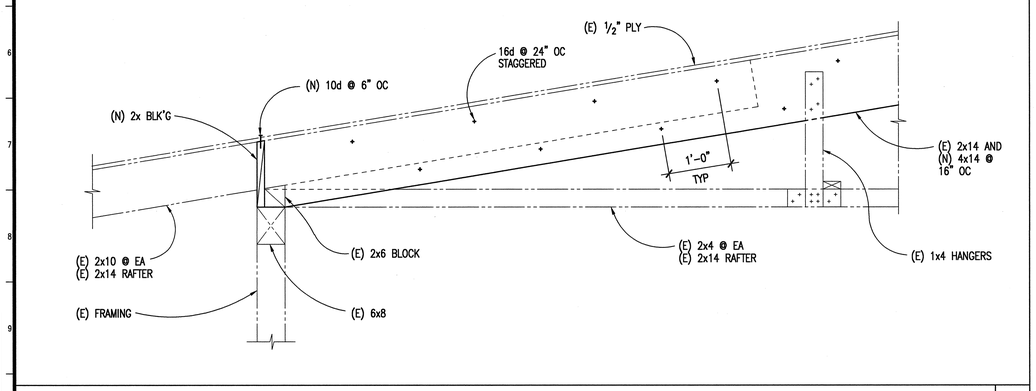

END CONNECTION DETAIL AT JOIST

1"=1'-0" **8**

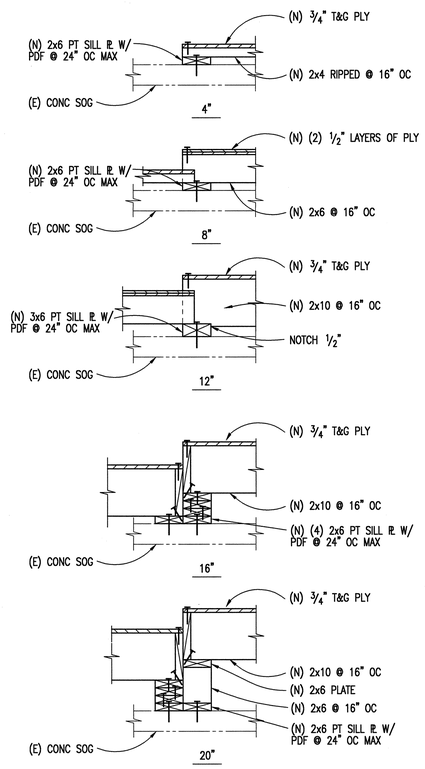

VARIOUS PLATFORM HEIGHTS

1"=1'-0" **6**

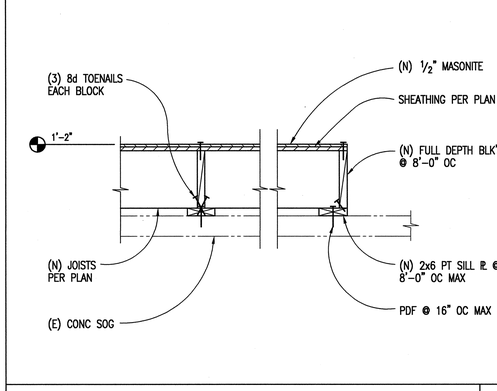

SECTION AT STAGE

1"=1'-0" **2**

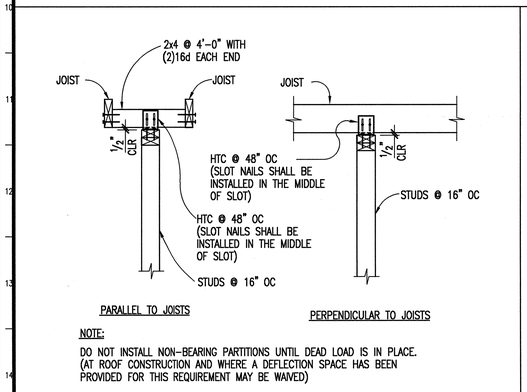

NON-BEARING PARTITION TOP PLATE ANCHORAGE AT SAWN LUMBER

1"=1'-0" **11**

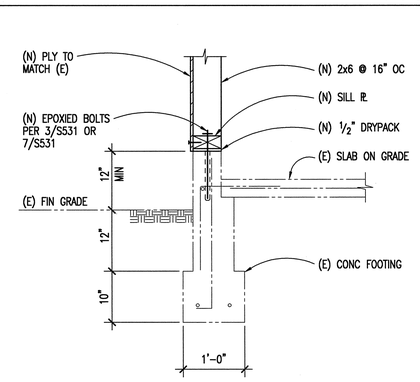

(N) WALL FRAMING AT (E) FOOTING

1"=1'-0" **9**

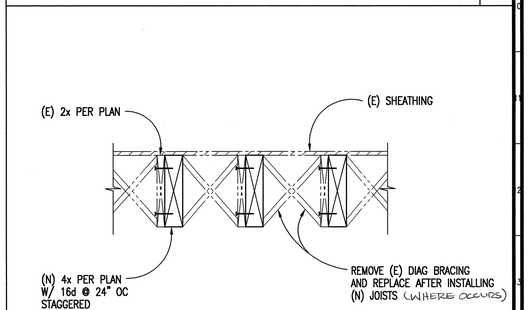

SECTION AT JOISTS

1"=1'-0" **3**

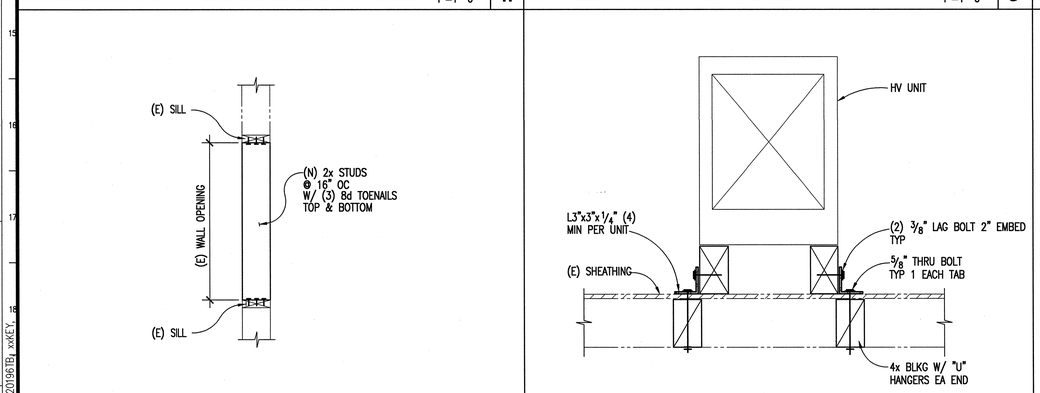

INFILL FRAMING AT WALL OPENING

1"=1'-0" **12**

MECH UNIT ON MEZZANINE FLOOR

1"=1'-0" **10**

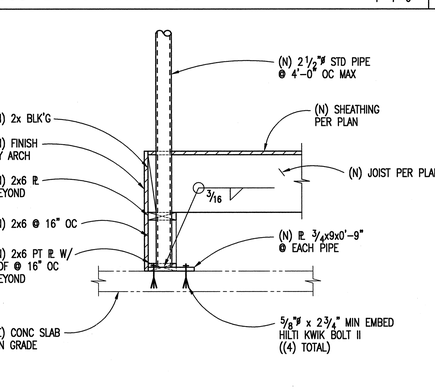

SECTION DETAIL AT GUARDRAIL

1"=1'-0" **7**

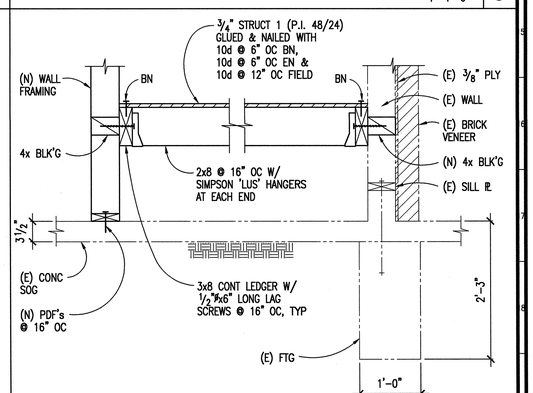

TYP RAMP FRAMING SECTION

1"=1'-0" **4**

IDENTIFICATION STAMP
DIV. OF THE STATE ARCHITECT
OFFICE OF REGULATION SERVICES
FILE NO. 19-H51
APPL. NO. 03-106434
AC. FLS. SS
DATE JAN 30 2003

Dougherty ■ Dougherty
Architecture · Planning · Interior Design
3194-D Airport Loop Drive
Costa Mesa, CA 92626
(714) 427-0277

Copyright © 2002 Dougherty + Dougherty

kpff Consulting Engineers
9400 Von Karman Avenue, Suite 100
Irvine, California 92612-1258
(949) 250-1222 Fax (949) 250-0032

Architect Seal

Consultant Seal

LA MIRADA HIGH SCHOOL
MODERNIZATION - PHASE 1A
NORWALK - LA MIRADA UNIFIED SCHOOL DISTRICT
13352 ADELFA AVENUE LA MIRADA, CA 90638

WOOD DETAILS

Date:	1-30-03
Job:	12-0196
Scale:	AS NOTED
Drawn:	
Revisions:	

S533

NOTES:							
JOB #	JOB NAME	FILE PATH & NAME	PLOTTED DATE & TIME	UPDATED BY	PLOT SCALE	PROG.MG.	DRAFTER
12-0196	LA MIRADA HIGH	I:\PROJECTS\2002\12-0196\S533.DWG	JAN. 30, 2003 1:02:23 AM	---	1=1	B.T.	F.C.

XREFS: x12019678; xxKEY;

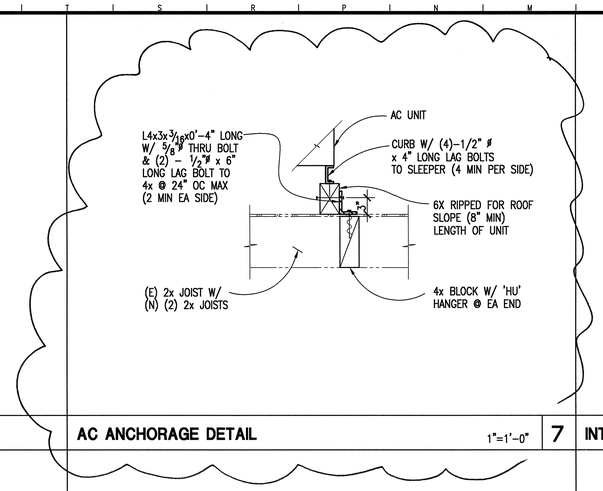

AC ANCHORAGE DETAIL

1"=1'-0" | 7

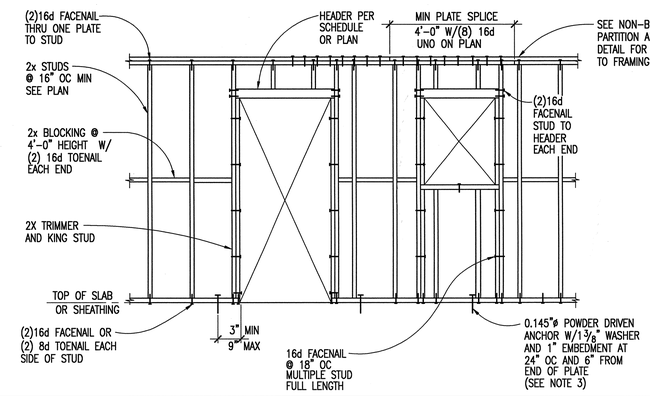

HEADER SCHEDULE (SEE NOTE 1)	
OPN'G WIDTH	HEADER
UP TO 4'-0"	4x4
6'-0" TO 8'-0"	4x6
8'-0" TO 10'-0"	4x10

NOTE:

1. HEADERS, KINGSTUDS AND OTHER REFERENCES ON PLAN GOVERN OVER TYPICAL DETAIL.
2. INSTALL 1x6 DIAGONAL LET-IN BRACE AT 25'-0" AND AT EACH END IN ALL WALLS NOT PLYWOOD SHEATHED, MAXIMUM SLOPE OF DIAGONAL SHALL BE 2 VERTICAL TO 1 HORIZONTAL.
3. NAIL SILL PLATE TO WOOD FRAMED FLOORS WITH 16d @ 12" OC TO BLOCKING BELOW SHEATHING.

INTERIOR NON-BEARING STUD WALL FRAMING

1/2"=1'-0" | 1

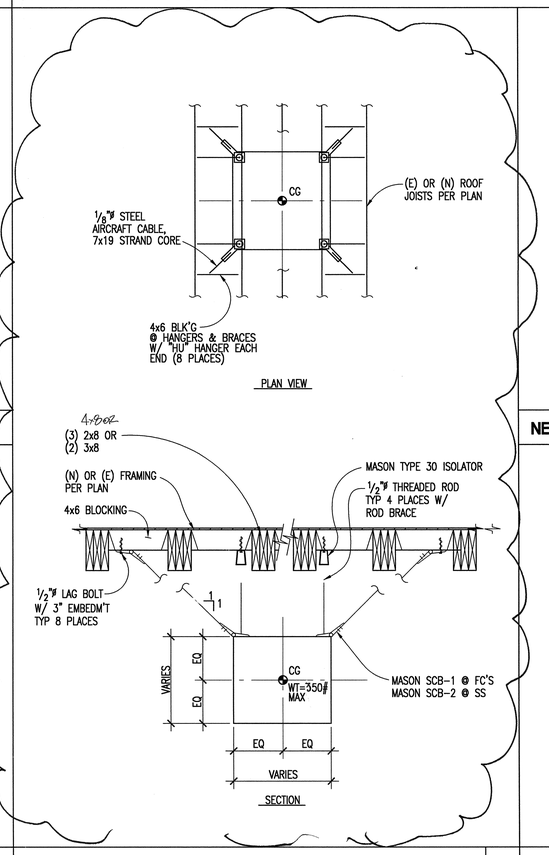

TYP SUSPENDED MECHANICAL UNIT AT BLD'G R

1"=1'-0" | 5

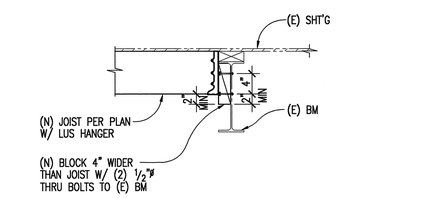

NEW JOIST TO EXISTING BEAM

1"=1'-0" | 2

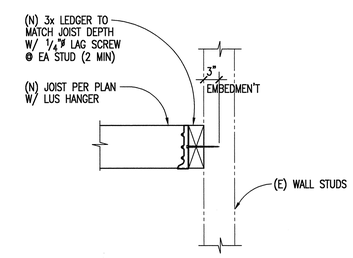

NEW JOIST TO EXISTING STUD WALL

1"=1'-0" | 3

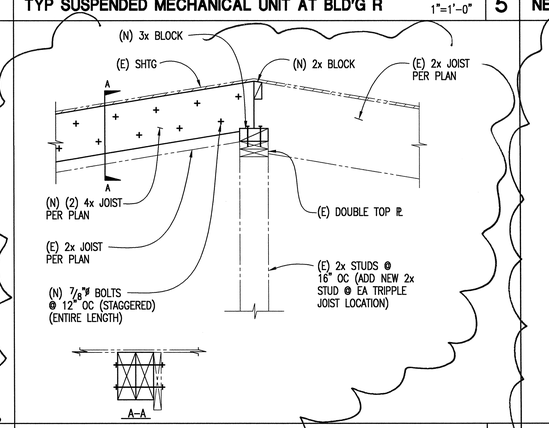

NEW JOIST AT (E) JOIST

1"=1'-0" | 6

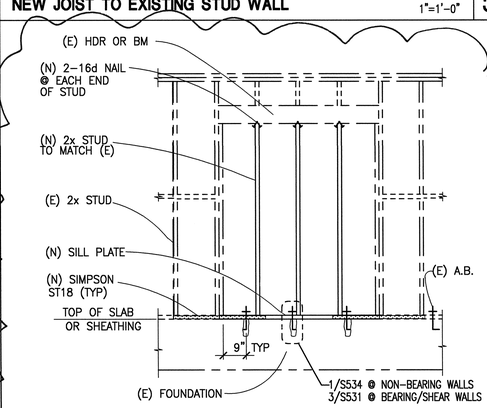

DOOR INFILL

1"=1'-0" | 4

REVISED MAY 12 2004

IDENTIFICATION STAMP
DIV. OF THE STATE ARCHITECT
OFFICE OF REGULATION SERVICES
FILE NO. 19-H51
APPL. NO. 03-106434
AC.____ FLS. NCT SS.____
DATE ____

Dougherty ■ Dougherty
Architecture · Planning · Interior Design
3194-D Airport Loop Drive
Costa Mesa, CA 92626
(714) 427- 0277

Copyright © 2002 Dougherty + Dougherty

kpff Consulting Engineers
8400 Ton Kamran Avenue, Suite 100
Huntington Beach, California 92648
(949) 252-1022 Fax (949) 252-9282

Architect Seal

Consultant Seal

LA MIRADA HIGH SCHOOL
MODERNIZATION - PHASE 1A
NORWALK - LA MIRADA UNIFIED SCHOOL DISTRICT
13352 ADELFA AVENUE LA MIRADA, CA 90638

WOOD DETAILS

Date:	1-30-03
Job:	12-0196
Scale:	AS NOTED
Drawn:	
Revisions:	

S534

NOTES:						
JOB #	JOB NAME	FILE PATH & NAME	PLOTTED DATE & TIME	UPDATED BY	PLOT SCALE	PROG.MG.	DRAFTER
12-0196	LA MIRADA HIGH	I:\PROJECTS\2002\12-0196\S534.DWG	MAR. 29, 2004 5:03:34 PM	---	1=1	B.T.	F.C.
XREFS:	12019BTB, xxREV,						

EXHAUST FAN SCHEDULE

SYMBOL	MANUFACTURER & MODEL NO.	FAN TYPE	LOCATION	CFM	E.S.P. IN. H2O	VOLTAGE	FAN MOTOR H.P.	FAN RPM	OPER. WT. (LBS.)	REMARKS
EF AB1	COOK ACE-B 135C3B	BELT DRIVE CENTRIF.	SEE PLAN	1300	0.5	120V-1ø-60Hz	1/4	1128	110	PROVIDE FACTORY PRE-FAB ROOF MOUNTING CURB, BUILT-IN DISCONNECT SWITCH AND AUTOMATIC BACKDRAFT DAMPER. SEE DETAIL 4/M201
EF EF1	COOK ACE-B 135C3B	BELT DRIVE CENTRIF.	SEE PLAN	1400	0.5	120V-1ø-60Hz	1/4	1179	110	PROVIDE FACTORY PRE-FAB ROOF MOUNTING CURB, BUILT-IN DISCONNECT SWITCH AND AUTOMATIC BACKDRAFT DAMPER. SEE DETAIL 4/M201
EF UI1	COOK ACE-B 135C3B	BELT DRIVE CENTRIF.	SEE PLAN	1075	0.5	120V-1ø-60Hz	1/4	1031	110	PROVIDE FACTORY PRE-FAB ROOF MOUNTING CURB, BUILT-IN DISCONNECT SWITCH AND AUTOMATIC BACKDRAFT DAMPER. SEE DETAIL 4/M201
EF K1	COOK ACE-B 100C2B	BELT DRIVE CENTRIF.	SEE PLAN	330	0.25	120V-1ø-60Hz	1/6	977	100	PROVIDE FACTORY PRE-FAB ROOF MOUNTING CURB, BUILT-IN DISCONNECT SWITCH AND AUTOMATIC BACKDRAFT DAMPER. SEE DETAIL 4/M201
EF K2	COOK ACE-B 60C2B	BELT DRIVE CENTRIF.	SEE PLAN	50	0.25	120V-1ø-60Hz	1/6	957	60	PROVIDE FACTORY PRE-FAB ROOF MOUNTING CURB, BUILT-IN DISCONNECT SWITCH AND AUTOMATIC BACKDRAFT DAMPER. SEE DETAIL 4/M201
EF K3	COOK ACE-B 70C2B	BELT DRIVE CENTRIF.	SEE PLAN	185	0.25	120V-1ø-60Hz	1/6	1206	60	PROVIDE FACTORY PRE-FAB ROOF MOUNTING CURB, BUILT-IN DISCONNECT SWITCH AND AUTOMATIC BACKDRAFT DAMPER. SEE DETAIL 4/M201
EF K4	COOK ACE-B 100C2B	BELT DRIVE CENTRIF.	SEE PLAN	595	0.375	120V-1ø-60Hz	1/6	1384	100	PROVIDE FACTORY PRE-FAB ROOF MOUNTING CURB, BUILT-IN DISCONNECT SWITCH AND AUTOMATIC BACKDRAFT DAMPER. SEE DETAIL 4/M201 INTERLOCK W/ MZ/K1. 1
EF K5	COOK VENT SET-CW UB 270 CPA	BELT DRIVE CENTRIF.	SEE PLAN	8000	1.0	208V-3ø-60Hz	3	836	800	PROVIDE MOTOR WEATHER COVER, SPRING ISOLATORS DRAIN HOLE AND BUILT-IN DISCONNECT SWITCH. FAN SHALL BE CONTROLLED BY MZ/K1.
EF L1	COOK VENT SET-CCW UB CPV-120	BELT DRIVE CENTRIF.	SEE PLAN	1460	0.25	120V-1ø-60Hz	1/3	1555	275	PROVIDE DRAIN OPENING. CONNECT TO SWITCH @ EXISTING FUME HOOD BACKDRAFT DAMPER. SEE DETAIL 7/M202
EF M1	COOK ACE-B 100C2B	BELT DRIVE CENTRIF.	SEE PLAN	350	0.25	120V-1ø-60Hz	1/6	989	100	PROVIDE FACTORY PRE-FAB ROOF MOUNTING CURB, BUILT-IN DISCONNECT SWITCH AND AUTOMATIC BACKDRAFT DAMPER. SEE DETAIL 4/M201
EF N1	COOK GEMINI GC-240	DIRECT DRIVE CENTRIF.	SEE PLAN	99	0.25	120V-1ø-60Hz	56 WATTS	1200	20	PROVIDE CURB MOUNT-ROOF CAP SEE DETAIL 4/M202
EF O1	COOK ACE-B 100C2B	BELT DRIVE CENTRIF.	SEE PLAN	512	0.25	120V-1ø-60Hz	1/6	1164	100	PROVIDE FACTORY PRE-FAB ROOF MOUNTING CURB, BUILT-IN DISCONNECT SWITCH AND AUTOMATIC BACKDRAFT DAMPER. SEE DETAIL 4/M201 1
EF O2	COOK ACE-B 80C2B	BELT DRIVE CENTRIF.	SEE PLAN	236	0.25	120V-1ø-60Hz	1/6	935	80	PROVIDE FACTORY PRE-FAB ROOF MOUNTING CURB, BUILT-IN DISCONNECT SWITCH AND AUTOMATIC BACKDRAFT DAMPER. SEE DETAIL 4/M201
EF P1 & EF P1	COOK ACE-B 80C2B	BELT DRIVE CENTRIF.	SEE PLAN	283	0.25	120V-1ø-60Hz	1/6	1004	80	PROVIDE FACTORY PRE-FAB ROOF MOUNTING CURB, BUILT-IN DISCONNECT SWITCH AND AUTOMATIC BACKDRAFT DAMPER. SEE DETAIL 4/M201
EF Q1	COOK ACE-B 120C2B	BELT DRIVE CENTRIF.	SEE PLAN	710	0.375	120V-1ø-60Hz	1/6	992	100	PROVIDE FACTORY PRE-FAB ROOF MOUNTING CURB, BUILT-IN DISCONNECT SWITCH AND AUTOMATIC BACKDRAFT DAMPER. SEE DETAIL 4/M201
EF R1	COOK ACE-B 70C2B	BELT DRIVE CENTRIF.	SEE PLAN	230	0.25	120V-1ø-60Hz	1/6	1360	70	PROVIDE FACTORY PRE-FAB ROOF MOUNTING CURB, BUILT-IN DISCONNECT SWITCH AND AUTOMATIC BACKDRAFT DAMPER. SEE DETAIL 4/M201
EF R2	COOK ACE-B 100C2B	BELT DRIVE CENTRIF.	SEE PLAN	400	0.25	120V-1ø-60Hz	1/6	1031	100	PROVIDE FACTORY PRE-FAB ROOF MOUNTING CURB, BUILT-IN DISCONNECT SWITCH AND AUTOMATIC BACKDRAFT DAMPER. SEE DETAIL 4/M201
EF R3 & EF R4	COOK ACE-B 180C5B	BELT DRIVE CENTRIF.	SEE PLAN	2830	0.25	120V-1ø-60Hz	1/2	869	160	PROVIDE FACTORY PRE-FAB ROOF MOUNTING CURB, BUILT-IN DISCONNECT SWITCH AND AUTOMATIC BACKDRAFT DAMPER. SEE DETAIL 4/M201
EF R5 & EF R6	COOK ACE-B 180C4B	BELT DRIVE CENTRIF.	SEE PLAN	2450	0.25	120V-1ø-60Hz	1/3	777	160	PROVIDE FACTORY PRE-FAB ROOF MOUNTING CURB, BUILT-IN DISCONNECT SWITCH AND AUTOMATIC BACKDRAFT DAMPER. SEE DETAIL 4/M201
EF T1	COOK ACE-B 100C2B	BELT DRIVE CENTRIF.	SEE PLAN	520	0.25	120V-1ø-60Hz	1/6	1295	100	PROVIDE FACTORY PRE-FAB ROOF MOUNTING CURB, BUILT-IN DISCONNECT SWITCH AND AUTOMATIC BACKDRAFT DAMPER. SEE DETAIL 4/M201 1

LEGEND & SYMBOLS

SYMBOL	ABB.	DESCRIPTION
	SAD	SUPPLY AIR DUCT
	RAD	RETURN AIR DUCT
	OSA	OUTSIDE AIR DUCT
	EAD	EXHAUST AIR DUCT
	CA	COMBUSTION AIR
	(L)	(INTERNALY) LINED DUCTWORK
	CD	CEILING DIFFUSER
	RAR	RETURN AIR REGISTER
	RAG	RELIEF AIR GRILLE
	EAR	EXHAUST AIR REGISTER
	SWS	SIDEWALL SUPPLY AIR REGISTER
	SWR	SIDEWALL RETURN AIR REGISTER
	SWE	SIDEWALL EXHAUST AIR REGISTER
	SWG	SIDEWALL RELIEF AIR GRILLE
	P.O.C.	POINT OF CONNECTION
	P.O.R.	POINT OF REMOVAL
	FC	FLEXIBLE CONNECTION
F	AFD	AUTOMATIC FIRE DAMPER
	MVD	MANUAL VOLUME DAMPER
	F.D.	FLEX-DUCT CONNECTION
DL	DL	DOOR LOUVER
UC	UC	UNDERCUT DOOR
T	T-STAT	THERMOSTAT: (MOUNTING HEIGHT:) CENTERLINE OF T-STAT : 48"MAX. ABV. FIN FLR. OVER OBSTRUCTION : TOP OF T-STAT 46"MAX. ABV. FIN. FLR.
BT	BY/SW	BY-PASS TIMER/SELECTION SWITCH
SD	SD	SMOKE DECTECTOR IN MECH DUCT
SF	SF	COMBINATION SMOKE / FIRE DAMPER
	GC	GENERAL CONTRACTOR
	UTR	UP THROUGH ROOF
(E)	EXIST.	EXISTING
		EXISTING TO BE REMOVED

AIR DISTRIBUTION SCHEDULE

MFR. MODEL	SIZE	C.F.M. CAPACITY	MAX. NECK VEL	MAX. N.C.	MAX. S.P. DROP	REMARKS
ANEMOSTAT MODEL RMD SERIES S-1	8 X 8	0 – 180	400	13	.06	PROVIDE OPPOSED BLADE VOLUME DAMPERS ON ALL DIFFUSERS.
	10 X 10	181 – 280		13	.06	
	12 X 12	281 – 400		16	.06	
	14 X 14	401 – 550		17	.06	
	16 X 16	551 – 720		18	.06	RMD-FP FOR LAY-IN T-BAR CEILINGS.
	18 X 18	721 – 910		19	.06	
	20 X 20	911 – 1120		20	.06	RMD-S FOR GYPBOARD CEILINGS.
	22 X 22	1121 – 1370		21	.06	
	24 X 24	1371 – 1800		22	.06	
ANEMOSTAT MODEL GC50L R-1 G-1	8 X 8	0 – 180	400	15	.03	PROVIDE OPPOSED BLADE DAMPERS.
	10 X 10	181 – 280		15	.03	
	12 X 12	281 – 400		15	.03	
	14 X 14	401 – 550		15	.03	
	16 X 16	551 – 720		15	.03	
	18 X 18	721 – 910		15	.03	
	20 X 20	911 – 1120		15	.03	
	22 X 22	1121 – 1370		15	.03	
	24 X 24	1371 – 1800		15	.03	
	24 X 48	1801 – 3000		15	.03	

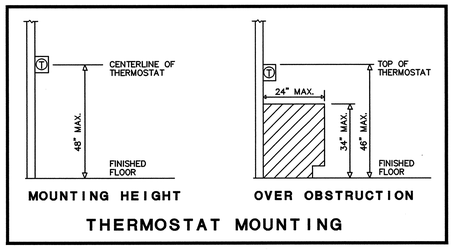

THERMOSTAT MOUNTING

GENERAL NOTES

1. ENTIRE INSTALLATION SHALL CONFORM TO THE REQUIREMENTS OF THE CALIF. MECHANICAL CODE, CALIF. BUILDING CODE, AND ALL OTHER APPLICABLE CODES AND REGULATIONS, INCLUDING CALIFORNIA ENERGY CONSERVATION STANDARDS DIVISION T-24.
2. COORDINATE ENTIRE INSTALLATION OF THE H.V.A.C. SYSTEM WITH THE WORK OF ALL OTHER TRADES PRIOR TO ANY FABRICATION OR INSTAL-LATION. PROVIDE ALL FITTINGS, OFFSETS, AND TRANSITIONS AS REQUIRED FOR A COMPLETE WORKABLE INSTALLATION.
3. COORDINATE THE LOCATION OF ALL CEILING DIFFUSERS, REGISTERS AND GRILLES WITH THE ARCHITECTURAL REFLECTED CEILING PLAN, ELECTRICAL LIGHTING LAYOUT AND ARCHITECTURAL ROOM ELEVATIONS.
4. COORDINATE THE LOCATION OF ALL ROOF OPENINGS AND THE LOCATION OF ALL ROOF MOUNTED EQUIPMENT WITH THE STRUCTURAL AND ARCHITECTURAL PLANS PRIOR TO ANY INSTALLATION. MECHANICAL TO PROVIDE EQUIPMENT WEIGHTS, PLATFORM AND CURB SIZES.
5. PLATFORMS, CURBS AND FLASHINGS FOR MECHANICAL EQUIPMENT SHALL BE AS INDICATED ON THE STRUCTURAL AND ARCHITECTURAL PLANS, UNLESS NOTES OTHERWISE.
6. ALL EQUIPMENT SHALL BE INSTALLED IN STRICT ACCORDANCE WITH THE EQUIPMENT MANUFACTURER'S RECOMMENDATIONS. PROVIDE ALL FIT-TINGS, TRANSITIONS, DAMPERS, VALVES, AND OTHER DEVICES REQUIRED FOR A COMPLETE WORKABLE INSTALLATION.
7. MAINTENANCE LABEL SHALL BE AFFIXED TO ALL MECHANICAL EQUIPMENT AND A MAINTENANCE MANUAL SHALL BE PROVIDED FOR THE OWNER'S USE.
8. CONTROL SCHEMATICS ARE FOR SEQUENCY ONLY. REFER TO ELECTRICAL DRAWINGS AND SPECIFICATIONS FOR ALL ELECTRICAL DEVICES REQUIRED.
   (a) ALL AIR CONDITIONING UNIT SUPPLY FANS SHALL BE WIRED FOR CONSTANT BLOWER OPERATION.
   (b) ALL LOW VOLTAGE WIRING, INCLUDING FINAL CONNECTIONS TO CONTROL DEVICES AND EQUIPMENT, SHALL BE AS INDICATED ON THE MECHANICAL DRAWINGS OR SPECIFIED IN THE MECHANICAL SECTIONS OF THE SPECIFICATIONS. ALL LOW VOLTAGE WIRING SHALL BE A MINIMUM OF FOURTEEN (14) GAUGE.
   (c) ALL LOW VOLTAGE WIRING SHALL BE INSTALLED IN CONDUIT. ALL CONDUIT FOR LINE AND LOW VOLTAGE WIRING AND ALL LINE VOLTAGE WIRING, INCLUDING FINAL CONNECTIONS, SHALL BE AS INDICATED ON THE ELECTRICAL DRAWINGS OR SPECIFIED IN THE ELECTRICAL SECTION OF THE SPECIFICATIONS. ALL ELECTRICAL WORK SHALL BE INSTALLED IN ACCORDANCE WITH ALL APPLICABLE CODES AND REGULATIONS OF ALL GOVERNING BODIES HAVING JURISDICTION THEREOF.
   (d) (E) INDICATES ITEMS FURNISHED & INSTALLED ON THE ELECTRICAL DRAWINGS OR SPECIFIED IN THE ELECTRICAL SECTIONS OF THE SPECIFICATIONS.
   (e) (M) INDICATES ITEMS FURNISHED & INSTALLED ON THE MECHANICAL DRAWINGS OR SPECIFIED IN THE MECHANICAL SECTIONS OF THE SPECIFICATIONS.
9. ALL THERMOSTATS SHALL BE OF THE AUTOMATIC CHANGEOVER TYPE TO SEQUENCE HEATING OR COOLING. SET POINT RANGE SHALL BE 10° F. BETWEEN FULL HEATING AND COOLING. ADJUSTABLE TEMPERATURE DIFFERENTIAL SHALL BE 1-1/2° F. CONTROL LIMITS SHALL BE FROM 55° F. TO 85° F. MOUNT AT 48 INCHES ABOVE FLOOR.
10. ALL DUCTWORK SHALL BE CONSTRUCTED, ERECTED AND TESTED IN ACCORDANCE WITH THE MOST RESTRICTIVE OF LOCAL REGULATIONS, PROCEDURES DETAILED IN THE ASHRAE HANDBOOK OF FUNDAMENTALS OR THE APPLICABLE STANDARDS ADOPTED BY THE SHEET METAL AND AIR CONDITIONING CONTRACTORS NATIONAL ASSOCIATION.
11. DUCTWORK SHALL BE INSULATED OR LINED (L) PER SPECIFICATIONS OR AS NOTED ON DRAWINGS. ALL DUCTWORK EXPOSED ON ROOF SHALL BE INTERNALLY LINED UNLESS OTHERWISE INDICATED OR SPECIFIED. ALL DUCT SIZES ARE SHEET METAL SIZES. ALL DUCT JOINTS SHALL BE SEALED PER SPECIFICATIONS.
12. MANUAL VOLUME DAMPERS SHALL BE PROVIDED IN ALL DUCT BRANCHES TO INDIVIDUAL DIFFUSERS, GRILLES AND REGISTERS.
13. ALL EQUIPMENT, DUCTS, PIPING, AND OTHER DEVICES AND MATERIALS INSTALLED OUTSIDE OF THE BUILDING OR OTHERWISE EXPOSED TO THE WEATHER SHALL BE COMPLETELY WEATHERPROOFED.
14. PROVIDE ONE INCH (1") THICK FARR 30/30 THROWAWAY FILTERS FOR ALL AIR CONDITIONING UNITS. SIZE AND TYPE AS RECOMMENDED BY THE MANUFACTURER, UNLESS OTHERWISE NOTED.
15. AUTOMATIC FIRE DAMPER REQUIREMENTS ARE AS FOLLOWS:
   (a) PROVIDE AUTOMATIC FIRE DAMPERS AT ALL REQUIRED PENETRATIONS OF FIRE-RATED CEILINGS AND WALLS THROUGHOUT. CONTRACTOR SHALL COORDINATE WITH FIRE-RATED CEILING AREAS AND WALLS, AS INDICATED ON ARCHITECTURAL DRAWINGS. THIS NOTE SHALL TAKE PRECEDENCE OVER ANY OMISSIONS ON THE DRAWINGS. SEE SPECIFICATIONS.
   (b) LOCATION OF FIRE-RATED CEILINGS AND WALLS ARE AS INDICATED ON THE ARCHITECTURAL DRAWINGS.
17. FOR ROOF AND WALL PENETRATION DETAILS AND REQUIREMENTS SEE STRUCTURAL DRAWINGS.
18. CONCEALED DUCTWORK HANDLING CONDITIONED AIR SHALL BE INSULATED OR LINED. SUPPLY DUCT INSULATION SHALL BE 2" THICK, 3/4 LB./CUBIC FT. DENSITY. RETURN DUCT INSULATION SHALL BE 1" THICK 3/4 LB./CU.FT. DENSITY. ALL DUCTWORK EXPOSED ON ROOF SHALL BE INTERNALLY LINED UNLESS OTHERWISE INDICATED OR SPECIFIED. ALL DUCT SIZES ARE SHEET METAL SIZES. ALL DUCT JOINTS SHALL BE SEALED PER SPECIFICATIONS.
19. THESE DRAWINGS SHALL BE READ IN CONJUNCTION WITH AND BE CONSIDERED TO BE PART OF A SEPARATE AND COMPLETE MECHANICAL SPECIFICATION.
20. ALL HVAC EQUIPMENT SHALL BE CERTIFIED BY THE CALIFORNIA ENERGY COMMISSION TO COMPLY WITH EFFICIENCY STANDARDS PER TITLE 24, SECTION 112
21. SHUTOFF FOR SMOKE CONTROL

    AIR-MOVING SYSTEMS SUPPLYING AIR IN EXCESS OF 2,000 CUBIC FEET PER MINUTE TO ENCLOSED SPACES WITHIN BUILDINGS SHALL BE EQUIPPED WITH AN AUTOMATIC SHUTOFF. AUTOMATIC SHUTOFF SHALL BE ACCOMPLISHED BY INTERRUPTING THE POWER SOURCE OF THE AIR-MOVING EQUIPMENT UPON DETECTION OF SMOKE IN THE MAIN SUPPLY AIR DUCT SERVED BY SUCH EQUIPMENT. SMOKE DETECTORS SHALL BE LABELED BY AN APPROVED AGENCY FOR AIR DUCT INSTALLATION AND SHALL BE INSTALLED IN ACCORDANCE WITH THE MANUFACTURER'S INSTALLATION AND SHALL BE INSTALLED IN ACCORDANCE WITH THE MANUFACTURER'S INSTALLATION INSTRUCTIONS. SUCH DEVICES SHALL BE COMPATIBLE WITH THE OPERATING VELOCITIES, PRESSURES, TEMPERATURES AND HUMIDITIES OF THE SYSTEM. WHERE FIRE DETECTION OR ALARM SYSTEMS ARE PROVIDED FOR THE BUILDING, THE SMOKE DETECTORS REQUIRED BY THIS SECTION SHALL BE SUPERVISED BY SUCH SYSTEMS AND SHALL ACTIVATE THE FIRE ALARM SYSTEMS.
22. ALL MECHANICAL DUCTS AND PIPES SHALL BE SUPPORTED AND BRACED PER "SMACNA" GUILDELINES, OSHPD PRE-APPROVAL NO. R0010

SEISMIC NOTES

1. THE SEISMIC ANCHORAGE OF MECHANICAL AND ELECTRICAL EQUIPMENT SHALL CONFORM TO C.C.R. TITLE 24, 1998 C.B.C. SECTION 1632A AND TABLE 16A-O.
2. ALL MECHANICAL EQUIPMENT SHALL BE BRACED OR ANCHORED TO RESIST A HORIZONTAL FORCE ACTING IN ANY DIRECTION. REFER TO TITLE NO. 24, PART 2, TABLE 7-41 FOR EXACT REQUIREMENTS.

REVISED MAY 12 2003

IDENTIFICATION STAMP
DIV. OF THE STATE ARCHITECT
OFFICE OF REGULATION SERVICES
FILE NO. 19-H51
APPL. NO. 03-106434
AC. FLS. MCT SS.
DATE

Dougherty ■ Dougherty
Architecture • Planning • Interior Design
3194-D Airport Loop Drive
Costa Mesa, CA 92626
(714) 427-0277

Copyright © 2002 Dougherty + Dougherty

FTA
F.T. ARCHITECTS
831 S. Harbor Blvd
Anaheim, CA 92805
Phone: (714) 772-2789
Fax: (714) 772-2793
Job Number: 22004

Architect Seal

Consultant Seal

LA MIRADA HIGH SCHOOL
MODERNIZATION
NORWALK - LA MIRADA UNIFIED SCHOOL DISTRICT
13520 ADELFA DRIVE LA MIRADA, CA 90638

MECHANICAL
SCHEDULES
LEGEND & NOTES

Date:	04-01-04
Job:	20237.50
Scale:	NONE
Drawn:	
Revisions:	
1	12-01-03

M000

FORCED AIR UNIT SCHEDULE

LOCATION	SYMBOL	MANUFACTURER & MODEL NO.	SUPPLY FAN C.F.M.	SUPPLY FAN EXT. S.P.	SUPPLY FAN SPEED	HEATING CAPACITY (BTUH)	AFUE (%)	FLUE SIZE	COOLING COIL SYMBOL	COOLING COIL MANUF. MODEL NO.	ELECTRICAL VOLTAGE / PHASE	ELECTRICAL MCA-H.P.	ELECTRICAL MOCP	MIN. OSA CFM	OPER. WT. (LBS)	REMARKS
BUILDING "A & B"	FAU AB1, FAU AB2, FAU AB4, FAU AB6, FAU AB7, FAU AB8, FAU AB9	"CARRIER" 58MXA080-16 horizontal	1400	0.6"	HIGH	80,000 INPUT 75,000 OUTPUT	92.5	SEE PLAN	C AB1, C AB2, C AB4, C AB6, C AB7, C AB8, C AB9	"CARRIER" CK3B048	115 / 1ø	13.4-1/2	15.0	450	250	SEE NOTE 1 2 BELOW SEE DETAIL 3/M201
BUILDING "A & B"	FAU AB3, FAU AB5, FAU AB10	"CARRIER" 58MXA080-20 horizontal	1800	0.6"	HIGH	80,000 INPUT 75,000 OUTPUT	92.5	SEE PLAN	C AB3, C AB5, C AB10	"CARRIER" CK3B060	115 / 1ø	18.4-3/4	20.0	450	250	SEE NOTE 1 2 BELOW SEE DETAIL 3/M201
BUILDING "C & D"	FAU CD1, FAU CD2, FAU CD4, FAU CD5, FAU CD6	"CARRIER" 58MXA080-16 horizontal	1400	0.6"	HIGH	80,000 INPUT 75,000 OUTPUT	92.5	SEE PLAN	C CD1, C CD2, C CD4, C CD5, C CD6	"CARRIER" CK3B048	115 / 1ø	13.4-1/2	15.0	450	250	SEE NOTE 1 2 BELOW SEE DETAIL 3/M201
BUILDING "C & D"	FAU CD3	"CARRIER" 58MXA080-20 horizontal	1800	0.6"	HIGH	80,000 INPUT 75,000 OUTPUT	92.5	SEE PLAN	C CD3	"CARRIER" CK3B060	115 / 1ø	18.4-3/4	20.0	450	250	SEE NOTE 1 2 BELOW SEE DETAIL 3/M201
BUILDING "C & D"	FAU CD7	"CARRIER" 58MXA060-12 horizontal	1100	0.6"	HIGH	60,000 INPUT 56,000 OUTPUT	92.5	SEE PLAN	C CD7	"CARRIER" CK3B036	115 / 1ø	9.8-1/3	20.0	150	220	SEE NOTE 1 2 BELOW SEE DETAIL 3/M201
BUILDING "E & F"	FAU EF1, FAU EF2, FAU EF5, FAU EF6, FAU EF7, FAU EF8, FAU EF9	58MXA080-16 horizontal	1400	0.6"	HIGH	80,000 INPUT 75,000 OUTPUT	92.5	SEE PLAN	C EF1, C EF2, C EF5, C EF6, C EF7, C EF8, C EF9	"CARRIER" CK3B048	115 / 1ø	13.4-1/2	15.0	450	250	SEE NOTE 1 2 BELOW SEE DETAIL 3/M201
BUILDING "E & F"	FAU EF3, FAU EF4	"CARRIER" 58MXA080-20 horizontal	1800	0.6"	HIGH	80,000 INPUT 75,000 OUTPUT	92.5	SEE PLAN	C EF3, C EF4	"CARRIER" CK3B060	115 / 1ø	18.4-3/4	20.0	450	250	SEE NOTE 1 2 BELOW SEE DETAIL 3/M201
BUILDING "G & H"	FAU GH1, FAU GH2, FAU GH3, FAU GH5, FAU GH6, FAU GH7, FAU GH10	"CARRIER" 58MXA080-16 horizontal	1400	0.6"	HIGH	80,000 INPUT 75,000 OUTPUT	92.5	SEE PLAN	C GH1, C GH2, C GH3, C GH5, C GH6, C GH7, C GH10	"CARRIER" CK3B048	115 / 1ø	13.4-1/2	15.0	450	250	SEE NOTE 1 2 BELOW SEE DETAIL 3/M201
BUILDING "G & H"	FAU GH4, FAU GH8, FAU GH9	"CARRIER" 58MXA080-20 horizontal	1800	0.6"	HIGH	80,000 INPUT 75,000 OUTPUT	92.5	SEE PLAN	C GH4, C GH8, C GH9	"CARRIER" CK3B060	115 / 1ø	18.4-3/4	20.0	450	250	SEE NOTE 1 2 BELOW SEE DETAIL 3/M201
BUILDING "G & H"	FAU GH11	"CARRIER" 58MXA060-12 horizontal	1100	0.6"	HIGH	60,000 INPUT 56,000 OUTPUT	92.5	SEE PLAN	C GH11	"CARRIER" CK3B036	115 / 1ø	9.8-1/3	20.0	150	220	SEE NOTE 1 2 BELOW MATCHING CONDENSING UNIT: CU/CD12 SEE DETAIL 3/M201
BUILDING "I & J"	FAU IJ1, FAU IJ3, FAU IJ4, FAU IJ5, FAU IJ6	"CARRIER" 58MXA080-16 horizontal	1400	0.6"	HIGH	80,000 INPUT 75,000 OUTPUT	92.5	SEE PLAN	C IJ1, C IJ3, C IJ4, C IJ5, C IJ6	"CARRIER" CK3B048	115 / 1ø	13.4-1/2	15.0	450	250	SEE NOTE 1 2 BELOW SEE DETAIL 3/M201
BUILDING "I & J"	FAU IJ2	"CARRIER" 58MXA080-20 horizontal	1800	0.6"	HIGH	80,000 INPUT 75,000 OUTPUT	92.5	SEE PLAN	C IJ2	"CARRIER" CK3B060	115 / 1ø	18.4-3/4	20.0	450	250	SEE NOTE 1 2 BELOW SEE DETAIL 3/M201
BUILDING "L"	FAU L1, FAU L2, FAU L3, FAU L4, FAU L5, FAU L6	"CARRIER" 58MXA080-20 horizontal	1800	0.6"	HIGH	80,000 INPUT 75,000 OUTPUT	92.5	SEE PLAN	C L1, C L2, C L3, C L4, C L5, C L6	"CARRIER" CK3B060	115 / 1ø	18.4-3/4	20.0	450	250	SEE NOTE 1 2 BELOW SEE DETAIL 3/M201
BUILDING "L"	FAU L7	"CARRIER" 58MXA060-12 horizontal	1100	0.6"	HIGH	60,000 INPUT 56,000 OUTPUT	92.5	SEE PLAN	C L7	"CARRIER" CK3B036	115 / 1ø	9.8-1/3	20.0	150	220	SEE NOTE 1 2 BELOW SEE DETAIL 3/M201
BUILDING "M"	FAU M1, FAU M2, FAU M3, FAU M4, FAU M5, FAU M6	"CARRIER" 58MXA080-20 horizontal	1800	0.6"	HIGH	80,000 INPUT 75,000 OUTPUT	92.5	SEE PLAN	C M1, C M2, C M3, C M4, C M5, C M6	"CARRIER" CK3B060	115 / 1ø	18.4-3/4	20.0	450	250	SEE NOTE 1 2 BELOW SEE DETAIL 3/M201
BUILDING "O"	FAU O1	"CARRIER" 58MXA080-20 horizontal	1800	0.6"	HIGH	80,000 INPUT 75,000 OUTPUT	92.5	SEE PLAN	C O1	"CARRIER" CK3B060	115 / 1ø	18.4-3/4	20.0	450	250	SEE NOTE 1 2 BELOW SEE DETAIL 3/M201
BUILDING "T"	FAU T1, FAU T2	"CARRIER" 58MXA080-16 horizontal	1400	0.6"	HIGH	80,000 INPUT 75,000 OUTPUT	92.5	SEE PLAN	C T1, C T2	"CARRIER" CK3B048	115 / 1ø	13.4-1/2	15.0	450	250	SEE NOTE 1 2 BELOW SEE DETAIL 3/M201

NOTES : 1 UNIT TO COMPLETE FACTORY ASSEMBLED, TESTED, & READY FOR INSTALLATION WITH ALL CONTROLS INSTALLED FOR NATURAL GAS HEATING & DX COOLING OPERATION

2 PROVIDE UNIT WITH, 1" THICK "FARR" 30/30 DISPOSABLE FILTERS OF NO.& SIZE REQUIRED BY UNIT MANUFACTURE

CONDENSING UNIT SCHEDULE

LOCATION	SYMBOL	MANUFACTURER & MODEL NO.	COOLING CAPACITY TOTAL (BTUH)	COOLING CAPACITY SENSIBLE (BTUH)	SEER / EER	ELECTRICAL VOLTAGE	ELECTRICAL PHASE	ELECTRICAL FLA	ELECTRICAL MCA	ELECTRICAL MOCP	WT. LBS	REMARKS
BUILDING "A & B"	CU AB1, CU AB2, CU AB4, CU AB6, CU AB7, CU AB8, CU AB9	"CARRIER" 38HDC048	52,000	36,000	12	460	3	9.0	11.1	15	280	SEE NOTE 1 2 BELOW SEE DETAIL 2/M201
BUILDING "A & B"	CU AB3, CU AB5, CU AB10	"CARRIER" 38HDC060	62,000	42,000	12	460	3	8.8	10.8	15	300	SEE NOTE 1 2 BELOW SEE DETAIL 2/M201
BUILDING "C & D"	CU CD1, CU CD2, CU CD4, CU CD5, CU CD6	"CARRIER" 38HDC048	52,000	36,000	12	460	3	9.0	11.1	15	280	SEE NOTE 1 2 BELOW SEE DETAIL 2/M201
BUILDING "C & D"	CU CD3	"CARRIER" 38HDC060	62,000	42,000	12	460	3	8.8	10.8	15	300	MATCHING FAN COIL FOR CU/CD11 IS FC/CD1 SEE NOTE 1 2 BELOW SEE DETAIL 2/M201
BUILDING "C & D"	CU CD7	"CARRIER" 38HDC036	37,000	26,000	12	460	3	6.1	7.5	15	200	SEE NOTE 1 3 BELOW SEE DETAIL 2/M201
BUILDING "E & F"	CU EF1, CU EF2, CU EF5, CU EF6, CU EF7, CU EF8, CU EF9	"CARRIER" 38HDC048	52,000	36,000	12	460	3	9.0	11.1	15	280	SEE NOTE 1 2 BELOW SEE DETAIL 2/M201
BUILDING "E & F"	CU EF3, CU EF4	"CARRIER" 38HDC060	62,000	42,000	12	460	3	8.8	10.8	15	300	SEE NOTE 1 2 BELOW SEE DETAIL 2/M201
BUILDING "G & H"	CU GH1, CU GH2, CU GH3, CU GH5, CU GH6, CU GH7, CU GH10	"CARRIER" 38HDC048	52,000	36,000	12	460	3	9.0	11.1	15	280	SEE NOTE 1 2 BELOW SEE DETAIL 2/M201
BUILDING "G & H"	CU GH4, CU GH8, CU GH9	"CARRIER" 38HDC060	62,000	42,000	12	460	3	8.8	10.8	15	300	SEE NOTE 1 2 BELOW SEE DETAIL 2/M201
BUILDING "G & H"	CU GH11	"CARRIER" 38HDC036	37,000	26,000	12	460	3	6.1	7.5	15	200	SEE NOTE 1 3 BELOW SEE DETAIL 2/M201
BUILDING "I & J"	CU IJ1, CU IJ3, CU IJ4, CU IJ5, CU IJ6	"CARRIER" 38HDC048	52,000	36,000	12	460	3	9.0	11.1	15	280	SEE NOTE 1 2 BELOW SEE DETAIL 2/M201
BUILDING "I & J"	CU IJ2	"CARRIER" 38HDC060	62,000	42,000	12	460	3	8.8	10.8	15	300	SEE NOTE 1 2 BELOW SEE DETAIL 2/M201
BUILDING "K"	CU K1	SEASON-4 6BJF08-0284	340,104	309,397	11.3	460	3	59.8	63	70	2,800	SEE SPECIFICATIONS REFRIGERANT PIPING SHALL BE SIZED PER MANUFACTURER'S RECOMMENDATIONS ADDITIVE ALTERNATE ITEM
BUILDING "L"	CU L1, CU L2, CU L3, CU L4, CU L5, CU L6	"CARRIER" 38HDC060	62,000	42,000	12	460	3	8.8	10.8	15	300	SEE NOTE 1 2 BELOW SEE DETAIL 2/M201
BUILDING "L"	CU L7	"CARRIER" 38HDC036	37,000	26,000	12	460	3	6.1	7.5	15	200	SEE NOTE 1 3 BELOW SEE DETAIL 2/M201
BUILDING "M"	CU M1, CU M2, CU M3, CU M4, CU M5, CU M6	"CARRIER" 38HDC060	62,000	42,000	12	460	3	8.8	10.8	15	300	SEE NOTE 1 2 BELOW SEE DETAIL 2/M201
BUILDING "O"	CU O1	"CARRIER" 38HDC060	62,000	42,000		460	3	8.8	10.8	15	300	SEE NOTE 1 2 BELOW SEE DETAIL 2/M201
BUILDING "T"	CU T1, CU T2	"CARRIER" 38HDC048	52,000	36,000	12	460	3	9.0	11.1	15	280	SEE NOTE 1 2 BELOW SEE DETAIL 2/M201
BUILDING "T"	CU T3	"CARRIER" 38ARS012	118,000	90,600	10.4	460	3	20.6	23.9	35.0	600	SEE NOTE 1 4 6 BELOW MATCHING WITH AH/T2

NOTES : 1 UNIT TO COMPLETE FACTORY ASSEMBLED, TESTED, & READY FOR INSTALLATION WITH ALL CONTROLS INSTALLED FOR DX COOLING OPERATION

2 PROVIDE 3/8" LIQ. & 1 1/8" SUCTION REFRIGERANT PIPING LINES WITH ALL DEVICES REQUIRED FOR SPLIT-SYSTEM COOLING APPLICATION

3 PROVIDE 3/8" LIQ. & 7/8" SUCTION REFRIGERANT PIPING LINES WITH ALL DEVICES REQUIRED FOR SPLIT-SYSTEM COOLING APPLICATION

4 PROVIDE 1/2" LIQ. & 1 3/8" SUCTION REFRIGERANT PIPING LINES WITH ALL DEVICES REQUIRED FOR SPLIT-SYSTEM COOLING APPLICATION

5 PROVIDE 5/8" LIQ. & 1 3/8" SUCTION REFRIGERANT PIPING LINES (FOR EACH REFRIGERANT CIRCUIT) WITH ALL DEVICES REQUIRED FOR SPLIT-SYSTEM COOLING APPLICATION

6 PROVIDE TWO STEP UNLOADING: 67% AND 33%

REVISED MAY 12 2004

IDENTIFICATION STAMP
DIV. OF THE STATE ARCHITECT
OFFICE OF REGULATION SERVICES
FILE NO. 19-H51
APPL. NO. 03-106434
AC.____ FLS. 14/7 SS.____
DATE____

Dougherty ■ Dougherty
Architecture • Planning • Interior Design
3194-D Airport Loop Drive
Costa Mesa, CA 92626
(714) 427-0277

Copyright © 2002 Dougherty + Dougherty

FTA Architecture
831 S. Hector Blvd.
Anaheim, CA 92805
Phone: (714) 772-8789
Fax: (714) 772-8789
Job Number: 22084

Architect Seal

Consultant Seal

LA MIRADA HIGH SCHOOL
MODERNIZATION
NORWALK - LA MIRADA UNIFIED SCHOOL DISTRICT
13520 ADELFA DRIVE LA MIRADA, CA 90638

MECHANICAL
SCHEDULES
LEGEND & NOTES

Date:	04-01-04
Job:	20237.50
Scale:	NONE
Drawn:	
Revisions:	
1	12-01-03

M001

HEAT-VENT UNIT SCHEDULE

LOCATION	SYMBOL	MFR & MODEL	C.F.M.	E.S.P.	FAN RPM	DRIVE	MOTOR HP	MOTOR RPM	MOTOR VOLT	MOTOR PH	MOTOR HZ	INPUT MBH	OUTPUT MBH	EFF.	CONTROL FLA	CONTROL V	CONTROL PH	CONTROL HZ	FILTERS & RACK OPTION	MIN. O.S.A.	OPER. WT. (LBS)	REMARKS
BUILDING R	HV R1, HV R2, HV R4	REZNOR HXE-150 (INDOOR)	3000	0.8"	1010	BELT	2	1750	460	3	60	150	120	80%	0.33	120	1	60	SIZE & NO. PER MFG.	3000	335	PROVIDE UNIT WITH RIGHT SIDE CONTROL OPTION, THERMOSTAT SUMMER/OFF/WINTER SWITCH SEE DETAIL 8/M202 (1)
BUILDING R	HV R3	REZNOR HXE-150 (INDOOR)	3000	0.8"	1010	BELT	2	1750	460	3	60	150	120	80%	0.33	120	1	60	SIZE & NO. PER MFG.	3000	335	PROVIDE THERMOSTAT WITH SUMMER/OFF/WINTER SWITCH SEE DETAIL 8/M202 (1)

(1) PROVIDE DUCT SMOKE DETECTOR IN SUPPLY AIR DUCT TO COMPLY WITH 1998 C.M.C. SECTION 608, DUCT SMOKE DETECTOR TO BE PROVIDED AND WIRED UNDER SECTION 16 OF SPECIFICATIONS AND INSTALLED UNDER SECTION 15 OF SPECIFICATIONS.

SINGLE-PACKAGE AIR CONDITIONING UNIT SCHEDULE

LOCATION	SYMBOL	MANUFACTURER & MODEL NO.	SUPPLY FAN C.F.M.	SUPPLY FAN EXT. S.P.	SUPPLY FAN RPM	COOLING CAPACITY (BTUH) 80/67, 95 AMB.	EER	SEER	HEATING CAPACITY (BTUH)	AFUE (%)	ELECTRICAL VOLTAGE	PHASE	FAN HP	WATT	F.L.A.	MCA	MOCP	MIN. OSA CFM	OPER. WT. (LBS)	REMARKS
ON ROOF BUILDING "N"	AC N1	"CARRIER" 48HJD014 (vertical disch.)	5000	1.2"	1166	149,800 TOT. 114,200 SEN.	9.5	–	224,000 INPUT 183,700 OUTPUT	82	460	3ø	–		30.4	32.4	35.0	450	1600	SEE NOTE (1) (2) (3) (4) BELOW SEE DETAIL 1/M201
ON ROOF BUILDING "N"	AC N2 & AC N4	"CARRIER" 48GX024 (vertical disch.)	600	0.7"	HIGH	24,000 TOT. 17,400 SEN.	–	12.0	40,000 INPUT 31,000 OUTPUT	80	208–230	1ø	–		13.1	15.7	25.0	150	400	SEE NOTE (1) (2) (5) BELOW SEE DETAIL 1/M201
ON ROOF BUILDING "N"	AC N3	"CARRIER" 48HJD009 (vertical disch.)	3400	1.0"	917	102,600 TOT. 73,000 SEN.	10.8	–	125,000 INPUT 102,500 OUTPUT	82	460	3ø	–		24.5	26.3	30.0	525	1200	SEE NOTE (1) (2) (3) (4) BELOW SEE DETAIL 1/M201
ON ROOF BUILDING "N"	AC N5	"CARRIER" 48HJD006 (vertical disch.)	2000	1.0"	1397	63,800 TOT. 46,700 SEN.	11.0	13.0	72,000 INPUT 59,040 OUTPUT	82	460	3ø	–		15.7	17.7	20.0	450	1000	SEE NOTE (1) (2) (3) BELOW SEE DETAIL 1/M201
ON GRADE BUILDING "R"	AC R1	"CARRIER" 48HJD009 (horizontal disch.)	3400	1.0"	907	102,600 TOT. 73,000 SEN.	10.8	–	125,000 INPUT 102,500 OUTPUT	82	460	3ø	–		24.5	26.3	30.0	525	1200	SEE NOTE (1) (3) (4) BELOW SEE DETAIL 6/M202
ON GRADE BUILDING "R"	AC R2	"CARRIER" 48HJD007 (horizontal disch.)	2400	1.0"	1440	78,900 TOT. 59,200 SEN.	11.0	–	72,000 INPUT 59,000 OUTPUT	82	460	3ø	–		16.1	18.2	25	450	1000	SEE NOTE (1) (3) (4) BELOW SEE DETAIL 6/M202
ON ROOF BUILDING "C–D"	AC CD1 THRU. AC CD4	"CARRIER" 48HJD009 (vertical disch.)	3400	1.0"	917	102,600 TOT. 73,000 SEN.	10.8	–	125,000 INPUT 102,500 OUTPUT	82	460	3ø	–		24.5	26.3	30.0	525	1200	SEE NOTE (1) (2) (3) (4) BELOW SEE DETAIL 6/M202

NOTES :

(1) UNIT TO BE COMPLETE FACTORY ASSEMBLED,TESTED, & READY FOR INSTALLATION WITH ALL CONTROLS INSTALLED FOR DX COOLING & NATURAL GAS HEATING OPERATION

(2) PROVIDE UNIT WITH FACTORY ROOF MOUNTING CURB

(3) PROVIDE INTEGRATED ECONOMIZER WITH CENTRIFUGAL POWER EXHAUST CONTROLLED BY PRESSURE SENSOR IN THE SPACE

(4) PROVIDE DUCT SMOKE DETECTOR IN SUPPLY AIR DUCT, DUCT SMOKE DETECTOR TO BE PROVIDED AND WIRED UNDER SECTION 16 OF SPECIFICATIONS AND INSTALLED UNDER SECTION 15 OF SPECIFICATIONS.

(5) PROVIDE FACTORY OSA HOOD WITH MANUAL VOLUME DAMPER

FAN COIL SCHEDULE (INDOOR UNIT)

LOCATION	SYMBOL	MANUFACTURER & MODEL NO.	SUPPLY FAN C.F.M.	SUPPLY FAN EXT. S.P.	SUPPLY FAN RPM	COOL. CAP. (MBH) TOTAL	COOL. CAP. (MBH) SENSIBLE	HEAT CAP. (MBH)	ELECTRICAL–208/230–1ø AUX. ELEC. HEATER (KW)	AUX. ELEC. HEATER FLA	AUX. ELEC. HEATER MCA	AUX. ELEC. HEATER MOCP	FAN FLA	FAN MCA	FAN MOCP	OPER. WT. (LBS)	FILTER	REMARKS
SEE PLAN	FC AB1	CARRIER SYS: 53QKE030 40QKE036 (HEAT PUMP)	915	0.2"	–	29.0	22.0	27.0	2.7	11.25	15.0	15.0	0.78	1.0	15.0	110	PER MFR'S RECOMMENDATION	MATCHING CONDENSING UNIT CU/AB11 (1) (3) SEE DETAIL 3/M202
SEE PLAN	FC AB2	CARRIER SYS: 53QKE024 40QKE036 (HEAT PUMP)	915	0.2"	–	25.0	20.0	23.8	2.7	11.25	15.0	15.0	0.78	1.0	15.0	110	PER MFR'S RECOMMENDATION	MATCHING CONDENSING UNIT CU/AB12 (1) (3)
SEE PLAN	FC EF1 & FC EF2	CARRIER SYS: 53QKE036 40QKE048 (HEAT PUMP)	1100	0.2"	–	34.0	25.4	34.0	2.7	11.25	15.0	15.0	1.04	1.3	15.0	125	PER MFR'S RECOMMENDATION	MATCHING CONDENSING UNITS: CU/EF10 & CU/EF11 RESPECTIVELY (1) (3) SEE DETAIL 3/M202
SEE PLAN	FC EF3	CARRIER SYS: 53QKE024 40QKE036 (HEAT PUMP)	915	0.2"	–	25.0	20.0	23.8	2.7	11.25	15.0	15.0	0.78	1.0	15.0	110	PER MFR'S RECOMMENDATION	MATCHING CONDENSING UNIT CU/EF12 (1) (3) SEE DETAIL 3/M202
SEE PLAN	FC GH1	CARRIER SYS: 53QKE036 40QKE048 (HEAT PUMP)	1100	0.2"	–	34.0	25.4	34.0	2.7	11.25	15.0	15.0	1.04	1.3	15.0	125	PER MFR'S RECOMMENDATION	MATCHING CONDENSING UNIT CU/GH12 (1) (3) SEE DETAIL 3/M202
SEE PLAN	FC GH2	CARRIER SYS: 53QKE024 40QKE036 (HEAT PUMP)	915	0.2"	–	25.0	20.0	23.8	2.7	11.25	15.0	15.0	0.78	1.0	15.0	110	PER MFR'S RECOMMENDATION	MATCHING CONDENSING UNIT CU/GH13 (1) (3) SEE DETAIL 3/M202
SEE PLAN	FC R1	CARRIER SYS: 53QAE024 40QAE024 (HEAT PUMP)	550	0.2"	–	24.0	16.4	22.6	2.0	8.66	–	–	0.5	11.29	15.0	110	PER MFR'S RECOMMENDATION	MATCHING CONDENSING UNIT CU/R1 (2) SEE DETAIL 7/M201

(1) PROVIDE TWO SEPARATE ELECTRICAL CIRCUITS, ONE FOR FAN COIL AND ONE FOR ELECTRIC HEATER

(2) MCA AND MOCP ARE TOTAL FOR ELECTRIC HEATER AND FAN COIL UNIT

(3) PROVIDE POWER VENTILATION KIT

CONDENSING UNIT (HEAT PUMP) SCHEDULE

LOCATION SERVED	SYMBOL	MANUFACTURER & MODEL NO.	COOLING CAPACITY (MBH) TOTAL	COOLING CAPACITY (MBH) SENSIBLE	HEATING CAPACITY (MBH)	HSPF/COP	SEER	ELECTRICAL V–PH	FLA	MCA	MOCP	WT. LBS	REMARKS
SEE PLAN	CU AB1	CARRIER SYS: 53QKE030 38QRC030	29.0	22.0	27.0	7.6/ 3.27	11.5	208–1	14.2	17.6	30.0	200	SEE DETAIL 2/M201 PROVIDE 3/8"ø LIQUID LINE AND 3/4"ø SUCTION LINE
SEE PLAN	CU AB12	CARRIER SYS: 53QKE024 38QRC024	25.0	20.0	23.0	7.6/ 3.34	10.7	208–1	12.4	15.3	25.0	180	SEE DETAIL 2/M201 PROVIDE 3/8"ø LIQUID LINE AND 3/4"ø SUCTION LINE
SEE PLAN	CU EF10 & CU EF11	CARRIER SYS: 53QKE036 38QRC036	34.0	25.4	34.0	6.8/ 3.0	10.0	208–3	12.7	15.5	25.0	200	SEE DETAIL 2/M201 PROVIDE 3/8"ø LIQUID LINE AND 3/4"ø SUCTION LINE
SEE PLAN	CU EF12	CARRIER SYS: 53QKE024 38QRC024	25.0	20.0	23.0	7.6/ 3.34	10.7	208–1	12.4	15.3	25.0	180	SEE DETAIL 2/M201 PROVIDE 3/8"ø LIQUID LINE AND 3/4"ø SUCTION LINE
SEE PLAN	CU GH12	CARRIER SYS: 53QKE036 38QRC036	34.0	25.4	34.0	6.8/ 3.0	10.0	208–3	12.7	15.5	25.0	200	SEE DETAIL 2/M201 PROVIDE 3/8"ø LIQUID LINE AND 3/4"ø SUCTION LINE
SEE PLAN	CU GH13	CARRIER SYS: 53QKE024 38QRC024	25.0	20.0	23.0	7.6/ 3.34	10.7	208–1	12.4	15.3	25.0	180	SEE DETAIL 2/M201 PROVIDE 3/8"ø LIQUID LINE AND 3/4"ø SUCTION LINE
SEE PLAN	CU R1	CARRIER SYS: 53QAE024 38QRC024	24.0	16.4	22.6	7.3/ 3.0	11.0	208–1	12.4	15.3	25.0	180	SEE DETAIL 2/M201 PROVIDE 3/8"ø LIQUID LINE AND 3/4"ø SUCTION LINE

AIR HANDLING UNIT SCHEDULE

LOCATION	SYMBOL	MFR & MODEL	C.F.M.	E.S.P.	FAN RPM	DRIVE	MOTOR HP	MOTOR RPM	MOTOR VOLT	MOTOR PH	MOTOR HZ	HEATING CAPACITY INPUT (MBH)	HEATING CAPACITY OUTPUT (MBH)	EFF.	COOLING COIL SYMBOL	COOLING COIL MFR & MODEL	COOLING COIL COIL DESIGN	CAPACITY (MBH) @ 80 DB/67 WB TOT (MBH)	CAPACITY (MBH) @ 80 DB/67 WB SEN (MBH)	CONTROL FLA	CONTROL V	CONTROL PH	CONTROL HZ	FILTERS & RACK OPTION	MIN. O.S.A.	OPER. WT. (LBS)	REMARKS
BUILDING T	AH T1	REZNOR SSCBL–400 (INDOOR)	8200	1.6"	1210	BELT	10	1750	460	3	60	400	320	80%	C T1	REZNOR LX COIL WITH AU3 CABINET	2 CIRCUITS 6 ROW, 10 FPI	298	209	4.77	120	1	60	SIZE & NO. PER MFG.	2200	1300	SEE SPECIFICATIONS SEE DETAIL 5/M202 (1)
BUILDING T	AH T2	WESTAIRE WAH–20S (INDOOR)	3400	1.0"	2633	BELT	3	1750	460	3	60	125	100	80%	–	BUILT–IN	BUILT–IN	137.4	94.28	2.85	120	1	60	(2) 24"x24"x2"	600	1300	PROVIDE ALL ACCESSES, CONTROLS AND FLUE ON RIGHT SIDE FACING THE AIR STREAM SEE DETAIL 5/M202 (1)

(1) PROVIDE SMOKE DETECTOR IN SUPPLY AIR DUCT TO COMPLY WITH 1998 C.M.C. SECTION 608, SMOKE DUCT DETECTOR TO BE PROVIDED AND WIRED UNDER SECTION 16 OF SPECIFICATIONS AND INSTALLED UNDER SECTION 15 OF SPECIFICATIONS.

MULTI-ZONE AIR HANDLING UNIT

1

SYM.	DESCRIPTION	SERVICE	COOLING CAPACITY AT 95° F. AMB. TOT. BTUH	COOLING CAPACITY AT 95° F. AMB. SENS. BTUH	HEATING CAPACITY BUTH INPUT	HEATING CAPACITY BUTH OUTPUT	HEATING CAPACITY BUTH EFF	COOLING SUPPLY AIR EAT (° F) DB	EAT (° F) WB	LAT (° F) DB	LAT (° F) WB	SUPPLY FAN CFM	SUPPLY FAN ESP	SUPPLY FAN BHP	SUPPLY FAN RPM	MOTOR (HP)	ELECTRICAL VOLTAGE	ELECTRICAL F.L.A.	ELECTRICAL MCA	ELECTRICAL MOCP	FILTERS	OPER. WT. (LBS)	REMARKS
MZ K1	SEASON 4 6MNZ11–028A–DN4.0–11SE	BLDG. K ADMIN. OFFICES	340,104	309,397	400,000	320,000	80 AFUE	78.0	62.1	51.8	51.0	10,870	2.0"	10.3	1402	15	460V/3ø/60HZ	22.1	27.0	40.0	PER MFG.	4250	SEE SPECIFICATIONS SEE (6/M202) FOR ALLOWANCE

REVISED MAY 12 2004

IDENTIFICATION STAMP
DIV. OF THE STATE ARCHITECT
OFFICE OF REGULATION SERVICES
FILE NO. 19–H51
APPL. NO. 03–106434
AC ____ FLS NL SS
DATE ____

Dougherty + Dougherty
Architecture • Planning • Interior Design
3194-D Airport Loop Drive
Costa Mesa, CA 92626
(714) 437-0277

Copyright © 2002 Dougherty + Dougherty

FTA
Facilities Technology
831 S. Harbor Blvd.
Anaheim, CA 92805
Phone: (714) 772-9983
Fax: (714) 772-9788
Arch. Number: 22004

Architect Seal

Consultant Seal

LA MIRADA HIGH SCHOOL
MODERNIZATION
NORWALK - LA MIRADA UNIFIED SCHOOL DISTRICT
13520 ADELFA DRIVE LA MIRADA, CA 90638

MECHANICAL SCHEDULES

Date:	04-01-04
Job:	20237.50
Scale:	NONE
Drawn:	
Revisions:	
1	12-01-03

M002

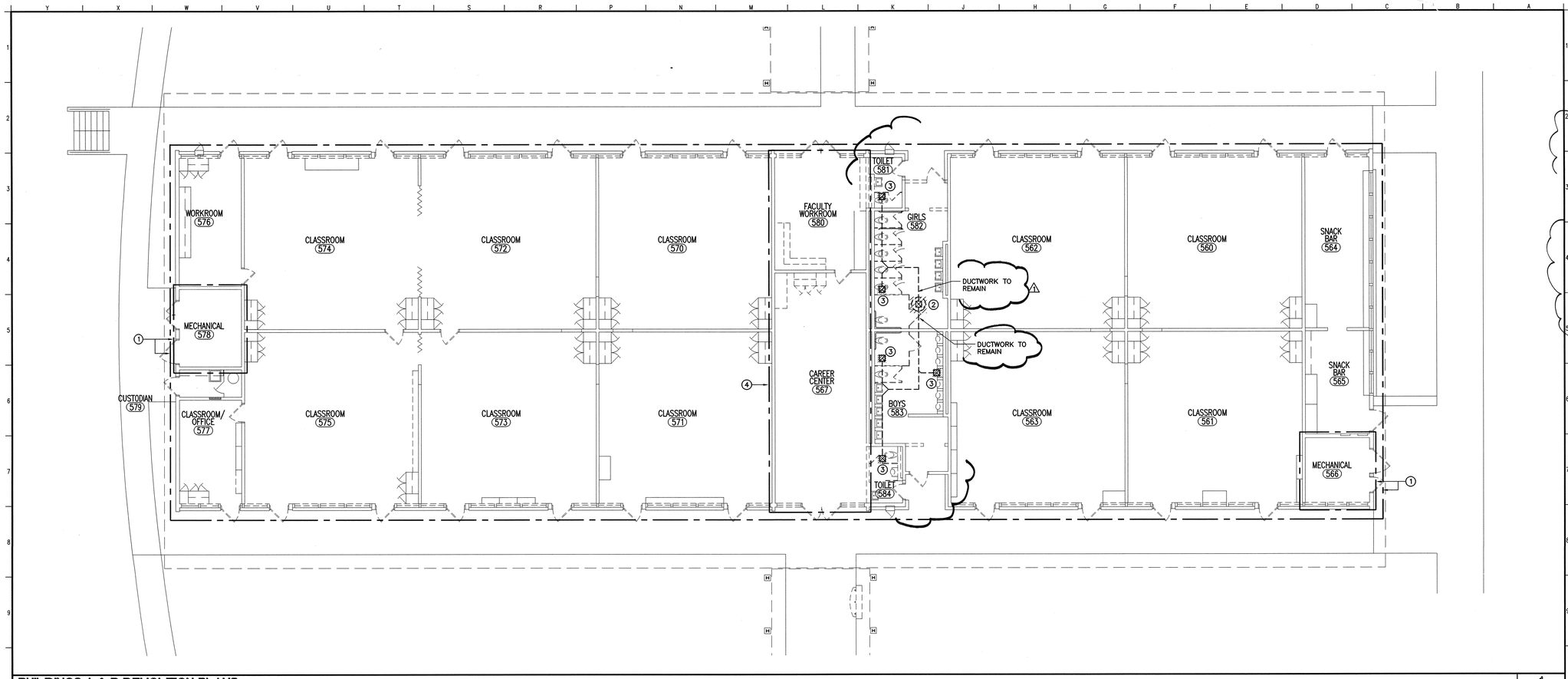

BUILDINGS A & B DEMOLITION PLANS

1
1/8"=1'-0"

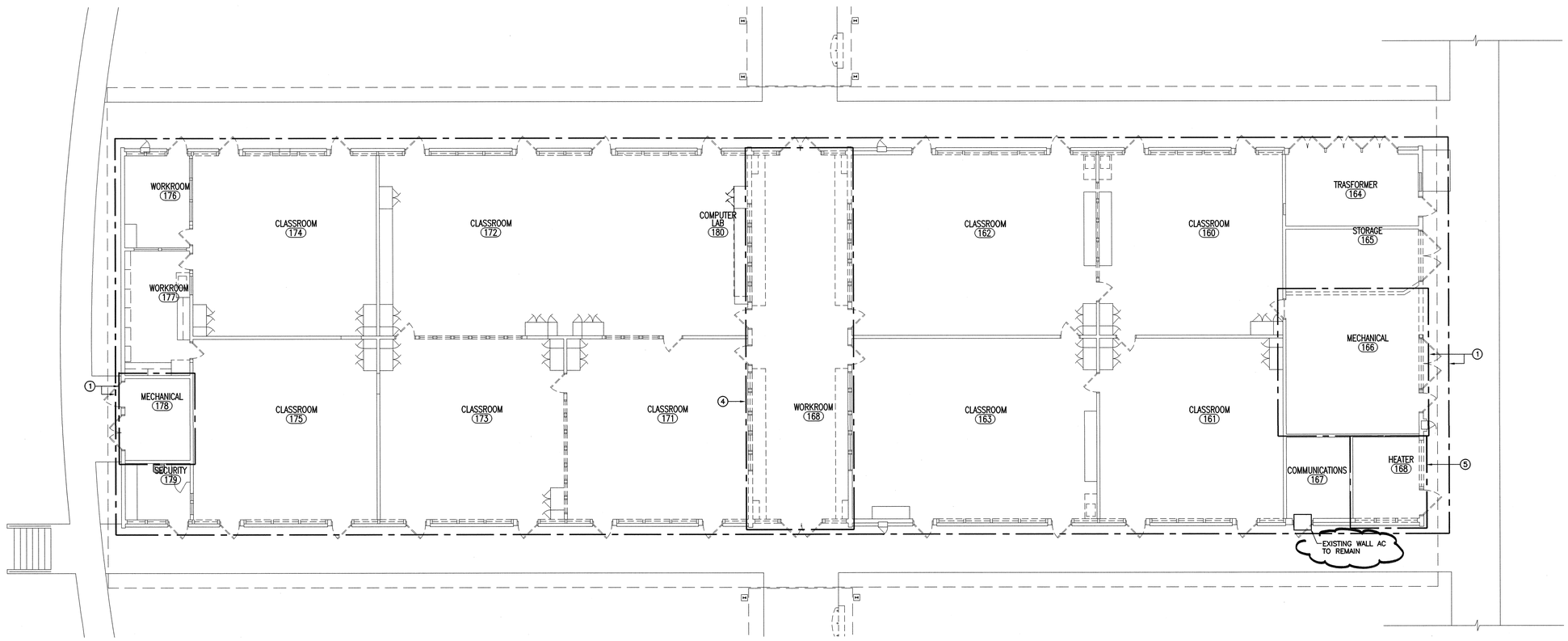

BUILDINGS C & D DEMOLITION PLANS

1
1/8"=1'-0"

DEMOLITION NOTES

1. EXISTING MULTI ZONE UNIT AND ALL RELATED DUCTWORK, HOT WATER PIPING AND ALL ACCESSORIES IN THIS ROOM TO BE REMOVED COMPLETELY. ALL EXISTING DUCTWORK, DIFFUSERS, RETURN & SUPPLY REGISTERS, GRILLES AND ALL CONTROLS IN ALL SPACES OF THE BUILDING SERVED BY THIS SYSTEM TO BE REMOVED COMPLETELY.
2. EXISTING EXHAUST FAN ON ROOF & ROOF CURB TO BE REMOVED.
3. EXISTING GRILLE TO BE REMOVED & REPLACED W/NEW
4. EXISTING ROOFTOP AC UNIT SERVING THIS AREA AND ALL RELATED DUCTWORK, AIR DUSTRIBUTION DEVICES AND CONTROLS TO BE REMOVED.
5. EXISTING BOILER, EXPANSION TANK, PUMPS, FLUE COMBUSTION AIR DUCTS AND ALL RELATED PIPING TO BE REMOVED COMPLETELY. PIPING BEYOND TO BE CAPPED IN WALL AND FLOOR.

1

GENERAL NOTE

BEFORE BIDDING ON THIS WORK, THE CONTRACTORS SHALL MAKE A CAREFUL EXAMINATION OF THE PREMISES, ESPECIALLY ALL THE MECHANICAL AND HEATER ROOMS CONTAINING EXISTING EQUIPMENT TO BE REMOVED, AND SHALL THOROUGHLY FAMILIARIZE THEMSELVES WITH THE REQUIREMENTS OF THE CONTRACT. BY THE ACT OF SUBMITTING A PROPOSAL FOR THE WORK INCLUDED IN THIS CONTRACT, THE CONTRACTOR SHALL BE DEEMED TO HAVE MADE SUCH STUDY AND EXAMINATION, AND THAT HE IS FAMILIAR WITH AND ACCEPTS ALL CONDITIONS OF THE SITE.

KEY PLAN

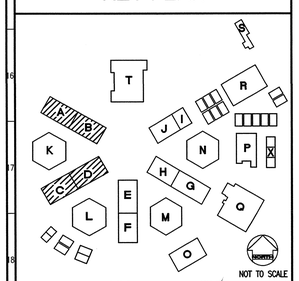

REVISED MAY 12 2004

IDENTIFICATION STAMP
DIV. OF THE STATE ARCHITECT
OFFICE OF REGULATION SERVICES
FILE NO. 19-H51
APPL. NO. 03-106434
AC____ FLS. NJ SS____
DATE____

Dougherty + Dougherty
Architecture · Planning · Interior Design
3194-D Airport Loop Drive
Costa Mesa, CA 92626
(714) 427-0277

Copyright © 2002 Dougherty + Dougherty

FTA
838 S. Hacienda Blvd.
Hacienda Heights, CA 91745
Phone: (714) 772-9293
Fax: (714) 772-9294
Job Number: 22084

Architect Seal

Consultant Seal

LA MIRADA HIGH SCHOOL MODERNIZATION

NORWALK - LA MIRADA UNIFIED SCHOOL DISTRICT
13520 ADELFA DRIVE LA MIRADA, CA 90638

CLSRMS A, B, C & D
MECHANICAL
DEMOLITION PLANS

Date:	04-01-04
Job:	20237.50
Scale:	1/8" = 1'
Drawn:	
Revisions:	
1	12-01-03

MD101

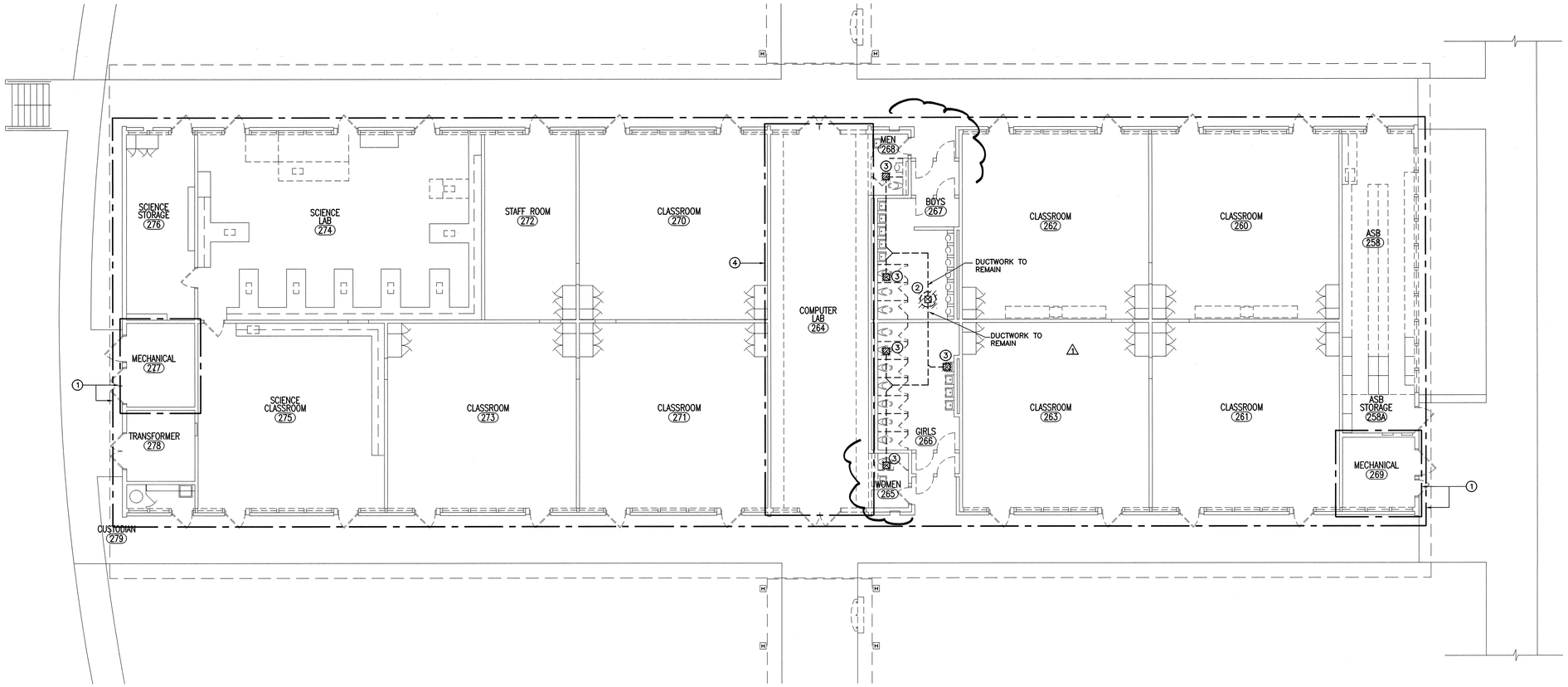

BUILDINGS E & F DEMOLITION PLANS

1
1/8"=1'-0"

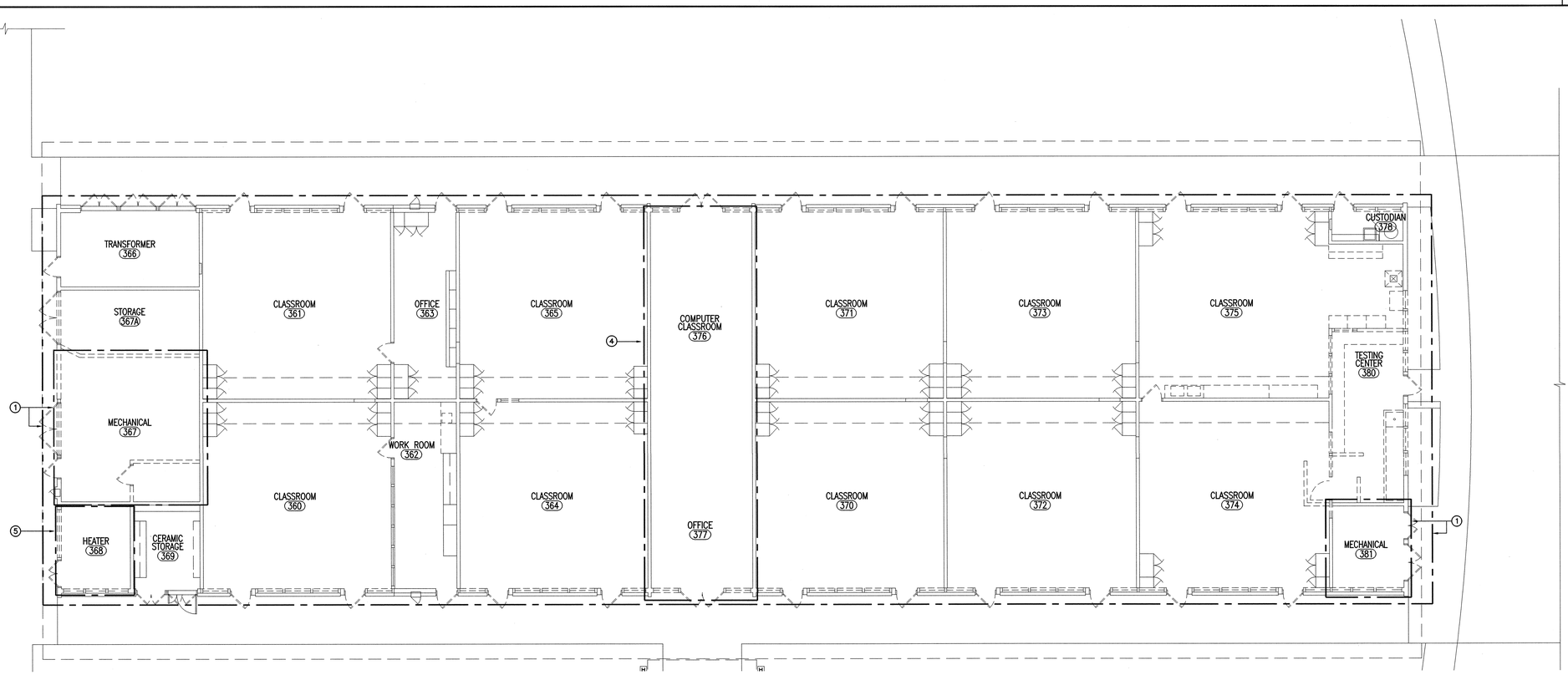

BUILDINGS G & H DEMOLITION PLANS

1
1/8"=1'-0"

DEMOLITION NOTES

1. EXISTING MULTI ZONE UNIT AND ALL RELATED DUCTWORK, HOT WATER PIPING AND ALL ACCESSORIES IN THIS ROOM TO BE REMOVED COMPLETELY. ALL EXISTING DUCTWORK, DIFFUSERS, RETURN & SUPPLY REGISTERS, GRILLES AND ALL CONTROLS IN ALL SPACES OF THE BUILDING SERVED BY THIS SYSTEM TO BE REMOVED COMPLETELY.
2. EXISTING EXHAUST FAN ON ROOF & ROOF CURB TO BE REMOVED.
3. EXISTING GRILLE TO BE REMOVED & REPLACED W/NEW
4. EXISTING ROOFTOP AC UNIT SERVING THIS AREA AND ALL RELATED DUCTWORK, AIR DUSTRIBUTION DEVICES AND CONTROLS TO BE REMOVED.
5. EXISTING BOILER, EXPANSION TANK, PUMPS, FLUE COMBUSTION AIR DUCTS AND ALL RELATED PIPING TO BE REMOVED COMPLETELY. PIPING BEYOND TO BE CAPPED IN WALL AND FLOOR.

△1

GENERAL NOTE

BEFORE BIDDING ON THIS WORK, THE CONTRACTORS SHALL MAKE A CAREFUL EXAMINATION OF THE PREMISES, ESPECIALLY ALL THE MECHANICAL AND HEATER ROOMS CONTAINING EXISTING EQUIPMENT TO BE REMOVED, AND SHALL THOROUGHLY FAMILIARIZE THEMSELVES WITH THE REQUIREMENTS OF THE CONTRACT. BY THE ACT OF SUBMITTING A PROPOSAL FOR THE WORK INCLUDED IN THIS CONTRACT, THE CONTRACTOR SHALL BE DEEMED TO HAVE MADE SUCH STUDY AND EXAMINATION, AND THAT HE IS FAMILIAR WITH AND ACCEPTS ALL CONDITIONS OF THE SITE.

KEY PLAN

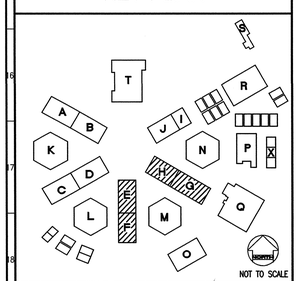

REVISED MAY 12 2004

IDENTIFICATION STAMP
DIV. OF THE STATE ARCHITECT
OFFICE OF REGULATION SERVICES
FILE NO. 19-H51
APPL. NO. 03-106434
AC.____ FLS. NL SS.____
DATE____

Dougherty + Dougherty
Architecture · Planning · Interior Design
3536-D Airport Drive
Santa Ana, CA 92705
(714) 427-0277

Copyright © 2002 Dougherty + Dougherty

FTA
Fire Protection Engineers
831 S. Harbor Blvd
Anaheim, CA 92805
Phone (714) 772-2493
Fax (714) 772-7339
Job Number: 23084

Architect Seal

Consultant Seal

LA MIRADA HIGH SCHOOL
MODERNIZATION
NORWALK - LA MIRADA UNIFIED SCHOOL DISTRICT
13520 ADELFA DRIVE LA MIRADA, CA 90638

CLSRMS E, F, G & H
MECHANICAL
DEMOLITION PLANS

Date:	04-01-04
Job:	20237.50
Scale:	1/8" = 1'
Drawn:	
Revisions:	
△1	12-01-03

MD102

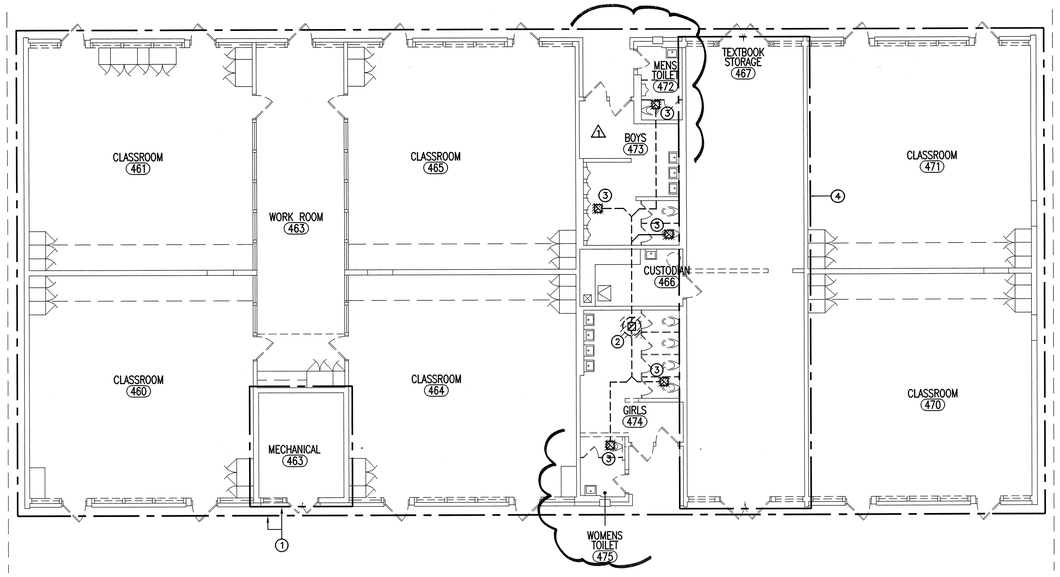

BUILDINGS I, & J DEMOLITION PLANS

1

1/8"=1'-0"

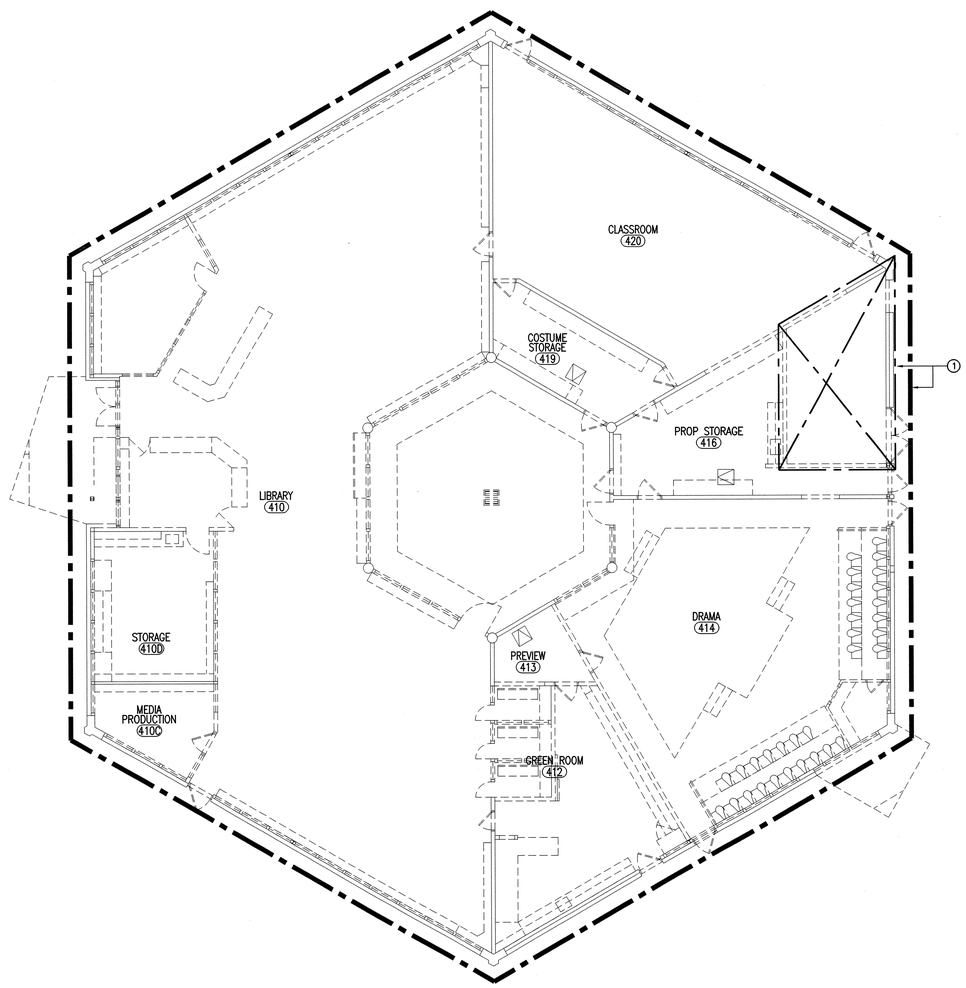

BUILDING N DEMOLITION PLAN

1

1/8"=1'-0"

DEMOLITION NOTES

1. EXISTING MULTI ZONE UNIT AND ALL RELATED DUCTWORK, HOT WATER PIPING AND ALL ACCESSORIES IN THIS ROOM TO BE REMOVED COMPLETELY. ALL EXISTING DUCTWORK, DIFFUSERS, RETURN & SUPPLY REGISTERS, GRILLES AND ALL CONTROLS IN ALL SPACES OF THE BUILDING SERVED BY THIS SYSTEM TO BE REMOVED COMPLETELY
2. EXISTING EXHAUST FAN ON ROOF & ROOF CURB TO BE REMOVED.
3. EXISTING GRILLE TO BE REMOVED & REPLACED W/NEW
4. EXISTING ROOFTOP AC UNIT SERVING THIS AREA AND ALL RELATED DUCTWORK, AIR DUSTRIBUTION DEVICES AND CONTROLS TO BE REMOVED.

⚠

GENERAL NOTE

BEFORE BIDDING ON THIS WORK, THE CONTRACTORS SHALL MAKE A CAREFUL EXAMINATION OF THE PREMISES, ESPECIALLY ALL THE MECHANICAL AND HEATER ROOMS CONTAINING EXISTING EQUIPMENT TO BE REMOVED, AND SHALL THOROUGHLY FAMILIARIZE THEMSELVES WITH THE REQUIREMENTS OF THE CONTRACT. BY THE ACT OF SUBMITTING A PROPOSAL FOR THE WORK INCLUDED IN THIS CONTRACT, THE CONTRACTOR SHALL BE DEEMED TO HAVE MADE SUCH STUDY AND EXAMINATION, AND THAT HE IS FAMILIAR WITH AND ACCEPTS ALL CONDITIONS OF THE SITE.

KEY PLAN

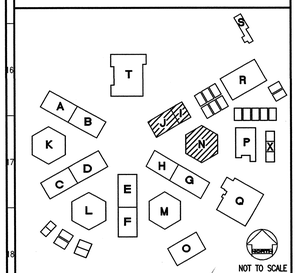

REVISED MAY 12 2004

IDENTIFICATION STAMP
DIV. OF THE STATE ARCHITECT
OFFICE OF REGULATION SERVICES
FILE NO. 19-H51
APPL. NO. 03-106434
AC.____ FLS. NC SS.____
DATE____

Dougherty + Dougherty
Architecture • Planning • Interior Design
3194-D Airport Loop Drive
Costa Mesa, Ca. 92626
(714) 427- 0277

Copyright © 2002 Dougherty + Dougherty

FTA
Facility Technology Associates
609 S. Harbor Blvd.
Anaheim, CA 92805
Phone: (714) 772-9993
Fax: (714) 772-7009
Job Number: 22084

REGISTERED PROFESSIONAL ARCHITECT
ROBERT A. DOUGHERTY
NO. C-9824
EXP. JULY 1, 2005
STATE OF CALIFORNIA
Architect Seal

REGISTERED PROFESSIONAL ENGINEER
MICHAEL A. LOW
No. 12706
EXP. 12/31/04
STATE OF CALIFORNIA
Consultant Seal

LA MIRADA HIGH SCHOOL MODERNIZATION

NORWALK - LA MIRADA UNIFIED SCHOOL DISTRICT
13520 ADELFA DRIVE LA MIRADA, CA 90638

CLSRMS I, J & N
MECHANICAL
DEMOLITION PLANS

Date:	04-01-04
Job:	20237.50
Scale:	1/8" = 1'
Drawn:	
Revisions:	
⚠	12-01-03

MD103

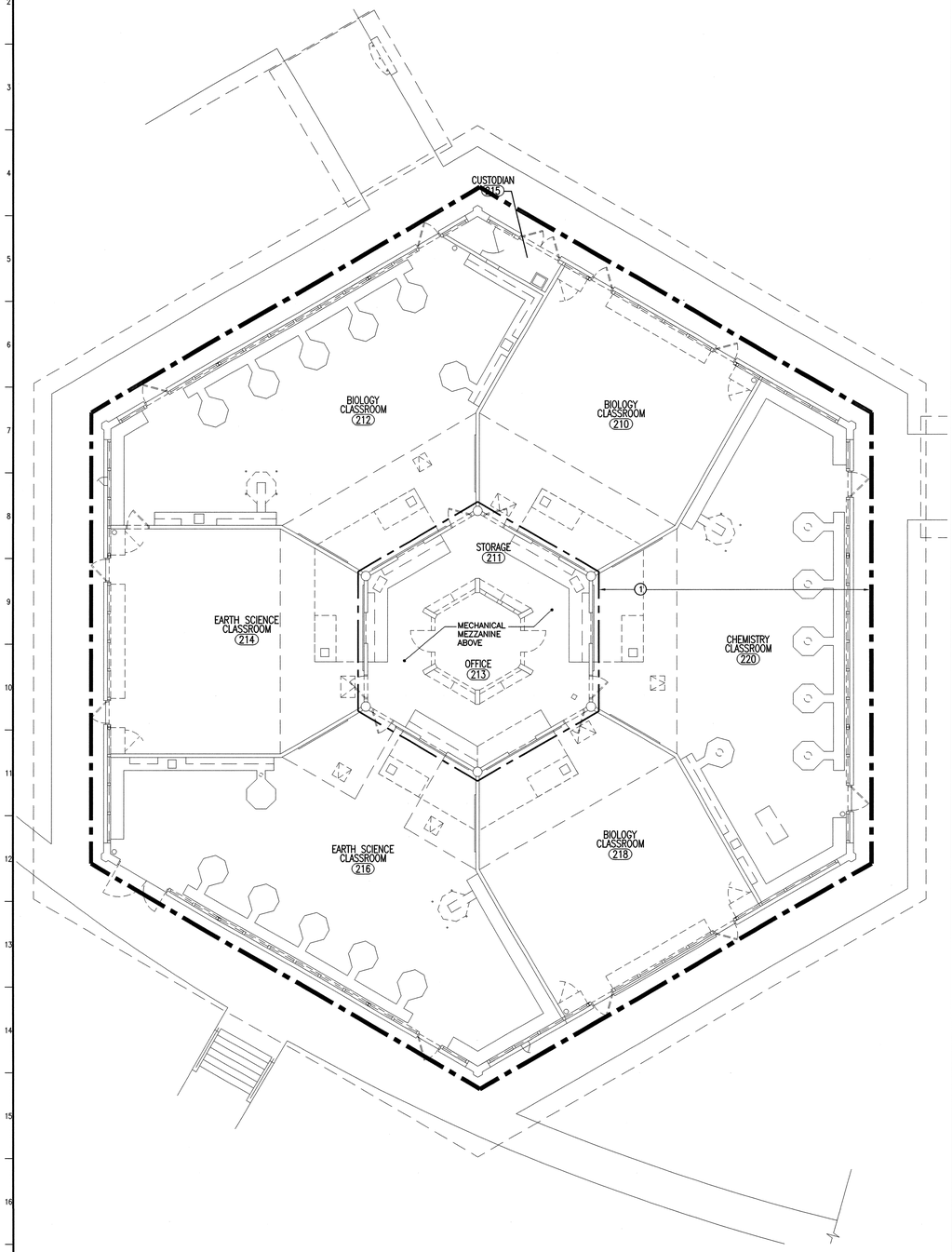

BUILDING L DEMOLITION PLAN | 2 | 1/8"=1'-0"

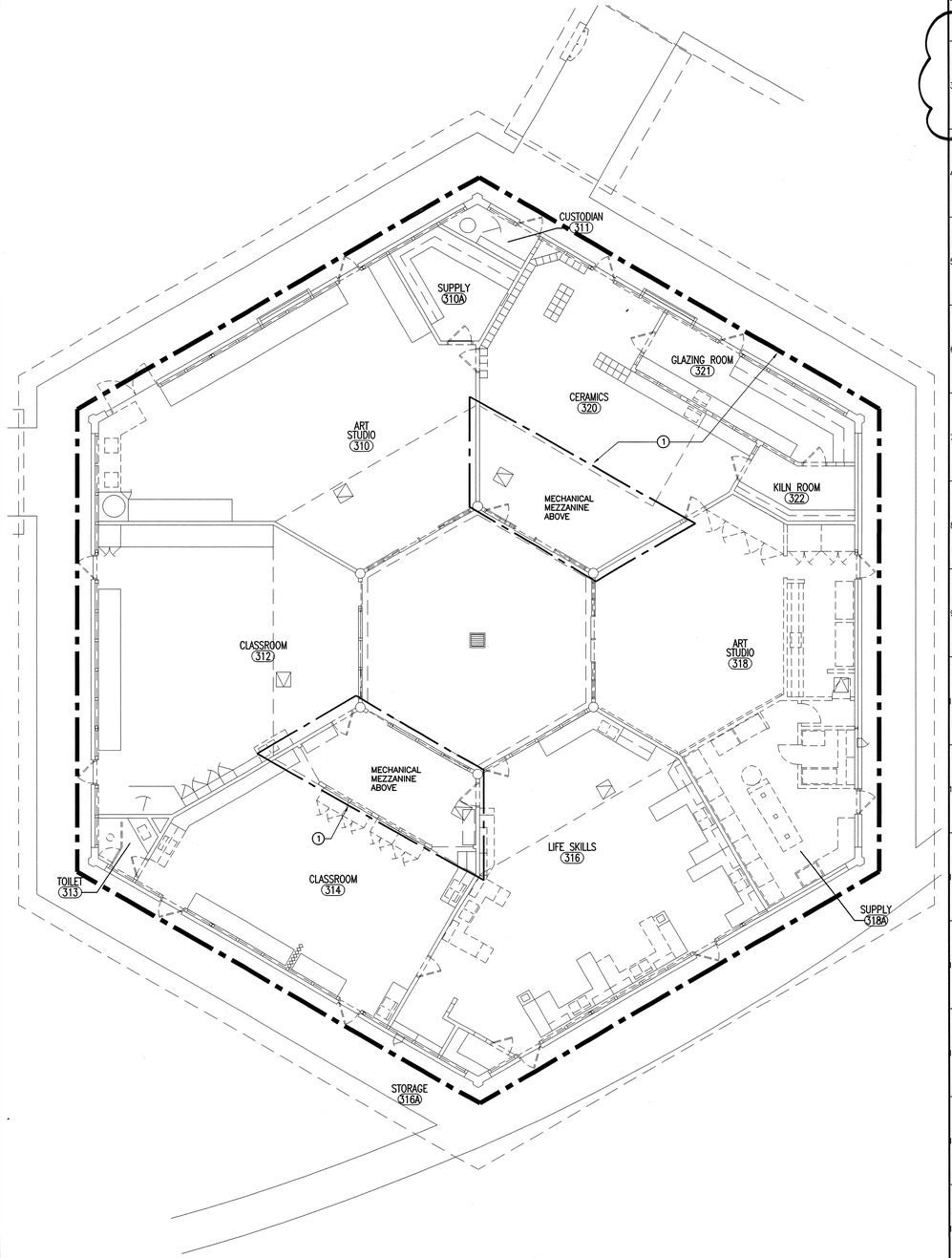

BUILDING M FLOOR PLAN | 1 | 1/8"=1'-0"

DEMOLITION NOTES

1. EXISTING MULTI ZONE UNIT AND ALL RELATED DUCTWORK, HOT WATER PIPING AND ALL ACCESSORIES IN THIS ROOM TO BE REMOVED COMPLETELY. ALL EXISTING DUCTWORK, DIFFUSERS, RETURN & SUPPLY REGISTERS, GRILLES AND ALL CONTROLS IN ALL SPACES OF THE BUILDING SERVED BY THIS SYSTEM TO BE REMOVED COMPLETELY

GENERAL NOTE

BEFORE BIDDING ON THIS WORK, THE CONTRACTORS SHALL MAKE A CAREFUL EXAMINATION OF THE PREMISES, ESPECIALLY ALL THE MECHANICAL AND HEATER ROOMS CONTAINING EXISTING EQUIPMENT TO BE REMOVED, AND SHALL THOROUGHLY FAMILIARIZE THEMSELVES WITH THE REQUIREMENTS OF THE CONTRACT. BY THE ACT OF SUBMITTING A PROPOSAL FOR THE WORK INCLUDED IN THIS CONTRACT, THE CONTRACTOR SHALL BE DEEMED TO HAVE MADE SUCH STUDY AND EXAMINATION, AND THAT HE IS FAMILIAR WITH AND ACCEPTS ALL CONDITIONS OF THE SITE.

KEY PLAN

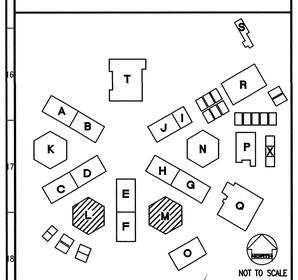

REVISED MAY 1 2 2004

IDENTIFICATION STAMP
DIV. OF THE STATE ARCHITECT
OFFICE OF REGULATION SERVICES
FILE NO. 19-H51
APPL. NO. 03-108434
AC_____ FLS. NLT SS_____
DATE _____

Dougherty + Dougherty
Architecture · Planning · Interior Design
3184-D Airport Loop Drive
Costa Mesa, CA 92626
(714) 427-0277

Copyright © 2002 Dougherty + Dougherty

FTA
Fr. Architects
831 S. Harbor Blvd.
Anaheim, CA 92805
Phone (714) 772-6393
Fax (714) 772-6399
Job Number: 2004

Architect Seal

Consultant Seal

LA MIRADA HIGH SCHOOL MODERNIZATION

NORWALK - LA MIRADA UNIFIED SCHOOL DISTRICT
13520 ADELFA DRIVE LA MIRADA, CA 90638

CLSRMS L & M
MECHANICAL
DEMOLITION PLANS

Date:	04-01-04
Job:	20237.50
Scale:	1/8" = 1'
Drawn:	
Revisions:	

MD104

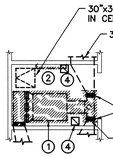

MECHANICAL MEZZANINE ABOVE TOOLS, 763A (A)

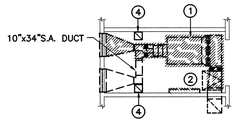

MECHANICAL MEZZANINE ABOVE PROJECT STORAGE, 763E (B)

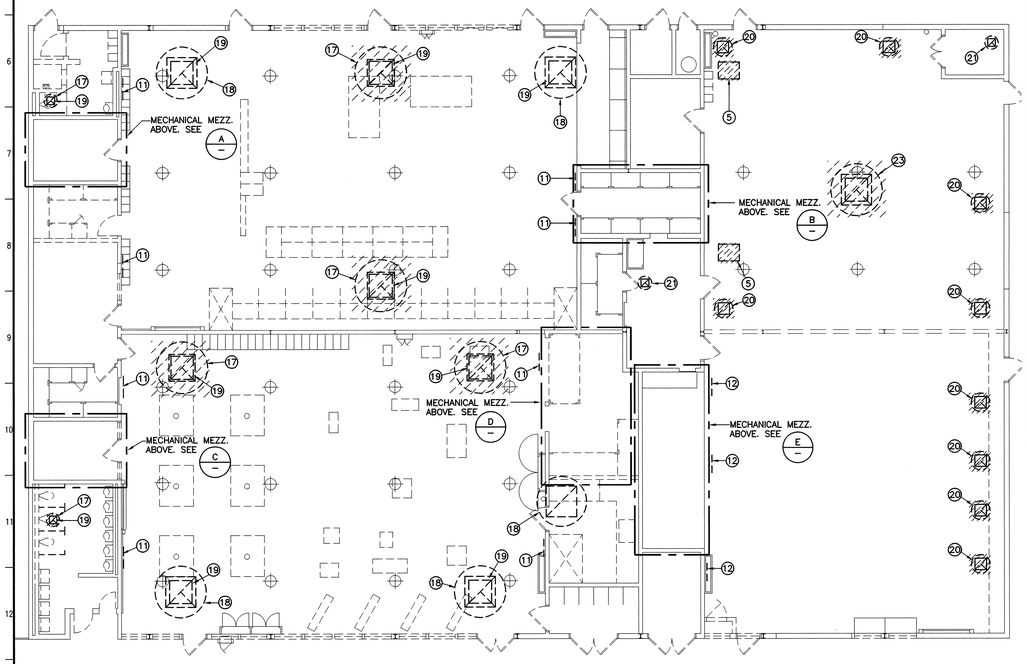

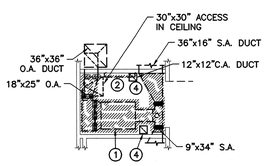

MECHANICAL MEZZANINE ABOVE TOOLS, 760B (C)

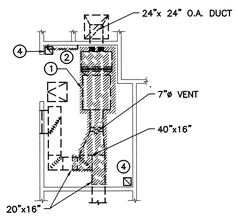

MECHANICAL MEZZANINE ABOVE LOCKERS, 760C (D)

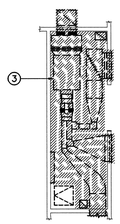

MECHANICAL ABOVE ALCOVE (E)

BUILDING R DEMOLITION PLAN

2

1/8"=1'-0"

PROVIDE DUCTWORK CLEANING FOR ALL EXISTING DUCTWORK TO REMAIN AND TO BE REUSED. SEE SPECIFICATIONS FOR REQUIREMENTS.

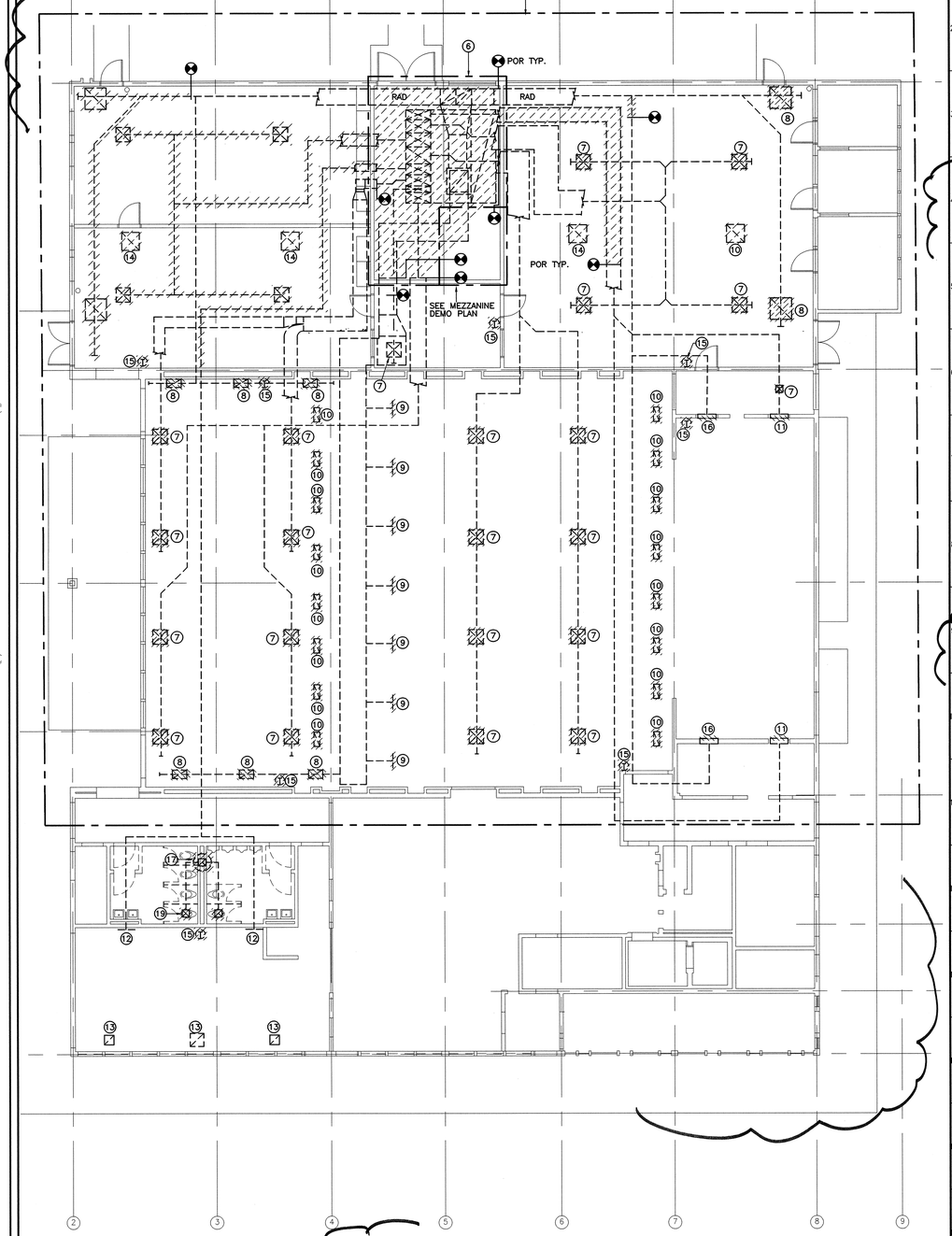

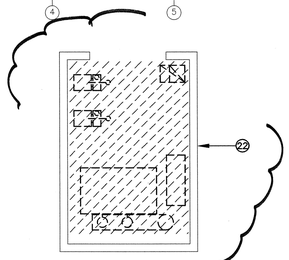

MEZZANINE DEMO PLAN
1/4"=1'

BUILDING T DEMOLITION PLAN

1

1/8"=1'-0"

DEMOLITION NOTES

1. EXISTING DUCT FURNACE, SUPPLY FAN, FLUE THRU. ROOF AND DUCTWORK INDICATED CROSS-HATCHED AND ALL RELATED ACCESSORIES TO BE REMOVED
2. EXISTING FURNACE CONTROL PANEL TO BE REMOVED
3. EXISTING DUCT FURNACE, SUPPLY FAN, FLUE THRU. ROOF AND DUCTWORK AND ALL RELATED ACCESSORIES TO BE REMOVED
4. EXISTING COMBUSTION AIR DUCT TO REMAIN
5. SUSPENDED UNIT HEATER AND FLUE THRU. ROOF TO BE REMOVED
6. EXISTING MULTI ZONE UNIT AND ALL RELATED DUCTWORK, HOT WATER PIPING AND ALL ACCESSORIES IN THIS ROOM TO BE REMOVED COMPLETELY. ALL DUCTWORK SHALL BE REMOVED UP TO WALL OR POR UNLESS INDICATED TO BE REMOVED OUTSIDE OF MECHANICAL ROOM.
7. EXISTING CD TO BE REMOVED AND REPLACED W/NEW
8. EXISTING RAR TO BE REMOVED AND REPLACED W/NEW
9. EXISTING SWR TO BE REMOVED AND REPLACED W/NEW
10. EXISTING RELIEF GRILLE TO BE REMOVED & REPLACED W/NEW
11. EXISTING SWS TO BE REMOVED AND REPLACED W/NEW
12. EXISTING SWS TO BE ABANDONED IN PLACE
13. EXISTING RELIEF GRILLE TO BE ABANDONED IN PLACE
14. EXISTING RELIEF GRILLE & GRAVITY VENTILATOR ON ROOF AND ROOF CURB TO BE REMOVED
15. EXISTING THERMOSTAT TO BE REMOVED
16. EXISTING SWR TO BE ABANDONED IN PLACE
17. EXISTING EXHAUST FAN ON ROOF & ROOF CURB TO BE REMOVED
18. EXISTING ROOF MOUNTED GRAVITY VENTILATOR TO REMAIN
19. EXISTING GRILLE TO BE REMOVED & REPLACED W/NEW
20. EXISTING ROOF MOUNTED GRAVITY VENTILATOR & ROOF CURB TO BE REMOVED. REPAIR ROOF TO MATCH EXISTING
21. EXISTING EXHAUST FAN TO REMAIN
22. EXISTING BOILER, EXPANSION TANK, PUMPS, FLUE COMBUSTION AIR DUCTS AND ALL RELATED PIPING TO BE REMOVED COMPLETELY. PIPING BEYOND TO BE CAPPED IN WALL AND FLOOR.
23. EXISTING ROOF MOUNTED EXHAUST FAN & ROOF CURB TO BE REMOVED. REPAIR ROOF TO MATCH EXISTING

GENERAL NOTE

BEFORE BIDDING ON THIS WORK, THE CONTRACTORS SHALL MAKE A CAREFUL EXAMINATION OF THE PREMISES, ESPECIALLY ALL THE MECHANICAL AND HEATER ROOMS CONTAINING EXISTING EQUIPMENT TO BE REMOVED, AND SHALL THOROUGHLY FAMILIARIZE THEMSELVES WITH THE REQUIREMENTS OF THE CONTRACT. BY THE ACT OF SUBMITTING A PROPOSAL FOR THE WORK INCLUDED IN THIS CONTRACT, THE CONTRACTOR SHALL BE DEEMED TO HAVE MADE SUCH STUDY AND EXAMINATION, AND THAT HE IS FAMILIAR WITH AND ACCEPTS ALL CONDITIONS OF THE SITE.

KEY PLAN

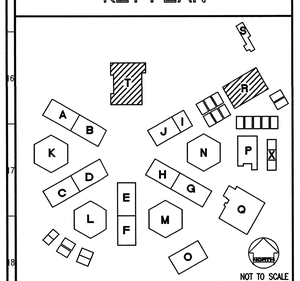

NOT TO SCALE

REVISED MAY 12 2004

IDENTIFICATION STAMP
DIV. OF THE STATE ARCHITECT
OFFICE OF REGULATION SERVICES
FILE NO. 19-H51
APPL. NO. 03-106434
AC.____ FLS. NT SS.____
DATE____

Dougherty ■ Dougherty
Architecture • Planning • Interior Design
7744-D Alondra Blvd.
Paramount, CA 90723
(714) 427-0277

Copyright © 2002 Dougherty + Dougherty

FTA
631 S. Harbor Blvd.
Anaheim, California 92805
Phone: (714) 772-9293
Fax: (714) 772-9370
Job Number: 22084

Architect Seal

Consultant Seal

LA MIRADA HIGH SCHOOL MODERNIZATION

NORWALK - LA MIRADA UNIFIED SCHOOL DISTRICT
13520 ADELFA DRIVE LA MIRADA, CA 90638

CLASSROOMS R & T
MECHANICAL
DEMOLITION PLANS

Date:	04-01-04
Job:	20237.50
Scale:	AS NOTED
Drawn:	
Revisions:	
1	12-01-03

MD105

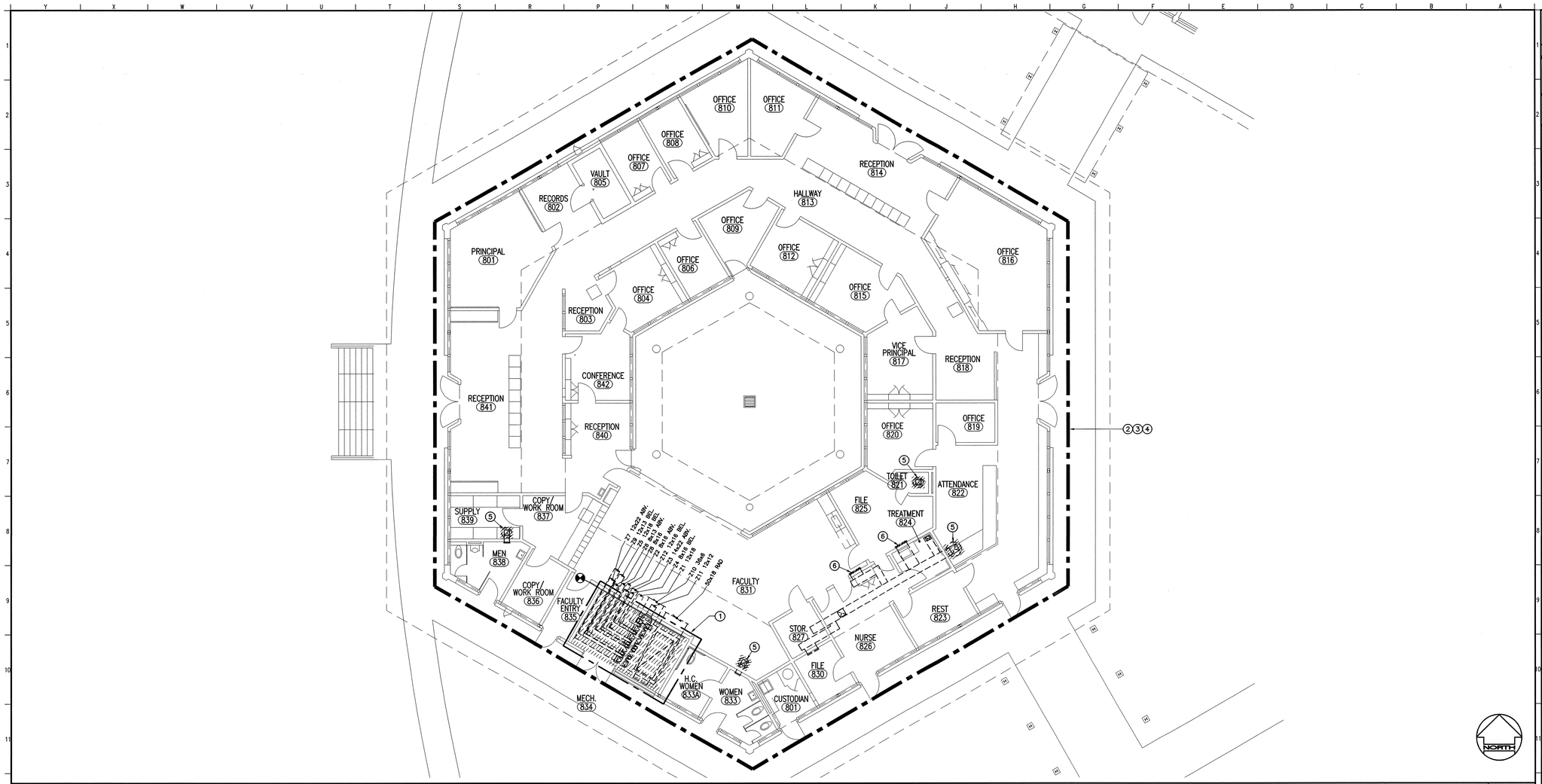

BUILDING K DEMOLITION PLAN

ADMINISTRATION BUILDING

1

1/8"=1'-0"

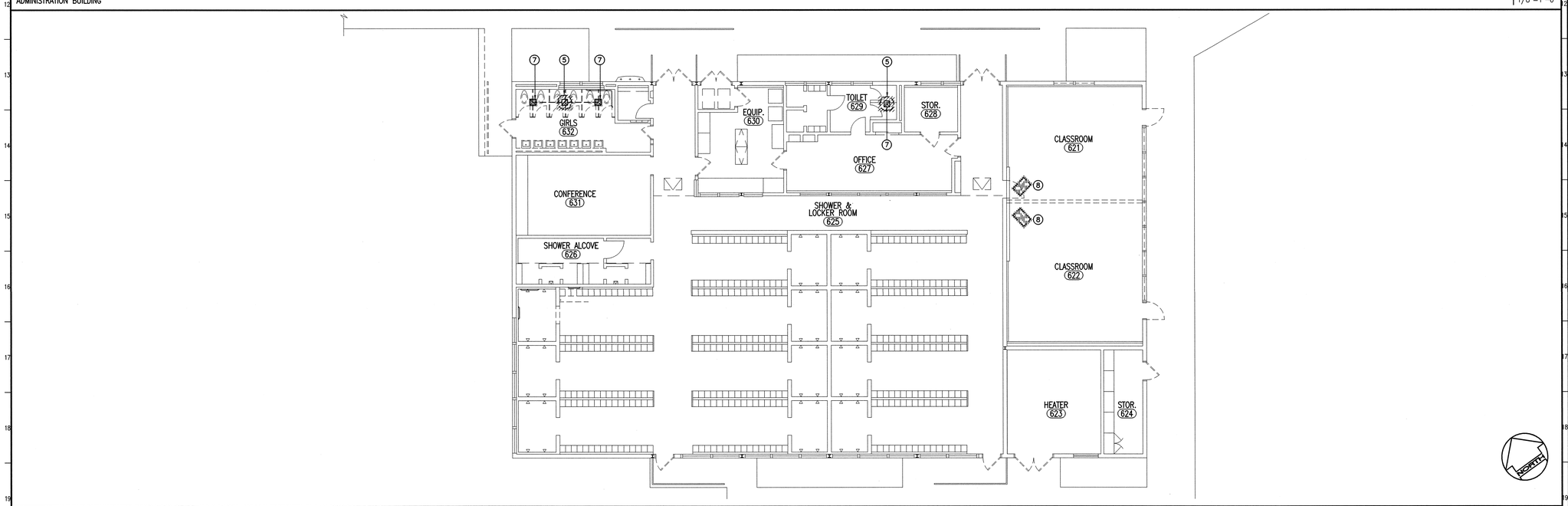

BUILDING O DEMOLITION PLAN

GIRLS LOCKER BUILDING

2

1/8"=1'-0"

DEMOLITION NOTES

1. EXISTING MULTI ZONE UNIT AND ALL RELATED DUCTWORK HOT WATER PIPING AND ALL ACCESSORIES IN THIS ROOM REMOVED COMPLETELY. ALL WATER PIPING, AFTER CUTTING, SHALL BE CAPPED IN WALL AND UNDER FLOOR
2. ALL DUCTWORK IN BUILDING TO REMAIN UNLESS NOTED OTHERWISE. DUCTWORK TO REMAIN IS TO BE CLEANED, SEE SPECIFICATIONS FOR DUCT CLEANING.
3. ALL SUPPLY AIR REGISTERS, DIFFUSERS, RETURN AIR REGISTERS, RELIEF GRILLES AND EXHAUST REGISTERS TO BE REMOVED AND REPLACED WITH NEW UNLESS NOTED OTHERWISE. SEE NEW PLANS, M106 AND M106.1 (AIR BALANCE SCHEDULES) FOR APPROXIMATE SIZES.
4. ALL HVAC RELATED HVAC CONTROL DEVICES & CONTROL WIRINGS TO BE REMOVED COMPLETELY UNLESS NOTED OTHERWISE
5. EXISTING ROOF MOUNTED EXHAUST FAN, ROOF CURB TO BE REMOVED.
6. EXISTING EXHAUST AIR REGISTER TO BE REMOVED. CAP DUCT AIR TIGHT IN WALL. REPAIR WALL TO MATCH EXISTING
7. EXISTING EXHAUST REGISTER TO BE REMOVED AND REPLACED WITH NEW
8. EXISTING SUSPENDED UNIT HEATER AND FLUE THRU. ROOF TO BE REMOVED. REPAIR ROOF TO MATCH SURROUNDING

GENERAL NOTE

BEFORE BIDDING ON THIS WORK, THE CONTRACTORS SHALL MAKE A CAREFUL EXAMINATION OF THE PREMISES, ESPECIALLY ALL THE MECHANICAL AND HEATER ROOMS CONTAINING EXISTING EQUIPMENT TO BE REMOVED, AND SHALL THOROUGHLY FAMILIARIZE THEMSELVES WITH THE REQUIREMENTS OF THE CONTRACT. BY THE ACT OF SUBMITTING A PROPOSAL FOR THE WORK INCLUDED IN THIS CONTRACT, THE CONTRACTOR SHALL BE DEEMED TO HAVE MADE SUCH STUDY AND EXAMINATION, AND THAT HE IS FAMILIAR WITH AND ACCEPTS ALL CONDITIONS OF THE SITE.

KEY PLAN

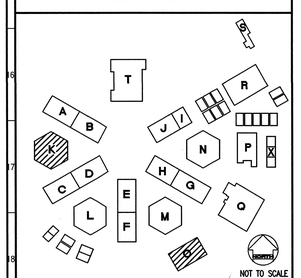

NOT TO SCALE

REVISED MAY 12 2004

IDENTIFICATION STAMP
DIV. OF THE STATE ARCHITECT
OFFICE OF REGULATION SERVICES
FILE NO. 19-H51
APPL. NO. 03-106434
AC____ FLS. NP SS____
DATE____

Dougherty + Dougherty
Architecture • Planning • Interior Design
3194-D Airport Loop Drive
Costa Mesa, CA 92626
(714) 427-0277

Copyright © 2002 Dougherty + Dougherty

FTA
Fletcher Thompson, Inc.
831 S. Harbor Blvd.
Anaheim, CA 92805
Phone (714) 772-4983
Fax (714) 772-7039
Job Number: 23084

Architect Seal

Consultant Seal

LA MIRADA HIGH SCHOOL MODERNIZATION

NORWALK - LA MIRADA UNIFIED SCHOOL DISTRICT
13520 ADELFA DRIVE LA MIRADA, CA 90638

CLASSROOMS K & O MECHANICAL DEMOLITION PLANS

Date:	04-01-04
Job:	20237.50
Scale:	1/8" = 1'
Drawn:	
Revisions:	
1	12-01-03

MD106

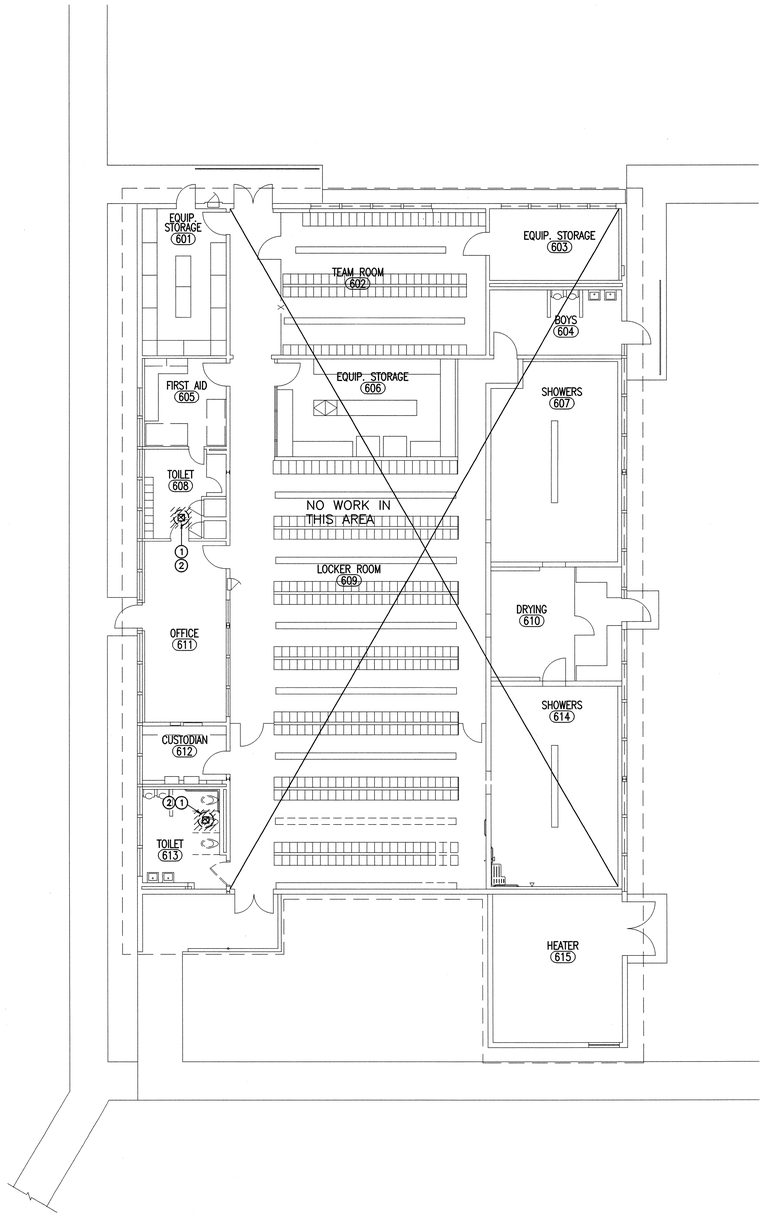

BUILDING P DEMOLITION PLAN

BOYS LOCKER ROOM BUILDING

2

1/8"=1'-0"

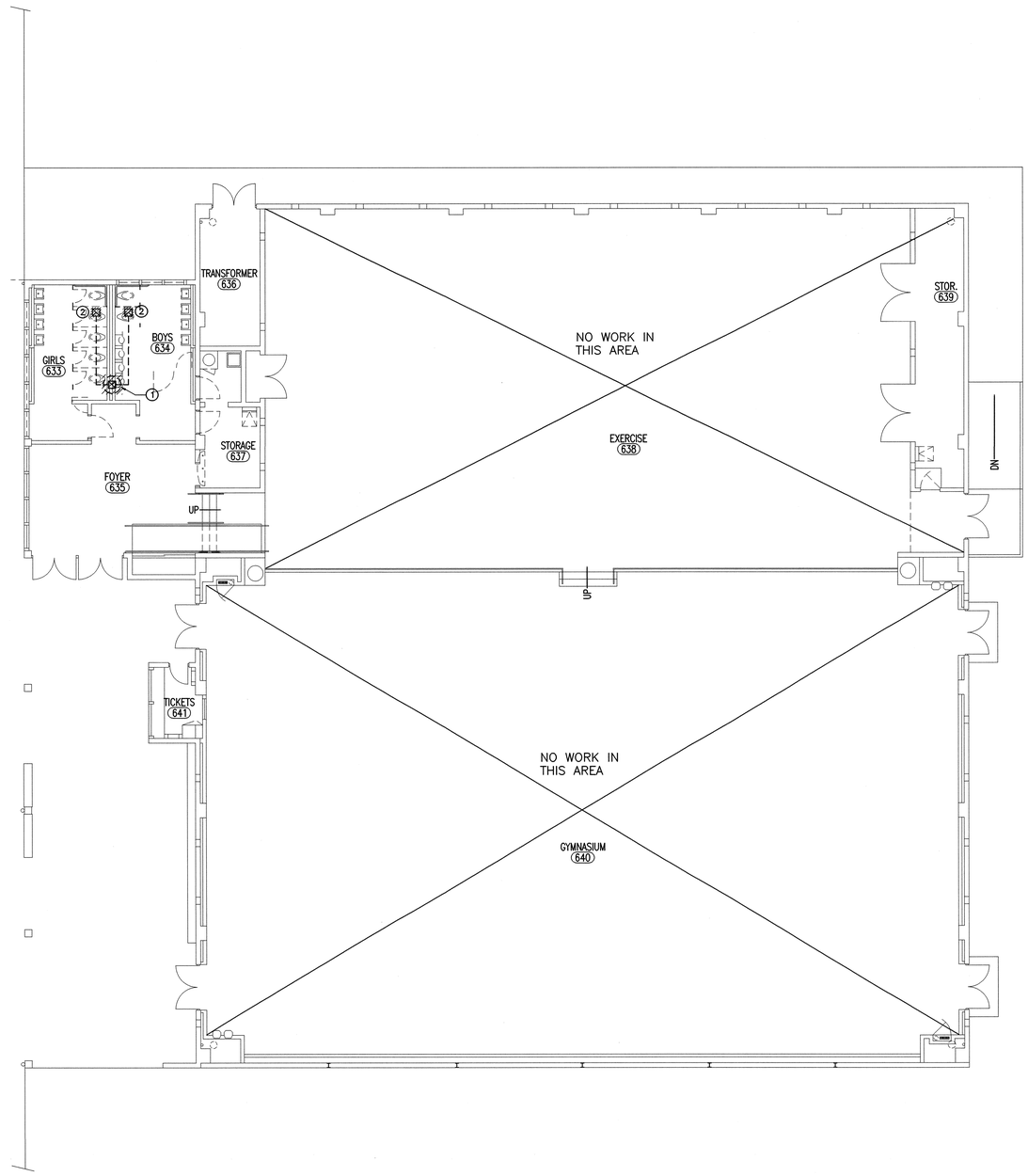

BUILDING Q DEMOLITION PLAN

GYMNASIUM BUILDING

1

1/8"=1'-0"

DEMOLITION NOTES

1. EXISTING EXHAUST FAN ON ROOF & ROOF CURB TO BE REMOVED
2. EXISTING GRILLE TO BE REMOVED & REPLACED W/NEW

KEY PLAN

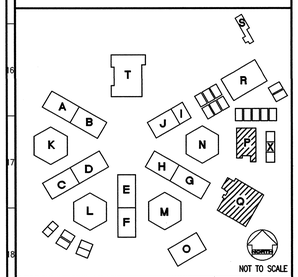

IDENTIFICATION STAMP
DIV. OF THE STATE ARCHITECT
OFFICE OF REGULATION SERVICES
FILE NO. 19-H51
APPL. NO. 03-106434
AC____ FLS. N/A SS____
DATE____

MAY 1 2 2004

Dougherty ■ Dougherty
Architecture · Planning · Interior Design
2194-D Airport Loop Drive
Costa Mesa, CA 92626
(714) 427-0277

Copyright © 2002 Dougherty + Dougherty

FTA
Fleming & Associates
838 N. Harbor Blvd.
Anaheim, CA 92805
Phone (714) 772-9993
Fax (714) 772-9998
File Number: 22064
Job Number:

REGISTERED PROFESSIONAL ENGINEER
CIVIL
No. C-9824
Exp. 12/31/04
STATE OF CALIFORNIA

Architect Seal

REGISTERED PROFESSIONAL ENGINEER
STRUCTURAL
No. S-4721
Exp. 12/31/04
STATE OF CALIFORNIA

Consultant Seal

LA MIRADA HIGH SCHOOL MODERNIZATION

NORWALK - LA MIRADA UNIFIED SCHOOL DISTRICT
13520 ADELFA DRIVE LA MIRADA, CA 90638

CLASSROOMS P & Q MECHANICAL DEMOLITION PLANS

Date:	04-01-04
Job:	20237.50
Scale:	1/8" = 1'
Drawn:	
Revisions:	
1	12-01-03

MD107

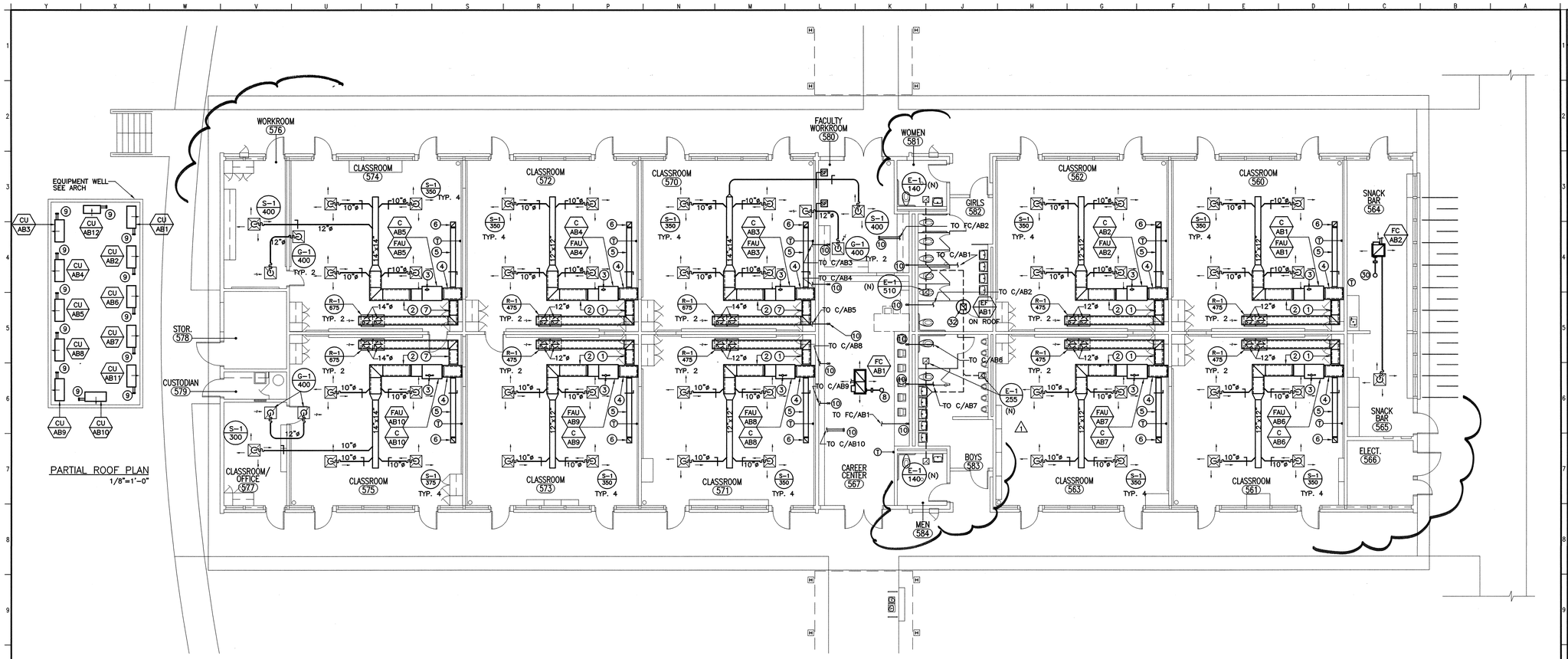

BUILDINGS A & B FLOOR PLANS

1
1/8"=1'-0"

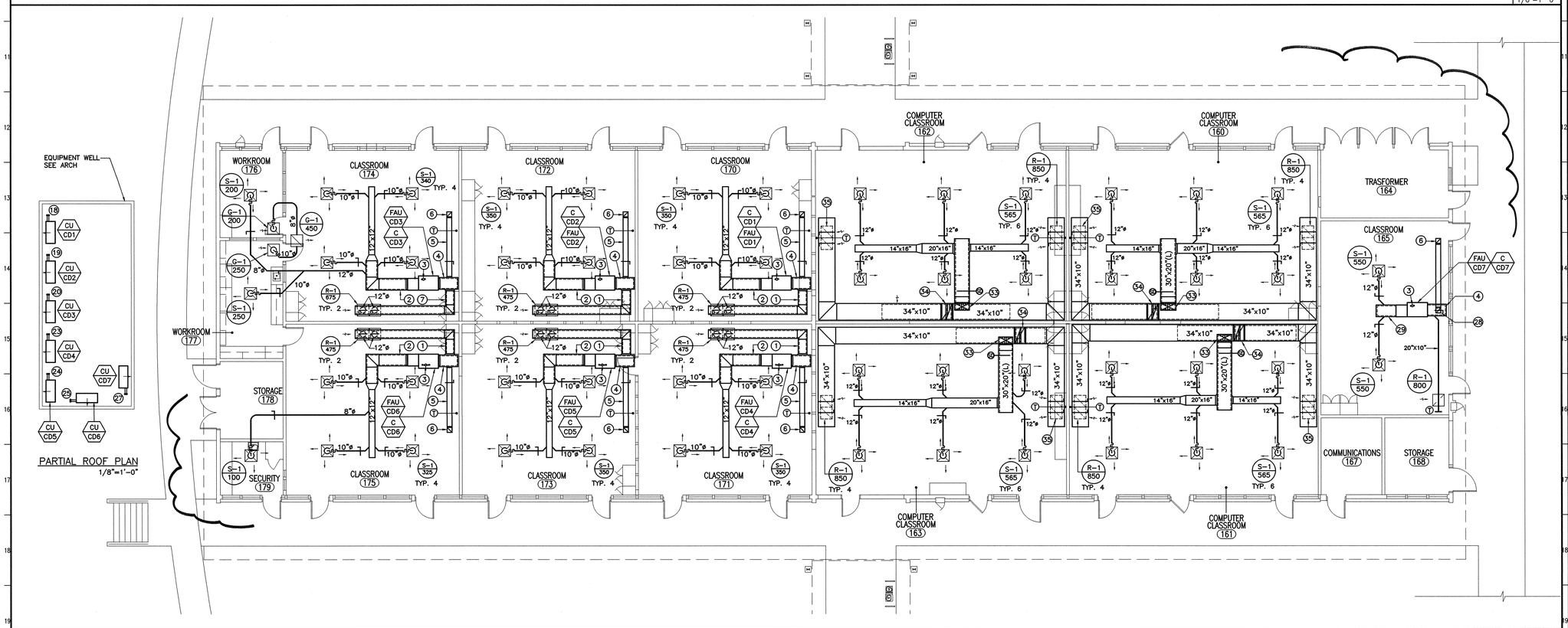

BUILDINGS C & D FLOOR PLANS

1
1/8"=1'-0"

CONSTRUCTION NOTES

1. 20"x14"(L) RAD
2. 20"x20"(L) SAD
3. CONNECT 2"ø COMBUSTION & 2"ø VENT PIPES TO 3-1/2"ø CONCENTRIC VENT & RUN VENT UTR
4. LINED RETURN AIR PLENUM, SIZE TO MATCH OPENING @ FURNACE
5. 10"x10" OSA DUCT W/ MVD SET @ 450 CFM
6. 10"x10" OSA DUCT UTR. RUN DUCT 10'-0" MIN. AWAY FROM FLUES AND PLUMBING VENTS PROVIDE GOOSE NECK ON ROOF.
7. 22"x16"(L) RAD
8. NOT USED
9. REFRIGERANT PIPING DTR
10. REFRIGERANT PIPING UTR
11. NOT USED
12. NOT USED
13. NOT USED
14. NOT USED
15. LINED SUPPLY AIR PLENUM, SIZE TO MATCH OPENING @ FAN COIL
16. NOT USED
17. NOT USED
18. REFRIGERANT PIPING DTR. RUN PIPES TO C/CD1
19. REFRIGERANT PIPING DTR. RUN PIPES TO C/CD2
20. REFRIGERANT PIPING DTR. RUN PIPES TO C/CD3
21. NOT USED
22. NOT USED
23. REFRIGERANT PIPING DTR. RUN PIPES TO C/CD4
24. REFRIGERANT PIPING DTR. RUN PIPES TO C/CD5
25. REFRIGERANT PIPING DTR. RUN PIPES TO C/CD6
26. NOT USED
27. REFRIGERANT PIPING DTR. RUN PIPES TO C/CD7
28. 10"x10" OSA DUCT DN. TO RETURN AIR PLENUM SET DAMPER @ 300 CFM
29. LINED SUPPLY AIR PLENUM, SIZE TO MATCH OPENING @ COOLING COIL
30. 8"ø OSA DUCT UTR, 100 CFM
31. NOT USED
32. CONNECT NEW 12"x12" EAD TO EXISTING EAD. RUN DUCT UTR TO EF
33. 30"x14"(L) SAD UTR
34. 34"x20"(L) RAD TRANSITION TO 34"x12"(L) UTR
35. DUCT DROP TO MATCH REGISTER NECK SIZE. TYPICAL

△1

KEY PLAN

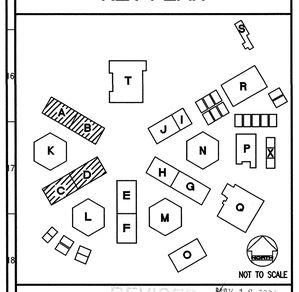

REVISED MAY 12 2004

IDENTIFICATION STAMP
DIV. OF THE STATE ARCHITECT
OFFICE OF REGULATION SERVICES
FILE NO. 19-H51
APPL. NO. 03-106454
AC.____ FLS. NET SS.____
DATE:____

Dougherty + Dougherty
Architecture • Planning • Interior Design
3536 Concours, Suite 100
Ontario, CA 91764
(714) 427-0277

Copyright © 2002 Dougherty + Dougherty

FTA
Fire Technologies
631 S. Hacienda Blvd.
Hacienda Heights, CA 91745
Phone (714) 772-9293
Fax (714) 772-9299
Job Number: 23084

Architect Seal

Consultant Seal

LA MIRADA HIGH SCHOOL MODERNIZATION

NORWALK - LA MIRADA UNIFIED SCHOOL DISTRICT
13520 ADELFA DRIVE LA MIRADA, CA 90638

CLSRMS A, B, C & D MECHANICAL FLOOR PLANS

Date:	04-01-04
Job:	20237.50
Scale:	1/8" = 1'
Drawn:	
Revisions:	
△1	12-01-03

M101

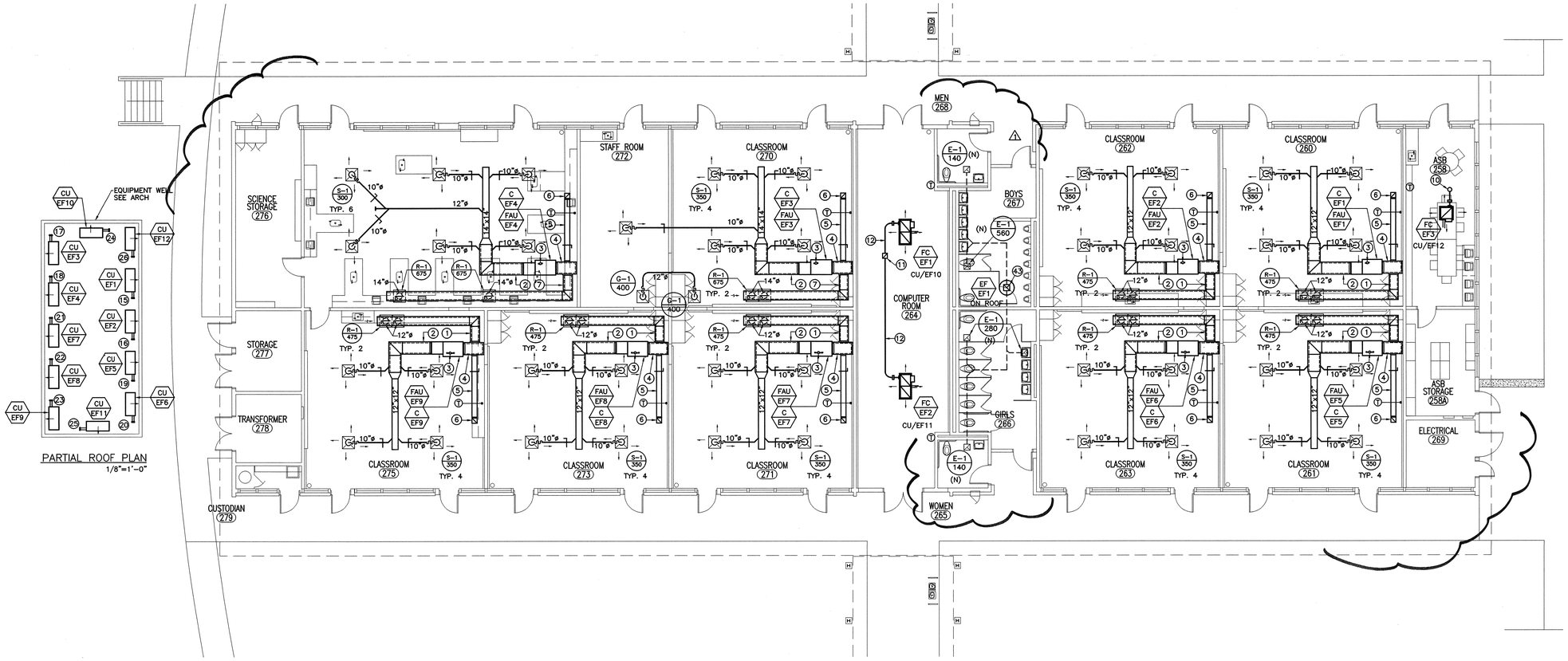

BUILDINGS E & F FLOOR PLANS

1
1/8"=1'-0"

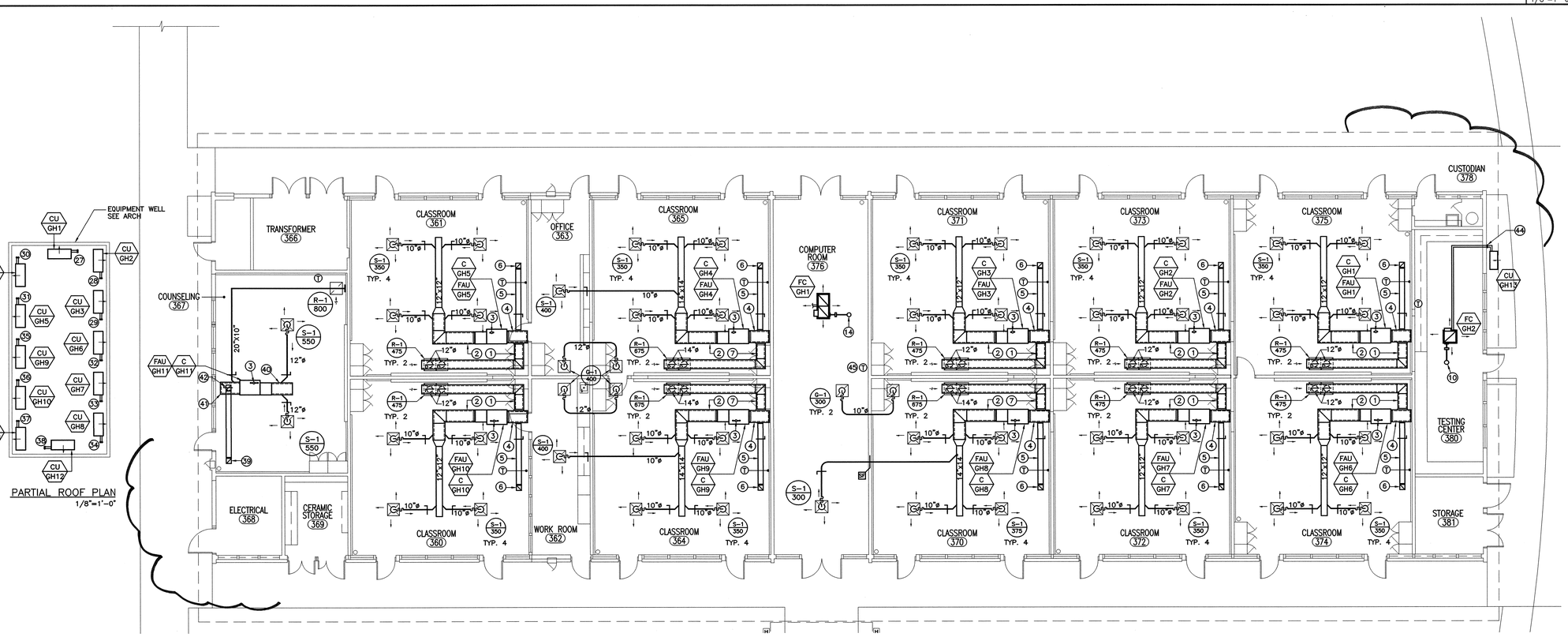

BUILDINGS G & H FLOOR PLANS

1
1/8"=1'-0"

CONSTRUCTION NOTES

1. 20"x14"(L) RAD
2. 20"x20"(L) SAD
3. CONNECT 2"ø COMBUSTION & 2"ø VENT PIPES TO 3-1/2"ø CONCENTRIC VENT & RUN VENT UTR
4. LINED RETURN AIR PLENUM, SIZE TO MATCH OPENING @ FURNACE
5. 10"x10" OSA DUCT W/ MVD SET @ 450 CFM
6. 10"x10" OSA DUCT UTR. RUN DUCT 10'-0" MIN. AWAY FROM FLUES AND PLUMBING VENTS PROVIDE GOOSE NECK ON ROOF.
7. 22"x16"(L) RAD
8. NOT USED
9. NOT USED
10. 8"ø OSA DUCT UTR, 100 CFM
11. 10"x10" OSA DUCT UTR. RUN DUCT 10'-0" MIN. AWAY FROM FLUES AND PLUMBING VENTS PROVIDE GOOSE NECK ON ROOF.
12. 8"ø OSA DUCT, 150 CFM
13. NOT USED
14. 8"ø OSA DUCT UTR, 150 CFM
15. REFRIGERANT PIPING DTR. RUN PIPES TO C/EF1
16. REFRIGERANT PIPING DTR. RUN PIPES TO C/EF2
17. REFRIGERANT PIPING DTR. RUN PIPES TO C/EF3
18. REFRIGERANT PIPING DTR. RUN PIPES TO C/EF4
19. REFRIGERANT PIPING DTR. RUN PIPES TO C/EF5
20. REFRIGERANT PIPING DTR. RUN PIPES TO C/EF6
21. REFRIGERANT PIPING DTR. RUN PIPES TO C/EF7
22. REFRIGERANT PIPING DTR. RUN PIPES TO C/EF8
23. REFRIGERANT PIPING DTR. RUN PIPES TO C/EF9
24. REFRIGERANT PIPING DTR. RUN PIPES TO FC/EF1
25. REFRIGERANT PIPING DTR. RUN PIPES TO FC/EF2
26. REFRIGERANT PIPING DTR. RUN PIPES TO FC/EF3
27. REFRIGERANT PIPING DTR. RUN PIPES TO C/GH1
28. REFRIGERANT PIPING DTR. RUN PIPES TO C/GH2
29. REFRIGERANT PIPING DTR. RUN PIPES TO C/GH3
30. REFRIGERANT PIPING DTR. RUN PIPES TO C/GH4
31. REFRIGERANT PIPING DTR. RUN PIPES TO C/GH5
32. REFRIGERANT PIPING DTR. RUN PIPES TO C/GH6
33. REFRIGERANT PIPING DTR. RUN PIPES TO C/GH7
34. REFRIGERANT PIPING DTR. RUN PIPES TO C/GH8
35. REFRIGERANT PIPING DTR. RUN PIPES TO C/GH9
36. REFRIGERANT PIPING DTR. RUN PIPES TO C/GH10
37. REFRIGERANT PIPING DTR. RUN PIPES TO C/GH11
38. REFRIGERANT PIPING DTR. RUN PIPES TO FC/EF1
39. 10"x10" OSA DUCT DN TO RA PLENUM, 300 CFM
40. LINED SUPPLY AIR PLENUM, SIZE TO MATCH OPENING @ COOLING COIL
41. LINED RETURN AIT PLENUM, SIZE TO MATCH OPENING @ FURNACE
42. 10"x10" OSA DUCT UTR. RUN DUCT 10'-0" MIN. AWAY FROM FLUES AND PLUMBING VENTS PROVIDE GOOSE NECK ON ROOF.
43. CONNECT NEW 12"x12" EAD TO EXISTING EAD. RUN DUCT UTR TO EF
44. RUN REFRIGERANT PIPING UP ALONG WALL AND THRU. WALL TO FAN COIL AS INDICATED. PROVIDE SHEET METAL COVER ALONG WALL.
45. THERMOSTAT MUST NOT BE LOCATED BEHIND OR DIRECTLY ABOVE MONITOR, COMPUTER OR PRINTER

KEY PLAN

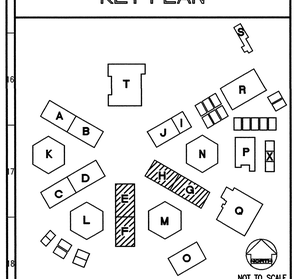

IDENTIFICATION STAMP
DIV. OF THE STATE ARCHITECT
OFFICE OF REGULATION SERVICES
FILE NO. 19-H51
APPL. NO. 03-106434
AC. ____ FLS. N/A SS. ____
DATE ____

MAY 12 2003

Dougherty ■ Dougherty
Architecture • Planning • Interior Design
3194-D Airport Loop Drive
Costa Mesa, CA 92626
(714) 327-0277

Copyright © 2002 Dougherty + Dougherty

FTA
F.T. ARCHITECTS
831 S. Harbor Blvd.
Anaheim, CA 92805
Phone: (714) 772-2783
Fax: (714) 772-2789
Job Number: 22084

Architect Seal

Consultant Seal

LA MIRADA HIGH SCHOOL MODERNIZATION

NORWALK - LA MIRADA UNIFIED SCHOOL DISTRICT
13520 ADELFA DRIVE LA MIRADA, CA 90638

CLSRMS E, F, G & H MECHANICAL FLOOR PLANS

Date:	04-01-04
Job:	20237.50
Scale:	1/8" = 1'
Drawn:	
Revisions:	
1	12-01-03

M102

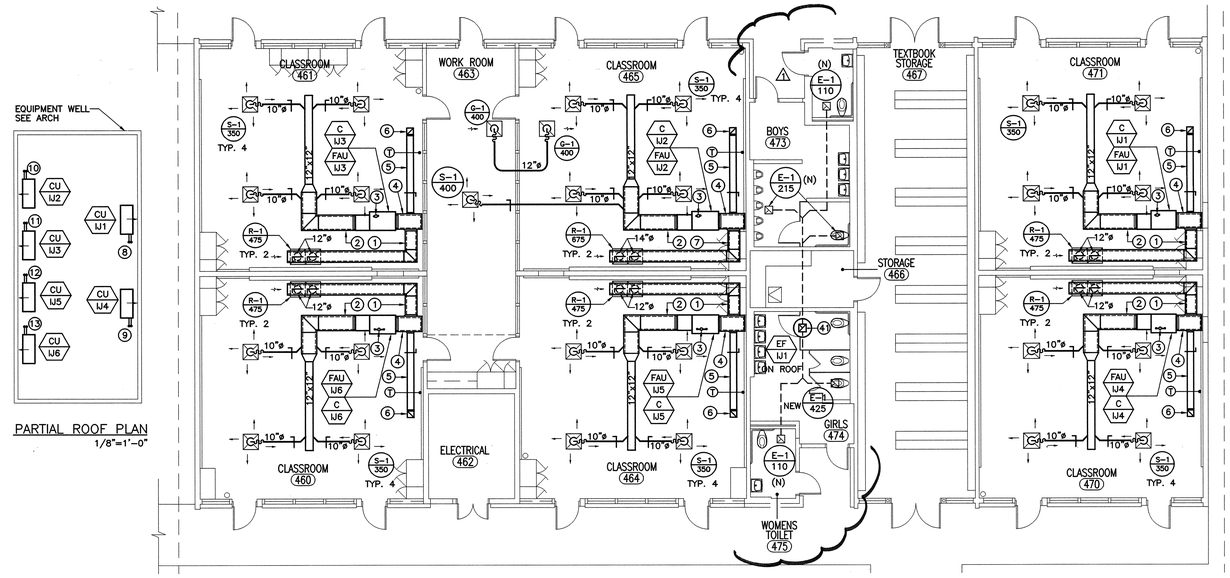

PARTIAL ROOF PLAN
1/8"=1'-0"

BUILDINGS I, & J FLOOR PLANS

1
1/8"=1'-0"

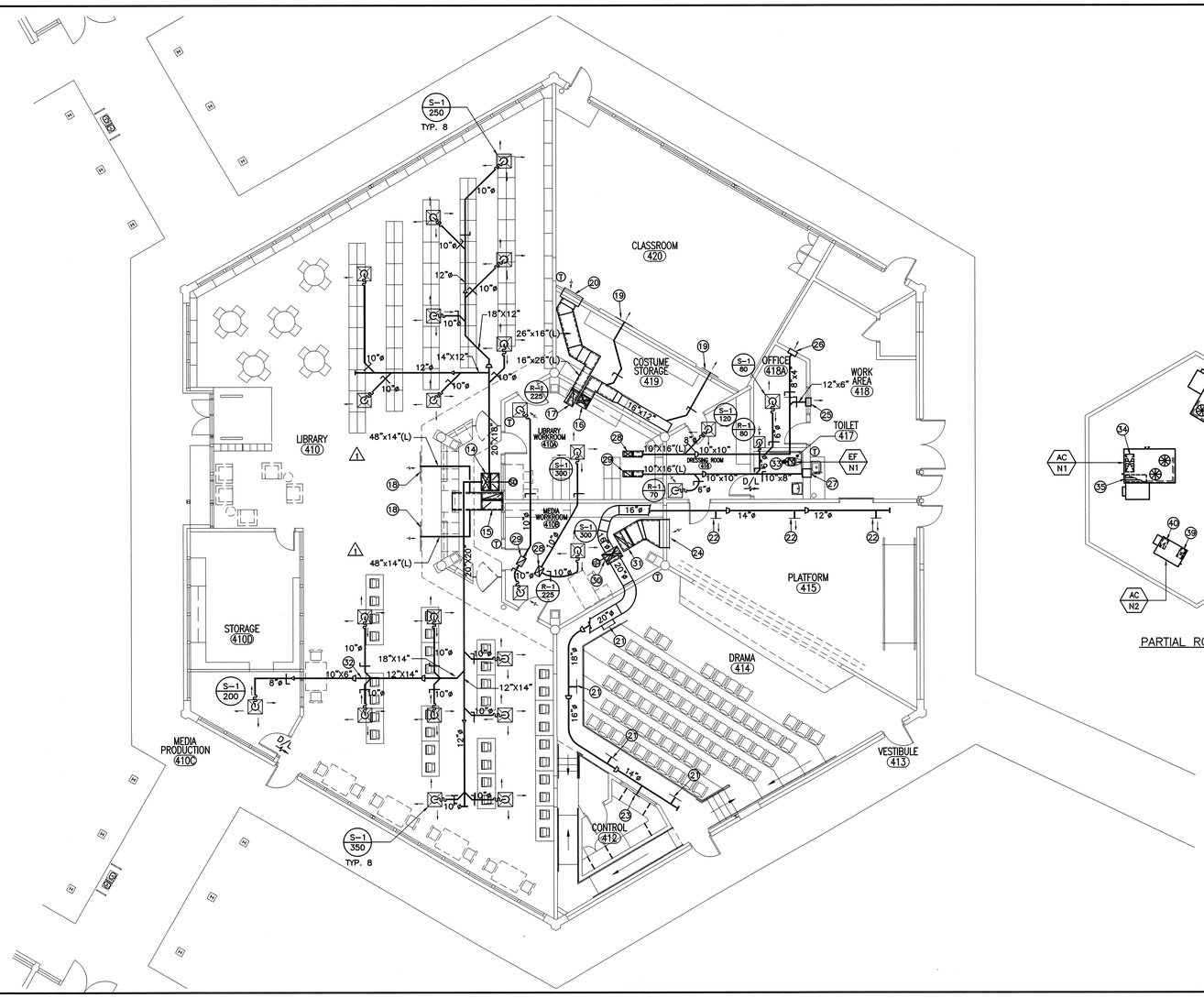

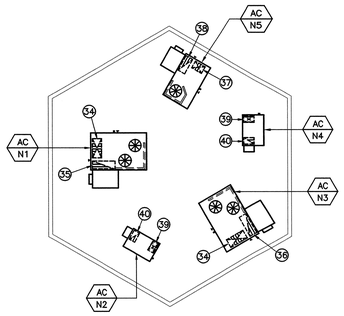

PARTIAL ROOF PLAN
1/8"=1'-0"

BUILDING N FLOOR PLAN

1
1/8"=1'-0"

CONSTRUCTION NOTES

1. 20"x14"(L) RAD
2. 20"x20"(L) SAD
3. CONNECT 2"ø COMBUSTION & 2"ø VENT PIPES TO 3-1/2"ø CONCENTRIC VENT & RUN VENT UTR
4. LINED RETURN AIR PLENUM, SIZE TO MATCH OPENING @ FURNACE
5. 10"x10" OSA DUCT W/ MVD SET @ 450 CFM
6. 10"x10" OSA DUCT UTR. RUN DUCT 10'-0" MIN. AWAY FROM FLUES AND PLUMBING VENTS PROVIDE GOOSE NECK ON ROOF.
7. 22"x16"(L) RAD
8. REFRIGERANT PIPING DTR. RUN PIPES TO C/IJ1
9. REFRIGERANT PIPING DTR. RUN PIPES TO C/IJ2
10. REFRIGERANT PIPING DTR. RUN PIPES TO C/IJ3
11. REFRIGERANT PIPING DTR. RUN PIPES TO C/IJ4
12. REFRIGERANT PIPING DTR. RUN PIPES TO C/IJ5
13. REFRIGERANT PIPING DTR. RUN PIPES TO C/IJ6
14. 30"x30"(L) SAD TRANSITION TO 30"x14" (L) UTR
15. 36"x30"(L) RAD TRANSITION TO 36"x12" (L) UTR
16. 20"x18"(L) SAD TRANSITION TO 18"x12" (L) UTR
17. 26"x16"(L) RAD TRANSITION TO 26"x12" (L) UTR
18. 48"x24" SWR, 2500 CFM
19. 30"x10" SWS, 1000 CFM
20. 36"x16" SWR, 2000 CFM
21. 22"x8" SWR, 535 CFM
22. 16"x8" SWR, 365 CFM
23. 12"x6" SWR, 150 CFM
24. 48"x30" SWR, 3400 CFM
25. 18"x6" SWS, 300 CFM
26. 14"x4" SWS, 100 CFM
27. 18"x8" SWS, 300 CFM
28. 16"x10"(L) SAD UTR
29. 16"x10"(L) RAD UTR
30. 30"x20"(L) SAD TRANSITION TO 30"x14" (L) UTR
31. 34"x20"(L) RAD TRANSITION TO 34"x12" (L) UTR
32. RUN DUCT BETWEEN JOIST SPACE
33. 8"ø EAD UTR
34. 30"x14"(L) SAD DTR
35. 36"x12"(L) RAD DTR
36. 34"x12"(L) RAD DTR
37. 18"x12"(L) SAD DTR
38. 26"x12"(L) RAD DTR
39. 16"x10"(L) SAD DTR
40. 16"x10"(L) RAD DTR
41. CONNECT NEW 12"x12" EAD TO EXISTING EAD. RUN DUCT UTR TO EF

KEY PLAN

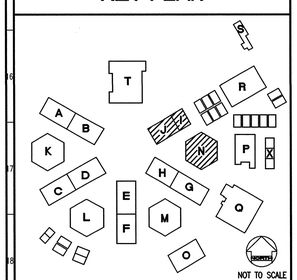

REVISED MAY 12 2004

IDENTIFICATION STAMP
DIV. OF THE STATE ARCHITECT
OFFICE OF REGULATION SERVICES
FILE NO. 19-H51
APPL. NO. 03-106434
AC. FLS. SS.
DATE

Dougherty ■ Dougherty
Architecture • Planning • Interior Design
3194-D Airport Loop Drive
Costa Mesa, CA 92626
(714) 957-0777

Copyright © 2002 Dougherty + Dougherty

FTA
831 S. Harbor Blvd.
Anaheim, CA 92805
Phone: (714) 772-9280
Fax: (714) 772-9789
Job Number: 22084

Architect Seal

Consultant Seal

LA MIRADA HIGH SCHOOL MODERNIZATION

NORWALK - LA MIRADA UNIFIED SCHOOL DISTRICT
13520 ADELFA DRIVE LA MIRADA, CA 90638

CLSRMS I, J & N MECHANICAL FLOOR PLANS

Date:	04-01-04
Job:	20237.50
Scale:	1/8" = 1'
Drawn:	
Revisions:	
1	12-01-03

M103

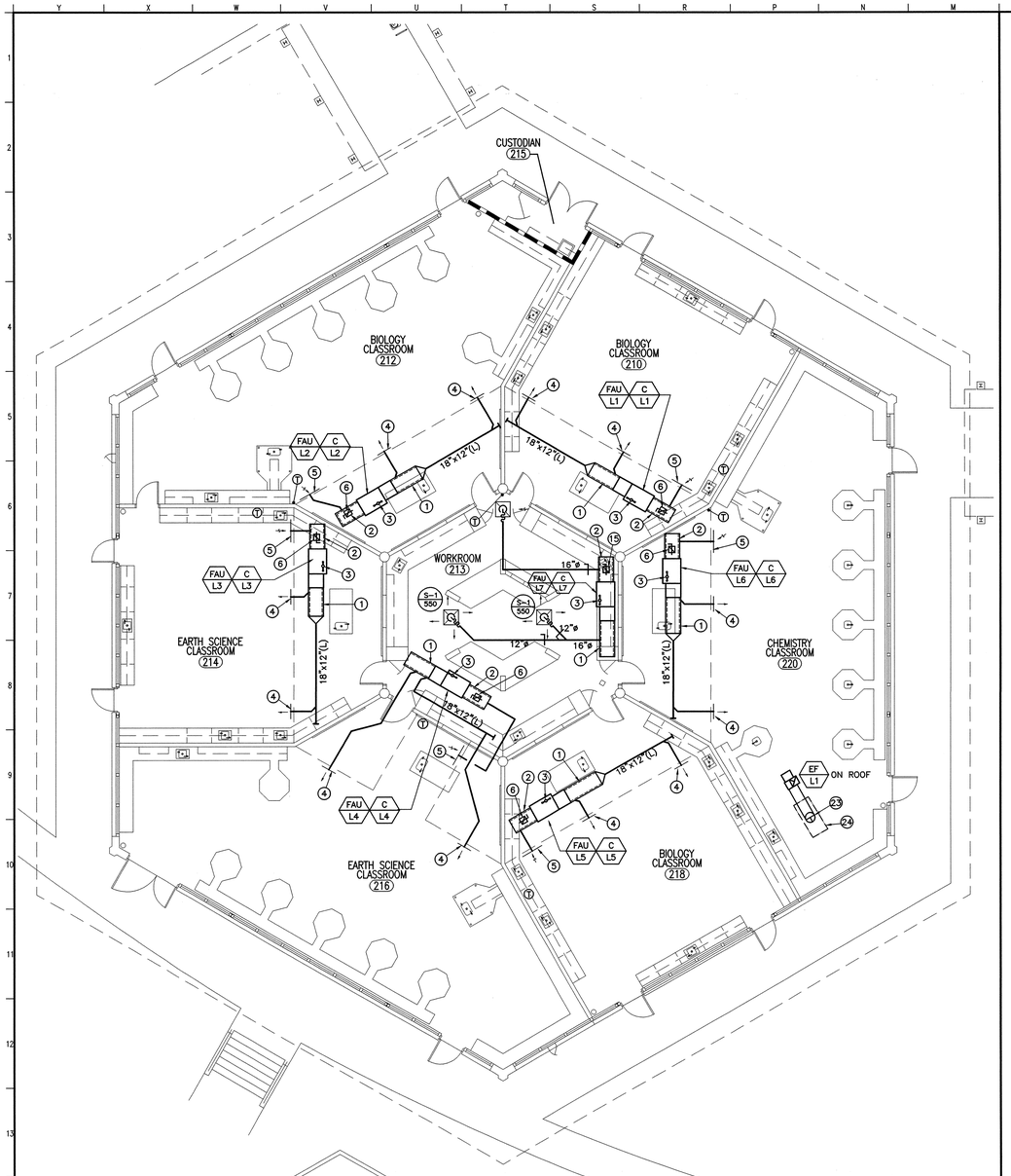

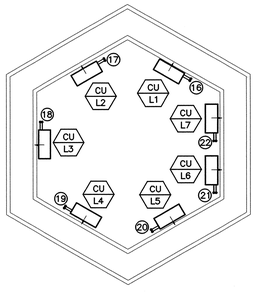

PARTIAL ROOF PLAN
1/8"=1'-0"

BUILDING L FLOOR PLAN | 2 | 1/8"=1'-0"

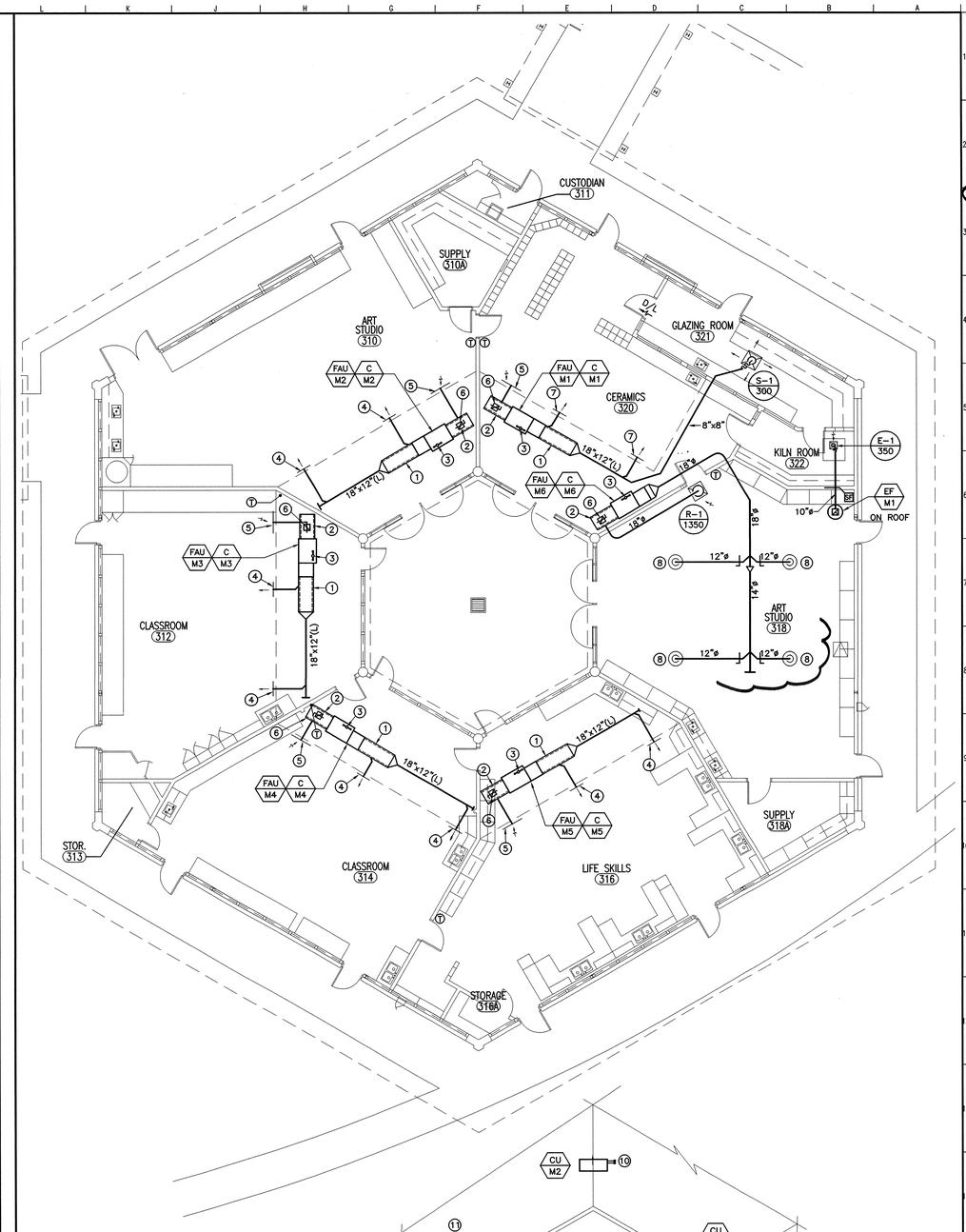

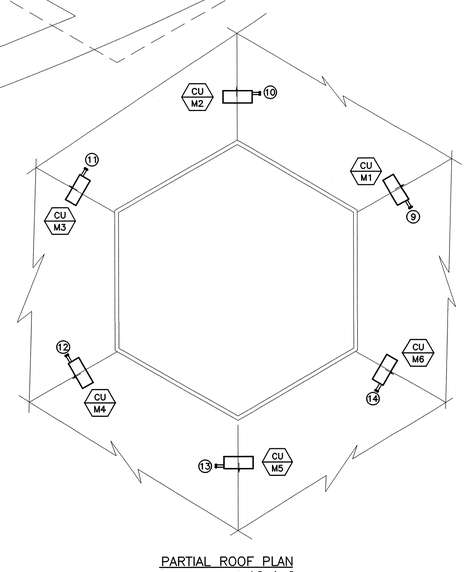

PARTIAL ROOF PLAN
1/8"=1'-0"

BUILDING M FLOOR PLAN | 1 | 1/8"=1'-0"

CONSTRUCTION NOTES

1. LINED SUPPLY AIR PLENUM, SIZE TO MATCH OPENING @ COOLING COIL
2. LINED RETURN AIR PLENUM, SIZE TO MATCH OPENING @ FURNACE
3. CONNECT 2"ø COMBUSTION & 2"ø VENT PIPES TO 3-1/2"ø CONCENTRIC VENT & RUN VENT UTR. 3-1/2"ø CONCENTRIC VENT & RUN VENT UTR.
4. 24"x12" SWS, 900 CFM
5. 36"x20" SWR, 1350 CFM
6. 10"x10" OSA DUCT UTR, SET @ 450 CFM. PROVIDE GOOSE NECK ON ROOF
7. 24"x10" SWS, 750 CFM
4. LINED RETURN AIR PLENUM, SIZE TO MATCH OPENING @ FURNACE
5. 10"x10" OSA DUCT DN. TO RETURN AIR PLENUM SET DAMPER @ 450 CFM
6. 10"x10" OSA DUCT UTR. RUN DUCT 10'-0" MIN. AWAY FROM FLUES AND PLUMBING VENTS TERMINATE VENT 3' MIN. ABOVE OSA DUCT
7. 24"x10" SWS, 750 CFM
8. ROUND CEILING DIFFUSER, ANEMOSTAT MODEL # C-27, 12" NECK SIZE, 450 CFM
9. REFRIGERANT PIPING DTR. RUN PIPES TO C/M1
10. REFRIGERANT PIPING DTR. RUN PIPES TO C/M2
11. REFRIGERANT PIPING DTR. RUN PIPES TO C/M3
12. REFRIGERANT PIPING DTR. RUN PIPES TO C/M4
13. REFRIGERANT PIPING DTR. RUN PIPES TO C/M5
14. REFRIGERANT PIPING DTR. RUN PIPES TO C/M6
15. 8"x8" OSA DUCT UTR, SET @ 150 CFM. PROVIDE GOOSE NECK ON ROOF AND TERMINATE DUCT MIN. 3' ABOVE FLUE VENT
16. REFRIGERANT PIPING DTR. RUN PIPES TO C/L1
17. REFRIGERANT PIPING DTR. RUN PIPES TO C/L2
18. REFRIGERANT PIPING DTR. RUN PIPES TO C/L3
19. REFRIGERANT PIPING DTR. RUN PIPES TO C/L4
20. REFRIGERANT PIPING DTR. RUN PIPES TO C/L5
21. REFRIGERANT PIPING DTR. RUN PIPES TO C/L6
22. REFRIGERANT PIPING DTR. RUN PIPES TO C/L7
23. 16"ø STAINLESS STEEL DUCT UTR. PROVIDE TRANSITION FOR CONNECTION @ HOOD AS REQUIRED
24. EXISTING FUME HOOD

KEY PLAN

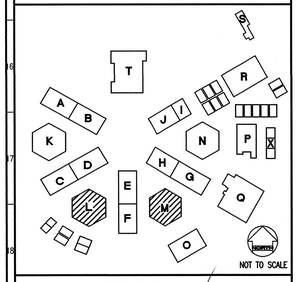

REVISED MAY 12 2004

IDENTIFICATION STAMP
DIV. OF THE STATE ARCHITECT
OFFICE OF REGULATION SERVICES
FILE NO. 19-H51
APPL. NO. 03-106434
AC.____ FLS. NT SS.____
DATE ____

Dougherty + Dougherty
Architecture • Planning • Interior Design
31504 Rancho Viejo Road, Suite D
Capistrano Beach, CA 92624
(949) 661-1200 FAX (949) 661-1201

Copyright © 2002 Dougherty + Dougherty

FTA
Fred T. Aslanian
Consulting Engineers
838 S. Hope Street
Los Angeles, CA 90015
Phone (714) 772-8983
Fax (714) 772-8989
Job Number: 22084

Architect Seal

Consultant Seal

LA MIRADA HIGH SCHOOL MODERNIZATION

NORWALK - LA MIRADA UNIFIED SCHOOL DISTRICT
13520 ADELFA DRIVE LA MIRADA, CA 90638

CLSRMS L & M MECHANICAL FLOOR PLANS

Date:	04-01-04
Job:	20237.50
Scale:	1/8" = 1'
Drawn:	
Revisions:	

M104

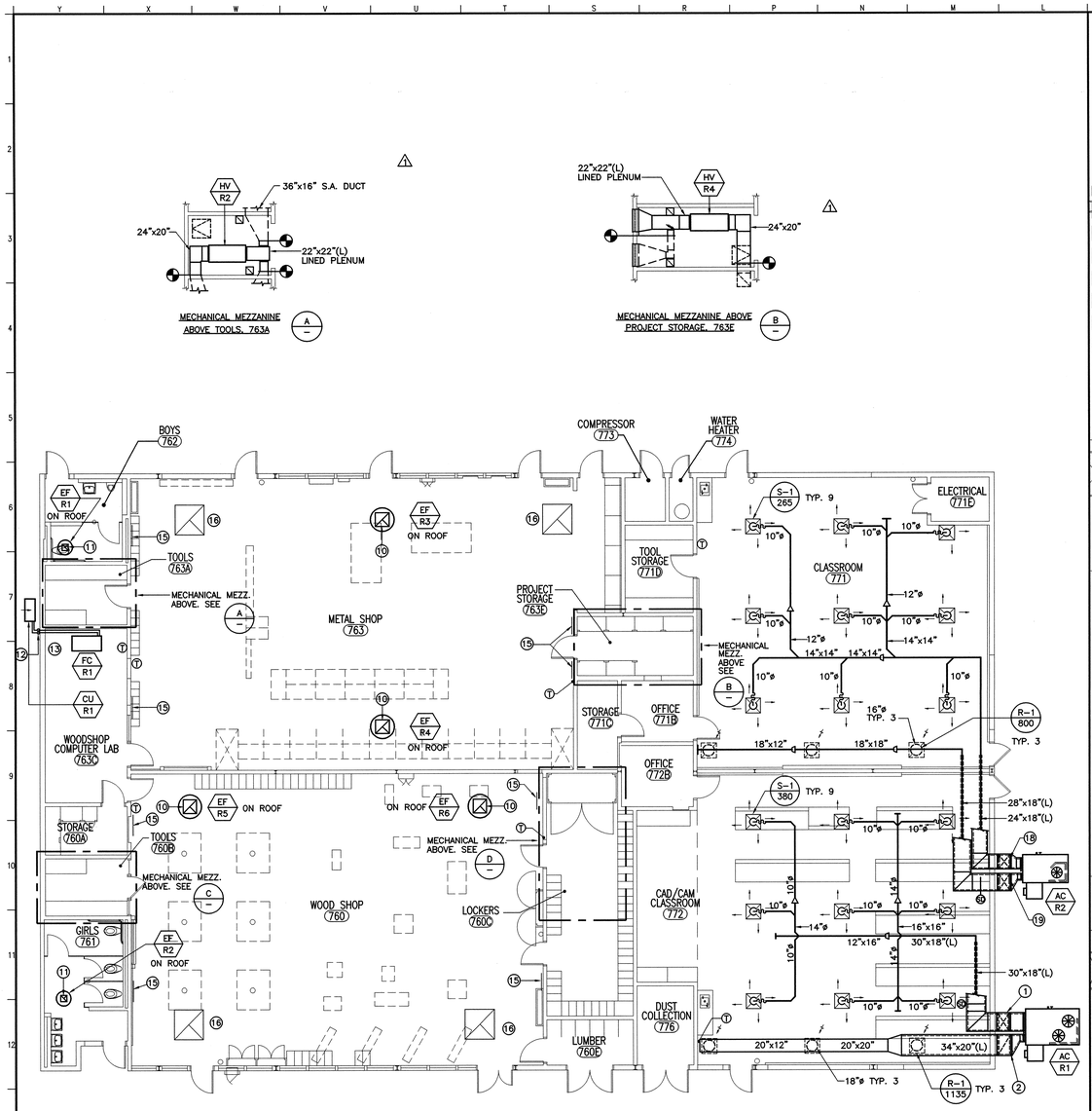

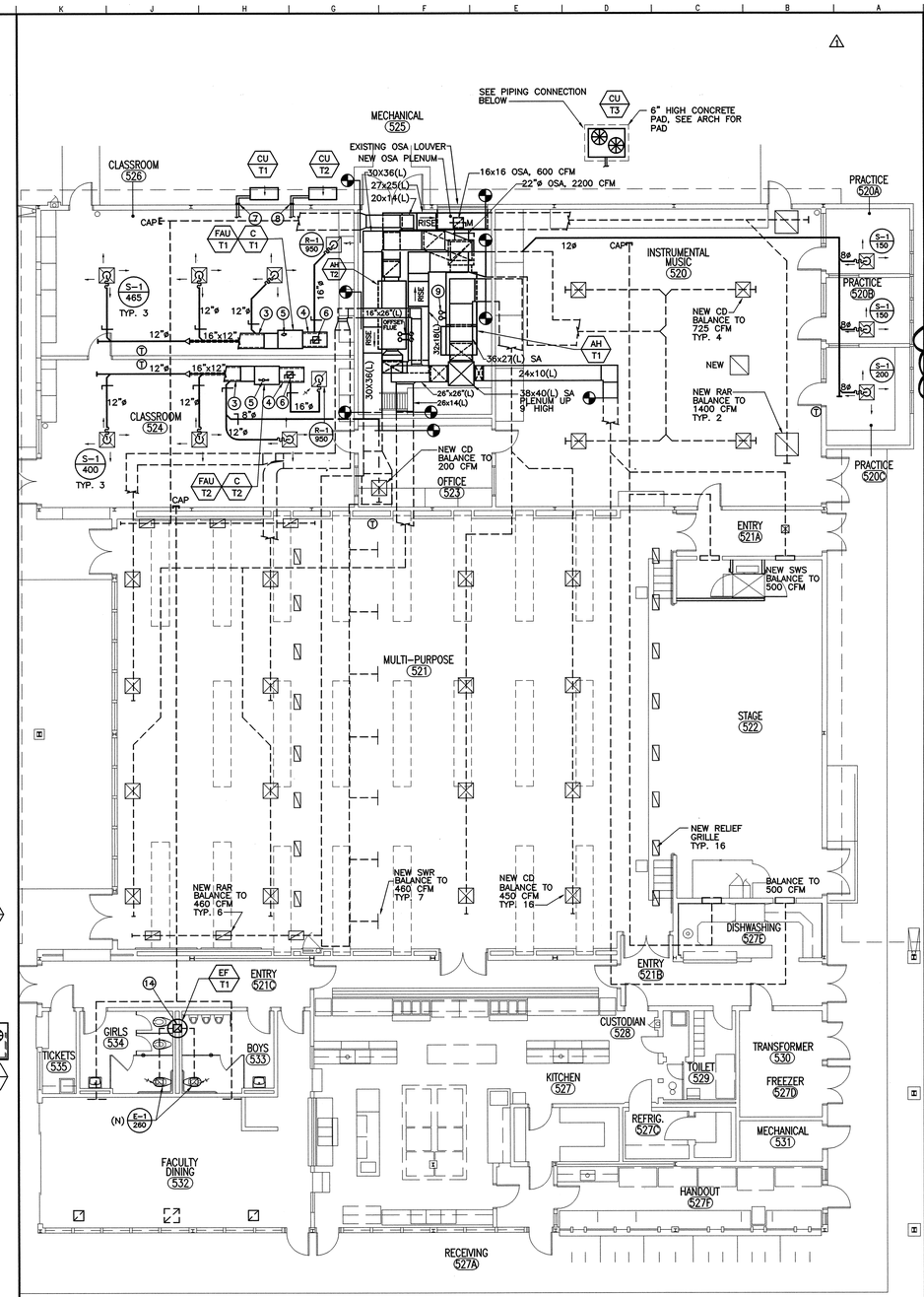

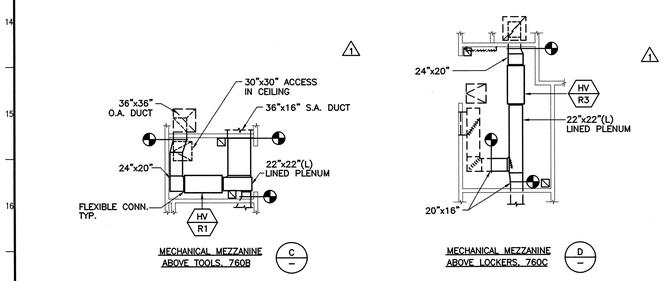

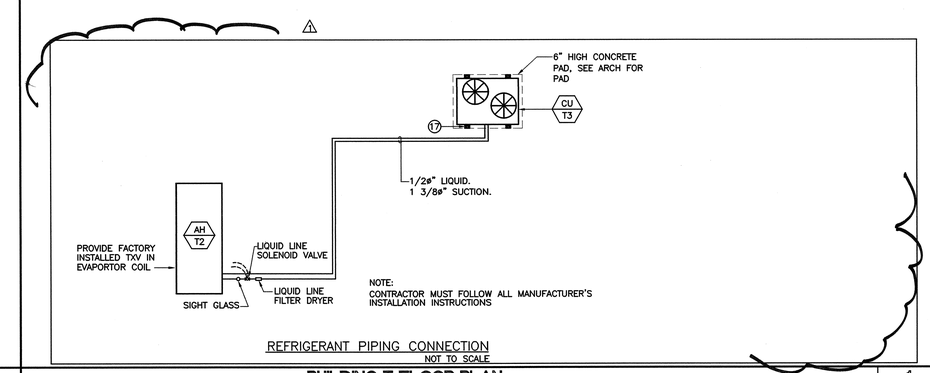

CONSTRUCTION NOTES

1. 30"x18"(L) SAD, RUN DUCT UP ALONG WALL INDICATED
2. 34"x20"(L) RAD, RUN DUCT UP ALONG WALL INDICATED
3. LINED SUPPLY AIR PLENUM, SIZE TO MATCH OPENING @ COOLING COIL
4. LINED RETURN AIR PLENUM, SIZE TO MATCH OPENING @ FURNACE
5. CONNECT 2"ø COMBUSTION & 2"ø VENT PIPES TO 3-1/2"ø CONCENTRIC VENT & RUN VENT UTR TERMINATE VENT MIN. 3' ABOVE OSA DUCT
6. 10"x10" OSA DUCT UTR. SET @ 450 CFM
7. RUN REFRIGERANT PIPING UP ALONG WALL AND THRU WALL @ ABOVE CEILING LEVEL AND ROUTE PIPING TO C/T1
8. RUN REFRIGERANT PIPING UP ALONG WALL AND THRU WALL @ ABOVE CEILING LEVEL AND ROUTE PIPING TO C/T2
9. VERTICAL VENT TERMINAL/COMBUSTION AIR INLET (OPTION CC2). TYPICAL 2
10. NEW EAR W/ 22"x22" EAD UTR
11. NEW EAR W/ 10"x10" EAD UTR
12. RUN REFRIGERANT PIPING UP ALONG WALL AND THRU. WALL TO FAN COIL AS INDICATED. PROVIDE SHEET METAL COVER ALONG WALL.
13. RUN PIPING TIGHT TO WALL.
14. CONNECT NEW 10"x10" EAD TO EXISTING EAD. RUN DUCT UTR TO EF
15. NEW SWS
16. NEW GRILLE
17. PROVIDE IRON ANGLE TAB 4"x4"x3/16" TO SECURE CU. SECURE ANGLE TAB TO CONCRETE PAD W/ 2 (TWO) 1/2"ø ANCHOR BOLTS (3" EMBED). SECURE UNIT TO ANGLE TAB W/ 2 (TWO) 3/8"ø SHEET METAL SCREWS. PROVIDE 6 TABS FOR CU/T3, 4 TABS FOR CU/T4
18. 24"x18"(L) SAD, RUN DUCT UP ALONG WALL INDICATED
19. 28"x18"(L) RAD, RUN DUCT UP ALONG WALL INDICATED

KEY PLAN

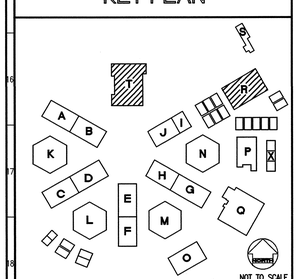

REVISED

IDENTIFICATION STAMP
DIV. OF THE STATE ARCHITECT
OFFICE OF REGULATION SERVICES
FILE NO. 19-H51
APPL. NO. 03-106434
AC. ____ FLS. W/ SS
DATE ____

MAY 12 2004

Dougherty + Dougherty
Architecture • Planning • Interior Design
3194-D Airport Loop Drive
Costa Mesa, CA 92626
(714) 427-0277

Copyright © 2002 Dougherty + Dougherty

FTA
831 S. Harbor Blvd.
Anaheim, CA 92805
Phone: (714) 772-9993
Fax: (714) 772-9998
Job Number: 22084

Architect Seal

Consultant Seal

LA MIRADA HIGH SCHOOL MODERNIZATION

NORWALK - LA MIRADA UNIFIED SCHOOL DISTRICT
13520 ADELFA DRIVE LA MIRADA, CA 90638

CLASSROOMS R & T MECHANICAL FLOOR PLANS

Date:	04-01-04
Job:	20237.50
Scale:	AS NOTED
Drawn:	
Revisions:	
1	12-01-03

M105

BUILDING R FLOOR PLAN — 2 — 1/8"=1'-0"

BUILDING T FLOOR PLAN — 1 — 1/8"=1'-0"

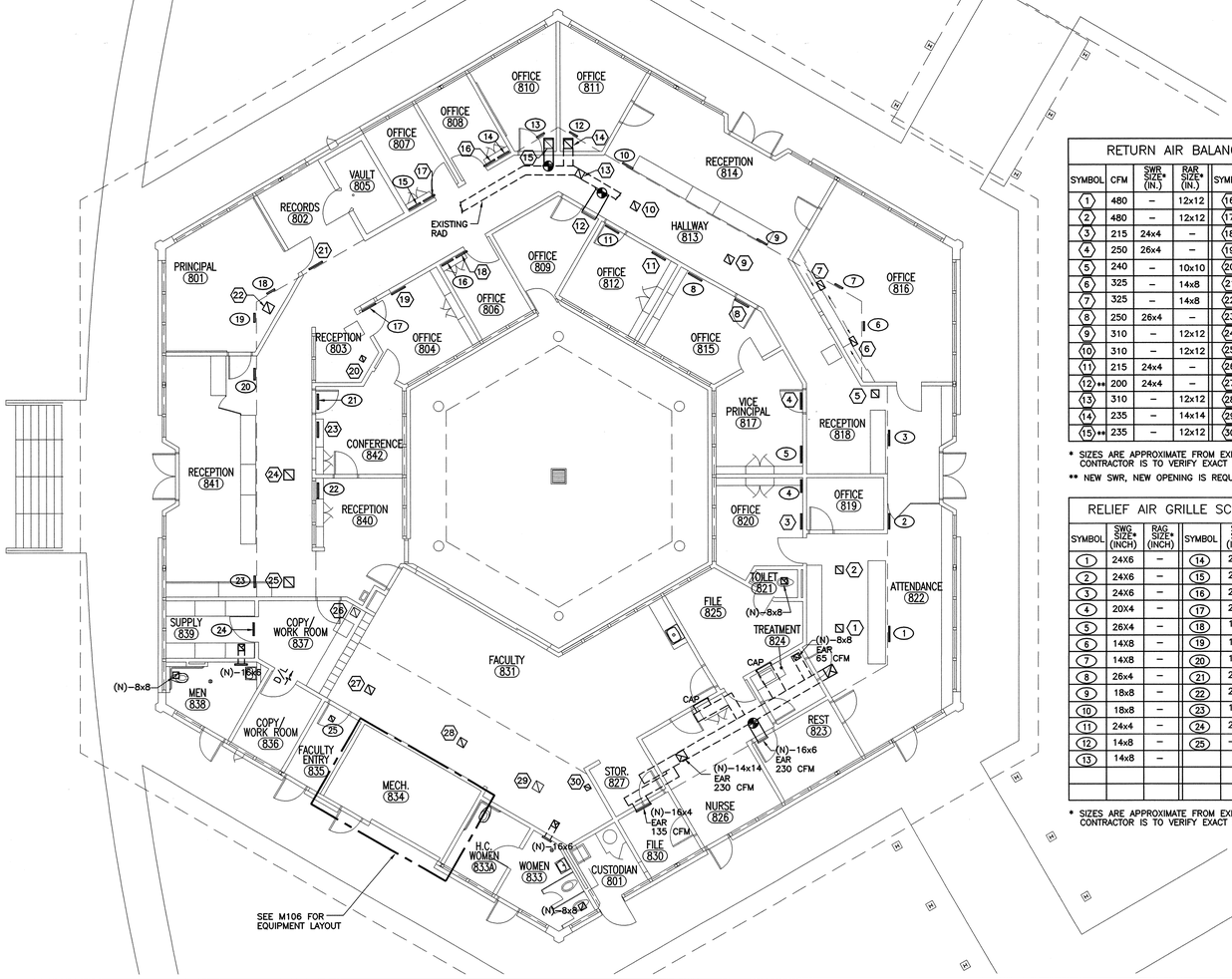

BUILDING K FLOOR PLAN

ADMINISTRATION BUILDING

1

1/8"=1'-0"

RETURN AIR BALANCE SCHEDULE

SYMBOL	CFM	SWR SIZE* (IN.)	RAR SIZE* (IN.)	SYMBOL	CFM	SWR SIZE* (IN.)	RAR SIZE* (IN.)
1	480	–	12x12	16	150	20x4	–
2	480	–	12x12	17	150	20x4	–
3	215	24x4	–	18	130	20x4	–
4	250	26x4	–	19	215	24x4	–
5	240	–	10x10	20	160	8x8	–
6	325	–	14x8	21	160	20x4	–
7	325	–	14x8	22	465	–	14x14
8	250	26x4	–	23	215	24x4	–
9	310	–	12x12	24	580	–	16x16
10	310	–	12x12	25	580	–	16x16
11	215	24x4	–	26**	400	–	12x12
12**	200	24x4	–	27	495	–	12x12
13	310	–	12x12	28	495	–	12x12
14	235	–	14x14	29**	595	–	14x14
15**	235	–	12x12	30	200	–	8x8

* SIZES ARE APPROXIMATE FROM EXISITNG CONDITIONS. CONTRACTOR IS TO VERIFY EXACT SIZES AT FIELD.

** NEW SWR, NEW OPENING IS REQUIRED.

RELIEF AIR GRILLE SCHEDULE

SYMBOL	SWG SIZE* (INCH)	RAG SIZE* (INCH)	SYMBOL	SWG SIZE* (INCH)	RAG SIZE* (INCH)
1	24X6	–	14	20x4	
2	24X6	–	15	20x4	
3	24X6	–	16	20x4	
4	20X4	–	17	24x4	
5	26X4	–	18	14x8	
6	14X8	–	19	14x8	
7	14X8	–	20	18x8	
8	26x4	–	21	24x4	
9	18x8	–	22	24x6	
10	18x8	–	23	18x8	
11	24x4	–	24	20x4	
12	14x8	–	25	–	8x8
13	14x8	–			

* SIZES ARE APPROXIMATE FROM EXISITNG CONDITIONS. CONTRACTOR IS TO VERIFY EXACT SIZES AT FIELD.

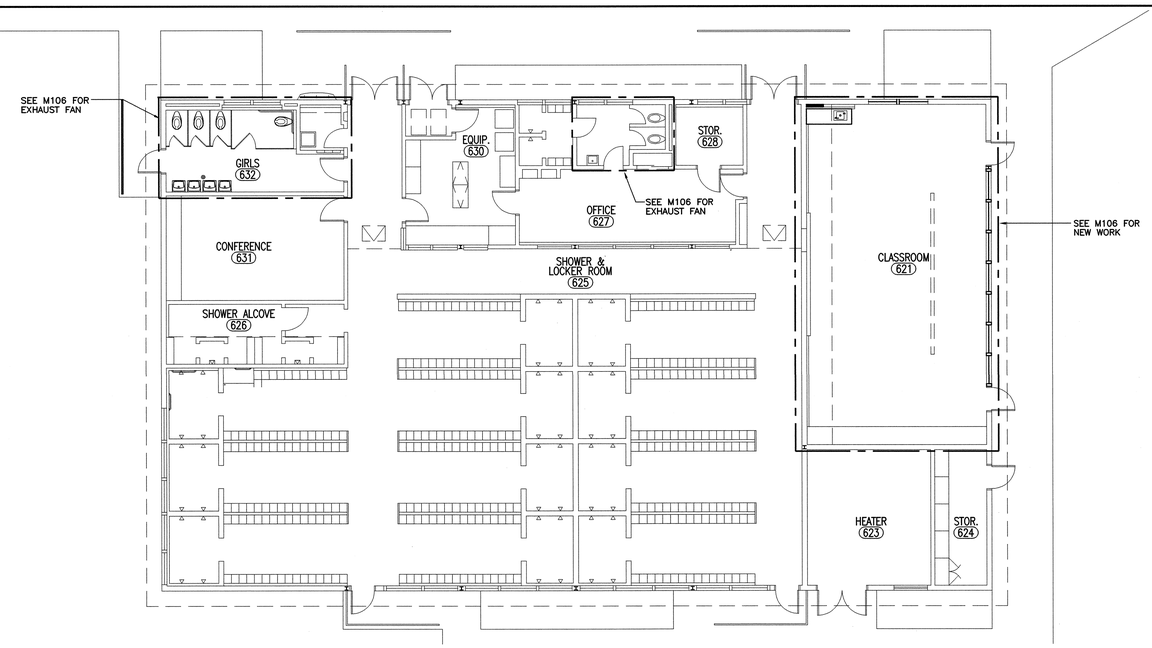

BUILDING O FLOOR PLAN

GIRLS LOCKER BUILDING

2

1/8"=1'-0"

CONSTRUCTION NOTES

KEY PLAN

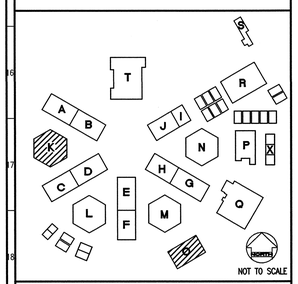

NOT TO SCALE

REVISED MAY 1 2 2004

IDENTIFICATION STAMP
DIV. OF THE STATE ARCHITECT
OFFICE OF REGULATION SERVICES
FILE NO. 19-H51
APPL. NO. 03-106434
AC.____ FLS. 1/1 SS.____
DATE____

Dougherty ■ Dougherty
Architecture · Planning · Interior Design
3194-D Airport Loop Drive
Costa Mesa, CA 92626
(714) 957-0977

Copyright © 2002 Dougherty + Dougherty

FTA
F.T. ARCHITECTS
831 S. Harbor Blvd.
Anaheim, CA 92805
Phone: (714) 772-2020
Fax: (714) 772-8789
Job Number: 22084

Architect Seal

Consultant Seal

LA MIRADA HIGH SCHOOL
MODERNIZATION
NORWALK - LA MIRADA UNIFIED SCHOOL DISTRICT
13520 ADELFA DRIVE LA MIRADA, CA 90638

CLASSROOMS K & O
MECHANICAL
FLOOR PLANS

Date:	04-01-04
Job:	20237.50
Scale:	1/8" = 1'
Drawn:	
Revisions:	
1	12-01-03

M106.1 1

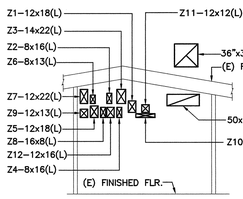

SECTION 1–1
SCALE: 1/8"=1'

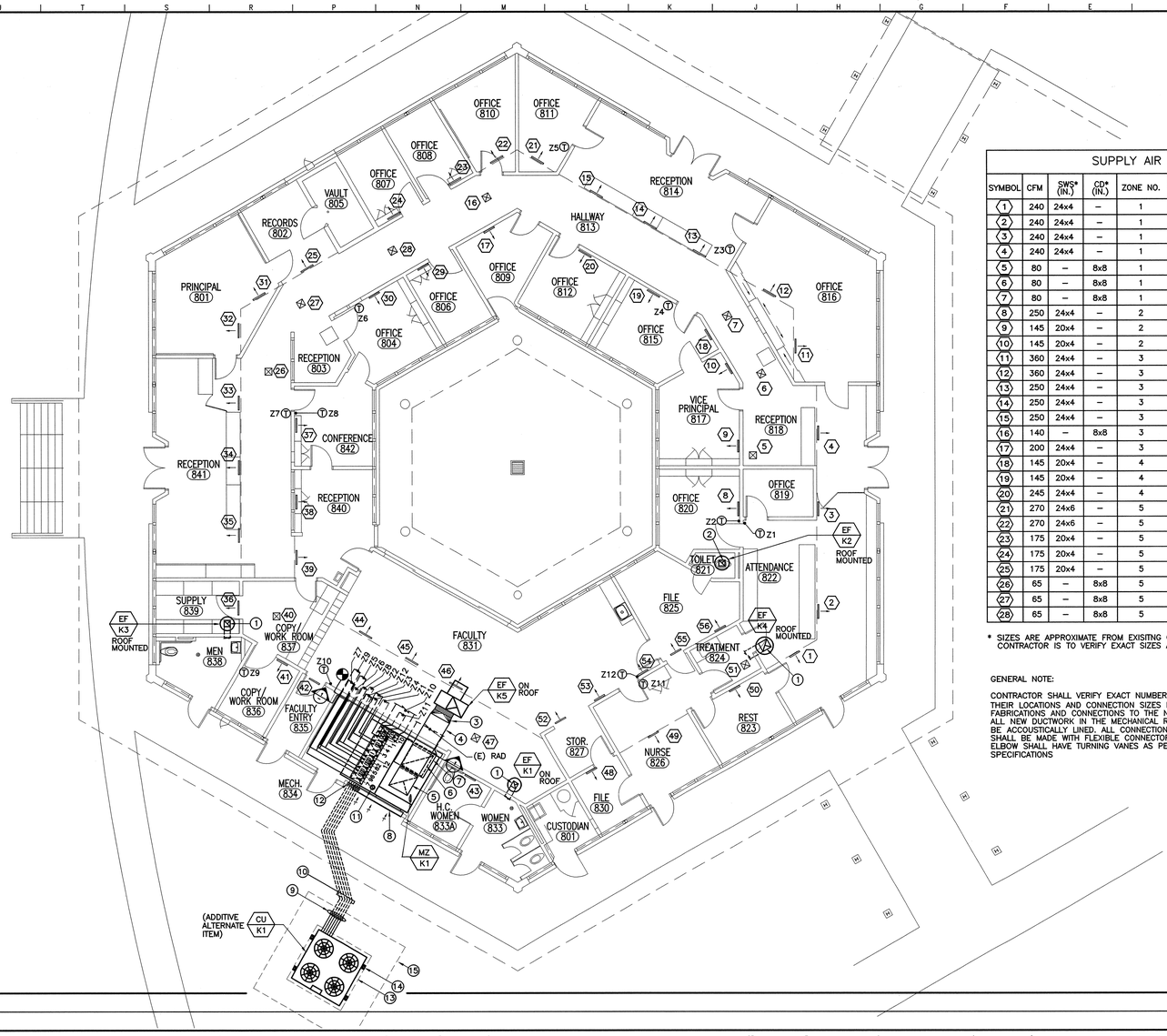

BUILDING K FLOOR PLAN

ADMINISTRATION BUILDING

1
1/8"=1'–0"

SUPPLY AIR BALANCE SCHEDULE

SYMBOL	CFM	SWS* (IN.)	CD* (IN.)	ZONE NO.	SYMBOL	CFM	SWS* (IN.)	CD* (IN.)	ZONE NO.
1	240	24x4	–	1	29	150	20x4	–	6
2	240	24x4	–	1	30	250	24x4	–	6
3	240	24x4	–	1	31	270	24x6	–	7
4	240	24x4	–	1	32	270	24x6	–	7
5	80	–	8x8	1	33	280	24x4	–	7
6	80	–	8x8	1	34	280	24x4	–	7
7	80	–	8x8	1	35	280	24x4	–	7
8	250	24x4	–	2	36	155	20x4	–	7
9	145	20x4	–	2	37	250	24x4	–	8
10	145	20x4	–	2	38	160	20x4	–	8
11	360	24x4	–	3	39	160	20x4	–	8
12	360	24x4	–	3	40	200	–	8x8	9
13	250	24x4	–	3	41	200	20x4	–	9
14	250	24x4	–	3	42	65	20x4	–	9
15	250	24x4	–	3	43	100	20x4	–	9
16	140	–	8x8	3	44	230	24x4	–	10
17	200	24x4	–	3	45	230	24x4	–	10
18	145	20x4	–	4	46	230	24x4	–	10
19	145	20x4	–	4	47	155	–	8x8	10
20	245	24x4	–	4	48	135	20x4	–	11
21	270	24x6	–	5	49	230	24x4	–	11
22	270	24x6	–	5	50	230	24x4	–	11
23	175	20x4	–	5	51	65	–	8x8	11
24	175	20x4	–	5	52	220	24x4	–	12
25	175	20x4	–	5	53	220	24x4	–	12
26	65	–	8x8	5	54	220	24x4	–	12
27	65	–	8x8	5	55	150	20x4	–	12
28	65	–	8x8	5	56	150	20x4	–	12

* SIZES ARE APPROXIMATE FROM EXISITNG CONDITIONS. CONTRACTOR IS TO VERIFY EXACT SIZES AT FIELD.

GENERAL NOTE:

CONTRACTOR SHALL VERIFY EXACT NUMBER OF ZONES, THEIR LOCATIONS AND CONNECTION SIZES PRIOR TO ANY FABRICATIONS AND CONNECTIONS TO THE NEW SYSTEM. ALL NEW DUCTWORK IN THE MECHANICAL ROOM SHALL BE ACCOUSTICALLY LINED. ALL CONNECTIONS TO NEW UNIT SHALL BE MADE WITH FLEXIBLE CONNECTORS. ALL 90° ELBOW SHALL HAVE TURNING VANES AS PER SPECIFICATIONS

ZONE INFORMATION

ZONE	CFM	CONNECTION SIZE (IN.)
1	1200	22x10
2	540	22x6
3	1810	22x14
4	535	22x6
5	1260	22x10
6	400	22x6
7	1535	22x12
8	570	22x6
9	565	22x6
10	845	22x10
11	660	22x8
12	950	22x10

CONTRACTOR SHALL VERIFY ALL DIMENSIONS PRIOR TO ANY FABRICATIONS AND INSTALLATIONS

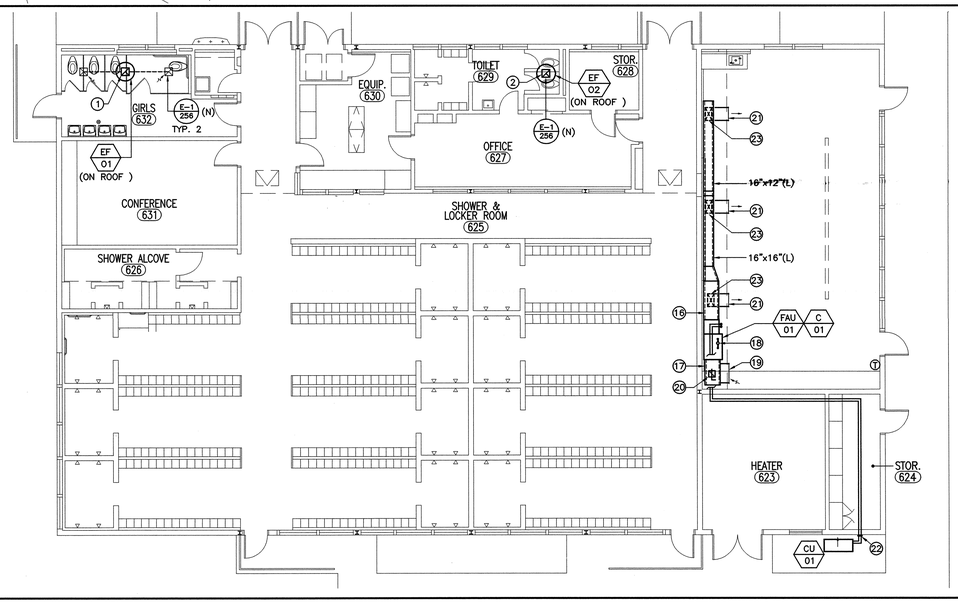

BUILDING O FLOOR PLAN

GIRLS LOCKER BUILDING

2
1/8"=1'–0"

CONSTRUCTION NOTES

(BUILDING K ONLY)

1. CONNECT NEW 10"x10" EAD TO EXISTING EAD. RUN DUCT UTR TO EF
2. CONNECT NEW 8"x8" EAD TO EXISTING EAD. RUN DUCT UTR TO EF
3. 32"ø EAD (ON ROOF) TRANSITION TO 36"x36"
4. EAD ON ROOF
5. 36"x36" EAD UTR
6. 40"x40" (L) RAD UP FROM UNIT AND CONNECT TO UNDERSIDE OF NEW LINED RAD. PROVIDE FLEXIBLE CONNECTOR BETWEEN MZ UNIT AND NEW DUCT (TYP. FOR ALL CONNECTIONS TO MZ UNIT).
7. NEW RAD, APPROXIMATE SIZE: 58"x18(L)
8. NEW 96"x78" SHEET METAL OSA PLENUM (ABOVE DOOR) CONNECT FULL SIZE (48"x30") OSA OPENING FROM UNIT TO OSA PLENUM
9. RUN REGRIGERANT PIPING DOWN UNDER GROUND FROM THIS POINT ON.
10. UNDERGROUND REFRIGERANT PIPING (LIQUID, VAPOR & HOT GAS BY–PASS). CONTRACTOR SHALL FOLLOW ALL ALL MANUFACTURER'S INSTRUCTIONS FOR UNDERGROUND PIPING AND HOT GAS BY–PASS CONNECTIONS.
11. 8"ø TYPE B FLUE UTR. PROVIDE TRANSITION FROM 6"ø CONNECTION AT UNIT
12. RUN REFRIGERANT PIPING UP AND CONNECT TO AIR HANDLER AS INDICATED
13. 6" HIGH CONCRETE PAD, SEE ARCH.
14. PROVIDE 4 (FOUR) IRON ANGLE TABS 4"x4"x3/16" TO SECURE CU. SECURE ANGLE TAB TO CONCRETE PAD W/ 2 (TWO) 1/2"ø ANCHOR BOLTS (3" EMBED). SECURE UNIT TO ANGLE TAB W/ 2 (TWO) 3/8"ø SHEET METAL SCREWS
15. EQUIPMENT ENCLOSURE. SEE ARCH.
16. LINED SUPPLY AIR PLENUM, SIZE TO MATCH OPENING @ COOLING COIL
17. LINED RETURN AIR PLENUM, SIZE TO MATCH OPENING @ FURNACE
18. CONNECT 2"ø COMBUSTION & 2"ø VENT PIPES TO 3–1/2"ø CONCENTRIC VENT & RUN VENT UTR. TERMINATE VENT 3' MIN. ABOVE OSA INTAKE DUCT
19. 36"x20" SWR, 1350 CFM
20. 10"x10" OSA DUCT UTR, SET @ 450 CFM. PROVIDE GOOSE NECK ON ROOF
21. 20"x10" SWS, 600 CFM. CENTER LINE @ 8'–6" ABOVE FINISHED FLOOR
22. RUN REFRIGERANT PIPING UP ALONG WALL AND THRU. TO COOLING COIL AS INDICATED. SEAL OPENING IN WALL WATER TIGHT
23. 20"x10" DUCT DN. FROM BOTTOM OF MAIN. PROVIDE 45° TAP.

KEY PLAN

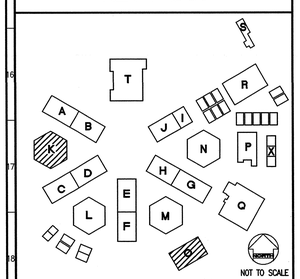

NOT TO SCALE

REVISED
MAY 12 2004
IDENTIFICATION STAMP
DIV. OF THE STATE ARCHITECT
OFFICE OF REGULATION SERVICES
FILE NO. 19–H51
APPL. NO. 03–105434
AC.____ FLS. NJ SS.____
DATE____

Dougherty ■ Dougherty
Architecture • Planning • Interior Design
3194-D Airport Loop Drive
Costa Mesa, CA 92626
(714) 432-0227 (714) 432-0228

Copyright © 2002 Dougherty + Dougherty

FTA
Fr. Andreoulakis
Facilities Engineer
831 S. Harbor Blvd.
Anaheim, CA 92805
Phone: (714) 772-8788
Fax: (714) 772-8789
Job Number: 22004

LICENSED ARCHITECT
No. C-8824
REGISTERED PROFESSIONAL ENGINEER
STATE OF CALIFORNIA
Architect Seal

PROFESSIONAL ENGINEER
REGISTERED
STATE OF CALIFORNIA
Consultant Seal

LA MIRADA HIGH SCHOOL MODERNIZATION

NORWALK - LA MIRADA UNIFIED SCHOOL DISTRICT
13520 ADELFA DRIVE LA MIRADA, CA 90638

CLASSROOMS K & O MECHANICAL FLOOR PLANS

Date:	04–01–04
Job:	20237.50
Scale:	1/8" = 1'
Drawn:	
Revisions:	
1	12–01–03

M106 1

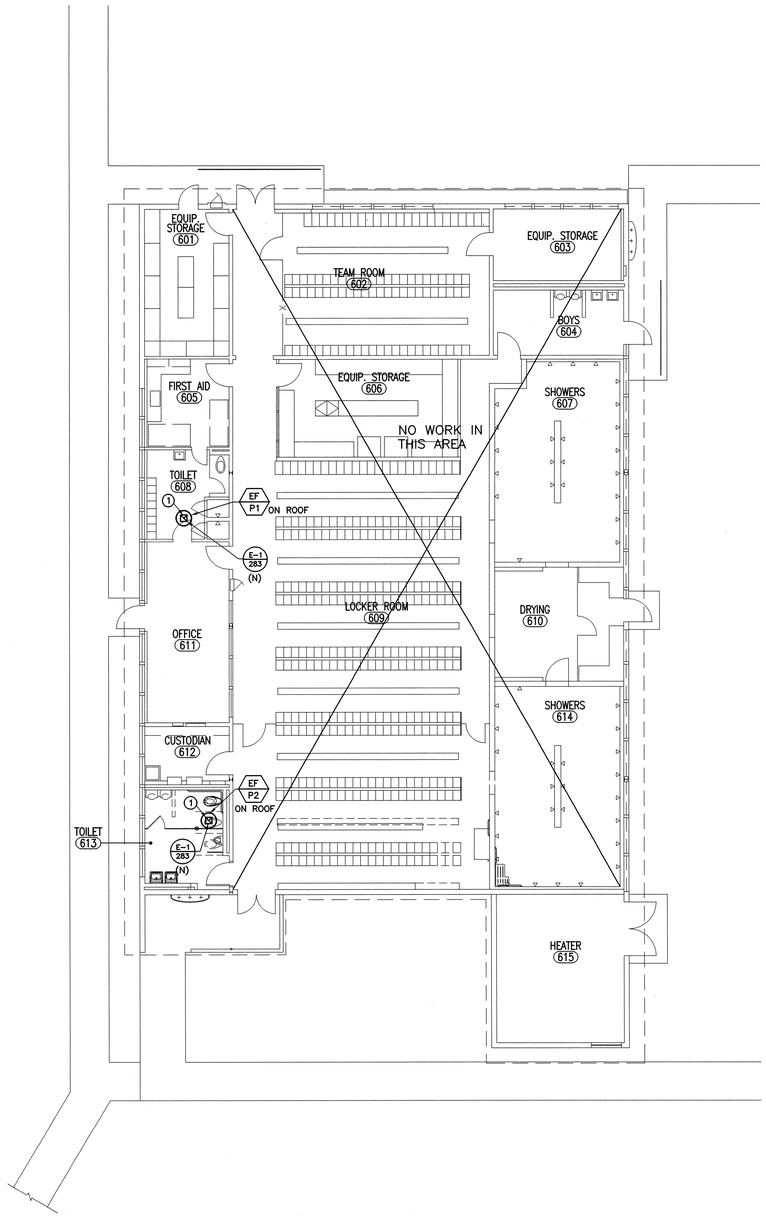

BUILDING P FLOOR PLAN

BOYS LOCKER ROOM BUILDING

2

1/8"=1'-0"

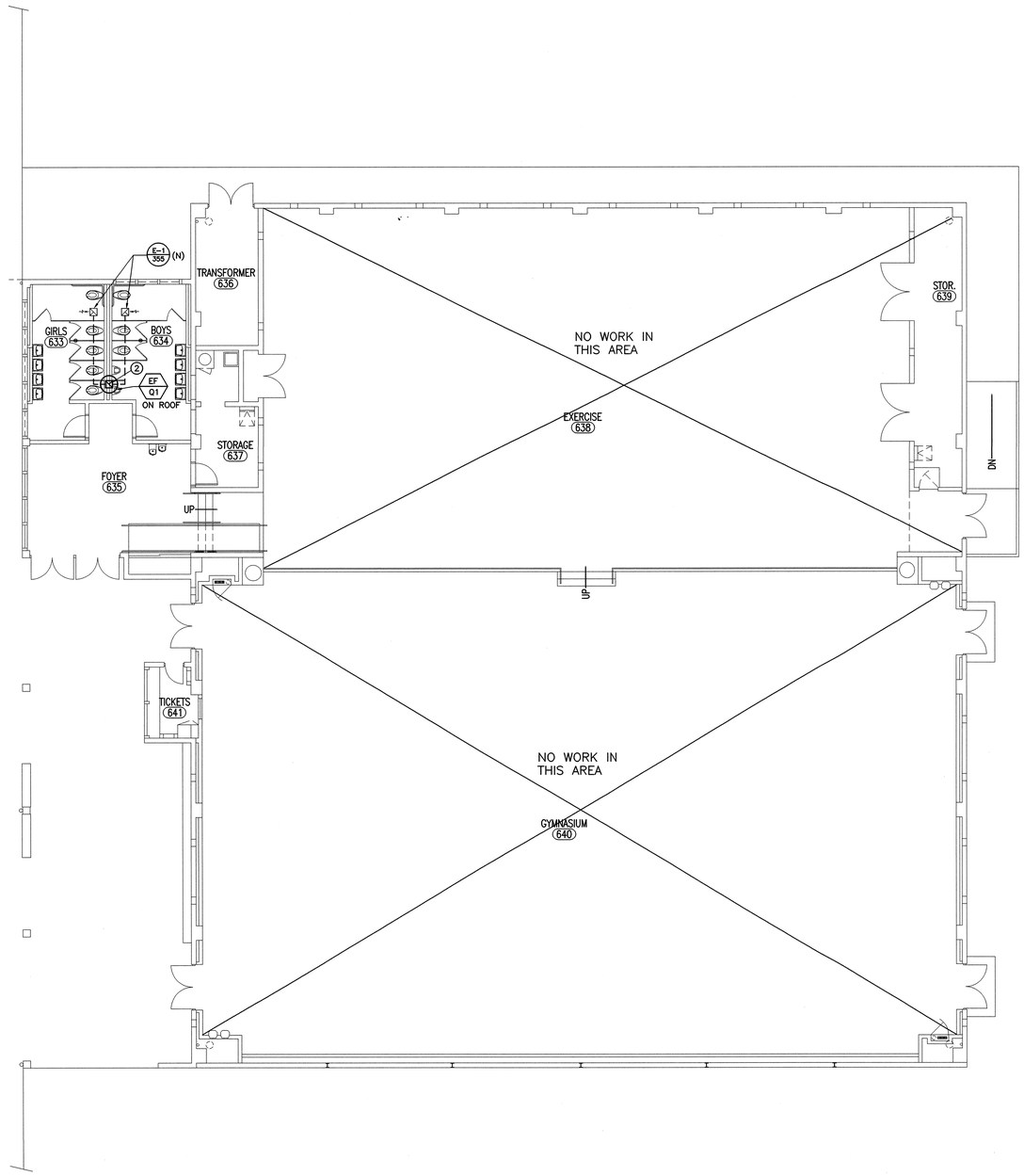

BUILDING Q FLOOR PLAN

GYMNASIUM BUILDING

1

1/8"=1'-0"

CONSTRUCTION NOTES

1. 10"x10" EAD UTR
2. CONNECT NEW 12"x12" EAD TO EXISTING EAD. RUN DUCT UTR TO EF

KEY PLAN

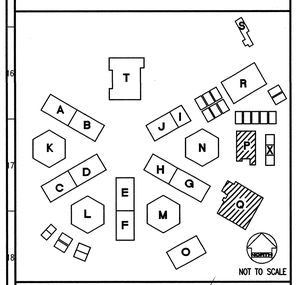

REVISED MAY 12 2004

IDENTIFICATION STAMP
DIV. OF THE STATE ARCHITECT
OFFICE OF REGULATION SERVICES

FILE NO. 19-H51
APPL. NO. 03-106434

AC.____ FLS. N1-1 SS.____

DATE____

Dougherty ■ Dougherty
Architecture · Planning · Interior Design
3194-D Airport Loop Drive
Costa Mesa, CA 92626
(714) 427-0277

Copyright © 2002 Dougherty + Dougherty

FTA
831 S. Harbor Blvd.
Anaheim, CA 92805
Phone: (714) 772-9780
Fax: (714) 772-9788
Job Number: 22604

Architect Seal

Consultant Seal

LA MIRADA HIGH SCHOOL MODERNIZATION

NORWALK - LA MIRADA UNIFIED SCHOOL DISTRICT
13520 ADELFA DRIVE LA MIRADA, CA 90638

CLASSROOMS P & Q MECHANICAL FLOOR PLANS

Date:	04-01-04
Job:	20237.50
Scale:	1/8" = 1'
Drawn:	
Revisions:	
1	12-01-03

M107 1

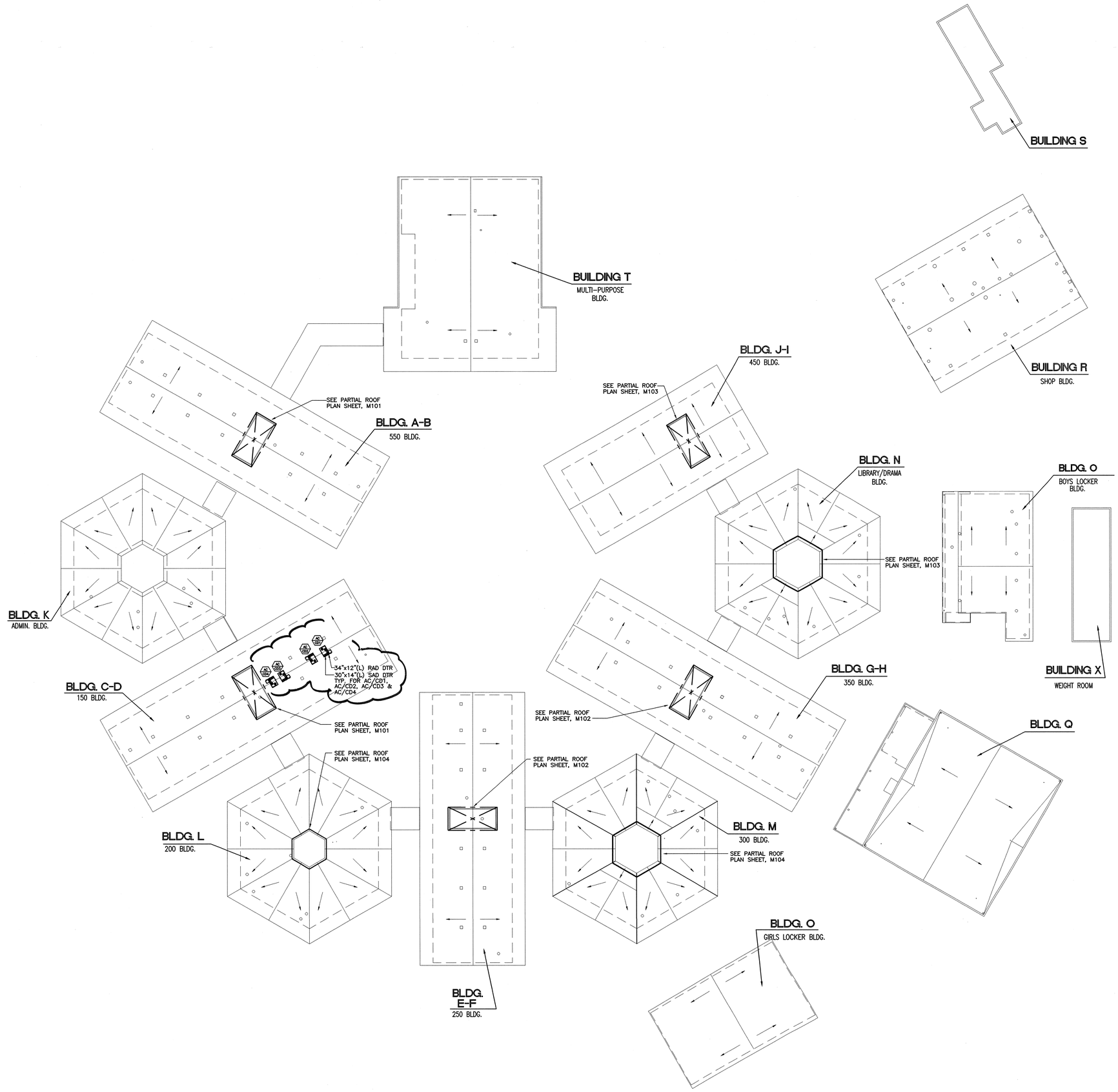

ROOF PLAN

1

1" = 30'

KEY PLAN

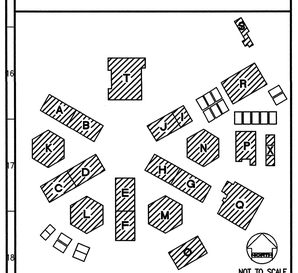

REVISED

IDENTIFICATION STAMP
DIV. OF THE STATE ARCHITECT
OFFICE OF REGULATION SERVICES

FILE NO. 19-H51
APPL. NO. 03-106434

AC._____ FLS._____ SS._____

DATE_____

MAY 12 2004

Dougherty + Dougherty
Architecture · Planning · Interior Design
3194-D Airport Loop Drive
Costa Mesa, CA 92626
(714) 427-0277

Copyright © 2002 Dougherty + Dougherty

FTA
F.T. ARCHITECTS
831 S. Harbor Blvd.
Anaheim, CA 92805
Phone: (714) 772-9783
Fax: (714) 772-9789
Job Number: 22004

Architect Seal

Consultant Seal

LA MIRADA HIGH SCHOOL
MODERNIZATION
NORWALK - LA MIRADA UNIFIED SCHOOL DISTRICT
13520 ADELFA DRIVE LA MIRADA, CA 90638

MECHANICAL
ROOF PLAN

Date:	04-01-04
Job:	20237.50
Scale:	1"=30'-0"
Drawn:	
Revisions:	

M109

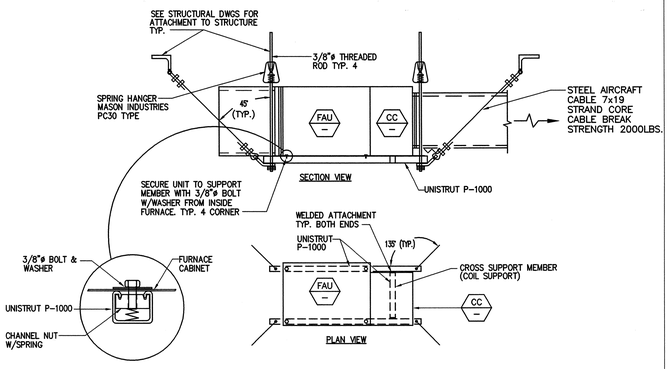

HORIZONTAL FURNACE SUSPENDED DETAIL — SCALE NONE — 3

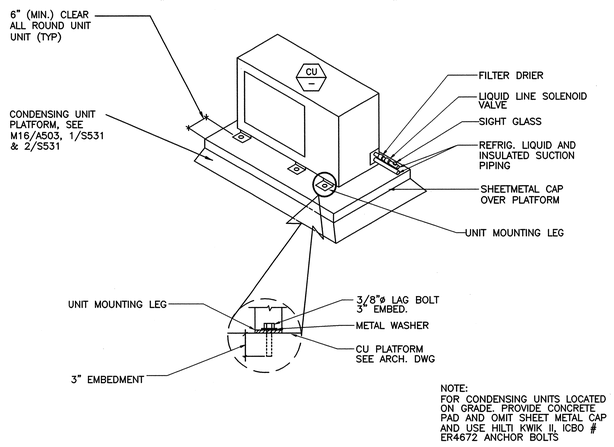

NOTE:
FOR CONDENSING UNITS LOCATED ON GRADE. PROVIDE CONCRETE PAD AND OMIT SHEET METAL CAP AND USE HILTI KWIK II, ICBO # ER4672 ANCHOR BOLTS

ROOF MOUNTED CONDENSING UNIT DETAIL — SCALE NONE — 2

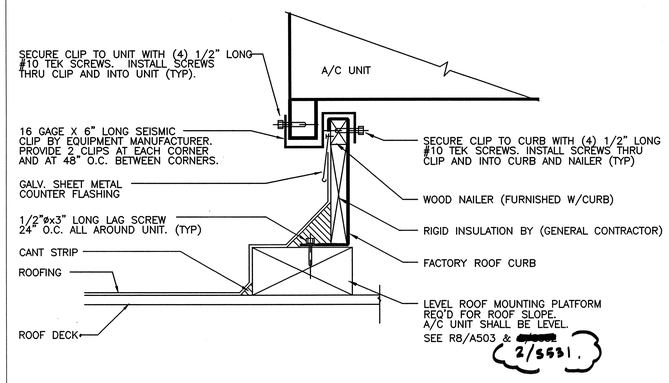

ROOF MOUNTED AC DETAIL — SCALE NONE — 1

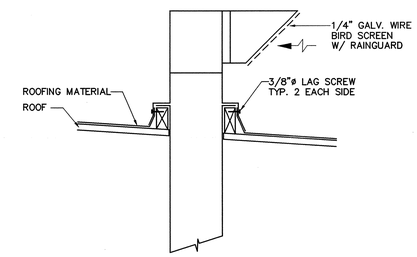

OSA DUCT THROUGH ROOF DETAIL — SCALE NONE — 6

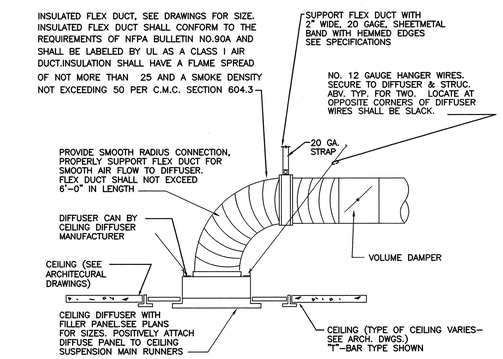

CEILING DIFFUSER DETAIL — SCALE NONE — 5

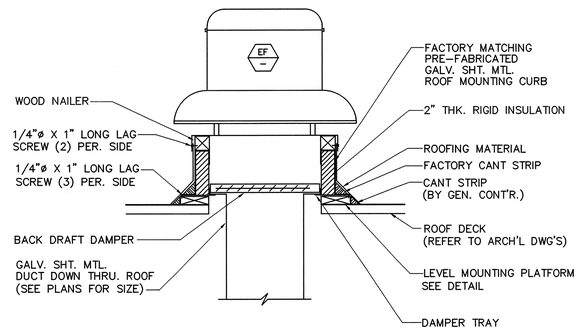

ROOF MOUNTED EXHAUST FAN DETAIL — SCALE NONE — 4

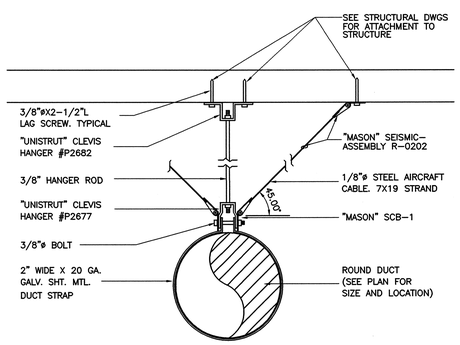

ROUND DUCT SUPPORT DETAIL — SCALE NONE — 8

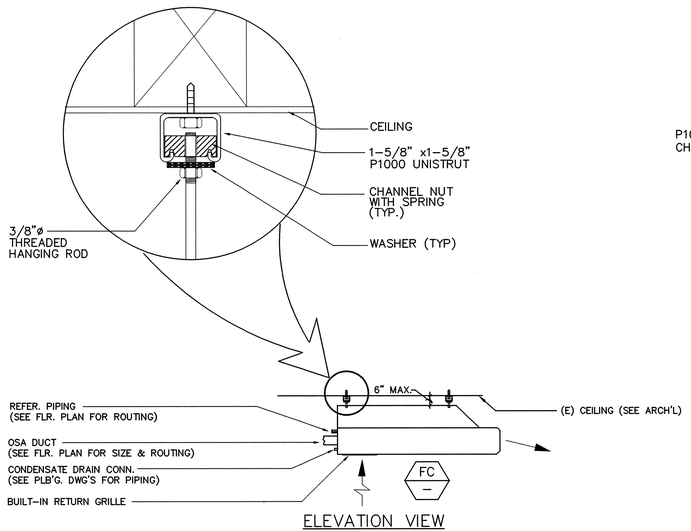

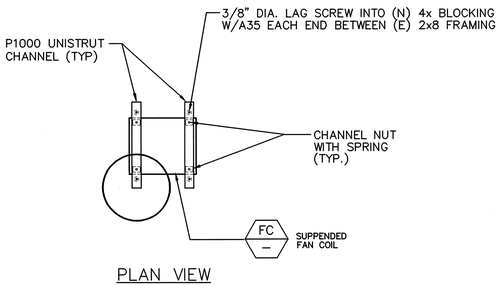

NOTE: MOUNT UNIT AS HIGH AS POSSIBLE UNDER EXISTING CEILING

SCALE NONE — 7

REVISED MAY 12 2004

IDENTIFICATION STAMP
DIV. OF THE STATE ARCHITECT
OFFICE OF REGULATION SERVICES
FILE NO. 19-H51
APPL. NO. 03-106434
AC.____ FLS. 1/2 SS.____
DATE ____

Dougherty + Dougherty
Architecture · Planning · Interior Design
3184-D Airport Loop Drive
Costa Mesa, CA 92626
(714) 427-0277

Copyright © 2002 Dougherty + Dougherty

FTA
Fire Technology
838 S. Hacienda Blvd.
Hacienda Heights, CA 91745
Phone (714) 772-8393
Fax (714) 772-8394
Job Number: 22084

Architect Seal

Consultant Seal

LA MIRADA HIGH SCHOOL MODERNIZATION
NORWALK - LA MIRADA UNIFIED SCHOOL DISTRICT
13520 ADELFA DRIVE LA MIRADA, CA 90638

MECHANICAL DETAILS

Date:	04-01-04
Job:	20237.50
Scale:	NONE
Drawn:	
Revisions:	

M201

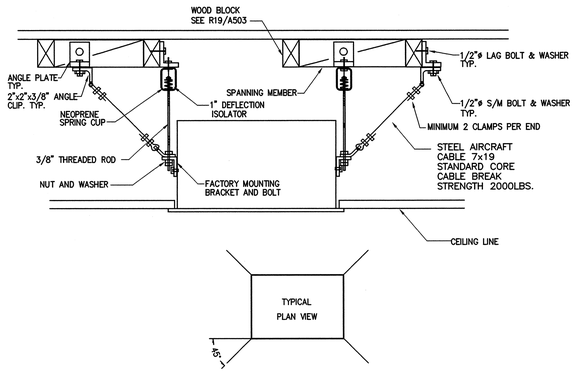

SUSPENDED FAN COIL DETAIL — SCALE NONE — 3

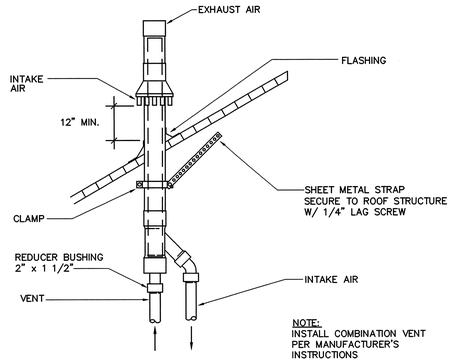

CONCENTRIC VENT–COMBUSTION DETAIL (FOR 58MXA FORCED AIR FURNACE) — SCALE NONE — 2

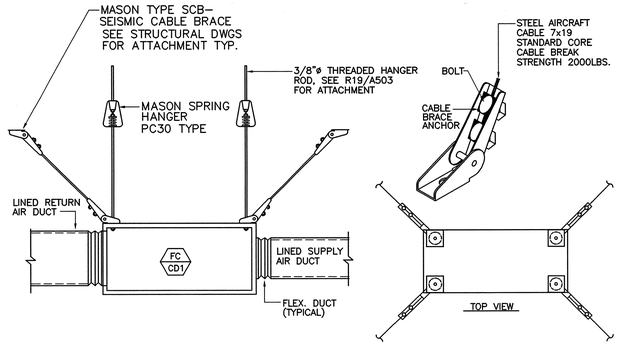

SUSPENDED FAN COIL DETAIL — SCALE NONE — 1

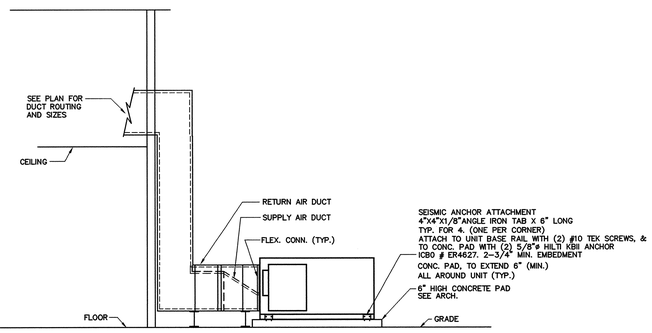

ON GRADE AC UNIT DETAIL — SCALE NONE — 6

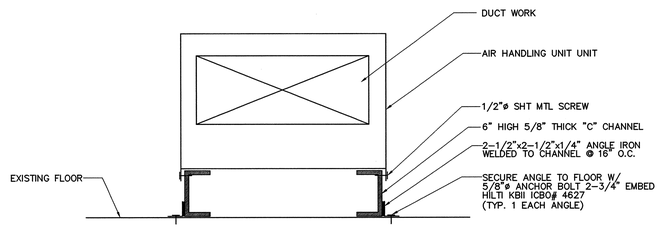

AIR HANDLING UNIT DETAIL — SCALE NONE — 5

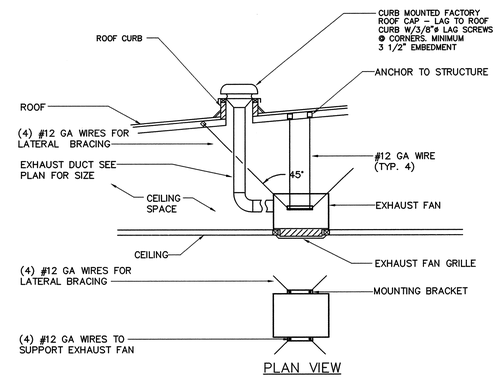

CEILING EXHAUST FAN DETAIL — SCALE NONE — 4

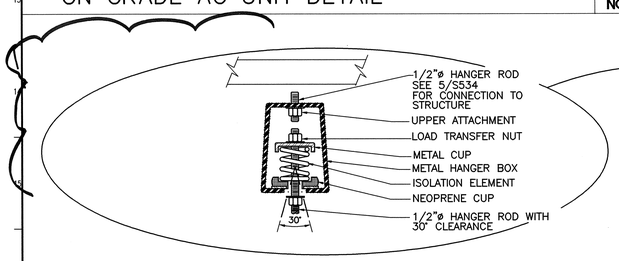

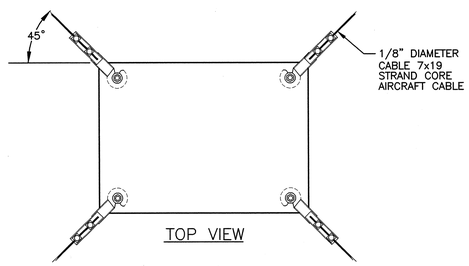

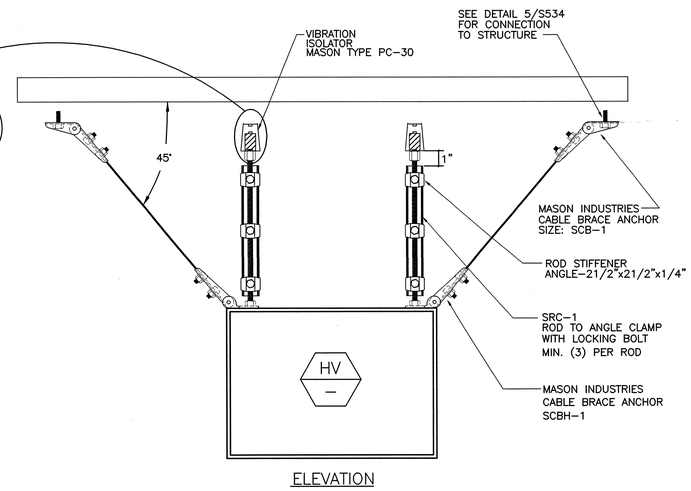

SUSPENDED HEAT/VENT UNIT DETAIL — SCALE NONE — 8

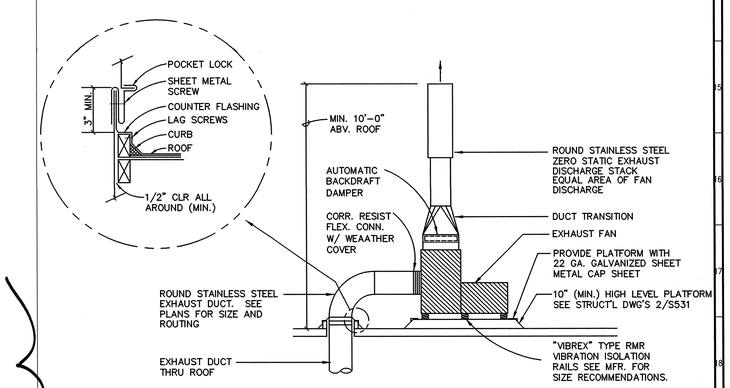

FUME HOOD EXHAUST FAN DETAIL — SCALE NONE — 7

REVISED MAY 1 2 2004

IDENTIFICATION STAMP
DIV. OF THE STATE ARCHITECT
OFFICE OF REGULATION SERVICES
FILE NO. 19–H51
APPL. NO. 03–106434
AC ____ FLS NC SS ____
DATE ____

Dougherty ■ Dougherty
Architecture • Planning • Interior Design
3536 Concours, Suite 100
Ontario, California 91764
(714) 427-0277

Copyright © 2002 Dougherty + Dougherty

FTA
Fire Technology
431 S. Harbor Blvd.
Anaheim, California 92805
Phone (714) 772-9293
Fax (714) 772-9296
Job Number: 22084

Consultant Seal

Architect Seal

LA MIRADA HIGH SCHOOL MODERNIZATION
NORWALK - LA MIRADA UNIFIED SCHOOL DISTRICT
13520 ADELFA DRIVE LA MIRADA, CA 90638

MECHANICAL DETAILS

Date:	04–01–04
Job:	20237.50
Scale:	NONE
Drawn:	
Revisions:	

M202

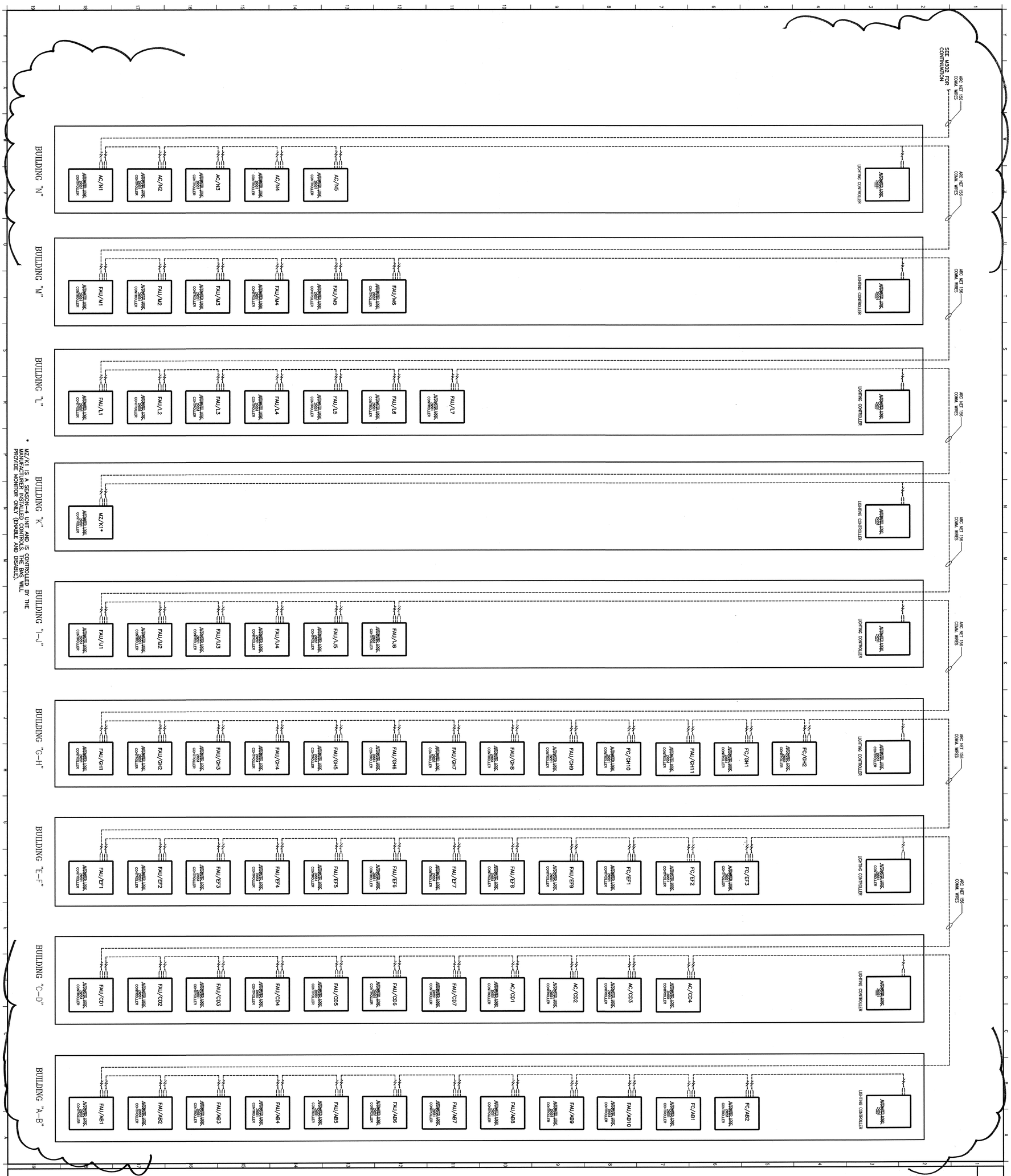

* MZ/K1 IS A SEASON-4 UNIT AND IS CONTROLLED BY THE MANUFACTURER INSTALLED CONTROLS. THE BMS WILL PROVIDE MONITOR ONLY (ENABLE AND DISABLE).

REVISED

IDENTIFICATION STAMP
DSA/SS/OFFICE OF REGULATION SERVICES
FILE NO. 19-H01
APPL. NO. 03-108434
AC ____
DATE 03-NOV-03

DSA APPROVED
NOV 12 2004

Date:	04-01-04
Job:	20237.50
Scale:	NONE
Drawn:	
Revisions:	

M301

MECHANICAL
CONTROL WIRING
SCHEMATICS

LA MIRADA HIGH SCHOOL MODERNIZATION

NORWALK - LA MIRADA UNIFIED SCHOOL DISTRICT
13520 ADELFA DRIVE LA MIRADA, CA 90638

REGISTERED PROFESSIONAL ENGINEER
TIMOTHY CRANSTON
No. 34061
Exp. 12/31/05
MECHANICAL
STATE OF CALIFORNIA

Consultant Seal

LICENSED ARCHITECT
JOHN PAUL DOUGHERTY
NO. C-9824
EXP. JULY 31, 2004
STATE OF CALIFORNIA

Architect Seal

FTA
F.T. Andrews, Inc.
Consulting Engineers
831 S. Harbor Blvd.
Anaheim, CA 92805
Phone: (714) 772-9193
Fax: (714) 772-2759
Job Number: 22084

Dougherty ■ Dougherty
Architecture · Planning · Interior Design
3194-D Airport Loop Drive
Costa Mesa, CA 92626
(714) 427- 0277

Copyright © 2002 Dougherty + Dougherty

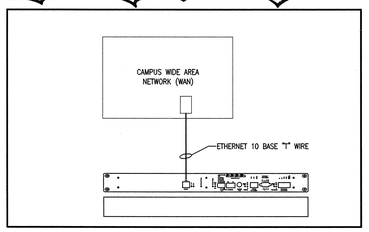

EXISTING SERVER @ DISTRICT OFFICE

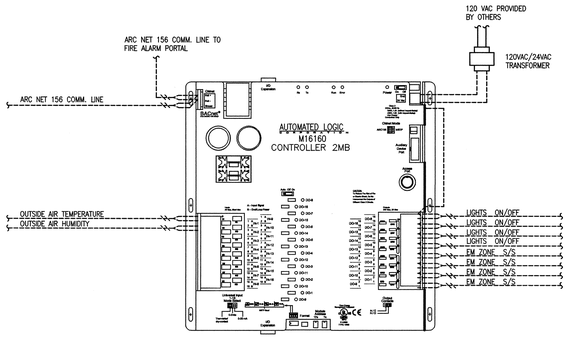

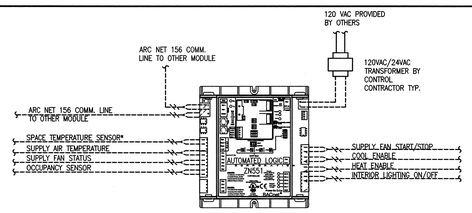

TYPICAL FOR FORCED AIR UNIT ROOF MOUNTED PACKAGED A/C UNIT & AIR HANDLING UNIT

* SPACE TEMPERTURE SENSOR WITH PUSH BUTTON OVERRIDE AND ADJUSTABLE SET POINT.

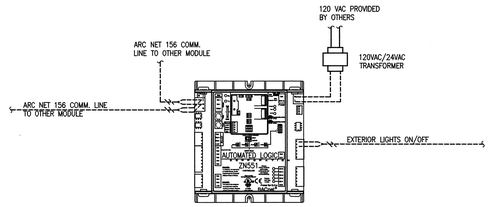

LIGHTING CONTROLLER

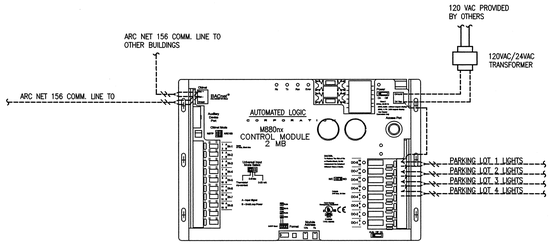

LIGHTING CONTROLLER

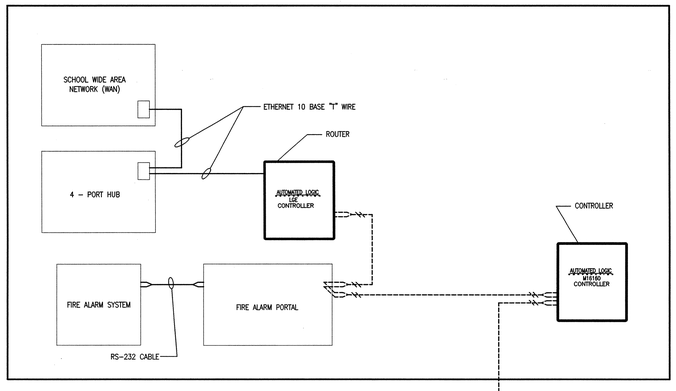

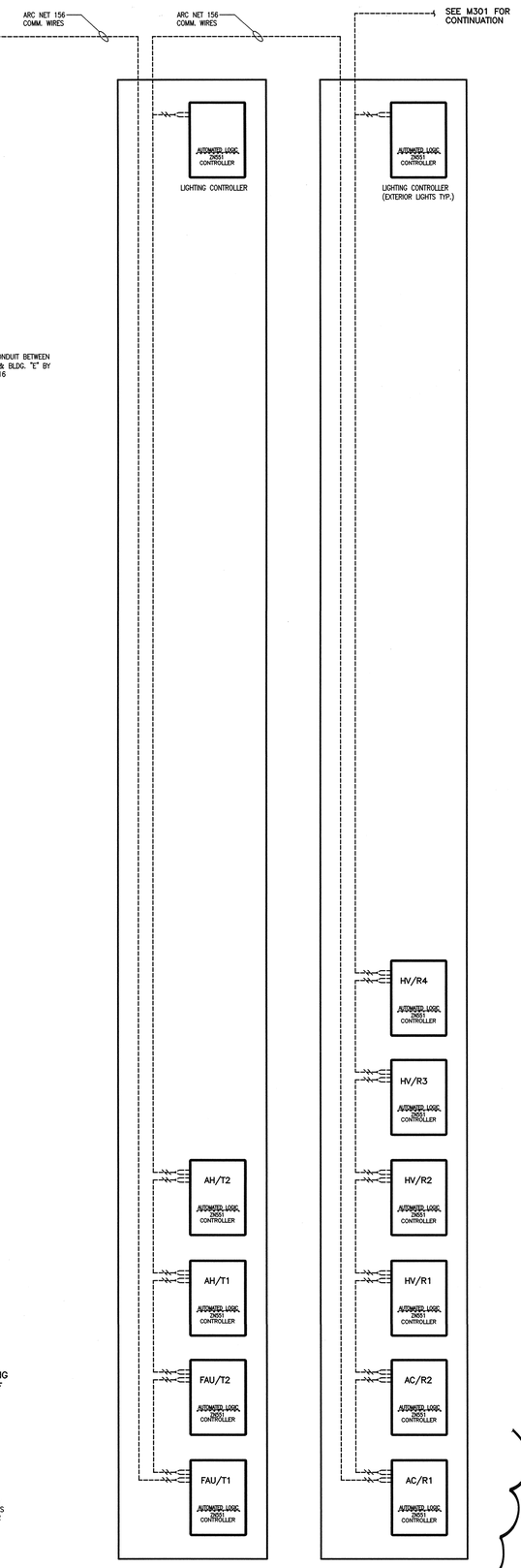

BUILDING "T"

BUILDING "R"

TYPICAL SEQUENCE OF OPERATION FOR FORCED AIR UNIT (FAU), ROOF MOUNTED A/C UNIT (AC) AND AIR HANDLING UNIT (AH)

Zone Control
All setpoints are adjustable by the operator.
1) When the zone becomes occupied the Forced Air Unit (FAU) or roof Mounted Package A/C unit (AC) or air handling unit (AH) will run to provide minimum ventilation.
a) When the zone temperature is between the occupied cooling setpoint (74°F) and the occupied heating setpoint (70°F), the FAU/AC/AH will provide no mechanical heating or cooling.
b) Zone occupants will be able to set a timed local override in 60 minute increments, up to 240 minutes. While timed local override is active, the FAU/AC/AH will operate in the occupied mode.
2) When the zone is unoccupied, the controller will raise the zone temperature cooling setpoint to 85°F and drop the zone temperature heating setpoint to 65°F. As long as the zone temperature remains between the unoccupied cooling and heating setpoints, the FAU/AC/AH will not run.
3) The occupant will be able to adjust the zone temperature heating and cooling setpoints locally by 2°F (Logistat Plus and Pro Models only).
4) The controller will generate an alarm if the zone temperature remains 4°F higher than its heating setpoint for 5 minutes. This alarm will not be enabled until the zone has been running for 30 minutes.
5) The controller will generate an alarm if the zone temperature remains 4°F lower than its heating setpoint for 5 minutes. This alarm will not be enabled until the zone has been running for 30 minutes.
6) The controller will generate an alarm if the discharge air temperature remains higher than 120°F for 5 minutes. This alarm will not be enabled until the zone has been running for 30 minutes.
7) The controller will generate an alarm if the discharge air temperature remains lower than 45°F for 5 minutes. This alarm will not be enabled until the zone has been running for 30 minutes.

Optimal Start Mode
1) The zone will calculate how long it will take to return from its unoccupied state to its occupied setpoint based on the heating or cooling capacity and the outside air temperature. The zone will then adjust its effective setpoint at the time necessary in order to ensure the desired zone conditions at occupancy.
2) The system will not start more than 4 hours before a scheduled occupancy.

Fan Control
1) The controller will send a run signal to the fan if the FAU/AC/AH is called to run.
a) When called to run, the fan will run for a minimum of 5 minutes.
b) When the fan cycles off, it will remain off for a minimum of 5 minutes.
2) If the supply fan proof indicates that the signal to the fan and the feedback from the fan have not matched for at least 30 seconds (feedback delay), the FAU/AC/AH controller will generate an alarm.
a) When the run signal is on and the status signal has indicated that the fan is running for 5 seconds, the controller will indicate that the fan has flow.
b) If the run signal commands the fan on and the status indicates that it is off, the controller will generate a supply fan fail alarm.
c) The FAU/AC/AH controller will generate a hand operation alarm if the run signal commands the fan off and the fan feedback continues to indicate that the fan is running after the feedback delay.
d) The controller will require that both the signal and feedback indicate that the supply fan is operating normally for 10 seconds (debounce time) before clearing an alarm.

Heating Control
1) If the outside air temperature is less than 65°F with a 2°F hysteresis and the outside air temperature is valid, the FAU/AC/AH controller will enable heating.
2) If the outside air temperature reading is not valid, the FAU/AC/AH controller will still enable heating.
a) The user will be able to disable heating if the outside air temperature reading is not valid.
3) When zone temperature falls below its heating setpoint, heating is enabled, and the FAU/AC/AH has flow a heating PID algorithm will modulate the heating percent output and call for gas heat to maintain the zone temperature at the zone temperature setpoint.
a) The user will be able to adjust the heating loop gain.
b) If the heating output signal is greater than 30% with a 20% hysteresis, the zone will activate electric heat.
c) When heating is called to run, it will run for at least 1 minute.
d) When heating cycles off, it will remain off for at least 1 minute.
4) The user will be able to lock the heating output signal and enter dates and times to enable and disable this lock.
5) If the FAU/AC/AH loses flow, the FAU/AC/AH controller will turn off gas heat.

Cooling Control
1) If the outside air temperature is greater than 60°F with a 2°F hysteresis and the outside air temperature is valid, the FAU/AC/AH controller will enable cooling.
2) If the outside air temperature reading is not valid, the FAU/AC/AH controller will still enable cooling.
a) The user will be able to disable cooling if the outside air temperature reading is not valid.
3) When zone temperature rises above its cooling setpoint, cooling is enabled, and the FAU/AC/AH has flow a cooling PID algorithm will modulate the cooling percent output and call for DX cooling to maintain the zone temperature at the zone temperature setpoint.
a) The user will be able to adjust the cooling loop gain.
b) If the cooling output signal is greater than 30% with a 20% hysteresis, the zone will activate DX cooling.
c) When cooling is called to run, it will run for at least 5 minutes.
d) When cooling cycles off, it will remain off for at least 5 minutes.
4) The user will be able to lock the cooling output signal and enter dates and times to enable and disable this lock.
5) If the FAU/AC/AH loses flow, the FAU/AC/AH controller will turn off DX cooling.

Lighting Control
1) When occupancy sensor detects no one in the area for 15 minutes, all lights will turn off.
2) When lighting level is above foot–candle setpoint, light sensor will turn off 1/2 lighting.
3) During unoccupied mode, occupancy sensor will turn on lights and alarms.

ELECTRICAL NOTES

1. WIRING AND INSTALLATION SHALL CONFORM TO ALL GOVERNING CODES.
2. (E) INDICATES ITEMS FURNISHED BY ELECTRICAL CONTRACTOR.
3. (M) INDICATES ITEMS FURNISHED BY MECHANICAL CONTRACTOR.
4. (BAS) INDICATES ITEMS FURNISHED BY BUILDING AUTOMATION SYSTEM CONTRACTOR.
5. ——— INDICATES LINE VOLTAGE WIRING BY ELECTRICAL CONTRACTOR.
6. - - - - - - INDICATES LOW VOLTAGE WIRING BY BUILDING AUTOMATION SYSTEM CONTRACTOR.
7. ALL COPPER AND/OR ALUMINUM CONDUCTOR CONNECTIONS SHALL BE MADE AS PRESCRIBED BY ESTABLISHED ELECTRICAL INDUSTRY AND ENGINEERING STANDARDS. EXTREME CARE MUST BE TAKEN WHEN CONNECTIONS INVOLVE DISSIMILAR MATERIALS.
8. FROM 2001 UMC, SEC 309: ELECTRICAL CONNECTIONS

   EQUIPMENT REGULATED BY THIS CODE REQUIRING ELECTRICAL CONNECTIONS OF MORE THAN FIFTY (50) VOLTS SHALL HAVE A POSITIVE MEANS OF DISCONNECT ADJACENT TO AND IN SIGHT FROM THE EQUIPMENT SERVED. A 120–VOLT RECEPTACLE SHALL BE LOCATED WITHIN TWENTY–FIVE (25) FEET (7620 MM) OF THE EQUIPMENT FOR SERVICE AND MAINTENANCE PURPOSES. THE RECEPTACLE NEED NOT BE LOCATED ON THE SAME LEVEL AS THE EQUIPMENT. LOW VOLTAGE WIRING OF FIFTY (50) VOLTS OR LESS WITHIN A STRUCTURE SHALL BE INSTALLED IN A MANNER TO PREVENT PHYSICAL DAMAGE.
9. VERIFY NUMBER OF LOW VOLTAGE WIRES WITH EQUIPMENT MANUFACTURER PRIOR TO INSTALLATION OF TEMPERATURE CONTROL SYSTEM.

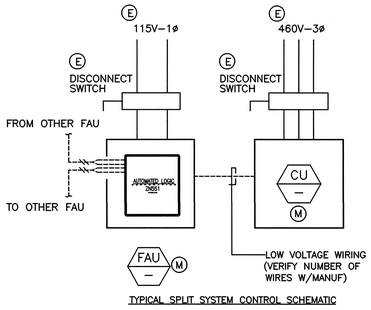

TYPICAL SPLIT SYSTEM CONTROL SCHEMATIC

NOTE: ALL CONDUITS FROM BUILDING TO BUILDING ARE BY ELECTRICAL CONTRACTOR. WIRES ARE BY CONTROL CONTRACTOR

REVISED MAY 1 2 2004

IDENTIFICATION STAMP
DIV. OF THE STATE ARCHITECT
OFFICE OF REGULATION SERVICES
FILE NO. 19–H51
APPL. NO. 03–106434
AC. ____ FLS. NOT SS. ____
DATE ____

Dougherty + Dougherty
Architecture • Planning • Interior Design
3194-D Airport Loop Drive
Costa Mesa, CA 92626
(714) 425-0277
(714) 427-7127

Copyright © 2002 Dougherty + Dougherty

FTA
F.T. Architects
831 S. Harbor Blvd.
Anaheim, CA 92805
Phone: (714) 772-8289
Fax: (714) 772-8789
Job Number: 22004

Architect Seal

Consultant Seal

LA MIRADA HIGH SCHOOL
MODERNIZATION
NORWALK - LA MIRADA UNIFIED SCHOOL DISTRICT
13520 ADELFA DRIVE LA MIRADA, CA 90638

MECHANICAL
CONTROL WIRING
SCHEMATICS

Date:	04–01–04
Job:	20237.50
Scale:	NONE
Drawn:	
Revisions:	

M302

CERTIFICATE OF COMPLIANCE (Part 1 of 2) MECH-1

PROJECT NAME	LA MIRADA HIGH SCHOOL	DATE	1–30–03
PROJECT ADDRESS	1352 ADELFA AVE. LA MIRADA, CA 90638		
PRINCIPAL DESIGNER–MECHANICAL	F.T. ANDREWS, INC.	TELEPHONE (714) 722–9193	Building Permit #
DOCUMENTATION AUTHOR	KEVIN PHAM	TELEPHONE (714) 722–9193	Checked by/Date Enforcement Agency Use

GENERAL INFORMATION

DATE OF PLANS 1–30–03 | BUILDING CONDITIONED FLOOR AREA BUILDING A–B, 10,840 SQ. FT.

BUILDING TYPE ☒ NONRESIDENTIAL ☐ HIGH RISE RESIDENTIAL ☐ HOTEL/MOTEL GUEST ROOM

PHASE OF CONSTRUCTION ☐ NEW CONSTRUCTION ☐ ADDITION ☒ ALTERATION ☐ UNCONDITIONED (No efficiency)

METHOD OF MECHANICAL COMPLIANCE ☐ PRESCRIPTIVE ☒ PERFORMANCE

PROOF OF ENVELOPE COMPLIANCE ☒ PREVIOUS ENVELOPE PERMIT ☐ ENVELOPE COMPLIANCE ATTACHED

STATEMENT OF COMPLIANCE

This Certificate of Compliance lists the building features and performance specifications need to comply with Title 24, Parts 1 and 6 of the California Code of Regulations. This certificate applies only to building mechanical requirements.

The documentation preparer hereby certifies that the documentation is accurate and complete.

DOCUMENTATION AUTHOR	SIGNATURE	DATE
KEVIN PHAM		1–30–03

The Principal Mechanical Designer hereby certifies that the proposed building design represented in this set of construction documents is consistent with the other compliance forms and worksheets, with the specifications, and with any other calculations submitted with this permit application. The proposed building has been designed to meet the mechanical requirements contained in the applicable parts of sections 110 through 115, 120 through 124, 140 through 142, 144 and 145.

Please check one:

☒ I hereby affirm that I am eligible under the provisions of Division 3 of the Business and Professions Code to sign this document as the person responsible for its preparation; and that I am licensed in the State of California as a civil engineer or mechanical engineer, or I am a licensed architect.

☐ I affirm that I am eligible under the exemption to Division 3 of the Business and Professions Code by section 5537.2 or 6737.3 to sign this document as the person responsible for its preparation; and that I am a licensed contractor performing this work.

☐ I affirm that I am eligible under the exemption to Division 3 of the Business and Professions Code to sign this document because it pertains to a structure or type of work described pursuant to Business and Professions Code Sections 5537, 5538 and 6737.1.

(These sections of the Business and Professions Code are printed in full in the Nonresidential Manual.)

PRINCIPAL MECHANICAL DESIGNER–NAME	SIGNATURE	DATE	LIC. #
IVAN RAY CRANSTON JR.		1–30–03	M14001

MECHANICAL MANDATORY MEASURES

Indicate location on plans of Note Block for Mandatory Measures SHEET : M401

INSTRUCTIONS TO APPLICANT

For Detailed instructions on the use of this and all Energy Efficiency Standards compliance forms, please refer to the Nonresidential Manual published by the California Energy Commission.

MECH-1: Required on plans for all submittals. Part 2 may be incorporated in schedules on plans.
MECH-2: Required for all submittals, but may be incorporated in schedules on plans.
MECH-3: Required for all submittals unless required ventilation rates and airflows are shown on plans, see 4.3.4.
MECH-4: Required for all perscriptive submittlas.

Nonresidential Compliance Forms *March 2000A*

CERTIFICATE OF COMPLIANCE (Part 1 of 2) MECH-1

PROJECT NAME	LA MIRADA HIGH SCHOOL	DATE	1–30–03
PROJECT ADDRESS	1352 ADELFA AVE. LA MIRADA, CA 90638		
PRINCIPAL DESIGNER–MECHANICAL	F.T. ANDREWS, INC.	TELEPHONE (714) 722–9193	Building Permit #
DOCUMENTATION AUTHOR	KEVIN PHAM	TELEPHONE (714) 722–9193	Checked by/Date Enforcement Agency Use

GENERAL INFORMATION

DATE OF PLANS 1–30–03 | BUILDING CONDITIONED FLOOR AREA BUILDING C–D, 11,679 SQ. FT.

BUILDING TYPE ☒ NONRESIDENTIAL ☐ HIGH RISE RESIDENTIAL ☐ HOTEL/MOTEL GUEST ROOM

PHASE OF CONSTRUCTION ☐ NEW CONSTRUCTION ☐ ADDITION ☒ ALTERATION ☐ UNCONDITIONED (No efficiency)

METHOD OF MECHANICAL COMPLIANCE ☐ PRESCRIPTIVE ☒ PERFORMANCE

PROOF OF ENVELOPE COMPLIANCE ☒ PREVIOUS ENVELOPE PERMIT ☐ ENVELOPE COMPLIANCE ATTACHED

STATEMENT OF COMPLIANCE

This Certificate of Compliance lists the building features and performance specifications need to comply with Title 24, Parts 1 and 6 of the California Code of Regulations. This certificate applies only to building mechanical requirements.

The documentation preparer hereby certifies that the documentation is accurate and complete.

DOCUMENTATION AUTHOR	SIGNATURE	DATE
KEVIN PHAM		1–30–03

The Principal Mechanical Designer hereby certifies that the proposed building design represented in this set of construction documents is consistent with the other compliance forms and worksheets, with the specifications, and with any other calculations submitted with this permit application. The proposed building has been designed to meet the mechanical requirements contained in the applicable parts of sections 110 through 115, 120 through 124, 140 through 142, 144 and 145.

Please check one:

☒ I hereby affirm that I am eligible under the provisions of Division 3 of the Business and Professions Code to sign this document as the person responsible for its preparation; and that I am licensed in the State of California as a civil engineer or mechanical engineer, or I am a licensed architect.

☐ I affirm that I am eligible under the exemption to Division 3 of the Business and Professions Code by section 5537.2 or 6737.3 to sign this document as the person responsible for its preparation; and that I am a licensed contractor performing this work.

☐ I affirm that I am eligible under the exemption to Division 3 of the Business and Professions Code to sign this document because it pertains to a structure or type of work described pursuant to Business and Professions Code Sections 5537, 5538 and 6737.1.

(These sections of the Business and Professions Code are printed in full in the Nonresidential Manual.)

PRINCIPAL MECHANICAL DESIGNER–NAME	SIGNATURE	DATE	LIC. #
IVAN RAY CRANSTON JR.		1–30–03	M14001

MECHANICAL MANDATORY MEASURES

Indicate location on plans of Note Block for Mandatory Measures SHEET : M401

INSTRUCTIONS TO APPLICANT

For Detailed instructions on the use of this and all Energy Efficiency Standards compliance forms, please refer to the Nonresidential Manual published by the California Energy Commission.

MECH-1: Required on plans for all submittals. Part 2 may be incorporated in schedules on plans.
MECH-2: Required for all submittals, but may be incorporated in schedules on plans.
MECH-3: Required for all submittals unless required ventilation rates and airflows are shown on plans, see 4.3.4.
MECH-4: Required for all perscriptive submittlas.

Nonresidential Compliance Forms *March 2000A*

CERTIFICATE OF COMPLIANCE (Part 1 of 2) MECH-1

PROJECT NAME	LA MIRADA HIGH SCHOOL	DATE	1–30–03
PROJECT ADDRESS	1352 ADELFA AVE. LA MIRADA, CA 90638		
PRINCIPAL DESIGNER–MECHANICAL	F.T. ANDREWS, INC.	TELEPHONE (714) 722–9193	Building Permit #
DOCUMENTATION AUTHOR	KEVIN PHAM	TELEPHONE (714) 722–9193	Checked by/Date Enforcement Agency Use

GENERAL INFORMATION

DATE OF PLANS 1–30–03 | BUILDING CONDITIONED FLOOR AREA BUILDING E–F, 10,043 SQ. FT.

BUILDING TYPE ☒ NONRESIDENTIAL ☐ HIGH RISE RESIDENTIAL ☐ HOTEL/MOTEL GUEST ROOM

PHASE OF CONSTRUCTION ☐ NEW CONSTRUCTION ☐ ADDITION ☒ ALTERATION ☐ UNCONDITIONED (No efficiency)

METHOD OF MECHANICAL COMPLIANCE ☐ PRESCRIPTIVE ☒ PERFORMANCE

PROOF OF ENVELOPE COMPLIANCE ☒ PREVIOUS ENVELOPE PERMIT ☐ ENVELOPE COMPLIANCE ATTACHED

STATEMENT OF COMPLIANCE

This Certificate of Compliance lists the building features and performance specifications need to comply with Title 24, Parts 1 and 6 of the California Code of Regulations. This certificate applies only to building mechanical requirements.

The documentation preparer hereby certifies that the documentation is accurate and complete.

DOCUMENTATION AUTHOR	SIGNATURE	DATE
KEVIN PHAM		1–30–03

The Principal Mechanical Designer hereby certifies that the proposed building design represented in this set of construction documents is consistent with the other compliance forms and worksheets, with the specifications, and with any other calculations submitted with this permit application. The proposed building has been designed to meet the mechanical requirements contained in the applicable parts of sections 110 through 115, 120 through 124, 140 through 142, 144 and 145.

Please check one:

☒ I hereby affirm that I am eligible under the provisions of Division 3 of the Business and Professions Code to sign this document as the person responsible for its preparation; and that I am licensed in the State of California as a civil engineer or mechanical engineer, or I am a licensed architect.

☐ I affirm that I am eligible under the exemption to Division 3 of the Business and Professions Code by section 5537.2 or 6737.3 to sign this document as the person responsible for its preparation; and that I am a licensed contractor performing this work.

☐ I affirm that I am eligible under the exemption to Division 3 of the Business and Professions Code to sign this document because it pertains to a structure or type of work described pursuant to Business and Professions Code Sections 5537, 5538 and 6737.1.

(These sections of the Business and Professions Code are printed in full in the Nonresidential Manual.)

PRINCIPAL MECHANICAL DESIGNER–NAME	SIGNATURE	DATE	LIC. #
IVAN RAY CRANSTON JR.		1–30–03	M14001

MECHANICAL MANDATORY MEASURES

Indicate location on plans of Note Block for Mandatory Measures SHEET : M401

INSTRUCTIONS TO APPLICANT

For Detailed instructions on the use of this and all Energy Efficiency Standards compliance forms, please refer to the Nonresidential Manual published by the California Energy Commission.

MECH-1: Required on plans for all submittals. Part 2 may be incorporated in schedules on plans.
MECH-2: Required for all submittals, but may be incorporated in schedules on plans.
MECH-3: Required for all submittals unless required ventilation rates and airflows are shown on plans, see 4.3.4.
MECH-4: Required for all perscriptive submittlas.

Nonresidential Compliance Forms *March 2000A*

CERTIFICATE OF COMPLIANCE (Part 1 of 2) MECH-1

PROJECT NAME	LA MIRADA HIGH SCHOOL	DATE	1–30–03
PROJECT ADDRESS	1352 ADELFA AVE. LA MIRADA, CA 90638		
PRINCIPAL DESIGNER–MECHANICAL	F.T. ANDREWS, INC.	TELEPHONE (714) 722–9193	Building Permit #
DOCUMENTATION AUTHOR	KEVIN PHAM	TELEPHONE (714) 722–9193	Checked by/Date Enforcement Agency Use

GENERAL INFORMATION

DATE OF PLANS 1–30–03 | BUILDING CONDITIONED FLOOR AREA BUILDING G–H, 11,698 SQ. FT.

BUILDING TYPE ☒ NONRESIDENTIAL ☐ HIGH RISE RESIDENTIAL ☐ HOTEL/MOTEL GUEST ROOM

PHASE OF CONSTRUCTION ☐ NEW CONSTRUCTION ☐ ADDITION ☒ ALTERATION ☐ UNCONDITIONED (No efficiency)

METHOD OF MECHANICAL COMPLIANCE ☐ PRESCRIPTIVE ☒ PERFORMANCE

PROOF OF ENVELOPE COMPLIANCE ☒ PREVIOUS ENVELOPE PERMIT ☐ ENVELOPE COMPLIANCE ATTACHED

STATEMENT OF COMPLIANCE

This Certificate of Compliance lists the building features and performance specifications need to comply with Title 24, Parts 1 and 6 of the California Code of Regulations. This certificate applies only to building mechanical requirements.

The documentation preparer hereby certifies that the documentation is accurate and complete.

DOCUMENTATION AUTHOR	SIGNATURE	DATE
KEVIN PHAM		1–30–03

The Principal Mechanical Designer hereby certifies that the proposed building design represented in this set of construction documents is consistent with the other compliance forms and worksheets, with the specifications, and with any other calculations submitted with this permit application. The proposed building has been designed to meet the mechanical requirements contained in the applicable parts of sections 110 through 115, 120 through 124, 140 through 142, 144 and 145.

Please check one:

☒ I hereby affirm that I am eligible under the provisions of Division 3 of the Business and Professions Code to sign this document as the person responsible for its preparation; and that I am licensed in the State of California as a civil engineer or mechanical engineer, or I am a licensed architect.

☐ I affirm that I am eligible under the exemption to Division 3 of the Business and Professions Code by section 5537.2 or 6737.3 to sign this document as the person responsible for its preparation; and that I am a licensed contractor performing this work.

☐ I affirm that I am eligible under the exemption to Division 3 of the Business and Professions Code to sign this document because it pertains to a structure or type of work described pursuant to Business and Professions Code Sections 5537, 5538 and 6737.1.

(These sections of the Business and Professions Code are printed in full in the Nonresidential Manual.)

PRINCIPAL MECHANICAL DESIGNER–NAME	SIGNATURE	DATE	LIC. #
IVAN RAY CRANSTON JR.		1–30–03	M14001

MECHANICAL MANDATORY MEASURES

Indicate location on plans of Note Block for Mandatory Measures SHEET : M401

INSTRUCTIONS TO APPLICANT

For Detailed instructions on the use of this and all Energy Efficiency Standards compliance forms, please refer to the Nonresidential Manual published by the California Energy Commission.

MECH-1: Required on plans for all submittals. Part 2 may be incorporated in schedules on plans.
MECH-2: Required for all submittals, but may be incorporated in schedules on plans.
MECH-3: Required for all submittals unless required ventilation rates and airflows are shown on plans, see 4.3.4.
MECH-4: Required for all perscriptive submittlas.

Nonresidential Compliance Forms *March 2000A*

CERTIFICATE OF COMPLIANCE (Part 1 of 2) MECH-1

PROJECT NAME	LA MIRADA HIGH SCHOOL	DATE	1–30–03
PROJECT ADDRESS	1352 ADELFA AVE. LA MIRADA, CA 90638		
PRINCIPAL DESIGNER–MECHANICAL	F.T. ANDREWS, INC.	TELEPHONE (714) 722–9193	Building Permit #
DOCUMENTATION AUTHOR	KEVIN PHAM	TELEPHONE (714) 722–9193	Checked by/Date Enforcement Agency Use

GENERAL INFORMATION

DATE OF PLANS 1–30–03 | BUILDING CONDITIONED FLOOR AREA BUILDING I–J, 5,977 SQ. FT.

BUILDING TYPE ☒ NONRESIDENTIAL ☐ HIGH RISE RESIDENTIAL ☐ HOTEL/MOTEL GUEST ROOM

PHASE OF CONSTRUCTION ☐ NEW CONSTRUCTION ☐ ADDITION ☒ ALTERATION ☐ UNCONDITIONED (No efficiency)

METHOD OF MECHANICAL COMPLIANCE ☐ PRESCRIPTIVE ☒ PERFORMANCE

PROOF OF ENVELOPE COMPLIANCE ☒ PREVIOUS ENVELOPE PERMIT ☐ ENVELOPE COMPLIANCE ATTACHED

STATEMENT OF COMPLIANCE

This Certificate of Compliance lists the building features and performance specifications need to comply with Title 24, Parts 1 and 6 of the California Code of Regulations. This certificate applies only to building mechanical requirements.

The documentation preparer hereby certifies that the documentation is accurate and complete.

DOCUMENTATION AUTHOR	SIGNATURE	DATE
KEVIN PHAM		1–30–03

The Principal Mechanical Designer hereby certifies that the proposed building design represented in this set of construction documents is consistent with the other compliance forms and worksheets, with the specifications, and with any other calculations submitted with this permit application. The proposed building has been designed to meet the mechanical requirements contained in the applicable parts of sections 110 through 115, 120 through 124, 140 through 142, 144 and 145.

Please check one:

☒ I hereby affirm that I am eligible under the provisions of Division 3 of the Business and Professions Code to sign this document as the person responsible for its preparation; and that I am licensed in the State of California as a civil engineer or mechanical engineer, or I am a licensed architect.

☐ I affirm that I am eligible under the exemption to Division 3 of the Business and Professions Code by section 5537.2 or 6737.3 to sign this document as the person responsible for its preparation; and that I am a licensed contractor performing this work.

☐ I affirm that I am eligible under the exemption to Division 3 of the Business and Professions Code to sign this document because it pertains to a structure or type of work described pursuant to Business and Professions Code Sections 5537, 5538 and 6737.1.

(These sections of the Business and Professions Code are printed in full in the Nonresidential Manual.)

PRINCIPAL MECHANICAL DESIGNER–NAME	SIGNATURE	DATE	LIC. #
IVAN RAY CRANSTON JR.		1–30–03	M14001

MECHANICAL MANDATORY MEASURES

Indicate location on plans of Note Block for Mandatory Measures SHEET : M401

INSTRUCTIONS TO APPLICANT

For Detailed instructions on the use of this and all Energy Efficiency Standards compliance forms, please refer to the Nonresidential Manual published by the California Energy Commission.

MECH-1: Required on plans for all submittals. Part 2 may be incorporated in schedules on plans.
MECH-2: Required for all submittals, but may be incorporated in schedules on plans.
MECH-3: Required for all submittals unless required ventilation rates and airflows are shown on plans, see 4.3.4.
MECH-4: Required for all perscriptive submittlas.

Nonresidential Compliance Forms *March 2000A*

CERTIFICATE OF COMPLIANCE (Part 1 of 2) MECH-1

PROJECT NAME	LA MIRADA HIGH SCHOOL	DATE	1–30–03
PROJECT ADDRESS	1352 ADELFA AVE. LA MIRADA, CA 90638		
PRINCIPAL DESIGNER–MECHANICAL	F.T. ANDREWS, INC.	TELEPHONE (714) 722–9193	Building Permit #
DOCUMENTATION AUTHOR	KEVIN PHAM	TELEPHONE (714) 722–9193	Checked by/Date Enforcement Agency Use

GENERAL INFORMATION

DATE OF PLANS 1–30–03 | BUILDING CONDITIONED FLOOR AREA BUILDING N, 9,384 SQ. FT.

BUILDING TYPE ☒ NONRESIDENTIAL ☐ HIGH RISE RESIDENTIAL ☐ HOTEL/MOTEL GUEST ROOM

PHASE OF CONSTRUCTION ☐ NEW CONSTRUCTION ☐ ADDITION ☒ ALTERATION ☐ UNCONDITIONED (No efficiency)

METHOD OF MECHANICAL COMPLIANCE ☐ PRESCRIPTIVE ☒ PERFORMANCE

PROOF OF ENVELOPE COMPLIANCE ☒ PREVIOUS ENVELOPE PERMIT ☐ ENVELOPE COMPLIANCE ATTACHED

STATEMENT OF COMPLIANCE

This Certificate of Compliance lists the building features and performance specifications need to comply with Title 24, Parts 1 and 6 of the California Code of Regulations. This certificate applies only to building mechanical requirements.

The documentation preparer hereby certifies that the documentation is accurate and complete.

DOCUMENTATION AUTHOR	SIGNATURE	DATE
KEVIN PHAM		1–30–03

The Principal Mechanical Designer hereby certifies that the proposed building design represented in this set of construction documents is consistent with the other compliance forms and worksheets, with the specifications, and with any other calculations submitted with this permit application. The proposed building has been designed to meet the mechanical requirements contained in the applicable parts of sections 110 through 115, 120 through 124, 140 through 142, 144 and 145.

Please check one:

☒ I hereby affirm that I am eligible under the provisions of Division 3 of the Business and Professions Code to sign this document as the person responsible for its preparation; and that I am licensed in the State of California as a civil engineer or mechanical engineer, or I am a licensed architect.

☐ I affirm that I am eligible under the exemption to Division 3 of the Business and Professions Code by section 5537.2 or 6737.3 to sign this document as the person responsible for its preparation; and that I am a licensed contractor performing this work.

☐ I affirm that I am eligible under the exemption to Division 3 of the Business and Professions Code to sign this document because it pertains to a structure or type of work described pursuant to Business and Professions Code Sections 5537, 5538 and 6737.1.

(These sections of the Business and Professions Code are printed in full in the Nonresidential Manual.)

PRINCIPAL MECHANICAL DESIGNER–NAME	SIGNATURE	DATE	LIC. #
IVAN RAY CRANSTON JR.		1–30–03	M14001

MECHANICAL MANDATORY MEASURES

Indicate location on plans of Note Block for Mandatory Measures SHEET : M401

INSTRUCTIONS TO APPLICANT

For Detailed instructions on the use of this and all Energy Efficiency Standards compliance forms, please refer to the Nonresidential Manual published by the California Energy Commission.

MECH-1: Required on plans for all submittals. Part 2 may be incorporated in schedules on plans.
MECH-2: Required for all submittals, but may be incorporated in schedules on plans.
MECH-3: Required for all submittals unless required ventilation rates and airflows are shown on plans, see 4.3.4.
MECH-4: Required for all perscriptive submittlas.

Nonresidential Compliance Forms *March 2000A*

CERTIFICATE OF COMPLIANCE (Part 1 of 2) MECH-1

PROJECT NAME	LA MIRADA HIGH SCHOOL	DATE	1–30–03
PROJECT ADDRESS	1352 ADELFA AVE. LA MIRADA, CA 90638		
PRINCIPAL DESIGNER–MECHANICAL	F.T. ANDREWS, INC.	TELEPHONE (714) 722–9193	Building Permit #
DOCUMENTATION AUTHOR	KEVIN PHAM	TELEPHONE (714) 722–9193	Checked by/Date Enforcement Agency Use

GENERAL INFORMATION

DATE OF PLANS 1–30–03 | BUILDING CONDITIONED FLOOR AREA BUILDING L, 9,355 SQ. FT.

BUILDING TYPE ☒ NONRESIDENTIAL ☐ HIGH RISE RESIDENTIAL ☐ HOTEL/MOTEL GUEST ROOM

PHASE OF CONSTRUCTION ☐ NEW CONSTRUCTION ☐ ADDITION ☒ ALTERATION ☐ UNCONDITIONED (No efficiency)

METHOD OF MECHANICAL COMPLIANCE ☐ PRESCRIPTIVE ☒ PERFORMANCE

PROOF OF ENVELOPE COMPLIANCE ☒ PREVIOUS ENVELOPE PERMIT ☐ ENVELOPE COMPLIANCE ATTACHED

STATEMENT OF COMPLIANCE

This Certificate of Compliance lists the building features and performance specifications need to comply with Title 24, Parts 1 and 6 of the California Code of Regulations. This certificate applies only to building mechanical requirements.

The documentation preparer hereby certifies that the documentation is accurate and complete.

DOCUMENTATION AUTHOR	SIGNATURE	DATE
KEVIN PHAM		1–30–03

The Principal Mechanical Designer hereby certifies that the proposed building design represented in this set of construction documents is consistent with the other compliance forms and worksheets, with the specifications, and with any other calculations submitted with this permit application. The proposed building has been designed to meet the mechanical requirements contained in the applicable parts of sections 110 through 115, 120 through 124, 140 through 142, 144 and 145.

Please check one:

☒ I hereby affirm that I am eligible under the provisions of Division 3 of the Business and Professions Code to sign this document as the person responsible for its preparation; and that I am licensed in the State of California as a civil engineer or mechanical engineer, or I am a licensed architect.

☐ I affirm that I am eligible under the exemption to Division 3 of the Business and Professions Code by section 5537.2 or 6737.3 to sign this document as the person responsible for its preparation; and that I am a licensed contractor performing this work.

☐ I affirm that I am eligible under the exemption to Division 3 of the Business and Professions Code to sign this document because it pertains to a structure or type of work described pursuant to Business and Professions Code Sections 5537, 5538 and 6737.1.

(These sections of the Business and Professions Code are printed in full in the Nonresidential Manual.)

PRINCIPAL MECHANICAL DESIGNER–NAME	SIGNATURE	DATE	LIC. #
IVAN RAY CRANSTON JR.		1–30–03	M14001

MECHANICAL MANDATORY MEASURES

Indicate location on plans of Note Block for Mandatory Measures SHEET : M401

INSTRUCTIONS TO APPLICANT

For Detailed instructions on the use of this and all Energy Efficiency Standards compliance forms, please refer to the Nonresidential Manual published by the California Energy Commission.

MECH-1: Required on plans for all submittals. Part 2 may be incorporated in schedules on plans.
MECH-2: Required for all submittals, but may be incorporated in schedules on plans.
MECH-3: Required for all submittals unless required ventilation rates and airflows are shown on plans, see 4.3.4.
MECH-4: Required for all perscriptive submittlas.

Nonresidential Compliance Forms *March 2000A*

CERTIFICATE OF COMPLIANCE (Part 1 of 2) MECH-1

PROJECT NAME	LA MIRADA HIGH SCHOOL	DATE	1–30–03
PROJECT ADDRESS	1352 ADELFA AVE. LA MIRADA, CA 90638		
PRINCIPAL DESIGNER–MECHANICAL	F.T. ANDREWS, INC.	TELEPHONE (714) 722–9193	Building Permit #
DOCUMENTATION AUTHOR	KEVIN PHAM	TELEPHONE (714) 722–9193	Checked by/Date Enforcement Agency Use

GENERAL INFORMATION

DATE OF PLANS 1–30–03 | BUILDING CONDITIONED FLOOR AREA BUILDING M, 9,436 SQ. FT.

BUILDING TYPE ☒ NONRESIDENTIAL ☐ HIGH RISE RESIDENTIAL ☐ HOTEL/MOTEL GUEST ROOM

PHASE OF CONSTRUCTION ☐ NEW CONSTRUCTION ☐ ADDITION ☒ ALTERATION ☐ UNCONDITIONED (No efficiency)

METHOD OF MECHANICAL COMPLIANCE ☐ PRESCRIPTIVE ☒ PERFORMANCE

PROOF OF ENVELOPE COMPLIANCE ☒ PREVIOUS ENVELOPE PERMIT ☐ ENVELOPE COMPLIANCE ATTACHED

STATEMENT OF COMPLIANCE

This Certificate of Compliance lists the building features and performance specifications need to comply with Title 24, Parts 1 and 6 of the California Code of Regulations. This certificate applies only to building mechanical requirements.

The documentation preparer hereby certifies that the documentation is accurate and complete.

DOCUMENTATION AUTHOR	SIGNATURE	DATE
KEVIN PHAM		1–30–03

The Principal Mechanical Designer hereby certifies that the proposed building design represented in this set of construction documents is consistent with the other compliance forms and worksheets, with the specifications, and with any other calculations submitted with this permit application. The proposed building has been designed to meet the mechanical requirements contained in the applicable parts of sections 110 through 115, 120 through 124, 140 through 142, 144 and 145.

Please check one:

☒ I hereby affirm that I am eligible under the provisions of Division 3 of the Business and Professions Code to sign this document as the person responsible for its preparation; and that I am licensed in the State of California as a civil engineer or mechanical engineer, or I am a licensed architect.

☐ I affirm that I am eligible under the exemption to Division 3 of the Business and Professions Code by section 5537.2 or 6737.3 to sign this document as the person responsible for its preparation; and that I am a licensed contractor performing this work.

☐ I affirm that I am eligible under the exemption to Division 3 of the Business and Professions Code to sign this document because it pertains to a structure or type of work described pursuant to Business and Professions Code Sections 5537, 5538 and 6737.1.

(These sections of the Business and Professions Code are printed in full in the Nonresidential Manual.)

PRINCIPAL MECHANICAL DESIGNER–NAME	SIGNATURE	DATE	LIC. #
IVAN RAY CRANSTON JR.		1–30–03	M14001

MECHANICAL MANDATORY MEASURES

Indicate location on plans of Note Block for Mandatory Measures SHEET : M401

INSTRUCTIONS TO APPLICANT

For Detailed instructions on the use of this and all Energy Efficiency Standards compliance forms, please refer to the Nonresidential Manual published by the California Energy Commission.

MECH-1: Required on plans for all submittals. Part 2 may be incorporated in schedules on plans.
MECH-2: Required for all submittals, but may be incorporated in schedules on plans.
MECH-3: Required for all submittals unless required ventilation rates and airflows are shown on plans, see 4.3.4.
MECH-4: Required for all perscriptive submittlas.

Nonresidential Compliance Forms *March 2000A*

REVISED MAY 12 2004

IDENTIFICATION STAMP
DIV. OF THE STATE ARCHITECT
OFFICE OF REGULATION SERVICES
FILE NO. 19–H51
APPL. NO. 03–106434
AC.____ FLS.____ SS.____
DATE____

Dougherty ■ Dougherty
Architecture • Planning • Interior Design
2520 Camino Capistrano, Suite
Capistrano, CA 92624
(714) 427-0277

Copyright © 2002 Dougherty + Dougherty

FTA
F.T. ANDREWS, INC.
Fire Protection Engineers
828 N. Harbor Blvd.
Fullerton, CA 92832
Phone: (714) 722-9193
Fax: (714) 722-9195
Job Number: 22084

Architect Seal

Consultant Seal

LA MIRADA HIGH SCHOOL
MODERNIZATION
NORWALK – LA MIRADA UNIFIED SCHOOL DISTRICT
13520 ADELFA DRIVE LA MIRADA, CA 90638

MECHANICAL T-24
COMPLIANCE

Date:	04–01–04
Job:	20237.50
Scale:	NONE
Drawn:	
Revisions:	

M401

CERTIFICATE OF COMPLIANCE (Part 1 of 2) MECH-1

PROJECT NAME	LA MIRADA HIGH SCHOOL	DATE	1-30-03
PROJECT ADDRESS	1352 ADELFA AVE. LA MIRADA, CA 90638		Building Permit #
PRINCIPAL DESIGNER-MECHANICAL	F.T. ANDREWS, INC.	TELEPHONE	(714) 722-9193
DOCUMENTATION AUTHOR	KEVIN PHAM	TELEPHONE	(714) 722-9193
			Checked by/Date Enforcement Agency Use

GENERAL INFORMATION

DATE OF PLANS	1-30-03	BUILDING CONDITIONED FLOOR AREA	BUILDING O, 1,028 SQ. FT. (CLASSROOM 621 ONLY)
BUILDING TYPE	☒ NONRESIDENTIAL ☐ HIGH RISE RESIDENTIAL ☐ HOTEL/MOTEL GUEST ROOM		
PHASE OF CONSTRUCTION	☐ NEW CONSTRUCTION ☐ ADDITION ☒ ALTERATION ☐ UNCONDITIONED (file affidavit)		
METHOD OF MECHANICAL COMPLIANCE	☐ PRESCRIPTIVE ☒ PERFORMANCE		
PROOF OF ENVELOPE COMPLIANCE	☒ PREVIOUS ENVELOPE PERMIT ☐ ENVELOPE COMPLIANCE ATTACHED		

STATEMENT OF COMPLIANCE

This Certificate of Compliance lists the building features and performance specifications need to comply with Title 24, Parts 1 and 6 of the California Code of Regulations. This certificate applies only to building mechanical requirements.

The documentation preparer hereby certifies that the documentation is accurate and complete.

DOCUMENTATION AUTHOR	SIGNATURE	DATE
KEVIN PHAM	Kevin Pham	1-30-03

The Principal Mechanical Designer hereby certifies that the proposed building design represented in this set of construction documents is consistent with the other compliance forms and worksheets, with the specifications, and with any other calculations submitted with this permit application. The proposed building has been designed to meet the mechanical requirements contained in the applicable parts of sections 110 through 115, 120 through 124, 140 through 142, 144 and 145.

Please check one:

☒ I hereby affirm that I am eligible under the provisions of Division 3 of the Business and Professions Code to sign this document as the person responsible for its preparation; and that I am licensed in the State of California as a civil engineer or mechanical engineer, or I am a licensed architect.

☐ I affirm that I am eligible under the exemption to Division 3 of the Business and Professions Code by section 5537.2 or 6737.3 to sign this document as the person responsible for its preparation; and that I am a licensed contractor performing this work.

☐ I affirm that I am eligible under the exemption to Division 3 of the Business and Professions Code to sign this document because it pertains to a structure or type of work described pursuant to Business and Professions Code Sections 5537, 5538 and 6737.1.

(These sections of the Business and Professions Code are printed in full in the Nonresidential Manual.)

PRINCIPAL MECHANICAL DESIGNER-NAME	SIGNATURE	DATE	LIC. #
IVAN RAY CRANSTON JR.		1-30-03	M14001

MECHANICAL MANDATORY MEASURES

Indicate location on plans of Note Block for Mandatory Measures SHEET : M402

INSTRUCTIONS TO APPLICANT

For Detailed instructions on the use of this and all Energy Efficiency Standards compliance forms, please refer to the Nonresidential Manual published by the California Energy Commission.

MECH-1: Required on plans for all submittals. Part 2 may be incorporated in schedules on plans.
MECH-2: Required for all submittals, but may be incorporated in schedules on plans.
MECH-3: Required for all submittals unless required ventilation rates and airflows are shown on plans, see 4.3.4.
MECH-4: Required for all perscriptive submittals.

Nonresidential Compliance Forms *March 2000A*

CERTIFICATE OF COMPLIANCE (Part 1 of 2) MECH-1

PROJECT NAME	LA MIRADA HIGH SCHOOL	DATE	1-30-03
PROJECT ADDRESS	1352 ADELFA AVE. LA MIRADA, CA 90638		Building Permit #
PRINCIPAL DESIGNER-MECHANICAL	F.T. ANDREWS, INC.	TELEPHONE	(714) 722-9193
DOCUMENTATION AUTHOR	KEVIN PHAM	TELEPHONE	(714) 722-9193
			Checked by/Date Enforcement Agency Use

GENERAL INFORMATION

DATE OF PLANS	1-30-03	BUILDING CONDITIONED FLOOR AREA	BUILDING K, 7,839 SQ. FT.
BUILDING TYPE	☒ NONRESIDENTIAL ☐ HIGH RISE RESIDENTIAL ☐ HOTEL/MOTEL GUEST ROOM		
PHASE OF CONSTRUCTION	☐ NEW CONSTRUCTION ☐ ADDITION ☒ ALTERATION ☐ UNCONDITIONED (file affidavit)		
METHOD OF MECHANICAL COMPLIANCE	☐ PRESCRIPTIVE ☒ PERFORMANCE		
PROOF OF ENVELOPE COMPLIANCE	☒ PREVIOUS ENVELOPE PERMIT ☐ ENVELOPE COMPLIANCE ATTACHED		

STATEMENT OF COMPLIANCE

This Certificate of Compliance lists the building features and performance specifications need to comply with Title 24, Parts 1 and 6 of the California Code of Regulations. This certificate applies only to building mechanical requirements.

The documentation preparer hereby certifies that the documentation is accurate and complete.

DOCUMENTATION AUTHOR	SIGNATURE	DATE
KEVIN PHAM	Kevin Pham	1-30-03

The Principal Mechanical Designer hereby certifies that the proposed building design represented in this set of construction documents is consistent with the other compliance forms and worksheets, with the specifications, and with any other calculations submitted with this permit application. The proposed building has been designed to meet the mechanical requirements contained in the applicable parts of sections 110 through 115, 120 through 124, 140 through 142, 144 and 145.

Please check one:

☒ I hereby affirm that I am eligible under the provisions of Division 3 of the Business and Professions Code to sign this document as the person responsible for its preparation; and that I am licensed in the State of California as a civil engineer or mechanical engineer, or I am a licensed architect.

☐ I affirm that I am eligible under the exemption to Division 3 of the Business and Professions Code by section 5537.2 or 6737.3 to sign this document as the person responsible for its preparation; and that I am a licensed contractor performing this work.

☐ I affirm that I am eligible under the exemption to Division 3 of the Business and Professions Code to sign this document because it pertains to a structure or type of work described pursuant to Business and Professions Code Sections 5537, 5538 and 6737.1.

(These sections of the Business and Professions Code are printed in full in the Nonresidential Manual.)

PRINCIPAL MECHANICAL DESIGNER-NAME	SIGNATURE	DATE	LIC. #
IVAN RAY CRANSTON JR.		1-30-03	M14001

MECHANICAL MANDATORY MEASURES

Indicate location on plans of Note Block for Mandatory Measures SHEET : M402

INSTRUCTIONS TO APPLICANT

For Detailed instructions on the use of this and all Energy Efficiency Standards compliance forms, please refer to the Nonresidential Manual published by the California Energy Commission.

MECH-1: Required on plans for all submittals. Part 2 may be incorporated in schedules on plans.
MECH-2: Required for all submittals, but may be incorporated in schedules on plans.
MECH-3: Required for all submittals unless required ventilation rates and airflows are shown on plans, see 4.3.4.
MECH-4: Required for all perscriptive submittals.

Nonresidential Compliance Forms *March 2000A*

CERTIFICATE OF COMPLIANCE (Part 1 of 2) MECH-1

PROJECT NAME	LA MIRADA HIGH SCHOOL	DATE	1-30-03
PROJECT ADDRESS	1352 ADELFA AVE. LA MIRADA, CA 90638		Building Permit #
PRINCIPAL DESIGNER-MECHANICAL	F.T. ANDREWS, INC.	TELEPHONE	(714) 722-9193
DOCUMENTATION AUTHOR	KEVIN PHAM	TELEPHONE	(714) 722-9193
			Checked by/Date Enforcement Agency Use

GENERAL INFORMATION

DATE OF PLANS	1-30-03	BUILDING CONDITIONED FLOOR AREA	BUILDING R, 9,009 SQ. FT.
BUILDING TYPE	☒ NONRESIDENTIAL ☐ HIGH RISE RESIDENTIAL ☐ HOTEL/MOTEL GUEST ROOM		
PHASE OF CONSTRUCTION	☐ NEW CONSTRUCTION ☐ ADDITION ☒ ALTERATION ☐ UNCONDITIONED (file affidavit)		
METHOD OF MECHANICAL COMPLIANCE	☐ PRESCRIPTIVE ☒ PERFORMANCE		
PROOF OF ENVELOPE COMPLIANCE	☒ PREVIOUS ENVELOPE PERMIT ☐ ENVELOPE COMPLIANCE ATTACHED		

STATEMENT OF COMPLIANCE

This Certificate of Compliance lists the building features and performance specifications need to comply with Title 24, Parts 1 and 6 of the California Code of Regulations. This certificate applies only to building mechanical requirements.

The documentation preparer hereby certifies that the documentation is accurate and complete.

DOCUMENTATION AUTHOR	SIGNATURE	DATE
KEVIN PHAM	Kevin Pham	1-30-03

The Principal Mechanical Designer hereby certifies that the proposed building design represented in this set of construction documents is consistent with the other compliance forms and worksheets, with the specifications, and with any other calculations submitted with this permit application. The proposed building has been designed to meet the mechanical requirements contained in the applicable parts of sections 110 through 115, 120 through 124, 140 through 142, 144 and 145.

Please check one:

☒ I hereby affirm that I am eligible under the provisions of Division 3 of the Business and Professions Code to sign this document as the person responsible for its preparation; and that I am licensed in the State of California as a civil engineer or mechanical engineer, or I am a licensed architect.

☐ I affirm that I am eligible under the exemption to Division 3 of the Business and Professions Code by section 5537.2 or 6737.3 to sign this document as the person responsible for its preparation; and that I am a licensed contractor performing this work.

☐ I affirm that I am eligible under the exemption to Division 3 of the Business and Professions Code to sign this document because it pertains to a structure or type of work described pursuant to Business and Professions Code Sections 5537, 5538 and 6737.1.

(These sections of the Business and Professions Code are printed in full in the Nonresidential Manual.)

PRINCIPAL MECHANICAL DESIGNER-NAME	SIGNATURE	DATE	LIC. #
IVAN RAY CRANSTON JR.		1-30-03	M14001

MECHANICAL MANDATORY MEASURES

Indicate location on plans of Note Block for Mandatory Measures SHEET : M402

INSTRUCTIONS TO APPLICANT

For Detailed instructions on the use of this and all Energy Efficiency Standards compliance forms, please refer to the Nonresidential Manual published by the California Energy Commission.

MECH-1: Required on plans for all submittals. Part 2 may be incorporated in schedules on plans.
MECH-2: Required for all submittals, but may be incorporated in schedules on plans.
MECH-3: Required for all submittals unless required ventilation rates and airflows are shown on plans, see 4.3.4.
MECH-4: Required for all perscriptive submittals.

Nonresidential Compliance Forms *March 2000A*

CERTIFICATE OF COMPLIANCE (Part 1 of 2) MECH-1

PROJECT NAME	LA MIRADA HIGH SCHOOL	DATE	1-30-03
PROJECT ADDRESS	1352 ADELFA AVE. LA MIRADA, CA 90638		Building Permit #
PRINCIPAL DESIGNER-MECHANICAL	F.T. ANDREWS, INC.	TELEPHONE	(714) 722-9193
DOCUMENTATION AUTHOR	KEVIN PHAM	TELEPHONE	(714) 722-9193
			Checked by/Date Enforcement Agency Use

GENERAL INFORMATION

DATE OF PLANS	1-30-03	BUILDING CONDITIONED FLOOR AREA	BUILDING T, 10,329 SQ. FT.
BUILDING TYPE	☒ NONRESIDENTIAL ☐ HIGH RISE RESIDENTIAL ☐ HOTEL/MOTEL GUEST ROOM		
PHASE OF CONSTRUCTION	☐ NEW CONSTRUCTION ☐ ADDITION ☒ ALTERATION ☐ UNCONDITIONED (file affidavit)		
METHOD OF MECHANICAL COMPLIANCE	☐ PRESCRIPTIVE ☒ PERFORMANCE		
PROOF OF ENVELOPE COMPLIANCE	☒ PREVIOUS ENVELOPE PERMIT ☐ ENVELOPE COMPLIANCE ATTACHED		

STATEMENT OF COMPLIANCE

This Certificate of Compliance lists the building features and performance specifications need to comply with Title 24, Parts 1 and 6 of the California Code of Regulations. This certificate applies only to building mechanical requirements.

The documentation preparer hereby certifies that the documentation is accurate and complete.

DOCUMENTATION AUTHOR	SIGNATURE	DATE
KEVIN PHAM	Kevin Pham	1-30-03

The Principal Mechanical Designer hereby certifies that the proposed building design represented in this set of construction documents is consistent with the other compliance forms and worksheets, with the specifications, and with any other calculations submitted with this permit application. The proposed building has been designed to meet the mechanical requirements contained in the applicable parts of sections 110 through 115, 120 through 124, 140 through 142, 144 and 145.

Please check one:

☒ I hereby affirm that I am eligible under the provisions of Division 3 of the Business and Professions Code to sign this document as the person responsible for its preparation; and that I am licensed in the State of California as a civil engineer or mechanical engineer, or I am a licensed architect.

☐ I affirm that I am eligible under the exemption to Division 3 of the Business and Professions Code by section 5537.2 or 6737.3 to sign this document as the person responsible for its preparation; and that I am a licensed contractor performing this work.

☐ I affirm that I am eligible under the exemption to Division 3 of the Business and Professions Code to sign this document because it pertains to a structure or type of work described pursuant to Business and Professions Code Sections 5537, 5538 and 6737.1.

(These sections of the Business and Professions Code are printed in full in the Nonresidential Manual.)

PRINCIPAL MECHANICAL DESIGNER-NAME	SIGNATURE	DATE	LIC. #
IVAN RAY CRANSTON JR.		1-30-03	M14001

MECHANICAL MANDATORY MEASURES

Indicate location on plans of Note Block for Mandatory Measures SHEET : M402

INSTRUCTIONS TO APPLICANT

For Detailed instructions on the use of this and all Energy Efficiency Standards compliance forms, please refer to the Nonresidential Manual published by the California Energy Commission.

MECH-1: Required on plans for all submittals. Part 2 may be incorporated in schedules on plans.
MECH-2: Required for all submittals, but may be incorporated in schedules on plans.
MECH-3: Required for all submittals unless required ventilation rates and airflows are shown on plans, see 4.3.4.
MECH-4: Required for all perscriptive submittals.

Nonresidential Compliance Forms *March 2000A*

REVISED

IDENTIFICATION STAMP
DIV. OF THE STATE ARCHITECT
OFFICE OF REGULATION SERVICES
FILE NO. 19-H51
APPL. NO. 03-106434
AC.____ FLS. NC SS.____
DATE_____

MAY 12 2004

Dougherty + Dougherty
Architecture • Planning • Interior Design
3194-D Airport Loop Drive
Costa Mesa, CA 92626
(714) 427-0277

Copyright © 2002 Dougherty + Dougherty

FTA
F.T. Andrews, Inc.
831 S. Harbor Blvd.
Anaheim, CA 92805
Phone (714) 772-9193
Fax (714) 772-2594
Job Number: 22084

Architect Seal

Consultant Seal

LA MIRADA HIGH SCHOOL
MODERNIZATION
NORWALK - LA MIRADA UNIFIED SCHOOL DISTRICT
13520 ADELFA DRIVE LA MIRADA, CA 90638

MECHANICAL T-24
COMPLIANCE

Date:	04-01-04
Job:	20237.50
Scale:	NONE
Drawn:	
Revisions:	

M402

FIXTURE SCHEDULE

DETAIL	ITEM	FIXTURE	ROUGH-IN CONNECTIONS TRAP	WASTE	VENT	HOT WATER	COLD WATER	GAS	DESCRIPTION
	WC 1	WATER CLOSET	INT.	4"	2"	--	1"	--	A/S NO. 2234.015 "MADERA", AQUAMETER SIPHON JET, FLOOR MOUNTED. ELONGATED BOWL. COMPLETE WITH SLOAN ROYAL NO. 8110-SMO SENSOR VALVE, OLSONITE 95CC-SS SEAT AND A/S BOLT CAPS.
	WC 2	WATER CLOSET (ADA)	INT.	4"	2"	--	1"	--	A/S NO. 2305.100 "MADERA ADA", AQUAMETER SIPHON JET, FLOOR MOUNTED. ELONGATED BOWL. COMPLETE WITH SLOAN ROYAL NO. 8110-SOM SENSOR VALVE, OLSONITE 95CC-SS SEAT AND A/S BOLT CAPS.
	UR 1	URINAL	INT.	2"	1-1/2"	--	3/4"	--	A/S NO. 6541.132 "ALLBROOK", WALL HUNG, SIPHON JET. COMPLETE WITH SLOAN ROYAL NO. 186-1.0-SMO SENSOR VALVE, J.R. SMITH NO. 644 WALL HANGER AND STAINLESS STEEL STRAINER.
	UR 2	URINAL (ADA)	INT.	2"	1-1/2"	--	3/4"	--	SAME AS UR-1 MOUNTED AT ACCESSIBLE HIEGHT
	L 1	LAVATORY (ADA) STUDENT	1-1/4"	2"	1-1/2"	--	1/2"	--	COMMERCIAL ENAMELING NO. 551, 20" X 18", WALL HUNG. COMPLETE WITH CHICAGO NO. 333-665 FITTING, J.R.SMITH NO.0700 CARRIER WITH FLOOR SUPPORT AND STEEL PLATE, CHICAGO NO. 1006 LOOSE KEY STOP WITH RIGID SUPPLY, McGUIRE NO. 155A-PW DRAIN AND McGUIRE NO. 2150LA-WC, L.A. PATTERN P-TRAP.
	L 2	LAVATORY (ADA) FACULTY	1-1/4"	2"	1-1/2"	1/2"	1/2"	--	COMMERCIAL ENAMELING NO. 550, 20" X 18", WALL HUNG. COMPLETE WITH CHICAGO NO. 408A-665 FITTING, J.R. SMITH NO. 0700 CARRIER WITH FLOOR SUPPORT AND STEEL PLATE. CHICAGO NO. 1006 LOOSE KEY STOPS WITH RIGID SUPPLIES, McGUIRE NO. PW 155WC DRAIN AND McGUIRE NO. PW-2150LA-WC, L.A. PATTERN P-TRAP.
	S 1	STUDENT SINK (ADA)	2"	2"	1-1/2"	--	1/2"	--	HAWS MODEL NO. 4110ADA, 24"x 16"x 5" DEEP, COUNTER MTD. ENAMELED IRON, COMPLETE WITH CHICAGO NO.350 SINGLE LEVEL HANDLE FAUCET, HAWS NO. 5054LF BUBBLER WITH LEVER HANDLE HAWS NO. 6455 GRID DRAIN STRAINER AND CHICAGO NO.1006 LOOSE KEY STOPS & L.A. PATTERN P-TRAP WITH RIGID SUPPLY SUPPLIES.
	S 2	WORKROOM SINK (ADA)	2"	2"	1-1/2"	1/2"	1/2"	--	COMMERCIAL ENAMELING MODEL NO. 720- 30" X 18" X 6" DP. ACID RESISTING ENAMELED CAST IRON W/ McGUIRE NO. 8090 P-TRAP, NO. 152 STRAINER, CHICAGO NO. 201A FAUCET, AND CHICAGO NO. 45-KK-C LOOSE KEY STOPS W/ RIGID SUPPLIES.
	S 3	ART STUDIO SINK (ADA)	2"	2"	1-1/2"	1/2"	1/2"	--	COMMERCIAL ENAMELING MODEL NO. 720- 30" X 18" X 6" DP. ACID RESISTING ENAMELED CAST IRON W/ McGUIRE NO. 8090 P-TRAP, NO. 152 STRAINER, CHICAGO NO. 408A-665 FAUCET, NO. 45-KK-C LOOSE KEY STOP W/ RIGID SUPPLY.
	S 4	BIOLOGY LAB SINK (ADA)	2"	2"	1-1/2"	--	1/2"	--	COMMERCIAL ENAMELING MODEL NO. 720- 30" X 18" X 6" DP. ACID RESISTING ENAMELED CAST IRON W/ McGUIRE NO. 8090 P-TRAP, NO. 152 STRAINER, CHICAGO NO.350-VR GOOSENECK FAUCET, NO. 45-KK-C LOOSE KEY STOP W/ RIGID SUPPLY.
	S 5	LIFE SKILLS SINK	2"	2"	1-1/2"	1/2"	1/2"	--	COMMERCIAL ENAMELING MODEL NO. 748-4 33" X 22" X 8½" ACID RESISTING ENAMELED CAST IRON DOUBLE COMPARTMENT COMPLETE W/McGUIRE NO. 151M CRUMB CUP STRAINER, ISE BADGER 5, 5/8 H.P., 120 V., 1 PHASE DISPOSER WITH WALL SWITCH AND SINK ADAPTER, CHICAGO NO. 201A FITTING, CHICAGO NO. 1006 LOOSE KEY STOPS WITH RIGID SUPPLIES AND McGUIRE NO. 111C25G17 WASTE AND McGUIRE 8090CNC P-TRAP. (WRAPPED W/ INSULATING TAPE)
	S 6	LIFE SKILLS SINK (ADA)	2"	2"	1-1/2"	1/2"	1/2"	--	JUST NO. DL-ADA-1933-A-GR, 3 HOLE PUNCHED, DOUBLE COMPARTMENT, 18 GAUGE TYPE 304 STAINLESS STEEL, SELF-RIMMING, 19" X 33" X 6" DEEP, COMPLETE WITH McGUIRE NO. 151M CRUMB CUP STRAINER, IN-SINK-ERATOR BADGER 5, 5/8 H.P., 120 V., 1 PHASE DISPOSER WITH WALL SWITCH AND SINK ADAPTER, CHICAGO NO. 201A FITTING, CHICAGO NO. 1006 LOOSE KEY STOPS WITH RIGID SUPPLIES AND McGUIRE NO. 111C25G17 WASTE AND McGUIRE 8090CNC P-TRAP. (WRAPPED W/ INSULATING TAPE)
1	S 7	NURSES SINK (ADA)	2"	2"	1-1/2"	1/2"	1/2"	--	JUST NO. SL-ADA-1617-A-GR, 3 HOLE PUNCHED, SINGLE COMPARTMENT, 18 GAUGE-TYPE 304 STAINLESS STEEL, SELF-RIMMING, 16" X 17" X 5" DEEP. COMPLETE WITH CHICAGO NO. 786-E3 FITTING, CHICAGO NO. 1006 LOOSE KEY STOPS WITH RIGID SUPPLIES, McGUIRE NO. PW1152WC DRAIN AND McGUIRE NO. VPW8090NCO P-TRAP.
	SS 1	SERVICE SINK	3"	3"	2"	3/4"	3/4"	--	COMMERCIAL ENAMELING NO. 866, ENAMELED CAST IRON, WALL MOUNTED. COMPLETE WITH RIM GUARD, CHICAGO NO. 305-VB-R FITTING WITH INTEGRAL STOPS, PAIL HOOK, VACUUM BREAKER AND ADJUSTABLE SUPPLY ARMS, C.E. NO. 870-3, 3" CAST IRON P-TRAP WITH FLOOR SUPPORT CHROME STRAINER AND WALL HANGER.
	F 1	FAUCET	--	--	--	--	½"	--	CHICAGO NO. 324-699 METERING FAUCET W/ INDEXED PUSH BUTTON HANDLE, MVP METERING CARTRIDGE, FLOW CONTROL POLISHED CHROME FINISH. (SET METER TO 10 SECONDS)
	LS 1	LAB SINK (ADA) STUDENTS RM. 274	1-1/4"	2"	1-1/2"	--	1/2"	1/2"	SINK UNDER ARCHITECTURAL SECTION OF SPECIFICATIONS: COMPLETE W/ (2) CHICAGO NO. 928-369-VRCP DECK MTD. VANDAL RESISTENT FAUCETS W/ GN2BVB VAC. BRKR. SPOUT, NO. 369 ADA COMPLIANT HANDLE, E7 LAB NOZZLE, POLISHED CHROME FINISH. INSTALL ONE FAUCET AT EACH END OF SINK. INCLUDE (2) CHICAGO NO. 981VR907BC GAS TURRETS AND INSTALL ONE AT EACH END OF SINK. CHICAGO NO. 1006 LOOSE KEY STOPS, KEWAUNEE NO. 0464 POLYETHYLENE TRAP AND SINK OUTLET ASSEMBLY.
	LS 2	LAB SINK (ADA) INSTRUCTOR RM. 274	1-1/4"	2"	1-1/2"	--	1/2"	1/2"	SAME AS LS/1 EXCEPT ONLY ONE SINGLE FAUCET AND ONE DUAL OUTLET GAS TURRET
	LS 3	LAB SINK (ADA) STUDENTS RM. 220	1-1/4"	2"	1-1/2"	--	1/2"	1/2"	SINK UNDER ARCHITECTURAL SECTION OF SPECIFICATIONS: COMPLETE W/ (2) CHICAGO NO. 1301-GN2BVB-369-VR DECK MTD. VANDAL RESISTENT, MUTLI-SERVICE FITTING W/ 369 ADA HANDLE, NO. 1-100-XT CARTRIDGE, E7 LAB NOZZLE, (2) 909C GAS COCKS, CHROME FINISH. INSTALL ONE FITTING AT EACH END OF SINK. CHICAGO NO. 1006 LOOSE KEY STOP, KEWAUNEE NO. 0464 POLYETHYLENE TRAP AND SINK OUTLET ASSEMBLY
	LS 4	LAB SINK (ADA) INSTRUCTOR RM. 220	1-1/4"	2"	1-1/2"	--	1/2"	1/2"	SAME AS LS/3 EXCEPT ONLY ONE FITTING INSTEAD OF 2
1	DF 1	DRINKING FOUNTAIN (ADA)	2"	2"	1-1/2"	--	1/2"	--	HAWS NO. 3150, HI-LO, CONCRETE PEDESTAL WITH EXPOSED AGGREGATE FINISH, VANDAL RESISTANT, RECESSED PUSH BUTTON VALVES, STEEL MOUNTING PLATE AND SCREWDRIVER STOP.
	DF 2	DRINKING FOUNTAIN (ADA)	2"	2"	1-1/2"	--	1/2"	--	HAWS NO. 1119.14, HI-LO, 14 GA. TYPE 304 STAINLESS STL. W/ VANADAL RESISTANT BOTTOM PLATE, NO. 6422 STRAINER, 6700 MOUNTING PLATE & 6800 SUPPORT CARRIER & CHICAGO NO. 45-LK LOOSE KEY STOP.
	FD 1	FLOOR DRAIN	2"	2"	1-1/2"	--	1/2" T.P.	--	J.R. SMITH NO.2010-A, CAST IRON BODY. COMPLETE WITH ROUND POLISHED NICKEL-BRONZE TOP, FLASHING COLLAR, TRAP PRIMER CONNECTION AND P-TRAP.
	HB 1	HOSE BIBB	--	--	--	--	3/4"	--	ACORN NO. 8121, WALL MOUNTED WITH INTEGRAL VANDAL RESISTENT VACUUM BREAKER AND LOOSE KEY HANDLE.
	TP 1	TRAP PRIMER	--	--	--	--	½"	--	MIFAB NO. M-500 PRESSURE DROP ACTIVATED BRASS TRAP SEAL PRIMER WITH SEPARATE SHUT OFF VALVE, ACCESS PANEL AND ½" COPPER TO TAP IN DRAIN
1	SH 1	SHOWER (ADA) BOYS	--	--	--	1/2"	1/2"	--	BRADLEY MODEL HN250/6'-0"/-TF- VR-SL SURFACE MOUNTED WALL SHOWER, COMPLETE WITH MIXING VALVE, DIVERTER, HAND HELD SS.S. HOSE SPRAY, L-SHAPED GRAB BAR & FOLD DOWN PLASTIC SEAT
	SH 2	SHOWER (ADA) GIRLS	--	--	--	1/2"	1/2"	--	BRADLEY MODEL HN250/5'-6"/-TF-VL-SR SURFACE MOUNTED WALL SHOWER, COMPLETE WITH MIXING VALVE, DIVERTER, HAND HELD SS.S. HOSE SPRAY, L-SHAPED GRAB BAR & FOLD DOWN PLASTIC SEAT
16 P110	WH 1	WATER HEATER	--	--	--	3/4"	3/4"	--	A.O. SMITH NO. DSE-30, GLASS LINED, 30 GALLON STORAGE RECOVERY = 31 G.P.H. AT 80° F. RISE. WITH (2) 3 kW IMMERSION HEATERS, 208 VOLT, 60 CYCLE, 3 PHASE, J-BOX. APPROXIMATE OPERATING WEIGHT = 400 LBS., COMPLETE WITH RED BRASS NIPPLES. MUST HAVE ASHRAE 90.1B-1990 STICKER OR OTHERWISE COMPLY WITH TITLE 24 REQUIREMENTS. INSTALL CONBRAGO SERIES 78-RV COMBINATION SHUT-OFF AND THERMAL EXPANSION VALVE ON COLD WATER INLET.
17 P110	WH 2	WATER HEATER	--	--	--	3/4"	3/4"	3/4"	A.O. SMITH NO. BT-80, GLASS LINED, 75 GALLON STORAGE, 75,000 BTU/HR INPUT, RECOVERY = 69 G.P.H. AT 70 DEGREES F. RISE, 4" TYPE 'B' FLUE, APPROXIMATE OPERATING WEIGHT = 925 LBS., COMPLETE WITH RED BRASS NIPPLES. MUST HAVE ASHRAE 90.1B-1992 STICKER OR OTHERWISE COMPLY WITH TITLE 24 REQUIREMENTS. (120 VOLT ELECTRONIC IGNITION)
6 P110	WH 3	WATER HEATER	--	--	--	1/2"	1/2"	--	STEIBEL ELTRON NO. DHC 4-3, 277V.1ø,60Hz. 4.5kW
	ET 1	EXPANSION TANK	--	--	--	--	3/4"	--	AMTROL "THERM-X-TROL" NO. ST-5 WITH MAXIMUM WORKING PRESSURE OF 125 PSIG. TOTAL TANK VOLUME = 2. GALLON FACTORY PRECHARGED TO 40 PSIG. SET T/PRV TO 125PSI. MAX. OP. WT. = 13 #
	CP 1	CIRCULATING PUMP	--	--	--	--	3/4"	--	B&G SERIES 100, INLINE TYPE, 5 G.P.M. AT 8 FEET OF HEAD, 1/12 H.P., 120 VOLT, 1 PHASE, 1,750 RPM.
	PT 1	PLASTER TRAP	2"	2"	1-1/2"	--	--	--	J.R.SMITH NO. 8715T STEEL BODY WITH WHITE DUCO FINISH, SEDIMENT STRAINER, REMOVABLE STAINLESS STEEL SCREENS AND CAST IRON COVER.
	WHA 1	WATER HAMMER ARRESTOR	--	--	--	--	3/4"	--	P.P.P. WATER HAMMER ARRESTOR, SIZED AND INSTALLED PER MANUFACTURER'S RECOMMENDATIONS BEHIND ACCESS PANEL.

FIXTURE SCHEDULE

ITEM	FIXTURE	ROUGH-IN CONNECTIONS TRAP	WASTE	VENT	HOT WATER	COLD WATER	GAS	DESCRIPTION
FS 1	FLOOR SINK	2"	2"	2"	--	--	--	J.R. SMITH NO. 3150-SBP CAST IRON, ACID RESIST. ENAMEL INSIDE COMPLETE WITH SOLID BOTTOM PORTED SEDIMENT BUCKET WITH STAINLESS STEEL MESH SCREEN, SEEPAGE FLANGE AND TRAP PRIMER CONNECTION.
ES 1	EMERGENCY SHOWER/ EYEWASH	2"	2"	2"	--	1½"	--	GUARDIAN MODEL NO. 2150 BARRIER FREE COMBINATION EMERGENCY SHOWER & SWING DOWN EYEWASH W/ DRAIN PAN AND RECESSED STAINLESS STEEL CABINET
CR 1	CONDENSATE RECEPTOR	2"	2"	1½"	--	--	--	J.R. SMITH NO. 3100Y-11 CAST IRON, ACID RESIST. ENAMEL INSIDE WITH NO GRATE
GT 1	GAS TURRET	--	--	--	--	--	3/8"	CHICAGO NO. 987-909AGVCP Y-PATTERN WALL FLANGE W/ TWO BALL VALVES AT 90° COMPLETE W/ SERRATED HOSE NOZZLE, GAS BUTTONS, SHANK WITH LOCK WASHERS
BFP 1	BACKFLOW PREVENTER	--	--	--	--	2"	--	COMBRACO MODEL NO. 40-200, 2" SIZE, R.P. TYPE, COMPLETE WITH TEST COCKS, UNIONS, GATE VALVES AND FULL SIZE DRAIN IN "U" FLOW CONFIGURATION.

GENERAL NOTES

1. BEFORE COMMENCEMENT OF WORK, THE CONTRACTOR SHALL VERIFY THE EXACT LOCATIONS, ELEVATIONS AND CHARACTERISTICS OF ALL PIPING, AND SHALL IMMEDIATELY NOTIFY THE ARCHITECT OF ANY DISCREPANCIES.
2. EXACT LOCATIONS AND MOUNTING HEIGHTS OF PLUMBING FIXTURES SHALL BE OBTAINED FROM THE ARCHITECTURAL DRAWINGS.
3. SEE ARCHITECTURAL DRAWINGS FOR ACCESSIBLE FIXTURE LOCATIONS AND MOUNTING HEIGHTS. INSULATE ALL EXPOSED HOT WATER AND DRAIN PIPING BELOW ALL LAVATORIES AND SINKS WITH TRUEBRO NO. 102W & 105W INSULATION KIT AND OFFSET P-TRAP TO WALL. ALL WATER CLOSET FLUSHING LEVERS SHALL BE TO THE WIDE SIDE OF STALL.
4. TRAPS FOR ALL LAVATORIES AND SINKS SHALL TRAP STRAIGHT BACK TO WALL WITH ALL REQUIRED OFFSETS HAPPENING WITHIN THE WALL.
5. ALL PLUMBING WORK SHALL BE INSTALLED SO AS TO AVOID INTERFERENCE WITH ELECTRICAL AND MECHANICAL EQUIPMENT AND STRUCTURAL FRAMING.
6. ALL CLEANOUTS SHALL BE INSTALLED WHERE READILY ACCESSIBLE. THE CONTRACTOR SHALL COORDINATE ALL CLEANOUT LOCATIONS WITH EQUIPMENT, CABINETS, ETC., AND THE ARCHITECT PRIOR TO ANY INSTALLATION.
7. ALL PRESSURIZED WATER PIPING BELOW FLOOR SHALL BE TYPE "L" SOFT ANNEALED COPPER TUBING WITH NO FITTINGS BELOW SLAB.
8. ALL PLUMBING FIXTURE VENTS TO TERMINATE A MIN. OF 12 INCHES FROM ANY VERTICAL SURFACE AND 10 FEET FROM ANY OUTSIDE AIR INTAKES.
9. ALL VALVES, UNIONS, ETC. TO BE SAME SIZE AS PIPE UNLESS OTHERWISE INDICATED ON DRAWINGS.
10. UNIONS SHALL BE PROVIDED AND INSTALLED AFTER EACH SCREW-TYPE VALVE AND PRIOR TO EQUIPMENT CONNECTIONS.
11. ALL WORK AND MATERIAL SHALL BE PERFORMED AND INSTALLED IN COMPLIANCE WITH THE FOLLOWING CODES AS ADOPTED AND AMENDED BY THE INSPECTING AUTHORITY. NOTHING IN THESE DRAWINGS IS TO BE CONSTRUED TO PERMIT WORK NOT CONFORMING TO THESE CODES OR OTHERS APPLICABLE TO THIS PROJECT:
    - 1997 UBC AND 2001 CALIFORNIA AMENDMENTS (01 CALIFORNIA BUILDING CODE - PART 2,TITLE 24 C.C.R).
    - 1999 NEC AND 2001 CALIFORNIA AMENDMENTS (01 CALIFORNIA ELECTRICAL CODE - PART 3,TITLE 24 C.C.R).
    - 2000 UMC AND 2001 CALIFORNIA AMENDMENTS (01 CALIFORNIA MECHANICAL CODE - PART 4,TITLE 24 C.C.R)-(PUBLISHER: IAPMO).
    - 2000 UPC AND 2001 CALIFORNIA AMENDMENTS (01 CALIFORNIA PLUMBING CODE - PART 5,TITLE 24 C.C.R)-(PUBLISHER: IAPMO).
    - 2000 UFC AND 2001 CALIFORNIA AMENDMENTS (01 CALIFORNIA FIRE CODE - PART 9,TITLE 24 C.C.R).
12. BEFORE FABRICATION OR INSTALLATION THIS CONTRACTOR SHALL VERIFY EXACT LOCATIONS OF ALL MECHANICAL EQUIPMENT AND EQUIPMENT PROVIDED UNDER ANOTHER SECTION OF SPECIFICATIONS. EXACT ROUGH-IN LOCATIONS AND REQUIREMENTS SHALL BE COORDINATED IN FIELD.
13. ALL POINTS OF CONNECTION SHALL BE COORDINATED WITH THE GENERAL CONTRACTOR PRIOR TO BID.
14. ALL WASTE PIPING SHALL SLOPE AT 2% UNLESS OTHERWISE INDICATED.
15. ALL VALVES, TRAP PRIMER, WATER HAMMER ARRESTERS OR OTHER EQUIPMENT SHOWN IN WALLS OR ABOVE NON-ACCESSIBLE CEILINGS SHALL BE INSTALLED BEHIND AN ACCESS PANEL.
16. HOT WATER AND CONDENSATE PIPING SHALL BE INSULATED. INSULATION SHALL HAVE A FLAME SPREAD OF NOT MORE THAN 25 AND A SMOKE DENSITY NOT EXCEEDING 50 PER UMC SECTION 1201.1.1.8.
17. ALL PLUMBING FIXTURES AND EQUIPMENT SHALL BE CERTIFIED BY THE CALIFORNIA STATE ENERGY COMMISSION TO COMPLY WITH EFFICIENCY STANDARDS PER SECTION 111 OF THE TITLE-24 PART 6, 1998.
18. ALL BRACING OF PIPING SHALL BE INSTALLED IN ACCORDANCE WITH SMACNA GUIDELINES AS APPROVED BY DSA.
19. A COPY OF THE GUIDELINES PUBLISHED BY SMACNA AND APPROVED BY DSA SHALL BE PROVIDED BY THE CONTRACTOR AND KEPT ON THE JOB AT ALL TIMES.
20. THE CONTRACTOR SHALL BE RESPONSIBLE FOR PATCHING AND REPAIRING ALL PAVED AREAS WHICH ARE EXCAVATED AND/OR DAMAGED BY HIS OPERATIONS. IN ADDITION, THE CONTRACTOR SHALL RESTORE TO THEIR ORIGINAL CONDITION ALL PLANTED AREAS DAMAGED BY HIS OPERATIONS.
21. ALL CONNECTIONS TO EXISTING SERVICES SHALL BE MADE SUCH THAT INTERRUPTION TIME WILL BE AS SHORT AS POSSIBLE. THE CONTRACTOR SHALL GIVE THE OWNER'S REPRESENTATIVE SUFFICIENT NOTICE OF SUCH INTERRUPTION AND THE ACTUAL SHUT DOWN TIME SHALL BE AT A TIME DESIGNATED BY THE OWNER'S REPRESENTATIVE.
22. ALL EXISTING PIPING DAMAGED DURING EXCAVATION SHALL BE REPAIRED WITH MATERIALS TO MATCH EXISTING BY THE CONTRACTOR.
23. ALL EXISTING PIPING AND EQUIPMENT THAT IS REMOVED SHALL BE DISPOSED OF AS DIRECTED BY THE OWNER'S REPRESENTATIVE.
24. ALL CUTTING OF EXISTING PAVINGS, WALKS AND/OR FLOORS SHALL BE BY MACHINE SAW CUTTING. HOLES FOR PIPES IN CONCRETE WALLS OR FLOORS SHALL BE DONE BY CORE DRILLING EQUIPMENT.
23. CONNECTION BETWEEN INCOMPATIBLE MATERIALS ABOVE GRADE AND INSIDE BUILDING SHALL BE MADE WITH TWO (2) DIELECTRIC UNIONS SEPARATED BY A TWELVE INCH (12") SECTION OF RED BRASS PIPE.
24. CAP AND ABANDON ALL EXISTING WASTE PIPING BELOW FLOOR EXCEPT INDICATED TO BE REUSED. ROUTER AND CLEAN ALL EXISTING WASTE PIPING TO BE REUSED.
25. EXISTING PIPING ABOVE CEILING AND IN EXISTING WALLS BEING DEMOLISHED, THAT IS NOT BEING REUSED, SHALL BE REMOVED. COORDINATE

EXTENT OF DEMOLITION WITH THE ARCHITECT AND THE GENERAL CONTRACTOR.

LEGEND

SYMBOL	ABBREVIATION	DESCRIPTION
	S OR W	SOIL OR WASTE ABOVE FLOOR
	S OR W	SOIL OR WASTE BELOW FLOOR
	V	SANITARY VENT
AW	AW	ACID WASTE
AV	AV	ACID VENT
	CW	COLD WATER
	HW	HOT WATER
	HWR	HOT WATER RETURN
G	G	GAS
F	F	FIRE PROTECTION
MG	MG	MEDIUM PRESSURE GAS
XG	XG	EXISTING GAS
EG	XG	EXISTING GAS
CD	CD	CONDENSATE DRAIN
	SOV	SHUT OFF VALVE
	GC	GAS COCK
	XCO	EXISTING CLEANOUT
	FCO / COTG	FLOOR CLEANOUT / CLEANOUT TO GRADE
	COYB	CLEANOUT IN YARD BOX
	WCO	WALL CLEANOUT
		RISER UP
	DN.	RISER DOWN
	TP	TRAP PRIMER
		DIRECTION OF FLOW
	@	AT
	ABV.	ABOVE
	BAL. VA.	BALANCING VALVE
	BEL.	BELOW
	BFP	BACKFLOW PREVENTER
	CHK. VA.	CHECK VALVE
	CLG.	CEILING
	CONC.	CONCRETE
	CONN.	CONNECT OR CONNECTION
	CONT.	CONTINUATION
	DN.	DOWN
	(E)	EXISTING
	(N)	NEW
	(R)	REPLACE
	FIN.	FINISH OR FINISHED
	FLR.	FLOOR
	HDR.	HEADER
	I.E.	INVERT ELEVATION
	N/A	NOT APPLICABLE
	P.O.C.	POINT OF CONNECTION
	VA.	VALVE
	VTR	VENT THRU ROOF

EQUIPMENT ANCHORAGE

THE SEISMIC ANCHORAGE OF MECHANICAL AND ELECTRICAL EQUIPMENT SHALL CONFORM TO C.C.R. TITLE 24, 1998 CBC SECTION 1632A AND TABLE 161-O. ANCHORAGE DETAILS FOR ROOF/FLOOR MOUNTED EQUIPMENT SHALL BE SHOWN

UNLESS SPECIFICALLY SHOWN ON THESE PLANS, NO STRUCTURAL MEMBER SHALL BE CUT, NEITHER DRILLED NOR NOTCHED WITHOUT PRIOR WRITTEN AUTHORIZATION FROM THE STRUCTURAL ENGINEER AND THE DIVISION OF THE STATE ARCHITECT.

TABLE 1115B-1 SUGGESTED MOUNTING HEIGHTS
(1998 California Building Code Chap.11B, Div.1)

A = Adult Dimensions (age 12 and over)

DIMENSION	A (inches)
Toilet centering from wall	18
Toilet seat height/dimension to top of seat	17-19
Grab bar height (side)	33
Toilet paper in front of toilet	12 max.
Napkin disposal in front of toilet	12 max.
Dispenser or mirror height	40 max.
Lavatory/Sink top height	34 max.
Lavatory/Sink knee clearance	27 min.
Urinal lip height	17 max.
Urinal flush handle height	44 max.
Drinking fountain bubbler height	36 max.
Drinking fountain knee clearance	27 min.
ramp/stair handrail height	34-38

REVISED MAY 12 2004

IDENTIFICATION STAMP
DIV. OF THE STATE ARCHITECT
OFFICE OF REGULATION SERVICES
FILE NO. 19-H51
APPL. NO. 03-106434
AC. FLS. SS.
DATE

Dougherty ■ Dougherty
Architecture • Planning • Interior Design
3194-D Airport Loop Drive
Costa Mesa, CA 92626
(714) 427-1017

Copyright © 2002 Dougherty + Dougherty

FTA
831 S. Harbor Blvd.
Anaheim, CA 92805
Phone: (714) 772-0293
Fax: (714) 772-3789
Job Number: 22054

Architect Seal

Consultant Seal

LA MIRADA HIGH SCHOOL
MODERNIZATION
NORWALK - LA MIRADA UNIFIED SCHOOL DISTRICT
13520 ADELFA DRIVE LA MIRADA, CA 90638

PLUMBING SCHEDULES

Date: 04-01-04
Job: 20237.50
Scale:
Drawn:
Revisions:

P001

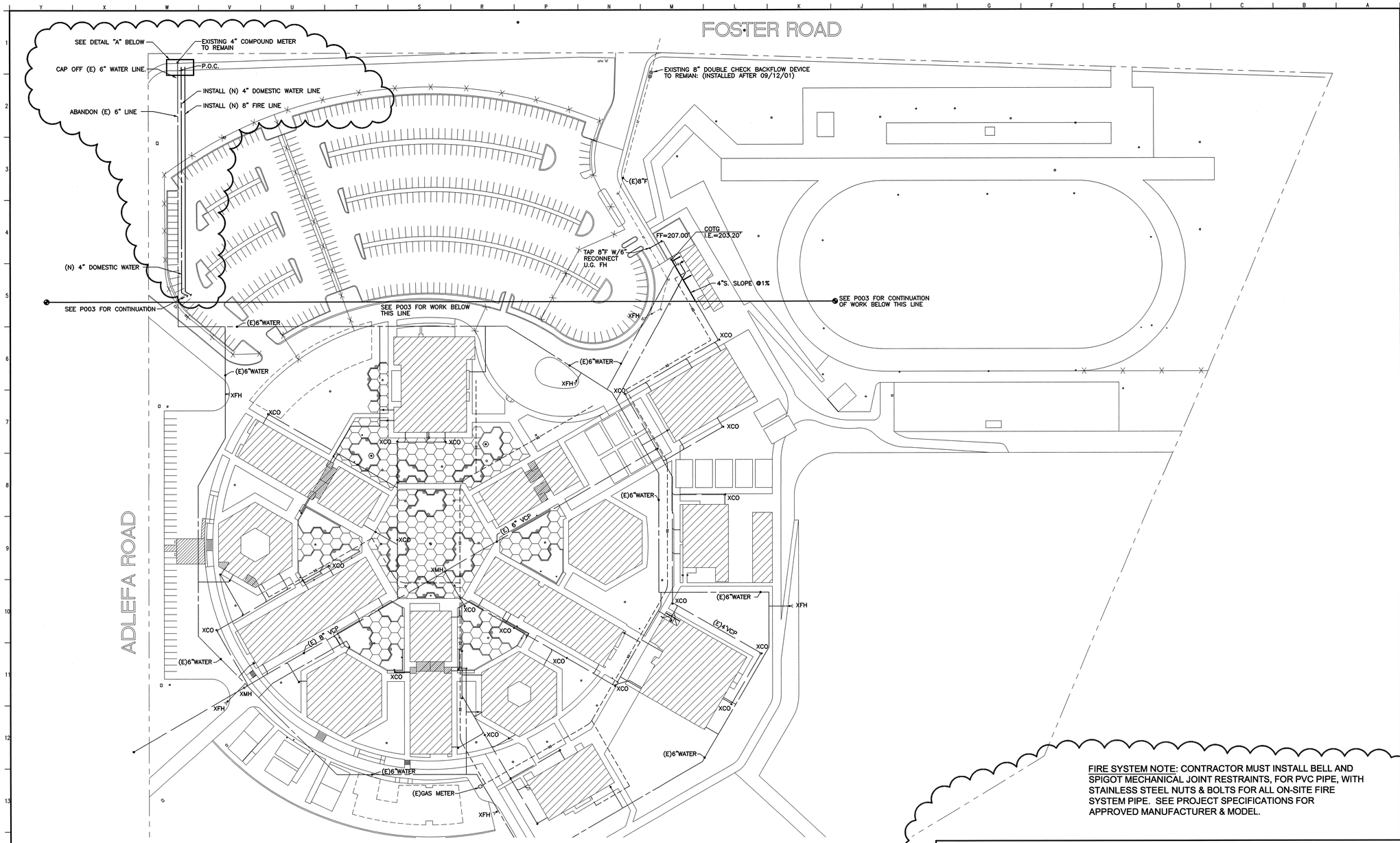

FIRE SYSTEM NOTE: CONTRACTOR MUST INSTALL BELL AND SPIGOT MECHANICAL JOINT RESTRAINTS, FOR PVC PIPE, WITH STAINLESS STEEL NUTS & BOLTS FOR ALL ON-SITE FIRE SYSTEM PIPE. SEE PROJECT SPECIFICATIONS FOR APPROVED MANUFACTURER & MODEL.

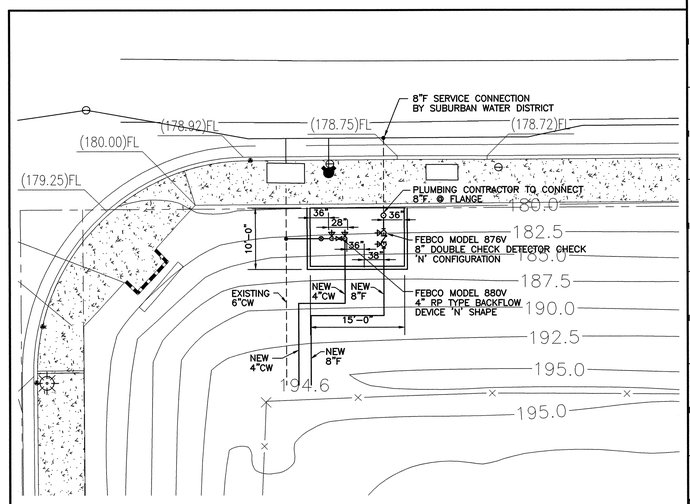

CONSTRUCTION NOTES

1. EXISTING 6" COMBINED DOMESTIC/FIRE SERVICE TO BE DISCONNECTED CAPPED OFF AND ABANDONED.
2. EXTEND EXISTING 8" FIRE LINE. REMOVE AND REPLACE EXISTING FIRE HYDRANTS, SEE SHEET P003.
3. INSTALL NEW 4" DOMESTIC LINE. REPLACE ALL IRRIGATION BACKFLOW DEVICES AND RECONNECT EXISTING IRRIGATION LINES.
4. REPLACE ALL EXISTING SANITARY SEWER PIPING FROM 2' OUTSIDE OF BUILDINGS TO EXISTING MANHOLES. REMOVE ANY SECTIONS OF EXISTING PIPING REQUIRED TO ACCOMMODATE NEW INSTALLATION. ABANDON ALL OTHERS IN PLACE.
5. EXISTING MEDIUM PRESSURE GAS PIPING RECENTLY INSTALLED TO REMAIN. MAKE CONNECTIONS AS SHOWN ON THESE PLANS AND AS OTHERWISE REQUIRED.

KEY PLAN

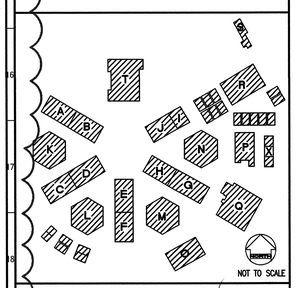

REVISED MAY 12 2004

IDENTIFICATION STAMP
DIV. OF THE STATE ARCHITECT
OFFICE OF REGULATION SERVICES
FILE NO. 19-H51
APPL. NO. 03-106434
AC. FLS. SS.
DATE

Dougherty ■ Dougherty
Architecture · Planning · Interior Design
3194-D Airport Loop Drive
Costa Mesa, CA 92626
(714) 427-0271

Copyright © 2002 Dougherty + Dougherty

FTA
F.T. Architects
831 S. Harbor Blvd.
Anaheim, CA 92805
Phone: (714) 772-0293
Fax: (714) 772-0788
Job Number: 02004

Architect Seal

Consultant Seal

LA MIRADA HIGH SCHOOL MODERNIZATION

NORWALK - LA MIRADA UNIFIED SCHOOL DISTRICT
13520 ADELFA DRIVE LA MIRADA, CA 90638

PLUMBING SITE PLAN

Date:	04-01-04
Job:	20237.50
Scale:	1"=60'-0"
Drawn:	
Revisions:	

P002

SITE PLAN 1 SCALE: 1"=60'

SERVICE CONNECTION DETAIL A SCALE: 1"=10'

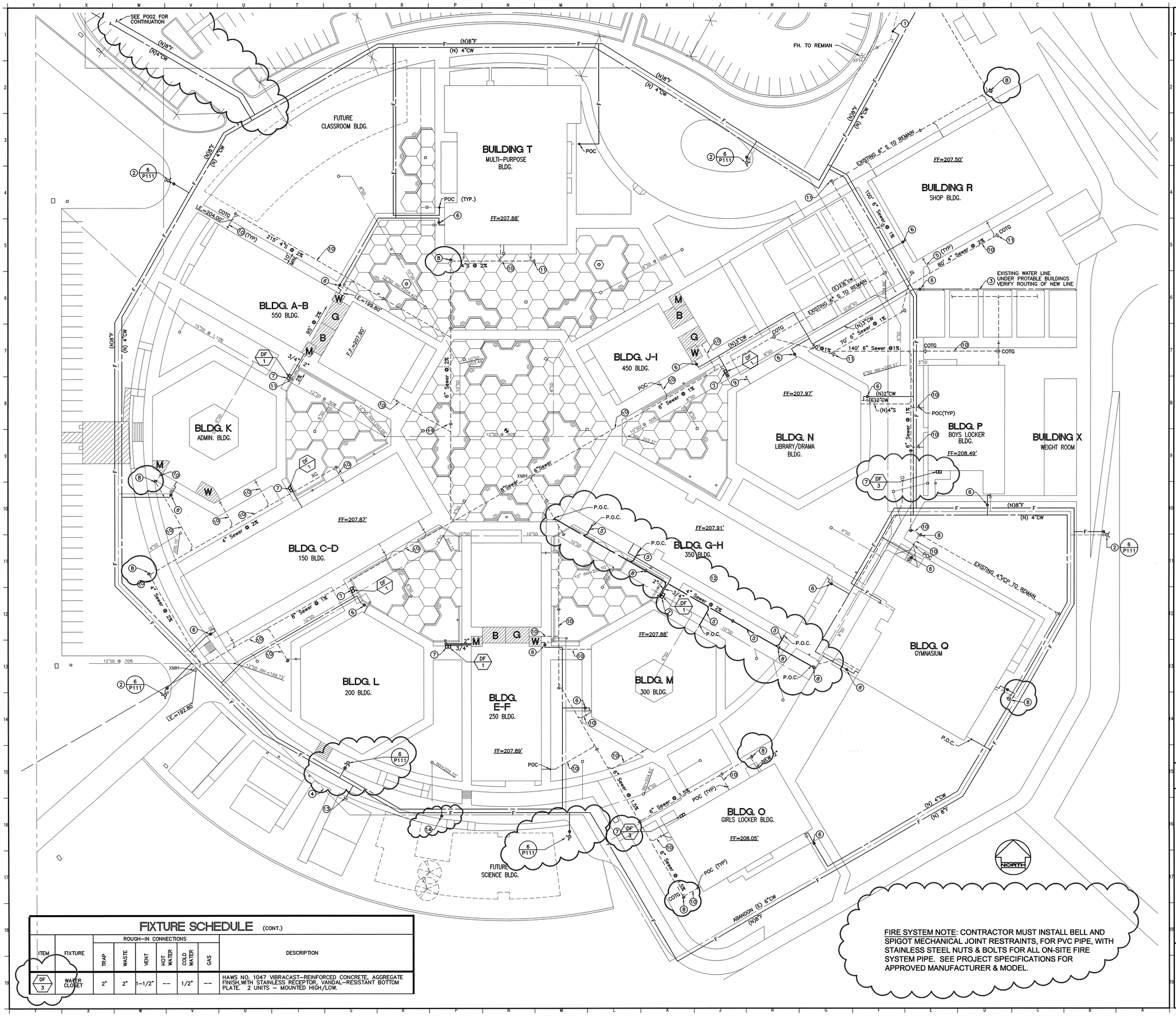

FIRE SYSTEM NOTE: CONTRACTOR MUST INSTALL BELL AND SPIGOT MECHANICAL JOINT RESTRAINTS, FOR PVC PIPE, WITH STAINLESS STEEL NUTS & BOLTS FOR ALL ON-SITE FIRE SYSTEM PIPE. SEE PROJECT SPECIFICATIONS FOR APPROVED MANUFACTURER & MODEL.

FIXTURE SCHEDULE (CONT.)

ITEM	FIXTURE	ROUGH-IN CONNECTIONS						DESCRIPTION
		TRAP	WASTE	VENT	HOT WATER	COLD WATER	GAS	
DF 3	WATER CLOSET	2"	2"	1-1/2"	--	1/2"	--	HAWS NO. 1047 VIBRACAST-REINFORCED CONCRETE, AGGREGATE FINISH, WITH STAINLESS RECEPTOR, VANDAL-RESISTANT BOTTOM PLATE. 2 UNITS - MOUNTED HIGH/LOW.

1. INTERCEPT AND EXTEND EXISTING 8" FIRE LINE.
2. INSTALL NEW FIRE HYDRANT IN PLACE OF EXISTING.
3. INSTALL NEW DOMESTIC WATER SERVICE LINE.
4. REMOVE EXISTING WATER PIPING AS NECESSARY TO ACCOMMODATE INSTALLATION OF NEW DOMESTIC WATER AND FIRE LINES. OTHERWISE ABANDON IN PLACE.
5. REMOVE EXISTING SANITARY SEWER LINE AND REPLACE WITH NEW. MATCH EXISTING SIZE, DEPTH AND GRADE.
6. INSTALL FULL SIZE SOV IN CONC. YARD BOX WHERE NOTED OR SHOWN BY SYMBOL
7. REMOVE EXISTING DRINKING FOUNTAIN COMPLETE INSTALL NEW DF IN PLACE OF EXISTING. INCLUDE ALL CONCRETE WORK DEMO & NEW INCLUDE ALL NECESSARY PIPING & HARDWARE COORDINATE W/ GENERAL CONTRACTOR.
8. INSTALL CLEANOUTS WHERE NOTED OR SHOWN BY SYMBOL OR REQUIRED BY CODE.
9. EXISTING TO BE CAPPED AND ABONDAND IN PLACE.
10. EXISTING SEWER TO REMAIN.
11. EXISTING CLEANOUT TO REMAIN.
12. ALL EXISTING SITE SEWER LINES TO REMAIN WITH EXCEPTION OF AREA INDICATED. REPLACE EXISTING WITH NEW.
13. 6"STUB-OUT FOR FUTURE FIRE LINE CONNECTION.
14. 3"STUB-OUT FOR FUTURE WATER LINE CONNECTION.

KEY PLAN

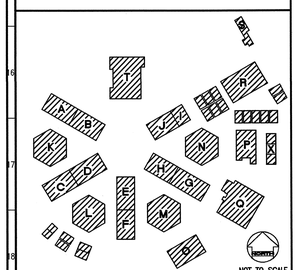

REVISED MAY 12 2004

IDENTIFICATION STAMP
DIV. OF THE STATE ARCHITECT
OFFICE OF REGULATION SERVICES
FILE NO. 19-H51
APPL. NO. 03-106434
AC.____ FLS. NL SS.____
DATE____

Dougherty + Dougherty
Architecture · Planning · Interior Design
3536 Concours, Suite 100
Costa Mesa, CA 92626
(714) 427-0277

Copyright © 2002 Dougherty + Dougherty

FTA
Fire Technology
631 S. Harbor Blvd.
Anaheim, California 92805
Phone (714) 772-9293
Fax (714) 772-9295
Job Number: 22084

Architect Seal

Consultant Seal

LA MIRADA HIGH SCHOOL MODERNIZATION
NORWALK - LA MIRADA UNIFIED SCHOOL DISTRICT
13520 ADELFA DRIVE LA MIRADA, CA 90638

PLUMBING SITE PLAN

Date:	04-01-04
Job:	20237.50
Scale:	1"=30'-0"
Drawn:	
Revisions:	

P003

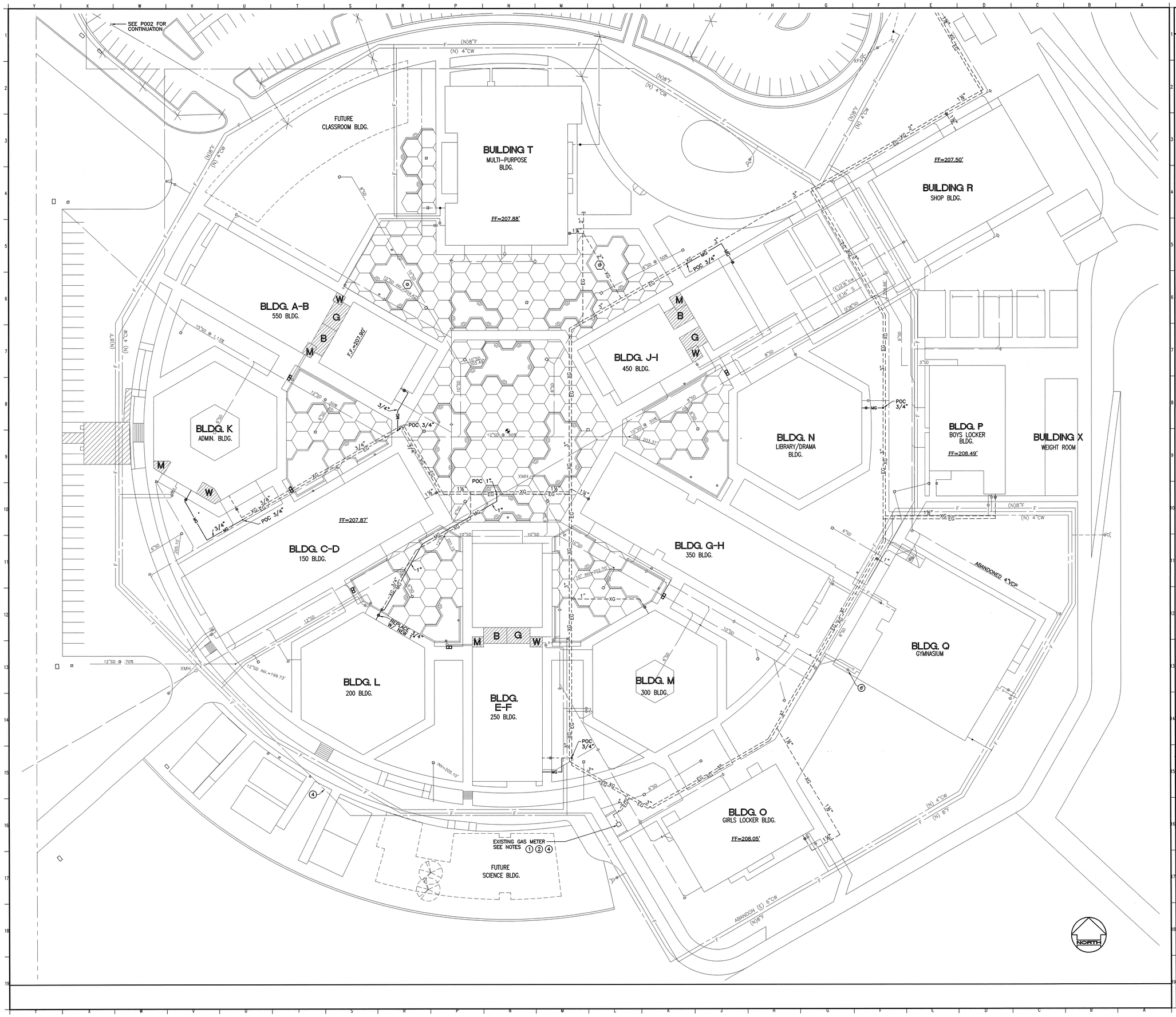

NOTE:

1. COORDINATE WITH THE GAS COMPANY TO INCREASE DELIVERY PRESSURE AT THE EXISTING METER.
2. EXISTING REGULATORS IN MONITOR SET, SHALL BE ADJUSTED OR CHANGED OUT BY THE GAS COMPANY AT THEIR DISCRETION, TO INCREASE LINE PRESSURE FROM 2 PSI TO 5 PSI ON HOUSE SIDE OF METER.
3. INSTALL SEISMIC GAS SHUT-OFF VALVE. PACIFIC SEISMIC MODEL 316 ON HOUSE SIDE OF METER SET.
4. WHERE EXISTING GPR'S ARE BEING REPLACED INSIDE INSTALL REDUCER/INCREASER FITTINGS AS NEEDED. RECONNECT ALL EXISTING REGULATOR VENTS.
5. EXISTING POLYETHELENE "EG" GAS PIPING PREVIUOSLY INSTALLED TO REPLACE OLD STEEL "XG" PIPING WAS NOT PROPERLY DOCUMENTED BY THE INSTALLING CONTRACTOR. LINES DESIGNATED "EG" ARE BASED ON A HAND DRAWN 8½ X 11 SKETCH PROVIDED TO THE SCHOOL DISTRICT BY THE CONTRACTOR. ACTUAL LOCATIONS OF POC'S MUST BE FIELD VERIFIED.

LEGEND:

---XG--- 1¼"	EXISTING STEEL GAS PIPING BELOW GRADE. PART OF ORIGINAL (1959) GAS DISTRIBUTION SYSTEM: 2 PSI W/DROP TO 1.5 PSI LINE SIZE NOTED.
---EG---	EXIST'G POLYETHELENE GAS PIPING INSTALLED IN YEAR 2000. ACTUAL LOCATIONS AND LINE SIZES MUST BE FIELD VERIFIED. 2 PSI W/DROP TO 1.5 PSI
——MG——	NEW MEDIUM PRESSURE GAS PIPING TO BE INSTALLED UNDER THIS CONTRACT: PRESSURE = 5 PSI
C.F.H.	CUBIC FEET PER HOUR
T.D.L.	TOTAL DEVELOPED LENGTH
PSI	POUNDS PER SQUARE INCH
"W.C.	INCHES OF WATER COLUMN
GPR	GAS PRESSURE REULATOR

GAS DISTRIBUTION SCHEDULE:

BUILDING	EXISTING C.F.H.	NEW GPR	NEW C.F.H.	SIZE "W.C.	INSIDE BLDG. T.D.L.	SIZE PSI	DISTANCE TO METER
A–B 550	0	GPR 1	800	2"	200'	3/4"	520'
C–D 150	2000	GPR 1	1080	2"	200'	1"	425'
E–F 550	0	GPR 1	720	2"	200'	3/4"	340'
G–H 350	1500	GPR 1	800	2"	200'	3/4"	110'
J–I 450	0	GPR 2	480	1½"	150'	3/4"	625'
K 100	72	GPR 2	400	1¼"	50'	3/4"	665'
L 200'	215	GPR 1	840	2"	150'	1"	580'
M 300	440	GPR 1	880	2½"	220'	3/4"	300'
N 400	0	GPR 1	500	2"	150'	3/4"	300'
O 600	2000	GPR 3	1060	2½"	160'	3/4"	330'
P 700	2065	GPR 1	698	2"	150'	3/4"	520'
Q GYM	850	GPR 1	850	2½"	–	3/4"	345'
R 750	1547	GPR 1	872	2½"	200'	1"	820'
S 800	160	GPR 4	160	1¼"	200'	3/4"	950'
T 500	1151	GPR 1	907	2½"	200'	3/4"	600'

GAS REGULATOR SCHEDULE:

GAS PRESS. REG.	MFR. MODEL	INLET SIZE	OUTLET SIZE	ORIFICE SIZE	INLET PRESS.	OUTLET PRESS.
GPR 1	AMERICAN 1813C	3/4"	1¼"	1/4"	5 PSI	8"W.C.
GPR 2	↓	3/4"	1¼"	3/16"	↓	↓
GPR 3	↓	3/4"	1¼"	5/16"	↓	↓
GPR 4	↓	3/4"	1¼"	1/8x3/16	↓	↓

KEY PLAN

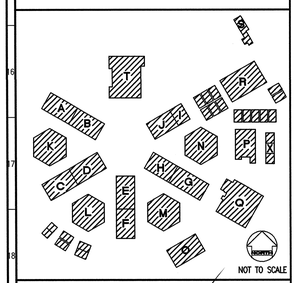

REVISED MAY 12 2004

IDENTIFICATION STAMP
DIV. OF THE STATE ARCHITECT
OFFICE OF REGULATION SERVICES
FILE NO. 19-H51
APPL. NO. 03-106434
AC.____ FLS. NLT SS.____
DATE____

Dougherty ■ Dougherty
Architecture · Planning · Interior Design
3536 Concours, Suite 100
Ontario, CA 91764
(714) 427-0277

Copyright © 2002 Dougherty + Dougherty

FTA
Fire Technology, Inc.
831 S. Hope Blvd.
Anaheim, CA 92805
Phone: (714) 772-9393
Fax: (714) 772-9399
Job Number: 23084

Architect Seal

Consultant Seal

LA MIRADA HIGH SCHOOL MODERNIZATION

NORWALK - LA MIRADA UNIFIED SCHOOL DISTRICT
13520 ADELFA DRIVE LA MIRADA, CA 90638

GAS DISTRIBUTION SITE PLAN

Date:	04-01-04
Job:	20237.50
Scale:	1"=30'-0"
Drawn:	
Revisions:	

P004

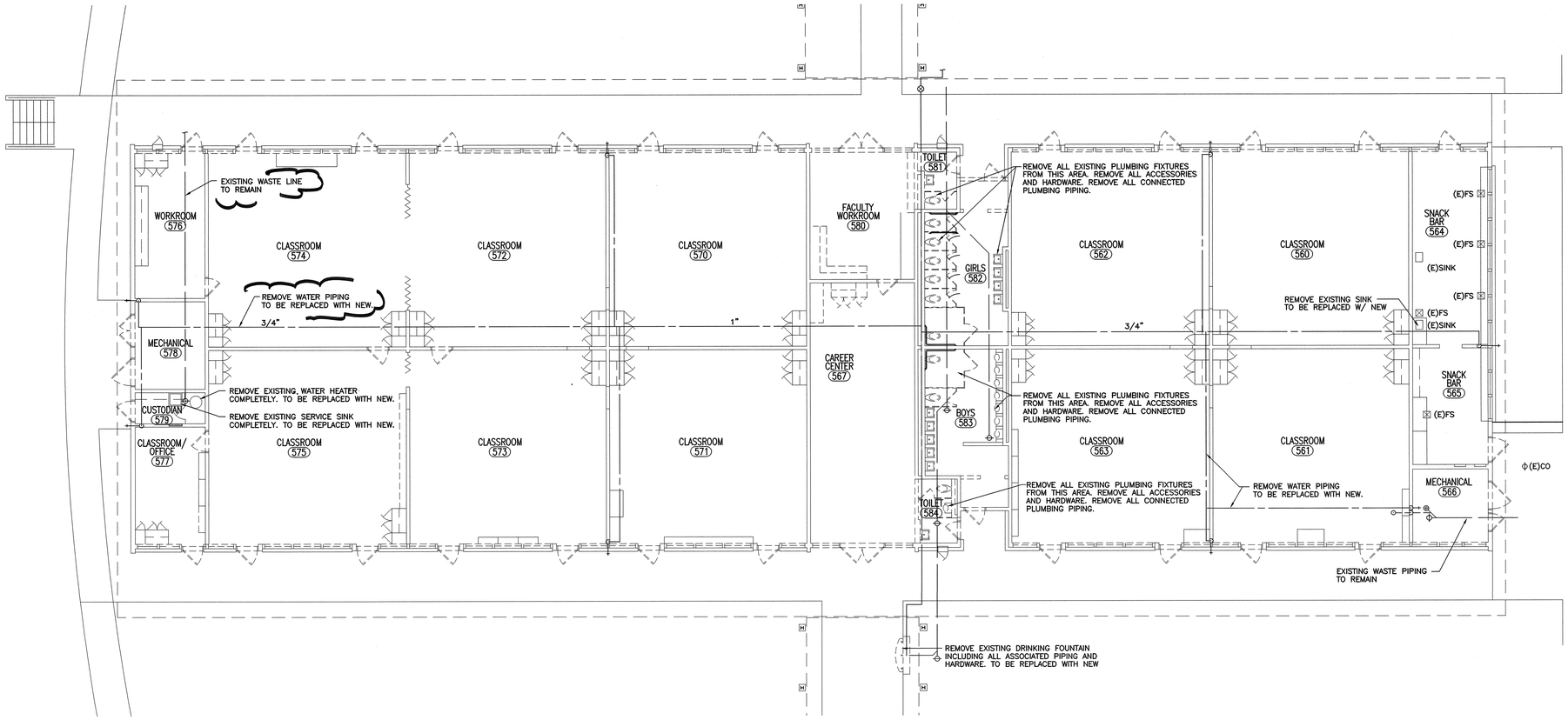

BUILDINGS A & B DEMOLITION PLANS

1
1/8"=1'-0"

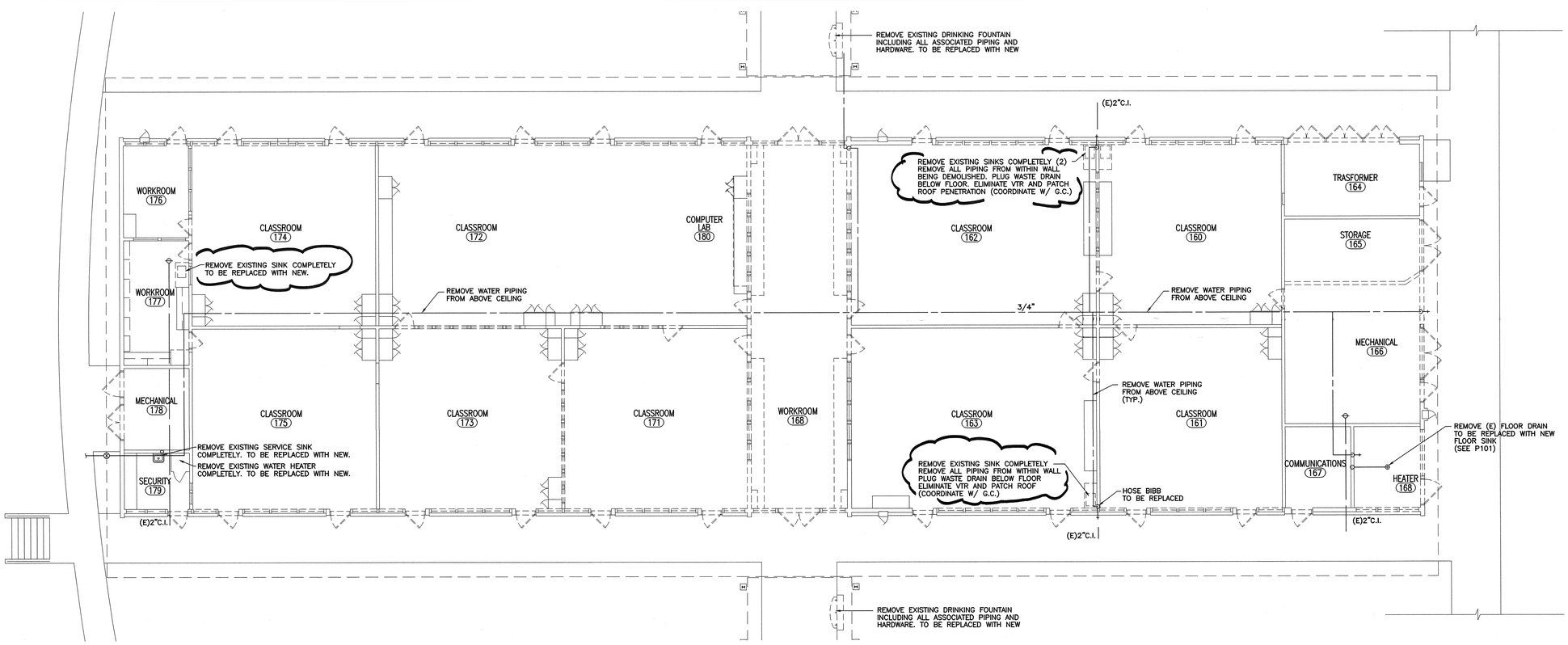

BUILDINGS C & D DEMOLITION PLANS

1
1/8"=1'-0"

KEY PLAN

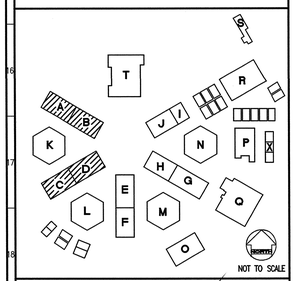

REVISED MAY 12 2004

IDENTIFICATION STAMP
DIV. OF THE STATE ARCHITECT
OFFICE OF REGULATION SERVICES
FILE NO. 19-H51
APPL. NO. 03-106434
AC. ____ FLS. ____ SS. ____
DATE ____

Dougherty ■ Dougherty
Architecture • Planning • Interior Design
3194-D Airport Loop Drive
Costa Mesa, CA 92626
(714) 427-0277

Copyright © 2002 Dougherty + Dougherty

FTA
831 S. Harbor Blvd.
Fullerton, CA 92832
Phone (714) 773-2983
Fax (714) 773-2989
Job Number 23054

Architect Seal

Consultant Seal

LA MIRADA HIGH SCHOOL
MODERNIZATION
NORWALK - LA MIRADA UNIFIED SCHOOL DISTRICT
13520 ADELFA DRIVE LA MIRADA, CA 90638

CLSRMS A, B, C, & D
PLUMBING
DEMOLITION PLANS

Date:	04-01-04
Job:	20237.50
Scale:	1/8" = 1'
Drawn:	
Revisions:	

PD101

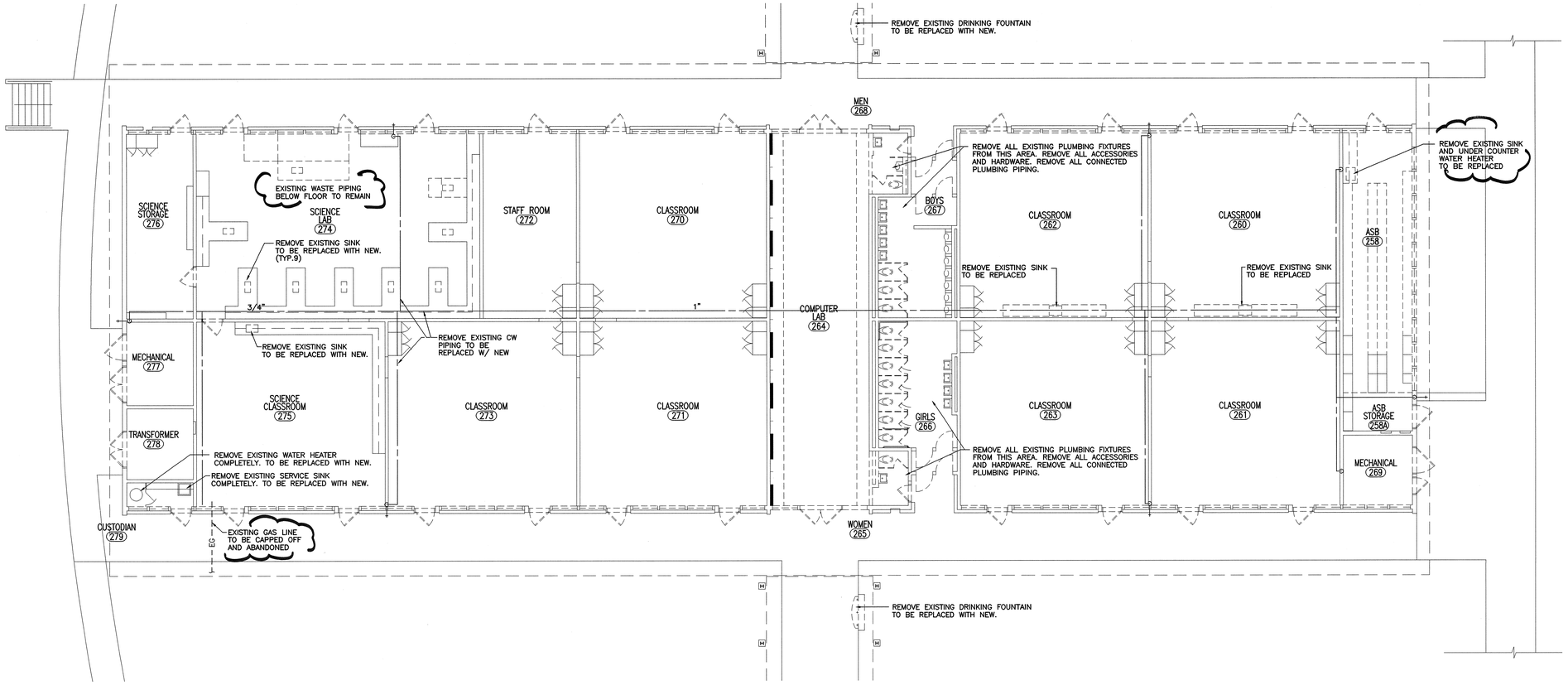

BUILDINGS E & F DEMOLITION PLANS

1
1/8"=1'-0"

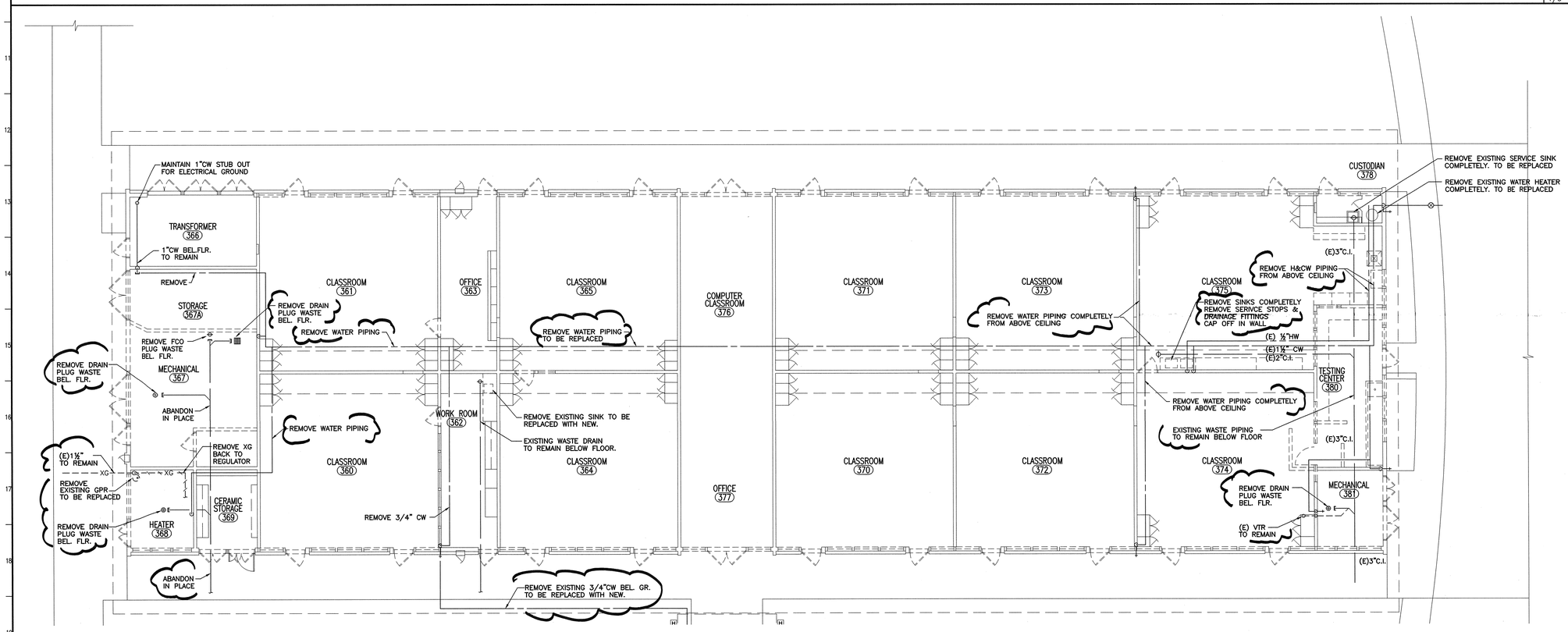

BUILDINGS G & H DEMOLITION PLANS

1
1/8"=1'-0"

KEY PLAN

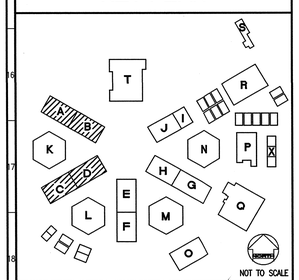

REVISED MAY 1 2 2004

IDENTIFICATION STAMP
DIV. OF THE STATE ARCHITECT
OFFICE OF REGULATION SERVICES
FILE NO. 19-H51
APPL. NO. 03-106434
AC.___ FLS. N/A SS.___
DATE___

Dougherty ■ Dougherty
Architecture • Planning • Interior Design
2355 Main Street, Suite 200
Irvine, CA 92614
(714) 427-0277

Copyright © 2002 Dougherty + Dougherty

FTA
Fast Architects
838 S. Hope Blvd.
Anaheim, CA 92805
Phone (714) 772-9383
Fax (714) 772-9389
Job Number 2304

Architect Seal

Consultant Seal

LA MIRADA HIGH SCHOOL MODERNIZATION

NORWALK - LA MIRADA UNIFIED SCHOOL DISTRICT
13520 ADELFA DRIVE LA MIRADA, CA 90638

CLSRMS E, F, G, & H
PLUMBING
DEMOLITION PLANS

Date:	04-01-04
Job:	20237.50
Scale:	1/8" = 1'
Drawn:	
Revisions:	

PD102

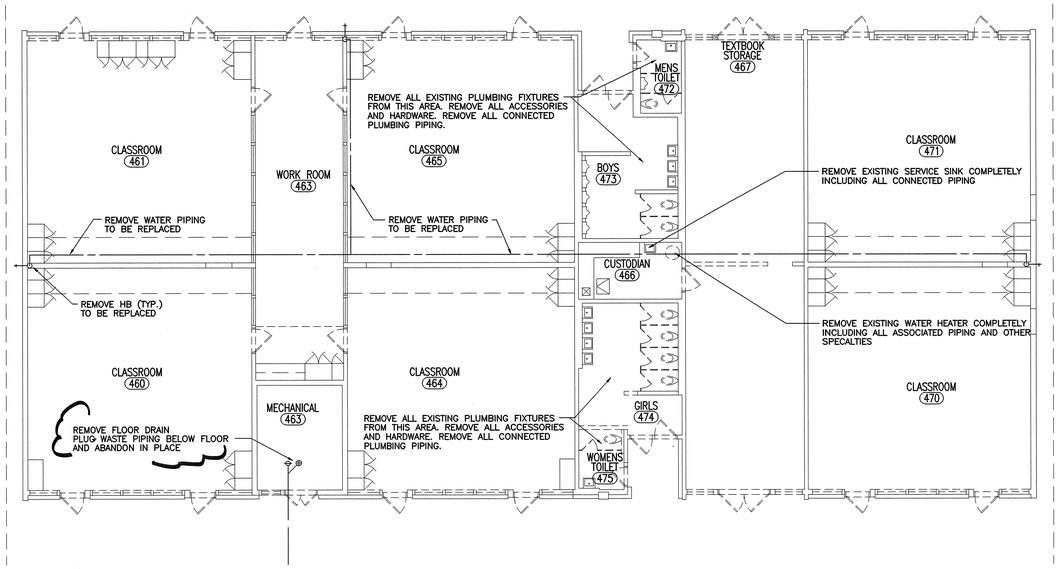

BUILDINGS I, & J DEMOLITION PLANS

1

1/8"=1'-0"

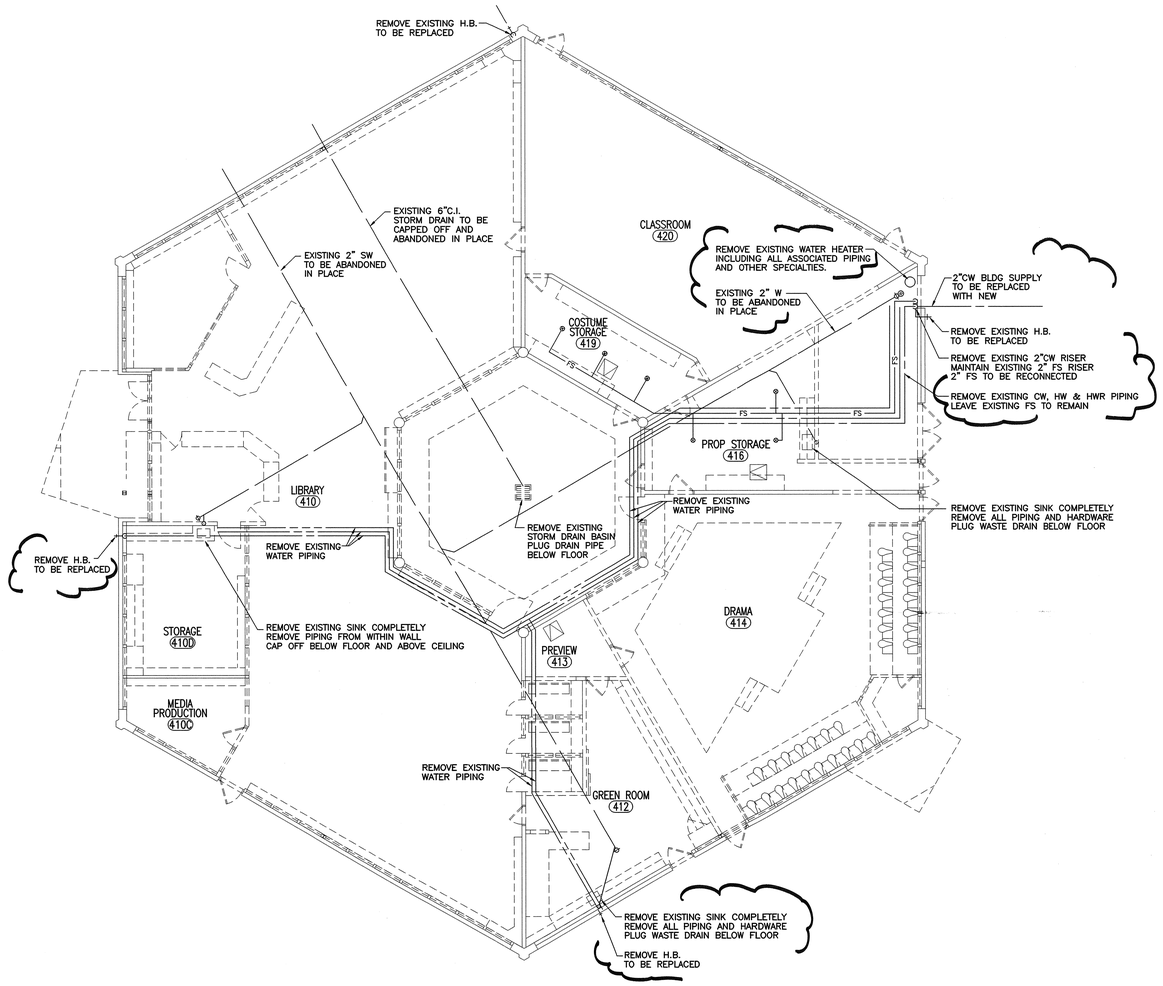

BUILDING N DEMOLITION PLAN

1

1/8"=1'-0"

KEY PLAN

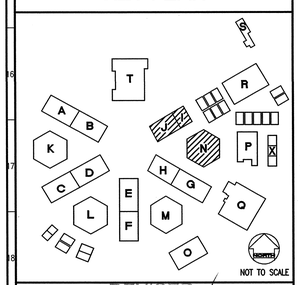

REVISED MAY 1 2 2004

IDENTIFICATION STAMP
DIV. OF THE STATE ARCHITECT
OFFICE OF REGULATION SERVICES
FILE NO. 19-H51
APPL. NO. 03-106434
AC. ____ FLS. NC SS. ____
DATE ____

Dougherty + Dougherty
Architecture · Planning · Interior Design
3194-D Airport Loop Drive
Costa Mesa, CA 92626
(714) 427-0277

Copyright © 2002 Dougherty + Dougherty

FTA
Fleischer Tarzian Architects
831 S. Hepburn Blvd.
Anaheim, CA 92805
Phone: (714) 772-9393
Fax: (714) 772-6769
Job Number: 22004

Architect Seal

Consultant Seal

LA MIRADA HIGH SCHOOL MODERNIZATION
NORWALK - LA MIRADA UNIFIED SCHOOL DISTRICT
13520 ADELFA DRIVE LA MIRADA, CA 90638

CLSRMS I, J, & N PLUMBING DEMOLITION PLANS

Date:	04-01-04
Job:	20237.50
Scale:	1/8" = 1'
Drawn:	
Revisions:	

PD103

DEMOLITION NOTES BLDG. L:

1. REMOVE EXISTING PLUMBING FIXTURE TO BE REPLACED WITH NEW. MAINTAIN EXISTING WASTE & VENT. REMOVE WATER PIPING TO BE REPLACED.
2. REMOVE EXISTING PLUMBING FIXTURE COMPLETLEY. REMOVE ALL PIPING ABOVE FLOOR. REMOVE WATER & GAS PIPING BELOW FLOOR TO BE REPLACED WITH NEW
3. REMOVE SECTION OF WASTE PIPING BELOW FLOOR TO BE REPLACED WITH NEW. SEE P104.1
4. REMOVE EXISTING RP TYPE BACKFLOW PREVENTER MOUNTED HIGH ON WALL. TO BE REPLACED.
5. REMOVE EXISTING HOSE BIBB TO BE REPLACED WITH NEW.
6. REMOVE PIPING FROM BELOW COUNTER AND FROM INSIDE OF CABINETRY REOMVE ALL GAS TURRETS.
7. REMOVE EXISTING WATER HEATER TO BE REPLACED WITH NEW.
8. REMOVE EXISTING GAS REGULATOR TO BE REPLACED WITH NEW.
9. REMOVE EXISTING FLOOR DRAIN COMPLETELY. PLUG FIXTURE DRAIN BEL. FLOOR.

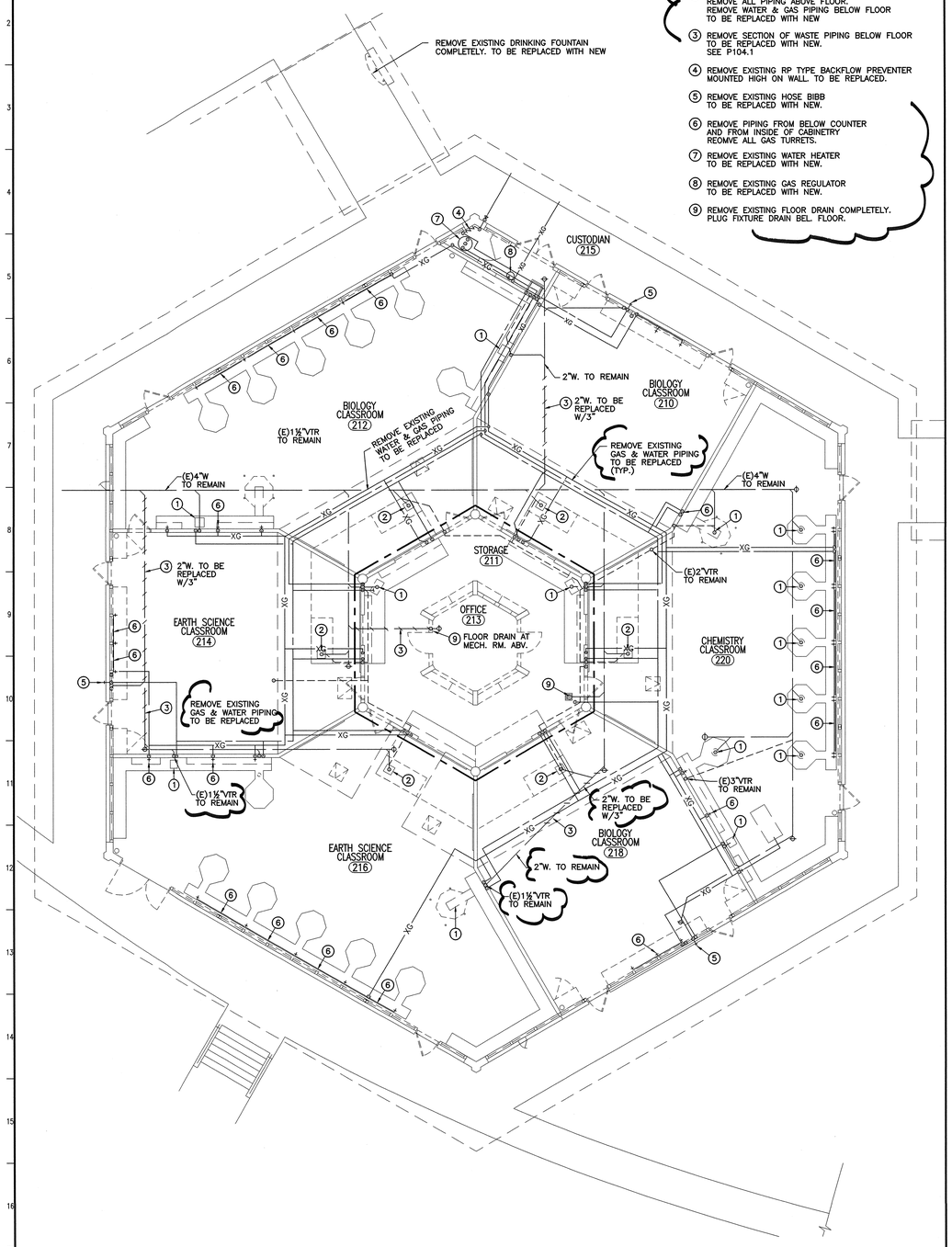

BUILDING L DEMOLITION PLAN — 2 — 1/8"=1'-0"

DEMOLITION NOTES BLDG. M:

1. REMOVE EXISTING PLUMBING FIXTURE TO BE REPLACED WITH NEW. MAINTAIN EXISTING WASTE & VENT. REMOVE WATER PIPING TO BE REPLACED.
2. REMOVE EXISTING PLUMBING FIXTURE COMPLETLEY. REMOVE ALL PIPING FROM WITHIN WALL BEING DEMOLISHED. REMOVE FIXTURE DRAIN AND PLUG WASTE PIPE BELOW FLOOR. CAP OFF VENT PIPE ABOVE CLG.
3. REMOVE EXISTING PLUMBING FIXTURE COMPLETLEY. REMOVE ALL PIPING ABOVE FLOOR & CAP OFF BELOW SLAB.
4. REMOVE EXISTING PLUMBING FIXTURE COMPLETLEY. REMOVE WATER PIPING. REMOVE FIXTURE DRAIN AND PLUG WASTE PIPE BELOW FLOOR.
5. REMOVE EXISTING HOSE BIBB TO BE REPLACED WITH NEW.
6. REMOVE PIPING FROM BELOW COUNTER AND FROM INSIDE OF CABINETRY
7. REMOVE EXISTING WATER HEATER TO BE REPLACED WITH NEW.
8. REMOVE EXISTING GAS REGULATOR TO BE REPLACED WITH NEW.
9. REMOVE EXISTING FLOOR SINK AND WASTE PIPING TO BE REPLACED WITH NEW.

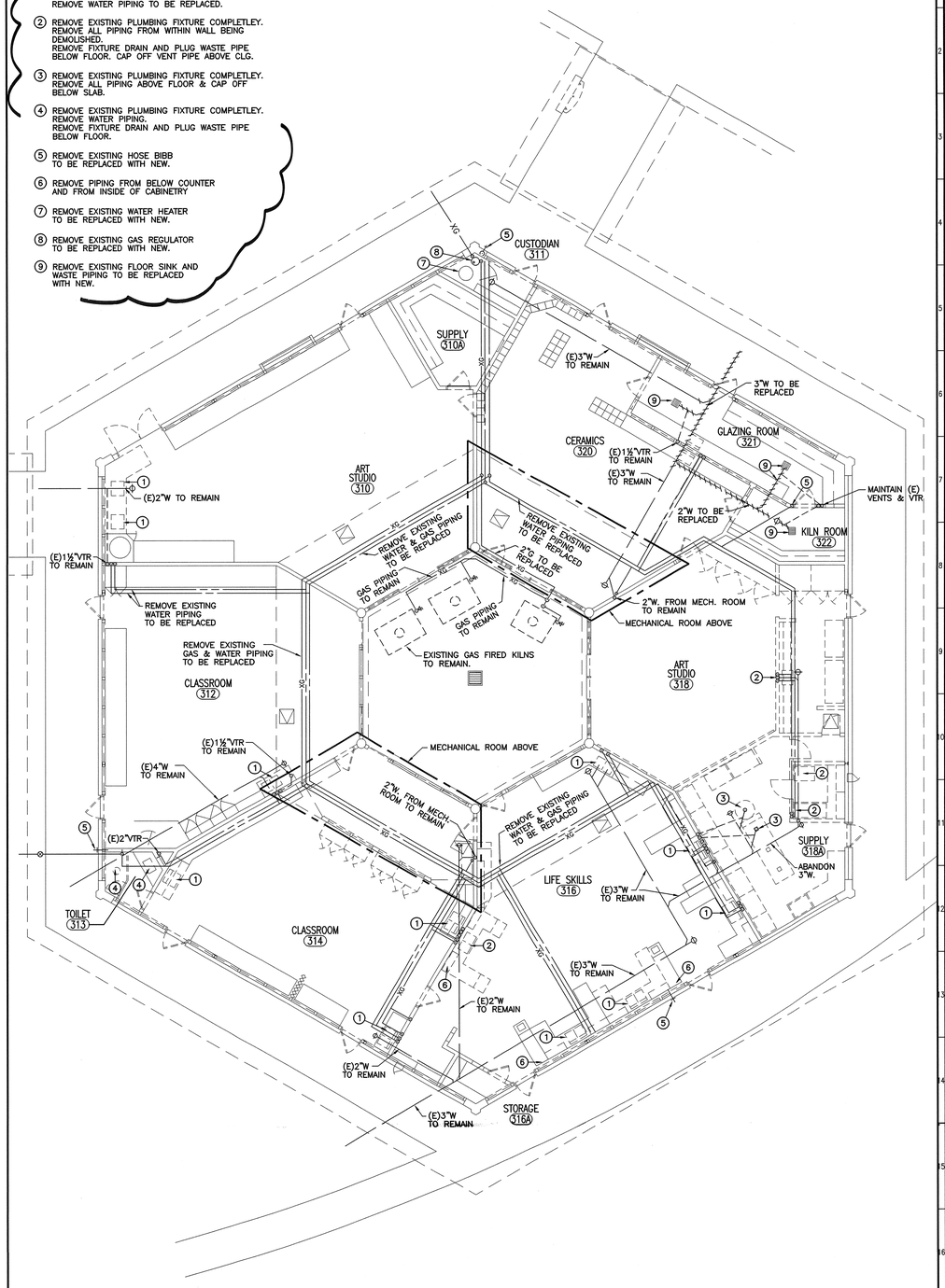

BUILDING M DEMOLITION PLAN — 1 — 1/8"=1'-0"

NOTE:

ALL WATER & GAS PIPING WITHIN THE BUILDING TO BE REMOVED AND REPLACED WITH NEW.

EXISTING WASTE & VENT PIPING TO REMAIN UNLESS OTHERWISE NOTED.

KEY PLAN

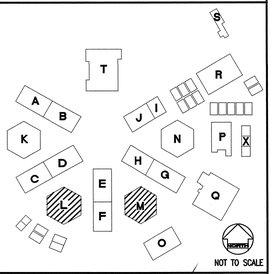

REVISED MAY 12 2004

IDENTIFICATION STAMP
DIV. OF THE STATE ARCHITECT
OFFICE OF REGULATION SERVICES
FILE NO. 19-H51
APPL. NO. 03-106434
AC. ____ FLS. ____ SS ____
DATE ____

Dougherty ■ Dougherty
Architecture • Planning • Interior Design
3194-D Airport Loop Drive
Costa Mesa, CA 92626
(714) 427-0277

Copyright © 2002 Dougherty + Dougherty

FTA
F.T. Architects
831 S. Harbor Blvd.
Anaheim, CA 92805
Phone: (714) 772-3933
Fax: (714) 772-3938
Job Number: 22094

Architect Seal

Consultant Seal

LA MIRADA HIGH SCHOOL
MODERNIZATION
NORWALK - LA MIRADA UNIFIED SCHOOL DISTRICT
13520 ADELFA DRIVE LA MIRADA, CA 90638

CLSRMS L & M
PLUMBING
DEMOLITION PLANS

Date:	04-01-04
Job:	20237.50
Scale:	1/8" = 1'
Drawn:	
Revisions:	

PD104

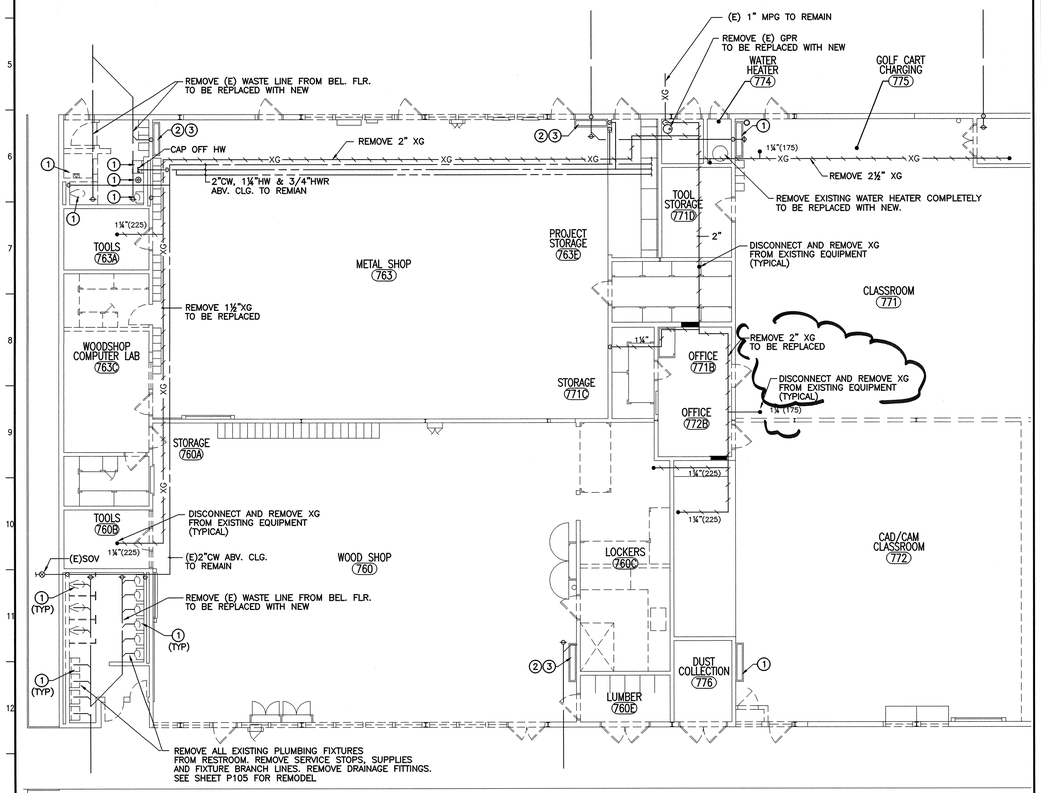

BUILDING R DEMOLITION PLAN — 2 — 1/8"=1'-0"

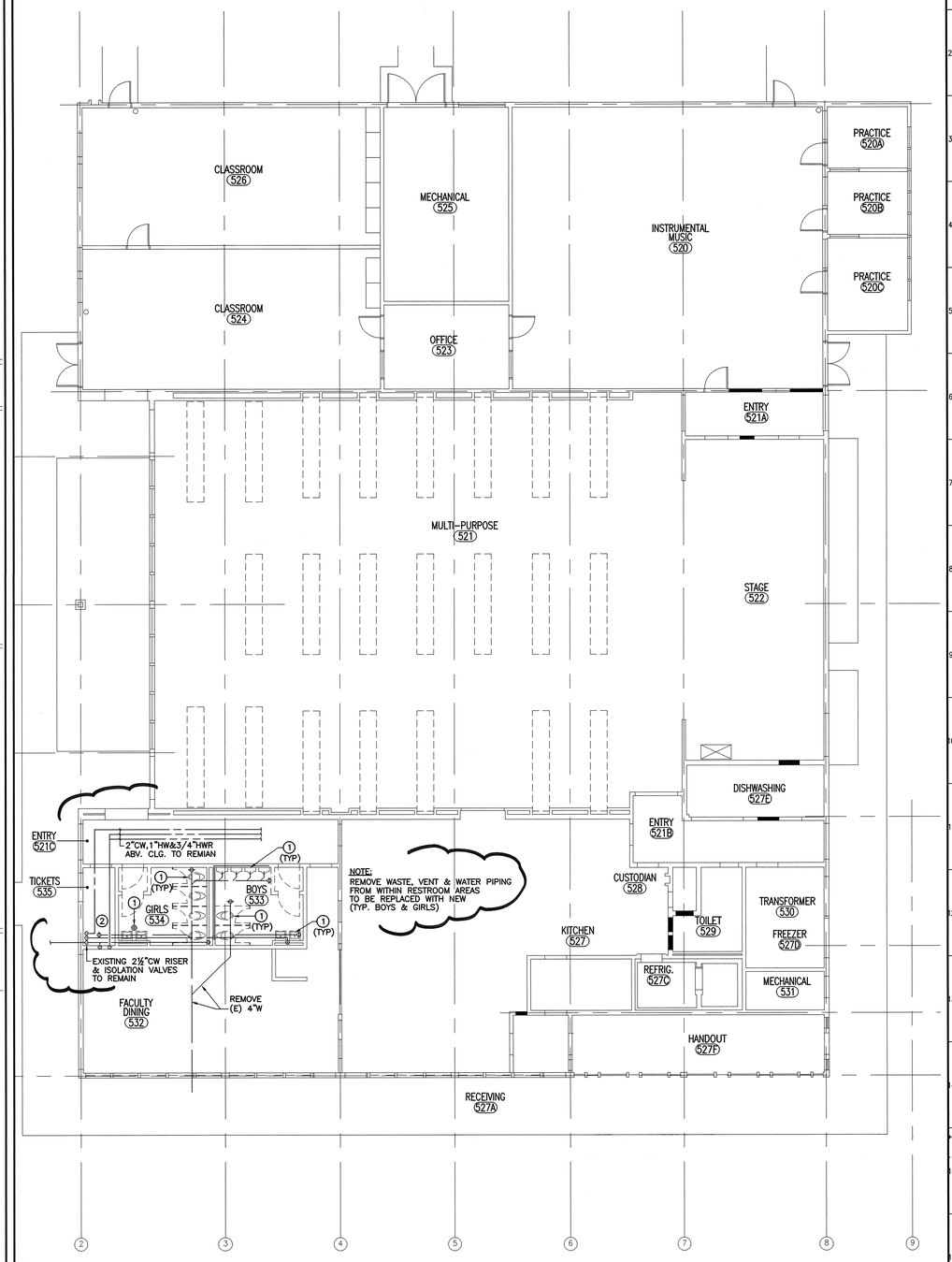

BUILDING T DEMOLITION PLAN — 1 — 1/8"=1'-0"

DEMOLITION NOTES

1. REMOVE EXISTING PLUMBING FIXTURE REMOVE SUPPLY STOPS, FIXTURE BRANCH AND DRAINAGE FITTINGS COMPLETELY.
2. EXISTING PLUMBING FIXTURE TO REMAIN
3. REMOVE (E) FAUCETS TO BE RELPACED

KEY PLAN

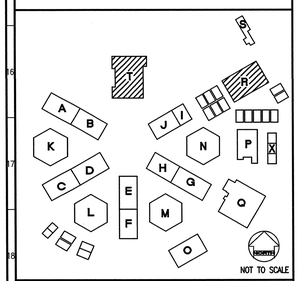

REVISED MAY 12 2004

IDENTIFICATION STAMP
DIV. OF THE STATE ARCHITECT
OFFICE OF REGULATION SERVICES
FILE NO. 19-H51
APPL. NO. 03-106434
AC.____ FLS. NC SS.____
DATE.____

Dougherty ■ Dougherty
Architecture · Planning · Interior Design
3194-D Airport Loop Drive
Costa Mesa, CA 92626
(714) 425-0227
(714) 427-2628

Copyright © 2002 Dougherty + Dougherty

FTA
Fullerton Technical Associates
831 S. Harbor Blvd.
Anaheim, CA 92805
Phone: (714) 776-9969
Fax: (714) 772-8788
Job Number: 22004

Architect Seal

Consultant Seal

LA MIRADA HIGH SCHOOL
MODERNIZATION
NORWALK - LA MIRADA UNIFIED SCHOOL DISTRICT
13520 ADELFA DRIVE LA MIRADA, CA 90638

CLASSROOMS R & T
PLUMBING
DEMOLITION PLANS

Date:	04-01-04
Job:	20237.50
Scale:	1/8" = 1'
Drawn:	
Revisions:	

PD105

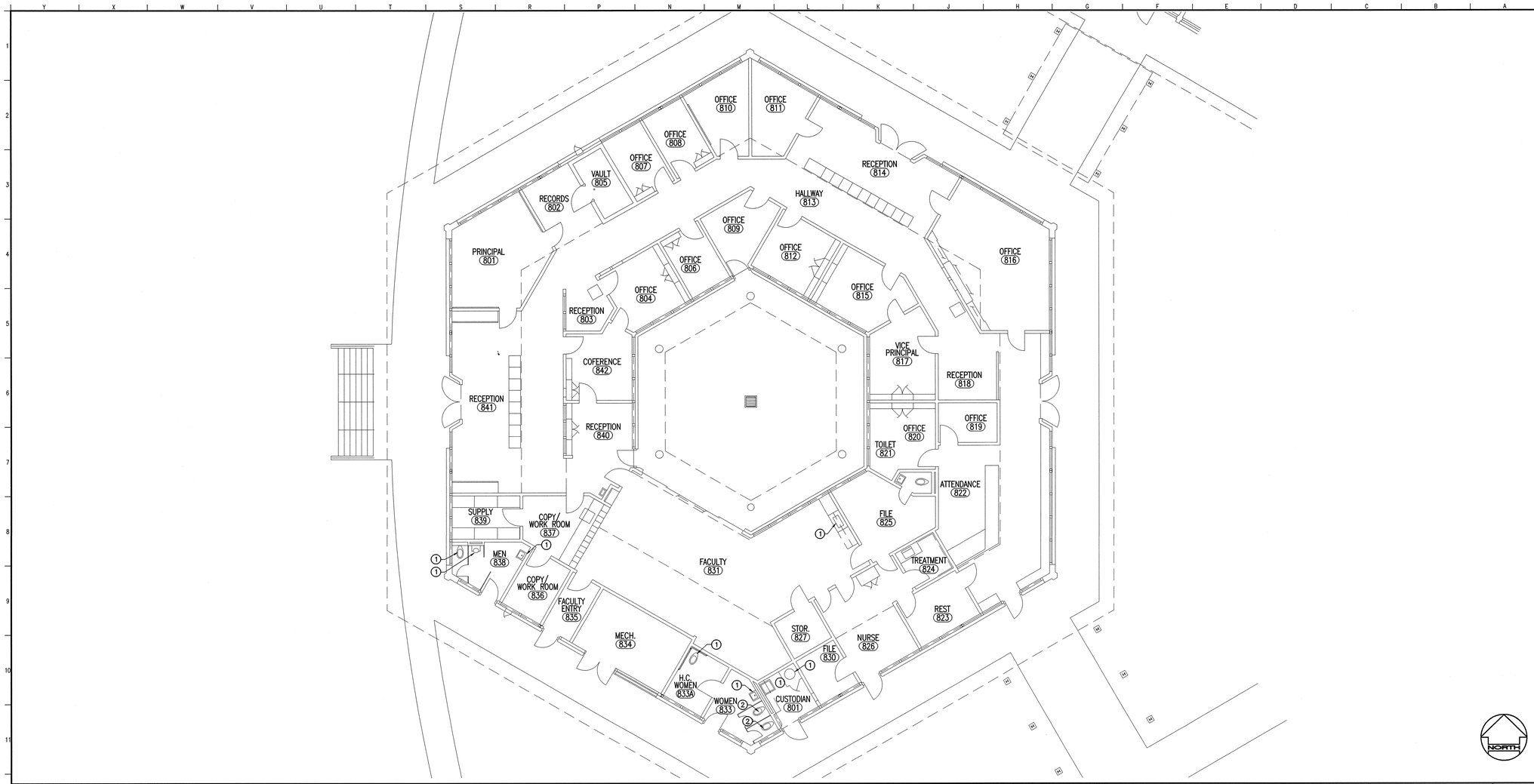

BUILDING K DEMOLITION PLAN

ADMINISTRATION BUILDING

1 — 1/8"=1'-0"

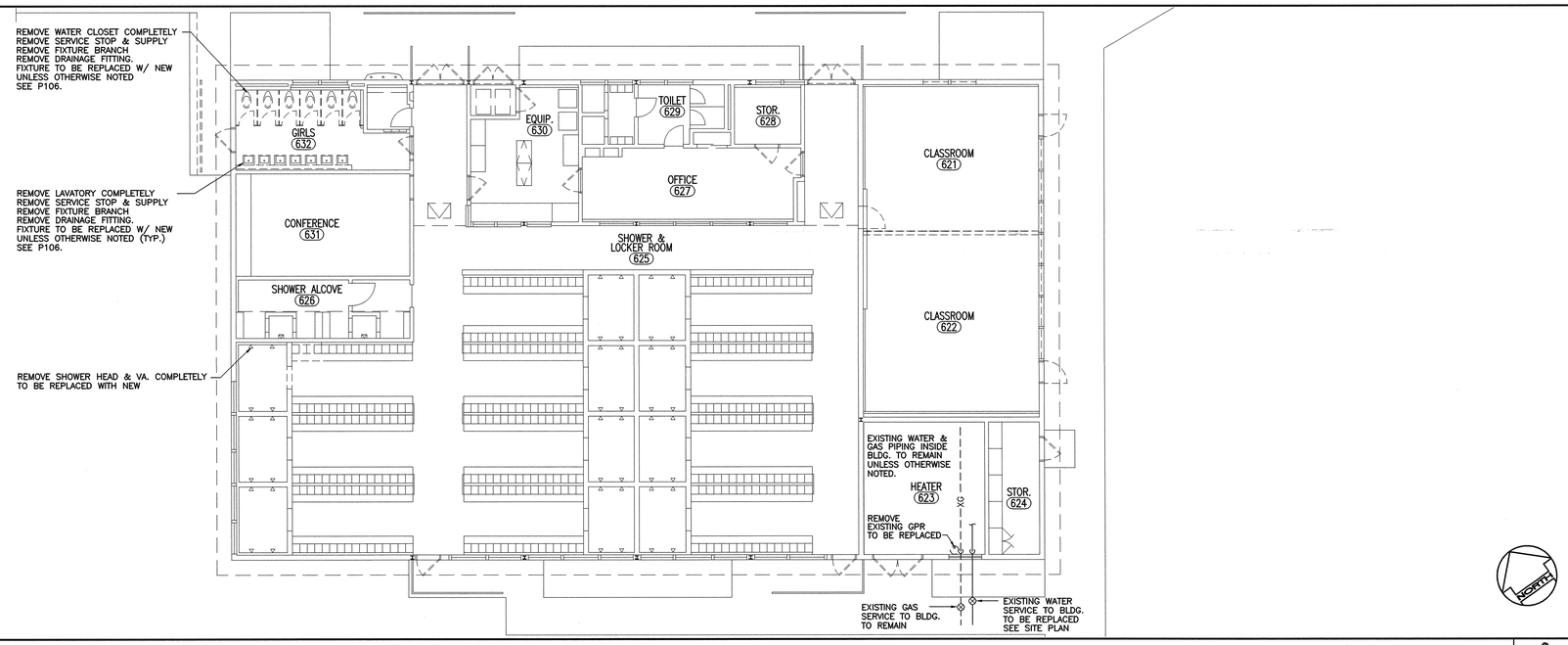

BUILDING O DEMOLITION PLAN

GIRLS LOCKER BUILDING

2 — 1/8"=1'-0"

DEMOLITION NOTES

1. REMOVE EXISTING PLUMBING FIXTURE REMOVE SUPPLY STOPS, FIXTURE BRANCH AND DRAINAGE FITTINGS COMPLETELY.
2. EXISTING PLUMBING FIXTURE TO REMAIN

KEY PLAN

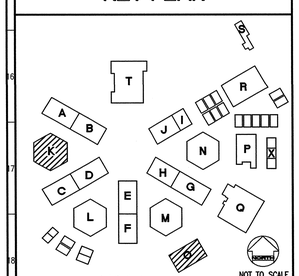

NOT TO SCALE

REVISED MAY 12 2004

IDENTIFICATION STAMP
DIV. OF THE STATE ARCHITECT
OFFICE OF REGULATION SERVICES
FILE NO. 19-H51
APPL. NO. 03-106434
AC. ____ FLS. NL SS ____
DATE ____

Dougherty ■ Dougherty
Architecture • Planning • Interior Design
7744 Orangethorpe Avenue
Buena Park, CA 90620
(714) 427-0277

Copyright © 2002 Dougherty + Dougherty

FTA
Fire Technology
631 S. Hope Blvd.
Anaheim, CA 92805
Phone (714) 772-9993
Fax (714) 772-9994
File Name: 23084
Job Number: 23084

Architect Seal

Consultant Seal

LA MIRADA HIGH SCHOOL MODERNIZATION

NORWALK - LA MIRADA UNIFIED SCHOOL DISTRICT
13520 ADELFA DRIVE LA MIRADA, CA 90638

CLASSROOMS K & O PLUMBING DEMOLITION PLANS

Date:	04-01-04
Job:	20237.50
Scale:	1/8" = 1'
Drawn:	
Revisions:	

PD106

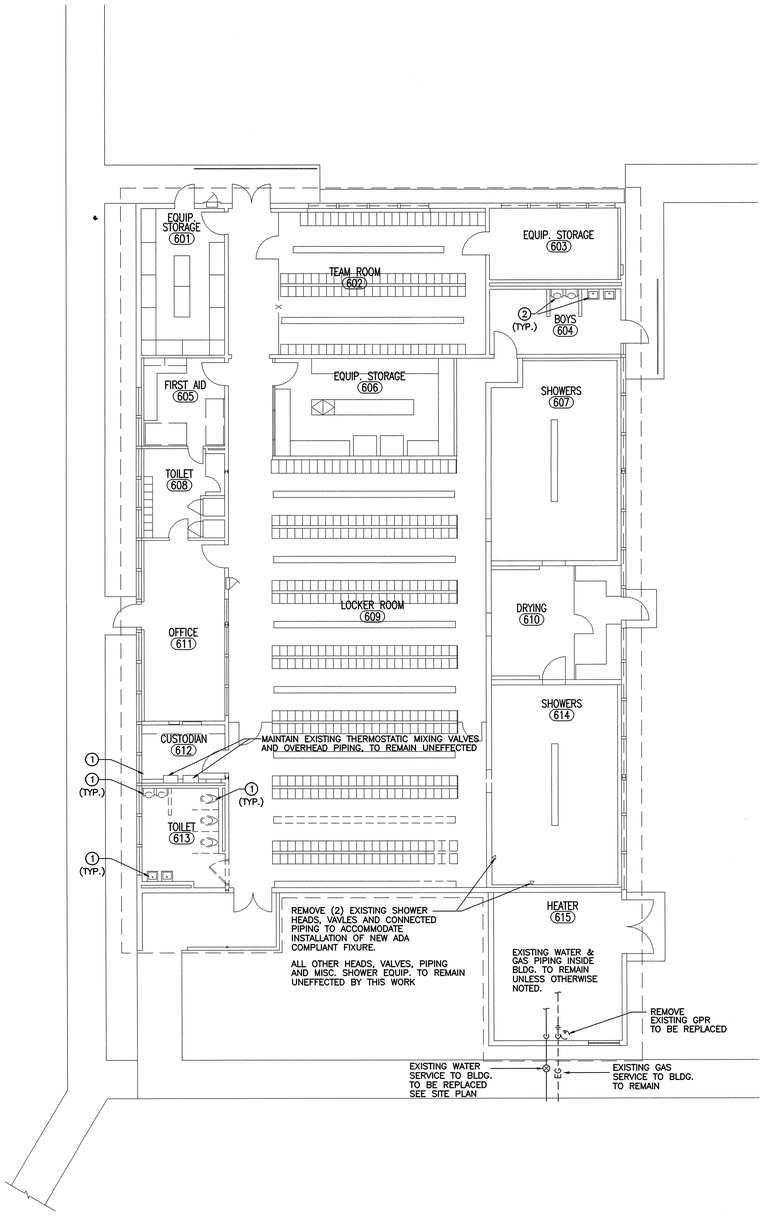

BUILDING P DEMOLITION PLAN

BOYS LOCKER ROOM BUILDING

2

1/8"=1'-0"

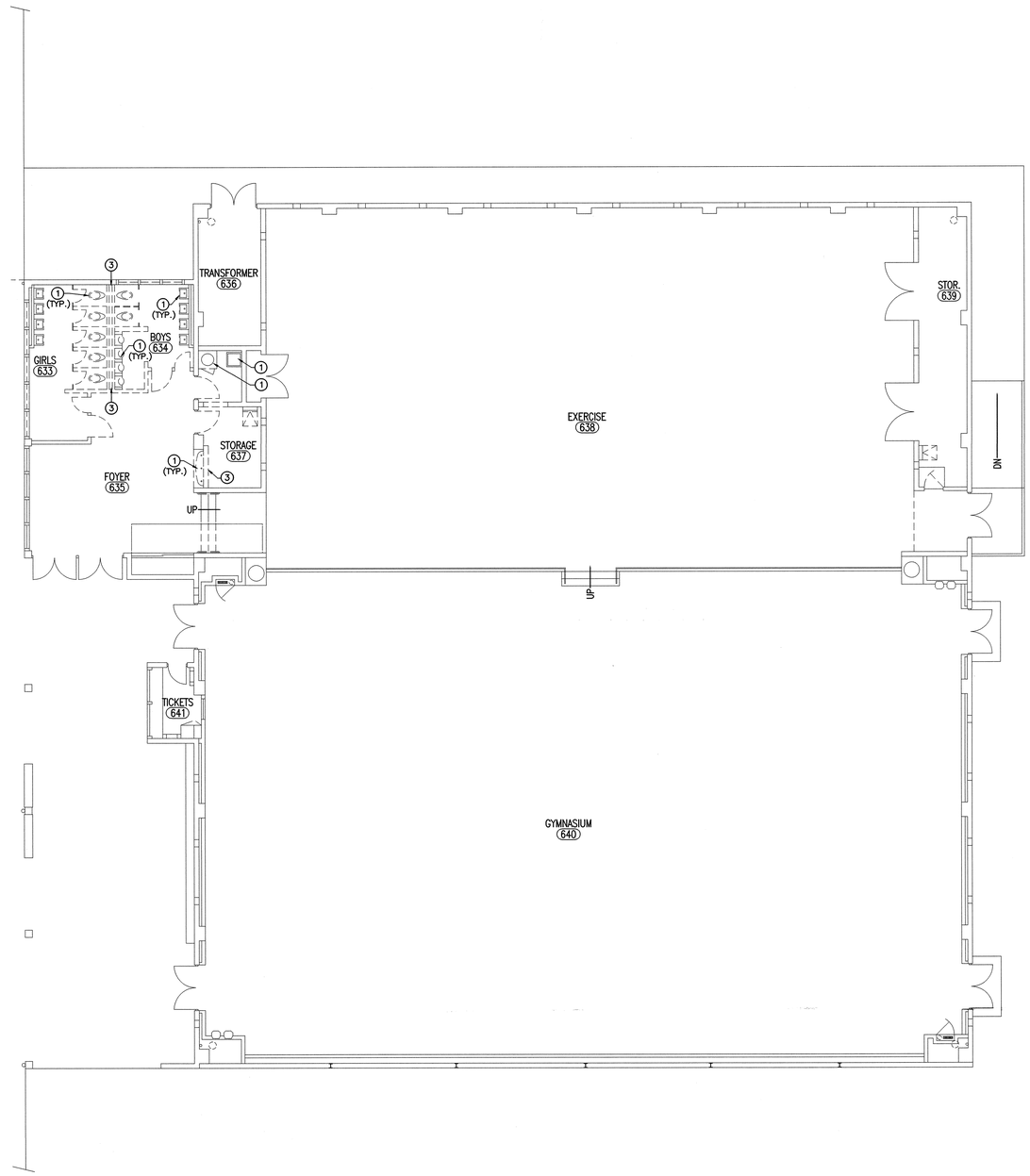

BUILDING Q DEMOLITION PLAN

GYMNASIUM BUILDING

1

1/8"=1'-0"

DEMOLITION NOTES

1. REMOVE EXISTING PLUMBING FIXTURE REMOVE SUPPLY STOPS, FIXTURE BRANCH AND DRAINAGE FITTINGS COMPLETELY.
2. EXISTING PLUMBING FIXTURE TO REMAIN
3. REMOVE ALL PLUMBING PIPING FROM WITHIN WALL BEING DEMOLISHED. CAP OFF ABOVE CEILING & BELOW FLOOR RESPECTIVELY.

KEY PLAN

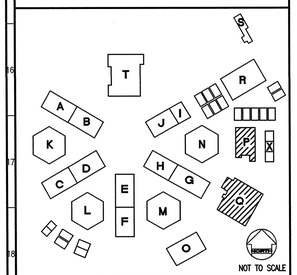

NOT TO SCALE

REVISED

MAY 1 2 2004

IDENTIFICATION STAMP
DIV. OF THE STATE ARCHITECT
OFFICE OF REGULATION SERVICES

FILE NO. 19-H51
APPL. NO. 03-106434

AC.____ FLS. 11 SS.____

DATE____

Dougherty + Dougherty
Architecture • Planning • Interior Design
2194-D Airport Loop Drive
Costa Mesa, CA 92626
(714) 427-0277

Copyright © 2002 Dougherty + Dougherty

FTA
Fire Technology
831 S. Harbor Blvd.
Anaheim, CA 92805
Phone (714) 772-9893
Fax (714) 772-9899
Job Number: 23054

Architect Seal

Consultant Seal

LA MIRADA HIGH SCHOOL MODERNIZATION

NORWALK - LA MIRADA UNIFIED SCHOOL DISTRICT
13520 ADELFA DRIVE LA MIRADA, CA 90638

CLASSROOMS P & Q
PLUMBING
DEMOLITION PLANS

Date:	04-01-04
Job:	20237.50
Scale:	1/8" = 1'
Drawn:	
Revisions:	

PD107

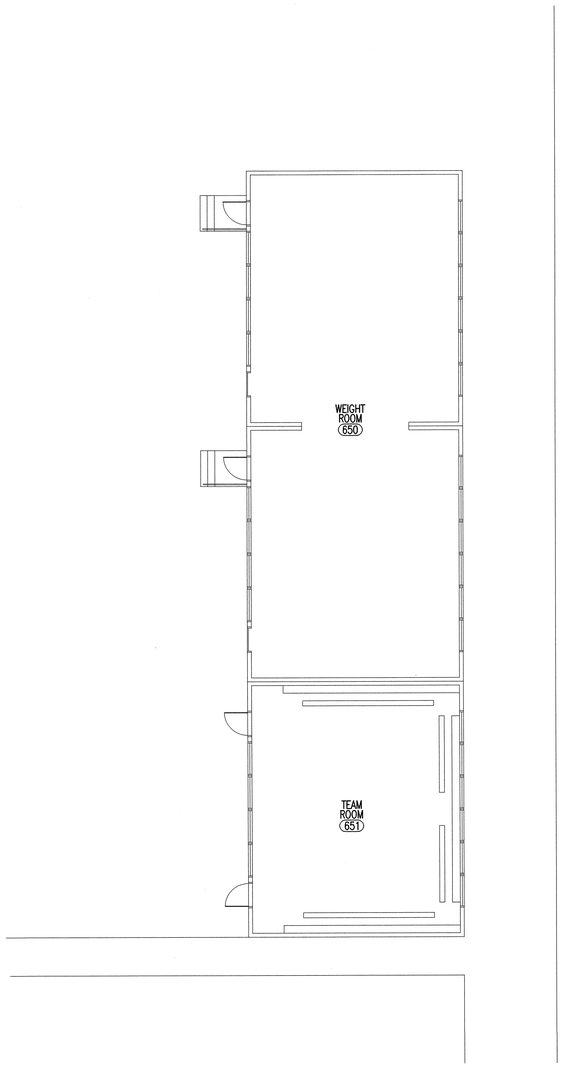

BUILDING X DEMOLITION PLAN

WEIGHT ROOM BUILDING

A19

1/8"=1'-0"

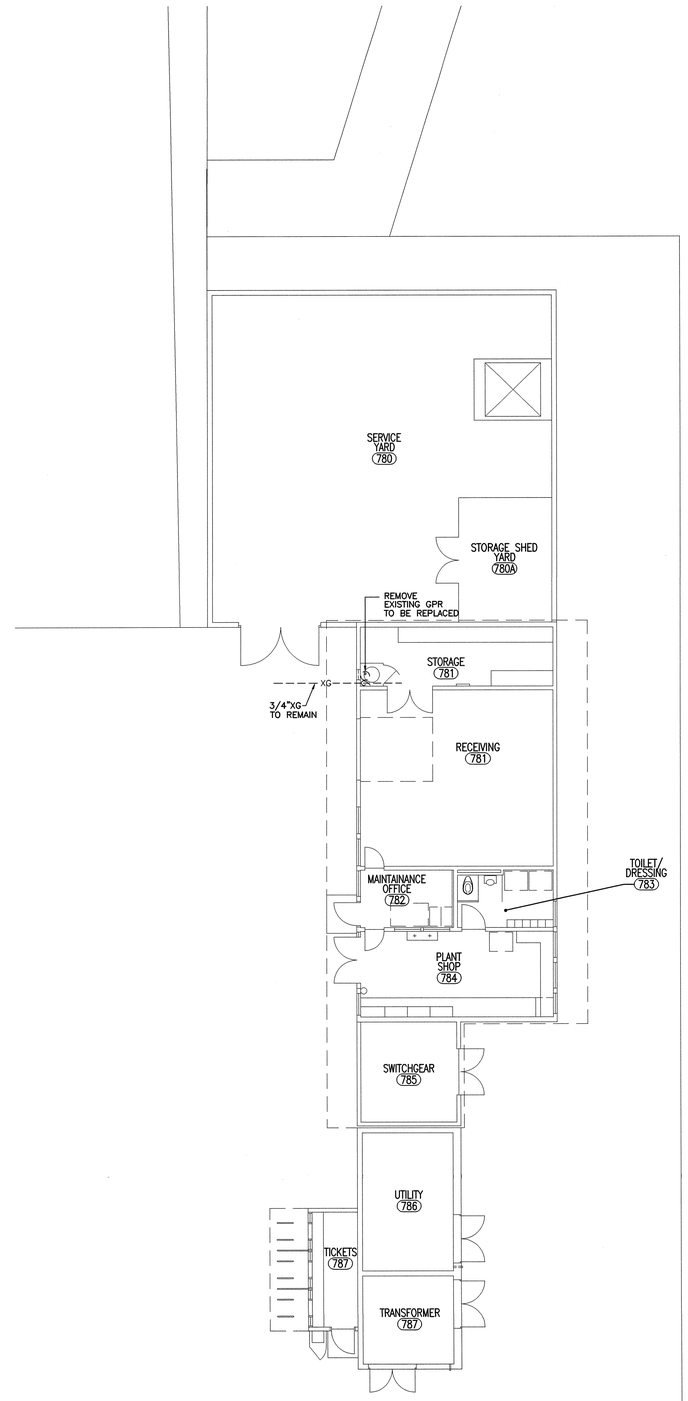

BUILDING S DEMOLITION PLAN

UTILITIES BUILDING

A19

1/8"=1'-0"

KEY PLAN

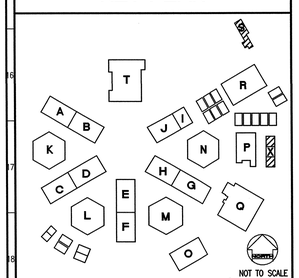

NOT TO SCALE

REVISED

MAY 1 2 2004

IDENTIFICATION STAMP
DIV. OF THE STATE ARCHITECT
OFFICE OF REGULATION SERVICES

FILE NO. 19-H51

APPL. NO. 03-106434

AC. ____ FLS. ____ SS. ____

DATE ____

Dougherty ∷ Dougherty
Architecture · Planning · Interior Design
3194 - D Airport Loop Drive
Costa Mesa, CA 92626
(714) 427- 0277

Copyright © 2002 Dougherty + Dougherty

FTA
Fire Technologies, Inc.
838 S. Harbor Blvd.
Anaheim, CA 92805
Phone: (714) 772-9893
Fax: (714) 772-9899
File Name: 20237
Job Number: 20364

Architect Seal

Consultant Seal

LA MIRADA HIGH SCHOOL MODERNIZATION

NORWALK - LA MIRADA UNIFIED SCHOOL DISTRICT
13520 ADELFA DRIVE LA MIRADA, CA 90638

CLASSROOMS S & X PLUMBING DEMOLITION PLANS

Date:	04-01-04
Job:	20237.50
Scale:	1/8" = 1'
Drawn:	
Revisions:	

PD108

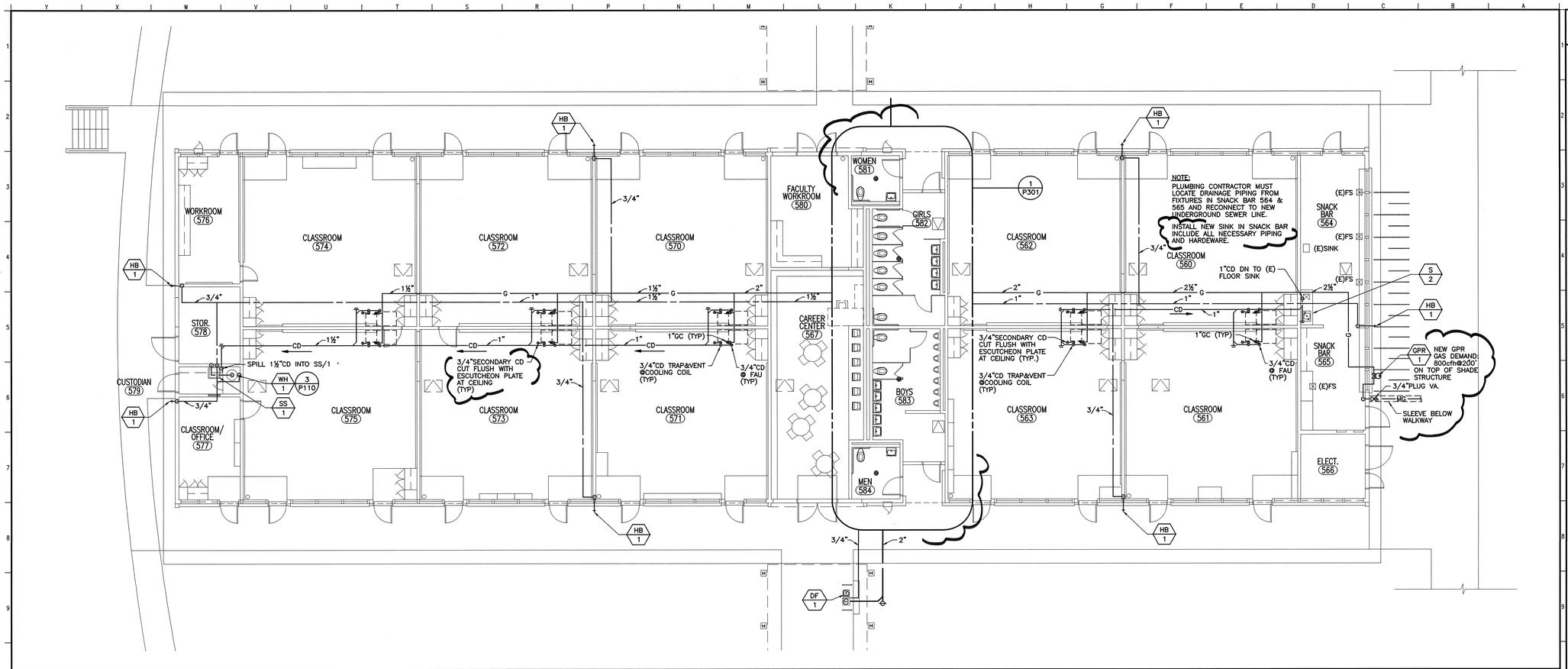

BUILDINGS A & B FLOOR PLANS

1
1/8"=1'-0"

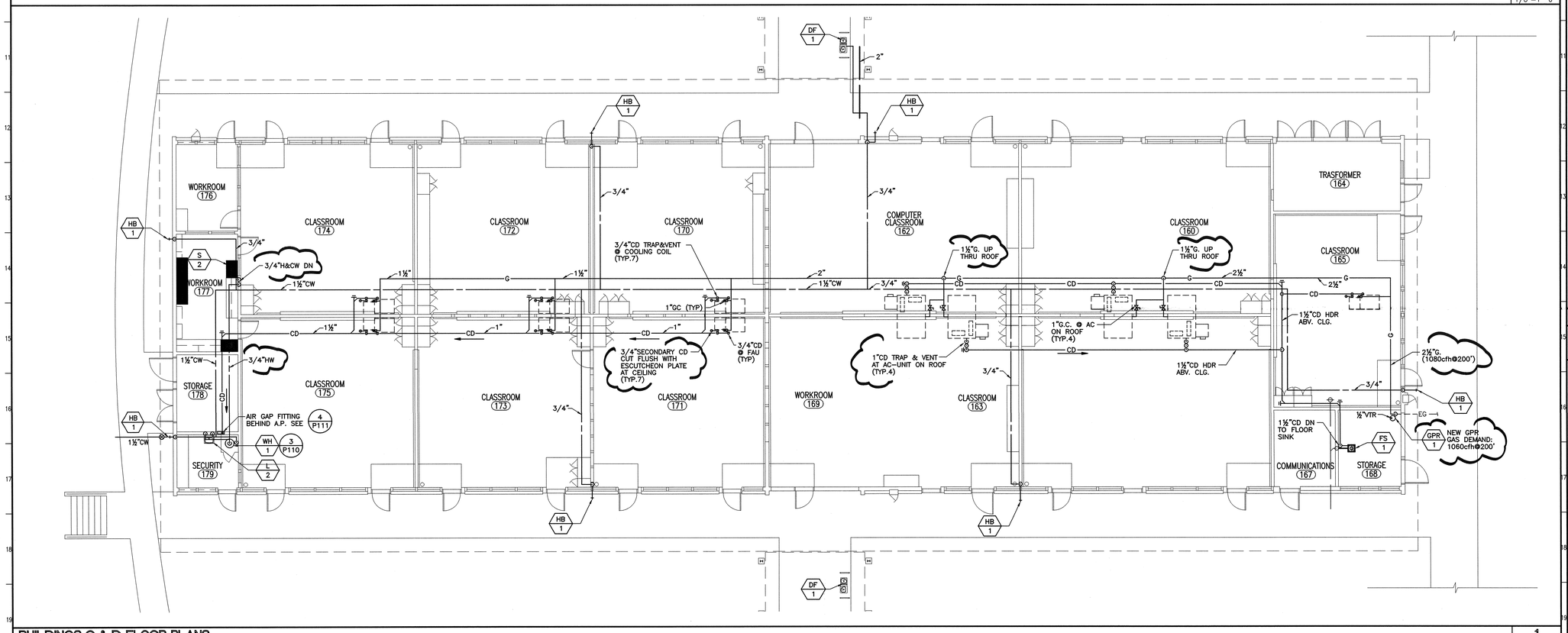

BUILDINGS C & D FLOOR PLANS

1
1/8"=1'-0"

KEY PLAN

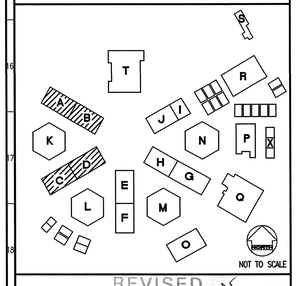

REVISED MAY 1 2 2004

IDENTIFICATION STAMP
DIV. OF THE STATE ARCHITECT
OFFICE OF REGULATION SERVICES
FILE NO. 19-H51
APPL. NO. 03-106434
AC. FLS. SS.
DATE

Dougherty ∴ Dougherty
Architecture · Planning · Interior Design
3100 Bristol Street, Suite 3
Costa Mesa, CA 92626
(714) 427-0277

Copyright © 2002 Dougherty + Dougherty

FTA
Fell Architects
838 S. Harbor Blvd.
Anaheim, CA 92805
Phone: (714) 772-9393
Fax: (714) 772-9399
Job Number: 22084

Architect Seal

Consultant Seal

LA MIRADA HIGH SCHOOL
MODERNIZATION
NORWALK - LA MIRADA UNIFIED SCHOOL DISTRICT
13520 ADELFA DRIVE LA MIRADA, CA 90638

CLSRMS A, B, C, & D
PLUMBING
FLOOR PLANS

Date:	04-01-04
Job:	20237.50
Scale:	1/8" = 1'
Drawn:	
Revisions:	

P101

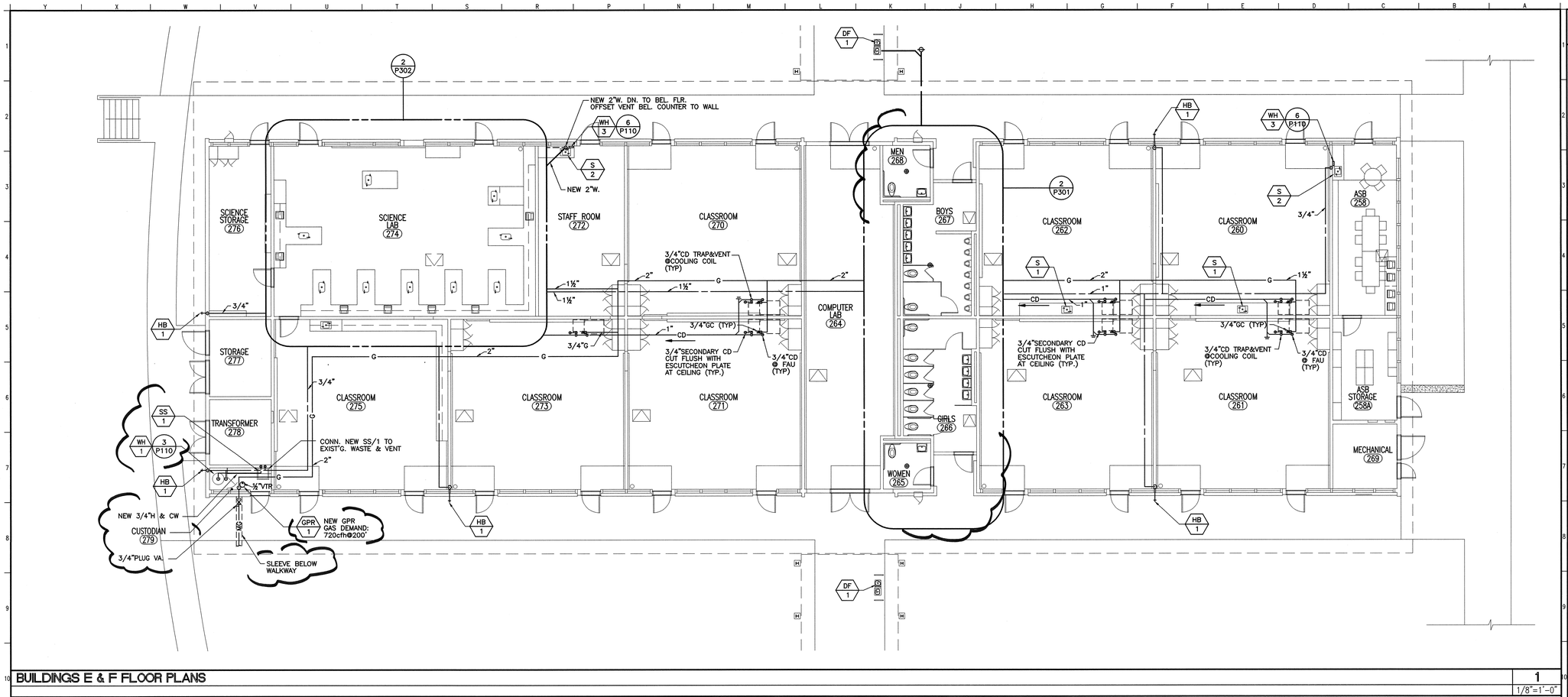

BUILDINGS E & F FLOOR PLANS

1
1/8"=1'-0"

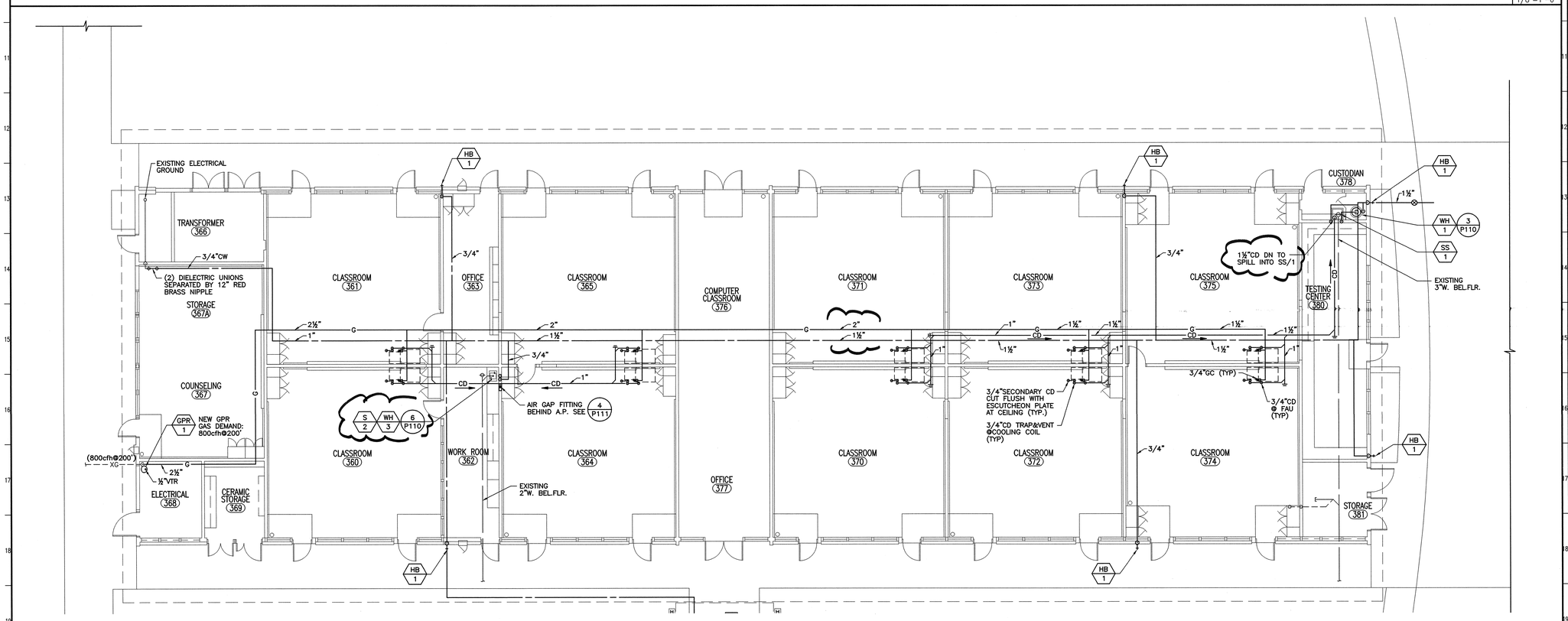

BUILDINGS G & H FLOOR PLANS

1
1/8"=1'-0"

KEY PLAN

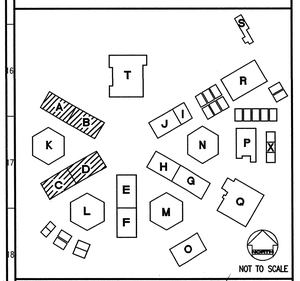

REVISED MAY 1 2 2004

IDENTIFICATION STAMP
DIV. OF THE STATE ARCHITECT
OFFICE OF REGULATION SERVICES
FILE NO. 19-H51
APPL. NO. 03-106434
AC. ____ FLS. IV / SS. ____
DATE ____

Dougherty + Dougherty
Architecture • Planning • Interior Design
3194-D Airport Loop Drive
Costa Mesa, CA 92626
(714) 425-0277

Copyright © 2002 Dougherty + Dougherty

FTA
831 S. Harbor Blvd.
Anaheim, CA 92805
Phone: (714) 772-6769
Fax: (714) 772-6769
Job Number: 22084

Architect Seal

Consultant Seal

LA MIRADA HIGH SCHOOL
MODERNIZATION
NORWALK - LA MIRADA UNIFIED SCHOOL DISTRICT
13520 ADELFA DRIVE LA MIRADA, CA 90638

CLSRMS E, F, G, & H
PLUMBING
FLOOR PLANS

Date:	04-01-04
Job:	20237.50
Scale:	1/8" = 1'
Drawn:	
Revisions:	

P102

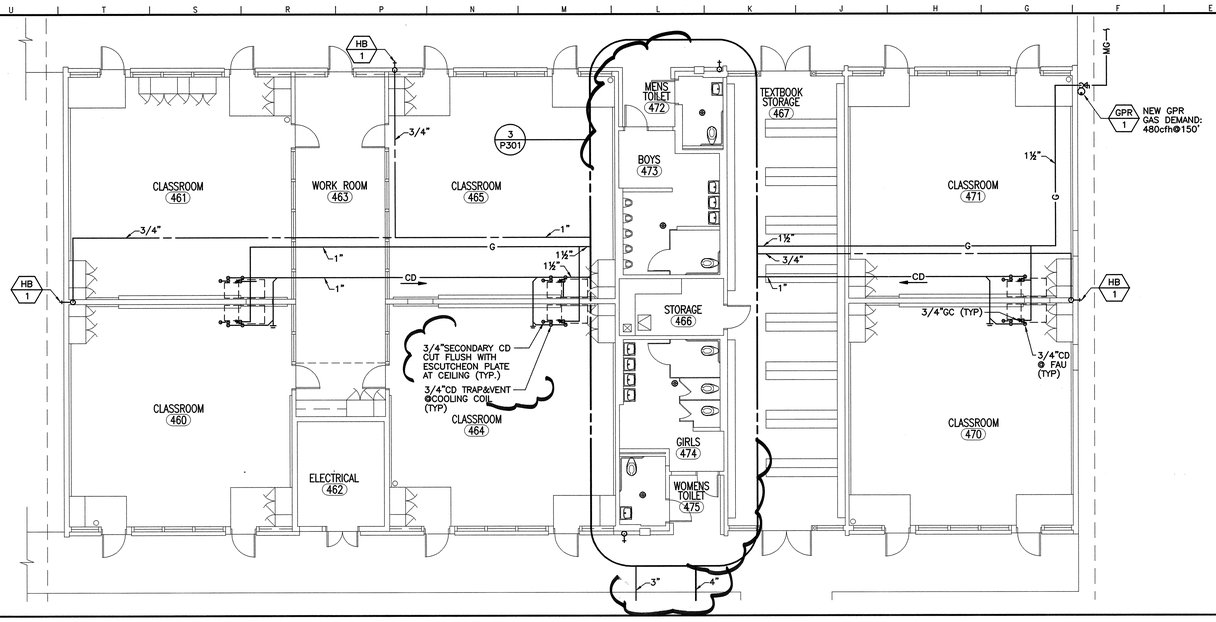

BUILDINGS I, & J FLOOR PLANS

1 — 1/8"=1'-0"

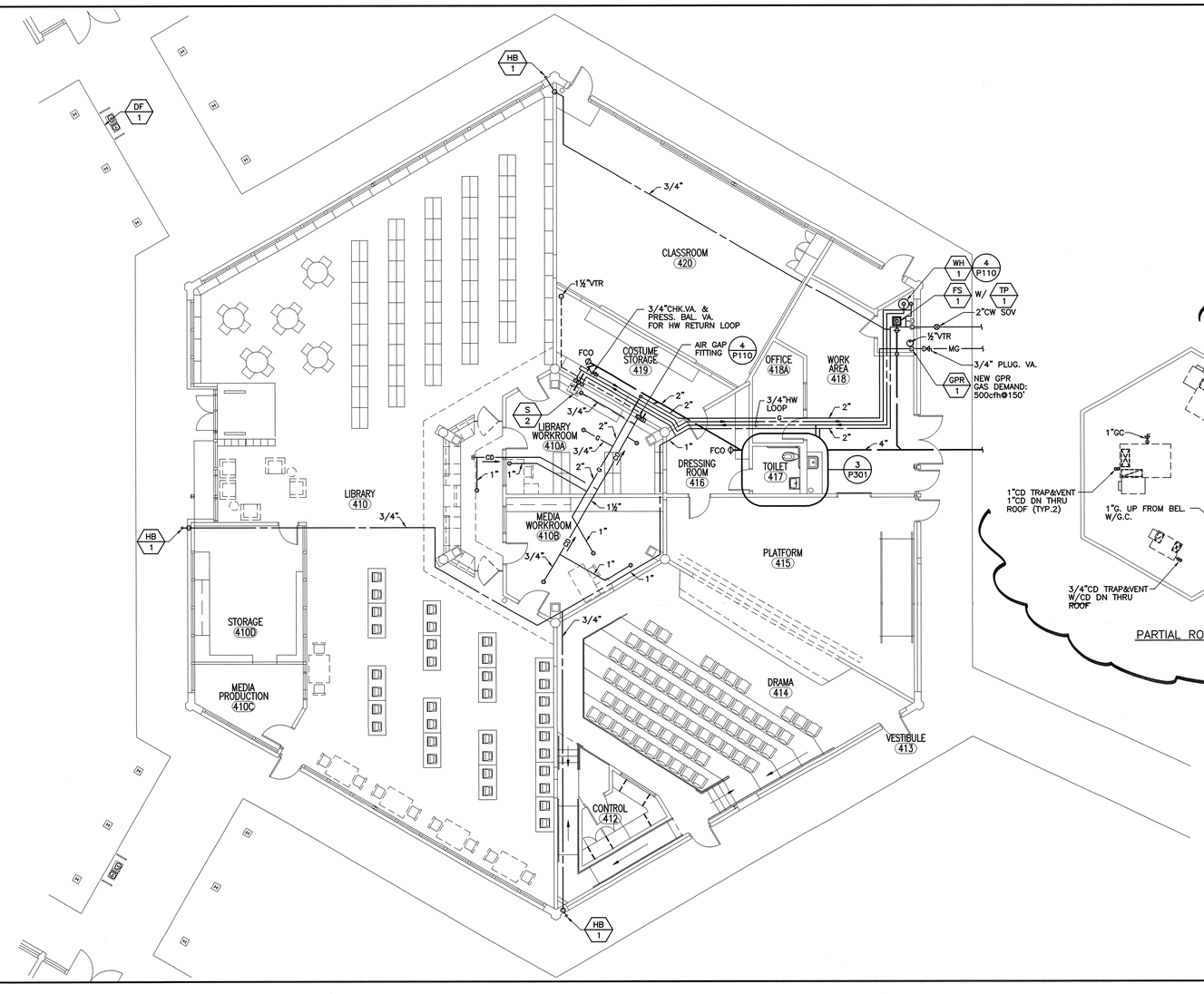

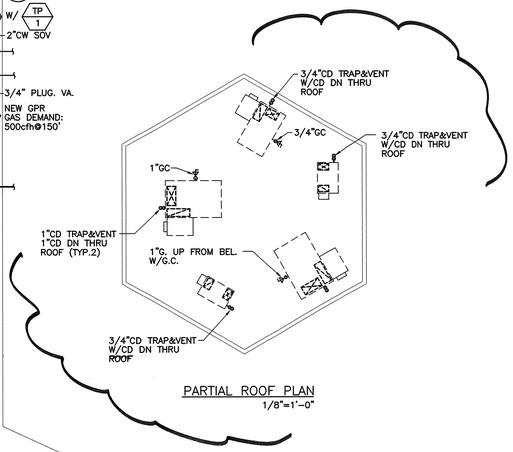

PARTIAL ROOF PLAN
1/8"=1'-0"

BUILDING N FLOOR PLAN

1 — 1/8"=1'-0"

KEY PLAN

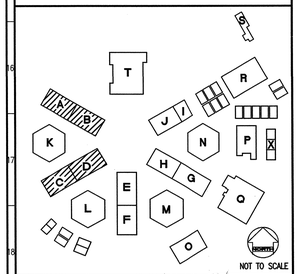

REVISED MAY 12 2004

IDENTIFICATION STAMP
DIV. OF THE STATE ARCHITECT
OFFICE OF REGULATION SERVICES
FILE NO. 19-H51
APPL. NO. 03-106434
AC. ____ FLS. NLT SS. ____
DATE ____

Dougherty ■ Dougherty
Architecture • Planning • Interior Design
3194-D Airport Loop Drive
Costa Mesa, CA 92626
(714) 427-0277

Copyright © 2002 Dougherty + Dougherty

FTA
Fritz Architects
831 S. Harbor Blvd.
Anaheim, CA 92805
Phone (714) 772-8989
Fax (714) 772-7539
Job Number: 23084

Architect Seal

Consultant Seal

LA MIRADA HIGH SCHOOL MODERNIZATION

NORWALK - LA MIRADA UNIFIED SCHOOL DISTRICT
13520 ADELFA DRIVE LA MIRADA, CA 90638

CLSRMS I, J, & N
PLUMBING
FLOOR PLANS

Date:	04-01-04
Job:	20237.50
Scale:	1/8" = 1'
Drawn:	
Revisions:	

P103

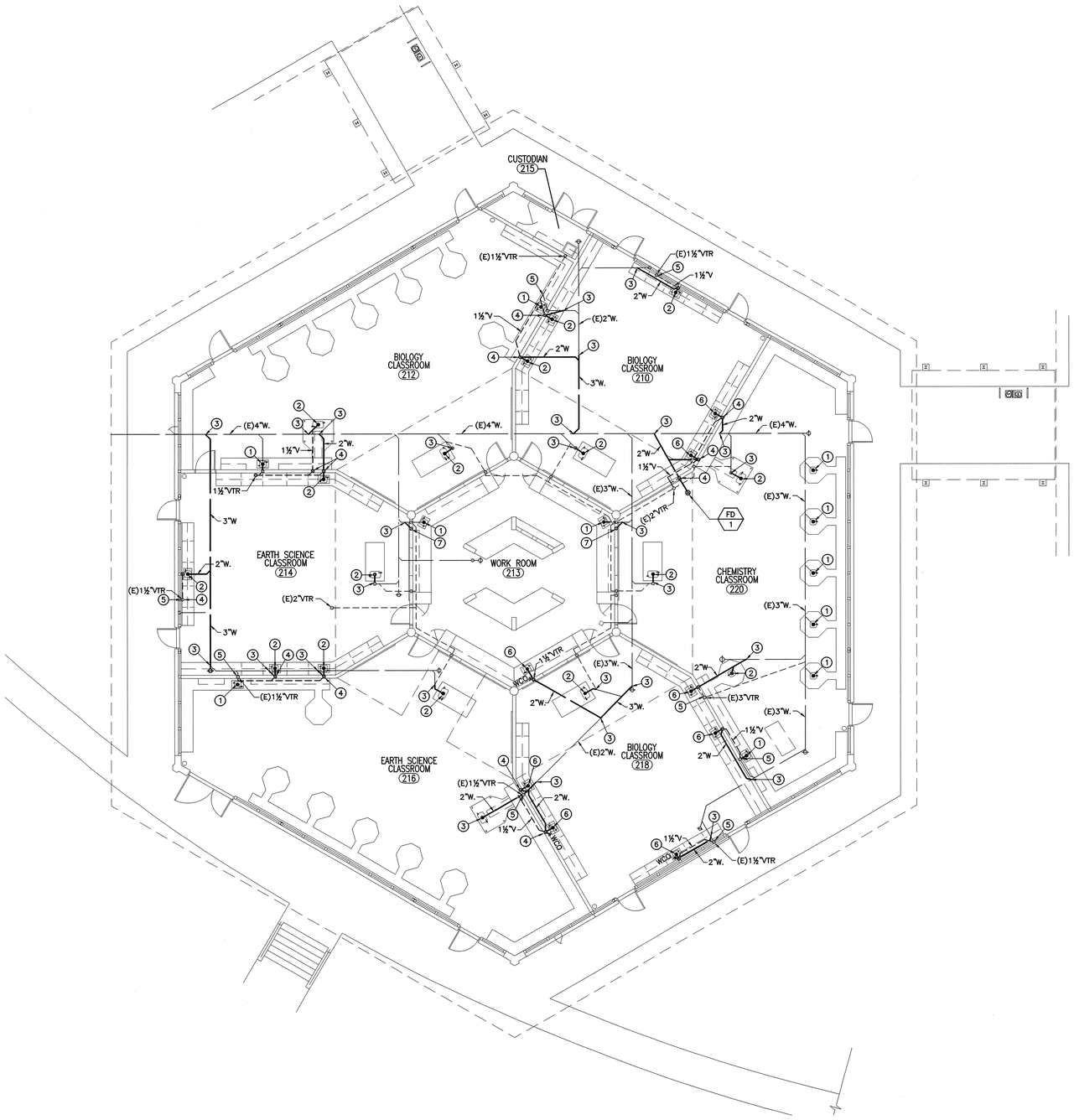

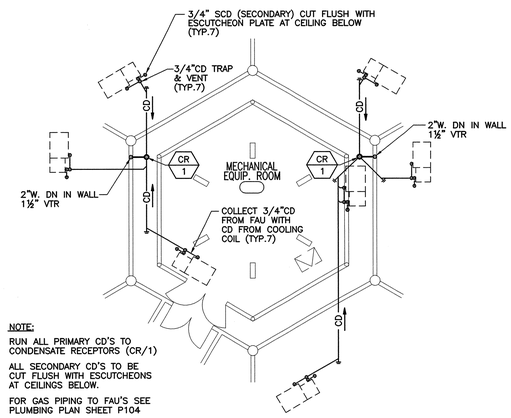

NOTE:

RUN ALL PRIMARY CD'S TO CONDENSATE RECEPTORS (CR/1)

ALL SECONDARY CD'S TO BE CUT FLUSH WITH ESCUTCHEONS AT CEILINGS BELOW.

FOR GAS PIPING TO FAU'S SEE PLUMBING PLAN SHEET P104

CONSTRUCTION NOTES:
BLDG. L WASTE PIPING

1. INSTALL NEW TRAP, FIXTURE DRAIN AND VERTICAL WASTE PIPE BELOW COUNTER. CONNECT TO EXISITNG HORIZONTAL BRANCH BELOW FLOOR
2. INSTALL NEW TRAP, FIXTURE DRAIN AND VERTICAL WASTE PIPE BELOW COUNTER. INSTALL NEW HORIZONTAL BRANCH DRAIN BELOW FLOOR
3. CONNECT NEW HORIZONTAL BRANCH TO EXISTING WASTE PIPE BELOW FLOOR
4. INSTALL NEW 1½"V UP TO ABV. CLG.
5. CONNECT NEW 1½"V TO (E) VTR
6. INSTALL NEW TRAP, FIXTURE DRAIN, VERTICAL WASTE PIPE IN WALL, HORIZONTAL BRANCH BELOW FLOOR, 1½" VENT RISER IN WALL TO ABOVE CEILING.
7. 2"W. DN IN WALL FROM CR/1 AT MECHANICAL ROOM ABOVE.

KEY PLAN

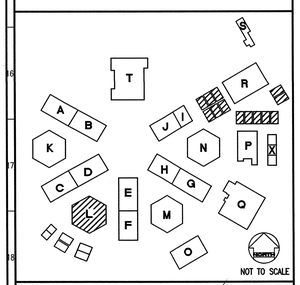

REVISED
MAY 12 2004

IDENTIFICATION STAMP
DIV. OF THE STATE ARCHITECT
OFFICE OF REGULATION SERVICES
FILE NO. 19-H51
APPL. NO. 03-106434
AC. ____ FLS. 11 SS ____
DATE ____

BUILDING L FLOOR PLAN

1
1/8"=1'-0"

Dougherty + Dougherty
Architecture • Planning • Interior Design
3194-D Airport Loop Drive
Costa Mesa, CA 92626
(714) 427-0277

Copyright © 2002 Dougherty + Dougherty

FTA
Fr. Anderson, Inc.
Consulting Engineers
831 S. Harbor Blvd.
Anaheim, CA 92805
Phone (714) 772-9383
Fax (714) 772-9784
Job Number: 22084

Consultant Seal

Architect Seal

LA MIRADA HIGH SCHOOL
MODERNIZATION
NORWALK - LA MIRADA UNIFIED SCHOOL DISTRICT
13520 ADELFA DRIVE LA MIRADA, CA 90638

CLSRMS L
WASTE PIPING
FLOOR PLAN

Date:	04-01-04
Job:	20237.50
Scale:	1/8" = 1'
Drawn:	
Revisions:	

P104.1

CONSTRUCTION NOTES: BUILDING L

SEE P104.1 FOR WASTE & VENT AND CONDENSATE DRAINS

1. INSTALL NEW PLUMBING FIXTURE COMPLETE. INCLUDING ALL NECESSARY PIPING & HARDWARE. INSTALL NEW ROUGH-IN'S.
2. 1" GC. (80cfh)
3. 3/4" G. HDR.
4. ½" G. BELOW FLOOR IN PIPE SLEEVE PER CPC SECT. 1211.4 & 1211.7
5. ½"CW & ½"G DN IN WALL TO BEL. FLR. SLEEVE. GAS PIPE BEL FLR. RUN ½"CW & ½"G TO INSTRUCTORS TABLE
6. ½"H & CW DN. TO SINK S/2

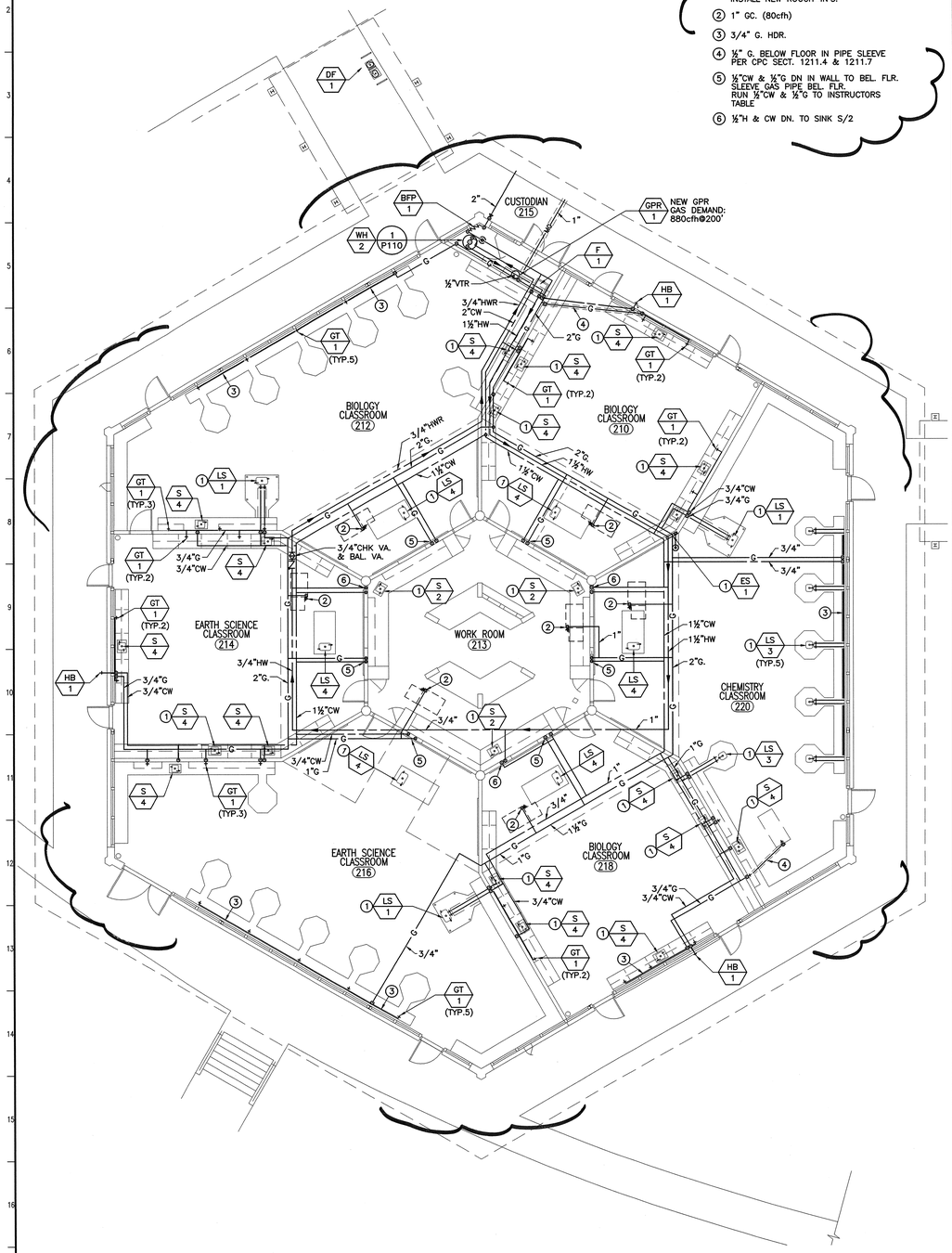

BUILDING L FLOOR PLAN — 2 — 1/8"=1'-0"

CONSTRUCTION NOTES: BUILDING M

1. INSTALL NEW PLUMBING FIXTURE COMPLETE. INCLUDING ALL NECESSARY PIPING & HARDWARE. INSTALL NEW ROUGH-IN'S.
2. 1" GC. (80cfh)
3. 3/4" CD TRAP & VENT @ COOLING COIL COLLECT WITH 3/4" CD FROM FAU
4. 3/4" SCD (SECONDARY) CUT FLUSH WITH ESCUTCHEON PLATE AT FACE OF EXTERIOR WALL.
5. SPILL CD'S INTO EXISTING DRAIN IN MECH. RM. ABOVE.

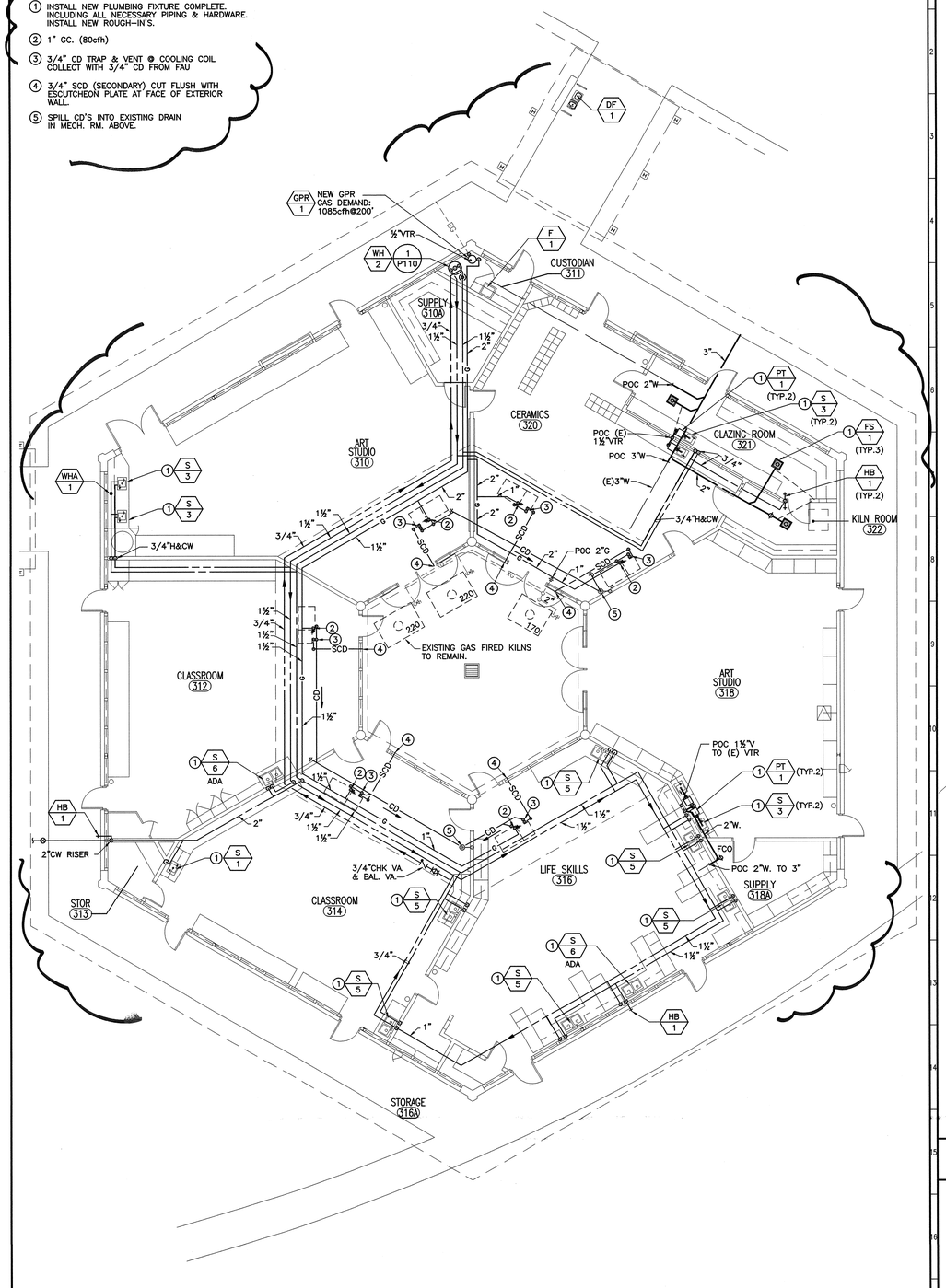

BUILDING M FLOOR PLAN — 1 — 1/8"=1'-0"

KEY PLAN

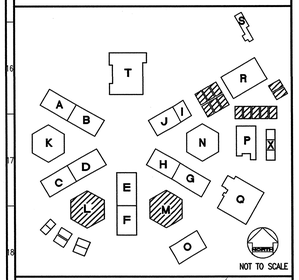

REVISED MAY 1 2 2004

IDENTIFICATION STAMP
DIV. OF THE STATE ARCHITECT
OFFICE OF REGULATION SERVICES
FILE NO. 19-H51
APPL. NO. 03-106434
AC. ___ FLS NC SS ___
DATE ___

Dougherty + Dougherty
Architecture · Planning · Interior Design
3194-D Airport Loop Drive
Costa Mesa, CA 92626
(714) 427-0277

Copyright © 2002 Dougherty + Dougherty

FTA
Fire Technology Associates
8381 S. Harbor Blvd.
Anaheim, California 92805
Phone: (714) 772-2983
Fax: (714) 772-7939
Job Number: 23054

Architect Seal

Consultant Seal

LA MIRADA HIGH SCHOOL MODERNIZATION

NORWALK - LA MIRADA UNIFIED SCHOOL DISTRICT
13520 ADELFA DRIVE LA MIRADA, CA 90638

CLSRMS L & M PLUMBING FLOOR PLANS

Date:	04-01-04
Job:	20237.50
Scale:	1/8" = 1'
Drawn:	
Revisions:	

P104

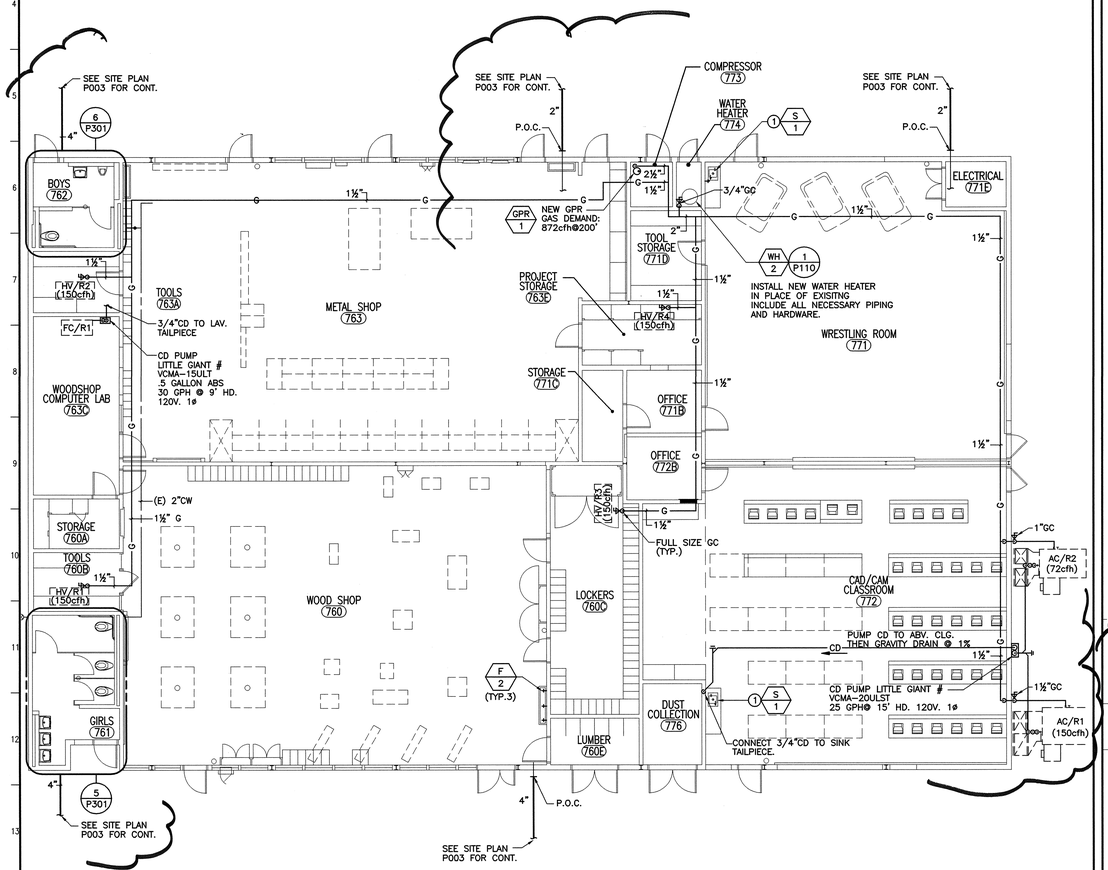

BUILDING R FLOOR PLAN

2

1/8"=1'-0"

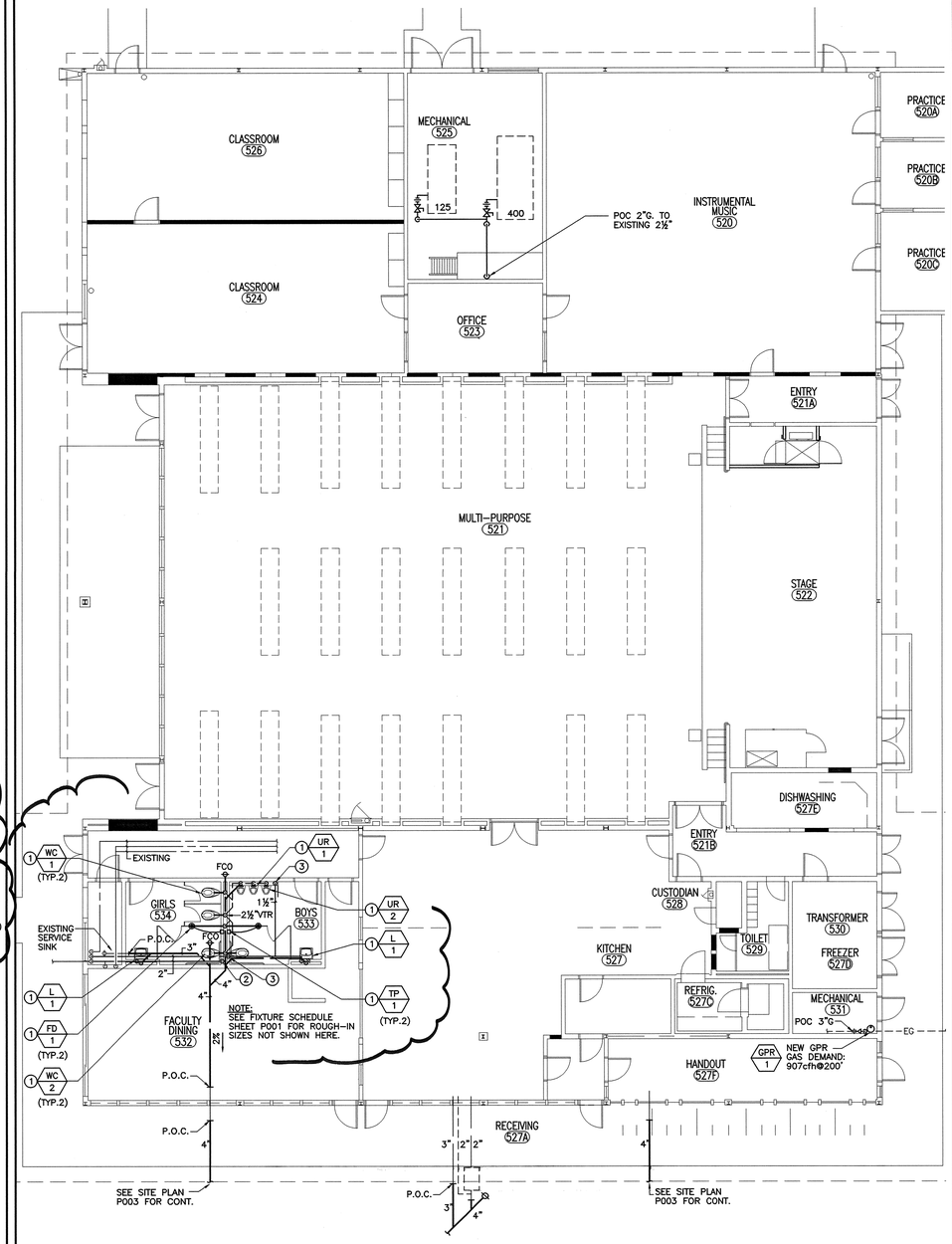

BUILDING T FLOOR PLAN

1

1/8"=1'-0"

CONSTRUCTION NOTES

1. INSTALL NEW FIXTURE COMPLETELY INCLUDING ALL NECESSARY PIPING AND HARDWARE.
2. 2"CW DN IN WALL
3. 1½"CW DN IN WALL

KEY PLAN

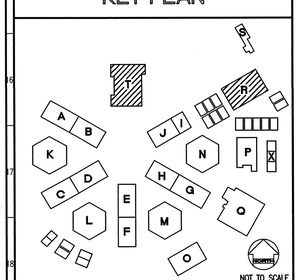

REVISED MAY 12 2004

IDENTIFICATION STAMP
DIV. OF THE STATE ARCHITECT
OFFICE OF REGULATION SERVICES
FILE NO. 19-H51
APPL. NO. 03-106434
AC ___ FLS. NC SS ___
DATE ___

Dougherty + Dougherty
Architecture • Planning • Interior Design
3194-D Airport Loop Drive
Costa Mesa, CA 92626
(714) 427-0277

Copyright © 2002 Dougherty + Dougherty

FTA
831 S. Harbor Blvd.
Anaheim, CA 92805
Phone: (714) 772-0780
Fax: (714) 772-0788
Job Number: 22004

Consultant Seal

Architect Seal

LA MIRADA HIGH SCHOOL MODERNIZATION

NORWALK - LA MIRADA UNIFIED SCHOOL DISTRICT
13520 ADELFA DRIVE LA MIRADA, CA 90638

CLASSROOMS R & T PLUMBING FLOOR PLANS

Date:	04-01-04
Job:	20237.50
Scale:	1/8" = 1'
Drawn:	
Revisions:	

P105

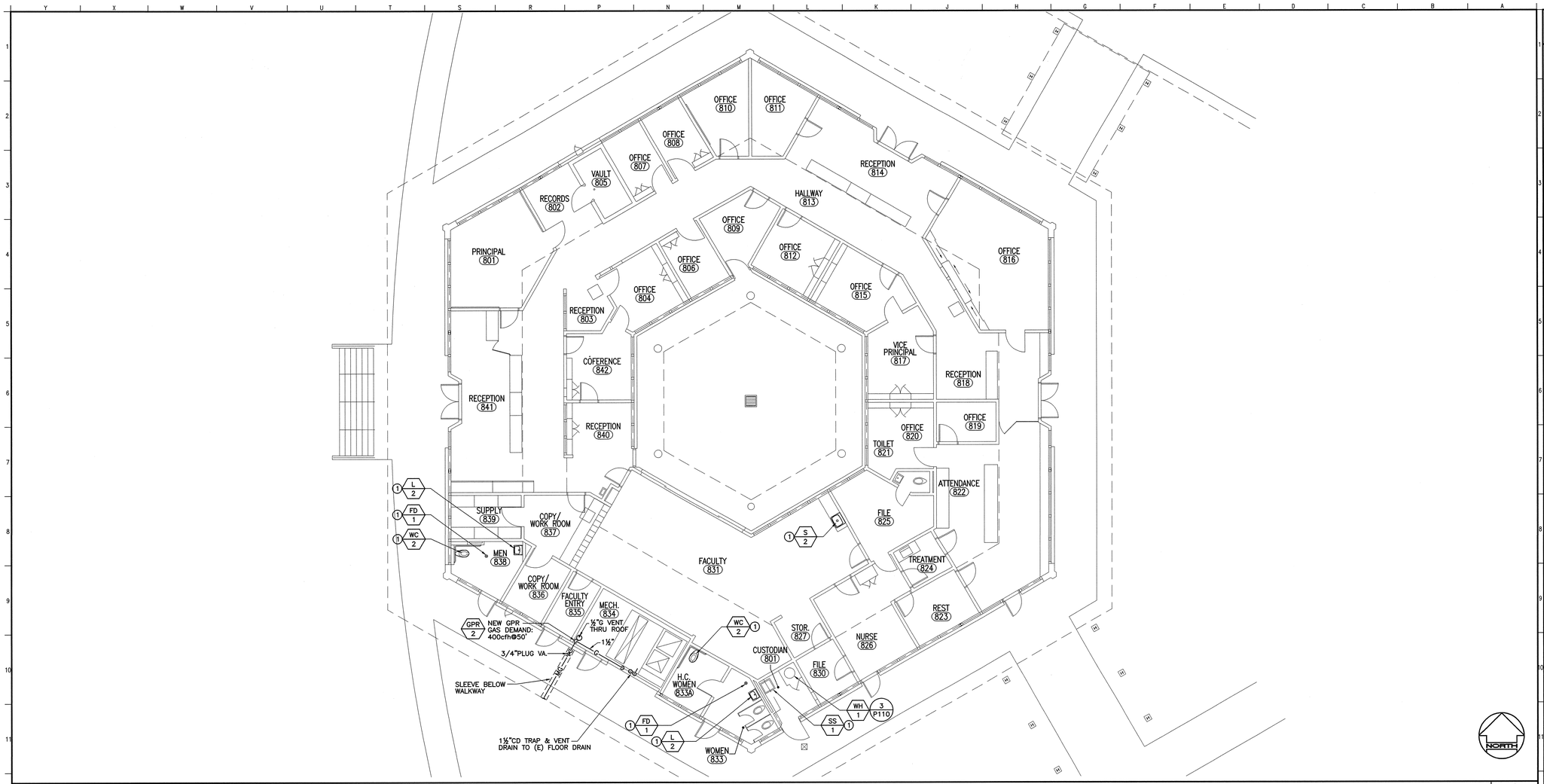

BUILDING K FLOOR PLAN

ADMINISTRATION BUILDING

1 — 1/8"=1'-0"

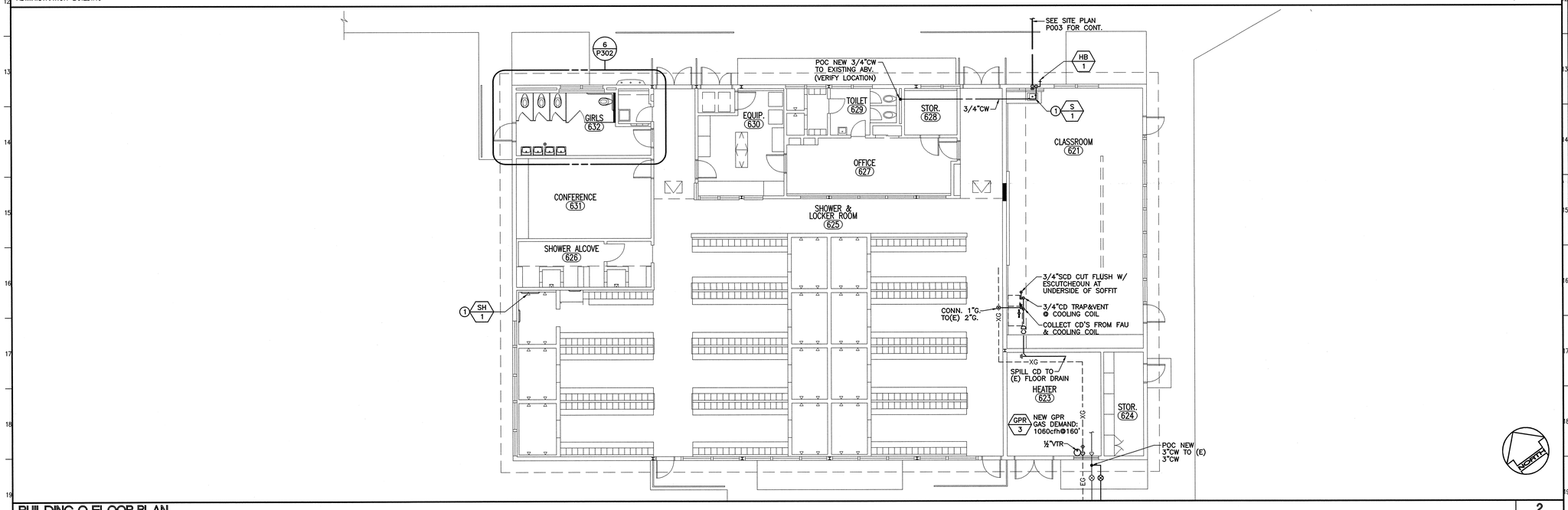

BUILDING O FLOOR PLAN

GIRLS LOCKER BUILDING

2 — 1/8"=1'-0"

CONSTRUCTION NOTES

1. INSTALL NEW FIXTURE COMPLETELY INCLUDING ALL NECESSARY PIPING AND HARDWARE.

KEY PLAN

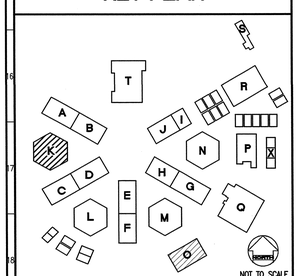

NOT TO SCALE

REVISED MAY 12 2004

IDENTIFICATION STAMP
DIV. OF THE STATE ARCHITECT
OFFICE OF REGULATION SERVICES
FILE NO. 19-H51
APPL. NO. 03-106434
AC.____ FLS. NCF SS.____
DATE____

Dougherty + Dougherty
Architecture • Planning • Interior Design
3194-D Airport Loop Drive
Costa Mesa, CA 92626
(714) 422-0277

Copyright © 2002 Dougherty + Dougherty

FTA
Facilities Technology Associates
831 S. Harbor Blvd.
Anaheim, CA 92805
Phone: (714) 772-9788
Fax: (714) 772-9789
Job Number: 02004

Architect Seal

Consultant Seal

LA MIRADA HIGH SCHOOL MODERNIZATION

NORWALK - LA MIRADA UNIFIED SCHOOL DISTRICT
13520 ADELFA DRIVE LA MIRADA, CA 90638

CLASSROOMS K & O PLUMBING FLOOR PLANS

Date:	04-01-04
Job:	20237.50
Scale:	1/8" = 1'
Drawn:	
Revisions:	

P106

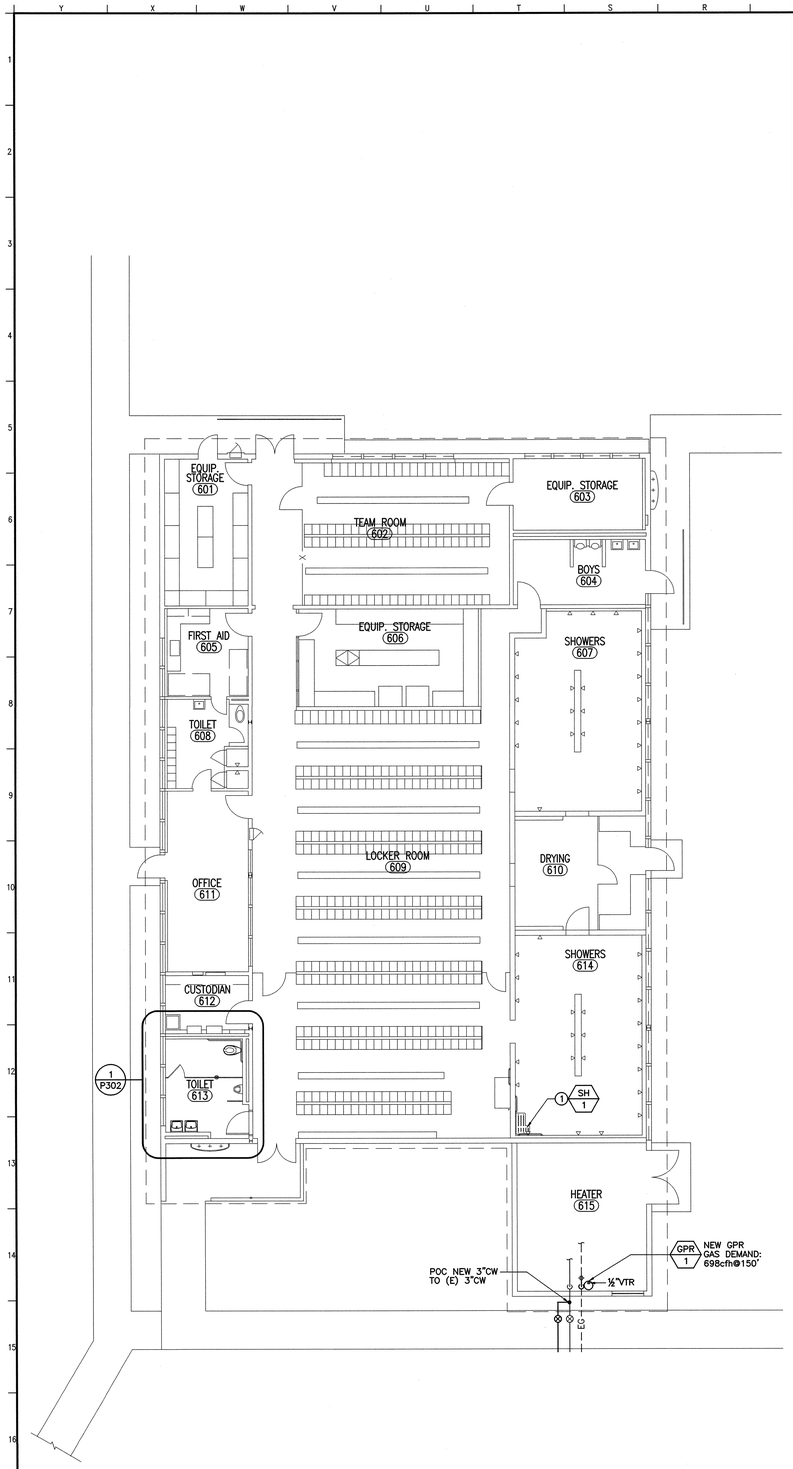

BUILDING P FLOOR PLAN

BOYS LOCKER ROOM BUILDING

2

1/8"=1'-0"

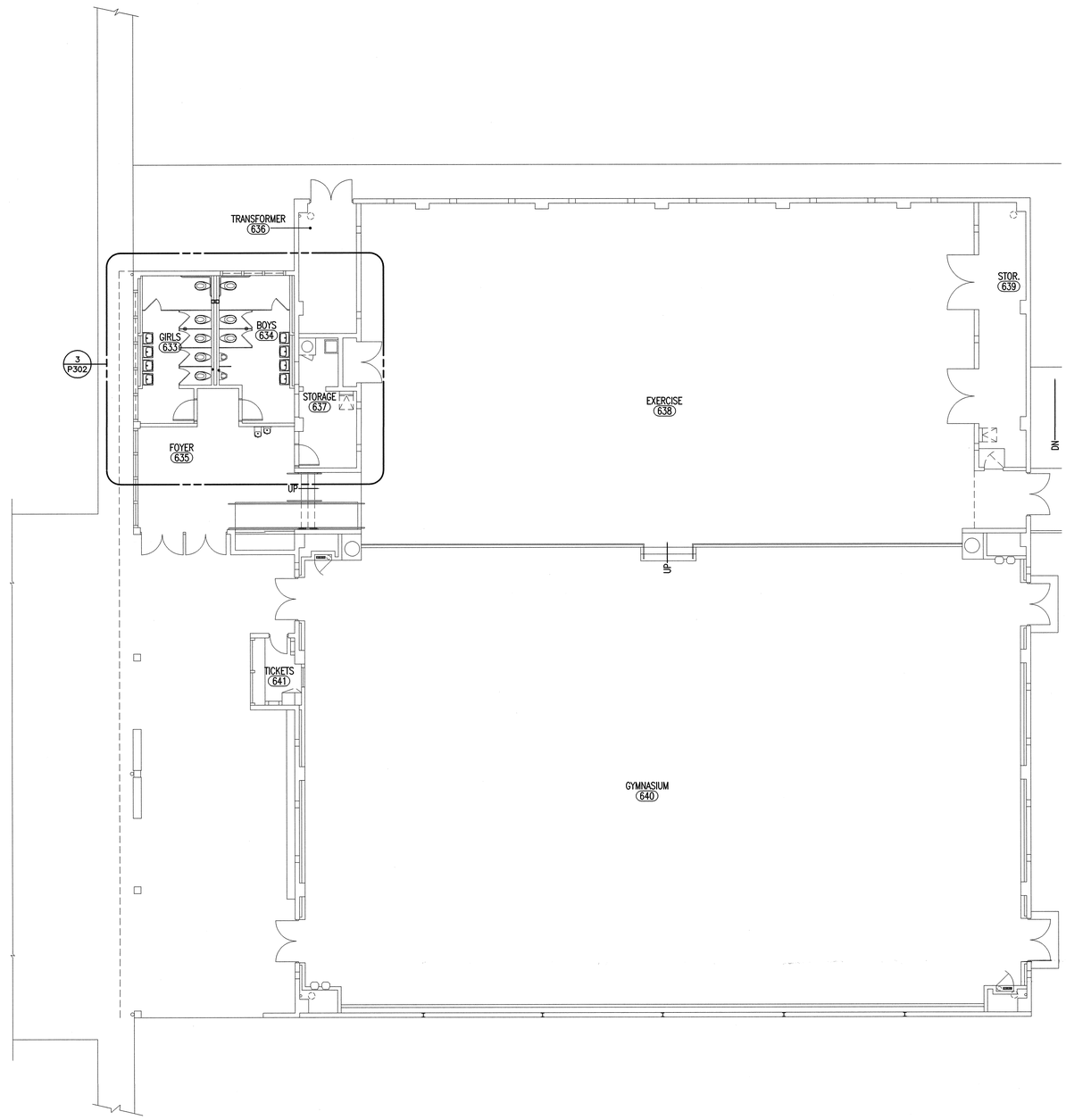

BUILDING Q FLOOR PLAN

GYMNASIUM BUILDING

1

1/8"=1'-0"

CONSTRUCTION NOTES

1. INSTALL NEW FIXTURE COMPLETELY INCLUDING ALL NECESSARY PIPING AND HARDWARE.

KEY PLAN

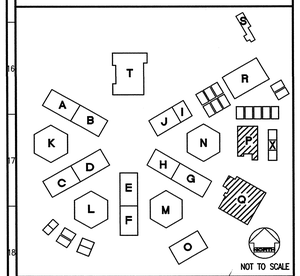

NOT TO SCALE

REVISED MAY 12 2004

IDENTIFICATION STAMP
DIV. OF THE STATE ARCHITECT
OFFICE OF REGULATION SERVICES
FILE NO. 19-H51
APPL. NO. 03-106434
AC. ____ FLS. N/A SS. ____
DATE ____

Dougherty + Dougherty
Architecture • Planning • Interior Design
3194-D Airport Loop Drive
Costa Mesa, CA 92626
(714) 427-0277

Copyright © 2002 Dougherty + Dougherty

FTA
831 S. Harbor Blvd.
Anaheim, CA 92805
Phone: (714) 772-8585
Fax: (714) 772-8788
Job Number: 22004

Architect Seal

Consultant Seal

LA MIRADA HIGH SCHOOL MODERNIZATION

NORWALK - LA MIRADA UNIFIED SCHOOL DISTRICT
13520 ADELFA DRIVE LA MIRADA, CA 90638

CLASSROOMS P & Q PLUMBING FLOOR PLANS

Date:	04-01-04
Job:	20237.50
Scale:	1/8" = 1'
Drawn:	
Revisions:	

P107

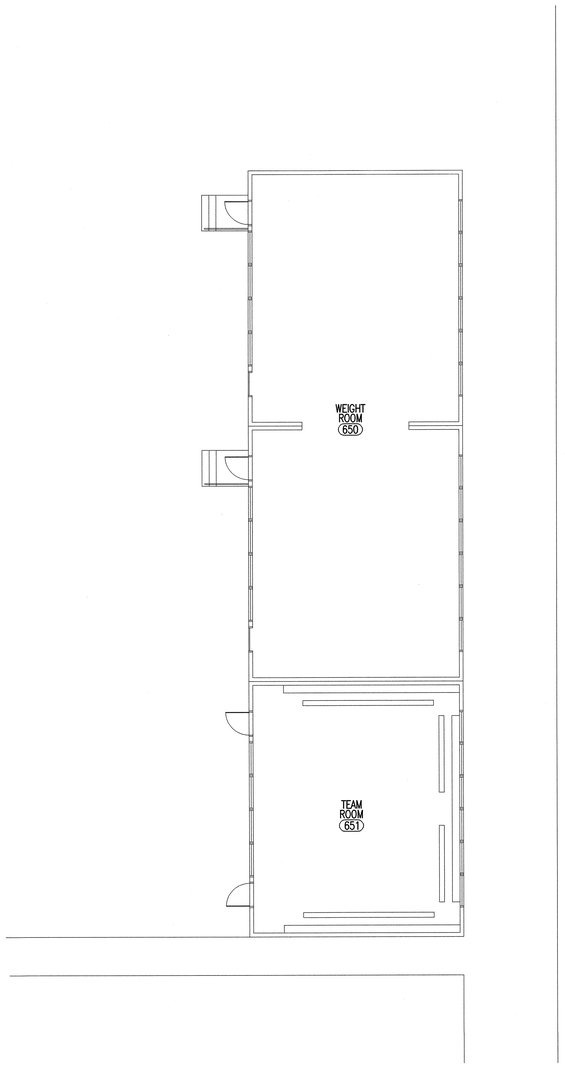

BUILDING X FLOOR PLAN

WEIGHT ROOM BUILDING

2

1/8"=1'-0"

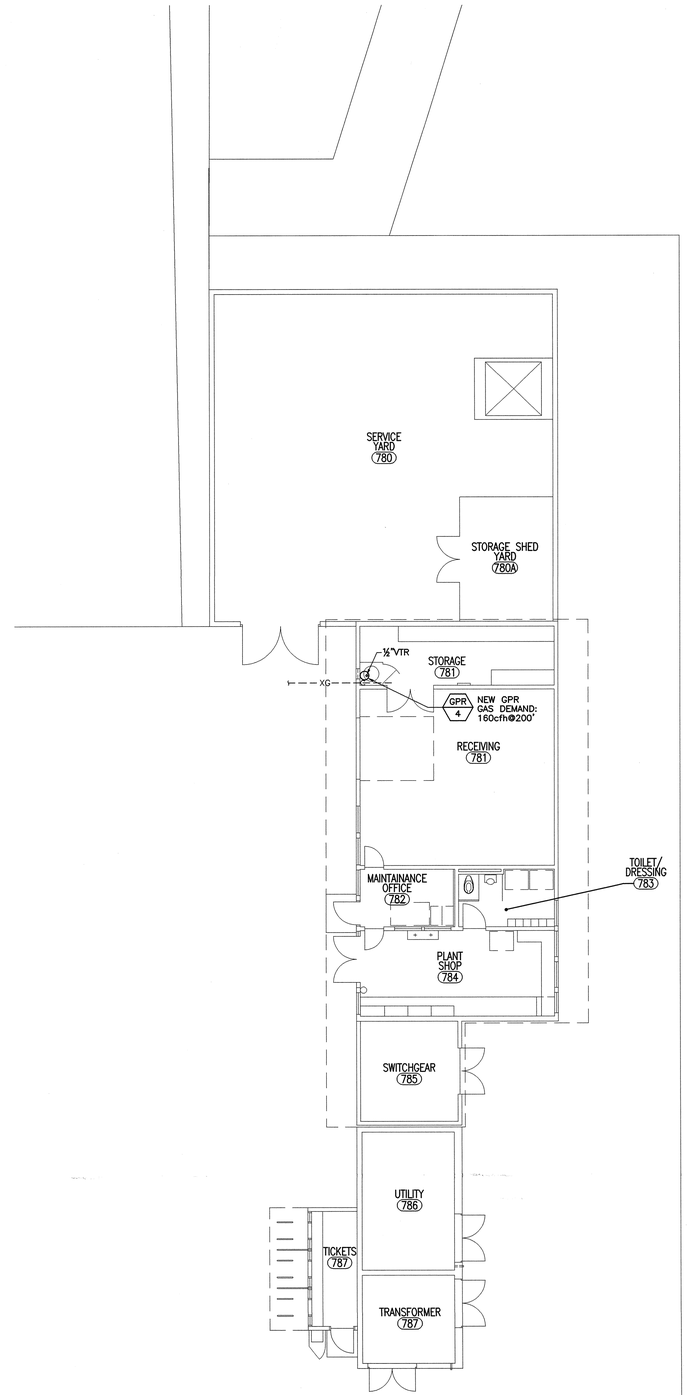

BUILDING S FLOOR PLAN

UTILITIES BUILDING

1

1/8"=1'-0"

KEY PLAN

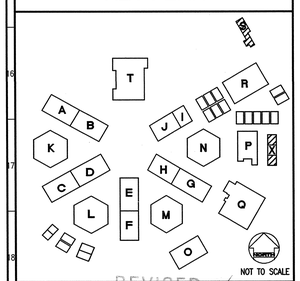

NOT TO SCALE

REVISED

IDENTIFICATION STAMP
DIV. OF THE STATE ARCHITECT
OFFICE OF REGULATION SERVICES

FILE NO. 19-H51
APPL. NO. 03-106434

AC.____ FLS. NCT SS.____

DATE____

MAY 1 2 2004

Dougherty ∷ Dougherty
Architecture · Planning · Interior Design
3194-D Airport Loop Drive
Costa Mesa, CA 92626
(714) 427-0277

Copyright © 2002 Dougherty + Dougherty

FTA
F.T. Andrews, Inc.
831 S. Hepler Blvd.
Azusa, CA 91702
Phone: (626) 772-9993
Fax: (626) 772-9788
Job Number: 220D4

Consultant Seal

Architect Seal

LA MIRADA HIGH SCHOOL MODERNIZATION

NORWALK - LA MIRADA UNIFIED SCHOOL DISTRICT
13520 ADELFA DRIVE LA MIRADA, CA 90638

CLASSROOMS S & X PLUMBING FLOOR PLANS

Date:	04-01-04
Job:	20237.50
Scale:	1/8" = 1'
Drawn:	
Revisions:	

P108

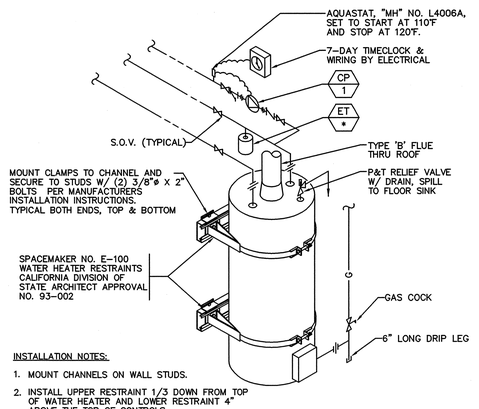

INSTALLATION NOTES:

1. MOUNT CHANNELS ON WALL STUDS.
2. INSTALL UPPER RESTRAINT 1/3 DOWN FROM TOP OF WATER HEATER AND LOWER RESTRAINT 4" ABOVE THE TOP OF CONTROLS.
3. INSTALL WATER HEATER TIGHT TO CHANNEL AND GUSSET ASSEMBLIES.

GAS WATER HEATER DETAIL — 1

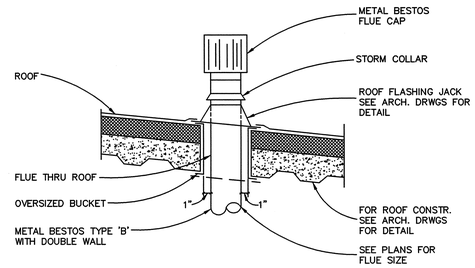

FLUE THROUGH ROOF — 2

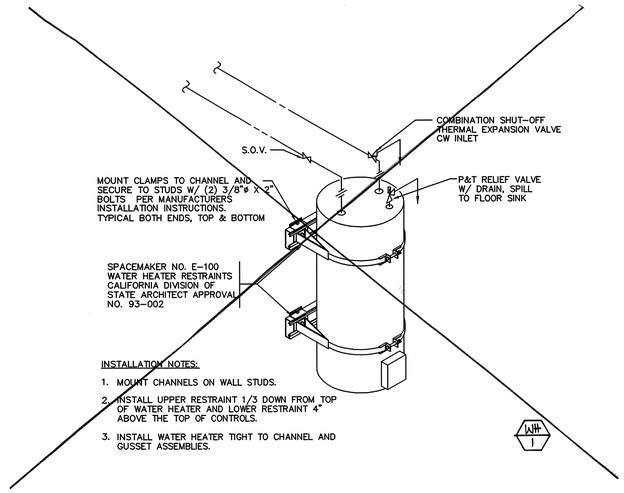

INSTALLATION NOTES:

1. MOUNT CHANNELS ON WALL STUDS.
2. INSTALL UPPER RESTRAINT 1/3 DOWN FROM TOP OF WATER HEATER AND LOWER RESTRAINT 4" ABOVE THE TOP OF CONTROLS.
3. INSTALL WATER HEATER TIGHT TO CHANNEL AND GUSSET ASSEMBLIES.

ELECTRIC WATER HEATER DETAILS — 3

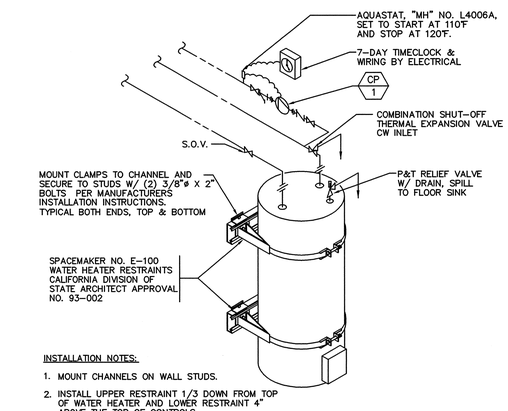

INSTALLATION NOTES:

1. MOUNT CHANNELS ON WALL STUDS.
2. INSTALL UPPER RESTRAINT 1/3 DOWN FROM TOP OF WATER HEATER AND LOWER RESTRAINT 4" ABOVE THE TOP OF CONTROLS.
3. INSTALL WATER HEATER TIGHT TO CHANNEL AND GUSSET ASSEMBLIES.

ELECTRIC WATER HEATER DETAIL — 4

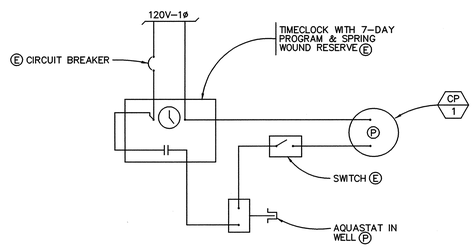

(E) ITEM INDICATED ON THE ELECTRICAL DRAWING AND SPECIFIED IN THE ELECTRICAL SECTIONS OF THE SPECIFICATION.

(P) ITEM INDICATED ON THE PLUMBING DRAWING AND SPECIFIED IN THE PLUMBING SECTIONS OF THE SPECIFICATION.

CIRC PUMP WIRING DIAGRAM — 5

NOTE:

(E) INDICATES ITEMS PROVIDED AND INSTALLED BY THE ELECTRICAL CONTRACTOR.

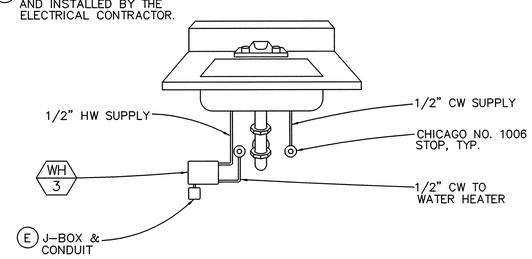

WATER HEATER DETAIL — 6

—

7

8

9

SCALE: AS NOTED

REVISED

IDENTIFICATION STAMP
DIV. OF THE STATE ARCHITECT
OFFICE OF REGULATION SERVICES
FILE NO. 19-H51
APPL. NO. 03-106434
AC ____ FLS. ____ SS ____
DATE ____

MAY 12 2004

Dougherty :: Dougherty
Architecture • Planning • Interior Design
3194-D Airport Loop Drive
Costa Mesa, CA 92626
(714) 427-0277

Copyright © 2002 Dougherty + Dougherty

FTA
Fire Architecture
831 S. Harbor Blvd.
Anaheim, CA 92805
Phone: (714) 772-9800
Fax: (714) 772-9788
Job Number: 02084

Architect Seal

Consultant Seal

LA MIRADA HIGH SCHOOL
MODERNIZATION
NORWALK - LA MIRADA UNIFIED SCHOOL DISTRICT
13520 ADELFA DRIVE LA MIRADA, CA 90638

PLUMBING DETAILS

Date:	04-01-04
Job:	20237.50
Scale:	1"=60'-0"
Drawn:	
Revisions:	

P110

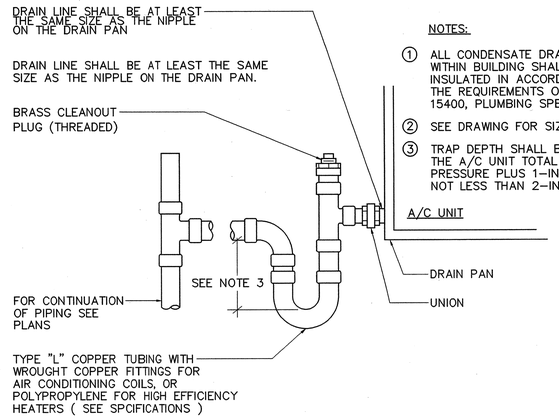

NOTES:

1. ALL CONDENSATE DRAIN LINES WITHIN BUILDING SHALL BE INSULATED IN ACCORDANCE WITH THE REQUIREMENTS OF SECTION 15400, PLUMBING SPECIFICATIONS.
2. SEE DRAWING FOR SIZES.
3. TRAP DEPTH SHALL BE EQUAL TO THE A/C UNIT TOTAL STATIC PRESSURE PLUS 1-INCH BUT NOT LESS THAN 2-INCHES.

CONDENSATE TRAP DETAIL — 1

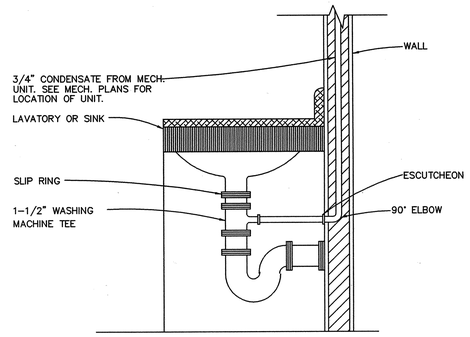

CONDENSATE TO TAILPIECE DETAIL — 2

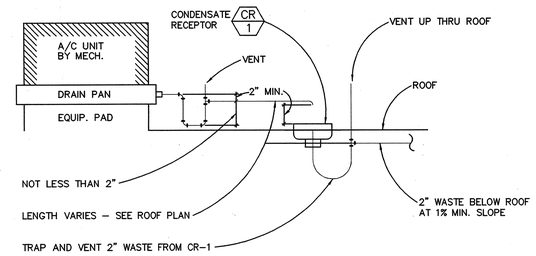

CONDENSATE DRAIN FOR ROOFTOP UNITS — 3

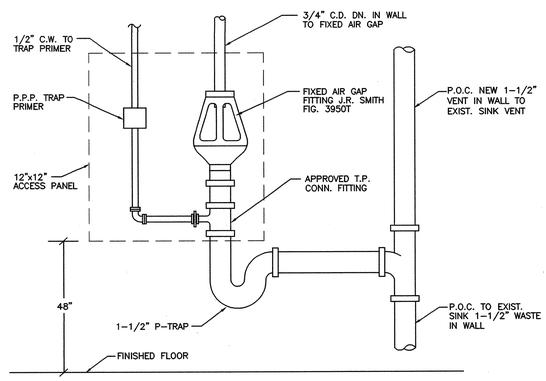

FIXED AIR GAP FITTING DETAIL — 4

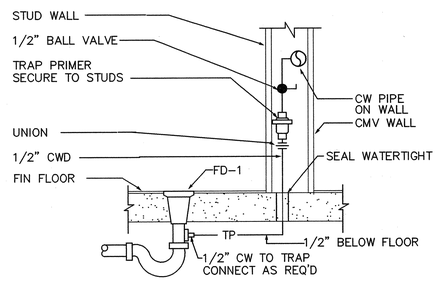

TRAP PRIMER DETAIL — 5

NOTES:

1. PROVIDE PROTECTIVE COATING OF ASPHALTIC MASTIC ON ALL RODS, NUTS & BOLTS.
2. BLUE REFLECTIVE PAVEMENT MARKERS SHALL BE INSTALLED SIX INCHES FROM EDGE OF PAINTED CENTERLINE ON THE THE SIDE NEAREST THE FIRE HYDRANT.

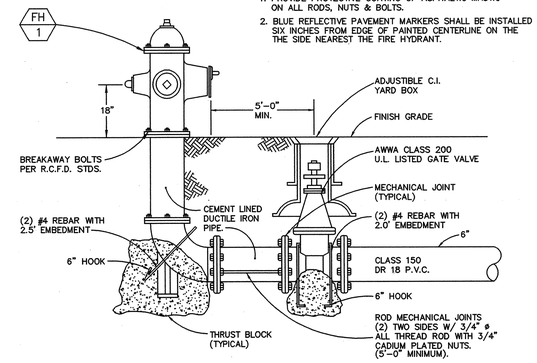

FIRE HYDRANT DETAIL — 6

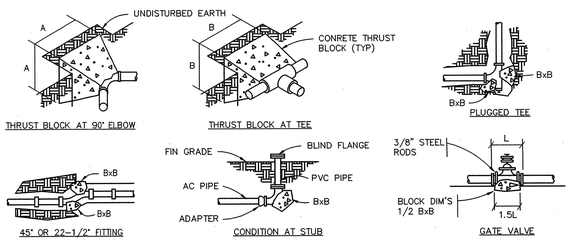

	90° ELBOW	TEE
PIPE SIZE	A	B
3" & SMALLER	18"	16"
4"	23"	17"
6"	34"	29"
8"	46"	37"
10"	56"	48"

NOTES:

1. THRUST BLOCKS SHALL BE INSTALLED AT EVERY CHANGE OF DIRECTION.
2. THRUST BLOCKS ARE FOR 150 LB. CLASS A/C PIPE, CAST IRON OR PVC PIPE BASE ON 1,000 LB/SF SOIL BEARING LOAD.

THRUST BLOCK DETAIL — 7

8

9

SCALE: NONE

REVISED

IDENTIFICATION STAMP
DIV. OF THE STATE ARCHITECT
OFFICE OF REGULATION SERVICES
FILE NO. 19-H51
APPL. NO. 03-106434
AC. ____ FLS. IN SS
DATE JAN 30 2003

Dougherty ■ Dougherty
Architecture · Planning · Interior Design
3194-D Airport Loop Drive
Costa Mesa, CA 92626
(714) 427-0277

Copyright © 2002 Dougherty + Dougherty

FTA
931 S. Harbor Blvd.
Anaheim, CA. 92805
Phone: (714) 772-9993
Fax: (714) 772-9996
Job Number: 22004

Architect Seal

Consultant Seal

LA MIRADA HIGH SCHOOL
MODERNIZATION - PHASE 1A
NORWALK - LA MIRADA UNIFIED SCHOOL DISTRICT
1352 ADELFA AVENUE LA MIRADA, CA 90638

PLUMBING DETAILS

Date:	1-30-03
Job:	20009.50
Scale:	1"=60'-0"
Drawn:	
Revisions:	

P111

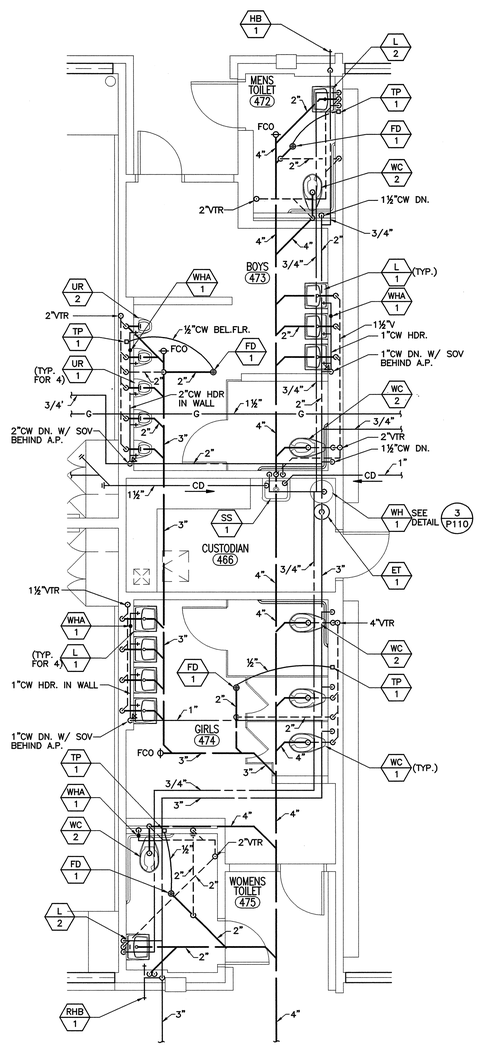

ENLARGED PLAN 3
BUILDING J 1/4"=1'-0"

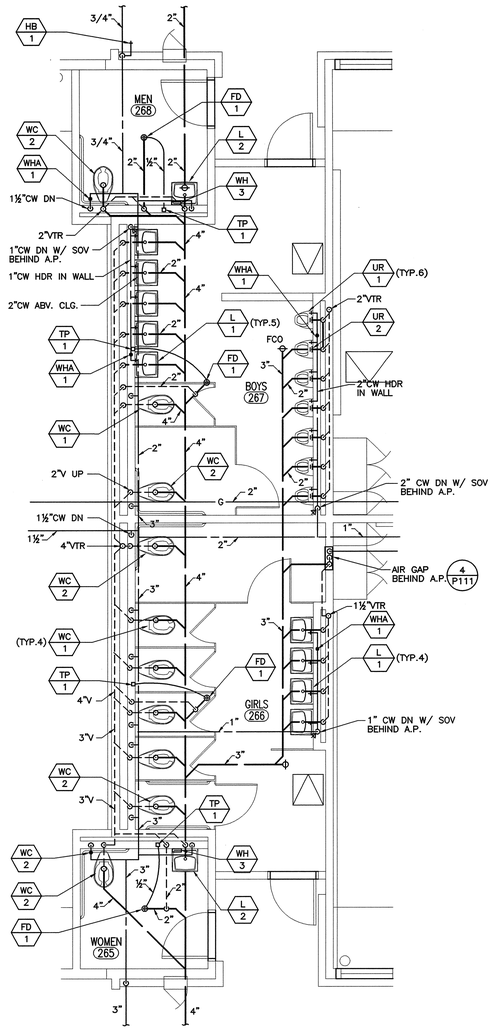

ENLARGED PLAN 2
BUILDING E-F 1/4"=1'-0"

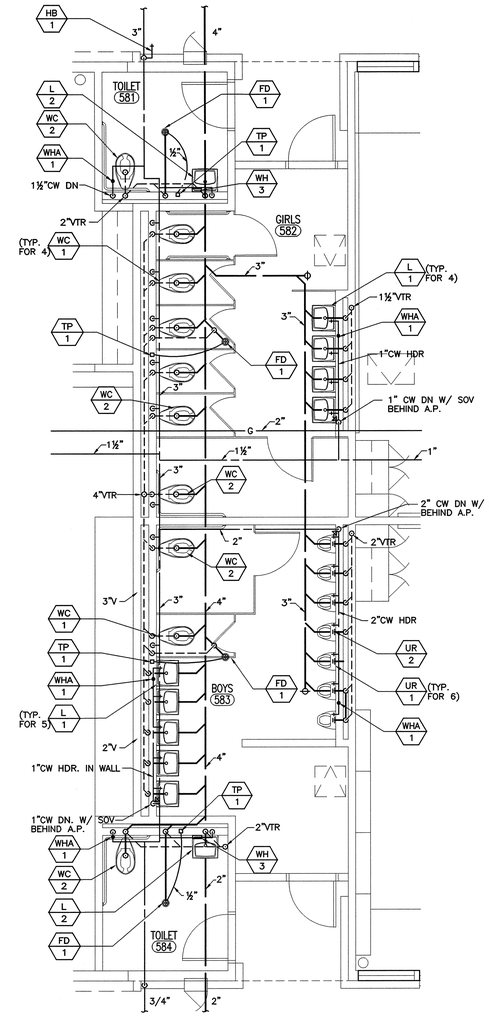

ENLARGED PLAN 1
BUILDING A-B 1/4"=1'-0"

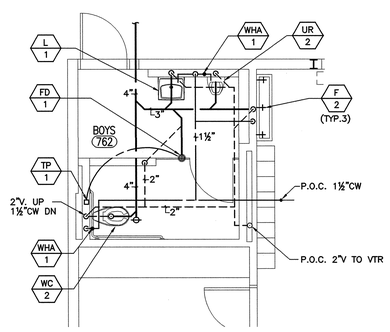

ENLARGED PLAN 6
BUILDING R 1/4"=1'-0"

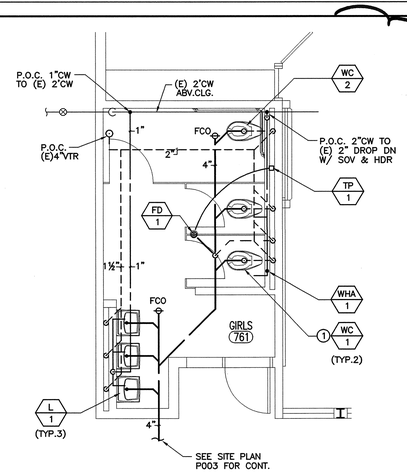

ENLARGED PLAN 5
BUILDING R 1/4"=1'-0"

ENLARGED PLAN 4
1/4"=1'-0"

REVISED
MAY 12 2004
IDENTIFICATION STAMP
DIV. OF THE STATE ARCHITECT
OFFICE OF REGULATION SERVICES
FILE NO. 19-H51
APPL. NO. 03-106434
AC. FLS SS
DATE

Dougherty + Dougherty
Architecture · Planning · Interior Design
3194-D Airport Loop Drive
Costa Mesa, CA 92626
(714) 427-0277
Copyright © 2002 Dougherty + Dougherty

FTA
F.T. Andrewslee
891 S. Harbor Blvd.
Anaheim, CA 92805
Phone: (714) 772-8255
Fax: (714) 772-0788
ABI Number: 22004

Architect Seal

Consultant Seal

LA MIRADA HIGH SCHOOL
MODERNIZATION
NORWALK - LA MIRADA UNIFIED SCHOOL DISTRICT
13520 ADELFA DRIVE LA MIRADA, CA 90638

BLDGS A-B, E-F, & J
PLUMBING
ENLARGED PLANS

Date:	04-01-04
Job:	20237.50
Scale:	1/4" = 1'
Drawn:	JS
Revisions:	

P301

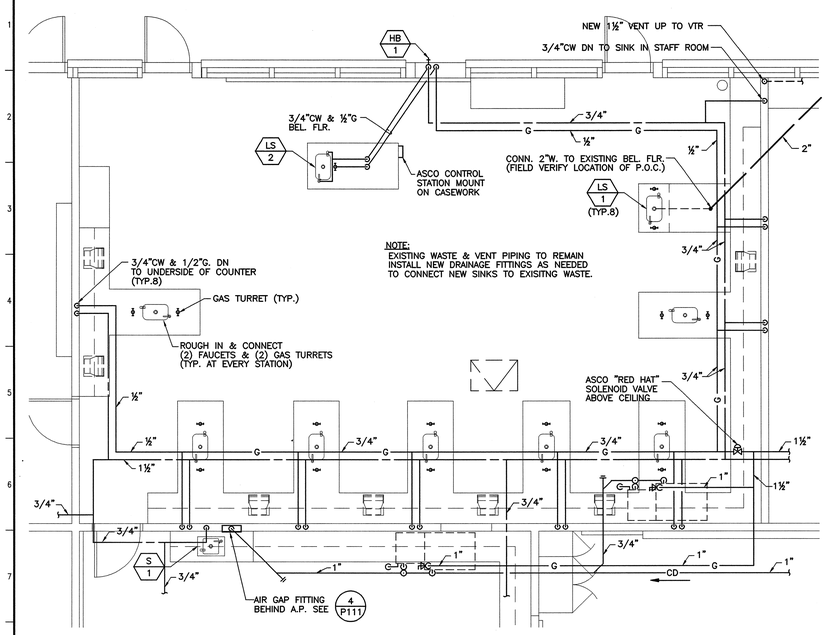

ENLARGED CLASSROOM FLOOR PLAN — 2
BUILDING E-F: SCIENCE LAB 274 — 1/4"=1'-0"

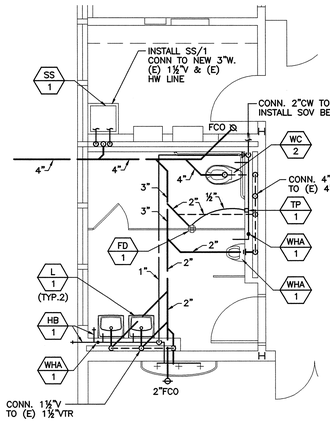

ENLARGED RESTROOM PLAN — 1
BUILDING P: MEN'S 613 — 1/4"=1'-0"

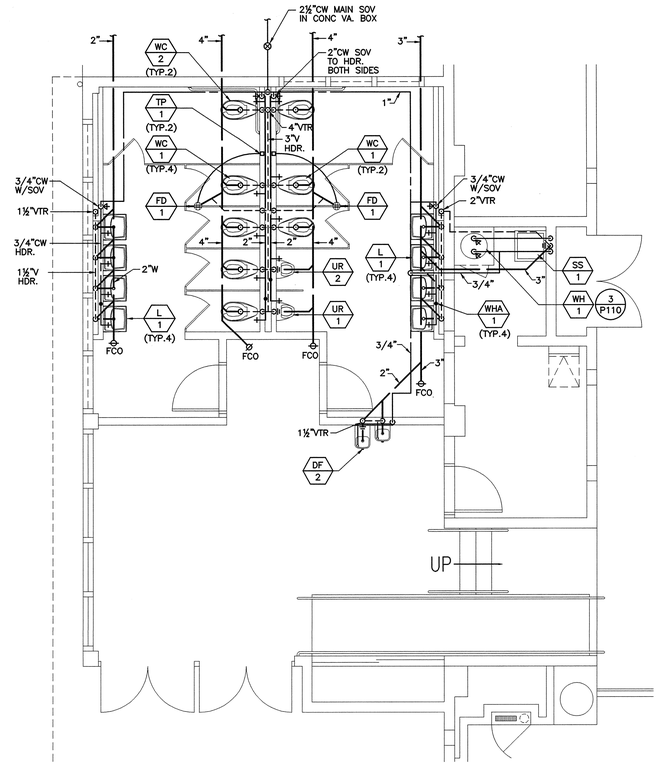

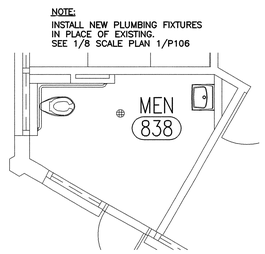

ENLARGED RESTROOM PLAN — 5
BUILDING K: MEN'S 838 — 1/4"=1'-0"

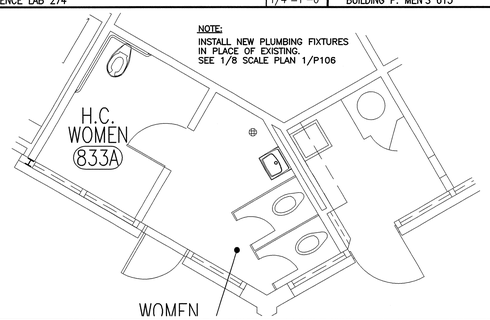

ENLARGED RESTROOM PLAN — 4
BUILDING K: WOMEN'S 833 — 1/4"=1'-0"

ENLARGED RESTROOM PLAN — 3
BUILDING Q: GIRLS & BOYS TOILETS 633 & 634 — 1/4"=1'-0"

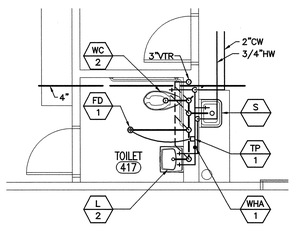

ENLARGED RESTROOM PLAN — 8
BUILDING N: TOILET 417 — 1/4"=1'-0"

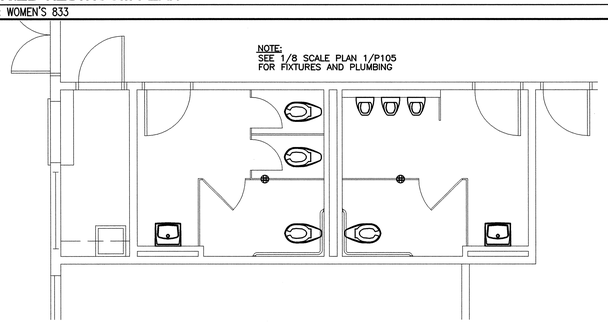

ENLARGED RESTROOM PLAN — 7
BUILDING T: BOYS 533 GIRLS 534 — 1/4"=1'-0"

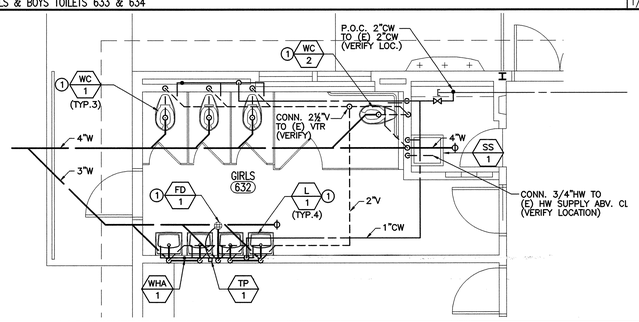

ENLARGED RESTROOM PLAN — 6
BUILDING O: GIRLS TOILET 632 — 1/4"=1'-0"

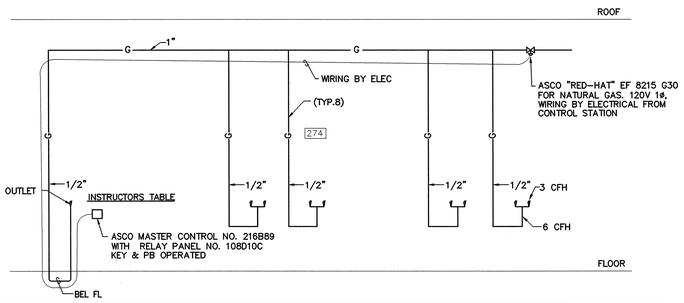

GAS PIPING SCHEMATIC — 11
BUILDING E-F: SCIENCE LAB 274 — 1/4"=1'-0"

10

ENLARGED PLAN — 9
BUILDING O: GIRLS TOILET 632 — 1/4"=1'-0"

CONSTRUCTION NOTES

KEY PLAN

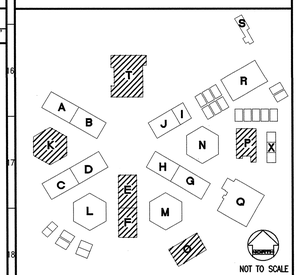

REVISED MAY 1 2 2004

IDENTIFICATION STAMP
DIV. OF THE STATE ARCHITECT
OFFICE OF REGULATION SERVICES
FILE NO. 19-H51
APPL. NO. 03-106434
AC.____ FLS. MT SS.____
DATE____

Dougherty ■ Dougherty
Architecture • Planning • Interior Design
3194-D Airport Loop Drive
Costa Mesa, CA 92626
(714) 427-0277

Copyright © 2002 Dougherty + Dougherty

FTA
P.T. Andrews, Inc.
831 S. Harbor Blvd.
Anaheim, CA 92805
Phone (714) 772-9383
Fax (714) 772-2594
Job Number: 2294

Architect Seal

Consultant Seal

LA MIRADA HIGH SCHOOL
MODERNIZATION
NORWALK - LA MIRADA UNIFIED SCHOOL DISTRICT
13520 ADELFA DRIVE LA MIRADA, CA 90638

ENLARGED
PLUMBING
FLOOR PLANS

Date:	04-01-04
Job:	20237.50
Scale:	1/8" = 1'
Drawn:	
Revisions:	

P302

GENERAL NOTES

A. SINGLE LINE DIAGRAM:

1. FEEDERS ARE SIZED FOR COPPER WITH 75C. (THW) INSULATION.
2. PROVIDE UFER GROUND ELECTRODE CONSISTING OF 30' OF BARE COPPER 4/0 CONDUCTOR LOCATED WITHIN AND NEAR BOTTOM OF BUILDING FOUNDATION WITH 2" MIN. CONCRETE ENCASEMENT. TERMINATE WELD UFER GROUND TO ADJACENT REBAR.
3. ROUTE TRANSFORMER GROUNDS TO SERVING SWITCHBOARDS GROUND BUS THRU SERVING FEEDER CONDUIT.
4. FEEDERS ARE BASED ON USE OF STEEL CONDUIT. PROVIDE CODE SIZED EQUIPMENT AND RACEWAY GROUND WIRES IF PLASTIC CONDUIT IS USED. FEEDER GROUND WIRES SHOWN ARE FOR BUILDING SERVICE GROUNDING.
5. ALL DISTRIBUTION BOARDS SHALL BE PROVIDED WITH GROUND BUS.
6. PROVIDE 4" HIGH CONCRETE HOUSEKEEPING PADS UNDER ALL FLOOR MOUNTED ELECTRICAL EQUIPMENT (INCLUDING SWITCHBOARDS AND TRANSFORMERS).
7. ALL CIRCUIT BREAKERS (MAIN SWITCHBOARD, DISTRIBUTION PANELS, PANELBOARDS) SHALL BE SERIES RATED FOR 65,000 AIC OR APPROVED EQUAL UNLESS OTHERWISE NOTED.
8. EQUIPMENT ENCLOSURES SHALL BE CLEARLY MARKED "CAUTION-SERIES RATED SYSTEM", IN COMPLIANCE WITH 1998 CEC SECTION 110-22. END-USE EQUIPMENT SHALL ALSO BE MARKED WITH THE HIGHER SERIES COMBINATION INTERRUPTING RATING AS PER 1998 CEC SECTION 240-83(c).

C. MECHANICAL EQUIPMENT NOTES

1. VERIFY EXACT LOCATION OF MECHANICAL EQUIPMENT CONTRACTOR PRIOR TO INSTALLATION OF CONDUIT.
2. ALL EQUIPMENT, DEVICES, SAFETY SWITCHES, JUNCTION BOXES CONNECTIONS, ETC. MOUNTED ON THE ROOF OR EXTERIOR SHALL BE WEATHERPROOF.
3. REFER TO MECHANICAL DRAWING CONTROL DIAGRAMS FOR ALL SENSORS, TIME CLOCKS, RELAYS, TIMERS, STARTERS, LINE AND LOW VOLTAGE CONDUIT AND PROVIDE AS REQUIRED.
4. SAFETY SWITCHES SHALL BE HORSEPOWER RATED WITH CURRENT LIMITING FUSES, SIZED PER THE MANUFACTURER'S RECOMMENDATION. SWITCHES SHALL HAVE "RK-1" FUSE REJECTION CLIPS.
5. ELECTRICAL PLANS DO NOT INDICATE MECHANICAL AND PLUMBING EQUIPMENT CONTROL. REFER TO MECHANICAL AND PLUMBING PLANS AND SPECIFICATIONS AND PROVIDE ALL CONDUIT, WIRE J-BOXES, OUTLET BOXES RELAY SWITCHES, TIME SWITCHES, CONTROL CIRCUITS, ETC. REQUIRED FOR A COMPLETE AND OPERABLE MECHANICAL AND PLUMBING INSTALLATION. ALL WIRE SHALL BE INSTALLED IN CODE SIZED CONDUIT.
6. LOCATIONS OF SAFETY SWITCHES AND CONNECTIONS FOR MECHANICAL AND PLUMBING EQUIPMENT ARE SHOWN DIAGRAMMATICALLY. VERIFY ACTUAL LOCATIONS WITH EQUIPMENT SHOP DRAWINGS AND LOCATE SAFETY SWITCHES LOCATED TO PROVIDE CODE REQUIRED CLEARANCES AND ACCESS. SAFETY SWITCHES LOCATED ON THE ROOF SHALL BE MOUNTED 30" MINIMUM ABOVE THE ROOF. IF THE MOUNTING OF SWITCHES DIRECTLY TO MECHANICAL EQUIPMENT IS NOT POSSIBLE, PROVIDE ANGLE IRON SUPPORT BRACKETS BOLTED TO THE ROOF FRAMING.

D. FIXTURE NOTES:

1. IT IS THE CONTRACTORS RESPONSIBILITY TO VERIFY ACTUAL CEILING CONSTRUCTION TYPE AS DEFINED ON THE ARCHITECTURAL DRAWINGS AND FURNISH ALL LIGHTING FIXTURES WITH THE CORRECT MOUNTING DEVICES WHETHER OR NOT SUCH VARIATIONS ARE INDICATED BY THE FIXTURE CATALOG NUMBER. THE CONTRACTOR SHALL VERIFY DEPTH OF ALL RECESSED LIGHTING FIXTURES WITH ARCHITECTURAL DRAWINGS PRIOR TO ORDERING FIXTURES. ANY DISCREPANCIES THAT WOULD CAUSE RECESSED FIXTURES NOT TO FIT INTO CEILING SHALL BE REPORTED TO THE ARCHITECT PRIOR TO ORDERING FIXTURES.
2. LIGHT FIXTURES RECESSED IN CEILING WHICH HAVE A ONE HOUR OR MORE FIRE RATING SHALL BE ENCLOSED IN A BOX WHICH HAS A FIRE RATING EQUAL TO THAT OF THE CEILING. PROVIDE MINIMUM OF 3" CLEAR FROM ALL SIDES AND TOP OF RECESSED LIGHT FIXTURES.
3. CEILING INSULATION SHALL BE INSTALLED TO ALLOW 3" MINIMUM CLEARANCE FROM SIDES AND TOP OF RECESSED LIGHT FIXTURES.
4. LAMPS FOR OWNER FURNISHED FIXTURES ARE FURNISHED BY OWNER. INSTALLED IN ELECTRICAL CONTRACT.
5. VERIFY MOUNTING HEIGHT OF ALL WALL MOUNTED FIXTURES WITH ARCHITECT.
6. REFER TO ARCHITECTURAL REFLECTED CEILING PLANS FOR EXACT LOCATION OF ALL LIGHT FIXTURES.
7. VERIFY VOLTAGE BEING SUPPLIED TO FIXTURES PRIOR TO ORDERING.
8. PENDANT MOUNTED FIXTURES SHALL BE ABLE TO SWING UP TO 45° WITHOUT STRIKING ANY OBJECT.
9. CIRCUIT FEEDING EMERGENCY BATTERY PACKS SHALL NOT BE SWITCHED.

E. SITE PLAN GENERAL NOTES:

1. ALL CONDUIT, STRUCTURES AND INSTALLATION FOR POWER AND TELEPHONE SITE DISTRIBUTION SYSTEM SHALL CONFORM WITH THE REQUIREMENTS OF THE SERVING UTILITY COMPANIES. VERIFY ALL REQUIREMENTS (MINIMUM BEND RADII, CONDUIT DEPTH, CONDUIT TYPE, ETC.) WITH THE UTILITIES PRIOR TO BID AND INCLUDE ALL COSTS IN BID.
2. CONTRACTOR SHALL OBTAIN POWER COMPANY CONSTRUCTION DRAWINGS PRIOR TO CONSTRUCTION AND SHALL INSTALL POWER CONDUIT AND STRUCTURES ACCORDING TO THE POWER COMPANY DRAWINGS.
3. POWER SERVICE CONDUITS SHALL BE FULLY CONCRETE ENCASED WITH RED CONCRETE.
4. VISIT SITE PRIOR TO BID TO REVIEW EXISTING TOPOGRAPHY, LANDSCAPING AND EXISTING CONDITIONS TO BECOME FAMILIAR WITH SLOPE CONDITIONS, EXISTING CONSTRUCTION AND LANDSCAPING. ADJUST CONDUIT ROUTING INDICATED TO AVOID RUNNING IN SLOPE CONDITIONS, TO MISS TREES AND TO AVOID DISTURBING EXISTING CONSTRUCTION WHERE POSSIBLE. REPAIR OR REPLACE ALL SPRINKLER SYSTEMS, CONDUIT WIRING, PIPING, ETC. DAMAGED BY ELECTRICAL WORK. RECONNECT EXISTING TO MAINTAIN COMPLETE AND OPERABLE SYSTEMS.
5. ELECTRICAL CONTRACTOR SHALL EXERCISE EXTREME CAUTION IN EXCAVATING AND TRENCHING ON THIS SITE TO AVOID EXISTING DUCTS, PIPING OR CONDUITS, ETC., AND TO PREVENT HAZARD TO PERSONNEL AND/OR DAMAGE TO EXISTING UNDERGROUND UTILITIES OR STRUCTURES. THE ENGINEER IS NOT RESPONSIBLE FOR THE LOCATION OF UNDERGROUND UTILITIES OR STRUCTURES, WHETHER OR NOT SHOWN OR DETAILED AND INSTALLED BY THIS OR ANY OTHER CONTRACTS. THE CONTRACTOR SHALL IMMEDIATELY NOTIFY THE OWNER SHOULD SUCH UNIDENTIFIED CONDITIONS BE DISCOVERED. THESE DRAWINGS AND SPECIFICATIONS DO NOT INCLUDE NECESSARY COMPONENTS FOR CONSTRUCTION SAFETY.
6. ALL EQUIPMENT, DEVICES, DISCONNECT SWITCHES, JUNCTION BOXES, CONNECTIONS, ETC., EXTERIOR TO THE BUILDING SHALL BE WEATHERPROOF.
7. SIGNAL CONDUITS SHALL BE SEPARATED FROM POWER CONDUITS +12" MINIMUM.

F. GENERAL NOTES:

1. PROVIDE EXPANSION AND DEFLECTION FITTINGS WITH BONDING JUMPER ON ALL CONDUITS AT ALL BUILDING EXPANSION OR SEISMIC JOINT CROSSING.
2. THE TOP OF ALL FLOOR STANDING SERVICE AND SWITCHBOARD EQUIPMENT SHALL BE BOLTED TO THE WALL WITHIN 3 FEET OF EACH END WITH 1/4" THICK ANGLE IRON OF P1000 UNISTRUT AND FITTINGS.
3. PORTIONS OF THESE PLANS HAVE BEEN DERIVED FROM INFORMATION TAKEN FROM ORIGINAL ELECTRICAL PLANS. THE INTENT OF THESE PLANS IS TO PROVIDE A COMPLETE AND OPERABLE SYSTEM.
4. IT IS THE CONTRACTOR'S RESPONSIBILITY TO VISIT THE SITE AND BECOME THOROUGHLY FAMILIAR WITH ALL FEATURES OF THE BUILDINGS AND SITE WHICH MAY AFFECT THE PROPER PERFORMANCE OF THIS WORK.
5. IT IS THE CONTRACTOR'S RESPONSIBILITY TO REFER TO THE DRAWINGS OF OTHER TRADES FOR ADDITIONAL DETAILS AND REQUIREMENTS WHICH AFFECT THE PROPER PERFORMANCE OF THIS WORK.
6. DURING THE COURSE OF CONSTRUCTION, PROVIDE TEMPORARY LIGHT AND POWER AS REQUIRED FOR ALL TRADES THROUGH COMPLETION OF THIS PROJECT.
7. ALL WORK AND MATERIAL IS NEW AND INCLUDED IN THE CONTRACT UNLESS SPECIFICALLY INDICATED AS EXISTING.
8. ALL DIMENSIONS AND LOCATIONS OF EQUIPMENT ARE APPROXIMATE. CONTRACTOR SHALL FIELD VERIFY ALL DIMENSIONS.
9. VERIFY EXACT LOCATIONS AND MOUNTING HEIGHTS OF WALL MOUNTED ELECTRICAL DEVICES WITH ARCHITECT.
10. SLEEVES SET IN FIRE WALLS SHALL BE CAULKED BETWEEN SLEEVE, CONDUIT AND RACEWAYS PASSING THRU THE SLEEVE, WITH FIREPROOF SEALANT.
11. WHERE CONDUITS PASS THROUGH FLOORS OR RATED WALLS, THE OPENINGS AROUND THE CONDUITS SHALL BE SEALED WITH 3M FIRE SAFING. CONDUIT FLOOR PENETRATIONS WITH RATED CHASES SHALL BE SEALED WITH BARRIER SEALANTS. THE 3M SEALANT USED SHALL BE PROVIDED BY LOCAL AUTHORITIES HAVING JURISDICTION.
12. ELECTRICAL DEVICES SHALL BE OFF-SET A MINIMUM OF 24" ON EITHER SIDE OF WALL.
13. WHERE NEW DEVICES (AND ASSOCIATED CONDUIT) CAN NOT PHYSICALLY BE MOUNTED CONCEALED IN WALLS RUN IN WIREMOLD SURFACE RACEWAY/WIREWAY (AND DEVICES SHALL BE MOUNTED ON SURFACE OUTLET BOXES). REFER TO SPECIFICATIONS. PROVIDE SIZE OF RACEWAY TO ACCOMMODATE THE REQUIRED CONDUCTORS. WHERE CONDUIT IS INDICATED, PROVIDE SURFACE RACEWAY WITH AN EQUAL CROSS SECTION TO THE DIAMETER OF THE CONDUIT INDICATED.
14. MARK AL ALL RECEPTACLES AND J-BOXES WITH CIRCUIT NUMBERS.

G. DEMOLITION NOTES:

REFER TO ARCHITECTURAL DEMOLITION DRAWINGS FOR BUILDINGS BEING MODERNIZED IN THIS PHASE AND FOR DEMOLITION AREAS AND EXISTING WALLS. THE SCOPE OF THE DEMOLITION WORK SHALL INCLUDE ALL LABOR, MATERIALS, SERVICES AND EQUIPMENT REQUIRED FOR THE REMOVAL OF EXISTING ELECTRICAL EQUIPMENT. VERIFY ALL SPECIFIC DEMOLITION WORK PRIOR TO COMMENCING. THIS WORK INCLUDES, BUT IS NOT LIMITED TO THE FOLLOWING:

1. ALL EXISTING ELECTRICAL SWITCHGEAR, PANELBOARDS, PULLBOXES, ETC. SHALL BE REMOVED UNLESS SPECIFICALLY NOTED OTHERWISE. REFER TO PLANS FOR SPECIFIC DEMOLITION REQUIREMENTS.
2. REMOVE ALL EXPOSED CONDUIT, WIRE, OUTLETS, DISCONNECT SWITCHES AND ELECTRICAL MOUNTING HARDWARE FOR MECHANICAL EQUIPMENT BEING REMOVED. PROVIDE WEATHERPROOF CAPS ON ALL CONDUIT PENETRATING ROOF AND ABANDON CONDUIT. REPAIR ROOFING DAMAGED BY REMOVAL OF EXISTING ELECTRICAL.
3. DISCONNECT ABANDONED CIRCUITS AT PANELBOARDS AND REMOVE WIRE. LABEL ALL ABANDONED CIRCUIT BREAKERS, "SPARE".
4. ALL EXISTING LIGHT FIXTURES, POWER AND SIGNAL DEVICES IN BUILDINGS BEING MODERNIZED SHALL BE REMOVED UNLESS NOTED OTHERWISE.
5. REMOVE ALL EXISTING EXPOSED CONDUIT, SURFACE RACEWAYS AND CONDUIT CONCEALED IN EXISTING CONSTRUCTION THAT IS TO BE REMOVED. PROVIDE CONDUIT AND WIRING AS REQUIRED TO MAINTAIN OPERATION OF DEVICES TO REMAIN.
6. ALL EXISTING FIRE ALARM, CLOCK, DATA, AND TELEVISION DEVICES, AND ASSOCIATED CONDUIT, WIRING, AND OUTLET BOXES NOT INDICATED AS REMAINING, SHALL BE REMOVED. ALL EXISTING INTRUSION DETECTION DEVICES TO BE PROTECTED IN PLACE.
7. DISCONNECT ABANDONED CIRCUITS AT PANELBOARDS AND REMOVE WIRE. WHERE EXISTING WALLS AND CEILINGS ARE TO REMAIN, PROVIDE BLANK COVERS OR PLATES FOR OUTLETS WHERE FIXTURES OR DEVICES ARE REMOVED UNDER THIS CONTRACT. PRIME BLANK PLATES FOR CEILING OUTLETS AND PAINT TO MATCH SURROUNDING AREA.
8. WHERE NEW PARTITIONS OR OTHER CONSTRUCTION WILL COVER EXISTING OUTLETS MAKING THEM INACCESSIBLE, MOVE THESE OUTLETS AND CONDUITS AS REQUIRED, OR MAKE OTHER PROVISIONS SO THAT THE OUTLETS WILL REMAIN ACCESSIBLE.
9. WHERE POSSIBLE, INSTALL ALL NEW CONDUITS CONCEALED IN WALLS, CEILING OR UNDERFLOOR SPACE.
10. SEAL ALL ABANDONED FLOOR PENETRATIONS IN MANNER ACCEPTABLE TO THE ARCHITECT.
11. EXISTING MAIN SWITCHBOARD SHALL BE REMOVED. EXISTING PANELBOARDS WITHIN BUILDINGS SHALL BE BACKFED. REFER TO SINGLE LINE DIAGRAM AND FLOOR PLANS FOR CONNECTION.
12. ALL EXISTING WIRE FEEDING DEVICES BEING DEMOLISHED SHALL BE REMOVED FROM CONDUIT.
13. ALL EXISTING CONDUIT, THAT INTERFERES WITH ANY NEW CONSTRUCTION SHALL BE CUT BACK AS REQUIRED TO CLEAR NEW CONSTRUCTION.
14. REMOVE ALL ELECTRICAL OUTLETS, CONDUITS AND CONDUCTORS FROM WALLS UNDERGOING STRUCTURAL MODIFICATIONS. PROVIDE CONDUIT AND WIRING TO MAINTAIN POWER AND SIGNAL OPERATION OF THE REMAINING OUTLETS.
15. REFER TO ARCHITECTURAL DRAWINGS FOR CEILING REMOVAL LOCATIONS. EXCEPT AS NOTED OTHERWISE, DISCONNECT AND REMOVE ALL EXISTING CEILING MOUNTED LIGHTING FIXTURES, SMOKE HEAT DETECTORS, OUTLETS AND JUNCTION BOXES, SPEAKERS, EXPOSED WIRING, RACEWAYS, AND ALL OTHER ELECTRICAL DEVICES AND HARDWARE ATTACHED TO THE CEILING.
16. ALL CONDUITS RISING FROM BELOW GRADE TO AREAS WHERE PARTITIONS, WALLS, AND/OR OTHER CONSTRUCTION ENTITIES ARE INDICATED AS BEING REMOVED SHALL BE CUT TO BELOW FINISH FLOOR, CAPPED, AND ABANDONED. PROVIDE PATCHING AS REQUIRED.
17. RELOCATE EXISTING WIRING, CABLING, CONDUITS AND OUTLETS FROM AREAS WHERE PLENUMS OR ROOF OPENINGS ARE BEING PROVIDED.
18. REMOVE ALL EXPOSED CONDUIT, WIRE, OUTLETS, DISCONNECT SWITCHES AND ELECTRICAL MOUNTING HARDWARE FOR EQUIPMENT REMOVED.
19. BLANK OFF UNUSED AND/OR ABANDONED OUTLETS WITH STAINLESS STEEL PLATES.
20. EXISTING TELEPHONE SYSTEM HEADEND EQUIPMENT, AND EXTERIOR SPEAKERS ARE TO REMAIN PROTECTED IN PLACE.
21. EXISTING CCTV SYSTEM EQUIPMENT AND ASSOCIATED CONDUIT AND WIRING ARE TO REMAIN PROTECTED IN PLACE.
22. EXISTING TELEPHONE SYSTEM CABLING FOR HANDSETS, SPEAKERS AND ASSOCIATED CONDUITS AND JUNCTION BOXES SHALL BE REMOVED UNLESS NOTED OTHERWISE. PROVIDE NEW TELEPHONE SYSTEM CONDUIT AND CABLING TO EXISTING SPEAKERS AND NEW HANDSET LOCATIONS, UNLESS NOTED OTHERWISE.
23. PERFORM CUTTING AND PATCHING OF THE CONSTRUCTION WORK WHICH MAY BE REQUIRED FOR THE PROPER INSTALLATION OF ELECTRICAL WORK OR REMOVAL OF EXISTING ELECTRICAL EQUIPMENT. PATCHING SHALL BE OF THE SAME MATERIALS, WORKMANSHIP AND FINISH AS AND ACCURATELY MATCH SURROUNDING WORK TO THE SATISFACTION OF THE ARCHITECT.
24. ALL REMOVED MATERIALS AND EQUIPMENT WHICH, IN THE OPINION OF THE ARCHITECT, ARE SALVAGEABLE SHALL REMAIN THE PROPERTY OF THE OWNER. DELIVER SUCH SALVAGED MATERIALS AND EQUIPMENT ON PREMISES AS DIRECTED, AND NEATLY PILE OR STORE THEM AND PROTECT FROM DAMAGE. WHERE MATERIALS AND EQUIPMENT HAS BEEN REMOVED AND NOT REPLACED THE EXPOSED SURFACE BEHIND MATERIAL OR EQUIPMENT SHALL BE PAINTED TO MATCH SURROUNDING SURFACES. DO NOT REUSE MATERIALS AND EQUIPMENT, UNLESS SPECIFICALLY INDICATED ON PLANS OR SPECIFIED. REMOVE FROM PREMISES AND DISPOSE OF ALL MATERIALS CONSIDERED BY ARCHITECT TO BE SCRAP.

H. PHASING

1. REFER TO SPECIFICATIONS FOR PHASING OF WORK.
2. ALL ELECTRICAL AND SIGNAL IN ALL OCCUPIED FACILITIES OF THE CAMPUS ARE TO REMAIN OPERATIONAL DURING THE ENTIRE CONTRACT PERIOD. ANY INTERRUPTION OF THE ELECTRICAL POWER OR SIGNAL SYSTEMS FOR THE PERFORMANCE OF THIS WORK SHALL BE AT THE CONVENIENCE OF THE DISTRICT AND PERFORMED ONLY AFTER CONSULTATION WITH THE DISTRICT. WORK INVOLVING OUTAGES SHALL BE ONLY AT SUCH A TIME AND OF SUCH DURATION AS APPROVED IN WRITING. WORK INVOLVING OUTAGES FOR THE WORK REQUIRED TO CONNECT NEW EQUIPMENT AND DISCONNECT EXISTING EQUIPMENT SHALL BE PERFORMED AT THE CONVENIENCE OF THE DISTRICT.
3. PROVIDE OVERTIME WORK; DOUBLE SHIFT WORK; NIGHTTIME WORK; SATURDAY, SUNDAY, AND HOLIDAY WORK TO MEET PHASING SCHEDULE.
4. WHEN WORK INVOLVING POWER AND/OR SIGNAL SYSTEM DISRUPTIONS TO EXISTING AREAS IS INITIATED, THE WORK SHALL PROCEED ON A CONTINUOUS BASIS WITHOUT STOPPING UNTIL SYSTEMS ARE RESTORED TO THE AFFECTED AREAS.
5. THE CONTRACTOR SHALL REQUEST IN WRITING TO THE DISTRICT A MINIMUM OF THREE WEEKS IN ADVANCE, FOR ANY PROPOSED ELECTRICAL OR SIGNAL SYSTEM OUTAGE.
6. THE FIRST PHASE SHALL INCLUDE THE INTERLOCKING OF THE NEW AND EXISTING FIRE ALARM CONTROL PANELS. INTERLOCKING SHALL BE SUCH THAT NEW OR EXISTING INITIATING DEVICES SHALL SIGNAL NEW AND EXISTING NOTIFICATION DEVICES THROUGHOUT THE CAMPUS. PROVIDE ALL NECESSARY WIRING AND COMPONENTS. PROVIDE PERMANENT INSTRUCTIONS AT EACH FIRE ALARM CONTROL PANEL WITH DIRECTION ON HOW TO RESET DEVICES AND CONTROL PANELS. THE EXISTING FIRE ALARM CONTROL PANEL AND INTERLOCKING COMPONENTS SHALL BE REMOVED UPON COMPLETION OF THE FINAL CONSTRUCTION PHASE.

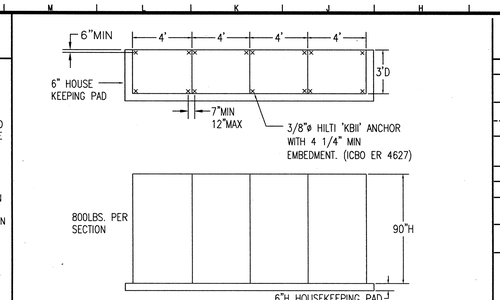

MAIN SWITCHBOARD ANCHORAGE DETAIL — G4

1/4"=1'-0"

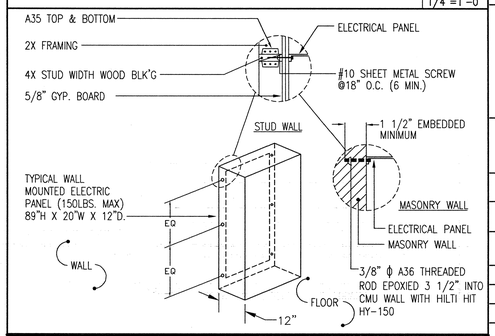

PANEL ANCHORAGE DETAIL — G8

NONE

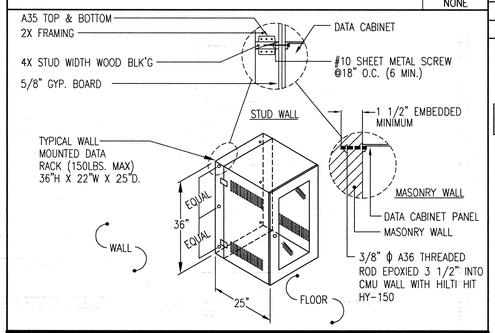

DATA CABINET ANCHORAGE DETAIL — G12

NONE

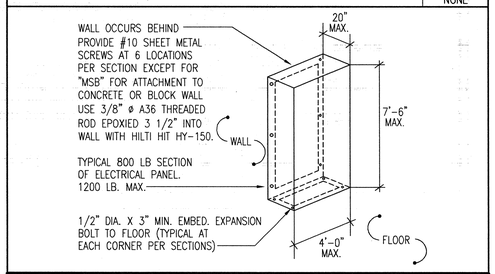

DISTRIBUTION PANEL ANCHORAGE DETAIL — G15

NONE

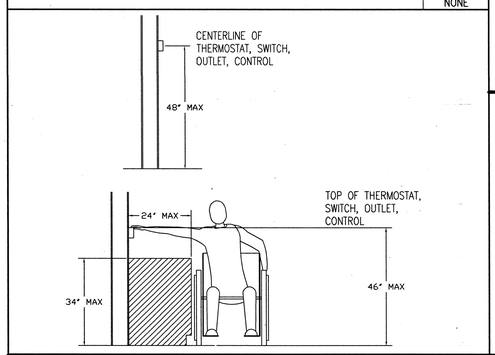

MOUNTING HEIGHT OVER OBSTRUCTION — G19

NONE

ELECTRICAL SYMBOLS

- WIRING/CONDUIT CONCEALED IN OR ABOVE CEILING
- WIRING/CONDUIT CONCEALED IN OR UNDER FLR.
- WIRING/CONDUIT EXPOSED
- HOMERUN TO PANELBOARD CIRCUITS AS NOTED
- CONDUIT TURNED UP
- CONDUIT TURNED DOWN
- C — CLOCK SYSTEM-1"C. WITH CONDUCTORS AS SPECIFIED
- P — PUBLIC ADDRESS SYSTEM-1"C. WITH CONDUCTORS AS SPECIFIED
- T1 — TELECOMMUNICATION SYSTEM-1"C. WITH ONE SET OF CONDUCTORS AS SPECIFIED.
  T2 - 1"C. WITH TWO SETS OF CONDUCTORS AS SPECIFIED
  T3 - 1"C. WITH THREE SETS OF CONDUCTORS AS SPECIFIED
  T4 - 1 1/4"C. WITH FOUR SETS OF CONDUCTORS AS SPECIFIED
- D1 — COMPUTER/DATA PROCESSING SYSTEM-3/4"C. FOR CONDUCTORS
  D2 - 1"C. W/ TWO SETS OF CONDUCTORS
  D3 - 1 1/4"C. W/ THREE SETS OF CONDUCTORS
  D4 - 1 1/4"C. W/ FOUR SETS OF CONDUCTORS
  D5 - 1 1/4"C. W/ FIVE SETS OF CONDUCTORS
  D6 - 1 1/2"C. W/ SIX SETS OF CONDUCTORS
  D8 - 2" C. W/ EIGHT SETS OF CONDUCTORS
- M1 — MICROPHONE SYSTEM-1"C. WITH ONE CABLE SPECIFIED
  M2 - 1"C. WITH TWO CABLES AS SPECIFIED
  M3 - 1"C. WITH THREE CABLES AS SPECIFIED
- TV — TELEVISION SYSTEM-1"C. WITH CONDUCTORS AS SPECIFIED
- ID — INTRUSION DETECTION SYSTEM-1"C.O.
- F — FIRE ALARM SYSTEM-1"C. WITH FIRE ALARM SYSTEM CONDUCTORS AS SPECIFIED
- 2-#12, 3/4" CONDUIT
- 3-#12, 3/4" CONDUIT
- 4-#12, 3/4" CONDUIT
- 5-#12, 3/4" CONDUIT
- 6-#12, 3/4" CONDUIT
- 7-#12, 3/4" CONDUIT
- 8-#12, 3/4" CONDUIT
- 9-#12, 1" CONDUIT
- CEILING / WALL / FLOOR
- LIGHTING OUTLET WITH FIXTURE AS NOTED
- FLUORESCENT FIXTURE POCHED INDICATES EMERGENCY POWER SOURCE
- TWIN HEAD EMERGENCY LIGHT FIXTURE WITH BATTERY PACK
- EXIT SIGN WITH ARROW AS INDICATED
- SINGLE RECEPTACLE, 120V 20 AMP △1 +15" UNO
- DUPLEX RECEPTACLE, 120V, 20 AMP △1 +15" UNO
- DOUBLE DUPLEX RECEPTACLE, 120V 20 AMP +15" UNO △1
- TELEPHONE OUTLET, 2-GANG BOX WITH ONE (1) LEVEL 5E CABLE TO TELEPHONE HEADEND, +15" A.F.F.
- DATA OUTLET, WITH SINGLE UNIVERSAL OUTLET CONNECTOR ON FLUSH WALL MOUNTED OUTLET BOX, +15". PROVIDE 3/4"C. (TO ACCESSIBLE CEILING SPACE, IF APPLICABLE) AND ONE LEVEL 5E CABLE AS SPECIFIED TO DATA RACK, UNLESS NOTED OTHERWISE.
- DUAL DATA OUTLET, WITH DUPLEX UNIVERSAL OUTLET CONNECTOR ON FLUSH WALL MOUNTED OUTLET BOX, +15". PROVIDE 1"C. (TO ACCESSIBLE CEILING SPACE, IF APPLICABLE) AND TWO LEVEL 5E CABLES AS SPECIFIED TO DATA RACK, UNLESS NOTED OTHERWISE.
- JUNCTION BOX (J-BOX)
- ISOLATED GROUND RECEPTACLE 120V, 1PH, 20 AMP, +15" UNO
- SPECIAL RECEPTACLE △1 SIZE AS REQUIRED
- WP — WEATHERPROOF SPEAKER FLUSH IN MOUNTED BACKBOX, +90"
- S — SPEAKER FLUSH IN MOUNTED BACKBOX, +90"
- M — MICROPHONE OUTLET, +42" UNO
- TV — TELEVISION OUTLET, +84" UNO
- DIMMER SWITCH +42". DIMMERS SHALL BE 2000 WATT, U.N.O.
- MAGNETIC DOOR HOLD OPEN
- CLASS PASSING BELL, +90"
- WP — OCCUPANCY SENSOR, +42" UNO
- BACKBOX AND CONDUIT FOR DISTRICT INSTALLED DOOR CONTACT
- SECURITY SIREN, +90" UNO △1
- BACKBOX FOR DISTRICT INSTALLED CEILING MOUNTED MOTION SENSOR
- BACKBOX FOR DISTRICT INSTALLED ACCESS KEYPAD +42" UNO WITH LOCKABLE COVER
- SURFACE RACEWAY WITH OUTLETS 15" O.C. UNO - WIREMOLD 4000 SERIES
- TOGGLE SWITCH-EACH SUBSCRIPT (LIKE "a","b","c") INDICATES INDIVIDUAL SWITCH, +42" UNO
  2- 2 POLE — P- PILOT LIGHT
  3- 3 WAY — MC- MOMENTARY CONTACT
  4- 4 WAY — M- MOTOR RATED
  K- KEYED
- MOTOR OUTLET
- PANELBOARD
- TERMINAL CABINET
- MAIN DISTRIBUTION PANEL
- DISCONNECT SWITCH. MOUNT ON EQUIPMENT +36". PROVIDE SWITCH AND FUSE PER EQUIPMENT MANUFACTURER'S REQUIREMENTS.
- MOTOR STARTER, SIZE AS NOTED
- COMBINATION DISCONNECT SWITCH AND MOTOR STARTER, SIZE AS NOTED MOUNT ON EQUIPMENT +36". PROVIDE SWITCH AND FUSE PER EQUIPMENT MANUFACTURER'S REQUIREMENTS.
- T — TRANSFORMER
- PUSHBUTTON, +48"
- R — RELAY
- FINAL CONNECTION BY CONTRACTOR
- THERMOSTAT
- CLOCK OUTLET WITH CLOCK TYPE AS INDICATED WITH BUZZER, +90", UNO
- 2 — PLAN NOTE CALL OUT. REFER TO CORRESPONDING PLAN FOR SPECIFICATIONS OR REQUIREMENTS
- A / E-1 — PANEL CALLOUT, (PANEL "A") AND SHEET NUMBER WHERE PANEL SCHEDULE IS LOCATED
- 2 A / 144 — FIXTURE TYPE. TOTAL NUMBER OF WATTS
- EF / 1 — MECHANICAL EQUIPMENT CALLOUT. REFER TO MECHANICAL DRAWINGS FOR EXACT LOCATIONS AND REQUIREMENTS OF MECHANICAL EQUIPMENT.

ABBREVIATIONS

A, AMP	AMPERE(S)
AF	AMP-FUSE
AFF	ABOVE FINISH FLOOR
AS	AMP-SWITCH
C.B.	CIRCUIT BREAKER
CIRC.	CIRCUIT
C.O.	CONDUIT ONLY
CONN.	CONNECTED
EM	EMERGENCY BATTERY PACK
EMS	ENERGY MANAGEMENT SYSTEM
EPO	EMERGENCY POWER OFF
F	FUSE
GFCI	GROUND FAULT CIRCUIT INTERRUPTER
GFP	GROUND FAULT PROTECTION
GND	GROUND
HOA	HAND-OFF-AUTO
HP	HORSEPOWER
J	JUNCTION
KEC	KITCHEN EQUIPMENT CONTRACTOR
KVA	KILOVOLT-AMP
KW	KILOWATT
L.C.L.	LONG CONTINUOUS LOAD
L.O.	LUGS ONLY
LV	LOW VOLTAGE
MCC	MOTOR CONTROL CENTER
N.I.C.	NOT IN CONTRACT
NL	NIGHT LIGHT
N.T.S.	NOT TO SCALE
OFCI	OWNER-FURNISHED, CONTRACTOR INSTALLED
PC	PHOTOCELL CONTROL
P.O.C.	POINT OF CONNECTION
PROVIDE	FURNISH, INSTALL AND CONNECT
R	RELAY
RGS	RIGID GALVANIZED STEEL
UNO	UNLESS NOTED OTHERWISE
V	VOLT(S)
VA	VOLT-AMP(S)
W	WATT(S)
WP	WEATHERPROOF
WT	WATER TIGHT

ELECTRICAL EQUIPMENT BRACING AND ANCHORAGE

ALL ELECTRICAL EQUIPMENT AND CONDUITS SHALL BE INSTALLED WITH SEISMIC RESTRAINTS PER "GUIDELINES FOR SEISMIC RESTRAINTS OF MECHANICAL SYSTEMS AND PLUMBING SYSTEM" PUBLISHED BY SMACNA AND APPROVED BY DSA/ORS.

A COPY OF THE GUIDELINES PUBLISHED BY SMACNA AND APPROVED BY DSA SHALL BE PROVIDED BY THE CONTRACTOR AND KEPT ON THE JOB AT ALL TIMES.

TRANSFORMER ANCHORAGE DETAIL — A19

NONE

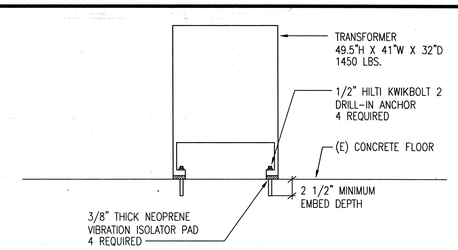

PLAN NOTES

KEY PLAN

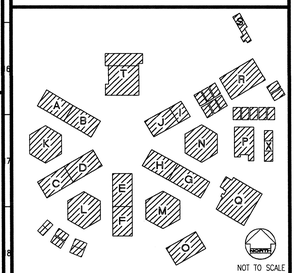
T
A
B
J
V

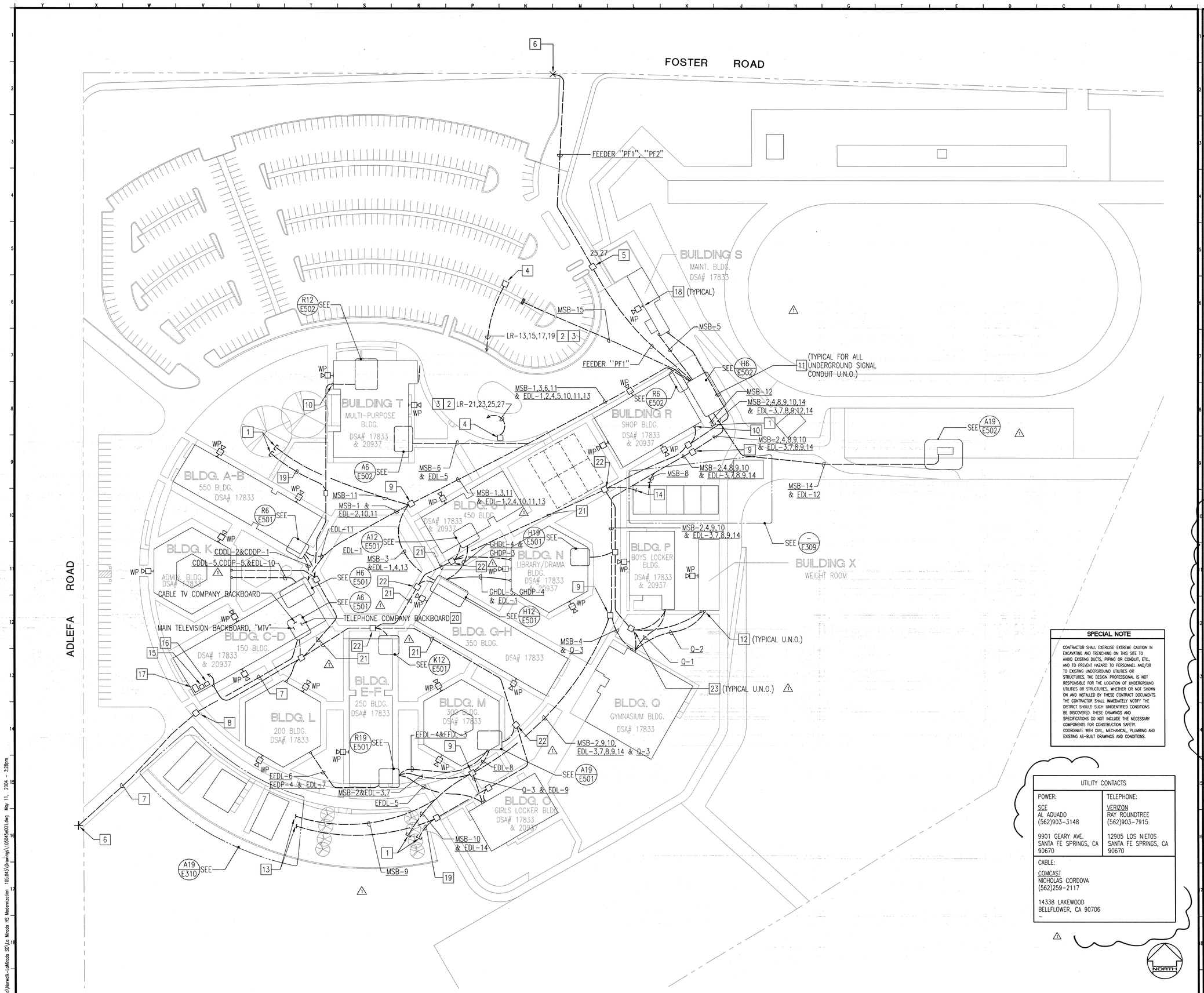

KEYNOTES

1. STUB AND CAP CONDUITS BELOW GRADE. PROVIDE FLUSH IN-GRADE MARKER.
2. 4#8, 1#8(GND)-1"C.
3. BACKFEED EXISTING PARKING LOT FIXTURES. △1
4. PROVIDE 2'x3'x3'D. CONCRETE PULLBOX WITH COVER ENGRAVED "SITE LIGHTING". VERIFY EXACT LOCATION IN FIELD PRIOR TO ROUGH-IN.
5. PROVIDE 2'x3'x3'-6"D. CONCRETE PULLBOX WITH BOLT-DOWN TRAFFIC COVER ENGRAVED "POWER".
6. INTERCEPT UTILITY COMPANY CONDUITS AND EXTEND AS INDICATED. VERIFY EXACT LOCATION.
7. PROVIDE TWO (2)2"C.O. FOR CABLE TELEVISION COMPANY SERVICE CONDUCTORS AND (2)4"C.O. FOR TELEPHONE COMPANY SERVICE CONDUCTORS. △1
8. PROVIDE TWO 2'x3'x3'-6"D. CONCRETE PULLBOXES WITH BOLT-DOWN TRAFFIC COVERS ENGRAVED "CABLE", AND "TELEPHONE," RESPECTIVELY.
9. PROVIDE 3'x5'x3'-6"D. CONCRETE PULLBOX WITH BOLT-DOWN COVER ENGRAVED "POWER".
10. ROUTE CONDUIT EXPOSED ON BUILDING EXTERIOR AS REQUIRED TO PERFORM WORK INDICATED. △1
11. PROVIDE THE FOLLOWING SIGNAL CONDUITS WITH CONDUCTORS AS REQUIRED U.N.O.:
    - 4"C. (DATA)
    - 2"C. (FIRE ALARM)
    - 2"C. (CLOCK)
    - 4"C. (TELEVISION)
    - 2"C. (TELEPHONE & SECURITY)
    - 2"C. (ENERGY MANAGEMENT)
12. STUB CONDUITS ADJACENT TO BUILDING +18" ABOVE FINISHED GRADE.
13. FOR CONTINUATION, SEE SHEET E310.
14. FOR CONTINUATION, SEE SHEET E309.
15. NEW INTRUSION DETECTION CONTROL PANEL.
16. NEW CLOCK SYSTEM CONTROL PANEL.
17. EXISTING FIRE ALARM CONTROL PANEL TO REMAIN. MODIFY AS REQUIRED TO SERVE THE NEW CONSTRUCTION. PROVIDE ADDITIONAL EQUIPMENT AS NEEDED FOR A COMPLETE AND OPERABLE SYSTEM.
18. EXTERIOR FIRE ALARM AUDIBLE DEVICE, REFER TO FLOORPLANS FOR CONDUIT AND WIRING. △1
19. PROVIDE THE FOLLOWING EMPTY SIGNAL CONDUITS:
    - 4"C.O. (DATA)
    - 2"C.O. (FIRE ALARM)
    - 2"C.O. (CLOCK)
    - 4"C.O. (TELEVISION & SECURITY)
    - 2"C.O. (TELEPHONE)
    - 2"C.O. (ENERGY MANAGEMENT)
20. MODIFY EXISTING TELEPHONE HEADEND EQUIPMENT AS REQUIRED TO SERVE THE NEW CONSTRUCTION. PROVIDE LEVEL 5E, 25 PAIR, FROM EXISTING TELEPHONE BACKBOARD, TO EACH BUILDING. PROVIDE ALL ADDITIONAL HARDWARE, CABLING, CONDUIT, WIRING, AND CONNECTIONS REQUIRED FOR A COMPLETE AND OPERABLE SYSTEM.
21. PROVIDE THE FOLLOWING SIGNAL CONDUITS WITH CONDUCTORS AS REQUIRED U.N.O.:
    - (2) 4"C. (DATA)
    - 2"C. (FIRE ALARM)
    - 2"C. (CLOCK)
    - 4"C. (TELEVISION)
    - 4"C. (TELEPHONE & SECURITY)
    - 2"C. (ENERGY MANAGEMENT)
22. PROVIDE 3'x5'x4'D. CONCRETE PULLBOX WITH BOLT-DOWN TRAFFIC COVER ENGRAVED "SIGNAL".
23. PROVIDE 2'x3'x3'-6"D. CONCRETE PULLBOX WITH BOLT-DOWN TRAFFIC COVER ENGRAVED "SIGNAL".

EMS SITE CONDUIT, AND ASSOCIATED TERMINAL CABINETS SHALL BE PART OF THE BASE BID.

SPECIAL NOTE

CONTRACTOR SHALL EXERCISE EXTREME CAUTION IN EXCAVATING AND TRENCHING ON THIS SITE TO AVOID EXISTING DUCTS, PIPING OR CONDUIT, ETC., AND TO PREVENT HAZARD TO PERSONNEL AND/OR TO EXISTING UNDERGROUND UTILITIES OR STRUCTURES. THE DESIGN PROFESSIONAL IS NOT RESPONSIBLE FOR THE LOCATION OF UNDERGROUND UTILITIES OR STRUCTURES, WHETHER OR NOT SHOWN ON AND INSTALLED BY THESE CONTRACT DOCUMENTS. THE CONTRACTOR SHALL IMMEDIATELY NOTIFY THE DISTRICT SHOULD SUCH UNIDENTIFIED CONDITIONS BE DISCOVERED. THESE DRAWINGS AND SPECIFICATIONS DO NOT INCLUDE THE NECESSARY COMPONENTS FOR CONSTRUCTION SAFETY. COORDINATE WITH CIVIL, MECHANICAL, PLUMBING AND EXISTING AS-BUILT DRAWINGS AND CONDITIONS.

UTILITY CONTACTS

POWER:	TELEPHONE:
SCE AL AGUADO (562)903-3148 9901 GEARY AVE. SANTA FE SPRINGS, CA 90670	VERIZON RAY ROUNDTREE (562)903-7915 12905 LOS NIETOS SANTA FE SPRINGS, CA 90670

CABLE:

COMCAST
NICHOLAS CORDOVA
(562)259-2117

14338 LAKEWOOD
BELLFLOWER, CA 90706
-

△1

KEY PLAN

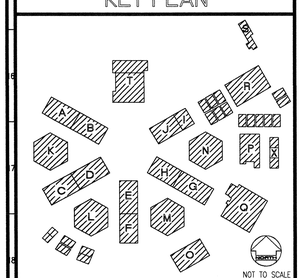

REVISED
MAY 12 2004

IDENTIFICATION STAMP
DIV. OF THE STATE ARCHITECT
OFFICE OF REGULATION SERVICES
FILE NO. 19-H51
APPL. NO. 03-106434
AC ____ FLS. NL SS ____
DATE ____

Dougherty + Dougherty
Architecture • Planning • Interior Design
319-D Airport Loop Drive
Costa Mesa, CA 92626
(714) 427-0877

Copyright © 2002 Dougherty + Dougherty

GLP Engineering, Inc.
Mechanical and Electrical Engineers
3185-C Airway Avenue
Costa Mesa, CA 92626-4601
Telephone (714) 751-1851
Fax (714) 751-4216

Architect Seal

Consultant Seal

LA MIRADA HIGH SCHOOL MODERNIZATION
NORWALK - LA MIRADA UNIFIED SCHOOL DISTRICT
13520 ADELFA DRIVE LA MIRADA, CA 90638

ELECTRICAL SITE PLAN

Date:	05-11-04
Job:	20237.50
Scale:	
Drawn:	
Revisions:	
△1	12-01-03

E001

ELECTRICAL SITE PLAN | A19 | 1"=60'

P:\Clients\D&D\Norwalk-LaMirada SD\La Mirada HS Modernization 105.045\Drawings\105045e001.dwg May 11, 2004 - 3:28pm

LIGHTING COMPLIANCE SUMMARY — LTG – 2

PROJECT NAME: LA MIRADA HIGH SCHOOL — DATE: 12/1/03

ACTUAL LIGHTING POWER

LUMINAIRE NAME	TYPE/ DESCRIPTION	NUMBER OF LUMINAIRES	WATTS PER LUMINAIRE (INCLUDING BALLAST)	CEC DEFAULT Y	CEC DEFAULT N*	TOTAL WATTS
1	FLUOR. IND/DIR	754	120	X		90480
1A	FLUOR. IND/DIR	4	60	X		240
2	FLUOR. 1'X4'	180	60	X		10800
3	FLUOR. 4' WRAPAROUND	44	60	X		2640
4	FLUOR. STRIP	32	60	X		1920
5	FLUOR. 2'X4'	89	91	X		8099
7	FLUOR. 4' FIXT	190	30	X		5700
8	FLUOR. DOWNLIGHT	23	30	X		690

SUBTOTAL FROM THIS PAGE: 120,569
PLUS SUBTOTAL FROM CONTINUATION PAGE: –
PORTABLE LIGHTING (FROM LTG–1, PART 3 OF 3): –
LESS CONTROL CREDIT WATTS (FROM LTG–3): –
*IF NOT USING THE CEC DEFAULT VALUE, PLEASE PROVIDE SUPPORTING DOCUMENTATION.
ADJUSTED ACTUAL WATTS: 120,569

ALLOWED LIGHTING POWER (CHOOSE ONE METHOD)

COMPLETE BUILDING METHOD

BUILDING CATEGORY (FROM 146(b) TABLE 1–H)	WATTS PER SF	COMPLETE BLDG. AREA	ALLOWED WATTS
SCHOOL	1.4	102,550	143,570

AREA CATEGORY METHOD

AREA CATEGORY (FROM 146(b) TABLE 1–H)	WATTS PER SF	AREA (SF)	ALLOWED WATTS
	TOTAL	AREA	WATTS

TAILORED METHOD

TOTAL ALLOWED WATTS (FROM LSF–6)

NONRESIDENTIAL COMPLIANCE FORM — JANUARY 2001

LIGHTING MANDATORY MEASURES — LTG–MM

PROJECT NAME: LA MIRADA HIGH SCHOOL — DATE: 12/1/03

[X] BUILDING LIGHTING SHUT-OFF — NOT APPLICABLE
THE BUILDING LIGHTING SHUT-OFF SYSTEM CONSISTS OF AN AUTOMATIC TIME SWITCH, WITH A ZONE FOR EACH FLOOR OR THE BUILDING IS SEPARATELY METERED AND LESS THAN 5,000 SQUARE FEET; EXEMPT FROM THE SHUT-OFF REQUIREMENT.

[X] OVERRIDE FOR BUILDING LIGHTING SHUT-OFF — NOT APPLICABLE
THE AUTOMATIC BUILDING SHUT-OFF SYSTEM IS PROVIDED WITH A MANUAL, ACCESSIBLE OVERRIDE SWITCH IN SIGHT OF THE LIGHTS. THE AREA OF OVERRIDE IS NOT TO EXCEED 5,000 SQUARE FEET.

[X] AUTOMATIC CONTROL DEVICES CERTIFIED — NOT APPLICABLE
ALL AUTOMATIC CONTROL DEVICES SPECIFIED ARE CERTIFIED; ALL ALTERNATE EQUIPMENT SHALL BE CERTIFIED AND INSTALLED AS DIRECTED BY THE MANUFACTURER.

[X] FLUORESCENT BALLAST AND LUMINARIES CERTIFIED — NOT APPLICABLE
ALL FLUORESCENT FIXTURES SPECIFIED FOR THE PROJECT ARE CERTIFIED AND LISTED IN THE DIRECTORY. ALL INSTALLED FIXTURES SHALL BE CERTIFIED.

[X] TANDEM WIRING FOR TWO–LAMP BALLASTS — NOT APPLICABLE
ALL ONE AND THREE LAMP FLUORESCENT FIXTURES ARE TANDEM WIRED WITH TWO (2) LAMP BALLAST WHERE REQUIRED BY STANDARDS 132; OR

ALL THREE LAMP FLUORESCENT FIXTURES ARE SPECIFIED WITH ELECTRONIC HIGH–FREQUENCY BALLASTS AND ARE EXEMPT FROM TWO–LAMP TANDEM WIRING REQUIREMENTS.

[X] INDIVIDUAL ROOM/AREA CONTROLS — NOT APPLICABLE
EACH ROOM AND AREA ON THIS BUILDING IS EQUIPPED WITH A SEPARATE SWITCH OR OCCUPANCY SENSOR DEVICE FOR EACH AREA WITH FLOOR–TO–CEILING WALLS.

[X] UNIFORM REDUCTION FOR INDIVIDUAL ROOMS — NOT APPLICABLE
ALL ROOMS GREATER THAN 100 SQUARE FEET AND MORE THAN 1.2 WATTS PER SQUARE FOOT LIGHTING LOAD SHALL BE CONTROLLED WITH BI–LEVEL SWITCHING FOR UNIFORM REDUCTION OF LIGHTING WITHIN THE ROOM.

[ ] DAYLIT AREA CONTROLS — (NOT APPLICABLE)
ALL ROOMS WITH WINDOWS AND SKYLIGHTS, THAT ARE GREATER THAN 250 SQUARE FEET, AND THAT ALLOW FOR THE EFFECTIVE USE OF DAYLIGHT IN THE AREAS SHALL HAVE 50% OF THE LAMPS IN EACH DAYLIT AREA CONTROLLED WITHIN THIS ROOM.

THE EFFECTIVE USE OF THROUGH DAYLIGHT CANNOT BY ACCOMPLISHED BECAUSE THE WINDOWS ARE CONTINUOUSLY SHADED BY A BUILDING ON THE ADJACENT LOT. DIAGRAM OF SHADING DURING DIFFERENT TIMES OF YEAR IS INCLUDED ON PLANS.

[ ] CONTROL OF EXTERIOR LIGHTS — (NOT APPLICABLE)
EXTERIOR MOUNTED FIXTURES WHICH ARE SERVED FROM THE ELECTRICAL PANEL INSIDE THE BUILDING ARE CONTROLLED WITH A DIRECTIONAL PHOTOCELL CONTROL ON THE ROOF AND A CORRESPONDING RELAY IN THE ELECTRICAL PANEL.

CERTIFICATE OF COMPLIANCE – LIGHTING — PART 1 OF 3 — LTG – 1

PROJECT NAME: LA MIRADA HIGH SCHOOL — DATE: 12/1/03
PROJECT ADDRESS: 13352 ADELFA AVENUE, LA MIRADA, CA 90638
PRINCIPAL DESIGNER – LIGHTING: GARY L. PETRAK, P.E. — TELEPHONE: (714) 751–1851 — BUILDING PERMIT#
DOCUMENTATION AUTHOR: GARY L. PETRAK, P.E. — TELEPHONE: (714) 751–1851 — CHECKED BY/DATE ENFORCEMENT AGENCY USE

GENERAL INFORMATION

DATE OF PLANS: 12/1/03	BUILDING CONDITIONED FLOOR AREA	CLIMATE ZONE	
BUILDING TYPE	[X] NONRESIDENTIAL	[ ] HIGH RISE RESIDENTIAL	[ ] HOTEL/MOTEL GUEST ROOM
PHASE OF CONSTRUCTION	[ ] NEW CONSTRUCTION	[ ] ADDITION	[X] ALTERATION [ ] UNCONDITIONED (FILE AFFIDAVIT)
METHOD OF LIGHTING COMPLIANCE	[X] COMPLETE BUILDING	[ ] AREA CATEGORY	[ ] TAILORED [ ] PERFORMANCE

STATEMENT OF COMPLIANCE

THE CERTIFICATE OF COMPLIANCE LISTS THE BUILDING FEATURES AND PERFORMANCE SPECIFICATIONS NEEDED TO COMPLY WITH THE CODE OF REGULATIONS, TITLE 24, PARTS 6 OF THE CALIFORNIA CODE OF REGULATIONS. THIS CERTIFICATE APPLIES ONLY TO BUILDING LIGHTING REQUIREMENTS.

THE DOCUMENTATION PREPARER HEREBY CERTIFIES THAT THE DOCUMENTATION IS ACCURATE AND COMPLETE.

DOCUMENTATION AUTHOR: GARY L. PETRAK, P.E. — SIGNATURE — DATE: 12/1/03

THE PRINCIPAL LIGHTING DESIGNER HEREBY CERTIFIES THAT THE PROPOSED BUILDING DESIGN REPRESENTED IN THIS SET OF CONSTRUCTION DOCUMENTS IS CONSISTENT WITH THE OTHER COMPLIANCE FORMS AND WORKSHEETS, WITH THE SPECIFICATIONS, AND WITH ANY OTHER CALCULATIONS SUBMITTED WITH THIS PERMIT APPLICATION. THE PROPOSED BUILDING HAS BEEN DESIGNED TO MEET THE ENVELOPE REQUIREMENTS CONTAINED IN SECTIONS 110,119,130 THROUGH 132, AND 146 AND 149 OF TITLE 24, PART 6.

PLEASE CHECK ONE:

[X] I HEREBY AFFIRM THAT I AM ELIGIBLE UNDER THE PROVISIONS OF DIVISIONS 3 OF THE BUSINESS AND PROFESSIONS CODE TO SIGN THIS DOCUMENT AS THE PERSON RESPONSIBLE FOR ITS PREPARATION, AND THAT I AM LICENSED UNDER THE STATE OF CALIFORNIA AS A CIVIL ENGINEER, ELECTRICAL ENGINEER OR ARCHITECT.

[ ] I AFFIRM THAT I AM ELIGIBLE UNDER THE PROVISIONS OF DIVISION 3 OF THE BUSINESS AND PROFESSIONS CODE AND SECTION 5537.2, 6737.1 TO SIGN THIS DOCUMENT AS THE PERSON RESPONSIBLE FOR ITS PREPARATION; AND THAT I AM A LICENSED CONTRACTOR PERFORMING THIS WORK.

[ ] I AFFIRM THAT I AM ELIGIBLE UNDER DIVISION 3 OF THE BUSINESS AND PROFESSIONS CODE TO SIGN THIS DOCUMENT BECAUSE IT PERTAINS TO A STRUCTURE OR TYPE OF WORK DESCRIBED AS EXEMPT PURSUANT TO BUSINESS AND PROFESSIONS CODE SECTIONS 5537,5538 AND 6737.1.

(THESE SECTIONS OF THE BUSINESS AND PROFESSIONS CODE ARE PRINTED IN FULL IN THE NONRESIDENTIAL MANUAL)

PRINCIPAL LIGHTING DESIGNER – NAME: GARY L. PETRAK, P.E. — SIGNATURE — DATE: 12/1/03 — LIC. NO.: E–17252

LIGHTING MANDATORY MEASURES

INDICATE LOCATION ON PLANS OF NOTE BLOCK MANDATORY MEASURES: THIS SHEET

INSTRUCTIONS TO APPLICANT

FOR DETAILED INSTRUCTIONS ON THE USE OF THIS AND ALL ENERGY STANDARDS COMPLIANCE FORMS, PLEASE REFER TO THE NONRESIDENTIAL MANUAL PUBLISHED BY THE CALIFORNIA ENERGY COMMISSION.
LTG–1: REQUIRED ON PLANS FOR ALL SUBMITTALS. PART 2AND 3 MAY BE INCORPORATED IN SCHEDULES ON PLANS.
LTG–2: REQUIRED FOR ALL SUBMITTALS.
LTG–3: OPTIONAL. USE ONLY IF LIGHTING CONTROL CREDITS ARE TAKEN.
LTG–4: OPTIONAL. PARTS 2 AND 3 AND LTG–5 ARE OPTIONAL IF TAILORED METHOD IS USED.

NONRESIDENTIAL COMPLIANCE FORM — JANUARY 2001

CERTIFICATE OF COMPLIANCE – LIGHTING — PART 2 OF 3 — LTG – 1

PROJECT NAME: LA MIRADA HIGH SCHOOL — DATE: 12/1/03

INSTALLED LIGHTING SCHEDULE

CODE	LUMINAIRE DESCRIPTION	LAMPS: TYPE DESCRIPTION	LAMPS: NO. OF LAMPS	LAMPS: WATTS PER LAMP	BALLASTS: TYPE DESCRIPTION	BALLASTS: NO. OF BALLAST	LUMINAIRE (LAMP + BALLAST): W/ OF BALLASTS	LUMINAIRE (LAMP + BALLAST): WATTS/ LUMINAIRE	TOTAL WATTS
1	FLUOR. IND/DIR	FLUOR	2/4'	31	E	2	754	120	90480
1A	4' FLUOR. IND/DIR	FLUOR	2/4'	31	E	1	4	60	240
2	FLUOR. 1'X4'	FLUOR	2	31	E	1	180	60	10800
3	FLUOR. 4' WRAPAROUND	FLUOR	2	31	E	1	44	60	2640
4	FLUOR. STRIP	FLUOR	2	31	E	1	32	60	1920
5	FLUOR. 2'X4'	FLUOR	3	31	E	2	89	91	8099
7	4' FLUOR FIXT	FLUOR	1	31	E	1	190	30	5700
8	FLUOR. DOWNLIGHT	FLUOR	1	26	E	1	23	30	690

LIGHTING SCHEDULE ON PLANS SHOWS EXTERIOR LIGHTING MEETS
[ ] EFFICACY AND CONTROL REQUIREMENTS OF 130(c)
[ ] CONTROL REQUIREMENTS OF 131(f)

SUBTOTAL FROM THIS PAGE: 120,569
PLUS SUBTOTAL FROM CONTINUATION PAGE: –
PORTABLE LIGHTING (FROM LTG–1, PART 3 OF 3): –
LESS CONTROL CREDIT WATTS (FROM LTG–3): –
ACTUAL ADJUSTED WATTS: 120,569

MANDATORY AUTOMATIC CONTROLS

CONTROL LOCATION (ROOM #)	CONTROL IDENTIFICATION	CONTROL TYPE (AUTO TIME SWITCH,OVERRIDE,ETC.)	SPACE CONTROLLED	NOTE TO FIELD

CONTROLS FOR CREDIT

CONTROL LOCATION (ROOM OR DWG. #)	CONTROL IDENTIFICATION	CONTROL TYPE (OCCUPANT,DAYLIGHT,DIMMING,ETC.)	LUMINAIRES CONTROLLED: TYPE	LUMINAIRES CONTROLLED: # OF LUMIN.	NOTE TO FIELD

NOTES TO FIELD – FOR BUILDING DEPARTMENT USE ONLY

NONRESIDENTIAL COMPLIANCE FORM — JANUARY 2001

FIXTURE SCHEDULE

TYPE	DESCRIPTION	TOTAL WATTS	LAMP QUAN	LAMP WATTS	LAMP TYPE	MOUNTING
1	FLUORESCENT, CABLE HUNG, INDIRECT/ DIRECT LUMINAIRE WITH TWO LAMP ROWS, WHITE CROSS BLADES, OPEN TOP, ROUNDED ENDCAPS AND IN LENGTH ROWS INDICATED. FINELITE S10–WCB–OPEN–2T8–9IW–AC	60 PER 4'	2 PER 4'	32	T8 3500K	CABLE HUNG
1E	SAME AS TYPE "1" EXCEPT WITH 90 MINUTE, 1100 LUMEN OUTPUT EMERGENCY BATTERY PACK.	60 PER 4'	2 PER 4'	32	T8 3500K	CABLE HUNG
2	4' FLUORESCENT LOW PROFILE FIXTURE WITH HEAVY GAGE STEEL HOUSING; BAKED WHITE ENAMEL FINISH; AND CLEAR EXTRUDED ACRYLIC REFRACTOR. METALUX #W SERIES OR EQUIVALENT.	60	2	32	T8 3500K	SURFACE
3	4' FLUORESCENT VANDAL RESISTANT FIXTURE WITH DIE–FORMED 16 GAUGE STEEL HOUSING, WELDED END CAPS; WHITE HIGH REFLECTANCE POWER COAT FINISH; GASKETED 0.156" CLEAR, IMPACT RESISTANT PRISMATIC POLYCARBONATE LENS; STAINLESS STEEL TORXHEAD SCREWS; AND U.L. LISTED FOR WET LOCATIONS. FAIL–SAFE #FWS SERIES OR EQUIVALENT.	60	2	32	T8 3500K	SURFACE
3E	SAME AS TYPE "3" EXCEPT WITH 90 MINUTE, 1100 LUMEN OUTPUT EMERGENCY BATTERY PACK.	60	2	32	T8 3500K	SURFACE
4	HEAVY DUTY 4' FLUORESCENT STRIP FIXTURE WITH DIE–FORMED STEEL HOUSING, BAKED WHITE ENAMEL FINISH AND 14 GAUGE WIRE GUARD. METALUX #STN SERIES OR EQUIVALENT. TYPE 4A: SAME AS TYPE 4 EXCEPT 8' FIXTURE AND LAMP QUANTITY.	60 120	2 4	32 32	T8 3500K	SURFACE
5	2'x4' FLUORESCENT FIXTURE WITH DIE–FORMED, NOMINAL 4 1/2" DEEP STEEL HOUSING PAINTED AFTER FABRICATION; FLUSH GASKETED WHITE STEEL DOOR FRAME WITH MITERED CORNERS; T–HINGES AND CAM LATCH; 3" DEEP 18 CELL PARABOLIC LOUVER AND TRIM TYPE AS REQUIRED FOR CEILING CONDITIONS. METALUX 2EP3 SERIES OR EQUIVALENT.	91	3	32	T8 3500K	RECESSED
5A	SAME AS TYPE "5" EXCEPT SURFACE MOUNTED. METALUX PMX SERIES OR EQUIVALENT.	91	3	32	T8 3500K	RECESSED
6	FLUORESCENT HIGH ABUSE ROUND LUMINAIRE, LISTED FOR WET LOCATIONS. KENALL MR13FD SERIES OR EQUAL	60	2	26	COMP FL TRIPLE TUBE	SURFACE
7	COMPACT FLUORESCENT DOWNLIGHT, NOMINAL 6" DIAMETER APERTURE; VERTICAL LAMP, ONE PIECE SPUN LOW IRIDESCENT PARABOLIC ALZAK REFLECTOR WITH 55° CUTOFF; AND U.L. LISTED FOR FEED THROUGH WIRING. PORTFOLIO #C6026 OR EQUIVALENT.	30	1	26	COMP FL TRIPLE TUBE	RECESSED
8	LED EXIT SIGN WITH DIE–CAST ALUMINUM HOUSING; BLACK HOUSING, HINGED AND LATCHED BRUSHED ALUMINUM STENCIL FACE PLATE(S); 6" LETTERS WITH 3/4" STROKE; RED DIFFUSE LENS; SINGLE OR DOUBLE FACE PANELS AND DIRECTIONAL ARROW(S) AS REQUIRED PER FIELD CONDITION; UNIVERSAL MOUNTING; WITH 90 MINUTE SELF–CONTAINED BATTERY PACK SURE–LITE #CX SERIES OR EQUIVALENT.	14	–	–	LED	SURFACE
9	INCANDESCENT HORIZONTALLY/VERTICALLY MOUNT VANITY LUMINAIRE. PROVIDE LENGTH AS INDICATED ON DRAWINGS. MOUNTING ORIENTATION AND FINISH AS DIRECTED BY ARCHITECT. LIGHTOLIER CELEBRITY 6 SERIES	480	8 LAMPS	60	INCAND	SURFACE/ WALL
10	INCANDESCENT LAMP HOLDER WITH WIRE GUARD, 120V. HUBBEL #457	60	1	60	INCAND	SURFACE/ WALL
11	FLUORESCENT DOWNLIGHT WITH CLEAR REFLECTOR. HALO PORTFOLIO C6032 SERIES OR EQUAL	30	1	26	COMP FL TRIPLE TUBE	RECESSED
12	HIGH PRESSURE SODIUM WALL BRACKET LUMINAIRE WITH DIE–CAST ALUMINUM BASEPLATE, POLYCARBONATE LENS, ELECTRONIC BALLAST, FINISH AS SELECTED BY ARCHITECT. KENALL MR17CL–P–XX–70S–1–120	90	1	70	H.P.S.	WALL

PLAN NOTES

KEY PLAN

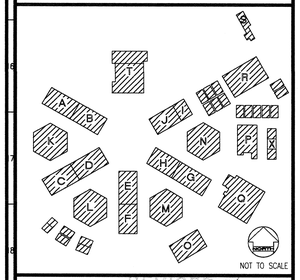

NOT TO SCALE

REVISED — MAY 12 2004

IDENTIFICATION STAMP
DIV. OF THE STATE ARCHITECT
OFFICE OF REGULATION SERVICES
FILE NO. 19–H51
APPL. NO. 03–106434
AC.____ FLS. ____ SS.____
DATE ____

Dougherty ■ Dougherty
Architecture • Planning • Interior Design
3194–D Airport Loop Drive
Costa Mesa, CA 92626
(714) 427–0277

Copyright © 2002 Dougherty + Dougherty

GLP Engineering, Inc.
Mechanical • Electrical
3185–G Airway Avenue
Costa Mesa, CA 92626–4601
Telephone (714) 751–1851
Fax (714) 751–4216

Architect Seal

Consultant Seal

LA MIRADA HIGH SCHOOL
MODERNIZATION
NORWALK – LA MIRADA UNIFIED SCHOOL DISTRICT
13320 ADELFA DRIVE LA MIRADA, CA 90638

COMPLIANCE FORMS AND FIXTURE SCHEDULE

Date:	05–11–04
Job:	20237.50
Scale:	NONE
Drawn:	GLPK
Revisions:	
1	12–01–03

E002

P:\Clients\DBA\Norwalk-LaMirada SD\La Mirada HS Modernization 105-045\Drawings\105045e002.dwg May 11, 2004 - 3:28pm

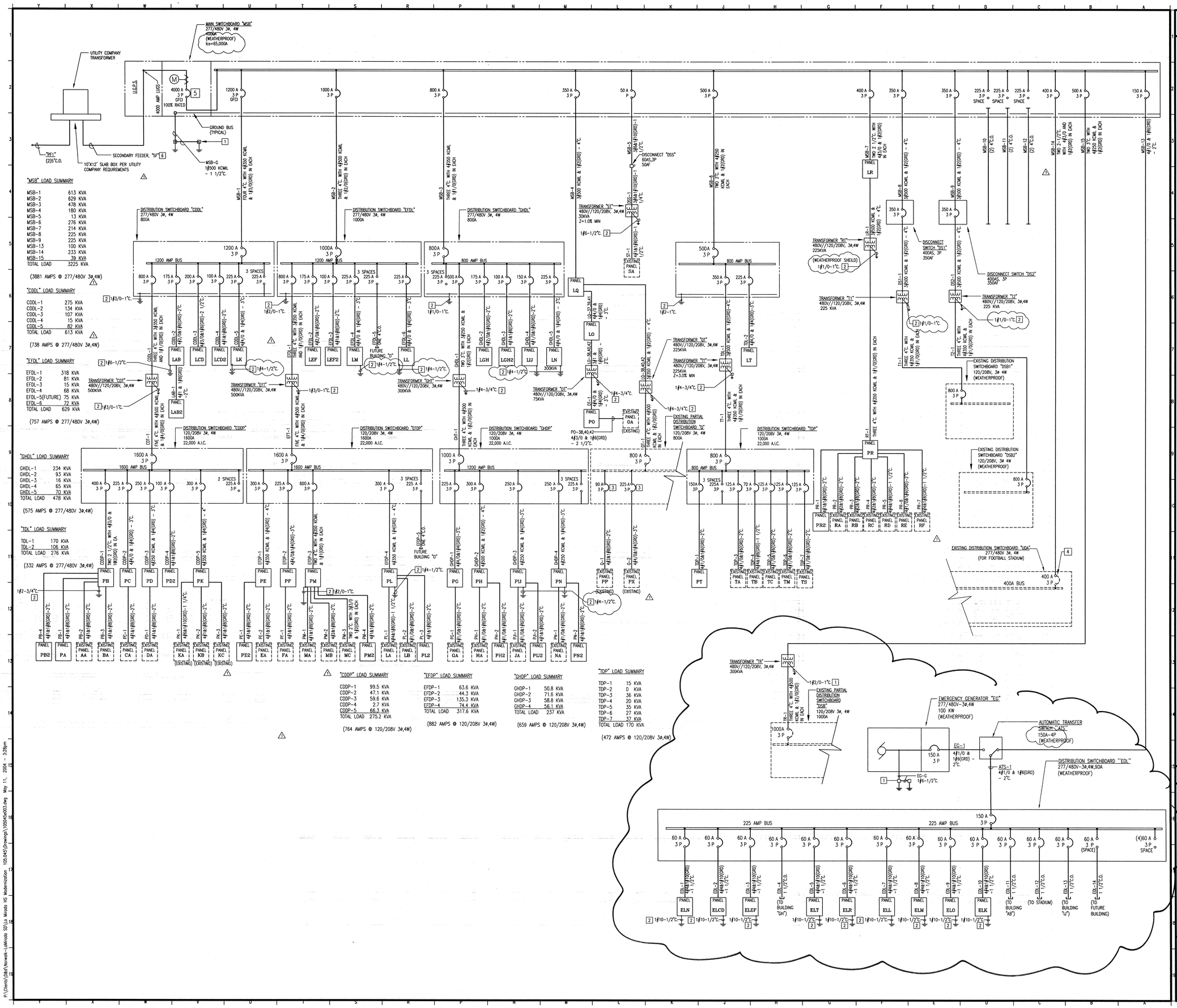

PLAN NOTES

1. 12"X12"X12" BOTTOMLESS CONCRETE PULLBOX WITH PEA-GRAVEL BASE AND 10FT LONG BY 3/4" DIAMETER COPPER GROUND ROD. MOUNT PULL BOX FLUSH IN-GRADE AND ENGRAVE "GROUND." QUANTITY AS REQUIRED TO ACHIEVE 25 OHMS TO GROUND OR LESS. PULL BOXES SHALL BE AT LEAST 6' APART.
2. CONNECT TO BUILDING METALLIC COLD WATER PIPE, BUILDING STRUCTURAL STEEL, AND BUILDING UFER GROUND. CONDUCTOR SIZE AS INDICATED.
3. PROVIDE CONNECTION TO EXISTING CIRCUIT BREAKER IN EXISTING PANEL. PROVIDE ALL CONDUIT, WIRING AND CONNECTIONS AS REQUIRED FOR A COMPLETE AND OPERABLE SYSTEM.
4. PROVIDE ADDITIONAL LUGS AS REQUIRED TO LAND IN NEW FEEDER.
5. PROVIDE TRANSIENT VOLTAGE SURGE SUPPRESSION (TVSS) SYSTEM AT MAIN BREAKER.
6. PROVIDE CABLE TRENCH PER UTILITY COMPANY REQUIRMENTS.

KEY PLAN

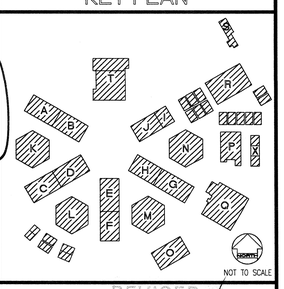

REVISED
MAY 1 2 2004

IDENTIFICATION STAMP
DIV. OF THE STATE ARCHITECT
OFFICE OF REGULATION SERVICES
FILE NO. 19-H51
APPL. NO. 03-106434
AC____ FLS____ SS____
DATE

Dougherty + Dougherty
Architecture • Planning • Interior Design
3145 B Airport Loop Drive
Costa Mesa, CA 92626
(714) 427-0277

Copyright © 2002 Dougherty + Dougherty

GLP Engineering, Inc.
Mechanical and Electrical Engineers
3185-C Airway Avenue
Costa Mesa, CA 92626-4601
Telephone (714) 751-1851
Fax (714) 751-4216

GREGORY L. PAUL
No. C-8634
EXP. JULY 1, 2004
STATE OF CALIFORNIA
Architect Seal

REGISTERED PROFESSIONAL ENGINEER
BRIAN E. WEISS
No. E 17252
EXP. 6-30-04
STATE OF CALIFORNIA
Consultant Seal

LA MIRADA HIGH SCHOOL
MODERNIZATION
NORWALK - LA MIRADA UNIFIED SCHOOL DISTRICT
13520 ADELFA DRIVE LA MIRADA, CA 90638

SINGLE LINE DIAGRAM

Date:	05-11-04
Job:	20237.50
Scale:	NONE
Drawn:	GLPK
Revisions:	
1	12-01-03

E003

P:\Clients\District\Norwalk-LaMirada SD\La Mirada HS Modernization 105.045\Drawings\105045e003.dwg May 11, 2004 - 3:28pm

PANEL: LAB
LOCATION: BUILDING "AB"
MOUNTING: SURFACE
PANELVOLTAGE: 277/480 3P, 4W
BUS: 225A
MAIN: 175A, 3P
AIC RATING: 65,000 A.I.C. RATED
CIRCUIT CODE: N : NON-CONTINUOUS
L : LONG-CONTINUOUS

S	VA LOAD A	VA LOAD B	VA LOAD C	LOAD DESCRIPTION	S	TYPE CKT. W	R	L	TR	P	A B C	C.B. TR	P	L	R	W	BUS	TYPE CKT. W	R	L	TR	P	A B C	C.B. TR	P	L	R	W	S	LOAD DESCRIPTION	VA LOAD A	B	C	S
1	3075			CU-4B1 (11.1 MCA)	L	L	---		15	3	X	---				N	L	---	---		---		X	---				N	---	CU-4B6 (11.1 MCA)	3075			2
3		3075		---	L	---	---		---			---				N	---	---	---		---			---				N	---	---		3075		4
5			3075	---	L	---	---		---			---				N	---	---	---		---			---				N	---	---			3075	6
7	3075			CU-4B2 (11.1 MCA)	N	L	---		15	3	X	---				N	L	---	---		---			---				N	---	CU-4B7 (11.1 MCA)	3075			8
9		3075		---	N	---	---		---			---				N	---	---	---		---		X	---				N	---	---		3075		10
11			3075	---	N	---	---		---			---				N	---	---	---		---			---				N	---	---			3075	12
13	3000			CU-4B3 (10.8 MCA)	N	L	---		15	3	X	---				N	L	---	---		---			---				N	---	CU-4B8 (11.1 MCA)	3075			14
15		3000		---	N	---	---		---			---				N	---	---	---		---		X	---				N	---	---		3075		16
17			3000	---	N	---	---		---			---				N	---	---	---		---			---				N	---	---			3075	18
19	3075			CU-4B4 (11.1 MCA)	N	L	---		15	3	X	---				N	L	---	---		---			---				N	---	CU-4B9 (11.1 MCA)	3075			20
21		3075		---	N	---	---		---			---				N	---	---	---		---		X	---				N	---	---		3075		22
23			3075	---	N	---	---		---			---				N	---	---	---		---			---				N	---	---			3075	24
25	3000			CU-4B5 (10.8 MCA)	N	L	---		15	3	X	---				N	L	---	---		---			---				N	---	CU-4B10 (10.8 MCA)	3000			26
27		3000		---	N	---	---		---			---				N	---	---	---		---		X	---				N	---	---		3000		28
29			3000	---	N	---	---		---			---				N	---	---	---		---			---				N	---	---			3000	30
31	4500			WH-1	N	L	---		30	3	X	SPACE						SPACE						SPACE						SPACE				32
33		4500		WH-1	N	---	---		30	3	X	SPACE						SPACE						SPACE						SPACE				34
35			4500	WH-1	N	---	---		---			SPACE						SPACE						SPACE						SPACE				36
37				SPARE								SPACE						SPACE						SUBFED "LAB2"						7332			3072	38
39				SPARE								SPACE						SPACE						---						---				40
41				SPARE								SPACE						SPACE						---						---			3232	42
	13295	19725	19725	PHASE TOTALS																										PHASE TOTALS	23602	20372	18632	

Total Phase A: 37927
Total Phase B: 40097
Total Phase C: 38357

PHASE TOTALS: CONNECTED VA (CODE A): 100956; CONNECTED VA (CODE L): 6025; CONNECTED VA (CODE R): ; CONNECTED VA (CODE X): ; TOTAL CONNECTED KVA: 116.2; DEMAND KVA: ; TOTAL ADJUSTED KVA: 116.2; TOTAL PANEL AMPS: 146.5; AMPS W/CLC: 142.8

11/24/03 2:56 PM

PANEL: LAB2
LOCATION: BUILDING "AB"
MOUNTING: SURFACE
PANELVOLTAGE: 277/480 3P, 4W
BUS: 100A
MAIN: L.O.
AIC RATING: 65,000 A.I.C. RATED
CIRCUIT CODE: N : NON-CONTINUOUS
L : LONG-CONTINUOUS

S	VA LOAD A	VA LOAD B	VA LOAD C	LOAD DESCRIPTION	S	TYPE CKT. W	R	L	TR	P	A B C	C.B. TR	P	L	R	W	BUS	TYPE CKT. W	R	L	TR	P	A B C	C.B. TR	P	L	R	W	S	LOAD DESCRIPTION	VA LOAD A	B	C	S
1	1208			CLASSROOM LTG	L	L	13	20	1	X		20	1	13			L	CLASSROOM LTG	1208										L	CLASSROOM LTG	1208			2
3		1208		CLASSROOM LTG	L	L	13	20	1	X		20	1	13			L	CLASSROOM LTG		1208									L	CLASSROOM LTG		1208		4
5			1208	CLASSROOM LTG	L	L	13	20	1	X		20	1	13			L	CLASSROOM LTG			1208								L	CLASSROOM LTG			1208	6
7	1208			CLASSROOM LTG	L	L	13	20	1	X		20	1	13			L	CLASSROOM LTG	1208										L	CLASSROOM LTG	1208			8
9		1208		CLASSROOM LTG	L	L	13	20	1	X		20	1	13			L	CLASSROOM LTG		1208									L	CLASSROOM LTG		1208		10
11			1200	STORAGE, MECH RM LTG	L	L	18	20	1	X		20	1	18			L	WORKROOM LTG			576								L	WORKROOM LTG			576	12
13		240		R1 - EXTERIOR LTG	L	L	8	20	1	X		20	1					SPARE						SPARE						SPARE				14
15			240	R2 - EXTERIOR LTG	L	L	8	20	1	X		20	1					SPARE						SPARE						SPARE				16
17				SPARE								20	1					SPARE						SPARE						SPARE				18
19				SPARE								20	1					SPARE						SPARE						SPARE				20
21				SPARE								20	1					SPARE						SPACE						SPACE				22
23				SPARE								20	1					SPARE						SPACE						SPACE				24
25	3000			CU-M1 (10.0 MCA)	L	L	15	3	1	X		15	3				1	L	CU-M6 (10.0 MCA)	3000										SPACE	3000			26
27		3000		---	N	---	---		---			---				N	---	---	---		---			---				N	---	---		3000		28
29			3000	---	N	---	---		---			---				N	---	---	---		---			---				N	---	---			3000	30
31	3000			CU-M2 (10.0 MCA)	N	L	---		15	3	X	---				N	L	---	---		---			---				N	---	CU-M7 (10.0 MCA)	3000			32
33		3000		---	N	---	---		---			---				N	---	---	---		---		X	---				N	---	---		3000		34
35			3000	---	N	---	---		---			---				N	---	---	---		---			---				N	---	---			3000	36
37	3000			CU-M3 (10.0 MCA)	N	L	---		15	3	X	---				N	L	---	---		---			---				N	---	CU-M8 (10.0 MCA)	3000			38
39		3000		---	N	---	---		---			---				N	---	---	---		---		X	---				N	---	---		3000		40
41			3000	---	N	---	---		---			---				N	---	---	---		---			---				N	---	---			3000	42
	3016	3648	1440	PHASE TOTALS																										PHASE TOTALS	2416	2416	1184	

Total Phase A: 6432
Total Phase B: 6272
Total Phase C: 3312

R1 - INDICATES CIRCUIT IS CONTROLLED BY SINGLE POLE RELAY, OPERATED BY ENERGY MANAGEMENT SYSTEM.
R2 - INDICATES CIRCUIT IS CONTROLLED BY SINGLE POLE RELAY, OPERATED BY ENERGY MANAGEMENT SYSTEM.

PHASE TOTALS: CONNECTED VA (CODE A): 14836; CONNECTED VA (CODE L): 14036; CONNECTED VA (CODE R): ; CONNECTED VA (CODE X): ; TOTAL CONNECTED KVA: 14.7; DEMAND KVA: ; TOTAL ADJUSTED KVA: 14.7; TOTAL PANEL AMPS: 23.9; AMPS W/CLC: 26.7

1/23/03 3:41 PM

PANEL: LCD
LOCATION: BUILDING "CD"
MOUNTING: SURFACE
PANELVOLTAGE: 277/480 3P, 4W
BUS: 225A
MAIN: L.O.
AIC RATING: 65,000 A.I.C. RATED
CIRCUIT CODE: N : NON-CONTINUOUS
L : LONG-CONTINUOUS

S	VA LOAD A	VA LOAD B	VA LOAD C	LOAD DESCRIPTION	S	TYPE CKT. W	R	L	TR	P	A B C	C.B. TR	P	L	R	W	BUS	TYPE CKT. W	R	L	TR	P	A B C	C.B. TR	P	L	R	W	S	LOAD DESCRIPTION	VA LOAD A	B	C	S
1	3075			CU-CD1 (11.1 MCA)	N	L	---		15	3	X	---				N	L	---	---		15	3	X	---				N	---	CU-CD6 (11.1 MCA)	3075			2
3		3075		---	N	---	---		---			---				N	---	---	---		---			---				N	---	---		3075		4
5			3075	---	N	---	---		---			---				N	---	---	---		---		X	---				N	---	---			3075	6
7	3075			CU-CD2 (11.1 MCA)	N	L	---		15	3	X	---				N	L	---	---		---			---				N	---	CU-CD7 (11.1 MCA)	3075			8
9		3075		---	N	---	---		---			---				N	---	---	---		---		X	---				N	---	---		3075		10
11			3075	---	N	---	---		---			---				N	---	---	---		---			---				N	---	---			3075	12
13	3000			CU-CD3 (10.8 MCA)	N	L	---		15	3	X	---				N	L	---	---		---			---				N	---	CU-CD8 (7.5 MCA)	2075			14
15		3000		---	N	---	---		---			---				N	---	---	---		---		X	---				N	---	---		2075		16
17			3000	---	N	---	---		---			---				N	---	---	---		---			---				N	---	---			2075	18
19	3075			CU-CD4 (11.1 MCA)	N	L	---		15	3	X	---				N	L	---	---		---			---				N	---	AC-CD1 (26.3 MCA)	7285			20
21		3075		---	N	---	---		---			---				N	---	---	---		---		X	---				N	---	---		7285		22
23			3075	---	N	---	---		---			---				N	---	---	---		---			---				N	---	---			7285	24
25	7285			AC-CD1 (26.3 MCA)	N	L	---		---	---		---				N	---	---	---		---	---		---				N	---	AC-CD6 (26.3 MCA)	7285			26
27		7285		---	N	---	---		---	---		---				N	---	---	---		---	---	X	---				N	---	---		7285		28
29			7285	---	N	---	---		---	---		---				N	---	---	---		---	---		---				N	---	---			7285	30
31	7285			AC-CD2 (26.3 MCA)	N	L	---		---	---		30	3	X			N	---	---		---	---		---				N	---	AC-CD7 (26.3 MCA)	7285			32
33		7285		---	N	---	---		---	---		---				N	---	---	---		---	---	X	---				N	---	---		7285		34
35			7285	---	N	---	---		---	---		---				N	---	---	---		---	---		---				N	---	---			7285	36
37	4500			WH-3	N	L	---		30	3	X	SPACE						SPACE						SPACE						SPACE				38
39		4500		---	N	---	---		---			SPACE						SPACE						SPACE						SPACE				40
41				SPARE								SPACE						SPACE						SPACE						SPACE				42
	21360	26795	26795	PHASE TOTALS																										PHASE TOTALS	22795	22795	22795	

Total Phase A: 54090
Total Phase B: 49590
Total Phase C: 49590

PHASE TOTALS: CONNECTED VA (CODE A): 134115; CONNECTED VA (CODE L): 21855; CONNECTED VA (CODE R): ; CONNECTED VA (CODE X): ; TOTAL CONNECTED KVA: 153.3; DEMAND KVA: ; TOTAL ADJUSTED KVA: 153.3; TOTAL PANEL AMPS: 184.7; AMPS W/CLC: 191.3

3/26/04 11:14 AM

PANEL: LQ
LOCATION: BUILDING "Q"
MOUNTING: SURFACE
PANELVOLTAGE: 277/480 3P, 4W
BUS: 400A
MAIN: 350A,DP C.B.
AIC RATING: 65,000 SERIES RATED
CIRCUIT CODE: N : NON-CONTINUOUS
L : LONG-CONTINUOUS

S	VA LOAD A	VA LOAD B	VA LOAD C	LOAD DESCRIPTION	S	TYPE CKT. W	R	L	TR	P	A B C	C.B. TR	P	L	R	W	BUS	TYPE CKT. W	R	L	TR	P	A B C	C.B. TR	P	L	R	W	S	LOAD DESCRIPTION	VA LOAD A	B	C	S
1				SPARE								20	1					SPARE												SPARE				2
3				SPARE								20	1					SPARE												SPARE				4
5				SPARE								20	1					SPARE												SPARE				6
7				SPACE														SPACE												SPACE				8
9				SPACE														SPACE												SPACE				10
11				SPACE														SPACE												SPACE				12
13				SPACE														SPACE												SPACE				14
15				SPACE														SPACE												SPACE				16
17				SPACE														SPACE												SPACE				18
19				SPACE														SPACE												SPACE				20
21				SPACE														SPACE												SPACE				22
23				SPACE														SPACE												SPACE				24
25				SPACE														SPACE												SPACE				26
27				SPACE														SPACE												SPACE				28
29				SPACE														SPACE												SPACE				30
31				SPACE														SPACE												SPACE				32
33				SPACE														SPACE												SPACE				34
35				SPACE														SPACE												SPACE				36
37				SPACE														SPACE												SPACE				38
39				SPACE														SPACE												SPACE				40
41				SPACE														SPACE												SPACE				42
	0	0	0	PHASE TOTALS																										PHASE TOTALS	0	0	0	

Total Phase A: 0
Total Phase B: 0
Total Phase C: 0

PHASE TOTALS: CONNECTED VA (CODE A): ; CONNECTED VA (CODE L): ; CONNECTED VA (CODE R): ; CONNECTED VA (CODE X): ; TOTAL CONNECTED KVA: ; DEMAND KVA: ; TOTAL ADJUSTED KVA: ; TOTAL PANEL AMPS: ; AMPS W/CLC: ;

3/26/04 1:27 PM

PANEL: LCD2
LOCATION: BUILDING "CD"
MOUNTING: SURFACE
PANELVOLTAGE: 277/480 3P, 4W
BUS: 100A
MAIN: L.O.
AIC RATING: 65,000 A.I.C. RATED
CIRCUIT CODE: N : NON-CONTINUOUS
L : LONG-CONTINUOUS

S	VA LOAD A	VA LOAD B	VA LOAD C	LOAD DESCRIPTION	S	TYPE CKT. W	R	L	TR	P	A B C	C.B. TR	P	L	R	W	BUS	TYPE CKT. W	R	L	TR	P	A B C	C.B. TR	P	L	R	W	S	LOAD DESCRIPTION	VA LOAD A	B	C	S
1	1208			CLASSROOM 174 LTG	L	L	13	20	1	X		20	1	13			L	CLASSROOM 175 LTG	1208										L	CLASSROOM 176 LTG	1208			2
3		1208		CLASSROOM 170, 178 LTG	L	L	12	20	1	X		20	1	13			L	CLASSROOM 177 LTG		1208									L	CLASSROOM 179 LTG		1208		4
5			1208	CLASSROOM 171 LTG	L	L	12	20	1	X		20	1	13			L	CLASSROOM 172 LTG			1208								L	CLASSROOM 173 LTG			1208	6
7	180			WORKROOM 180 LTG	L	L	8	20	1	X		20	1	10			L	CLASSROOM 182 LTG	1632										L	CLASSROOM 181 LTG				8
9		1632		CLASSROOM 182 LTG	L	L	13	20	1	X		20	1	13			L	CLASSROOM 183 LTG		1208									L	CLASSROOM 184 LTG		1208		10
11			1208	CLASSROOM 180 LTG	L	L	13	20	1	X		20	1	13			L	WORKROOM LTG			480								L	WORKROOM LTG			480	12
13	576			STORAGE, MECH RM LTG	L	L	19	20	1	X		20	1					SPARE						SPARE						SPARE				14
15		240		R1 - EXTERIOR LTG	L			20	1	X		20	1					SPARE						SPARE						SPARE				16
17			240	R2 - EXTERIOR LTG	L			20	1	X		20	1					SPARE						SPARE						SPARE				18
19				SPARE				20	1	X								SPARE						SPARE						SPARE				20
21				SPARE				20	1	X								SPARE						SPARE						SPARE				22
23				SPARE				20	1	X								SPARE						SPARE						SPARE				24
25				SPACE														SPACE												SPACE				26
27				SPACE														SPACE												SPACE				28
29				SPACE														SPACE												SPACE				30
31				SPACE														SPACE												SPACE				32
33				SPACE														SPACE												SPACE				34
35				SPACE														SPACE												SPACE				36
37				SPACE														SPACE												SPACE				38
39				SPACE														SPACE												SPACE				40
41				SPACE														SPACE												SPACE				42
	1984	3080	2016	PHASE TOTALS																										PHASE TOTALS	2944	2416	1616	

Total Phase A: 4824
Total Phase B: 5496
Total Phase C: 4632

R1 - INDICATES CIRCUIT IS CONTROLLED BY SINGLE POLE RELAY, OPERATED BY ENERGY MANAGEMENT SYSTEM.
R2 - INDICATES CIRCUIT IS CONTROLLED BY SINGLE POLE RELAY, OPERATED BY ENERGY MANAGEMENT SYSTEM.

PHASE TOTALS: CONNECTED VA (CODE A): 14772; CONNECTED VA (CODE L): ; CONNECTED VA (CODE R): ; CONNECTED VA (CODE X): ; TOTAL CONNECTED KVA: 14.8; DEMAND KVA: ; TOTAL ADJUSTED KVA: 14.8; TOTAL PANEL AMPS: 19.9; AMPS W/CLC: 24.9

3/4/04 11:51 AM

PANEL: LEF
LOCATION: BUILDING "EF"
MOUNTING: SURFACE
PANELVOLTAGE: 277/480 3P, 4W
BUS: 225A
MAIN: L.O.
AIC RATING: 65,000 A.I.C. RATED
CIRCUIT CODE: N : NON-CONTINUOUS
L : LONG-CONTINUOUS

S	VA LOAD A	VA LOAD B	VA LOAD C	LOAD DESCRIPTION	S	TYPE CKT. W	R	L	TR	P	A B C	C.B. TR	P	L	R	W	BUS	TYPE CKT. W	R	L	TR	P	A B C	C.B. TR	P	L	R	W	S	LOAD DESCRIPTION	VA LOAD A	B	C	S
1	3000			CU-E1 (10.0 MCA)	L	L	---		15	3	X	---				N	L	---	---		---			---				N	---	CU-E6 (10.0 MCA)	3000			2
3		3000		---	L	---	---		---			---				N	---	---	---		---		X	---				N	---	---		3000		4
5			3000	---	L	---	---		---			---				N	---	---	---		---			---				N	---	---			3000	6
7	3000			CU-E2 (10.0 MCA)	N	L	---		15	3	X	---				N	L	---	---		---			---				N	---	CU-E7 (10.0 MCA)	3000			8
9		3000		---	N	---	---		---			---				N	---	---	---		---		X	---				N	---	---		3000		10
11			3000	---	N	---	---		---			---				N	---	---	---		---			---				N	---	---			3000	12
13	3000			CU-E3 (10.0 MCA)	N	L	---		15	3	X	---				N	L	---	---		---			---				N	---	CU-E8 (10.0 MCA)	3000			14
15		3000		---	N	---	---		---			---				N	---	---	---		---		X	---				N	---	---		3000		16
17			3000	---	N	---	---		---			---				N	---	---	---		---			---				N	---	---			3000	18
19	3000			CU-E4 (10.0 MCA)	N	L	---		15	3	X	---				N	L	---	---		---			---				N	---	CU-E9 (10.0 MCA)	3000			20
21		3000		---	N	---	---		---			---				N	---	---	---		---		X	---				N	---	---		3000		22
23			3000	---	N	---	---		---			---				N	---	---	---		---			---				N	---	---			3000	24
25	3000			CU-E5 (10.0 MCA)	N	L	---		15	3	X	---				N	L	---	---		---			---				N	---	---				26
27		3000		---	N	---	---		---			---				N	---	---	---		---		X	---				N	---	---				28
29				SPARE								SPACE						SPACE						SPACE						SPACE				30
31				SPARE								SPACE						SPACE						SPACE						SPACE				32
33				SPARE								SPACE						SPACE						SPACE						SPACE				34
35				SPARE								SPACE						SPACE						SPACE						SPACE				36
37				SPARE								SPACE						SPACE						SPACE						SPACE				38
39				SPARE								SPACE						SPACE						SPACE						SPACE				40
41				SPARE								SPACE						SPACE						SPACE						SPACE				42
	15000	15000	15000	PHASE TOTALS																										PHASE TOTALS	12000	12000	12000	

Total Phase A: 27000
Total Phase B: 27000
Total Phase C: 27000

PROVIDE LOCK-ON DEVICE.

PHASE TOTALS: CONNECTED VA (CODE A): 72000; CONNECTED VA (CODE L): 9000; CONNECTED VA (CODE R): ; CONNECTED VA (CODE X): ; TOTAL CONNECTED KVA: 81.0; DEMAND KVA: ; TOTAL ADJUSTED KVA: 81.0; TOTAL PANEL AMPS: 97.6; AMPS W/CLC: 102.4

1/23/03 3:45 PM

PANEL: LEF2
LOCATION: BUILDING "EF"
MOUNTING: SURFACE
PANELVOLTAGE: 277/480 3P, 4W
BUS: 100A
MAIN: L.O.
AIC RATING: 65,000 A.I.C. RATED
CIRCUIT CODE: N : NON-CONTINUOUS
L : LONG-CONTINUOUS

S	VA LOAD A	VA LOAD B	VA LOAD C	LOAD DESCRIPTION	S	TYPE CKT. W	R	L	TR	P	A B C	C.B. TR	P	L	R	W	BUS	TYPE CKT. W	R	L	TR	P	A B C	C.B. TR	P	L	R	W	S	LOAD DESCRIPTION	VA LOAD A	B	C	S
1	2120			CLASSROOM LTG	L		20	20	1	X		20	1	13			L	CLASSROOM LTG	1208										L	CLASSROOM LTG	1208			2
3		1568		CLASSROOM LTG	L		16	20	1	X		20	1	13			L	CLASSROOM LTG		1208									L	CLASSROOM LTG		1208		4
5			1440	CLASSROOM LTG	L		14	20	1	X		20	1	13			L	CLASSROOM LTG			1208								L	CLASSROOM LTG			1208	6
7	1208			CLASSROOM LTG	L		13	20	1	X		20	1	13			L	CLASSROOM LTG	1208										L	CLASSROOM LTG	1208			8
9		1208		CLASSROOM LTG	L		13	20	1	X		20	1	13			L	CLASSROOM LTG		1208									L	CLASSROOM LTG		1208		10
11			432	STORAGE, MECH RM LTG	L		8	20	1	X		20	1	7			L	WORKROOM LTG			480								L	WORKROOM LTG			480	12
13	240			R1 - EXTERIOR LTG	L		8	20	1	X		20	1					SPARE						SPARE						SPARE				14
15		240		R2 - EXTERIOR LTG	L		8	20	1	X		20	1					SPARE						SPARE						SPARE				16
17				SPARE				20	1	X								SPARE						SPARE						SPARE				18
19				SPARE				20	1	X								SPARE						SPARE						SPARE				20
21				SPARE				20	1	X								SPARE						SPARE						SPARE				22
23				SPARE				20	1	X								SPARE						SPARE						SPARE				24
25				SPACE														SPACE												SPACE				26
27				SPACE														SPACE												SPACE				28
29				SPACE														SPACE												SPACE				30
31				SPACE														SPACE												SPACE				32
33				SPACE														SPACE												SPACE				34
35				SPACE														SPACE												SPACE				36
37				SPACE														SPACE												SPACE				38
39				SPAC

PANEL: PA | LOCATION: BUILDING "AB" | MOUNTING: SURFACE | PANEL VOLTAGE: 120/208 3P, 4W | BUS: 500A | MAIN: L.O. | AIC RATING: 22,000 A.I.C. RATED | CIRCUIT CODE: N: NON-CONTINUOUS, L: LONG-CONTINUOUS, R: DEMANDABLE RECEPTACLES, K: KITCHEN

S	VA LOAD A	VA LOAD B	VA LOAD C	S	LOAD DESCRIPTION	S	W	R	L	TYPE CKT. TR	P	A B C	C.B.	BUS	C.B.	TYPE CKT. TR	P	L	R	W	S	LOAD DESCRIPTION	VA LOAD A	VA LOAD B	VA LOAD C	S
1	540			1	MORNXSCH RECEPTS	E		2		20	1	X	20	1	2	E	MORNXSCH RECEPTS	540			2
3		360		3	MORNXSCH RECEPTS	E		2		20	1	X	20	1	2	E	MORNXSCH RECEPTS		360		4
5			360	5	CLASSOFFICE RECEPTS	E		2		20	1	X	20	1	2	E	MORNXSCH RECEPTS			360	6
7	360			7	CLASSROOM RECEPTS	E		2		20	1	X	20	1	2	E	CLASSROOM RECEPTS	360			8
9		540		9	CLASSROOM RECEPTS	E		2		20	1	X	20	1	2	E	CLASSROOM RECEPTS		540		10
11			360	11	CLASSROOM RECEPTS	E		2		20	1	X	20	1	2	E	CLASSROOM RECEPTS			360	12
13	360			13	CLASSROOM RECEPTS	E		2		20	1	X	20	1	2	E	CLASSROOM RECEPTS	360			14
15		360		15	CLASSROOM RECEPTS	E		2		20	1	X	20	1	2	E	CLASSROOM RECEPTS		360		16
17			360	17	CLASSROOM RECEPTS	E		2		20	1	X	20	1	2	E	CLASSROOM RECEPTS			360	18
19	360			19	CLASSROOM RECEPTS	E		2		20	1	X	20	1	2	E	CLASSROOM RECEPTS	360			20
21		360		21	CLASSROOM RECEPTS	E		2		20	1	X	20	1	2	E	CLASSROOM RECEPTS		360		22
23			360	23	CLASSROOM RECEPTS	E		2		20	1	X	20	1	2	E	CLASSROOM RECEPTS			360	24
25	540			25	CORRIDOR CARD RECEPTS	E		2		20	1	X	20	1	2	E	CORRIDOR CARD RECEPTS	540			26
27		360		27	CLASSROOM RECEPTS	E		2		20	1	X	20	1	2	E	CORRIDOR CARD RECEPTS		540		28
29			360	29	CLASSROOM RECEPTS	E		2		20	1	X	20	1	2	E	CORRIDOR CARD RECEPTS			360	30
31	360			31	MORNXSCH RECEPTS	E		2		20	1	X	20	1	2	E	CLASSROOM RECEPTS	1587			32
33		360		33	MORNXSCH RECEPTS	E		2		15	1		1	1	K	FAU-A8H		1587		34
35			360	35	MORNXSCH RECEPTS	E		2		15	1		1	1	K	FAU-A8H			1587	36
37	540			37	SPARE					20	1	X	20	1			SPARE				38
39		540		39	SPARE					20	1	X	20	1			SPARE				40
41			540	41	SPARE					20	1	X	15	1	1	K	FAU-A8H			1587	42
	2880	2340	3240		PHASE TOTALS												PHASE TOTALS	5334	5325	4874	
	Total Phase A:			8214														CONNECTED VA (CODE K0):			7626	
	Total Phase B:			7665														CONNECTED VA (CODE L1):			1587	
	Total Phase C:			7314														CONNECTED VA (CODE R):			13680	
																		CONNECTED VA (CODE X1):				
																		TOTAL CONNECTED KVA:			23.2	
																		DEMAND KVA:			-1.8	
																		TOTAL ADJUSTED KVA:			21.4	
																		TOTAL PANEL AMPS:			63.4	
																		AMPS W/LCL:			60.8	

1/23/03 4:31 PM

PANEL: PB | LOCATION: BUILDING "B" | MOUNTING: SURFACE | PANEL VOLTAGE: 120/208 3P, 4W | BUS: 400A | MAIN: L.O. | AIC RATING: 22,000 A.I.C. RATED | CIRCUIT CODE: N: NON-CONTINUOUS, L: LONG-CONTINUOUS, R: DEMANDABLE RECEPTACLES, K: KITCHEN

S	VA LOAD A	VA LOAD B	VA LOAD C	S	LOAD DESCRIPTION	S	W	R	L	TYPE CKT. TR	P	A B C	C.B.	BUS	C.B.	TYPE CKT. TR	P	L	R	W	S	LOAD DESCRIPTION	VA LOAD A	VA LOAD B	VA LOAD C	S
1	720			1	RETRXSCH RECEPTS	E		4		20	1	X	20	1	2	E	CLASSROOM RECEPTS	540			2
3		540		3	CLASSROOM RECEPTS	E		3		20	1	X	20	1	2	E	CLASSROOM RECEPTS		360		4
5			360	5	CLASSROOM RECEPTS	E		2		20	1	X	20	1	2	E	CLASSROOM RECEPTS			360	6
7	360			7	CLASSROOM RECEPTS	E		2		20	1	X	20	1	2	E	CLASSROOM RECEPTS	360			8
9		540		9	CLASSROOM RECEPTS	E		3		20	1	X	20	1	2	E	CLASSROOM RECEPTS		540		10
11			360	11	CLASSROOM RECEPTS	E		2		20	1	X	20	1	2	E	CLASSROOM RECEPTS			360	12
13	360			13	CLASSROOM RECEPTS	E		2		20	1	X	20	1	2	E	CLASSROOM RECEPTS	360			14
15		360		15	CLASSROOM RECEPTS	E		2		20	1	X	20	1	2	E	SIGNAL RECEPT		750		16
17			360	17	SNACK BAR RECEPTS	E		3		20	1	X	20	1	1	E	SIGNAL RECEPT	750			18
19	360			19	SNACK BAR RECEPTS	E		2		20	1	X	20	1	1	E	SIGNAL RECEPT		750		20
21		360		21	ART STUDIO	E		2		20	1	X	20	1	1	E	SOFT WELL RECEPT			180	22
23	1125			23	FAU-A67	N	1			15	1		1	1	N	SUBFEED "MDP"	5620				24
25		1125		25	FAU-A67	N	1			15	1		1	1	N	--		6080			26
27	1125			27	FAU-A66	N	1			15	1		1	1	N	--			5840		28
29		1125		29	FAU-A66	N	1			15	1		1	1	N	SUBFEED EXISTING "MA"	8750				30
31	847			31	SPARE					20	1	X	--	--			SPARE				32
33				33	SPARE					20	1	X	--	--			SPARE		8200		34
35	8800			35	SUBFEED EXISTING "DA"	N				100	3	X	100	3		N	SUBFEED "MA"	7752			36
37		7600		37	--	N				--	--	X	--	--		N	--		7713		38
39			6900	39	--	N				--	--	X	--	--		N	--			6760	40
41	13852	13540	14410		PHASE TOTALS												PHASE TOTALS	24132	24025	21830	
	Total Phase A:			37234														CONNECTED VA (CODE K0):			53294	
	Total Phase B:			34565														CONNECTED VA (CODE L1):				
	Total Phase C:			32240														CONNECTED VA (CODE R):			10530	
																		CONNECTED VA (CODE X1):				
																		TOTAL CONNECTED KVA:			103.5	
																		DEMAND KVA:			-5.3	
																		TOTAL ADJUSTED KVA:			103.5	
																		TOTAL PANEL AMPS:			328.5	
																		AMPS W/LCL:			328.5	

3/5/04 3:29 PM

PANEL: PC | LOCATION: BUILDING "C" | MOUNTING: SURFACE | PANEL VOLTAGE: 120/208 3P, 4W | BUS: 225A | MAIN: 65,000 A.I.C. RATED | AIC RATING: | CIRCUIT CODE: N: NON-CONTINUOUS, L: LONG-CONTINUOUS, R: DEMANDABLE RECEPTACLES, K: KITCHEN

S	VA LOAD A	VA LOAD B	VA LOAD C	S	LOAD DESCRIPTION	S	W	R	L	TYPE CKT. TR	P	A B C	C.B.	BUS	C.B.	TYPE CKT. TR	P	L	R	W	S	LOAD DESCRIPTION	VA LOAD A	VA LOAD B	VA LOAD C	S
1	360			1	CLASSROOM RECEPTS	E		2		20	1	X	20	1	3	E	MORNXSCH RECEPTS	540			2
3		360		3	CLASSROOM RECEPTS	E		2		20	1	X	20	1	3	E	MORNXSCH RECEPTS		540		4
5			360	5	CLASSROOM RECEPTS	E		2		20	1	X	20	1	3	E	MORNXSCH RECEPTS			360	6
7	360			7	CLASSROOM RECEPTS	E		2		20	1	X	20	1	3	E	MORNXSCH RECEPTS	360			8
9		360		9	CLASSROOM RECEPTS	E		2		20	1	X	20	1	3	E	MORNXSCH RECEPTS		360		10
11			360	11	CLASSROOM RECEPTS	E		2		20	1	X	20	1	3	E	MORNXSCH RECEPTS			360	12
13	360			13	CLASSROOM RECEPTS	E		2		20	1	X	20	1	3	E	MORNXSCH RECEPTS	360			14
15		360		15	CLASSROOM RECEPTS	E		2		20	1	X	20	1	3	E	MORNXSCH RECEPTS		360		16
17			360	17	CLASSROOM RECEPTS	E		2		20	1	X	20	1	3	E	MORNXSCH RECEPTS			360	18
19	360			19	CLASSROOM RECEPTS	E		2		20	1	X	20	1	3	E	MORNXSCH RECEPTS	360			20
21		360		21	CLASSROOM RECEPTS	E		2		20	1	X	20	1	3	E	MORNXSCH RECEPTS		360		22
23			360	23	CLASSROOM RECEPTS	E		2		20	1	X	20	1	3	E	MORNXSCH RECEPTS			360	24
25	1500			25	LB. COMPUTER	E		3		20	1	X	20	1	3	E	LIBRARY RECEPTS	720			26
27		1500		27	LB. COMPUTER	E		3		20	1	X	20	1	3	E	LIBRARY RECEPTS		540		28
29			1500	29	LB. COMPUTER	E		3		20	1	X	20	1	3	E	LIBRARY RECEPTS			540	30
31	1500			31	LB. COMPUTER	E		3		20	1	X	20	1	3	E	CLASSROOM RECEPTS	540			32
33		1500		33	LB. COMPUTER	E		3		20	1	X	20	1	3	E	CLASSROOM RECEPTS		540		34
35			1500	35	LB. COMPUTER	E		3		20	1	X	20	1	3	E	CLASSROOM RECEPTS			720	36
37	1500			37	LB. COMPUTER	E		3		20	1	X	20	1	3	E	STORAGE RECEPT	720			38
39		1500		39	LB. COMPUTER	E		3		20	1	X	20	1	3	E	STORAGE RECEPT		360		40
41			1500	41	LB. COMPUTER	E		3		20	1	X	20	1	3	E	STORAGE RECEPT			720	42
43	540			43	GREEN ROOM RECEPTS	E		2		20	1	X	20	1	4	E	WORKROOM/OFFICE RECEPTS	720			44
45		360		45	GREEN ROOM RECEPTS	E		2		20	1	X	20	1	4	E	WORKROOM/OFFICE RECEPTS		720		46
47			360	47	GREEN ROOM RECEPTS	E		2		20	1	X	20	1	4	E	WORKROOM/OFFICE RECEPTS			720	48
49	900			49	WRRTT LTG	L				15	3	X	20	1	4	E	WORKROOM/OFFICE RECEPTS	720			50
51		360		51	LB. DESK	E		2		20	1	X	20	1	4	E	BOOK RETENTION SYSTEM		360		52
53	1500			53	LB. DESK	E		3		20	1	X	20	1	4	E	SPARE				54
55		1500		55	LB. COMPUTER	E		3		20	1	X	20	1	4	E	SPARE				56
57			1500	57	LB. COMPUTER	E		3		20	1	X	20	1	4	E	SPARE				58
59	9460			59	SUBFEED EXISTING "MA"	N				90	3	X	100	3		N	SUBFEED "MA2"		3304		60
61		9050		61	--	N				--	--	X	--	--		N	--			3138	62
63			8045	63	--	N				--	--	X	--	--		N	--				64
65	16400	16000	13500		PHASE TOTALS												PHASE TOTALS	8194	5858	5062	
	Total Phase A:			25124														CONNECTED VA (CODE K0):			39999	
	Total Phase B:			21430														CONNECTED VA (CODE L1):			900	
	Total Phase C:			20857														CONNECTED VA (CODE R):			26760	
																		CONNECTED VA (CODE X1):				
																		TOTAL CONNECTED KVA:			67.7	
																		DEMAND KVA:			-6.4	
																		TOTAL ADJUSTED KVA:			59.3	
																		TOTAL PANEL AMPS:			168.1	
																		AMPS W/LCL:			160.0	

3/26/04 11:13 AM

PANEL: PD2 | LOCATION: BUILDING "D" | MOUNTING: SURFACE | PANEL VOLTAGE: 120/208 3P, 4W | BUS: 100A | MAIN: L.O. | AIC RATING: 22,000 A.I.C. RATED | CIRCUIT CODE: N: NON-CONTINUOUS, L: LONG-CONTINUOUS, R: DEMANDABLE RECEPTACLES, K: KITCHEN

S	VA LOAD A	VA LOAD B	VA LOAD C	S	LOAD DESCRIPTION	S	W	R	L	TYPE CKT. TR	P	A B C	C.B.	BUS	C.B.	TYPE CKT. TR	P	L	R	W	S	LOAD DESCRIPTION	VA LOAD A	VA LOAD B	VA LOAD C	S
1	1200			1	CLASS 180 RECEPTS	E		4		20	1	X	20	1	1	R	ENERGY MANAGEMENT CAB	500			2
3		1680		3	CLASS 180 RECEPTS	E		4		20	1	X	20	1	1	R	WARN TELEPHONE BACKBOARD		500		4
5			1680	5	CLASS 180 RECEPTS	E		4		20	1	X	20	1	1	R	CABLE TV BACKBOARD			500	6
7	1680			7	CLASS 180 RECEPTS	E		4		20	1	X	20	1	1	R	SPARE	180			8
9		1200		9	CLASS 180 RECEPTS	E		4		20	1	X	20	1	1	R	TELEPHONE SWITCH		500		10
11			1680	11	CLASS 180 RECEPTS	E		4		20	1	X	20	1	1	R	TELEPHONE BACKBOARD	500			12
13	1680			13	CLASS 180 RECEPTS	E		4		20	1	X	20	1	1	R	WARN SWCH BACKBOARD		1000		14
15		1680		15	CLASS 180 RECEPTS	E		4		20	1	X	20	1	1	R	TELEPHONE COMPANY SWITCH			500	16
17	1680			17	CLASS 180 RECEPTS	E		4		25	1	X	20	1	1	R	CLASS 181 RECEPTS	1200			18
19		1620		19	CLASS 180 RECEPTS	E		4		25	1	X	20	1	1	R	CLASS 181 RECEPTS		1680		20
21			1440	21	CLASS 180 RECEPTS	E		4		20	1	X	20	1	1	R	CLASS 181 RECEPTS			1680	22
23				23	SPARE					20	1	X	20	1	1	R	CLASS 181 RECEPTS	1680			24
25				25	SPARE					20	1	X	20	1	1	R	CLASS 181 RECEPTS		1200		26
27				27	SPARE					20	1	X	20	1	1	R	CLASS 181 RECEPTS			1680	28
29				29	SPARE								20	1	1	R	CLASS 181 RECEPTS	1680			30
31				31	SPACE								20	1	1	R	CLASS 181 RECEPTS		1680		32
33				33	SPACE								20	1	1	R	CLASS 181 RECEPTS	1680			34
35				35	SPACE								20	1	1	R	CLASS 181 RECEPTS		1620		36
37				37	SPACE								20	1	1	R	CLASS 181 RECEPTS			1440	38
39	6240	6180	6000	39	PHASE TOTALS												PHASE TOTALS	7420	6180	7000	
	Total Phase A:			13660														CONNECTED VA (CODE K0):				
	Total Phase B:			12360														CONNECTED VA (CODE L1):				
	Total Phase C:			13500														CONNECTED VA (CODE R):			41520	
																		CONNECTED VA (CODE X1):				
																		TOTAL CONNECTED KVA:			41.5	
																		DEMAND KVA:			-10.8	
																		TOTAL ADJUSTED KVA:			25.8	
																		TOTAL PANEL AMPS:			71.7	
																		AMPS W/LCL:			71.7	

4/21/04 2:20 PM

PANEL: PD | LOCATION: BUILDING "D" | MOUNTING: SURFACE | PANEL VOLTAGE: 120/208 3P, 4W | BUS: 400A | MAIN: L.O. | AIC RATING: 22,000 A.I.C. RATED | CIRCUIT CODE: N: NON-CONTINUOUS, L: LONG-CONTINUOUS, R: DEMANDABLE RECEPTACLES, K: KITCHEN

S	VA LOAD A	VA LOAD B	VA LOAD C	S	LOAD DESCRIPTION	S	W	R	L	TYPE CKT. TR	P	A B C	C.B.	BUS	C.B.	TYPE CKT. TR	P	L	R	W	S	LOAD DESCRIPTION	VA LOAD A	VA LOAD B	VA LOAD C	S
1	1200			1	CLASS 182 RECEPTS	E		4		20	1	4	E	CLASS 183 RECEPTS	1200			2
3		1680		3	CLASS 182 RECEPTS	E		4		20	1	X	20	1	4	E	CLASS 183 RECEPTS		1680		4
5			1680	5	CLASS 182 RECEPTS	E		4		20	1	4	E	CLASS 183 RECEPTS			1680	6
7	1680			7	CLASS 182 RECEPTS	E		4		20	1	4	E	CLASS 183 RECEPTS	1680			8
9		1200		9	CLASS 182 RECEPTS	E		4		20	1	X	20	1	4	E	CLASS 183 RECEPTS		1200		10
11			1680	11	CLASS 182 RECEPTS	E		4		20	1	X	20	1	4	E	CLASS 183 RECEPTS			1680	12
13	1680			13	CLASS 182 RECEPTS	E		4		20	1	4	E	CLASS 183 RECEPTS	1680			14
15		1680		15	CLASS 182 RECEPTS	E		4		20	1	4	E	CLASS 183 RECEPTS		1680		16
17			1200	17	CLASS 182 RECEPTS	E		4		20	1	4	E	CLASS 183 RECEPTS			1680	18
19	1680			19	CLASS 182 RECEPTS	E		4		20	1	4	E	SPARE				20
21		1620		21	CLASS 182 RECEPTS	E		4		20	1	X	20	1	1	R	SIGNAL RECEPT	750			22
23			1440	23	CLASS 182 RECEPTS	E		4		20	1	1	E	SIGNAL RECEPT		750		24
25	1680			25	CLASS 183 RECEPTS	E		4		20	1	1	E	SIGNAL RECEPT	750			26
27		1620		27	CLASS 183 RECEPTS	E		3		20	1	3	E	RECEPTS		540		28
29			1440	29	CLASS 183 RECEPTS	E		3		20	1	3	E	RECEPTS			360	30
31				31	SPARE					20	1	1	E	RECEPTS	360			32
33				33	SPARE					20	1	X	20	1			SPARE				34
35				35	SPARE					20	1	X	20	1			SPARE				36
37				37	SPARE					20	1	X	130	3		N	SUBFEED EXISTING "DA"	13452			38
39				39	SPARE					20	1	X	--	--		N	--		12550		40
41				41	SPARE					20	1	X	--	--		N	--			13550	42
	7031	7031	3080		PHASE TOTALS												PHASE TOTALS	19131	19131	18870	
	Total Phase A:			27040														CONNECTED VA (CODE K0):			40132	
	Total Phase B:			27040														CONNECTED VA (CODE L1):				
	Total Phase C:			26410														CONNECTED VA (CODE R):			42200	
																		CONNECTED VA (CODE X1):				
																		TOTAL CONNECTED KVA:			82.3	
																		DEMAND KVA:			-15.2	
																		TOTAL ADJUSTED KVA:			67.1	
																		TOTAL PANEL AMPS:			181.4	
																		AMPS W/LCL:			181.4	

3/26/04 4:17 PM

PANEL: PE | LOCATION: BUILDING "D" | MOUNTING: SURFACE | PANEL VOLTAGE: 120/208 3P, 4W | BUS: 400A | MAIN: 300A, 3P C.B. | AIC RATING: 65,000 A.I.C. RATED | CIRCUIT CODE: N: NON-CONTINUOUS, L: LONG-CONTINUOUS, R: DEMANDABLE RECEPTACLES, K: KITCHEN

S	VA LOAD A	VA LOAD B	VA LOAD C	S	LOAD DESCRIPTION	S	W	R	L	TYPE CKT. TR	P	A B C	C.B.	BUS	C.B.	TYPE CKT. TR	P	L	R	W	S	LOAD DESCRIPTION	VA LOAD A	VA LOAD B	VA LOAD C	S
1	720			1	RETRXSCH RECEPTS	E		4		20	1	X	20	1	2	E	WORKROOM RECEPTS	540			2
3		540		3	CLASSROOM RECEPTS	E		3		20	1	X	20	1	2	E	WORKROOM RECEPTS		360		4
5			360	5	CLASSROOM RECEPTS	E		2		20	1	X	20	1	2	E	WORKROOM RECEPTS			360	6
7	360			7	CLASSROOM RECEPTS	E		2		20	1	X	20	1	2	E	CLASSROOM RECEPTS	360			8
9		540		9	CLASSROOM RECEPTS	E		3		20	1	X	20	1	2	E	CLASSROOM RECEPTS		540		10
11			360	11	MATERIALS RECEPTS	E		2		20	1	X	20	1	2	E	CLASSROOM RECEPTS			360	12
13	360			13	MATERIALS RECEPTS	E		2		20	1	X	20	1	2	E	CLASSROOM RECEPTS	360			14
15		360		15	MATERIALS RECEPTS	E		2		20	1	X	20	1	2	E	CLASSROOM RECEPTS		360		16
17			360	17	MATERIALS RECEPTS	E		2		20	1	X	20	1	2	E	CLASSROOM RECEPTS			360	18
19	540			19	WRKSLDMAR LIFT	E		3		20	1	X	20	1	2	E	CLASSROOM RECEPTS	360			20
21		540		21	C-11 (1/3MP)	E		3		20	1	X	20	1	2	E	CLASSROOM RECEPTS		360		22
23			540	23	C-12	N	1			20	1	X	20	1	3	E	CLASSROOM RECEPTS			540	24
25	500			25	DATA BR	E		1		20	1	X	20	1	3	E	CLASSROOM RECEPTS	360			26
27		500		27	** FIRE ALARM EXPANDER PNL	E		1		20	1	20	1				SPARE				28
29			250	29	CLOCK CAB	E		1		20	1						SPARE				30
31	250			31	ENERGY MANAGEMENT	E		1		20	1	X					SPACE				32
33				33	SPARE					20	1	X					SPACE				34
35				35	SPARE					20	1	X					SPACE				36
37				37	SPARE					20	1	X					SPACE				38
39				39	SPARE					20	1	X					SPACE				40
41				41	SPARE					20	1	X					SPACE				42
	2765	1880	1830		PHASE TOTALS												PHASE TOTALS	2723	2305	2580	
	Total Phase A:			5498														CONNECTED VA (CODE K0):			5203	
	Total Phase B:			4185														CONNECTED VA (CODE L1):				
	Total Phase C:			4410														CONNECTED VA (CODE R):			8770	
																		CONNECTED VA (CODE X1):				
																		TOTAL CONNECTED KVA:			14.0	
																		DEMAND KVA:				
																		TOTAL ADJUSTED KVA:			14.0	
																		TOTAL PANEL AMPS:			45.9	
																		AMPS W/LCL:			45.9	

3/5/04 3:28 PM

PANEL: PF | LOCATION: BUILDING "D" | MOUNTING: SURFACE | PANEL VOLTAGE: 120/208 3P, 4W | BUS: 225A | MAIN: 150A, 3P C.B. | AIC RATING: 22,000 A.I.C. RATED | CIRCUIT CODE: N: NON-CONTINUOUS, L: LONG-CONTINUOUS, R: DEMANDABLE RECEPTACLES, K: KITCHEN

S	VA LOAD A	VA LOAD B	VA LOAD C	S	LOAD DESCRIPTION	S	W	R	L	TYPE CKT. TR	P	A B C	C.B.	BUS	C.B.	TYPE CKT. TR	P	L	R	W	S	LOAD DESCRIPTION	VA LOAD A	VA LOAD B	VA LOAD C	S
1	540			1	STORAGE RM RECEPT	E		3		20	1	X	20	1	3	E

1. FIRE ALARM SYSTEM IS A FULLY AUTOMATIC SYSTEM. THE AUTOMATIC ALARM SYSTEM SHALL COVER ALL ROOMS AND AREAS AND UPON ACTIVATION OF AN INITIATING DEVICE ALERT ALL OCCUPANTS AND TRANSMIT THE ALARM SUPERVISORY AND TROUBLE SIGNALS TO AN APPROVED SUPERVISING STATION. (EXCEPTION: SMOKE DETECTORS ARE NOT REQUIRED IN NON-ACCESSIBLE AREAS AS DEFINED IN CBC SECTION 210 (CBC SECTION 1006.2.4.2.1.1 AND 1006.2.4.2.2.1.5)
2. WALL- MOUNTED VISIBLE NOTIFICATION APPLIANCES SHALL HAVE THEIR BOTTOMS AT HEIGHTS ABOVE THE FINISHED FLOOR OF NOT LESS THAN 80 INCHES AND NO GREATER THAN 96 INCHES, PER NFPA 72 – 1999 EDITION.
3. ALL EQUIPMENT SHALL BE U.L. AND C.S.F.M. LISTED.
4. ALL WIRING SHALL BE IN ACCORDANCE WITH THE C.E.C. AND AUTHORITIES HAVING JURISDICTION.
5. ALL JUNCTION BOXES SHALL BE SIZED IN ACCORDANCE WITH THE C.E.C. △1
6. ELECTRICAL CONTRACTOR SHALL FURNISH ACCESS PANELS TO AREAS THAT REQUIRE SERVICING, TROUBLE SHOOTING, ETC.
7. DO NOT DEVIATE FROM CONDUIT RUNS AS SHOWN ON FLOOR PLANS WITHOUT PRIOR APPROVAL FROM SYSTEM SUPPLIER (PYRO-COMM SYSTEMS, INC., TEL (714) 902-8000). FACTORS SUCH AS EXCESSIVE VOLTAGE DROP, ADDITIONAL PARTS, ENGINEERING, ETC., THAT ARE A RESULT OF CONDUIT RUN DEVIATIONS SHALL BE THE SOLE RESPONSIBILITY OF THE ELECTRICAL CONTRACTOR.
8. DETECTORS SHALL NOT BE LOCATED IN A DIRECT AIR-FLOW, NOR CLOSER THAN 3 FEET (900mm) FROM AN AIR SUPPLY DIFFUSER.
9. ALL FAN SHUTDOWN FUNCTIONS, DAMPER CLOSURES, AND ASSOCIATED MECHANICAL SYSTEM FIRE ALARM INTERFACE SHALL BE BY MECHANICAL CONTRACTOR.
10. ALL DUCT SMOKE DETECTORS SHALL BE MOUNTED BY THE MECHANICAL CONTRACTOR. DUCT SMOKE DETECTORS EXPOSED TO THE WEATHER SHALL BE WEATHER PROTECTED BY THE MECHANICAL CONTRACTOR. ALL AIR VELOCITY TESTING SHALL BE PERFORMED BY THE MECHANICAL CONTRACTOR.
11. ALL 120VAC POWER REQUIREMENTS FOR THE FIRE ALARM SYSTEM SHALL BE FURNISHED BY THE ELECTRICAL CONTRACTOR AND SHALL MEET ALL REQUIREMENTS OF THE AUTHORITIES HAVING JURISDICTION.
12. ALL FIRE ALARM DEVICE BACKBOXES, FIRE ALARM TERMINAL CABINETS, GUTTERS, JUNCTION BOXES, AND ASSOCIATED CONDUITS SHALL BE FURNISHED AND INSTALLED BY ELECTRICAL CONTRACTOR UNLESS OTHERWISE NOTED. REFER TO FIRE ALARM SYMBOL LIST AND/OR MOUNTING DETAILS FOR ADDITIONAL INFORMATION. SYSTEM SUPPLIER PROVIDED BACKBOXES SHALL BE INSTALLED BY ELECTRICAL CONTRACTOR UNLESS OTHERWISE NOTED.
13. SMOKE DETECTOR TESTING SHALL BE ACCOMPLISHED WITH TEST MAGNETS AS PER THE MANUFACTURER'S INSTRUCTIONS.
14. ALL WIRING, INITIATING DEVICES AND ANNUNCIATOR PANEL SHALL BE SUPERVISED TO THE PRINCIPAL POINT OF ANNUNCIATION. THE FIRE ALARM CONTROL PANEL TO SUPERVISE THE ANNUNCIATOR PANEL, ALL INITIATING AND INDICATING DEVICE CIRCUITS.
15. ALL WIRING SHALL BE CUT FOR IN AND OUT. WIRING SHALL NOT BE LOOPED THROUGH DEVICES.
16. POINT AND COMMON ANNUNCIATION AND T-TAPPING ARE PROHIBITED.
17. PROVIDE 3/4" CONDUIT FROM FIRE ALARM CONTROL PANEL TO TELEPHONE BACKBOARD FOR OWNER PROVIDED CENTRAL STATION MONITORING.
18. THE ALARM SYSTEM SHALL HAVE AN AUDIBILITY OF NOT LESS THAN 15dB ABOVE AMBIENT NOISE LEVELS. TESTING SHALL BE ACCOMPLISHED WITH A dB METER.
19. ALL CONDUITS ARE 3/4" UNLESS OTHERWISE NOTED.
20. ALL FLOW SWITCHES SHALL BE 2 WIRE WITH NON-ELECTRONIC RETARD TYPE SIMILAR TO THE SYSTEM SENSOR MODEL "WFD SERIES" ONLY.
21. ALL DEVICES IN THE ALARM SYSTEM SHALL BE COMPATIBLE AND INSTALLED PER MANUFACTURER'S SPECIFICATIONS.
22. SYSTEM SHALL BE FURNISHED AND INSTALLED BY A NESCO AFFILIATE.
23. FIRE ALARM SYSTEM INSTALLER SHALL BE NICET LEVEL 2 CERTIFIED.
24. FIRE ALARM SYSTEM INSTALLATION COMPANY SHALL BE UL LISTED (UUJS).
25. THE FIRE ALARM EVACUATION SIGNAL SHALL BE THE STANDARD THREE-PULSE TEMPORAL PATTERN PER THE "EXCEPTION" OF 1998 CALIFORNIA BUILDING CODE SECTION 3505.1 SUBSECTION 1-5.4.7.1.
EXCEPTION: WHEN A FIRE ALARM SYSTEM HAVING A DISTINCTIVE TONE, AND WHICH IS USED FOR NO MATTER OF SOUNDING SUCH ALARM SHALL NOT BE SUBJECT TO THE PROVISIONS OF EDUCATION CODE SECTIONS 32002, 32003 AND 32004.

FIRE ALARM GENERAL NOTES

ACTION \ DEVICE	MANUAL PULL STATION	AREA SMOKE DETECTOR	120VAC POWER FAILURE	DUCT SMOKE DETECTOR	AREA HEAT DETECTOR
SOUND CONTROL PANEL TROUBLE BUZZER	YES	YES	YES	YES	YES
ACTIVATE RELAY FOR CENTRAL STATION MONITORING (ALARM OR TROUBLE)	YES	YES	YES	YES	YES
ANNUNCIATE AT FIRE CONTROL PANEL (ALARM OR TROUBLE)	YES	YES	YES	YES	YES
ANNUNCIATE AT REMOTE FIRE ALARM ANNUNCIATOR (ALARM OR TROUBLE)	YES	YES	YES	YES	YES
ACTIVATE AUDIBLE/ VISUAL ALARM SIGNAL THROUGHOUT BUILDING	YES	YES	NO	YES	YES
SHUT DOWN ALL AIR HANDLING (HVAC) THROUGHOUT BUILDING	NO	NO	NO	YES	NO
CLOSE SMOKE FIRE DAMPERS	NO	YES	NO	NO	NO
CENTRAL STATION MONITORING	YES	YES	YES	YES	YES

△1

FIRE ALARM SEQUENCE OF OPERATIONS

△1

A. APPLICABLE CODES AND STANDARDS

2001 Building Standards Administrative Code, Part 1, Title 24 C.C.R.
2001 California Building Code (CBC), Part 2, Title 24 C.C.R.
2001 California Electrical Code (CEC), Part 3, Title 24 C.C.R.
2001 California Mechanical Code (CMC), Part 4, Title 24 C.C.R.
2001 California Plumbing Code (CPC), Part 5, Title 24 C.C.R.
2001 California Energy Code, Part 6, Title 24 C.C.R.
2001 California Elevator Safety Construction Code, Part 7, Title 24, C.C.R.
2001 California Historical Building Code, Part 8, Title 24, C.C.R.
2001 California Fire Code (CFC), Part 9, Title 24, C.C.R.
2001 California Referenced Standards Code, Part 12, Title 24, C.C.R.
1990 Title 19 C.C.R., Public Safety, State Fire Marshall Regulations.

B. PARTIAL LIST OF APPLICABLE NFPA STANDARDS:

NFPA 13-Automatic Sprinkler Systems 1996 Edition	1999 Edition
NFPA 14-Standpipes Systems	2000 Edition
NFPA 17-Dry Chemical Extinguishing Systems	1998 Edition
NFPA 17a-Wet Chemical Systems	1998 Edition
NFPA 20-Stationary Pumps	1999 Edition
NFPA 24-Private Fire Mains (included in 1999 NFPA 13)	1995 Edition
NFPA 72-National Fire Alarm Code (California Amended) (Note: See UL Standard 1971 for "Visual Devices")	1999 Edition
NFPA 253-Critical Radiant Flux of Floor Covering Systems	2000 Edition
NFPA 2001-Clean Agent Fire Extinguishing Systems	2000 Edition

Reference code section for NFPA Standards – 2001 CBC [sfm] 3504.1

APPLICABLE CODES/STANDARDS

SYMBOL	DESCRIPTION	MODEL	MANUFACTURER	BACKBOX	MOUNTING HEIGHT	C.S.F.M. NUMBER
FACP	FIRE ALARM CONTROL PANEL	AM2020	NOTIFIER	CAB-C3 PROVIDED	5'-6" A.F.F. TO TOP	7165-0028:141
R.A.	FIRE ALARM REMOTE ANNUNCIATOR	LCD-80	NOTIFIER	PROVIDED	5'-6" A.F.F. TO TOP	7120-0028:156
PS	AUDIO/VISUAL POWER SUPPLY	FCPS-24	NOTIFIER	PROVIDED	5'-6" A.F.F. TO TOP	7135-0028:178
	MANUAL PULL STATION (ADDRESSABLE)	NBG-12LX	NOTIFIER	4S DEEP BOX W/ SINGLE GANG RING	48" A.F.F. TO CENTER	7150-0028:199
	AREA SMOKE DETECTOR	FSP-751	NOTIFIER	4S DEEP BOX W/ 3-0 RING	VERIFY IN FIELD	7272-0028:175
	SMOKE FIRE DAMPER DUCT SMOKE DETECTOR	FSD-751P	NOTIFIER	PROVIDED	VERIFY IN FIELD	3240-0028:205
	AREA HEAT DETECTOR	FST-751	NOTIFIER	4S DEEP BOX W/ 3-0 RING	ABOVE CEILING	7270-0028:196
WP	FIRE ALARM HORN	H12/24K	SYSTEM SENSOR	WBB BACKBOX PROVIDED	90" A.F.F. TO TOP	7125-0785:131
	FIRE ALARM HORN	H12/24	SYSTEM SENSOR	4S DEEP BOX W/ SINGLE GANG RING	90" A.F.F. TO TOP	7125-0785:131
15cd	FIRE ALARM HORN / STROBE (15cd)	P2415	SYSTEM SENSOR	4S DEEP BOX W/ 4S EXTENSION	80" A.F.F. TO BOTTOM	7125-0785:131
75cd	FIRE ALARM HORN / STROBE (75cd)	P2475	SYSTEM SENSOR	4S DEEP BOX W/ 4S EXTENSION	80" A.F.F. TO BOTTOM	7125-0785:131
110cd	FIRE ALARM HORN / STROBE (110cd)	P24110	SYSTEM SENSOR	4S DEEP BOX W/ 4S EXTENSION	80" A.F.F. TO BOTTOM	7125-0785:131
15cd	FIRE ALARM STROBE (15cd)	S2415	SYSTEM SENSOR	4S DEEP BOX NO RING	80" A.F.F. TO BOTTOM	7125-0785:141
30cd	FIRE ALARM STROBE (30cd)	S2430	SYSTEM SENSOR	4S DEEP BOX NO RING	80" A.F.F. TO BOTTOM	7125-0785:141
75cd	FIRE ALARM STROBE 75cd	S2475	SYSTEM SENSOR	4S DEEP BOX NO RING	80" A.F.F. TO BOTTOM	7125-0785:141
110cd	FIRE ALARM STROBE 110cd	S24110	SYSTEM SENSOR	4S DEEP BOX NO RING	80" A.F.F. TO BOTTOM	7125-0785:141
SYNC	FIRE ALARM SYNC MODULE	MDL	NOTIFIER	N/A	VERIFY IN FIELD	7300-1209:179
J	FIRE ALARM JUNCTION BOX	N/A	BY ELECTRICIAN	4S BOX U.O.N.	VERIFY IN FIELD	N/A
FATC	FIRE ALARM TERMINAL CABINET	N/A	BY ELECTRICIAN	18 x 18 x 6 U.O.N.	VERIFY IN FIELD	N/A

FIRE ALARM SYSTEM SYMBOLS LEGEND

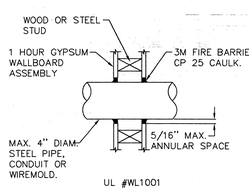

UL #WL1001

PENETRATION THRU GYPSUM BOARD WALL
NO SCALE

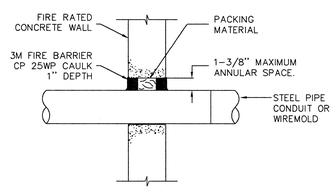

UL #CAJ1044

PENETRATION THRU CONCRETE WALL
NO SCALE

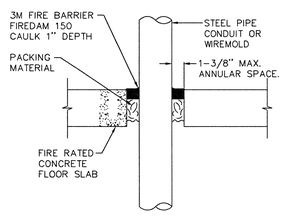

UL #CAJ1017

PENETRATION THRU CONCRETE FLOOR
NO SCALE

SYSTEM NO. WL1001
(FORMERLY SYSTEM NO. 147)
F RATINGS – 1,2,3, AND 4 HR (SEE ITEMS 2 AND 3)
T RATINGS – 0,1,2,3, AND 4 HR (SEE ITEM 3)
L RATING AT AMBIENT – LESS THAN 1 CFM/SQ FT (SEE ITEM 3)
L RATING AT 400 F – LESS THAN 1 CFM/SQ FT (SEE ITEM 3)

1. WALL ASSEMBLY – THE 1,2,3 OR 4 HR FIRE –RATED GYPSUM WALL BOARD/STUD WALL ASSEMBLY SHALL BE CONSTRUCTED OF THE MATERIALS AND IN THE MANNER DESCRIBED IN THE INDIVIDUAL U300 OR U400 SERIES WALL OR PARTITION DESIGN IN THE UL FIRE RESISTANCE DIRECTORY AND SHALL INCLUDE THE FOLLOWING CONSTRUCTION FEATURES :

A. STUDS – WALL FRAMING MAY CONSIST OR EITHER WOOD STUDS (MAX. 2 HR FIRE RATED ASSEMBLIES) OR STEEL CHANNEL STUDS. WOOD STUDS TO CONSIST OF NOM 2 BY 6 IN. LUMBER SPACED IN 16 IN. OC WIT NOM 2 BY 6 IN. LUMBER AND PLATES AND CROSS BRACES. STEEL STUDS TO BE MIN. 3-8/8 IN. WIDE BY 1-3/8 IN. DEEP CHANNELS SPACED MAX. 24 IN. CC .

B. WALLBOARD, GYPSUM – NOM 1/2 OR 5/8 IN. THICK , 4 FT. WIDE WITH SQUARE OR TAPERED EDGES. THE GYPSUM WALLBOARD RYPS, THICKNESS, NUMBER OF LAYERS, FASTENER TYPE AND SHEET ORIENTATION SHALL BE SPECIFIED IN THE INDIVIDUAL U300 OR U400 SERIES DESIGN IN THE UL FIRE RESISTANCE DIRECTORY . MAX. DIAM. OF OPENING IS 13-1/2 IN.

2. PIPE OR CONDUIT – NOM 12 IN. DIAM. (OR SMALLER) SCHEDULE 10 (OR HAVIER) STEEL PIPE NOM 6 IN. DIAM. (OR SMALLER) STEEL CONDUIT, NOM 4 IN. DIAM. (OR SMALLER) STEEL ELECTRICAL METALLIC TUBING OR TYPE L OR (OR HAVIER) COPPER TUBING NOM1 IN. DIAM. (OR SMALLER) FLEXIBLE STEEL CONDUIT . WHEN COPPER PIPE OR FLEXIBLE STEEL CONDUIT IS USED , MAX. F RATING OF FIRESTOP SYSTEM (ITEM STRUCTED USING STEEL CHANNEL STUDS. A MAX. OF ONE PIPE OR CONDUIT IS PERMITTED IN THE FIRESTOP SYSTEM. PIPE OR CONDUIT TO BE INSTALLED NEAR CENTER OF STUD CAVITY WIDTH AND TO BE RIGIDLY SUPPORTED ON BOTH SIDES OF WALL ASSEMBLY .

3. FILL, VOID OR CAVITY MATERIAL – CAULK – CAULK FILL MATERIAL INSTALLED TO COMPLETELY FILL ANNULAR SPACE BETWEEN PIPE OR CONDUIT AND GYPSUM WALLBOARD AND WITH A MIN. 1/4 IN. DIAM. BOARD OF CHAULK APPLIED TO PERIMETER OF PIPE OR CONDUIT AT ITS EGRESS FROM THE WALL. CHAULK INSTALLED SYMMETRICALLY ON BOTH SIDES OF WALL ASSEMBLY. THE HOURLY F RATING OF THE FIRESTOP SYSTEM IS DEPENDENT UPON THE HOURLY FIRE RATING OF THE WALL ASSEMBLY IN WHICH IT IS INSTALLED, AS SHOWN IN THE FOLLOWING TABLE. THE HOURLY T RATING OF THE FIRESTOP SYSTEM IS DEPENDENT UPON THE TYPE OR SIZE OF THE PIPE OR CONDUIT AND THE HOURLY FIRE RATING OF THE WALL ASSEMBLY IN WHICH IT IS INSTALLED, AS TABULATED BELOW :

MAX. PIPE OR CONDUIT DIAM., IN	ANNULAR SPACE IN	F RATING HR	T RATING HR
1	0 TO 3/16	1 OR 2	0 + 1 OR 2
1	1/4 TO 1/2	3 OR 4	3 OR 4
4	0 TO 1/4	1 OR 2	0
6	1/4 TO 1/2	3 OR 4	0
12	3/16 TO 3/8	1 OR 2	0

+ WHEN COPPER PIPE IS USED , T RATING IS 0 NOM.
MINNESOTA MINING & MFG. CO. – TYPES CP-25 S/L, CP-25 N/8 , CP-25 WS, CP-25 WS + (NOTE: L RATINGS APPLY WHEN TYPE CP-25 WS+ CAULK IS USED.)

FIRE STOP/THRU-PENETRATION DETAIL

FIRE ALARM SYSTEM
COMPLETE PLAN SUBMITTAL

KEY PLAN

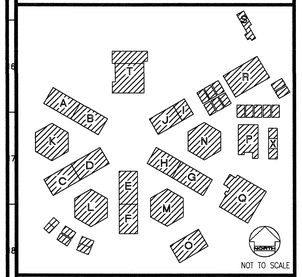

NOT TO SCALE

REVISED MAY 12 2004

IDENTIFICATION STAMP
DIV. OF THE STATE ARCHITECT
OFFICE OF REGULATION SERVICES
FILE NO. 19-H51
APPL. NO. 03-106434
AC ____ FLS ____ SS ____
DATE ____

Dougherty ■■ Dougherty
Architecture • Planning • Interior Design
3194-D Airport Loop Drive
Costa Mesa, CA 92626
(714) 427-0277

Copyright © 2002 Dougherty + Dougherty

GLP Engineering, Inc.
Mechanical • Electrical • Plumbing
3185-C Airway Avenue
Costa Mesa, CA 92626-4601
Telephone (714) 751-1851
Fax (714) 751-4216

Architect Seal

Consultant Seal

LA MIRADA HIGH SCHOOL MODERNIZATION
NORWALK - LA MIRADA UNIFIED SCHOOL DISTRICT
13520 ADELFA DRIVE LA MIRADA, CA 90638

FIRE ALARM SYSTEM INFORMATION

Date:	05-11-04
Job:	20237.50
Scale:	NONE
Drawn:	GLPK
Revisions:	
△1	12-01-03

E006

P:\Clients\Dsd\Norwalk-LaMirada SD\La Mirada HS Modernization 105.045\Drawings\105045e005.dwg May 11, 2004 - 3:26pm

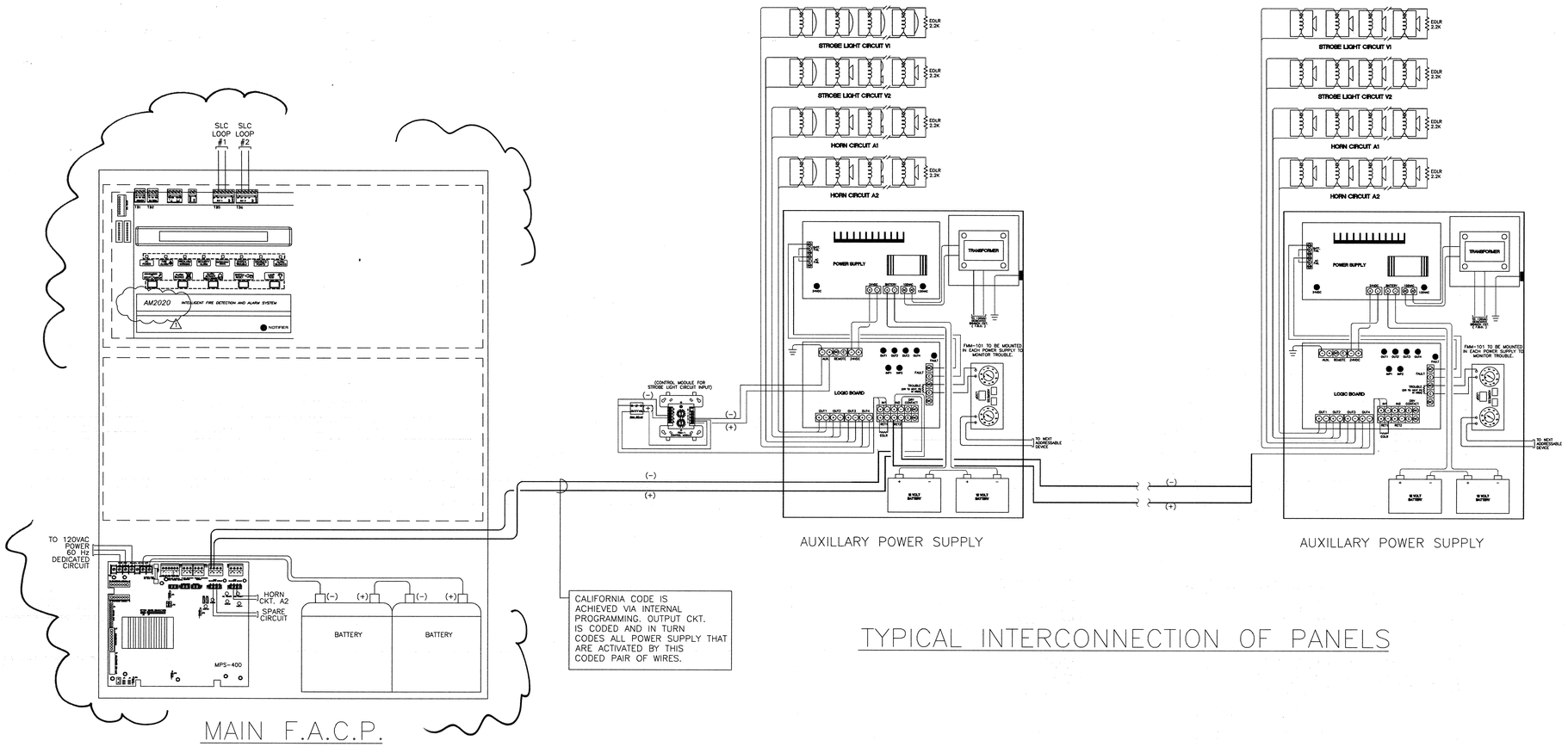

TYPICAL INTERCONNECTION OF PANELS

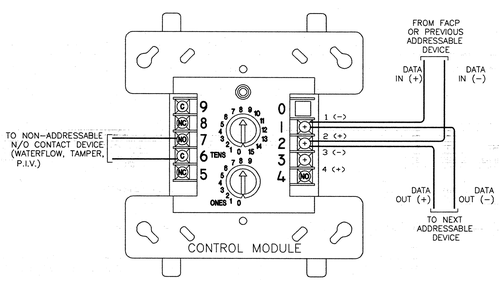

MONITOR MODULE WIRING

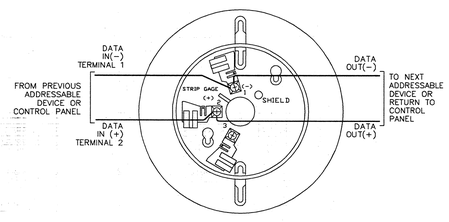

ADDRESSABLE SMOKE DETECTOR WIRING

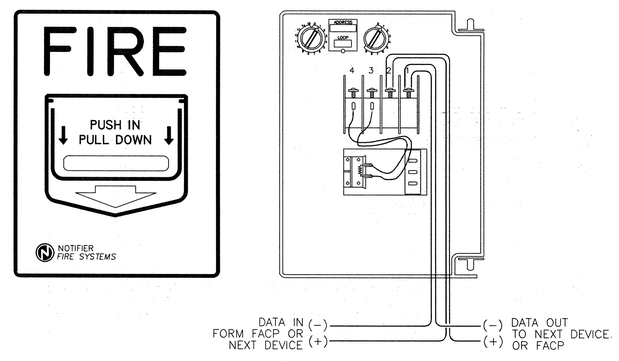

MANUAL STATION WIRING

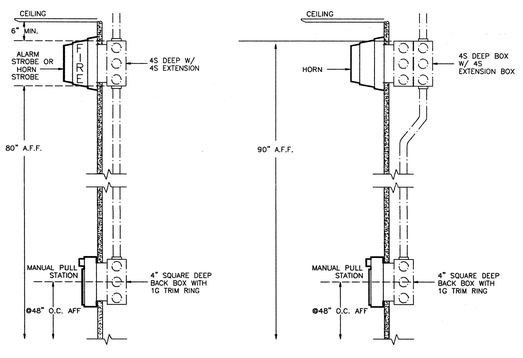

HEIGHT REQUIREMENTS PULL STATION – STROBE OR HORN/STROBE

HEIGHT REQUIREMENTS PULL STATION – HORN

WALL MOUNTED FIRE ALARM DEVICE MOUNTING ELEVATIONS

FIRE ALARM TYPICAL DEVICES WIRING DIAGRAMS

PLAN NOTES

FIRE ALARM SYSTEM COMPLETE PLAN SUBMITTAL

KEY PLAN

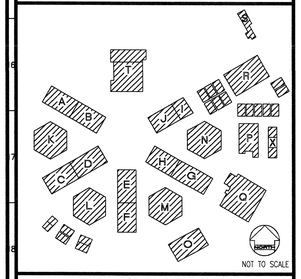

REVISED MAY 12 2004

IDENTIFICATION STAMP
DIV. OF THE STATE ARCHITECT
OFFICE OF REGULATION SERVICES
FILE NO. 19-H51
APPL. NO. 03-106434
AC ____ FLS. 4 SS ____
DATE ____

Dougherty + Dougherty
Architecture · Planning · Interior Design
3194-D Airport Loop Drive
Costa Mesa, CA 92626
(714) 427-0277

Copyright © 2002 Dougherty + Dougherty

GLP Engineering, Inc.
Mechanical and Electrical Engineers
3185-C Airway Avenue
Costa Mesa, CA 92626-4601
Telephone (714) 751-1851
Fax (714) 751-4216

Architect Seal

Consultant Seal

LA MIRADA HIGH SCHOOL
MODERNIZATION
NORWALK - LA MIRADA UNIFIED SCHOOL DISTRICT
13520 ADELFA DRIVE LA MIRADA, CA 90638

FIRE ALARM DETAILS

Date:	05-11-04
Job:	20237.50
Scale:	NONE
Drawn:	GLPK
Revisions:	

E007

P:\Clients\Q&G\Norwalk-LaMirada SD\La Mirada HS Modernization 105.045\Drawings\105045e007.dwg May 11, 2004 - 3:26pm

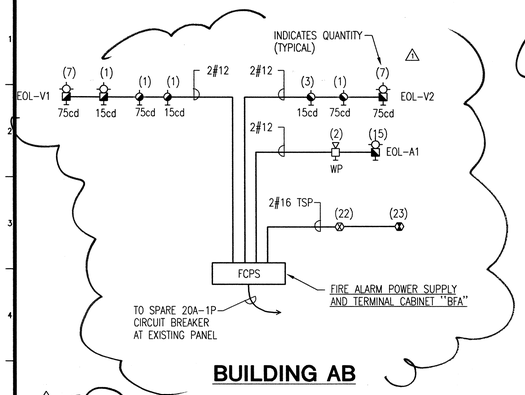

BUILDING AB

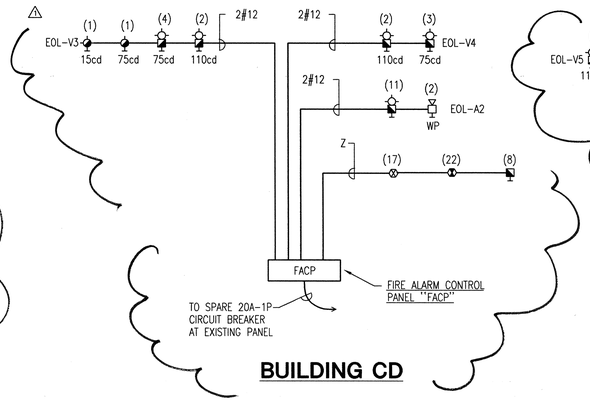

BUILDING CD

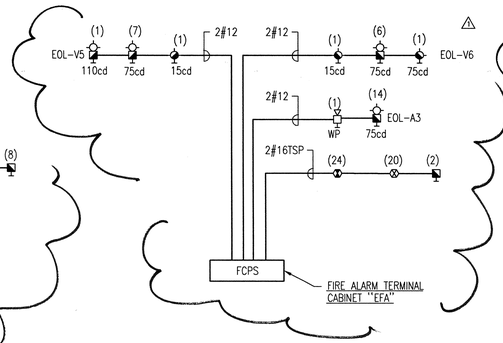

BUILDING EF

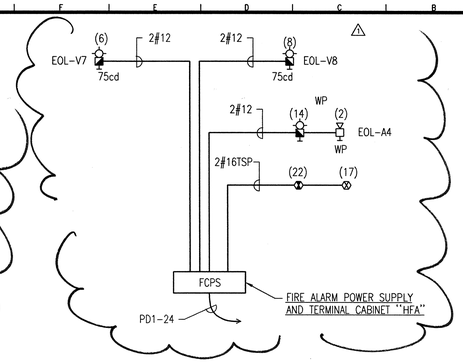

BUILDING GH

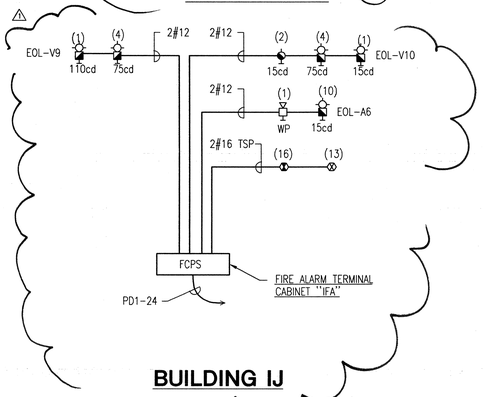

BUILDING IJ

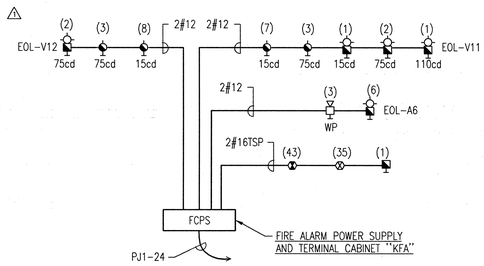

BUILDING K

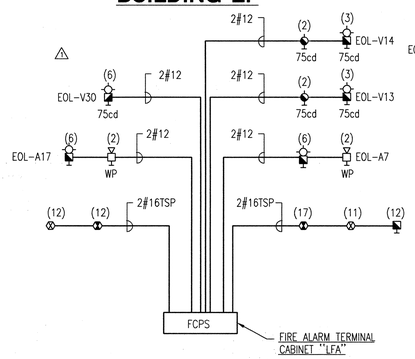

BUILDING L & RELOS

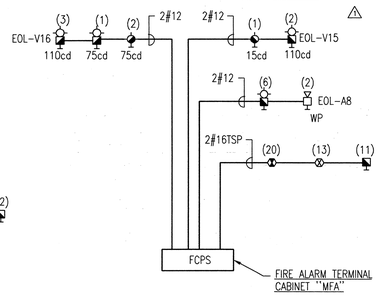

BUILDING M

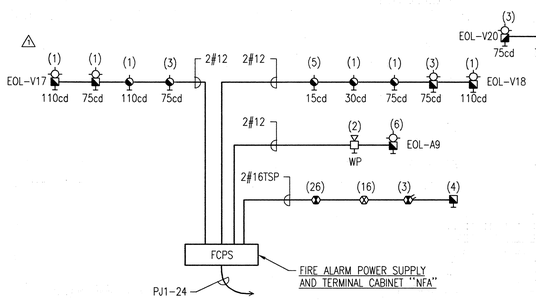

BUILDING N

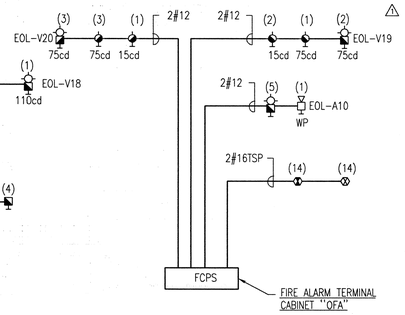

BUILDING O

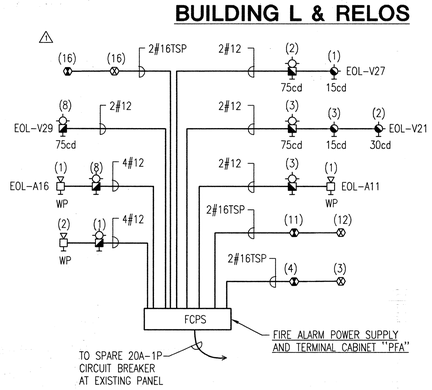

BUILDING P, X & RELOS

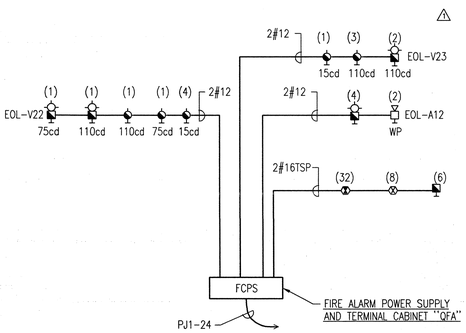

BUILDING Q

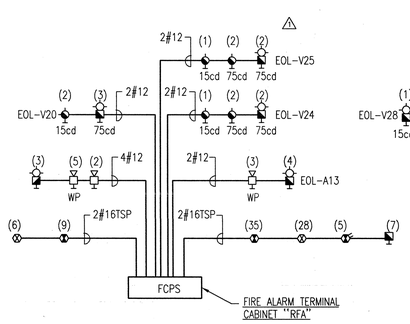

BUILDING R & S

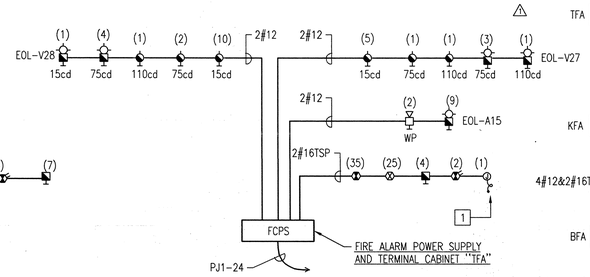

BUILDING T

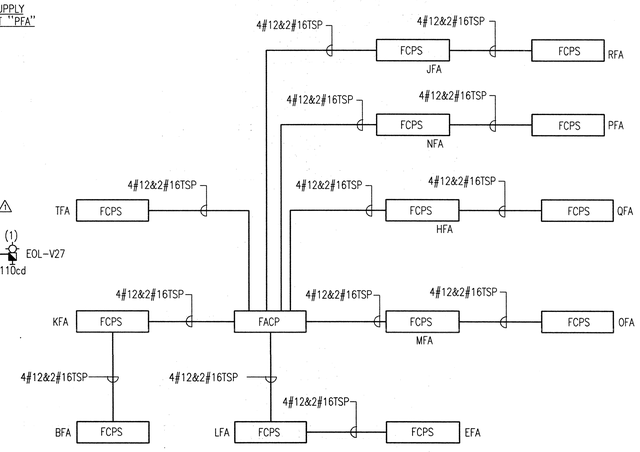

OVERALL RISER DIAGRAM

PLAN NOTES

1. PROVIDE CONNECTION TO HOOD ANSUL SYSTEM AS INDICATED ON E405.

FIRE ALARM SYSTEM COMPLETE PLAN SUBMITTAL

KEY PLAN

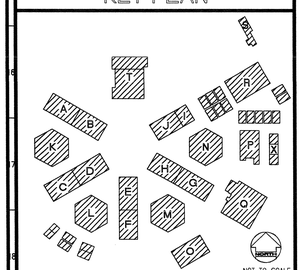

REVISED MAY 12 2004

IDENTIFICATION STAMP
DIV. OF THE STATE ARCHITECT
OFFICE OF REGULATION SERVICES
FILE NO. 19-H51
APPL. NO. 03-106434
AC.___ FLS. NT SS.___
DATE___

Dougherty + Dougherty
Architecture • Planning • Interior Design
3194-D Airport Loop Drive
Costa Mesa, CA 92626
(714) 432-0277

Copyright © 2002 Dougherty + Dougherty

GLP Engineering, Inc.
Mechanical and Electrical Engineers
3185-C Airway Avenue
Costa Mesa, CA 92626-4601
Telephone (714) 751-1851
Fax (714) 751-4216

REGISTERED ARCHITECT STEPHEN CARPENTER JULY 3, 2003 NO. C-8824 STATE OF CALIFORNIA

Architect Seal

REGISTERED PROFESSIONAL ENGINEER GLP No. E 17252 Exp. 6-30-04 ELECTRICAL STATE OF CALIFORNIA

Consultant Seal

LA MIRADA HIGH SCHOOL MODERNIZATION
NORWALK - LA MIRADA UNIFIED SCHOOL DISTRICT
13520 ADELFA DRIVE LA MIRADA, CA 90638

FIRE ALARM RISER DIAGRAMS

Date:	05-11-04
Job:	20237.50
Scale:	NONE
Drawn:	GLPK
Revisions:	
1	12-01-03

E008

P:\Clients\D&G\Norwalk-LaMirada SD\La Mirada HS Modernization 106.045\Drawings\105045e008.dwg May 11, 2004 - 3:25pm

PLAN NOTES

* * * BATTERY SIZING CALCULATION * * *

PROJECT NAME: LA MIRADA HS
PANEL LOCATION: EFA

DEVICE	DEVICE NAME	QTY	STD-BY PER DEVICE (AMPS)	ALARM PER DEVICE(AMPS)	STD-BY (AMPS)	ALARM (AMPS)
POWER EXPANDER		1	0.06000	0.13000	0.06000	0.13000
15 CD STROBE		2	0.00000	0.04300	0.00000	0.08600
30 CD STROBE		0	0.00000	0.06700	0.00000	0.00000
75 CD STROBE		1	0.00000	0.13300	0.00000	0.13300
110 CD STROBE		0	0.00000	0.14000	0.00000	0.00000
15 CD HORN STROBE		0	0.00000	0.08600	0.00000	0.00000
75 CD HORN STROBE		1	0.00000	0.14800	0.00000	1.52400
110 CD HORN STROBE		1	0.00000	0.16500	0.00000	0.16500
HORN(WP)		2	0.00000	0.04100	0.00000	0.08200
SYNC MODULE		2	0.00000	0.01100	0.00000	0.02200
				TOTALS	0.060	2.481

STAND-BY LOAD = 0.060 AMPS
STAND-BY TIME = 60 HRS
STAND-BY = 3.600 Ah (AMP HRS)

ALARM LOAD = 2.481 AMPS
ALARM TIME = 10 / 60 HRS
ALARM = 0.414 Ah (AMP HRS)

TOTAL = STAND-BY + ALARM ---> STAND-BY = 3.600 Ah (AMP HRS); ALARM = 0.414 Ah (AMP HRS); TOTAL = 4.014 Ah (AMP HRS); DERATING FACTOR (x 1.2732)= 5.017 Ah (AMP HRS)

* * * MINIMUM BATTERY SIZE = 5.017 Ah (AMP HRS) * * *

* * * BATTERY SIZING CALCULATION * * *

PROJECT NAME: LA MIRADA HS
PANEL LOCATION: FACP

DEVICE	DEVICE NAME	QTY	STD-BY PER DEVICE (AMPS)	ALARM PER DEVICE(AMPS)	STD-BY (AMPS)	ALARM (AMPS)
CONTROLS		1	0.08000	0.20000	0.08000	0.20000
PULL STATIONS		55	0.00038	0.00038	0.02063	0.02063
SMOKE DETECTORS		302	0.00033	0.00005	0.13904	0.13752
HEAT DETECTORS		286	0.00033	0.00038	0.09438	0.10296
duct DETECTOR		15	0.00033	0.00033	0.00570	0.00570
15 CD STROBE		1	0.00000	0.04300	0.00000	0.04300
75 CD STROBE		10	0.00000	0.13300	0.00000	0.13300
110 CD HORN STROBE		0	0.00000	0.16500	0.00000	0.00000
HORN(WP)		2	0.00000	0.04100	0.00000	0.08200
SYNC MODULE		2	0.00000	0.01100	0.00000	0.02200
				TOTALS	0.430	0.448

STAND-BY LOAD = 0.470 AMPS
STAND-BY TIME = 60 HRS
STAND-BY = 28.222 Ah (AMP HRS)

ALARM LOAD = 2.448 AMPS
ALARM TIME = 10 / 60 HRS
ALARM = 0.408 Ah (AMP HRS)

TOTAL = STAND-BY + ALARM ---> STAND-BY = 28.222 Ah (AMP HRS); ALARM = 0.408 Ah (AMP HRS); TOTAL = 28.630 Ah (AMP HRS); DERATING FACTOR (x 1.2732)= 35.787 Ah (AMP HRS)

* * * MINIMUM BATTERY SIZE = 35.787 Ah (AMP HRS) * * *

* * * BATTERY SIZING CALCULATION * * *

PROJECT NAME: LA MIRADA HS
PANEL LOCATION: HFA

DEVICE	DEVICE NAME	QTY	STD-BY PER DEVICE (AMPS)	ALARM PER DEVICE(AMPS)	STD-BY (AMPS)	ALARM (AMPS)
POWER EXPANDER		1	0.06000	0.13000	0.06000	0.13000
15 CD STROBE		0	0.00000	0.04300	0.00000	0.00000
30 CD STROBE		1	0.00000	0.06700	0.00000	0.06700
75 CD STROBE		1	0.00000	0.13300	0.00000	0.13300
110 CD STROBE		0	0.00000	0.14000	0.00000	0.00000
15 CD HORN STROBE		0	0.00000	0.08600	0.00000	0.00000
75 CD HORN STROBE		1	0.00000	0.14800	0.00000	1.05600
110 CD HORN STROBE		0	0.00000	0.16500	0.00000	0.00000
HORN(WP)		2	0.00000	0.04100	0.00000	0.08200
SYNC MODULE		2	0.00000	0.01100	0.00000	0.02200
				TOTALS	0.060	1.484

STAND-BY LOAD = 0.060 AMPS
STAND-BY TIME = 60 HRS
STAND-BY = 3.600 Ah (AMP HRS)

ALARM LOAD = 2.567 AMPS
ALARM TIME = 10 / 60 HRS
ALARM = 0.428 Ah (AMP HRS)

TOTAL = STAND-BY + ALARM ---> STAND-BY = 3.600 Ah (AMP HRS); ALARM = 0.428 Ah (AMP HRS); TOTAL = 4.028 Ah (AMP HRS); DERATING FACTOR (x 1.2732)= 5.035 Ah (AMP HRS)

* * * MINIMUM BATTERY SIZE = 5.035 Ah (AMP HRS) * * *

* * * BATTERY SIZING CALCULATION * * *

PROJECT NAME: LA MIRADA HS
PANEL LOCATION: JFA

DEVICE	DEVICE NAME	QTY	STD-BY PER DEVICE (AMPS)	ALARM PER DEVICE(AMPS)	STD-BY (AMPS)	ALARM (AMPS)
POWER EXPANDER		1	0.06000	0.13000	0.06000	0.13000
15 CD STROBE		2	0.00000	0.04300	0.00000	0.08600
30 CD STROBE		0	0.00000	0.06700	0.00000	0.00000
110 CD STROBE		0	0.00000	0.14000	0.00000	0.00000
15 CD HORN STROBE		1	0.00000	0.08600	0.00000	0.08600
75 CD HORN STROBE		8	0.00000	0.14800	0.00000	1.18400
110 CD HORN STROBE		1	0.00000	0.16500	0.00000	0.16500
HORN(WP)		2	0.00000	0.04100	0.00000	0.08200
SYNC MODULE		2	0.00000	0.01100	0.00000	0.02200
				TOTALS	0.060	1.884

STAND-BY LOAD = 0.060 AMPS
STAND-BY TIME = 60 HRS
STAND-BY = 3.600 Ah (AMP HRS)

ALARM LOAD = 1.884 AMPS
ALARM TIME = 10 / 60 HRS
ALARM = 0.281 Ah (AMP HRS)

TOTAL = STAND-BY + ALARM ---> STAND-BY = 3.600 Ah (AMP HRS); ALARM = 0.281 Ah (AMP HRS); TOTAL = 3.881 Ah (AMP HRS); DERATING FACTOR (x 1.2732)= 4.851 Ah (AMP HRS)

* * * MINIMUM BATTERY SIZE = 4.851 Ah (AMP HRS) * * *

* * * BATTERY SIZING CALCULATION * * *

PROJECT NAME: LA MIRADA HS
PANEL LOCATION: KFA

DEVICE	DEVICE NAME	QTY	STD-BY PER DEVICE (AMPS)	ALARM PER DEVICE(AMPS)	STD-BY (AMPS)	ALARM (AMPS)
POWER EXPANDER		1	0.06000	0.13000	0.06000	0.13000
15 CD STROBE		5	0.00000	0.04300	0.00000	0.21500
30 CD STROBE		4	0.00000	0.06700	0.00000	0.26800
75 CD STROBE		1	0.00000	0.13300	0.00000	0.13300
110 CD STROBE		0	0.00000	0.14000	0.00000	0.00000
15 CD HORN STROBE		0	0.00000	0.08600	0.00000	0.00000
75 CD HORN STROBE		5	0.00000	0.14800	0.00000	0.74000
110 CD HORN STROBE		5	0.00000	0.16500	0.00000	0.82500
HORN(WP)		2	0.00000	0.04100	0.00000	0.08200
SYNC MODULE		2	0.00000	0.01100	0.00000	0.02200
				TOTALS	0.060	2.586

STAND-BY LOAD = 0.060 AMPS
STAND-BY TIME = 60 HRS
STAND-BY = 3.600 Ah (AMP HRS)

ALARM LOAD = 2.586 AMPS
ALARM TIME = 10 / 60 HRS
ALARM = 0.431 Ah (AMP HRS)

TOTAL = STAND-BY + ALARM ---> STAND-BY = 3.600 Ah (AMP HRS); ALARM = 0.431 Ah (AMP HRS); TOTAL = 4.031 Ah (AMP HRS); DERATING FACTOR (x 1.2732)= 5.134 Ah (AMP HRS)

* * * MINIMUM BATTERY SIZE = 5.134 Ah (AMP HRS) * * *

* * * BATTERY SIZING CALCULATION * * *

PROJECT NAME: LA MIRADA HS
PANEL LOCATION: LFA

DEVICE	DEVICE NAME	QTY	STD-BY PER DEVICE (AMPS)	ALARM PER DEVICE(AMPS)	STD-BY (AMPS)	ALARM (AMPS)
POWER EXPANDER		1	0.06000	0.13000	0.06000	0.13000
15 CD STROBE		16	0.00000	0.04300	0.00000	0.68800
30 CD STROBE		4	0.00000	0.06700	0.00000	0.26800
75 CD STROBE		5	0.00000	0.13300	0.00000	0.66500
110 CD STROBE		0	0.00000	0.14000	0.00000	0.00000
15 CD HORN STROBE		1	0.00000	0.08600	0.00000	0.08600
75 CD HORN STROBE		5	0.00000	0.14800	0.00000	0.74000
110 CD HORN STROBE		1	0.00000	0.16500	0.00000	0.16500
HORN(WP)		2	0.00000	0.04100	0.00000	0.08200
SYNC MODULE		2	0.00000	0.01100	0.00000	0.02200
				TOTALS	0.060	2.514

STAND-BY LOAD = 0.060 AMPS
STAND-BY TIME = 60 HRS
STAND-BY = 3.600 Ah (AMP HRS)

ALARM LOAD = 2.514 AMPS
ALARM TIME = 10 / 60 HRS
ALARM = 0.419 Ah (AMP HRS)

TOTAL = STAND-BY + ALARM ---> STAND-BY = 3.600 Ah (AMP HRS); ALARM = 0.419 Ah (AMP HRS); TOTAL = 4.019 Ah (AMP HRS); DERATING FACTOR (x 1.2732)= 5.024 Ah (AMP HRS)

* * * MINIMUM BATTERY SIZE = 5.024 Ah (AMP HRS) * * *

* * * BATTERY SIZING CALCULATION * * *

PROJECT NAME: LA MIRADA HS
PANEL LOCATION: MFA

DEVICE	DEVICE NAME	QTY	STD-BY PER DEVICE (AMPS)	ALARM PER DEVICE(AMPS)	STD-BY (AMPS)	ALARM (AMPS)
POWER EXPANDER		1	0.06000	0.13000	0.06000	0.13000
15 CD STROBE		0	0.00000	0.04300	0.00000	0.00000
30 CD STROBE		1	0.00000	0.06700	0.00000	0.06700
75 CD STROBE		5	0.00000	0.13300	0.00000	0.66500
110 CD STROBE		0	0.00000	0.14000	0.00000	0.00000
15 CD HORN STROBE		0	0.00000	0.08600	0.00000	0.00000
75 CD HORN STROBE		5	0.00000	0.14800	0.00000	0.74000
110 CD HORN STROBE		2	0.00000	0.16500	0.00000	0.33000
HORN(WP)		2	0.00000	0.04100	0.00000	0.08200
SYNC MODULE		2	0.00000	0.01100	0.00000	0.02200
				TOTALS	0.060	2.086

STAND-BY LOAD = 0.060 AMPS
STAND-BY TIME = 60 HRS
STAND-BY = 3.600 Ah (AMP HRS)

ALARM LOAD = 2.086 AMPS
ALARM TIME = 10 / 60 HRS
ALARM = 0.348 Ah (AMP HRS)

TOTAL = STAND-BY + ALARM ---> STAND-BY = 3.600 Ah (AMP HRS); ALARM = 0.348 Ah (AMP HRS); TOTAL = 3.948 Ah (AMP HRS); DERATING FACTOR (x 1.2732)= 5.026 Ah (AMP HRS)

* * * MINIMUM BATTERY SIZE = 5.026 Ah (AMP HRS) * * *

* * * BATTERY SIZING CALCULATION * * *

PROJECT NAME: LA MIRADA HS
PANEL LOCATION: NFA

DEVICE	DEVICE NAME	QTY	STD-BY PER DEVICE (AMPS)	ALARM PER DEVICE(AMPS)	STD-BY (AMPS)	ALARM (AMPS)
POWER EXPANDER		1	0.06000	0.13000	0.06000	0.13000
15 CD STROBE		5	0.00000	0.04300	0.00000	0.21500
30 CD STROBE		4	0.00000	0.06700	0.00000	0.26800
75 CD STROBE		1	0.00000	0.13300	0.00000	0.13300
110 CD STROBE		0	0.00000	0.14000	0.00000	0.00000
15 CD HORN STROBE		0	0.00000	0.08600	0.00000	0.00000
75 CD HORN STROBE		6	0.00000	0.14800	0.00000	0.88800
110 CD HORN STROBE		2	0.00000	0.16500	0.00000	0.33000
HORN(WP)		2	0.00000	0.04100	0.00000	0.08200
SYNC MODULE		2	0.00000	0.01100	0.00000	0.02200
				TOTALS	0.060	2.532

STAND-BY LOAD = 0.060 AMPS
STAND-BY TIME = 60 HRS
STAND-BY = 3.600 Ah (AMP HRS)

ALARM LOAD = 2.532 AMPS
ALARM TIME = 10 / 60 HRS
ALARM = 0.422 Ah (AMP HRS)

TOTAL = STAND-BY + ALARM ---> STAND-BY = 3.600 Ah (AMP HRS); ALARM = 0.422 Ah (AMP HRS); TOTAL = 4.022 Ah (AMP HRS); DERATING FACTOR (x 1.2732)= 5.026 Ah (AMP HRS)

* * * MINIMUM BATTERY SIZE = 5.026 Ah (AMP HRS) * * *

* * * BATTERY SIZING CALCULATION * * *

PROJECT NAME: LA MIRADA HS
PANEL LOCATION: QFA

DEVICE	DEVICE NAME	QTY	STD-BY PER DEVICE (AMPS)	ALARM PER DEVICE(AMPS)	STD-BY (AMPS)	ALARM (AMPS)
POWER EXPANDER		1	0.06000	0.13000	0.06000	0.13000
15 CD STROBE		5	0.00000	0.04300	0.00000	0.21500
30 CD STROBE		0	0.00000	0.06700	0.00000	0.00000
75 CD STROBE		1	0.00000	0.13300	0.00000	0.13300
110 CD STROBE		4	0.00000	0.14000	0.00000	0.56000
15 CD HORN STROBE		0	0.00000	0.08600	0.00000	0.00000
75 CD HORN STROBE		5	0.00000	0.14800	0.00000	0.74000
110 CD HORN STROBE		2	0.00000	0.16500	0.00000	0.33000
HORN(WP)		2	0.00000	0.04100	0.00000	0.08200
SYNC MODULE		2	0.00000	0.01100	0.00000	0.02200
				TOTALS	0.060	2.765

STAND-BY LOAD = 0.060 AMPS
STAND-BY TIME = 60 HRS
STAND-BY = 3.600 Ah (AMP HRS)

ALARM LOAD = 2.765 AMPS
ALARM TIME = 10 / 60 HRS
ALARM = 0.294 Ah (AMP HRS)

TOTAL = STAND-BY + ALARM ---> STAND-BY = 3.600 Ah (AMP HRS); ALARM = 0.294 Ah (AMP HRS); TOTAL = 3.894 Ah (AMP HRS); DERATING FACTOR (x 1.2732)= 4.868 Ah (AMP HRS)

* * * MINIMUM BATTERY SIZE = 4.868 Ah (AMP HRS) * * *

* * * BATTERY SIZING CALCULATION * * *

PROJECT NAME: LA MIRADA HS
PANEL LOCATION: RFA

DEVICE	DEVICE NAME	QTY	STD-BY PER DEVICE (AMPS)	ALARM PER DEVICE(AMPS)	STD-BY (AMPS)	ALARM (AMPS)
POWER EXPANDER		1	0.06000	0.13000	0.06000	0.13000
15 CD STROBE		5	0.00000	0.04300	0.00000	0.17200
30 CD STROBE		4	0.00000	0.06700	0.00000	0.40200
75 CD STROBE		4	0.00000	0.13300	0.00000	0.40200
110 CD STROBE		0	0.00000	0.14000	0.00000	0.00000
15 CD HORN STROBE		0	0.00000	0.08600	0.00000	0.00000
75 CD HORN STROBE		6	0.00000	0.14800	0.00000	0.88800
110 CD HORN STROBE		2	0.00000	0.16500	0.00000	0.33000
HORN(WP)		2	0.00000	0.04100	0.00000	0.08200
SYNC MODULE		2	0.00000	0.01100	0.00000	0.02200
				TOTALS	0.060	2.595

STAND-BY LOAD = 0.060 AMPS
STAND-BY TIME = 60 HRS
STAND-BY = 3.600 Ah (AMP HRS)

ALARM LOAD = 1.899 AMPS
ALARM TIME = 10 / 60 HRS
ALARM = 0.317 Ah (AMP HRS)

TOTAL = STAND-BY + ALARM ---> STAND-BY = 3.600 Ah (AMP HRS); ALARM = 0.317 Ah (AMP HRS); TOTAL = 3.917 Ah (AMP HRS); DERATING FACTOR (x 1.2732)= 4.896 Ah (AMP HRS)

* * * MINIMUM BATTERY SIZE = 4.896 Ah (AMP HRS) * * *

* * * BATTERY SIZING CALCULATION * * *

PROJECT NAME: LA MIRADA HS
PANEL LOCATION: EFA

DEVICE	DEVICE NAME	QTY	STD-BY PER DEVICE (AMPS)	ALARM PER DEVICE(AMPS)	STD-BY (AMPS)	ALARM (AMPS)
POWER EXPANDER		1	0.06000	0.13000	0.06000	0.13000
15 CD STROBE		3	0.00000	0.04300	0.00000	0.12900
30 CD STROBE		0	0.00000	0.06700	0.00000	0.00000
75 CD STROBE		4	0.00000	0.13300	0.00000	0.53200
110 CD STROBE		0	0.00000	0.14000	0.00000	0.00000
15 CD HORN STROBE		0	0.00000	0.08600	0.00000	0.00000
75 CD HORN STROBE		5	0.00000	0.14800	0.00000	0.74000
110 CD HORN STROBE		0	0.00000	0.16500	0.00000	0.00000
HORN(WP)		2	0.00000	0.04100	0.00000	0.08200
SYNC MODULE		2	0.00000	0.01100	0.00000	0.02200
				TOTALS	0.060	1.544

STAND-BY LOAD = 0.060 AMPS
STAND-BY TIME = 60 HRS
STAND-BY = 3.600 Ah (AMP HRS)

ALARM LOAD = 1.544 AMPS
ALARM TIME = 10 / 60 HRS
ALARM = 0.257 Ah (AMP HRS)

TOTAL = STAND-BY + ALARM ---> STAND-BY = 3.600 Ah (AMP HRS); ALARM = 0.257 Ah (AMP HRS); TOTAL = 3.857 Ah (AMP HRS); DERATING FACTOR (x 1.2732)= 4.822 Ah (AMP HRS)

* * * MINIMUM BATTERY SIZE = 4.822 Ah (AMP HRS) * * *

* * * BATTERY SIZING CALCULATION * * *

PROJECT NAME: LA MIRADA HS
PANEL LOCATION: GFA

DEVICE	DEVICE NAME	QTY	STD-BY PER DEVICE (AMPS)	ALARM PER DEVICE(AMPS)	STD-BY (AMPS)	ALARM (AMPS)
POWER EXPANDER		1	0.06000	0.13000	0.06000	0.13000
15 CD STROBE		3	0.00000	0.04300	0.00000	0.12900
30 CD STROBE		0	0.00000	0.06700	0.00000	0.00000
75 CD STROBE		4	0.00000	0.13300	0.00000	0.53200
110 CD STROBE		0	0.00000	0.14000	0.00000	0.00000
15 CD HORN STROBE		0	0.00000	0.08600	0.00000	0.00000
75 CD HORN STROBE		13	0.00000	0.14800	0.00000	1.92400
110 CD HORN STROBE		0	0.00000	0.16500	0.00000	0.00000
HORN(WP)		2	0.00000	0.04100	0.00000	0.12300
SYNC MODULE		2	0.00000	0.01100	0.00000	0.02200
				TOTALS	0.060	2.532

STAND-BY LOAD = 0.060 AMPS
STAND-BY TIME = 60 HRS
STAND-BY = 3.600 Ah (AMP HRS)

ALARM LOAD = 2.532 AMPS
ALARM TIME = 10 / 60 HRS
ALARM = 0.422 Ah (AMP HRS)

TOTAL = STAND-BY + ALARM ---> STAND-BY = 3.600 Ah (AMP HRS); ALARM = 0.422 Ah (AMP HRS); TOTAL = 4.022 Ah (AMP HRS); DERATING FACTOR (x 1.2732)= 5.026 Ah (AMP HRS)

* * * MINIMUM BATTERY SIZE = 5.026 Ah (AMP HRS) * * *

* * * BATTERY SIZING CALCULATION * * *

PROJECT NAME: LA MIRADA HS
PANEL LOCATION: SFA

DEVICE	DEVICE NAME	QTY	STD-BY PER DEVICE (AMPS)	ALARM PER DEVICE(AMPS)	STD-BY (AMPS)	ALARM (AMPS)
POWER EXPANDER		1	0.06000	0.13000	0.06000	0.13000
15 CD STROBE		13	0.00000	0.04300	0.00000	0.55900
30 CD STROBE		4	0.00000	0.06700	0.00000	0.26800
75 CD STROBE		5	0.00000	0.13300	0.00000	0.66500
110 CD STROBE		0	0.00000	0.14000	0.00000	0.00000
15 CD HORN STROBE		0	0.00000	0.08600	0.00000	0.00000
75 CD HORN STROBE		5	0.00000	0.14800	0.00000	0.74000
110 CD HORN STROBE		0	0.00000	0.16500	0.00000	0.00000
HORN(WP)		2	0.00000	0.04100	0.00000	0.08200
SYNC MODULE		2	0.00000	0.01100	0.00000	0.02200
				TOTALS	0.060	3.080

STAND-BY LOAD = 0.060 AMPS
STAND-BY TIME = 60 HRS
STAND-BY = 3.600 Ah (AMP HRS)

ALARM LOAD = 3.080 AMPS
ALARM TIME = 10 / 60 HRS
ALARM = 0.464 Ah (AMP HRS)

TOTAL = STAND-BY + ALARM ---> STAND-BY = 3.600 Ah (AMP HRS); ALARM = 0.464 Ah (AMP HRS); TOTAL = 4.064 Ah (AMP HRS); DERATING FACTOR (x 1.2732)= 5.080 Ah (AMP HRS)

* * * MINIMUM BATTERY SIZE = 5.080 Ah (AMP HRS) * * *

* * * BATTERY SIZING CALCULATION * * *

PROJECT NAME: LA MIRADA HS
PANEL LOCATION: TFA

DEVICE	DEVICE NAME	QTY	STD-BY PER DEVICE (AMPS)	ALARM PER DEVICE(AMPS)	STD-BY (AMPS)	ALARM (AMPS)
POWER EXPANDER		1	0.06000	0.13000	0.06000	0.13000
15 CD STROBE		3	0.00000	0.04300	0.00000	0.12900
30 CD STROBE		0	0.00000	0.06700	0.00000	0.00000
75 CD STROBE		4	0.00000	0.13300	0.00000	0.53200
110 CD STROBE		0	0.00000	0.14000	0.00000	0.00000
15 CD HORN STROBE		0	0.00000	0.08600	0.00000	0.00000
75 CD HORN STROBE		14	0.00000	0.14800	0.00000	2.07200
110 CD HORN STROBE		0	0.00000	0.16500	0.00000	0.00000
HORN(WP)		2	0.00000	0.04100	0.00000	0.08200
SYNC MODULE		2	0.00000	0.01100	0.00000	0.02200
				TOTALS	0.060	3.060

STAND-BY LOAD = 0.060 AMPS
STAND-BY TIME = 60 HRS
STAND-BY = 3.600 Ah (AMP HRS)

ALARM LOAD = 3.060 AMPS
ALARM TIME = 10 / 60 HRS
ALARM = 0.443 Ah (AMP HRS)

TOTAL = STAND-BY + ALARM ---> STAND-BY = 3.600 Ah (AMP HRS); ALARM = 0.443 Ah (AMP HRS); TOTAL = 4.043 Ah (AMP HRS); DERATING FACTOR (x 1.2732)= 5.150 Ah (AMP HRS)

* * * MINIMUM BATTERY SIZE = 5.150 Ah (AMP HRS) * * *

* * * VOLTAGE DROP CALCULATIONS * * *

PROJECT NAME: EFA
PANEL NAME: LA MIRADA HS

SIGNAL CIRCUIT

DEVICE	DEVICE CURRENT (AMPS)	AUDIBLE A1 QTY	AUDIBLE A1 CURR	VISUAL V1 QTY	VISUAL V1 CURR	VISUAL V2 QTY	VISUAL V2 CURR	SPARE QTY	SPARE CURR
15CD STROBE	0.043	0	0.000	7	0.300	0	0.129	0	0.000
30CD STROBE	0.067	0	0.000	0	0.000	0	0.000	0	0.000
75CD STROBE	0.133	0	0.000	4	0.532	0	0.000	0	0.000
110CD STROBE	0.140	0	0.000	0	0.000	0	0.000	0	0.000
HORN/STROBE	0.025	6	0.150	5	0.125	0	0.000	0	0.000
HORN(WP)	0.041	2	0.082	0	0.000	0	0.000	0	0.000
TOTAL CURRENT ON CIRCUIT		0.457 AMPS		1.317 AMPS		1.115 AMPS		0 AMPS	
TOTAL WIRE LENGTH		850 FT		375 FT		425 FT		0 FT	
% VOLTAGE DROP		5.354 %		5.530 %		6.519 %		0.000 %	
WIRE SIZE		12 AWG		12 AWG		12 AWG		12 AWG	
CIRCUIT LOCATION		BLDG. A-B		BLDG. A-B		BLDG. A-B			

CIRC. MILLS
18 AWG=1620
16 AWG=2580
14 AWG=4110
12 AWG=6530

VOLTAGE DROP = DISTANCE x TOTAL CURR. x 21.6 / CIRCULAR MILS
% VOLTAGE DROP = VOLTAGE DROP x 100 / 24 VOLTS

* * * VOLTAGE DROP CALCULATIONS * * *

PROJECT NAME: ETA
PANEL NAME: LA MIRADA HS

SIGNAL CIRCUIT

DEVICE	DEVICE CURRENT (AMPS)	AUDIBLE A3 QTY	AUDIBLE A3 CURR	VISUAL V3 QTY	VISUAL V3 CURR	VISUAL V4 QTY	VISUAL V4 CURR	SPARE QTY	SPARE CURR
15CD STROBE	0.043	0	0.000	7	0.300	0	0.129	0	0.000
30CD STROBE	0.067	0	0.000	0	0.000	0	0.000	0	0.000
75CD STROBE	0.133	0	0.000	4	0.532	0	0.000	0	0.000
110CD STROBE	0.140	0	0.000	0	0.000	0	0.000	0	0.000
HORN/STROBE	0.025	6	0.150	5	0.125	0	0.000	0	0.000
HORN(WP)	0.041	2	0.082	0	0.000	0	0.000	0	0.000
TOTAL CURRENT ON CIRCUIT		0.457 AMPS		1.317 AMPS		1.115 AMPS		0 AMPS	
TOTAL WIRE LENGTH		850 FT		375 FT		425 FT		0 FT	
% VOLTAGE DROP		5.354 %		5.530 %		6.519 %		0.000 %	
WIRE SIZE		12 AWG		12 AWG		12 AWG		12 AWG	
CIRCUIT LOCATION		BLDG. A-B		BLDG. A-B		BLDG. A-B			

CIRC. MILLS
18 AWG=1620
16 AWG=2580
14 AWG=4110
12 AWG=6530

VOLTAGE DROP = DISTANCE x TOTAL CURR. x 21.6 / CIRCULAR MILS
% VOLTAGE DROP = VOLTAGE DROP x 100 / 24 VOLTS

* * * VOLTAGE DROP CALCULATIONS * * *

PROJECT NAME: FACP
PANEL NAME: LA MIRADA HS

SIGNAL CIRCUIT

DEVICE	DEVICE CURRENT (AMPS)	AUDIBLE A2 QTY	AUDIBLE A2 CURR	VISUAL V5 QTY	VISUAL V5 CURR	VISUAL V6 QTY	VISUAL V6 CURR	SPARE QTY	SPARE CURR
15CD STROBE	0.043	0	0.000	5	0.043	0	0.000	0	0.000
30CD STROBE	0.067	0	0.000	0	0.000	0	0.000	0	0.000
75CD STROBE	0.133	0	0.000	0	0.615	0	0.615	0	0.000
110CD STROBE	0.140	0	0.000	0	0.000	0	0.000	0	0.000
HORN/STROBE	0.025	11	0.275	0	0.000	0	0.000	0	0.000
HORN(WP)	0.041	2	0.082	0	0.000	0	0.000	0	0.000
TOTAL CURRENT ON CIRCUIT		0.357 AMPS		0.658 AMPS		0.615 AMPS		0 AMPS	
TOTAL WIRE LENGTH		850 FT		300 FT		275 FT		0 FT	
% VOLTAGE DROP		3.188 %		4.520 %		2.483 %		0.000 %	
WIRE SIZE		12 AWG		12 AWG		12 AWG		12 AWG	
CIRCUIT LOCATION		BLDG. C-D		BLDG. C-D		BLDG. C-D			

CIRC. MILLS
18 AWG=1620
16 AWG=2580
14 AWG=4110
12 AWG=6530

VOLTAGE DROP = DISTANCE x TOTAL CURR. x 21.6 / CIRCULAR MILS
% VOLTAGE DROP = VOLTAGE DROP x 100 / 24 VOLTS

* * * VOLTAGE DROP CALCULATIONS * * *

PROJECT NAME: HFA
PANEL NAME: LA MIRADA HS

SIGNAL CIRCUIT

DEVICE	DEVICE CURRENT (AMPS)	AUDIBLE A4 QTY	AUDIBLE A4 CURR	VISUAL V7 QTY	VISUAL V7 CURR	VISUAL V8 QTY	VISUAL V8 CURR	SPARE QTY	SPARE CURR
15CD STROBE	0.043	0	0.000	0	0.000	0	0.000	0	0.000
30CD STROBE	0.067	0	0.000	0	0.000	0	0.000	0	0.000
75CD STROBE	0.133	0	0.000	8	0.665	0	0.000	0	0.000
110CD STROBE	0.140	0	0.000	0	0.000	0	0.000	0	0.000

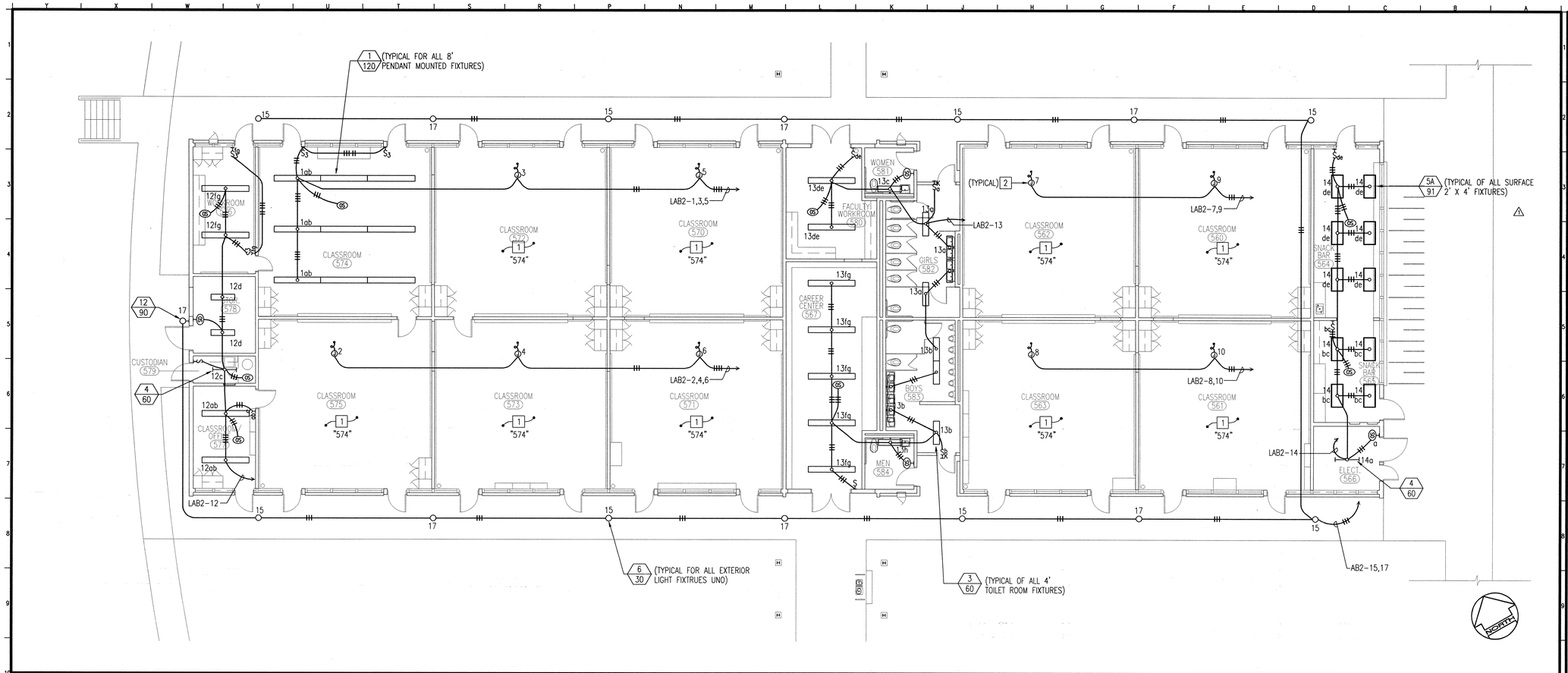

BUILDING A-B LIGHTING PLAN

550 BUILDING

A10

1/8"=1'-0"

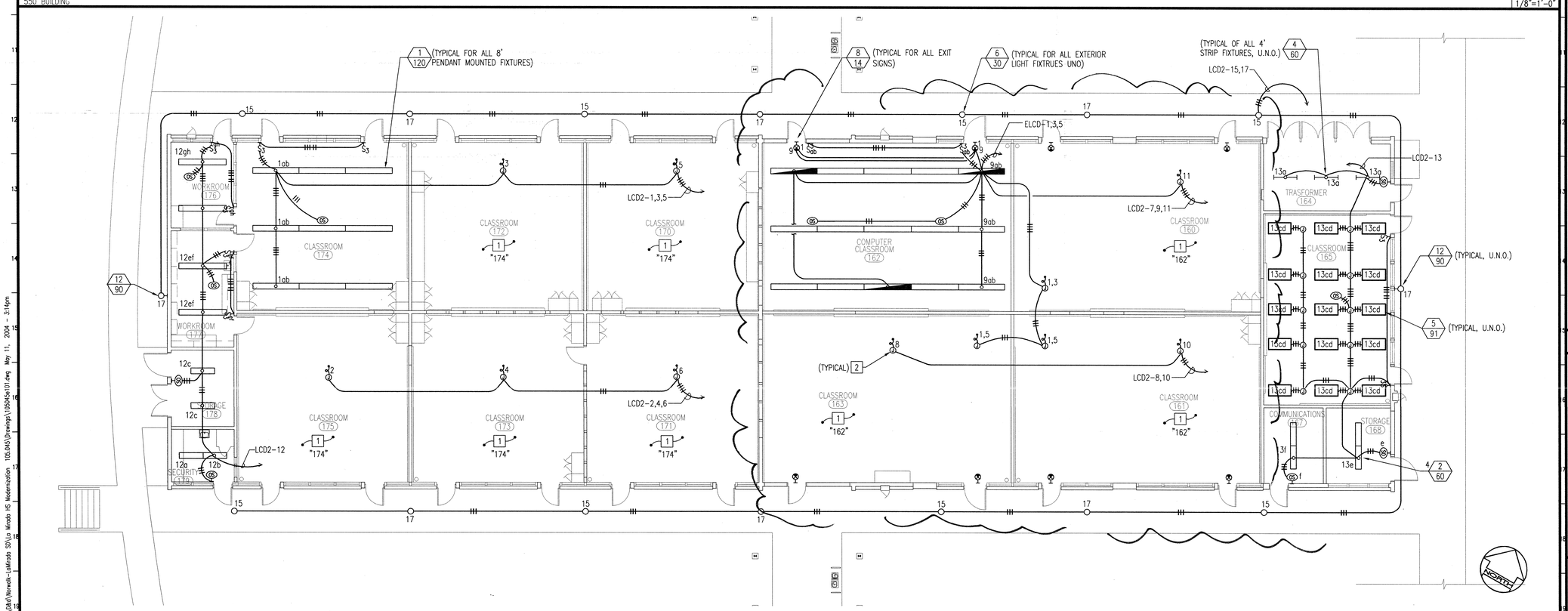

BUILDING C-D LIGHTING PLAN

150 BUILDING

A19

1/8"=1'-0"

PLAN NOTES

1. PROVIDE LIGHTING PER TYPICAL CLASSROOM INDICATED, INCLUDING LIGHT FIXTURES, SWITCHES, OCCUPANCY SENSORS, JUNCTION BOXES, CONDUIT, BRANCH CIRCUIT WIRING AND CONNECTIONS AS REQUIRED FOR A COMPLETE AND OPERABLE SYSTEM.
2. LIGHTING SYSTEM JUNCTION BOX. ADJACENT NUMBER INDICATED BRANCH CIRCUIT FOR ROOM.

KEY PLAN

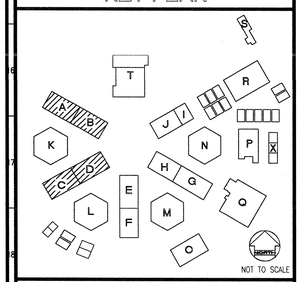

REVISED MAY 12 2004

IDENTIFICATION STAMP
DIV. OF THE STATE ARCHITECT
OFFICE OF REGULATION SERVICES
FILE NO. 19-H51
APPL. NO. 03-106434
AC.____ FLS. NLT SS.____
DATE____

Dougherty ■■ Dougherty
Architecture • Planning • Interior Design
3194-D Airport Loop Drive
Costa Mesa, CA 92626
(714) 432-0277

Copyright © 2002 Dougherty + Dougherty

GLP Engineering, Inc.
Mechanical • Electrical • Plumbing • Fire Protection
3185-C Airway Avenue
Costa Mesa, CA 92626-4610
Telephone (714) 751-1851
Fax (714) 751-4216

Architect Seal

Consultant Seal

LA MIRADA HIGH SCHOOL
MODERNIZATION
NORWALK - LA MIRADA UNIFIED SCHOOL DISTRICT
13520 ADELFA DRIVE LA MIRADA, CA 90638

CLASSROOM BUILDINGS A-B & C-D LIGHTING PLANS

Date:	05-11-04
Job:	20237.50
Scale:	AS NOTED
Drawn:	
Revisions:	
1	12-01-03

E101

P:\Clients\Dod\Norwalk-LaMirada SD\La Mirada HS Modernization 105.045\Drawings\105045-101.dwg May 11, 2004 - 3:14pm

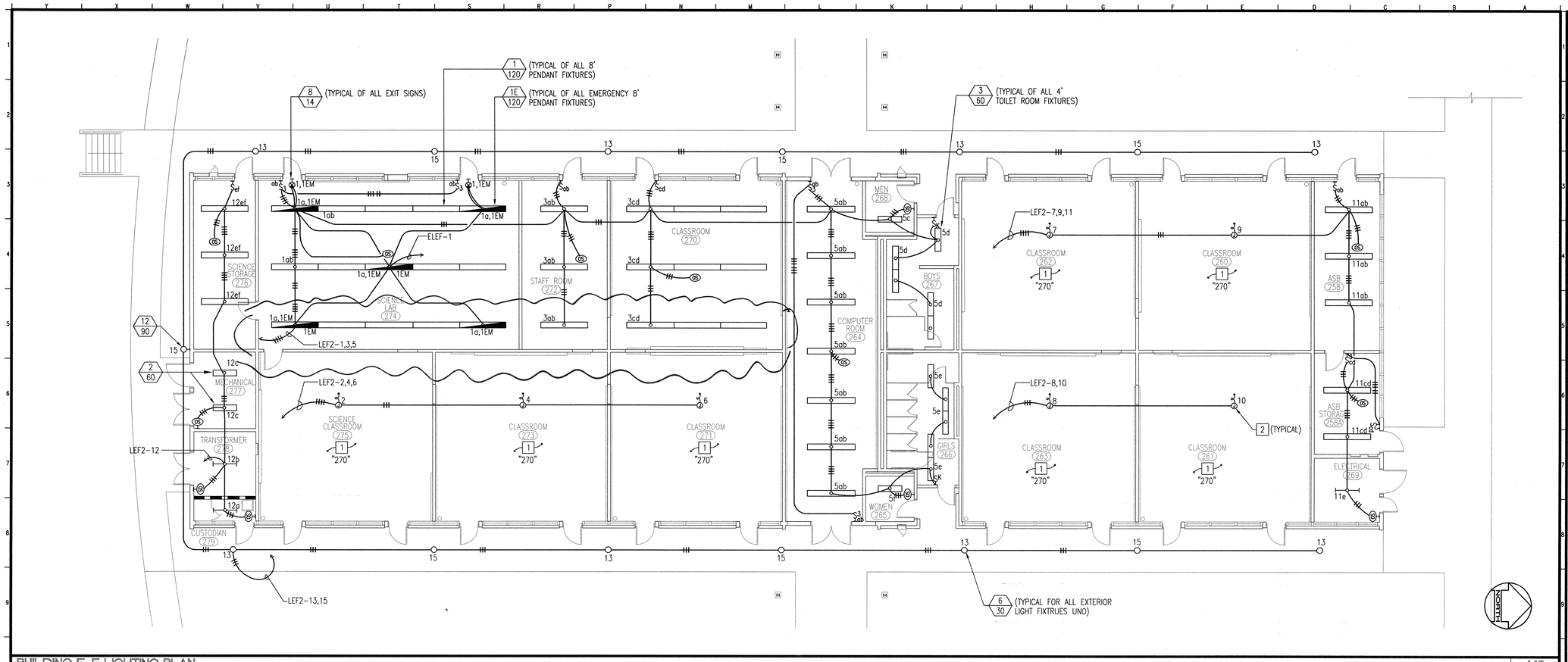

BUILDING E-F LIGHTING PLAN — A10

250 BUILDING — 1/8"=1'-0"

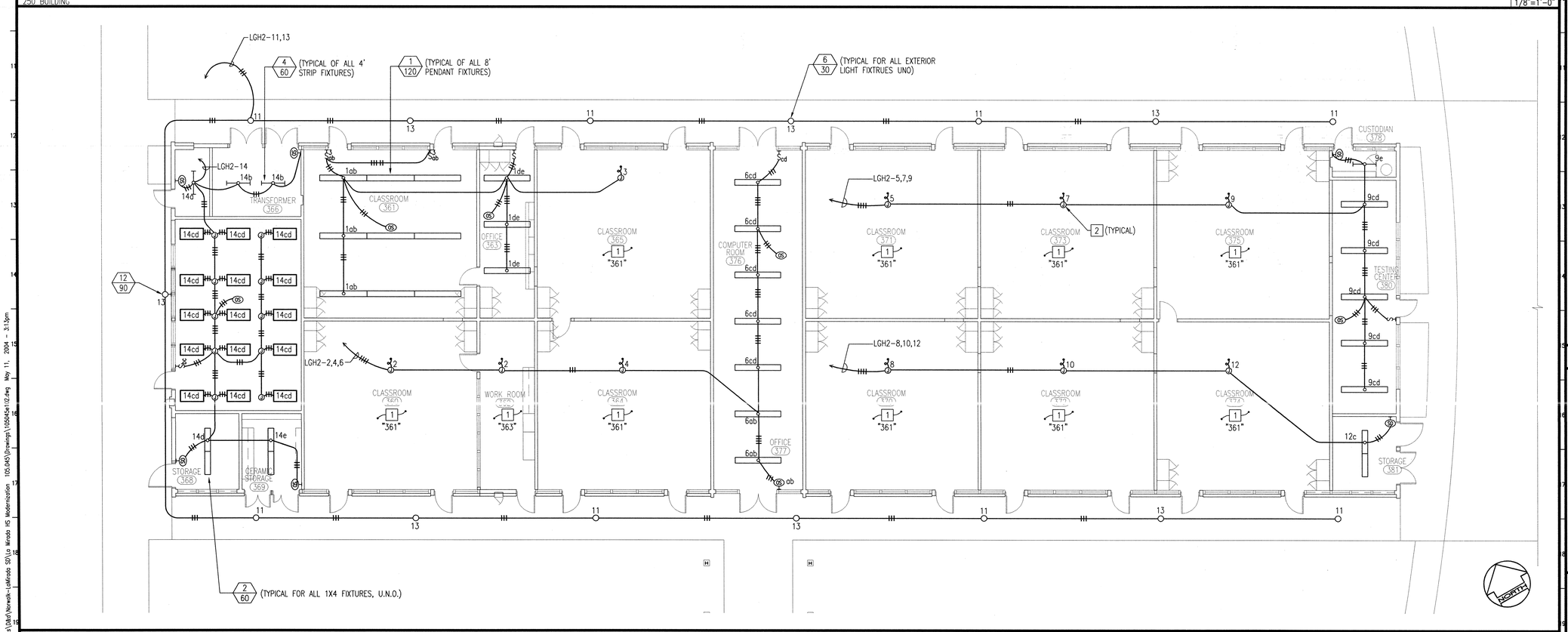

BUILDING G-H LIGHTING PLAN — A19

350 BUILDING — 1/8"=1'-0"

PLAN NOTES

1. PROVIDE LIGHTING PER TYPICAL CLASSROOM INDICATED, INCLUDING LIGHT FIXTURES, SWITCHES, OCCUPANCY SENSORS, JUNCTION BOXES, CONDUIT, BRANCH CIRCUIT WIRING AND CONNECTIONS AS REQUIRED FOR A COMPLETE AND OPERABLE SYSTEM.
2. LIGHTING SYSTEM JUNCTION BOX. ADJACENT NUMBER INDICATED BRANCH CIRCUIT FOR ROOM.

KEY PLAN

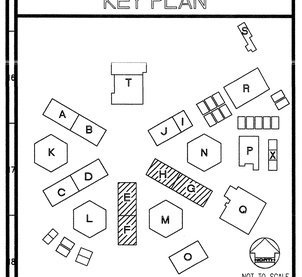

REVISED MAY 12 2004

IDENTIFICATION STAMP
DIV. OF THE STATE ARCHITECT
OFFICE OF REGULATION SERVICES
FILE NO. 19-H51
APPL. NO. 03-106434
AC____ FLS. NLT SS____
DATE____

Dougherty + Dougherty
Architecture • Planning • Interior Design
3194-D Airport Loop Drive
Costa Mesa, CA 92626
(714) 437-0277

Copyright © 2002 Dougherty + Dougherty

GLP Engineering, Inc.
Mechanical and Electrical Engineers
3185-C Airway Avenue
Costa Mesa, CA 92626-4601
Telephone (714) 751-1851
Fax (714) 751-4216

REGISTERED ARCHITECT — No. C-9824 — STATE OF CALIFORNIA — Architect Seal

REGISTERED PROFESSIONAL ENGINEER — No. E 17252 — Exp. 6-30-04 — ELECTRICAL — STATE OF CALIFORNIA — Consultant Seal

LA MIRADA HIGH SCHOOL MODERNIZATION

NORWALK - LA MIRADA UNIFIED SCHOOL DISTRICT
13520 ADELFA DRIVE LA MIRADA, CA 90638

CLASSROOM BUILDINGS E-F & G-H LIGHTING PLANS

Date:	05-11-04
Job:	20237.50
Scale:	AS NOTED
Drawn:	
Revisions:	

E102

P:\Clients\Dist\Norwalk-LaMirada SD\La Mirada HS Modernization 105\045\Drawings\105045e102.dwg May 11, 2004 - 3:13pm

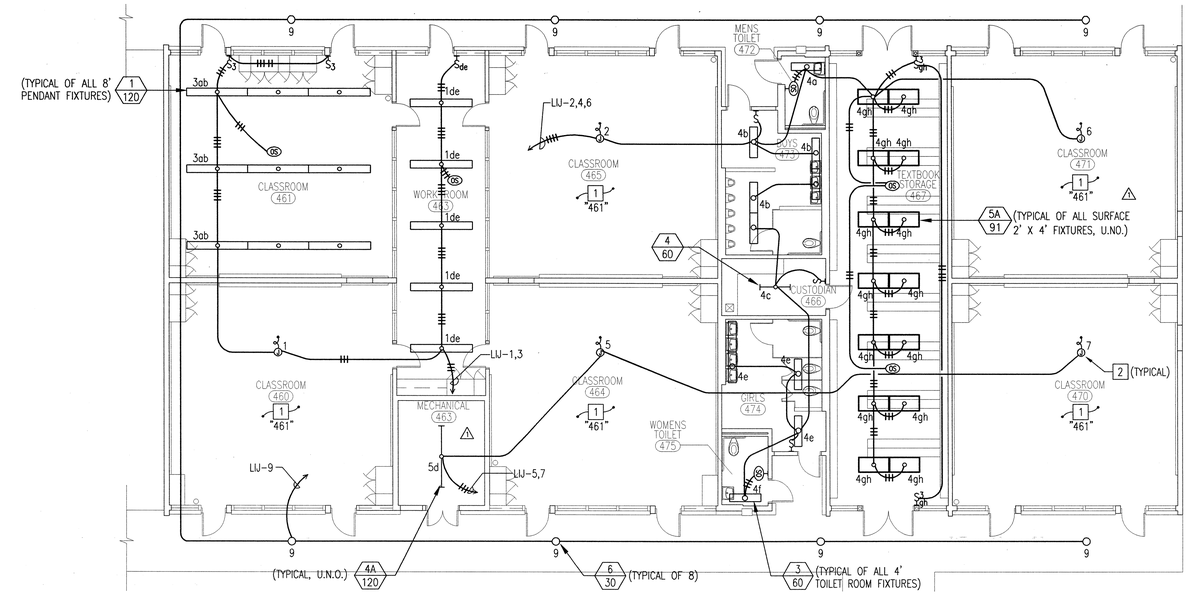

BUILDING I-J LIGHTING PLAN

150 BUILDING

A10

1/8"=1'-0"

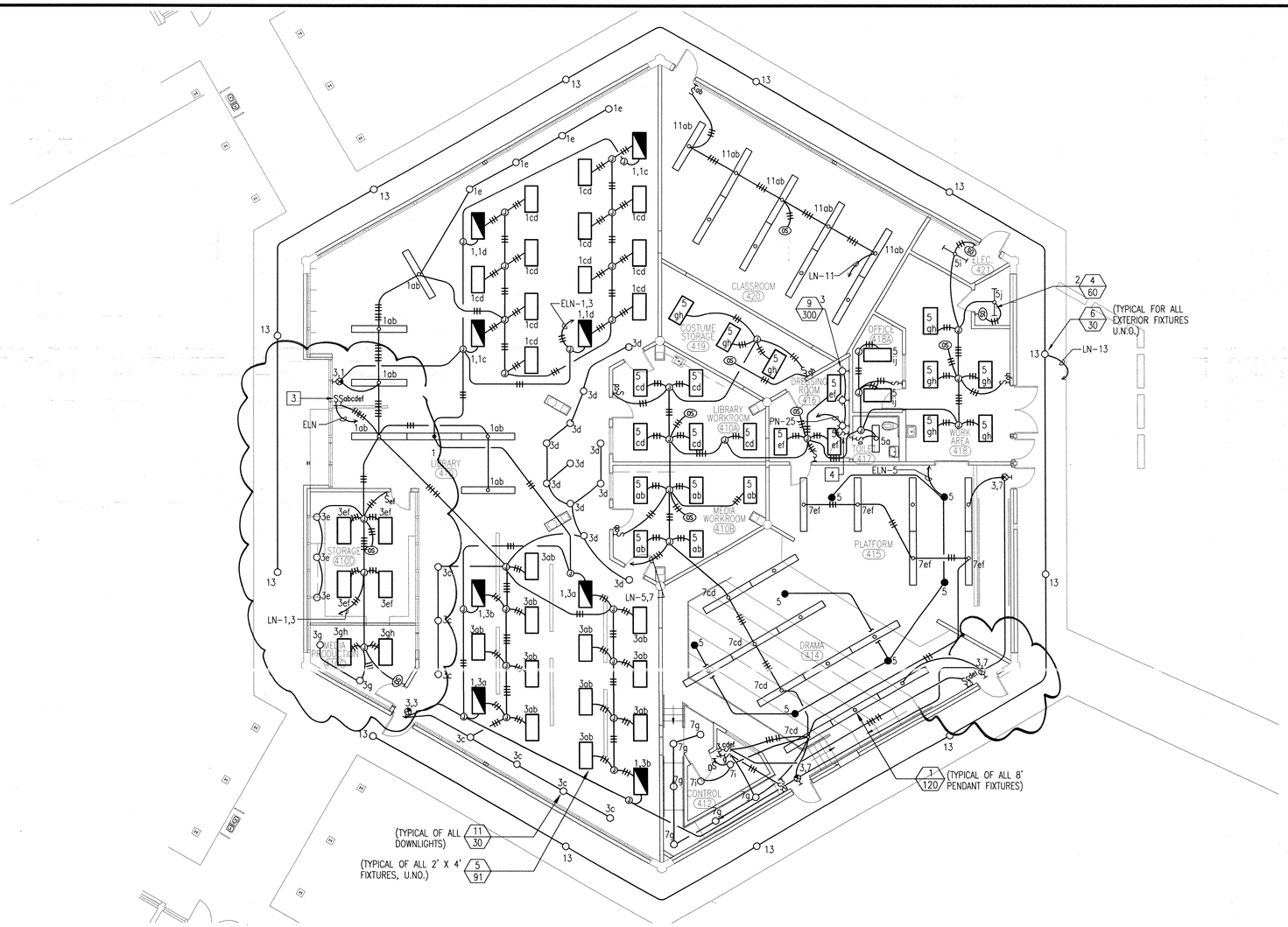

BUILDING N LIGHTING PLAN

LIBRARY/DRAMA BUILDING

A19

1/8"=1'-0"

PLAN NOTES

1. PROVIDE LIGHTING PER TYPICAL CLASSROOM INDICATED, INCLUDING LIGHT FIXTURES, SWITCHES, OCCUPANCY SENSORS, JUNCTION BOXES, CONDUIT, BRANCH CIRCUIT WIRING AND CONNECTIONS AS REQUIRED FOR A COMPLETE AND OPERABLE SYSTEM.
2. LIGHTING SYSTEM JUNCTION BOX. ADJACENT NUMBER INDICATED BRANCH CIRCUIT FOR ROOM.
3. PROVIDE SWITCH FOR CONTROL OF EMERGENCY LIGHTING.
4. MOUNT SWITCH ADJACENT TO VANITY LIGHTS ABOVE COUNTER. VERIFY EXACT MOUNTING HEIGHT WITH ARCHITECT.

KEY PLAN

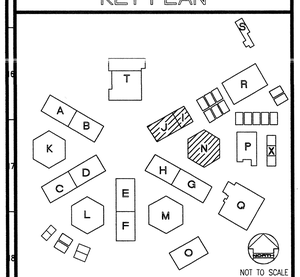

REVISED

IDENTIFICATION STAMP
DIV. OF THE STATE ARCHITECT
OFFICE OF REGULATION SERVICES

FILE NO. 19-H51
APPL. NO. 03-106434

AC ____ FLS ____ SS ____
DATE ____

MAY 12 2004

Dougherty ■ Dougherty
Architecture • Planning • Interior Design
3194-D Airport Loop Drive
Costa Mesa, CA 92626
(714) 662-5027

Copyright © 2002 Dougherty + Dougherty

GLP Engineering, Inc.
Mechanical and Electrical Engineers
3185-C Airway Avenue
Costa Mesa, CA 92626-4601
Telephone (714) 751-1851
Fax (714) 751-4216

REGISTERED ARCHITECT CALIFORNIA DOUGHERTY NO. C-8824 STATE OF CALIFORNIA
Architect Seal

REGISTERED PROFESSIONAL ENGINEER CALIFORNIA GLP ENGINEERING No. E 17252 Exp. 6-30-04 STATE OF CALIFORNIA
Consultant Seal

LA MIRADA HIGH SCHOOL
MODERNIZATION
NORWALK - LA MIRADA UNIFIED SCHOOL DISTRICT
13520 ADELFA DRIVE LA MIRADA, CA 90638

CLASSROOM
BUILDINGS I-J & N
LIGHTING PLANS

Date:	05-11-04
Job:	20237.50
Scale:	AS NOTED
Drawn:	
Revisions:	
1	12-01-03

E103

P:\Clients\Dough\Norwalk-LaMirada SD\La Mirada HS Modernization 105.043\Drawings\105045x13.dwg May 11, 2004 - 3:13pm

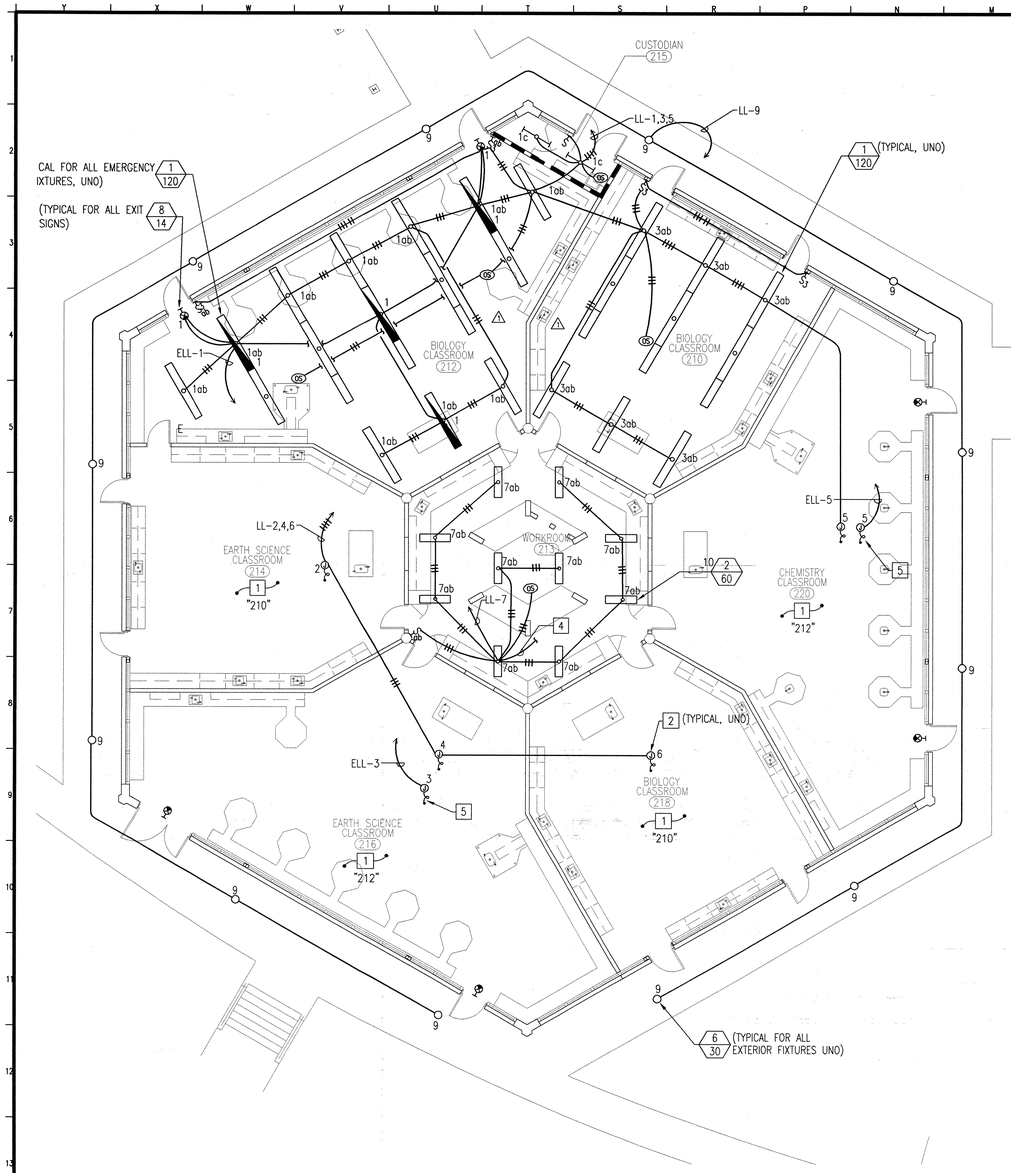

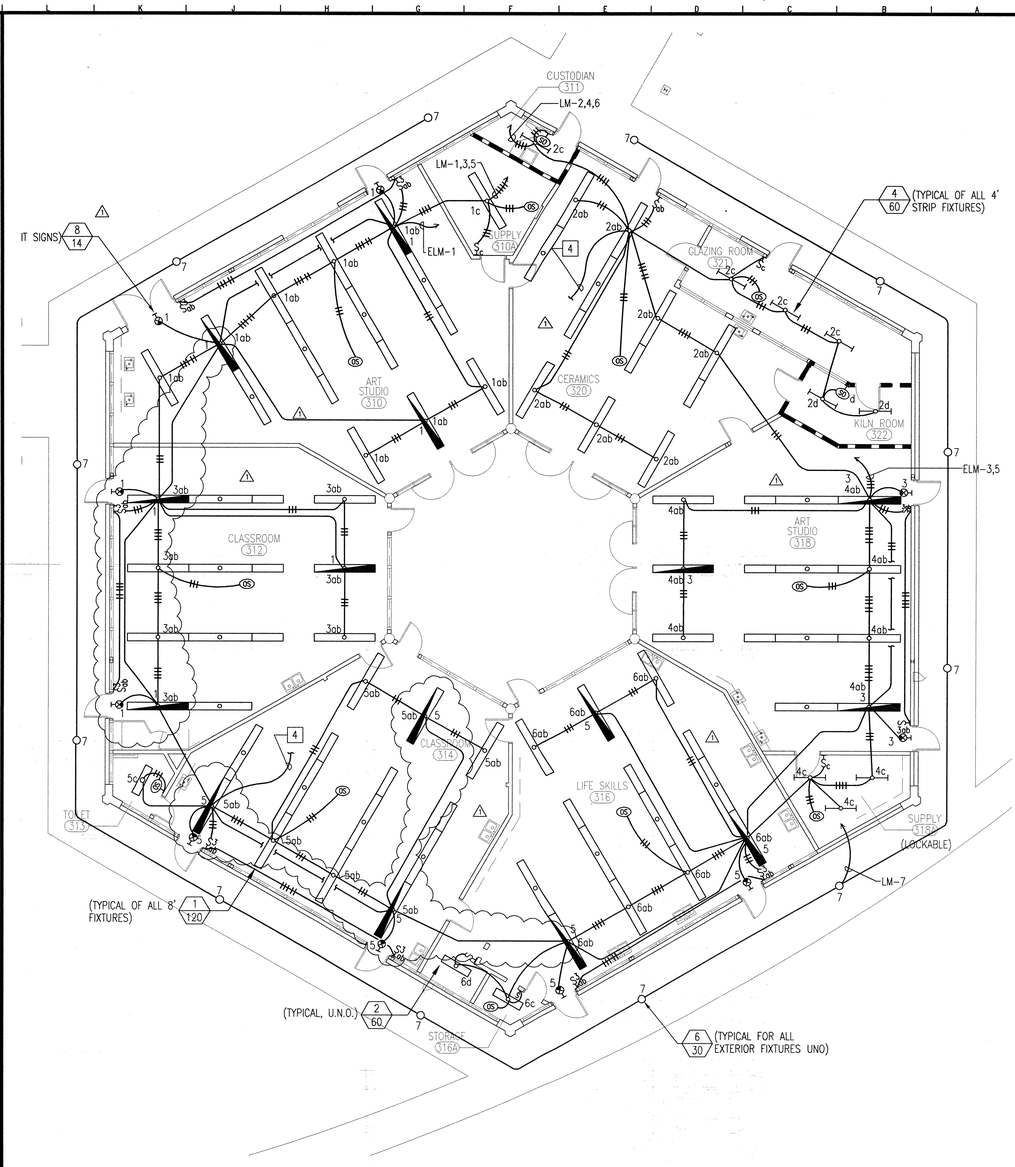

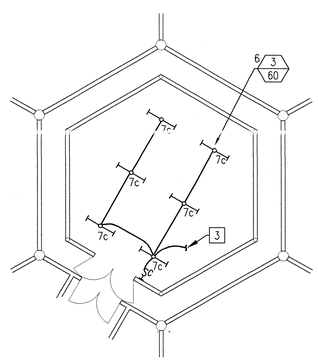

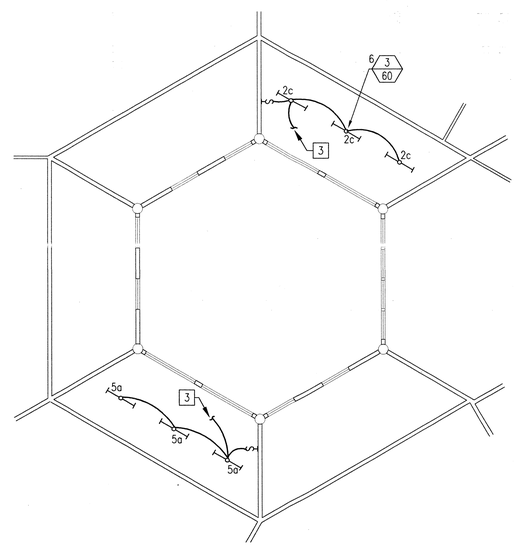

NORTH

BUILDING L LIGHTING PLAN

200 BUILDING

M19

1/8"=1'-0"

BUILDING M LIGHTING PLAN

300 BUILDING

A19

1/8"=1'-0"

PLAN NOTES

1. PROVIDE LIGHTING PER TYPICAL CLASSROOM INDICATED, INCLUDING LIGHT FIXTURES, EXIT SIGNS, SWITCHES, OCCUPANCY SENSORS, JUNCTION BOXES, CONDUIT, BRANCH CIRCUIT WIRING AND CONNECTIONS AS REQUIRED FOR A COMPLETE AND OPERABLE SYSTEM.
2. LIGHTING SYSTEM JUNCTION BOX. ADJACENT NUMBER INDICATED BRANCH CIRCUIT FOR ROOM.
3. DOWN TO FIXTURES BELOW.
4. UP TO FIXTURES ABOVE.
5. EMERGENCY LIGHTING SYSTEM JUNCTION BOX. ADJACENT NUMBER INDICATED BRANCH CIRCUIT FOR ROOM.

KEY PLAN

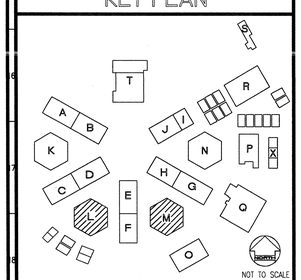

REVISED AS OF MAY 12 2004

IDENTIFICATION STAMP
DIV. OF THE STATE ARCHITECT
OFFICE OF REGULATION SERVICES
FILE NO. 19-H51
APPL. NO. 03-106434
AC.____ FLS. N/C SS.____
DATE ____

Dougherty
Dougherty ■ Dougherty
Architecture • Planning • Interior Design
3194-D Airport Loop Drive
Costa Mesa, CA 92626
(714) 427-1217

Copyright © 2002 Dougherty + Dougherty

GLP Engineering, Inc.
Mechanical and Electrical Engineers
3185-C Airway Avenue
Costa Mesa, CA 92626-4601
Telephone (714) 751-1851
Fax (714) 751-9218

Architect Seal

Consultant Seal

LA MIRADA HIGH SCHOOL
MODERNIZATION
NORWALK - LA MIRADA UNIFIED SCHOOL DISTRICT
13520 ADELFA DRIVE LA MIRADA, CA 90638

CLASSROOM BUILDINGS L & M
LIGHTING PLANS

Date:	05-11-04
Job:	20237.50
Scale:	AS NOTED
Drawn:	
Revisions:	
1	12-01-03

E104

P:\Clients\Dist\Norwalk-LaMirada SD\La Mirada HS Modernization 105.045\Drawings\105045e101.dwg May 11, 2004 - 3:13pm

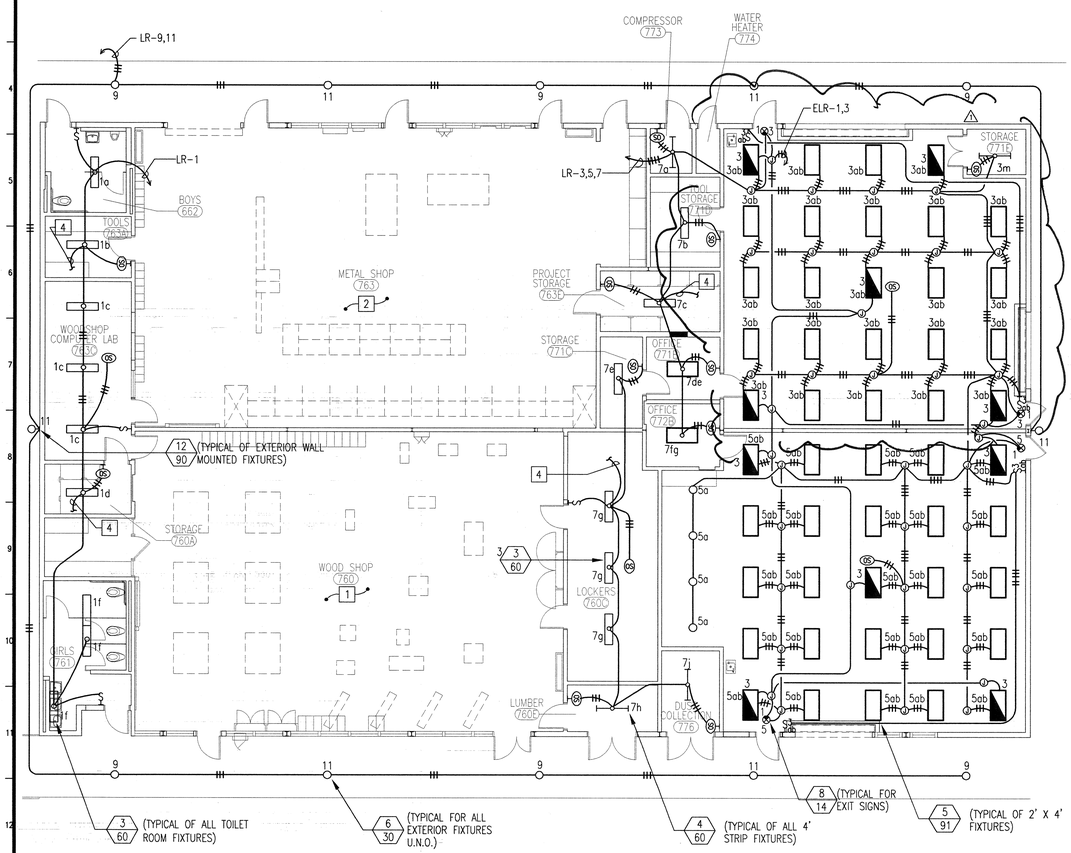

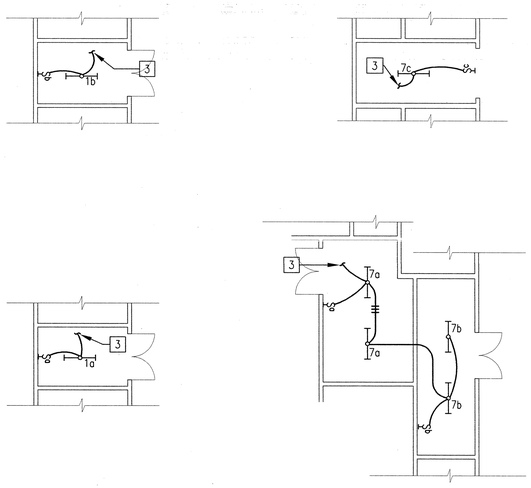

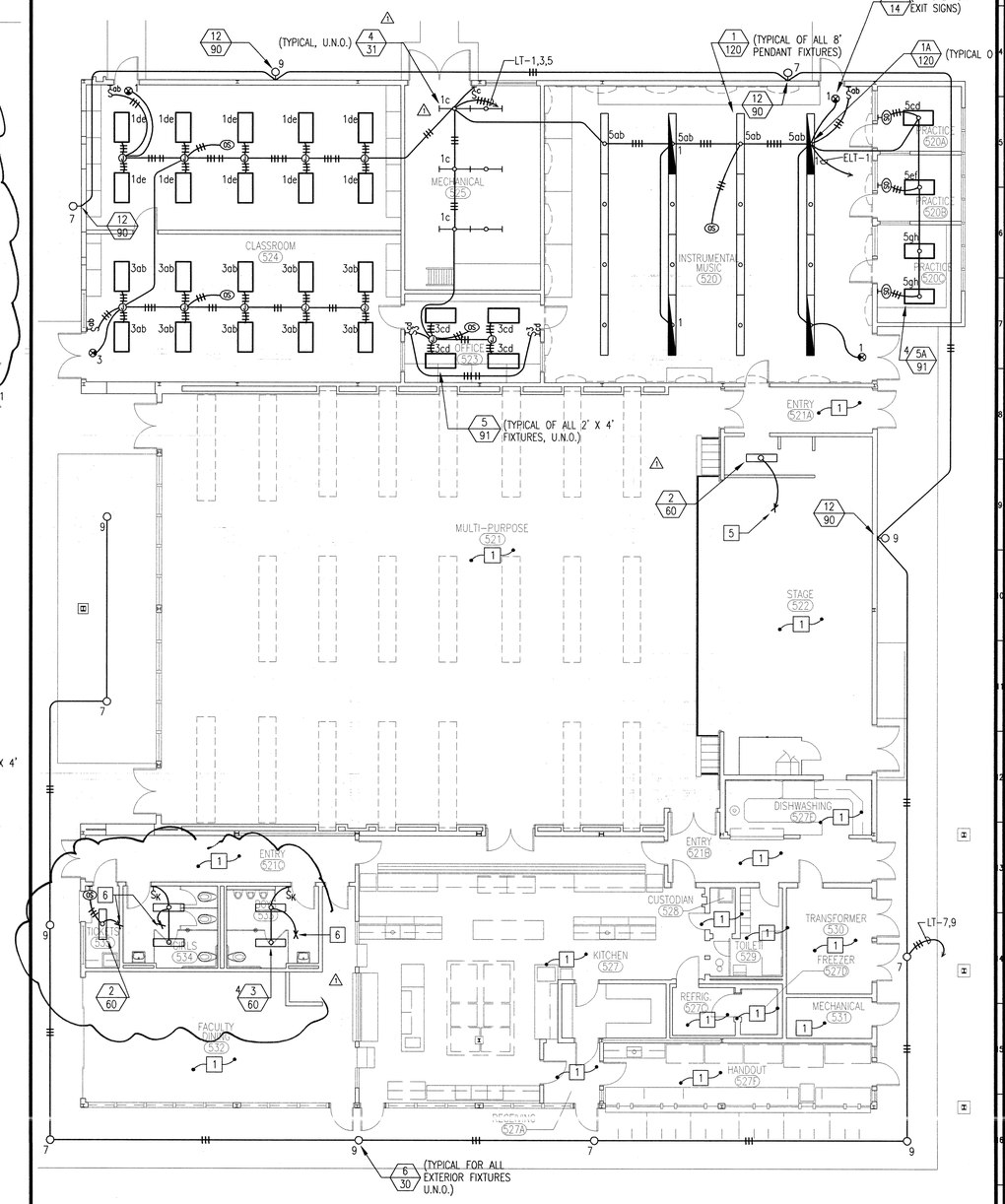

PLAN NOTES

1. EXISTING LIGHTING SHALL BE PROTECTED IN PLACE.
2. EXISTING LIGHTING TO REMAIN. DISCONNECT AND REMOVE EXISTING BALLASTS AND LAMPS. PROVIDE NEW METAL HALIDE LAMPS EQUAL TO THE WATTAGE OF THE LAMPS REMOVED, AND NEW METAL HALIDE BALLASTS.
3. DOWN TO FIXTURES BELOW.
4. UP TO FIXTURES ABOVE.
5. INTERCEPT EXISTING STAGE "HOUSE LIGHTS" SWITCHLEG, AND EXTEND AS INDICATED TO NEW FIXTURE. PROVIDE ALL CONDUIT, WIRING, AND CONNECTIONS REQUIRED FOR A COMPLETE AND OPERABLE SYSTEM.
6. INTERCEPT UNSWITCHED HOT, AND EXTEND AS INDICATED TO NEW FIXTURE(S). PROVIDE ALL CONTROLS, CONDUIT, WIRING, AND CONNECTIONS REQUIRED FOR A COMPLETE AND OPERABLE SYSTEM.

KEY PLAN

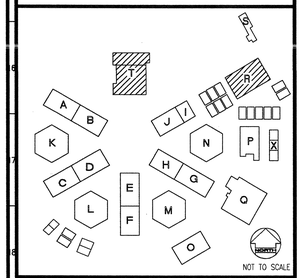

REVISED
MAY 12 2004

IDENTIFICATION STAMP
DIV. OF THE STATE ARCHITECT
OFFICE OF REGULATION SERVICES
FILE NO. 19-H51
APPL. NO. 03-106434
AC ___ FLS NLT SS ___
DATE ___

Dougherty + Dougherty
Architecture • Planning • Interior Design
3194-D Airport Loop Drive
Costa Mesa, CA 92626
(714) 425-0200
(714) 021-7271

Copyright © 2002 Dougherty + Dougherty

GLP Engineering, Inc.
Mechanical and Electrical Engineers
13185-C Airway Avenue
Costa Mesa, CA 92626
Telephone (714) 751-1851
Fax (714) 751-4216

Architect Seal

Consultant Seal

LA MIRADA HIGH SCHOOL MODERNIZATION
NORWALK - LA MIRADA UNIFIED SCHOOL DISTRICT
13520 ADELFA DRIVE LA MIRADA, CA 90638

BUILDINGS R & T LIGHTING PLANS

Date:	05-11-04
Job:	20237.50
Scale:	AS NOTED
Drawn:	
Revisions:	
1	12-01-03

E105

BUILDING R LIGHTING PLAN — L19
SHOP BUILDING — 1/8"=1'-0"

BUILDING T LIGHTING PLAN — A19
MULTI-PURPOSE BUILDING — 1/8"=1'-0"

P:\Clients\Dated\Norwalk-LaMirada SD\La Mirada HS Modernization 105.045\Drawings\105045e101.dwg May 11, 2004 - 3:13pm

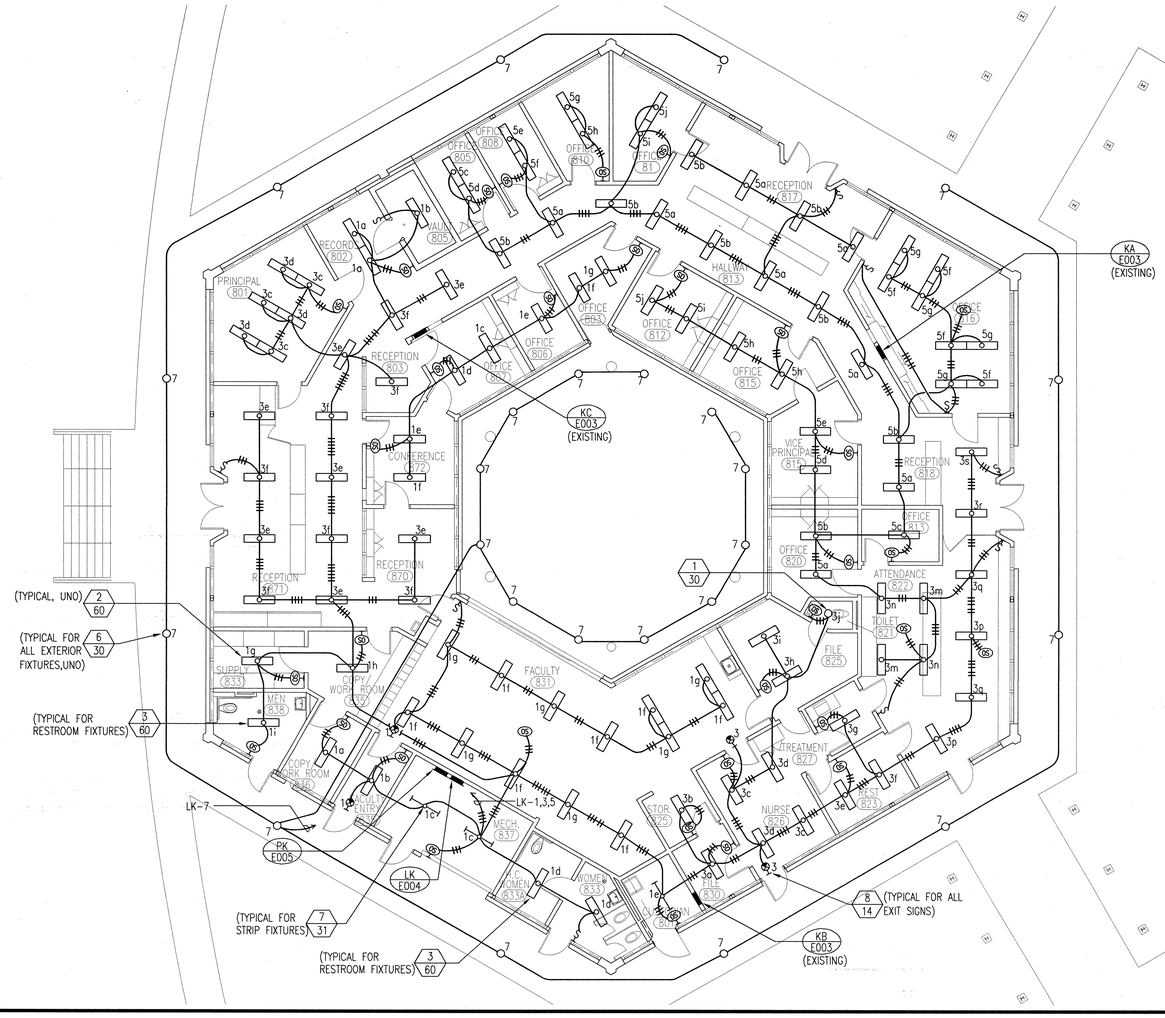

BUILDING K LIGHTING PLAN

ADMINISTRATION BUILDING

A19

1/8"=1'-0"

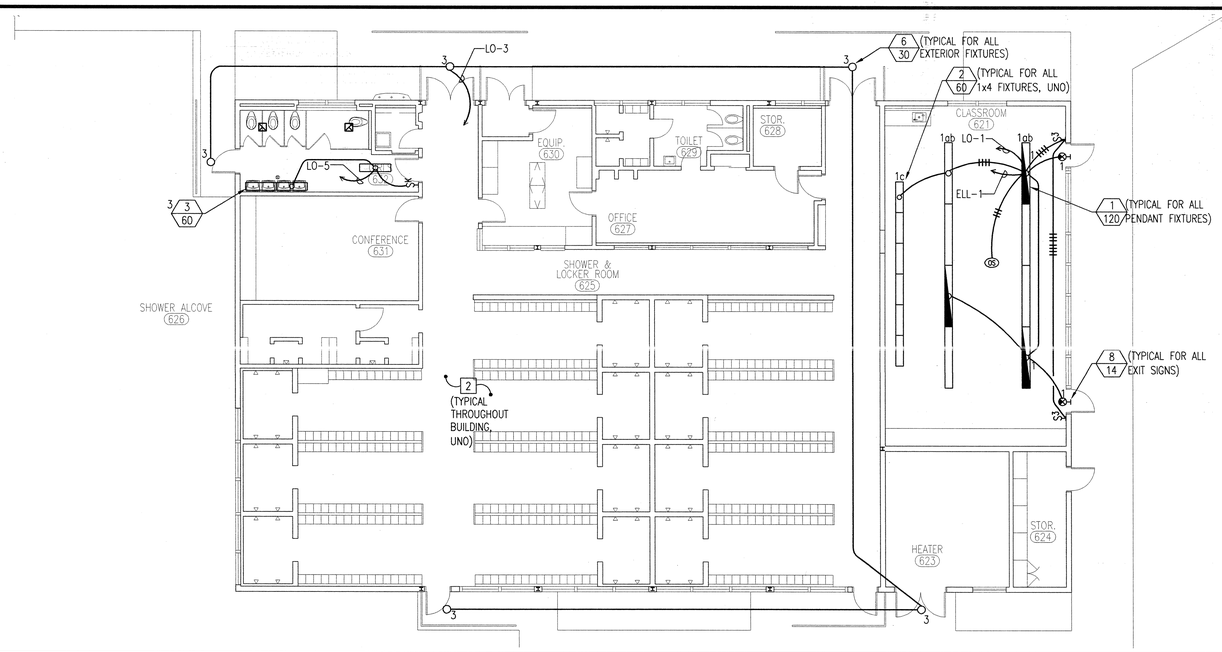

BUILDING O LIGHTING PLAN

GIRLS LOCKER BUILDING

A19

1/8"=1'-0"

PLAN NOTES

1. 2#12 AND 1#12(GRD) IN 3/4"C. TO NEAREST 120V BUILDING PANELBOARD. PROVIDE ONE 20A, 1P CIRCUIT BREAKER IN SPACE OF EXISTING PANELBOARD AND CONNECT AS REQUIRED TO RELAY, PHOTOCELL AND TIMECLOCK FOR A COMPLETE AND OPERABLE SYSTEM.
2. EXISTING LIGHTING TO REMAIN, PROTECTED IN PLACE.

KEY PLAN

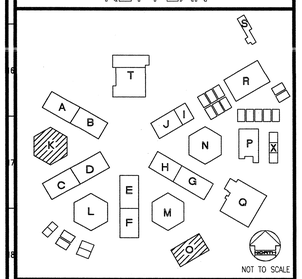

REVISED MAY 12 2004

IDENTIFICATION STAMP
DIV. OF THE STATE ARCHITECT
OFFICE OF REGULATION SERVICES
FILE NO. 19-H51
APPL. NO. 03-106434
AC ____ FLS ____ SS ____
DATE ____

Dougherty ■ Dougherty
Architecture • Planning • Interior Design
3194-D Airport Loop Drive
Costa Mesa, CA 92626
(714) 427-0277

GLP Engineering, Inc.
Mechanical • Electrical • Plumbing
3185-C Airway Avenue
Costa Mesa, CA 92626-4601
Telephone (714) 751-1851
Fax (714) 751-4216

Copyright © 2002 Dougherty + Dougherty

LICENSED ARCHITECT REGISTERED PROFESSIONAL ENGINEER NO. C-6824 EXP. JULY 31, 2004 STATE OF CALIFORNIA
Architect Seal

REGISTERED PROFESSIONAL ENGINEER No. E 17252 EXP. 6-30-04 ELECTRICAL STATE OF CALIFORNIA
Consultant Seal

LA MIRADA HIGH SCHOOL MODERNIZATION

NORWALK - LA MIRADA UNIFIED SCHOOL DISTRICT
13520 ADELFA DRIVE LA MIRADA, CA 90638

BUILDINGS K & O
LIGHTING PLANS

Date:	05-11-04
Job:	20237.50
Scale:	AS NOTED
Drawn:	
Revisions:	
1	12-01-03

E106

P:\Clients\Dbd\Norwalk-LaMirada SD\La Mirada HS Modernization 105.045\Drawings\105045-01.dwg May 11, 2004 - 3:13pm

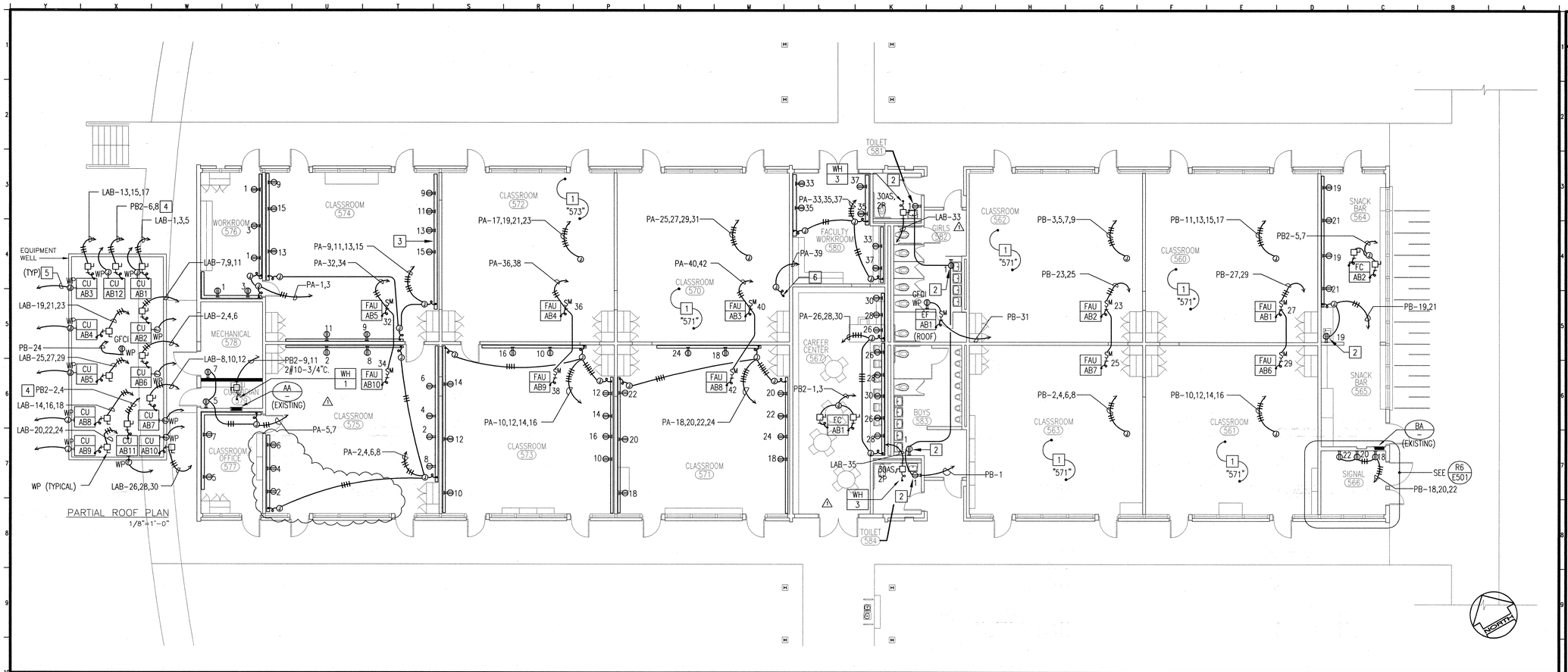

BUILDING A-B POWER PLAN
550 BUILDING
A10
1/8"=1'-0"

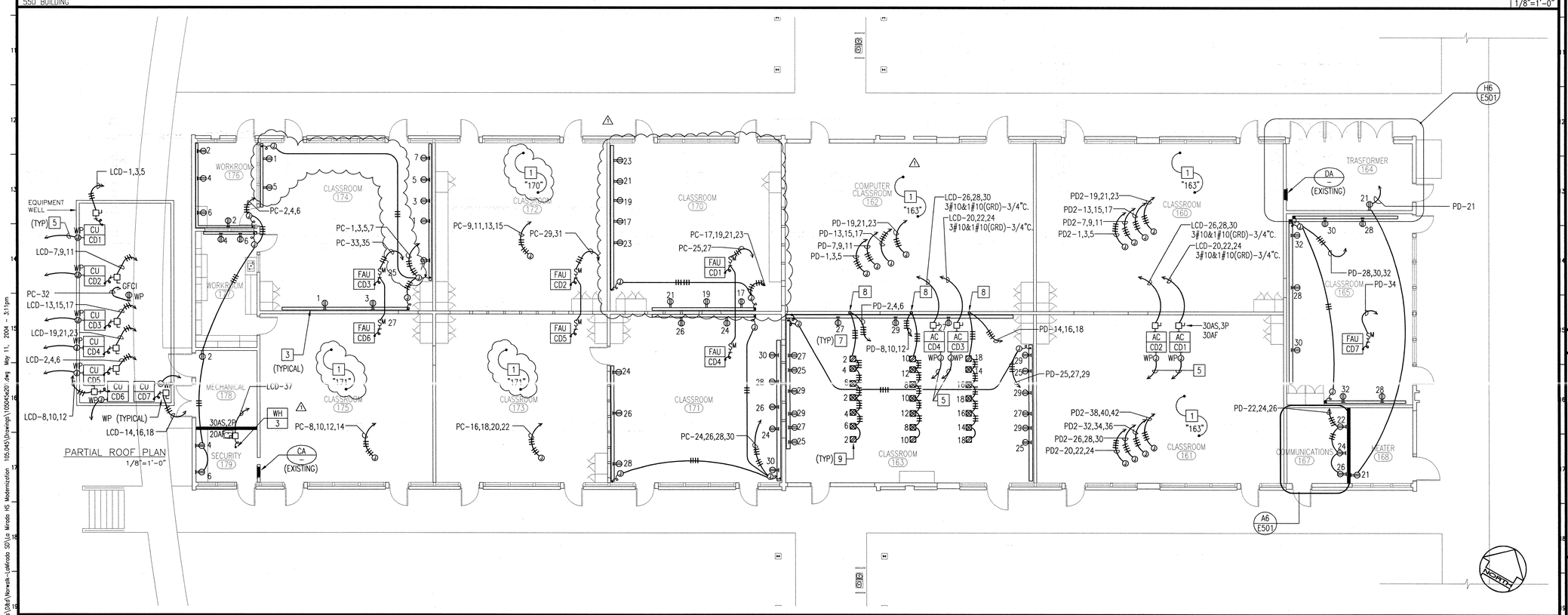

BUILDING C-D POWER PLAN
150 BUILDING
A19
1/8"=1'-0"

PLAN NOTES

1. PROVIDE COMPLETE POWER SYSTEMS IN CLASSROOM INCLUDING ALL RECEPTACLES, RACEWAYS, JUNCTION BOXES, CONDUIT, WIRING AND CONNECTIONS PER TYPICAL CLASSROOM INDICATED AS REQUIRED FOR A COMPLETE AND OPERABLE SYSTEM.
2. MOUNT GFI RECEPTACLE HORIZONTALLY, +6" ABOVE COUNTER SPLASH.
3. TWO-PIECE NON-METALLIC SURFACE RACEWAY SYSTEM WITH TWO COMPARTMENTS FOR ROUTING POWER AND DATA SYSTEM CONDUCTORS (WIREMOLD #5400 SERIES OR EQUAL) COMPLETE WITH DUPLEX RECEPTACLE AND DATA OUTLETS AT LOCATIONS AS SHOWN ON PLAN.
4. 2#10 & 1#10(GRD) IN 3/4"C.
5. PROVIDE 3/4"C.O. FOR MECHANICAL CONTROL WIRING. VERIFY EXACT TERMINATION WITH MECHANICAL PRIOR TO ROUGH-IN. TYPICAL FOR ALL HVAC UNITS THROUGHOUT.
6. PROVIDE CONNECTION TO SMOKE/FIRE DAMPER PER MANUFACTURER'S REQUIREMENTS.
7. ROUTE CONDUIT BELOW GRADE AS REQUIRED TO PERFORM WORK INDICATED.
8. ROUTE CONDUIT FROM BELOW GRADE, CONCEALED IN WALL AS REQUIRED TO PERFORM WORK INDICATED.
9. MOUNT RECEPTACLE FLUSH IN-GRADE. VERIFY EXACT LOCATION WITH ARCHITECT PRIOR TO ROUGH-IN.

KEY PLAN

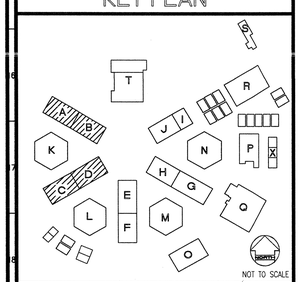

REVISED
MAY 12 2004

IDENTIFICATION STAMP
DIV. OF THE STATE ARCHITECT
OFFICE OF REGULATION SERVICES
FILE NO. 19-H51
APPL. NO. 03-106434
AC ____ FLS NET SS ____
DATE ____

Dougherty + Dougherty
Architecture • Planning • Interior Design
3194-D Airport Loop Drive
Costa Mesa, CA 92626
(714) 427-0277

Copyright © 2002 Dougherty + Dougherty

GLP Engineering, Inc.
Mechanical and Electrical Engineers
3185-C Airway Avenue
Costa Mesa, CA 92626-4601
Telephone (714) 751-1851
Fax (714) 751-4216

Architect Seal

Consultant Seal

LA MIRADA HIGH SCHOOL
MODERNIZATION
NORWALK - LA MIRADA UNIFIED SCHOOL DISTRICT
13520 ADELFA DRIVE LA MIRADA, CA 90638

CLASSROOM BUILDINGS A-B & C-D POWER PLANS

Date:	05-11-04
Job:	20237.50
Scale:	AS NOTED
Drawn:	
Revisions:	
1	12-01-03

E201

P:\Clients\Dofe\Norwalk-LaMirada SD\La Mirada HS Modernization 105.045\Drawings\105045e201.dwg May 11, 2004 - 3:11pm

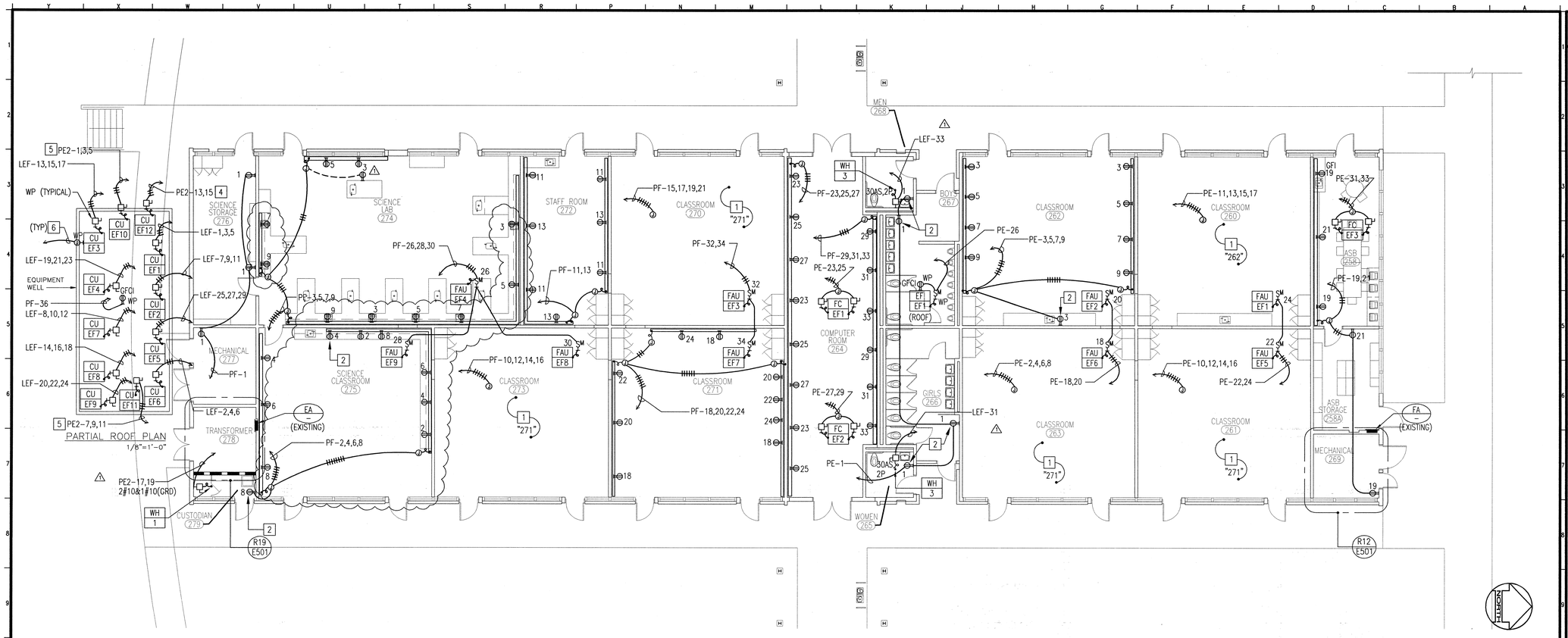

BUILDING E-F POWER PLAN

250 BUILDING

A10

1/8"=1'-0"

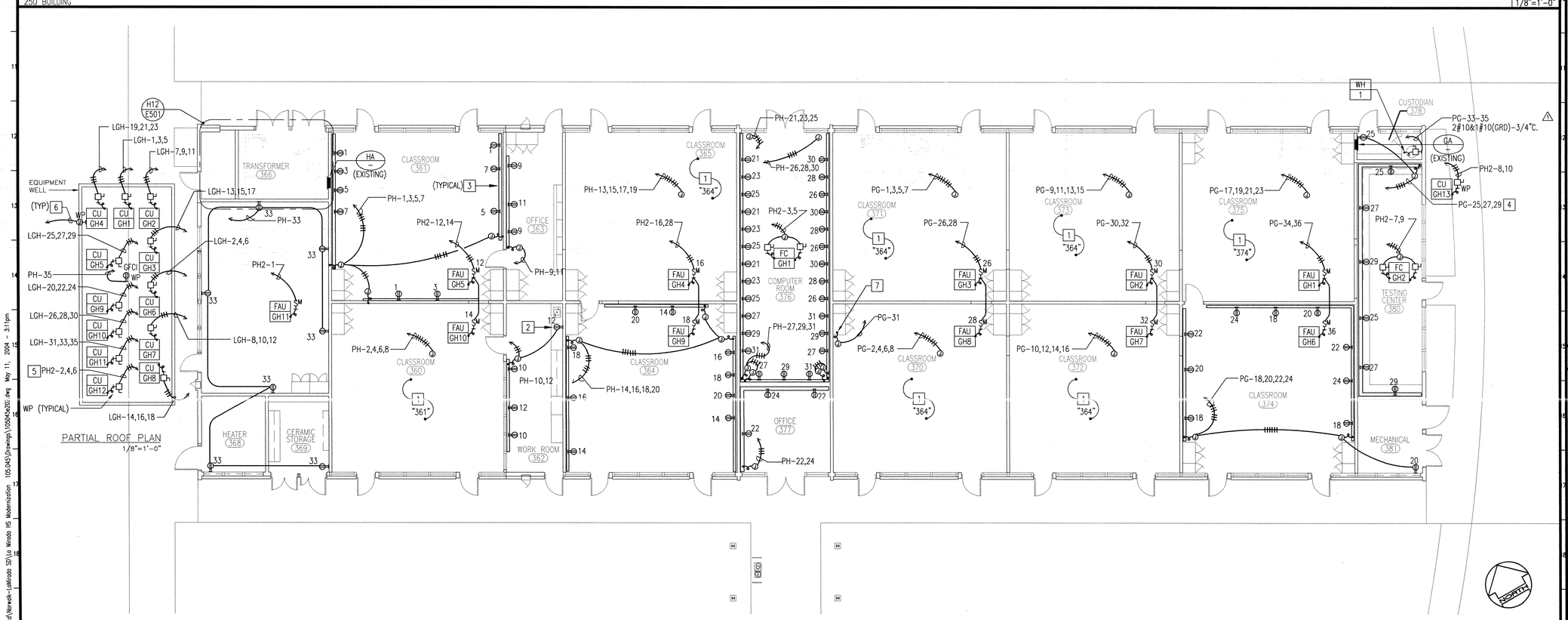

BUILDING G-H POWER PLAN

350 BUILDING

A19

1/8"=1'-0"

PLAN NOTES

1. PROVIDE COMPLETE POWER SYSTEMS IN CLASSROOM INCLUDING ALL RECEPTACLES, RACEWAYS, JUNCTION BOXES, CONDUIT, WIRING AND CONNECTIONS PER TYPICAL CLASSROOM INDICATED AS REQUIRED FOR A COMPLETE AND OPERABLE SYSTEM.
2. MOUNT GFI RECEPTACLE HORIZONTALLY, +6" ABOVE COUNTER SPLASH.
3. TWO-PIECE NON-METALLIC SURFACE RACEWAY SYSTEM WITH TWO COMPARTMENTS FOR ROUTING POWER AND DATA SYSTEM CONDUCTORS (WIREMOLD #5400 SERIES OR EQUAL) COMPLETE WITH DUPLEX RECEPTACLE AND DATA OUTLETS AT LOCATIONS AS SHOWN ON PLAN.
4. 2#10 & 1#10(GRD) IN 3/4"C.
5. 3#10 & 1#10(GRD) IN 3/4"C.
6. PROVIDE 1/2"C.O. FOR MECHANICAL CONTROL WIRING. VERIFY EXACT TERMINATION WITH MECHANICAL PRIOR TO ROUGH-IN. TYPICAL FOR ALL HVAC UNITS THROUGHOUT.
7. PROVIDE CONNECTION TO SMOKE/FIRE DAMPER PER MANUFACTURER'S REQUIREMENTS.

KEY PLAN

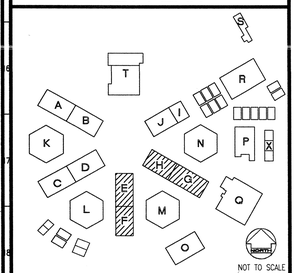

REVISED MAY 12 2004

IDENTIFICATION STAMP
DIV. OF THE STATE ARCHITECT
OFFICE OF REGULATION SERVICES
FILE NO. 19-H51
APPL. NO. 03-106434
AC ____ FLS NET SS ____
DATE ____

Dougherty + Dougherty
Architecture • Planning • Interior Design
3194-D Airport Loop Drive
Costa Mesa, CA 92626
(714) 957-7007

Copyright © 2002 Dougherty + Dougherty

GLP Engineering, Inc.
Mechanical and Electrical Engineers
3185-C Airway Avenue
Costa Mesa, CA 92626-4601
Telephone (714) 751-1851
Fax (714) 751-4216

Licensed Architect — Registered Professional Engineer — Consultant Seal

LA MIRADA HIGH SCHOOL MODERNIZATION

NORWALK - LA MIRADA UNIFIED SCHOOL DISTRICT
13520 ADELFA DRIVE LA MIRADA, CA 90638

CLASSROOM BUILDINGS E-F & G-H POWER PLANS

Date:	05-11-04
Job:	20237.50
Scale:	AS NOTED
Drawn:	
Revisions:	
1	12-01-03

E202

P:\Clients\DSA\Norwalk-LaMirada SD\La Mirada HS Modernization 105.045\Drawings\105045e201.dwg May 11, 2004 - 3:11pm

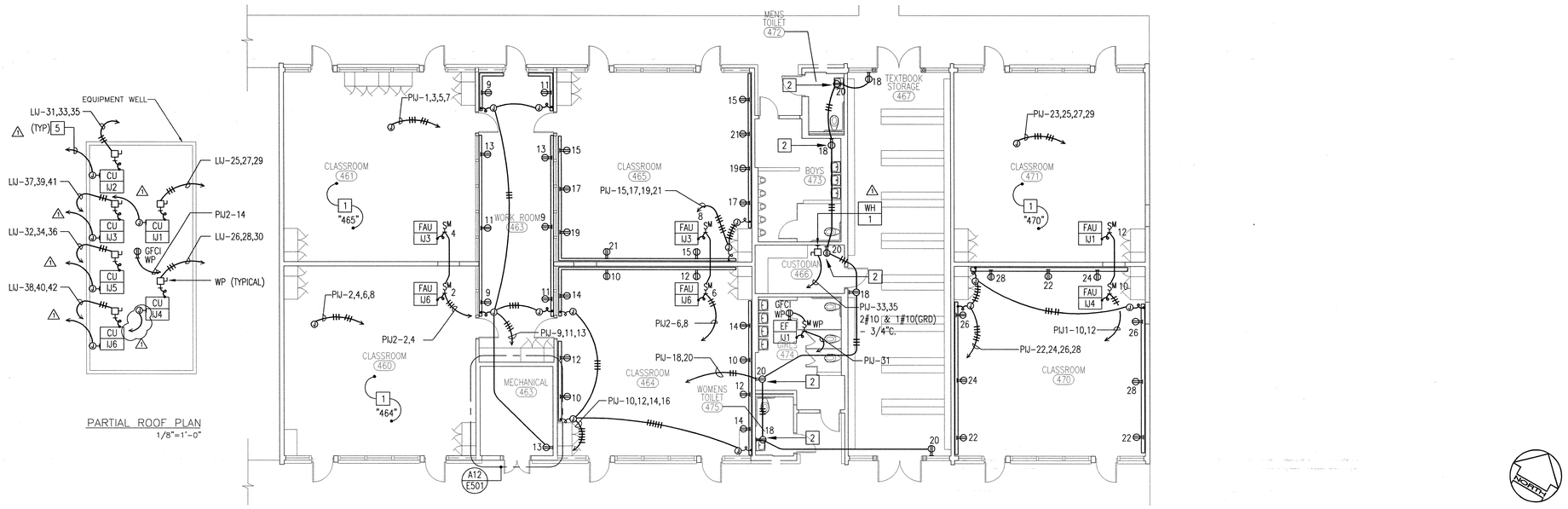

BUILDING I-J POWER PLAN
150 BUILDING

A10
1/8"=1'-0"

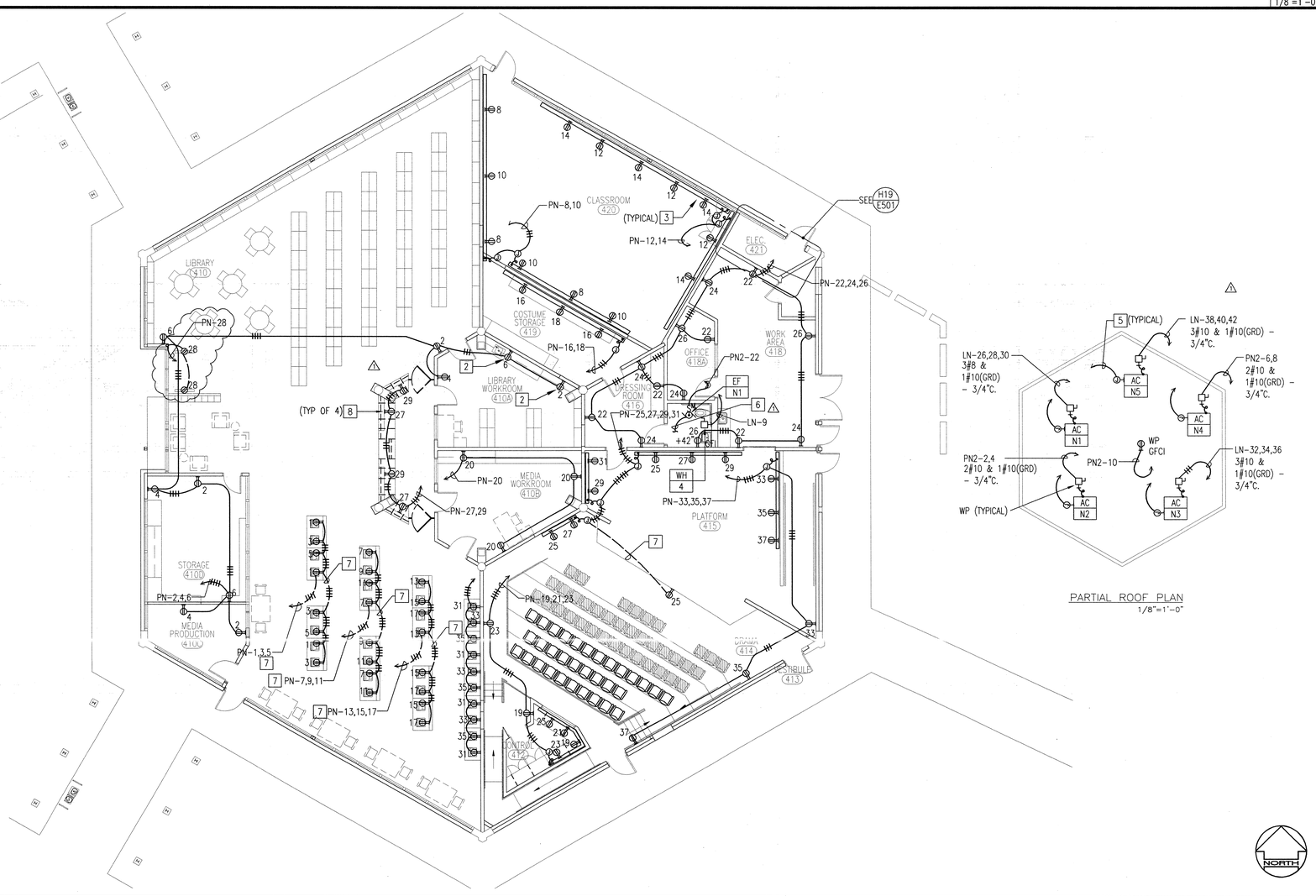

BUILDING N POWER PLAN
LIBRARY/DRAMA BUILDING

A19
1/8"=1'-0"

PLAN NOTES

1. PROVIDE COMPLETE POWER SYSTEMS IN CLASSROOM INCLUDING ALL RECEPTACLES, RACEWAYS, JUNCTION BOXES, CONDUIT, WIRING AND CONNECTIONS PER TYPICAL CLASSROOM INDICATED AS REQUIRED FOR A COMPLETE AND OPERABLE SYSTEM.
2. MOUNT GFI RECEPTACLE HORIZONTALLY, +6" ABOVE COUNTER SPLASH.
3. TWO-PIECE NON-METALLIC SURFACE RACEWAY SYSTEM WITH TWO COMPARTMENTS FOR ROUTING POWER AND DATA SYSTEM CONDUCTORS (WIREMOLD #5400 SERIES OR EQUAL) COMPLETE WITH DUPLEX RECEPTACLE AND DATA OUTLETS AT LOCATIONS AS SHOWN ON PLAN.
4. MOUNT RACEWAY AT +6" ABOVE COUNTER SPLASH.
5. PROVIDE 1/2"C.O. FOR MECHANICAL CONTROL WIRING. VERIFY EXACT TERMINATION WITH MECHANICAL PRIOR TO ROUGH-IN. TYPICAL FOR ALL HVAC UNITS THROUGHOUT.
6. INTERLOCK EXHAUST FAN WITH TOILET ROOM LIGHTING.
7. ROUTE CONDUIT BELOW GRADE AS REQUIRED TO PREFORM WORK INDICATED.
8. MOUNT IN CASEWORK AS DIRECTED BY ARCHITECT.

KEY PLAN

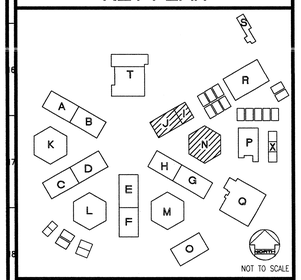

REVISED
MAY 12 2004

IDENTIFICATION STAMP
DIV. OF THE STATE ARCHITECT
OFFICE OF REGULATION SERVICES
FILE NO. 19-H51
APPL. NO. 03-106434
AC ____ FLS NK SS ____
DATE ____

Dougherty ■■ Dougherty
Architecture • Planning • Interior Design
3194-D Airport Loop Drive
Costa Mesa, CA 92626
(714) 425-0277 FAX 425-0277

Copyright © 2002 Dougherty + Dougherty

GLP Engineering, Inc.
Mechanical and Electrical Engineers
3185-C Airway Avenue
Costa Mesa, CA 92626-4601
Telephone (714) 751-1851
Fax (714) 751-4216

LICENSED ARCHITECT
REGISTERED PROFESSIONAL ENGINEER
NO. C-6824
EXP. JULY 31
STATE OF CALIFORNIA
Architect Seal

REGISTERED PROFESSIONAL ENGINEER
M. E. No. E 17252
EXP. 6-30-04
STATE OF CALIFORNIA
Consultant Seal

LA MIRADA HIGH SCHOOL
MODERNIZATION
NORWALK - LA MIRADA UNIFIED SCHOOL DISTRICT
13520 ADELFA DRIVE LA MIRADA, CA 90638

CLASSROOM
BUILDINGS I-J & N
POWER PLANS

Date:	05-11-04
Job:	20237.50
Scale:	AS NOTED
Drawn:	
Revisions:	
1	12-01-03

E203

P:\Clients\Dsd\Norwalk-LaMirada SD\La Mirada HS Modernization 105.045\Drawings\105045201.dwg May 11, 2004 - 3:11pm

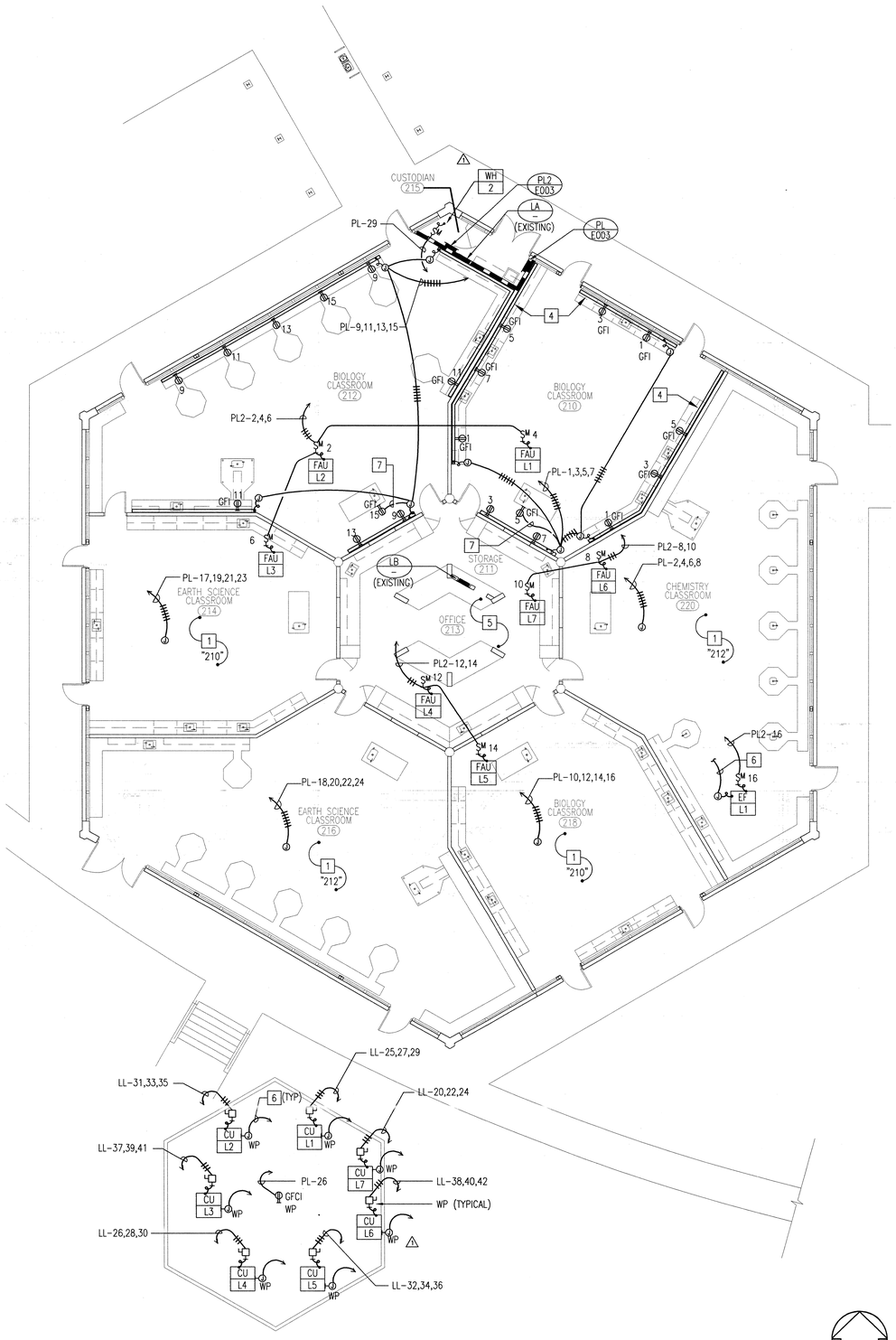

PARTIAL ROOF PLAN
1/8"=1'-0"

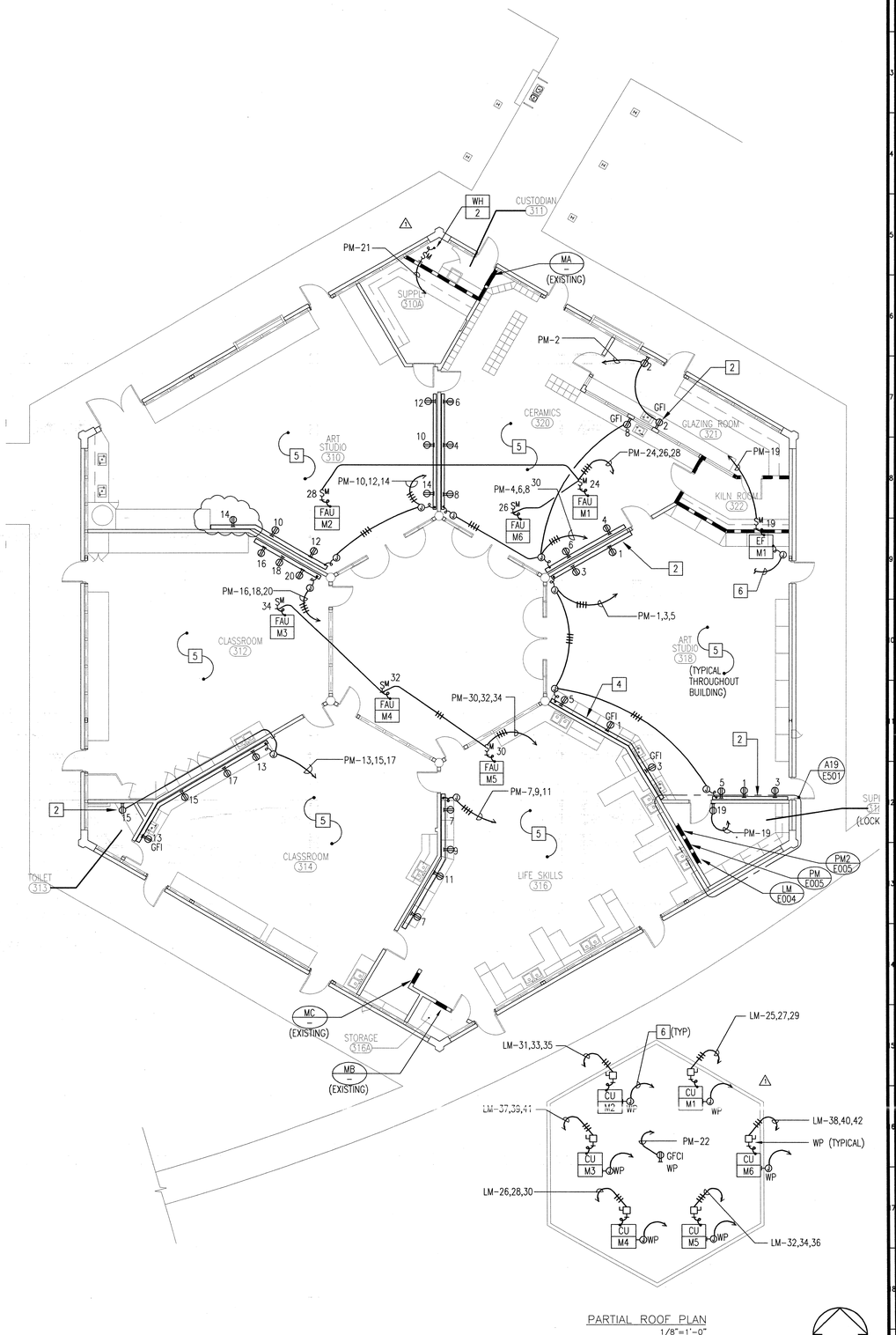

PARTIAL ROOF PLAN
1/8"=1'-0"

PLAN NOTES

1. PROVIDE COMPLETE POWER SYSTEMS IN CLASSROOM INCLUDING ALL RECEPTACLES, RACEWAYS, JUNCTION BOXES, CONDUIT, WIRING AND CONNECTIONS PER TYPICAL CLASSROOM INDICATED AS REQUIRED FOR A COMPLETE AND OPERABLE SYSTEM.
2. MOUNT GFI RECEPTACLE HORIZONTALLY, +6" ABOVE COUNTER SPLASH.
3. TWO-PIECE NON-METALLIC SURFACE RACEWAY SYSTEM WITH TWO COMPARTMENTS FOR ROUTING POWER AND DATA SYSTEM CONDUCTORS (WIREMOLD #5400 SERIES OR EQUAL) COMPLETE WITH DUPLEX RECEPTACLE AND DATA OUTLETS AT LOCATIONS AS SHOWN ON PLAN.
4. MOUNT RACEWAY AT +6" ABOVE COUNTER SPLASH.
5. EXISTING POWER SYSTEM TO REMAIN.
6. PROVIDE 3/4"C.O. FOR MECHANICAL CONTROL WIRING. VERIFY EXACT TERMINATION WITH MECHANICAL PRIOR TO ROUGH-IN. TYPICAL FOR ALL HVAC UNITS THROUGHOUT.
7. ROUTE CONDUIT BELOW GRADE AS REQUIRED TO PERFORM WORK INDICATED.

KEY PLAN

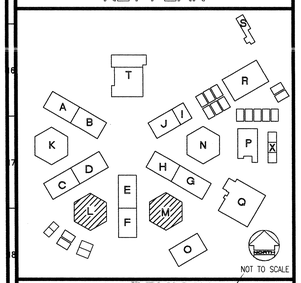

REVISED
MAY 12 2004

IDENTIFICATION STAMP
DIV. OF THE STATE ARCHITECT
OFFICE OF REGULATION SERVICES
FILE NO. 19-H51
APPL. NO. 03-106434
AC. ____ FLS. NL SS ____
DATE ____

Dougherty + Dougherty
Architecture • Planning • Interior Design
3194-D Airport Loop Drive
Costa Mesa, CA 92626
(714) 427-0277

Copyright © 2002 Dougherty + Dougherty

GLP Engineering, Inc.
Mechanical and Electrical Engineers
3185-C Airway Avenue
Costa Mesa, CA 92626-4601
Telephone (714) 751-1851
Fax (714) 751-4216

LICENSED ARCHITECT
No. C-9841
REGISTERED PROFESSIONAL ENGINEER
STATE OF CALIFORNIA
Architect Seal

REGISTERED PROFESSIONAL ENGINEER
No. E 17252
Exp. 6-30-04
ELECTRICAL
STATE OF CALIFORNIA
Consultant Seal

LA MIRADA HIGH SCHOOL
MODERNIZATION
NORWALK - LA MIRADA UNIFIED SCHOOL DISTRICT
13520 ADELFA DRIVE LA MIRADA, CA 90638

CLASSROOM
BUILDINGS L & M
POWER PLANS

Date:	05-11-04
Job:	20237.50
Scale:	AS NOTED
Drawn:	
Revisions:	
1	12-01-03

E204

BUILDING L POWER PLAN — M19
200 BUILDING — 1/8"=1'-0"

BUILDING M POWER PLAN — A19
300 BUILDING — 1/8"=1'-0"

P:\Clients\Dbd\Norwalk-LaMirada SD\La Mirada HS Modernization 105.045\Drawings\105045e204.dwg May 11, 2004 - 3:10pm

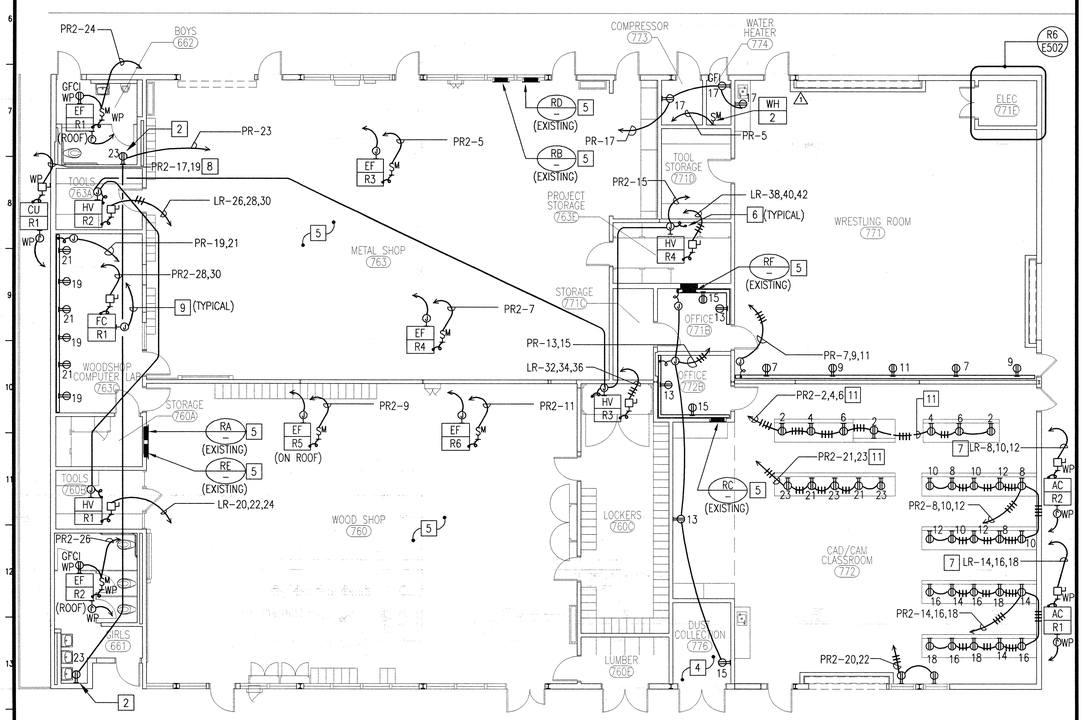

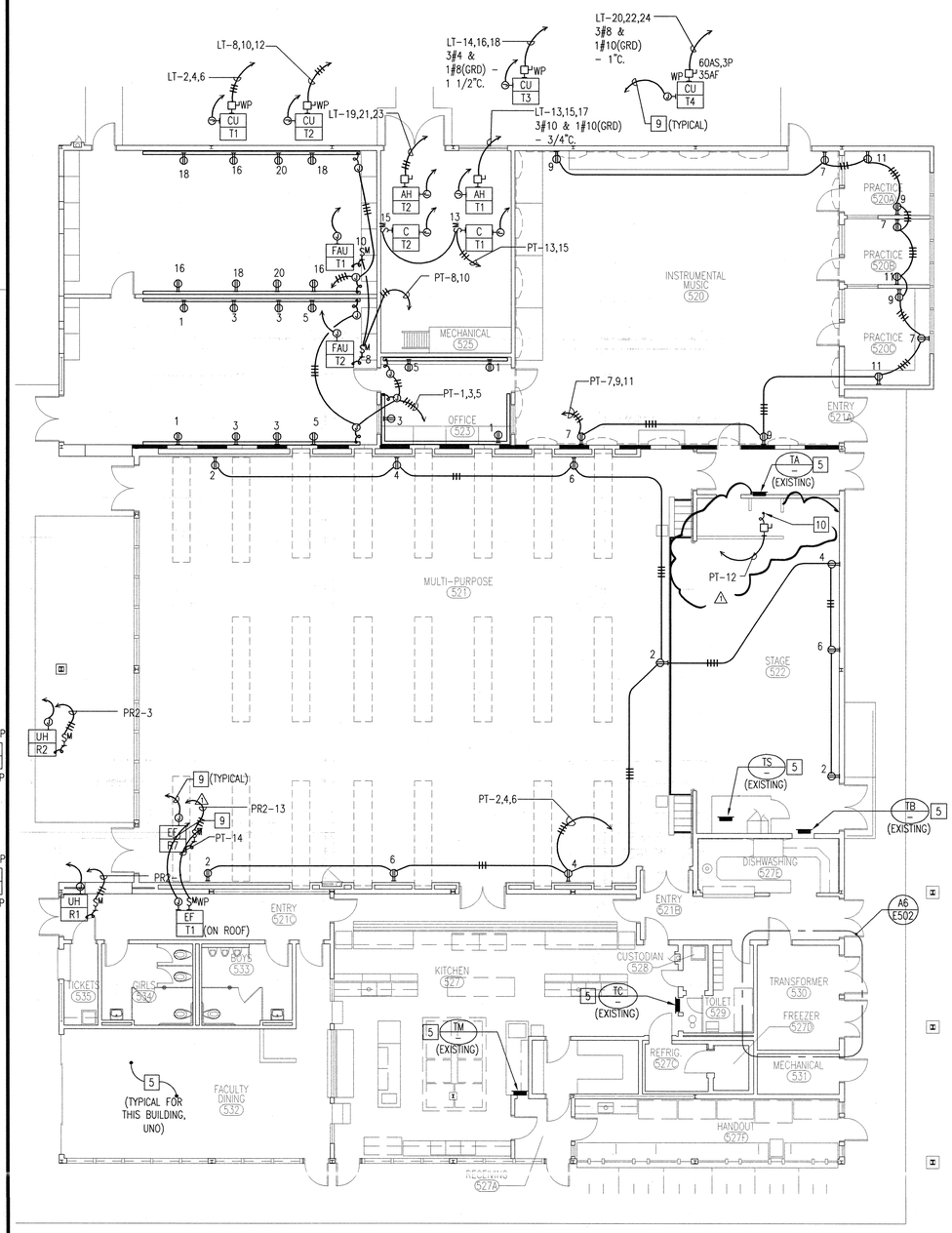

PLAN NOTES

1. PROVIDE COMPLETE POWER SYSTEMS IN CLASSROOM INCLUDING ALL RECEPTACLES, RACEWAYS, JUNCTION BOXES, CONDUIT, WIRING AND CONNECTIONS PER TYPICAL CLASSROOM INDICATED AS REQUIRED FOR A COMPLETE AND OPERABLE SYSTEM.
2. MOUNT GFI RECEPTACLE HORIZONTALLY, +6" ABOVE COUNTER SPLASH.
3. TWO-PIECE NON-METALLIC SURFACE RACEWAY SYSTEM WITH TWO COMPARTMENTS FOR ROUTING POWER AND DATA SYSTEM CONDUCTORS (WIREMOLD #5400 SERIES OR EQUAL) COMPLETE WITH DUPLEX RECEPTACLE AND DATA OUTLETS AT LOCATIONS AS SHOWN ON PLAN.
4. ALL ELECTRICAL EQUIPMENT IN THIS ROOM SHALL BE EXPLOSION PROOF.
5. EXISTING ELECTRICAL SHALL BE PROTECTED IN PLACE.
6. PROVIDE CONNECTION TO HEAT-VENT UNIT CONTROLS PER MANUFACTURER'S REQUIREMENTS.
7. 3#10 & 1#10(GRD) IN 3/4"C.
8. 2#10 & 1#10(GRD) IN 3/4"C.
9. PROVIDE 3/4"C.O. FOR MECHANICAL CONTROL WIRING. VERIFY EXACT TERMINATION WITH MECHANICAL PRIOR TO ROUGH-IN. TYPICAL FOR ALL HVAC UNITS THROUGHOUT.
10. PROVIDE CONNECTION TO WHEELCHAIR LIFT PER MANUFACTURER'S REQUIREMENTS, INCLUDING ALL CONTROLS, CONDUIT, WIRING, AND CONNECTIONS REQUIRED FOR A COMPLETE AND OPERABLE SYSTEM.
11. ROUTE CONDUIT BELOW GRADE AS REQUIRED TO PREFORM WORK INDICATED.

△1

KEY PLAN

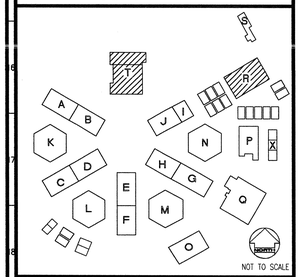

REVISED MAY 12 2004

IDENTIFICATION STAMP
DIV. OF THE STATE ARCHITECT
OFFICE OF REGULATION SERVICES
FILE NO. 19-H51
APPL. NO. 03-106434
AC ____ FLS NI SS ____
DATE ____

BUILDING R POWER PLAN — L19 — 1/8"=1'-0"
SHOP BUILDING

BUILDING T POWER PLAN — A19 — 1/8"=1'-0"
MULTI-PURPOSE BUILDING

Dougherty + Dougherty
Architecture • Planning • Interior Design
3194-D Airport Loop Drive
Costa Mesa, CA 92626
(714) 427-0277

Copyright © 2002 Dougherty + Dougherty

GLP Engineering, Inc.
Mechanical and Electrical Engineers
3185-C Airway Avenue
Costa Mesa, CA 92626-4601
Telephone (714) 751-1851
Fax (714) 751-4216

Architect Seal

Consultant Seal

LA MIRADA HIGH SCHOOL
MODERNIZATION
NORWALK - LA MIRADA UNIFIED SCHOOL DISTRICT
13520 ADELFA DRIVE LA MIRADA, CA 90638

BUILDINGS
R & T
POWER PLANS

Date:	05-11-04
Job:	20237.50
Scale:	AS NOTED
Drawn:	
Revisions:	
△1	12-01-03

E205

P:\Clients\Jobs\Norwalk-LaMirada SD\La Mirada HS Modernization 105.045\Drawings\105045e20r.dwg May 11, 2004 - 3:10pm

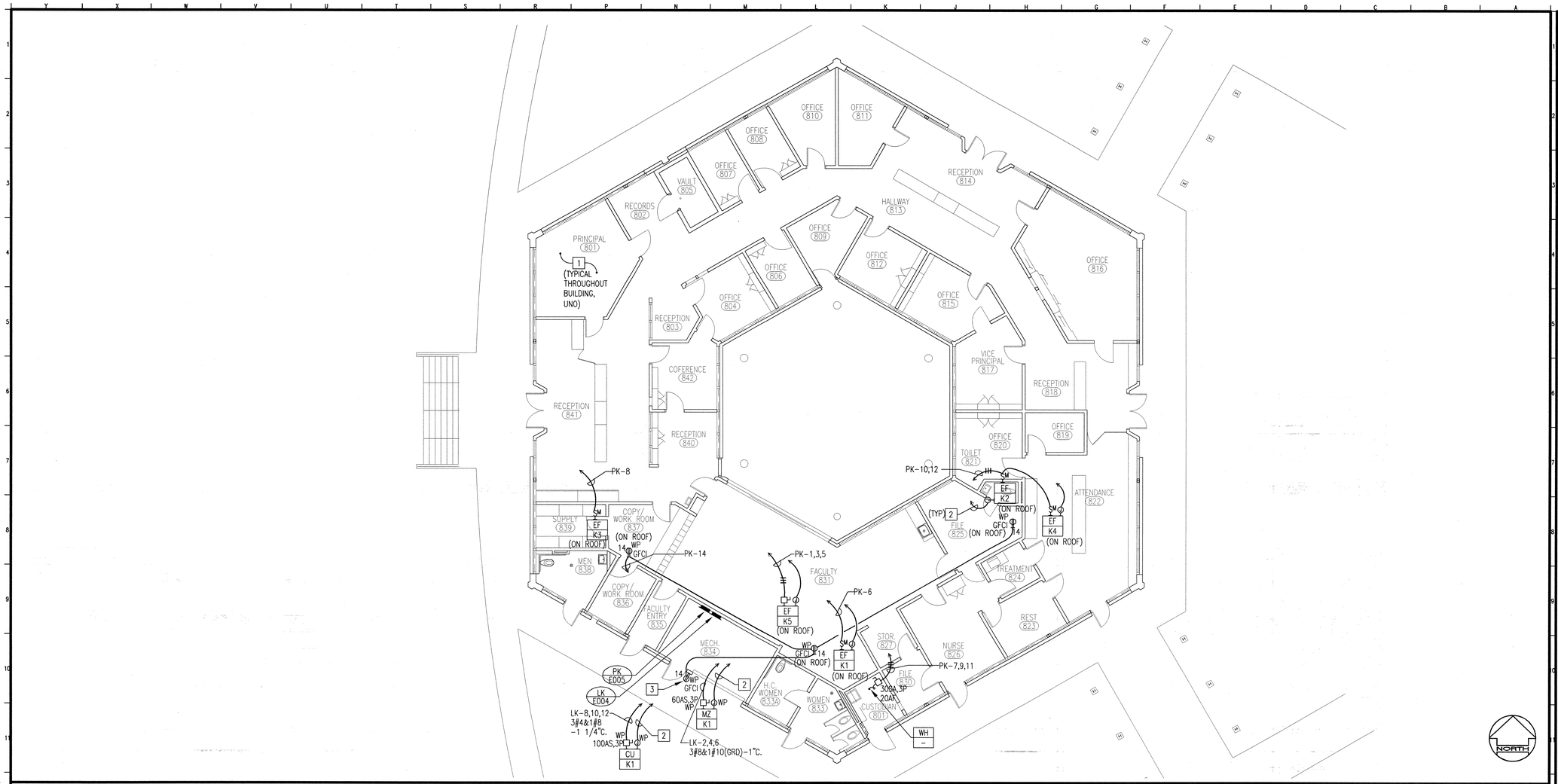

BUILDING K POWER PLAN

ADMINISTRATION BUILDING

A19
1/8"=1'-0"

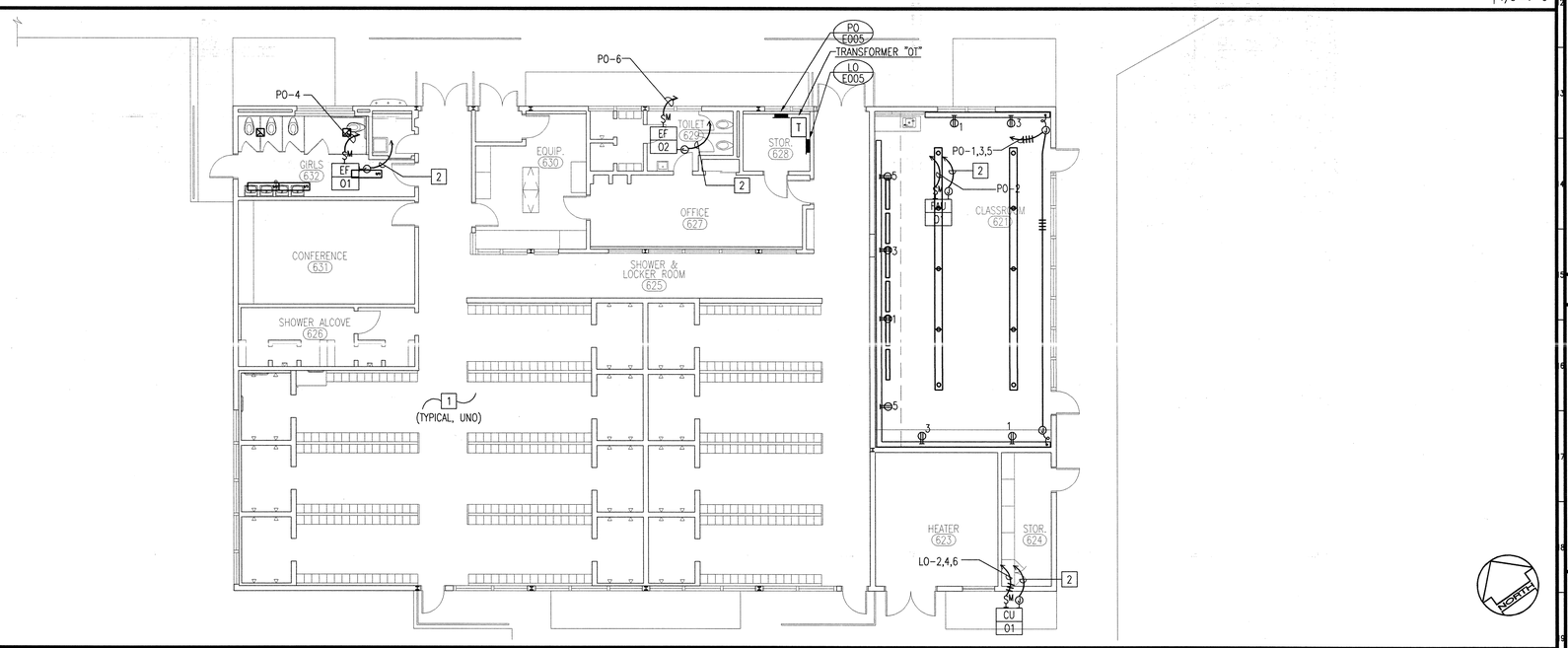

BUILDING O POWER PLAN

GIRLS LOCKER BUILDING

A19
1/8"=1'-0"

PLAN NOTES

1. EXISTING ELECTRICAL TO REMAIN.
2. PROVIDE 3/4"C.O. FOR MECHANICAL CONTROL WIRING. VERIFY EXACT TERMINATION WITH MECHANICAL PRIOR TO ROUGH-IN. TYPICAL FOR ALL HVAC UNITS THROUGHOUT.
3. PROVIDE WEATHERPROOF LOCKABLE ENCLOSURE.

KEY PLAN

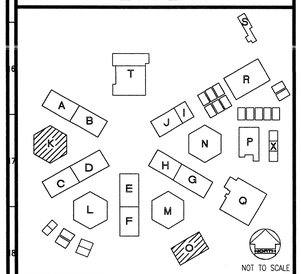

REVISED
MAY 12 2004

IDENTIFICATION STAMP
DIV. OF THE STATE ARCHITECT
OFFICE OF REGULATION SERVICES
FILE NO. 19-H51
APPL. NO. 03-106434
AC. ____ FLS. ____ SS. ____
DATE ____

Dougherty + Dougherty
Architecture • Planning • Interior Design
3194-D Airport Loop Drive
Costa Mesa, CA 92626
(714) 425-0277

Copyright © 2002 Dougherty + Dougherty

GLP Engineering, Inc.
Mechanical • Electrical • Engineers
3185-C Airway Avenue
Costa Mesa, CA 92626-4601
Telephone (714) 751-1851
Fax (714) 751-4216

Architect Seal

Consultant Seal

LA MIRADA HIGH SCHOOL
MODERNIZATION
NORWALK - LA MIRADA UNIFIED SCHOOL DISTRICT
13520 ADELFA DRIVE LA MIRADA, CA 90638

BUILDINGS
K & O
POWER PLANS

Date:	05-11-04
Job:	20237.50
Scale:	AS NOTED
Drawn:	
Revisions:	
1	12-01-03

E206

P:\Clients\Dbtd\Norwalk-LaMirada SD\Lg Mirada HS Modernization 105.045\Drawings\105045e201.dwg May 11, 2004 - 3:10pm

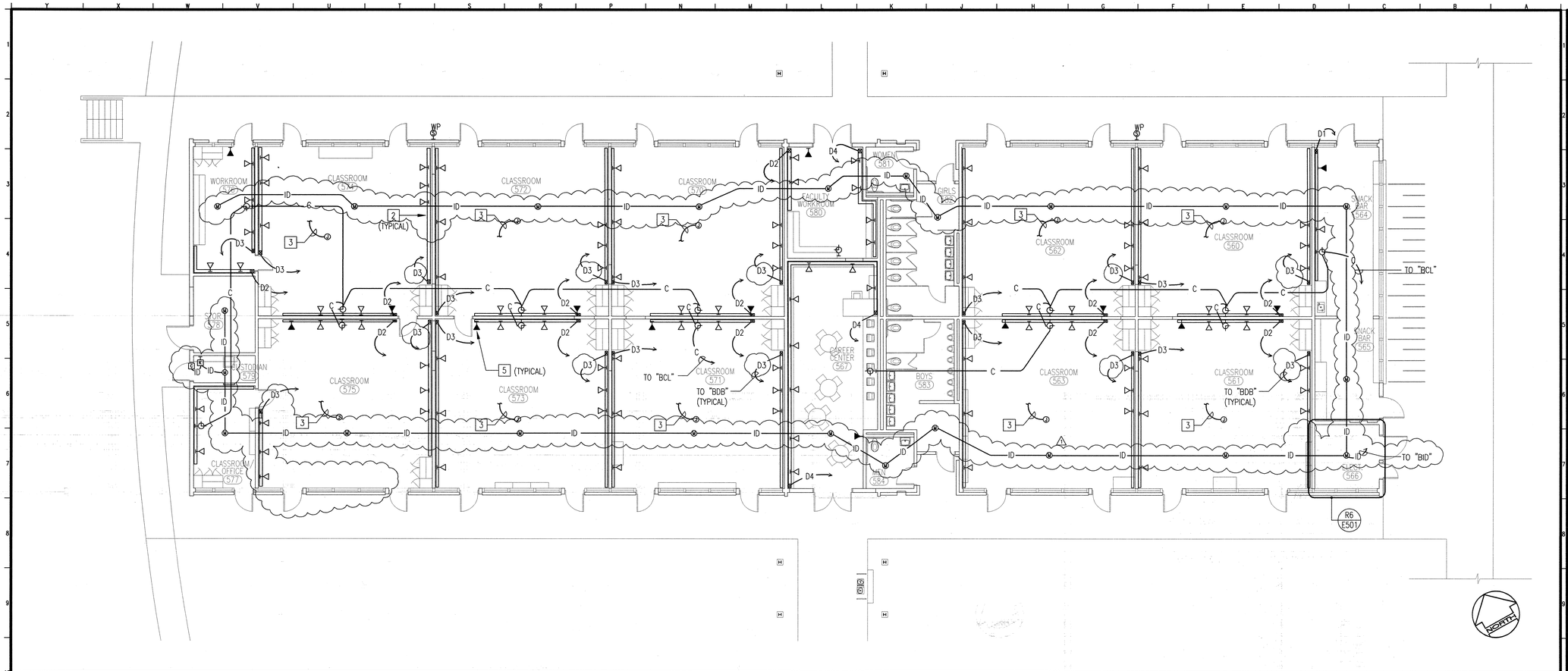

BUILDING A-B SIGNAL PLAN — A10

550 BUILDING — 1/8"=1'-0"

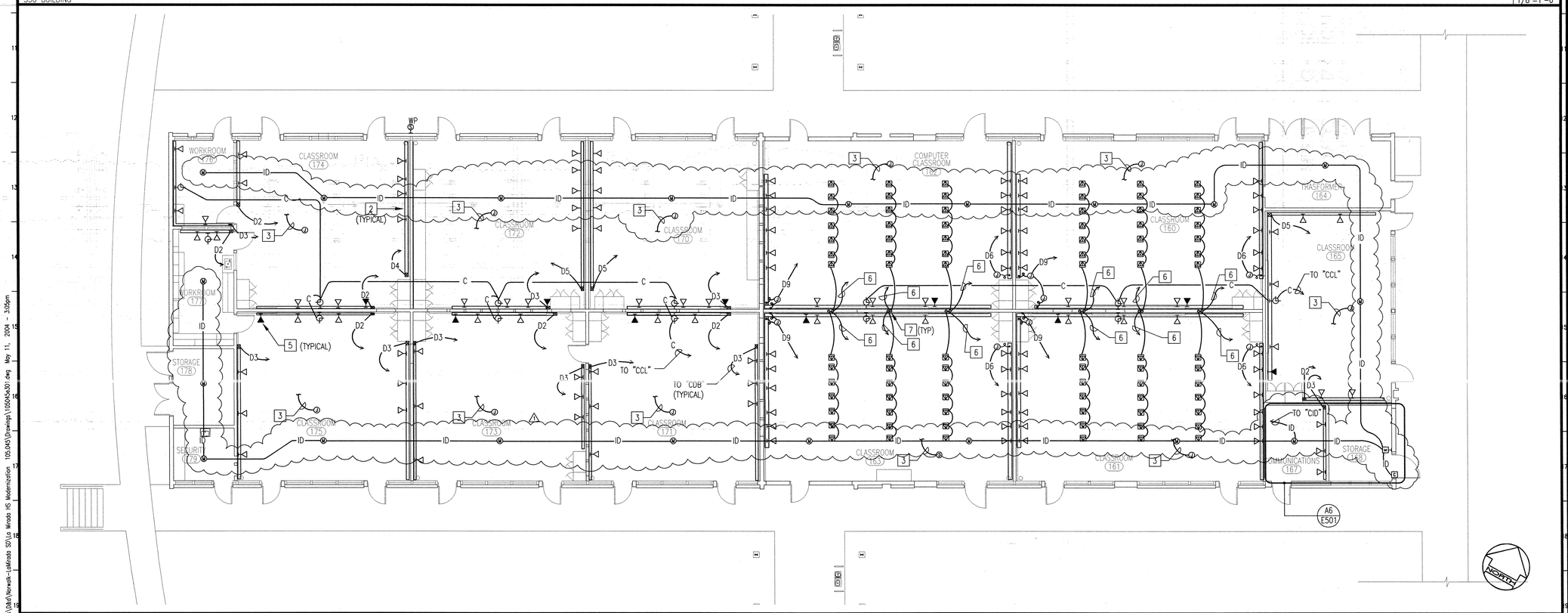

BUILDING C-D SIGNAL PLAN — A19

150 BUILDING — 1/8"=1'-0"

PLAN NOTES

1. PROVIDE COMPLETE SIGNAL SYSTEMS IN CLASSROOMS INCLUDING ALL DATA OUTLETS, SPEAKERS, CLOCKS, TV OUTLETS, TELEPHONE OUTLETS, TELEPHONE HANDSETS, RACEWAYS, JUNCTION BOXES, CONDUIT, WIRING, AND CONNECTIONS PER TYPICAL CLASSROOM INDICATED AS REQUIRED FOR A COMPLETE AND OPERABLE SYSTEM
2. PROVIDE TWO-PIECE NON-METALLIC SURFACE RACEWAY SYSTEM WITH TWO COMPARTMENTS FOR ROUTING POWER AND DATA SYSTEM CONDUCTORS (WIREMOLD #5400 SERIES OR EQUAL) COMPLETE WITH DUPLEX RECEPTACLE AND DATA OUTLETS AT LOCATIONS AS SHOWN ON PLAN. MOUNT AT 2'-0" A.F.F. TO TOP OF RACEWAY.
3. PROVIDE 2"C.O. FROM TEACHERS DESK STUBBED TO THE JUNCTION BOX IN THE CEILING, FOR FUTURE CEILING MOUNTED PROJECTOR.
4. DISCONNECT AND RELOCATE EXISTING TELEPHONE HANDSET, AND OUTLET TO NEW LOCATION SHOWN IN ROOM. PROVIDE ALL CONDUIT, WIRING, AND CONNECTS AS REQUIRED FOR A COMPLETE AND OPERABLE SYSTEM.
5. PROVIDE NEW CAT 5E OUTLET AND CABLING. VERIFY EXACT LOCATION IN FIELD.
6. PROVIDE 14 CAT 5E DATA CALBES IN 2" CONDUIT TO ASSOCIATED IDF RACK. ROUTE CONDUIT BELOW GRADE WHERE INDICATED.
7. ROUTE CONDUIT FROM BELOW GRADE, CONCEALED IN WALL AS REQUIRED TO PERFORM WORK INDICATED.

KEY PLAN

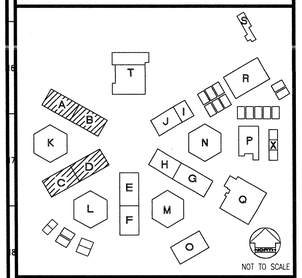

NOT TO SCALE

REVISED MAY 12 2004

IDENTIFICATION STAMP
DIV. OF THE STATE ARCHITECT
OFFICE OF REGULATION SERVICES
FILE NO. 19-H51
APPL. NO. 03-106434
AC. ____ FLS. NC SS. ____
DATE ____

Dougherty + Dougherty
Architecture • Planning • Interior Design
3194-D Airport Loop Drive
Costa Mesa, CA 92626
(714) 425-0277
(714) 425-0278

Copyright © 2002 Dougherty + Dougherty

GLP Engineering, Inc.
Mechanical • Electrical • Plumbing
3185-C Airway Avenue
Costa Mesa, CA 92626-4601
Telephone (714) 751-1851
Fax (714) 751-4216

Architect Seal

Consultant Seal

LA MIRADA HIGH SCHOOL MODERNIZATION
NORWALK - LA MIRADA UNIFIED SCHOOL DISTRICT
13520 ADELFA DRIVE LA MIRADA, CA 90638

CLASSROOM BUILDINGS A-B & C-D SIGNAL PLANS

Date:	05-11-04
Job:	20237.50
Scale:	AS NOTED
Drawn:	
Revisions:	
1	12-01-03

E301

P:\Clients\Dist\Norwalk-LaMirada SD\La Mirada HS Modernization 105.045\Drawings\105045x301.dwg May 11, 2004 - 3:05pm

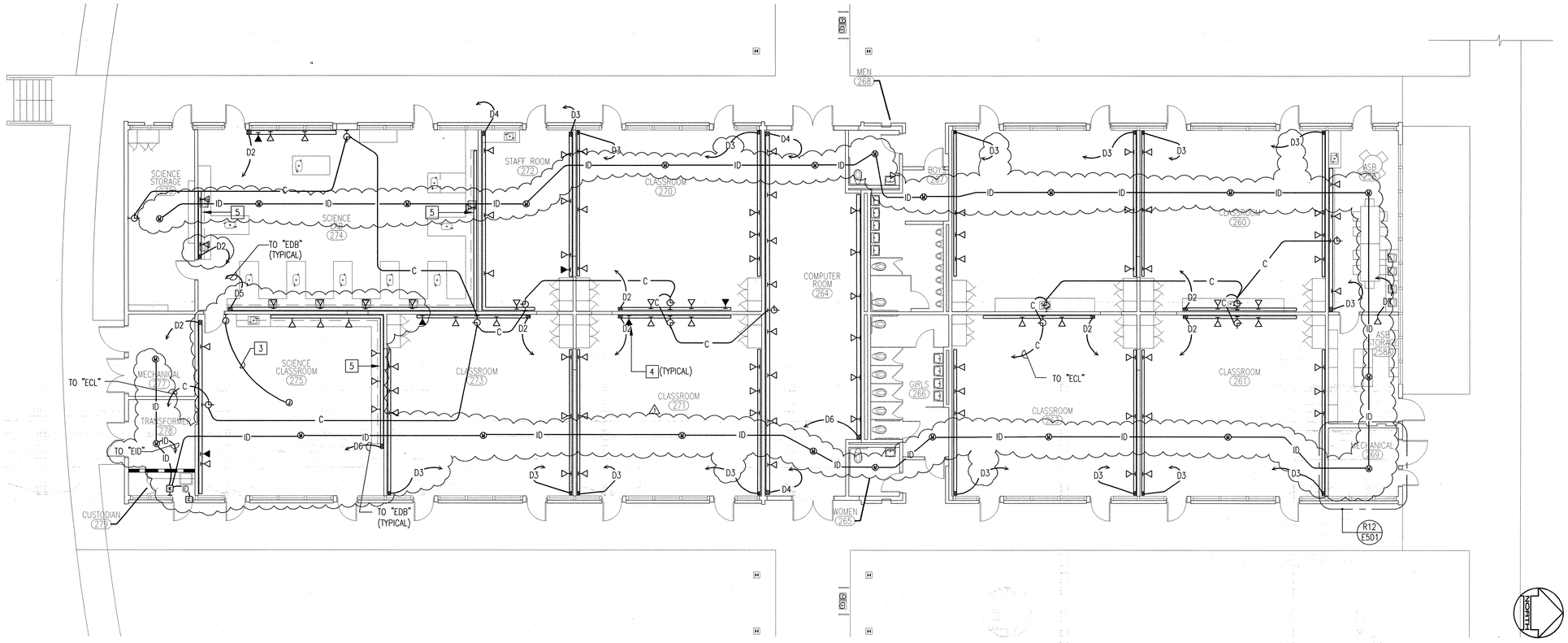

BUILDING E-F SIGNAL PLAN
250 BUILDING
A10
1/8"=1'-0"

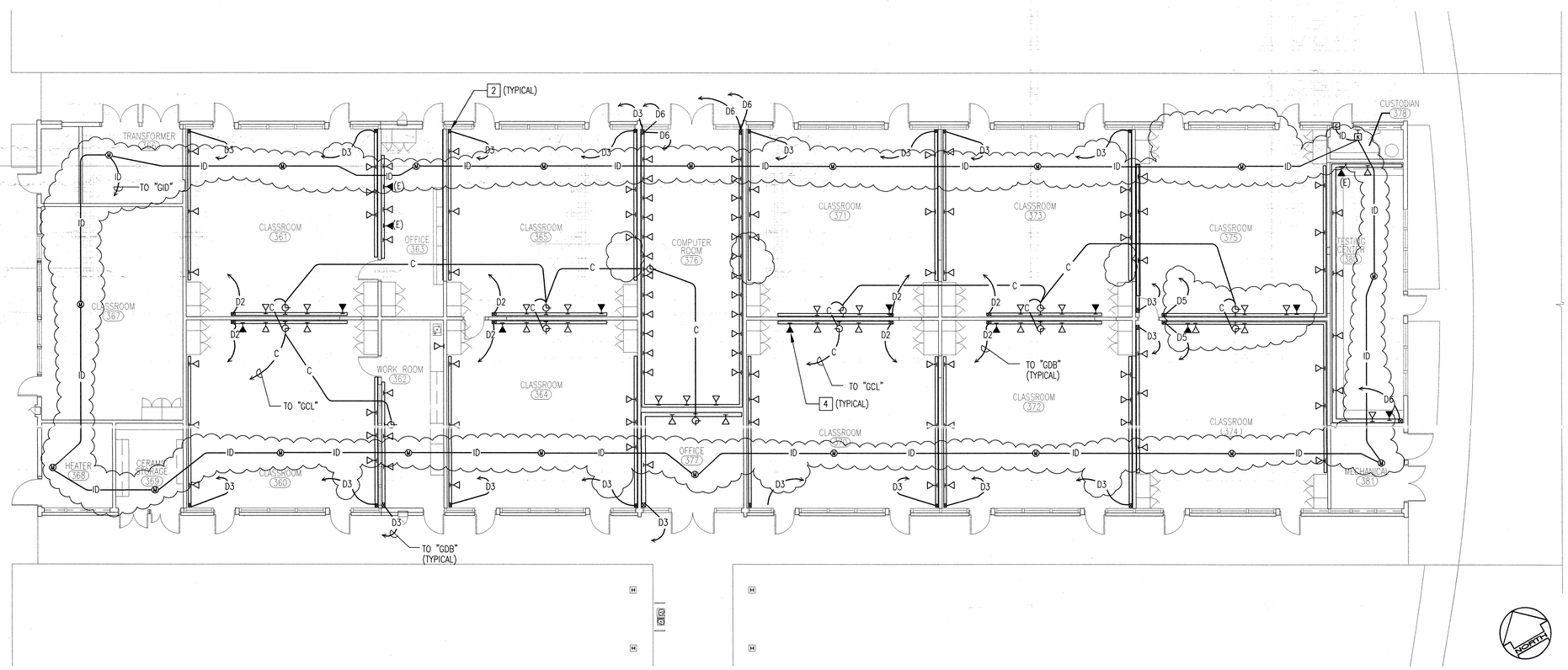

BUILDING G-H SIGNAL PLAN
350 BUILDING
A19
1/8"=1'-0"

PLAN NOTES

1. PROVIDE COMPLETE SIGNAL SYSTEMS IN CLASSROOMS INCLUDING ALL DATA OUTLETS, SPEAKERS, CLOCKS, TV OUTLETS, TELEPHONE OUTLETS, TELEPHONE HANDSETS, RACEWAYS, JUNCTION BOXES, CONDUIT, WIRING, AND CONNECTIONS PER TYPICAL CLASSROOM INDICATED AS REQUIRED FOR A COMPLETE AND OPERABLE SYSTEM
2. PROVIDE TWO-PIECE NON-METALLIC SURFACE RACEWAY SYSTEM WITH TWO COMPARTMENTS FOR ROUTING POWER AND DATA SYSTEM CONDUCTORS (WIREMOLD #5400 SERIES OR EQUAL) COMPLETE WITH DUPLEX RECEPTACLE AND DATA OUTLETS AT LOCATIONS AS SHOWN ON PLAN. MOUNT AT 2'-0" A.F.F. TO TOP OF RACEWAY.
3. PROVIDE 2"C.O. FROM TEACHERS DESK STUBBED TO THE JUNCTION BOX IN THE CEILING, FOR FUTURE CEILING MOUNTED PROJECTOR.
4. PROVIDE NEW CAT 5E OUTLET AND CABLING. VERIFY EXACT LOCATION IN FIELD.
5. PROVIDE TWO-PIECE NON-METALLIC SURFACE RACEWAY SYSTEM WITH TWO COMPARTMENTS FOR ROUTING POWER AND DATA SYSTEM CONDUCTORS (WIREMOLD #5400 SERIES OR EQUAL) COMPLETE WITH DUPLEX RECEPTACLE AND DATA OUTLETS AT LOCATIONS AS SHOWN ON PLAN. MOUNT AT 6" ABOVE COUNTER SPLASH.

KEY PLAN

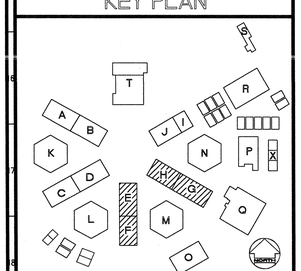

REVISED PLANS
MAY 12 2004
IDENTIFICATION STAMP
DIV. OF THE STATE ARCHITECT
OFFICE OF REGULATION SERVICES
FILE NO. 19-H51
APPL. NO. 03-106434
AC.____ FLS. NT SS.____
DATE____

Dougherty ■ Dougherty
Architecture • Planning • Interior Design
3194-D Airport Loop Drive
Costa Mesa, CA 92626
(714) 427-1017

Copyright © 2002 Dougherty + Dougherty

GLP Engineering, Inc.
Mechanical and Electrical Engineers
3185-C Airway Avenue
Costa Mesa, CA 92626-4601
Telephone (714) 751-1251
Fax (714) 751-4219

LICENSED ARCHITECT NO. C-8824 REGISTERED PROFESSIONAL ENGINEER STATE OF CALIFORNIA EXP. JULY 1, 2004
Architect Seal

REGISTERED PROFESSIONAL ENGINEER No. E 17252 EXP. 6-30-04 ELECTRICAL STATE OF CALIFORNIA
Consultant Seal

LA MIRADA HIGH SCHOOL
MODERNIZATION
NORWALK - LA MIRADA UNIFIED SCHOOL DISTRICT
13520 ADELFA DRIVE LA MIRADA, CA 90638

CLASSROOM
BUILDINGS E-F & G-H
SIGNAL PLANS

Date:	05-11-04
Job:	20237.50
Scale:	AS NOTED
Drawn:	
Revisions:	
1	12-01-03

E302

P:\Clients\DMJ\Norwalk-LaMirada SD\La Mirada HS Modernization 105.045\Drawings\105045e302.dwg May 11, 2004 - 3:05pm

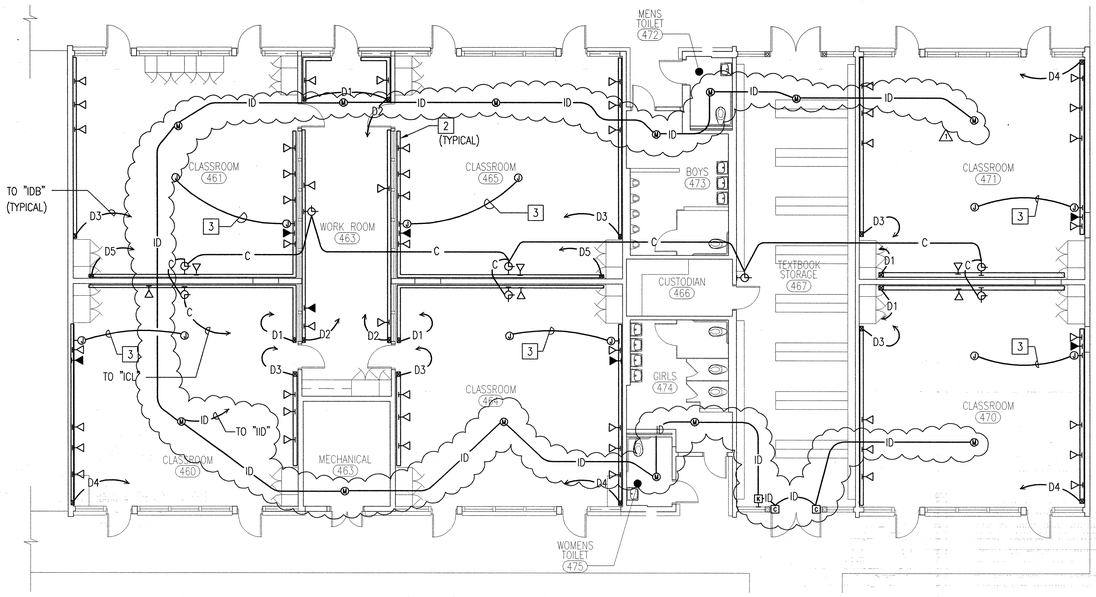

BUILDING I-J SIGNAL PLAN

150 BUILDING

A10

1/8"=1'-0"

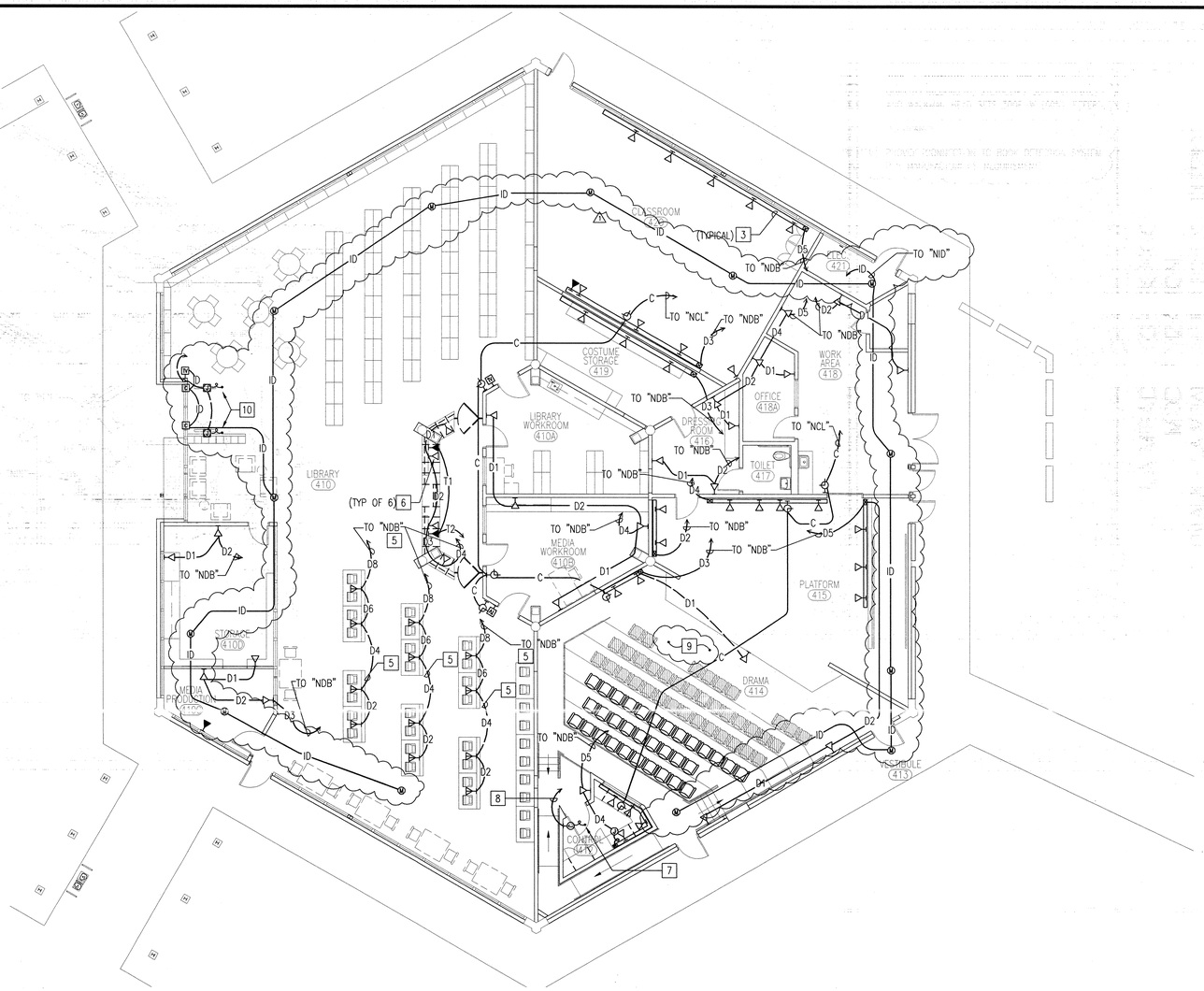

BUILDING N SIGNAL PLAN

LIBRARY/DRAMA BUILDING

A19

1/8"=1'-0"

PLAN NOTES

1. PROVIDE COMPLETE SIGNAL SYSTEMS IN CLASSROOMS INCLUDING ALL DATA OUTLETS, SPEAKERS, CLOCKS, TV OUTLETS, TELEPHONE OUTLETS, TELEPHONE HANDSETS, RACEWAYS, JUNCTION BOXES, CONDUIT, WIRING, AND CONNECTIONS PER TYPICAL CLASSROOM INDICATED AS REQUIRED FOR A COMPLETE AND OPERABLE SYSTEM
2. PROVIDE TWO-PIECE NON-METALLIC SURFACE RACEWAY SYSTEM WITH TWO COMPARTMENTS FOR ROUTING POWER AND DATA SYSTEM CONDUCTORS (WIREMOLD #5400 SERIES OR EQUAL) COMPLETE WITH DUPLEX RECEPTACLE AND DATA OUTLETS AT LOCATIONS AS SHOWN ON PLAN. MOUNT AT 2'-0" A.F.F. TO TOP OF RACEWAY.
3. PROVIDE 2"C.O. FROM TEACHERS DESK STUBBED TO THE JUNCTION BOX IN THE CEILING, FOR FUTURE CEILING MOUNTED PROJECTOR.
4. PROVIDE NEW CAT 5E OUTLET AND CABLING. VERIFY EXACT LOCATION IN FIELD.
5. ROUTE CONDUIT BELOW GRADE AS REQUIRED TO PERFORM WORK INDICATED.
6. MOUNT IN CASEWORK AS DIRECTED BY ARCHITECT.
7. PROVIDE AND INSTALL ASSISTIVE LISTENING ANTENNA.
8. PROVIDE 3/4"C. WITH SPECIFIED CABLING BACK TO PUBLIC ADDRESS RACK.
9. PROVIDE AN ASSISTIVE LISTENING SYSTEM, PHONIC EAR PE 560T BASE STATION OR EQUAL IN EXISTING RACK. ANTENNA FOR ASSISTIVE LISTENING SYSTEM SHALL BE MOUNTED WITHIN THE SPACE IN AN INCONSPICUOUS LOCATION. TYPE OF ANTENNA SHALL BE DETERMINED BY TRANSMISSION RANGE AND FREQUENCY REQUIRED BY THE SPACE, PHONIC EAR AT560- SERIES OR EQUAL. PROVIDE ANTENNA CABLE TYPE AND SIZE AS REQUIRED. ASSISTIVE LISTENING SYSTEM TWO CHANNEL RECEIVERS, PHONIC EAR PE350FSR, WITH RECHARGEABLE BATTERIES, LISTENING ACCESSORIES, AND CHARGER(S) PE300C SHALL BE PROVIDED TO EQUAL 4% OF THE TOTAL OCCUPANCY UP TO 500 AND 1% OF THE TOTAL OCCUPANCY IN EXCESS OF 500. LISTENING ACCESSORIES SHALL BE TELELOOPS 300R-L (QUANTITY TO EQUAL 20% OF THE TOTAL QUANTITY REQUIRED), STETOCLIPS 300R-ST (20%) AND WALKMAN HEAD SETS 300R-W (60%). REFER TO ARCHITECTURAL FLOOR PLANS FOR MAXIMUM OCCUPANCY.
10. PROVIDE CONNECTION TO BOOK DETECTION SYSTEM PER MANUFACTURER'S REQUIREMENTS.

KEY PLAN

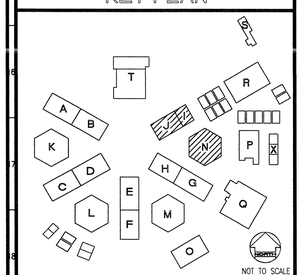

REVISED MAY 12 2004

IDENTIFICATION STAMP
DIV. OF THE STATE ARCHITECT
OFFICE OF REGULATION SERVICES
FILE NO. 19-H51
APPL. NO. 03-106434
AC.____ FLS. NC SS.____
DATE____

Dougherty ■ Dougherty
Architecture • Planning • Interior Design
3194-D Airport Loop Drive
Costa Mesa, CA 92626
(714) 427-0277

Copyright © 2002 Dougherty + Dougherty

GLP Engineering, Inc.
Mechanical • Electrical • Plumbing
3185-C Airway Avenue
Costa Mesa, CA 92626-4601
Telephone (714) 751-1851
Fax (714) 751-4216

LICENSED PROFESSIONAL ENGINEER REGISTERED PROFESSIONAL ENGINEER NO. C-8824 STATE OF CALIFORNIA

Architect Seal

REGISTERED PROFESSIONAL ENGINEER C 17232 EXP. 6-30-04 ELECTRICAL STATE OF CALIFORNIA

Consultant Seal

LA MIRADA HIGH SCHOOL MODERNIZATION

NORWALK - LA MIRADA UNIFIED SCHOOL DISTRICT
13520 ADELFA DRIVE LA MIRADA, CA 90638

CLASSROOM BUILDINGS I-J & N SIGNAL PLANS

Date:	05-11-04
Job:	20237.50
Scale:	AS NOTED
Drawn:	
Revisions:	
1	12-01-03

E303

P:\Clients\D&F\Norwalk-LaMirada SD\La Mirada HS Modernization 105045\Drawings\105045x301.dwg May 11, 2004 - 3:05pm

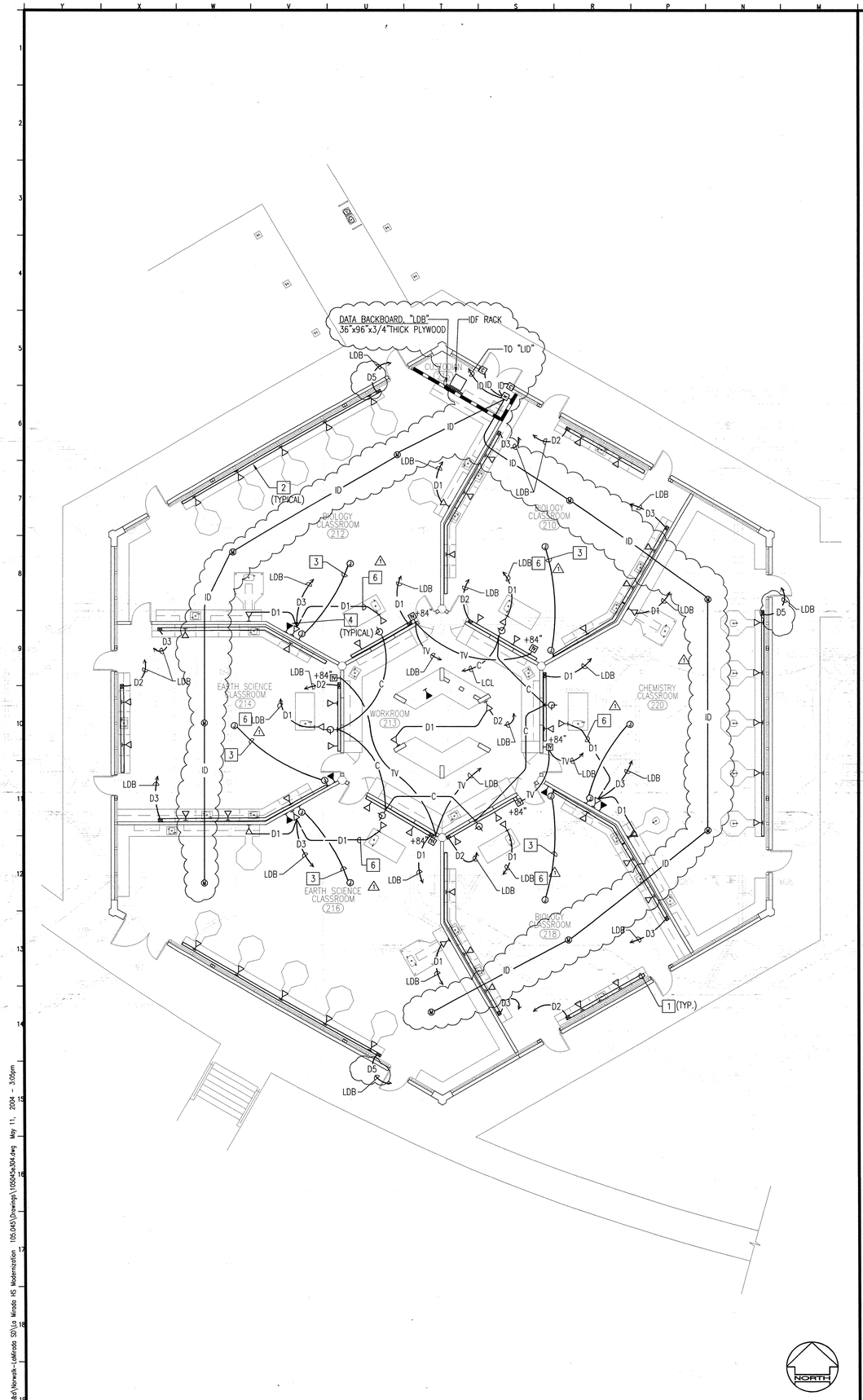

BUILDING L SIGNAL PLAN — M19

200 BUILDING — 1/8"=1'-0"

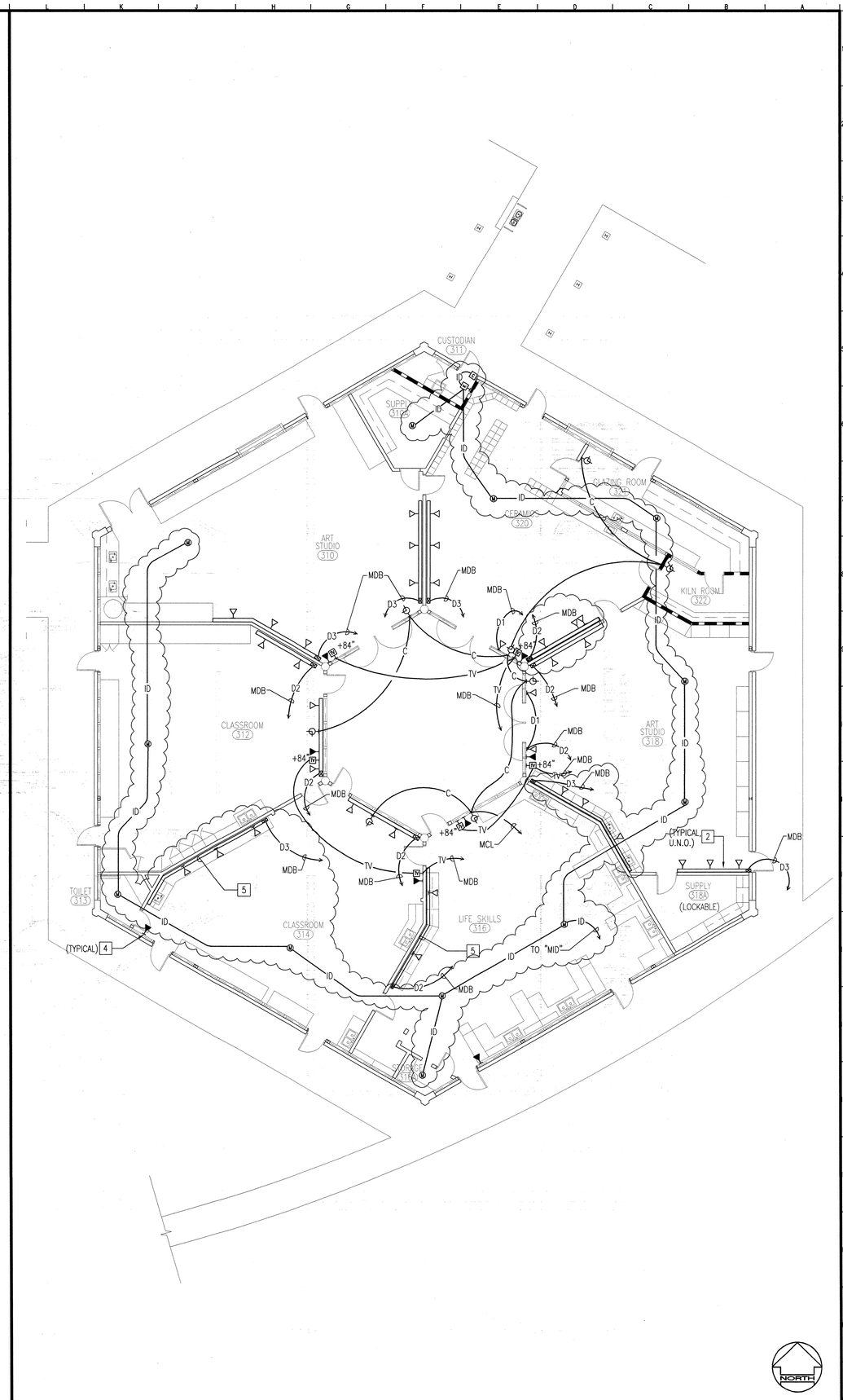

BUILDING M SIGNAL PLAN — A19

300 BUILDING — 1/8"=1'-0"

PLAN NOTES

1. RELOCATE EXISTING TELEPHONE TO NEW TEACHER'S DESK LOCATION. INTERCEPT AND EXTEND EXISTING CONDUIT AS REQUIRED. VERIFY LOCATION PRIOR TO ROUGH-IN.
2. PROVIDE TWO-PIECE NON-METALLIC SURFACE RACEWAY SYSTEM WITH TWO COMPARTMENTS FOR ROUTING POWER AND DATA SYSTEM CONDUCTORS (WIREMOLD #5400 SERIES OR EQUAL) COMPLETE WITH DUPLEX RECEPTACLE AND DATA OUTLETS AT LOCATIONS AS SHOWN ON PLAN. MOUNT AT 2'-0" A.F.F. TO TOP OF RACEWAY.
3. PROVIDE 2"C.O. FROM TEACHERS DESK STUBBED TO THE JUNCTION BOX IN THE CEILING, FOR FUTURE CEILING MOUNTED PROJECTOR.
4. PROVIDE NEW CAT 5E OUTLET AND CABLING. VERIFY EXACT LOCATION IN FIELD.
5. PROVIDE TWO-PIECE NON-METALLIC SURFACE RACEWAY SYSTEM WITH TWO COMPARTMENTS FOR ROUTING POWER AND DATA SYSTEM CONDUCTORS (WIREMOLD #5400 SERIES OR EQUAL) COMPLETE WITH DUPLEX RECEPTACLE AND DATA OUTLETS AT LOCATIONS AS SHOWN ON PLAN. MOUNT ABOVE SPLASH, VERIFY EXACT HEIGHT WITH ARCHITECT PRIOR TO ROUGH-IN.
6. ROUTE CONDUIT BELOW GRADE AS REQUIRED TO PREFORM WORK INDICATED.

KEY PLAN

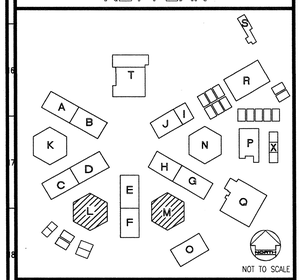

REVISED MAY 12 2004

IDENTIFICATION STAMP
DIV. OF THE STATE ARCHITECT
OFFICE OF REGULATION SERVICES
FILE NO. 19-H51
APPL. NO. 03-106434
AC.____ FLS. NV SS.____
DATE____

Dougherty ■■ Dougherty
Architecture • Planning • Interior Design
3194-D Airport Loop Drive
Costa Mesa, CA 92626
(714) 427-0277

Copyright © 2002 Dougherty + Dougherty

GLP Engineering, Inc.
Mechanical and Electrical Engineers
3185-C Airway Avenue
Costa Mesa, CA 92626-4601
Telephone (714) 751-1851
Fax (714) 751-4216

LICENSED ARCHITECT — REGISTERED PROFESSIONAL ENGINEER — Architect Seal

Consultant Seal

LA MIRADA HIGH SCHOOL
MODERNIZATION
NORWALK - LA MIRADA UNIFIED SCHOOL DISTRICT
13520 ADELFA DRIVE LA MIRADA, CA 90638

CLASSROOM BUILDINGS L & M SIGNAL PLANS

Date:	05-11-04
Job:	20237.50
Scale:	AS NOTED
Drawn:	
Revisions:	
1	12-01-03

E304

P:\Clients\Dougherty\Norwalk-LaMirada SD\La Mirada HS Modernization 105.045\Drawings\105045304.dwg May 11, 2004 - 3:05pm

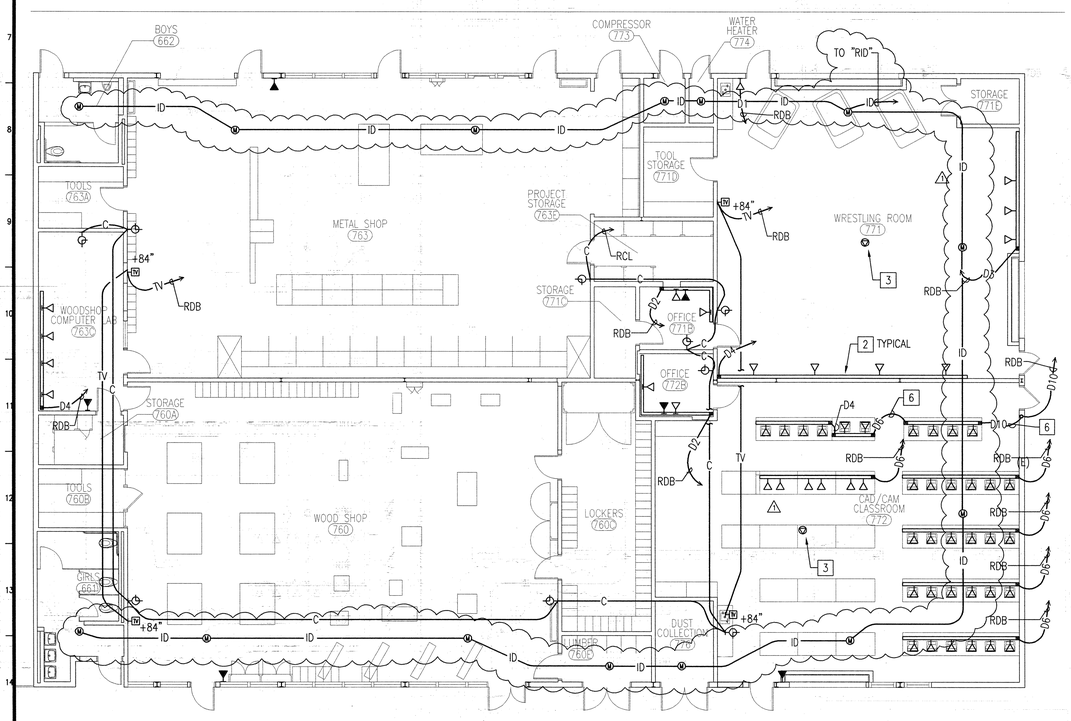

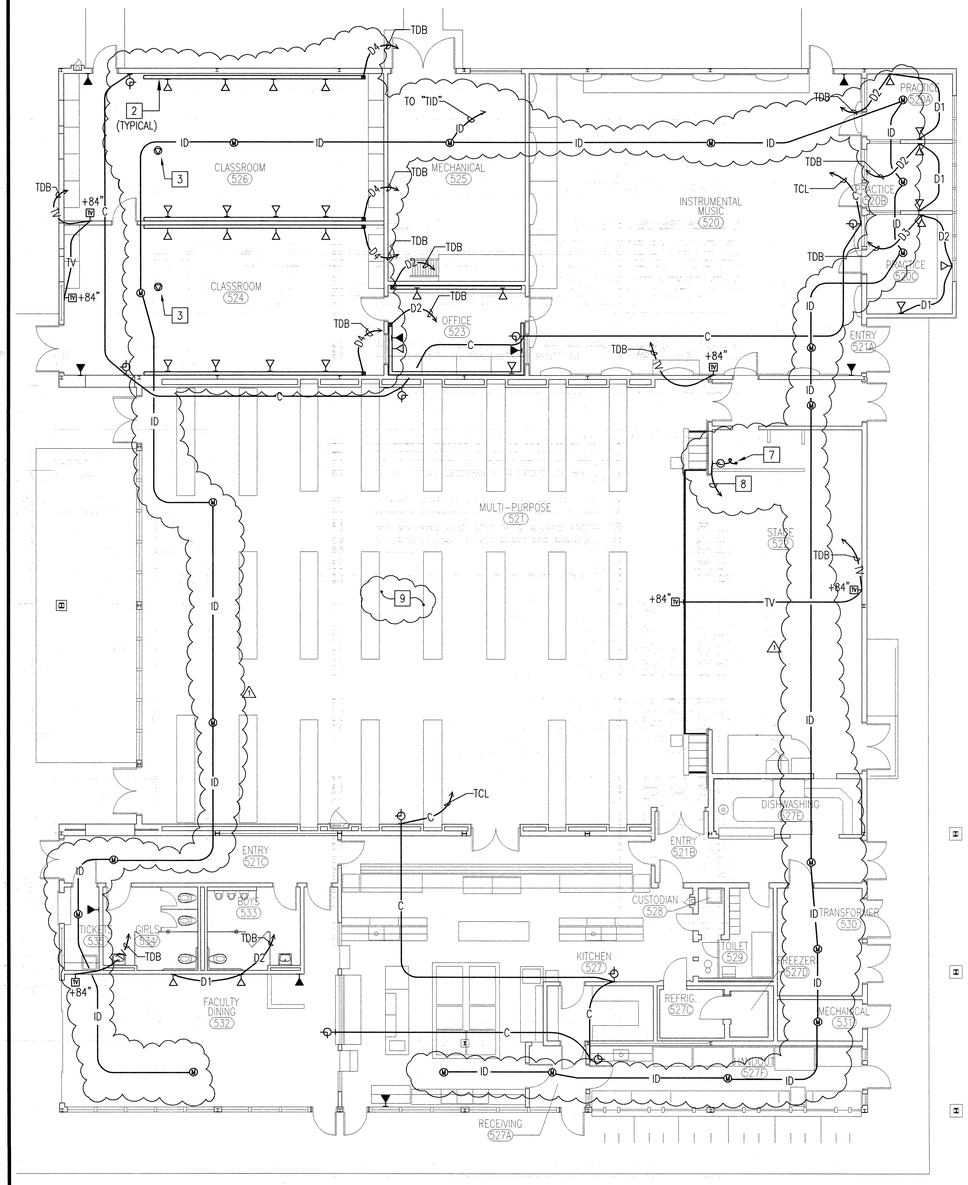

PLAN NOTES

1. PROVIDE COMPLETE SIGNAL SYSTEMS IN CLASSROOMS INCLUDING ALL DATA OUTLETS, SPEAKERS, CLOCKS, TV OUTLETS, TELEPHONE OUTLETS, TELEPHONE HANDSETS, RACEWAYS, JUNCTION BOXES, CONDUIT, WIRING, AND CONNECTIONS PER TYPICAL CLASSROOM INDICATED AS REQUIRED FOR A COMPLETE AND OPERABLE SYSTEM
2. PROVIDE TWO-PIECE NON-METALLIC SURFACE RACEWAY SYSTEM WITH TWO COMPARTMENTS FOR ROUTING POWER AND DATA SYSTEM CONDUCTORS (WIREMOLD #5400 SERIES OR EQUAL) COMPLETE WITH DUPLEX-RECEPTACLE AND DATA OUTLETS AT LOCATIONS AS SHOWN ON PLAN. MOUNT AT 2'-0" A.F.F. TO TOP OF RACEWAY.
3. PROVIDE 2"C.O. FROM TEACHERS DESK STUBBED TO THE JUNCTION BOX IN THE CEILING, FOR FUTURE CEILING MOUNTED PROJECTOR.
4. DISCONNECT AND RELOCATE EXISTING TELEPHONE HANDSET, AND OUTLET TO NEW LOCATION SHOWN IN ROOM. PROVIDE ALL CONDUIT, WIRING, AND CONNECTS AS REQUIRED FOR A COMPLETE AND OPERABLE SYSTEM.
5. PROVIDE NEW CAT 5E OUTLET AND CABLING AT EXISTING TELEPHONE LOCATION. VERIFY EXACT LOCATION IN FIELD.
6. ROUTE CONDUIT BELOW GRADE AS REQUIRED TO PREFORM WORK INDICATED.
7. PROVIDE AND INSTALL ASSISTIVE LISTENING ANTENNA.
8. PROVIDE 3/4"C. WITH SPECIFIED CABLING BACK TO PUBLIC ADDRESS RACK.
9. PROVIDE AN ASSISTIVE LISTENING SYSTEM, PHONIC EAR PE 560T BASE STATION OR EQUAL IN EXISTING RACK. ANTENNA FOR ASSISTIVE LISTENING SYSTEM SHALL BE MOUNTED WITHIN THE SPACE IN AN INCONSPICUOUS LOCATION. TYPE OF ANTENNA SHALL BE DETERMINED BY TRANSMISSION RANGE AND FREQUENCY REQUIRED BY THE SPACE, PHONIC EAR AT560- SERIES OR EQUAL. PROVIDE ANTENNA CABLE TYPE AND SIZE AS REQUIRED. ASSISTIVE LISTENING SYSTEM TWO CHANNEL RECEIVERS, PHONIC EAR PE350FSR, WITH RECHARGEABLE BATTERIES, LISTENING ACCESSORIES, AND CHARGER(S) PE300C SHALL BE PROVIDED TO EQUAL 4% OF THE TOTAL OCCUPANCY UP TO 500 AND 1% OF THE TOTAL OCCUPANCY IN EXCESS OF 500. LISTENING ACCESSORIES SHALL BE TELELOOPS 300R-L (QUANTITY TO EQUAL 20% OF THE TOTAL QUANTITY REQUIRED), STETOCLIPS 300R-ST (20%) AND WALKMAN HEAD SETS 300R-W (60%). REFER TO ARCHITECTURAL FLOOR PLANS FOR MAXIMUM OCCUPANCY.

KEY PLAN

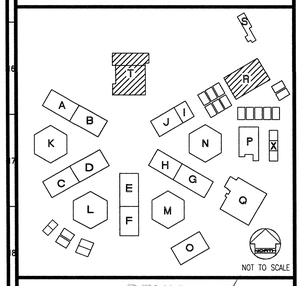

REVISED MAY 12 2004

IDENTIFICATION STAMP
DIV. OF THE STATE ARCHITECT
OFFICE OF REGULATION SERVICES
FILE NO. 19-H51
APPL. NO. 03-106434
AC ____ FLS. NL SS ____
DATE ____

Dougherty ■ Dougherty
Architecture • Planning • Interior Design
3194-D Airport Loop Drive
Costa Mesa, CA 92626
(714) 425-0272

Copyright © 2002 Dougherty + Dougherty

GLP Engineering, Inc.
Mechanical and Electrical Engineers
3185-C Airway Avenue
Costa Mesa, CA 92626-4601
Telephone (714) 751-1851
Fax (714) 751-4216

LICENSED ARCHITECT
STATE OF CALIFORNIA
NO. C-8824
REGISTERED PROFESSIONAL ENGINEER
ELECTRICAL
NO. E 17252
EXP. 6-30-04
STATE OF CALIFORNIA

Architect Seal

Consultant Seal

LA MIRADA HIGH SCHOOL
MODERNIZATION
NORWALK - LA MIRADA UNIFIED SCHOOL DISTRICT
13520 ADELFA DRIVE LA MIRADA, CA 90638

BUILDINGS
R & T
SIGNAL PLANS

Date:	05-11-04
Job:	20237.50
Scale:	AS NOTED
Drawn:	
Revisions:	
1	12-01-03

E305

BUILDING R SIGNAL PLAN — L19
SHOP BUILDING — 1/8"=1'-0"

BUILDING T SIGNAL PLAN — A19
MULTI-PURPOSE BUILDING — 1/8"=1'-0"

P:\Clients\Ldsd\Norwalk-LaMirada SD\La Mirada HS Modernization 105.0453\Drawings\105045305.dwg May 11, 2004 - 3:04pm

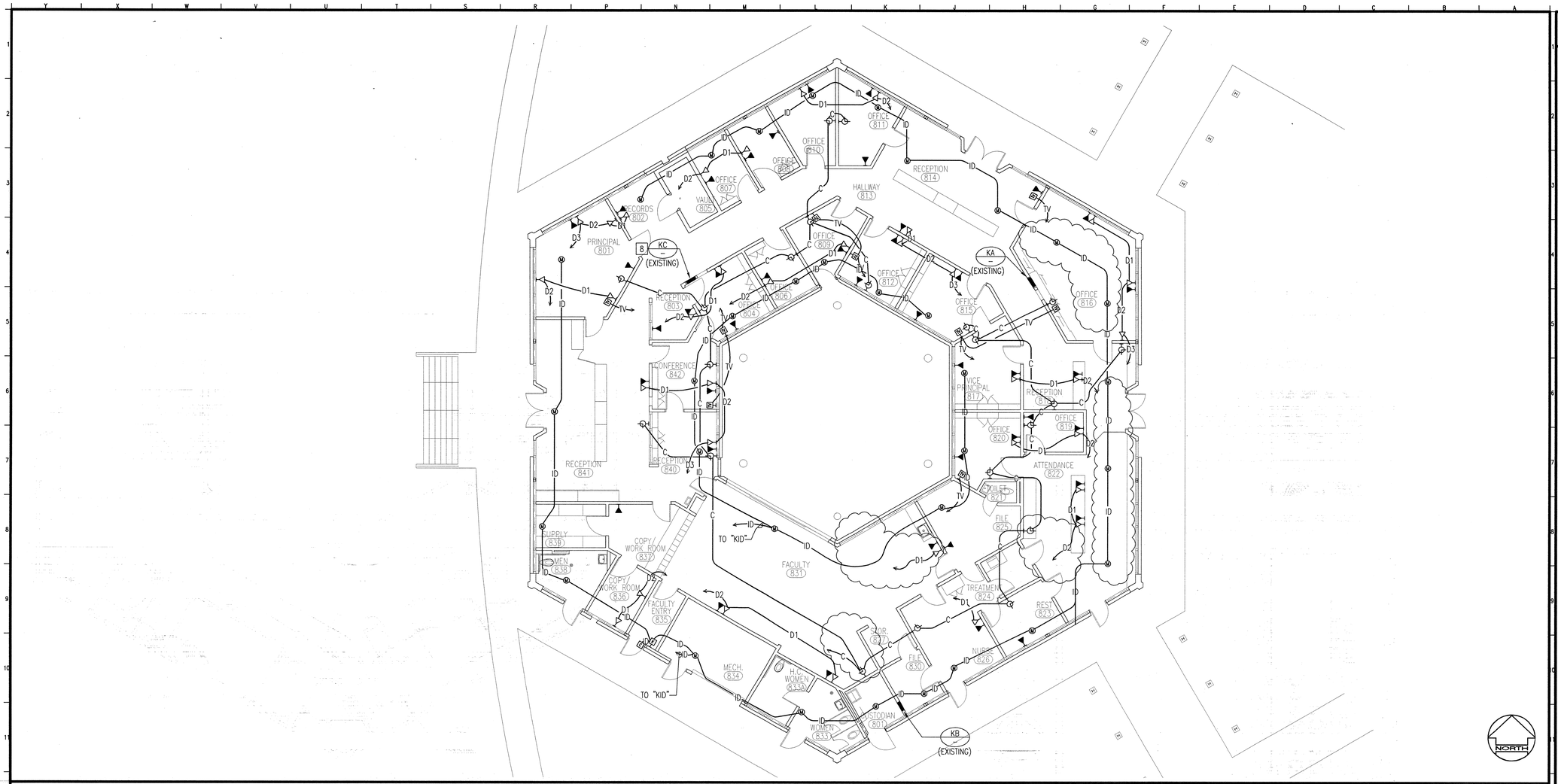

BUILDING K SIGNAL PLAN

ADMINISTRATION BUILDING

A19

1/8"=1'-0"

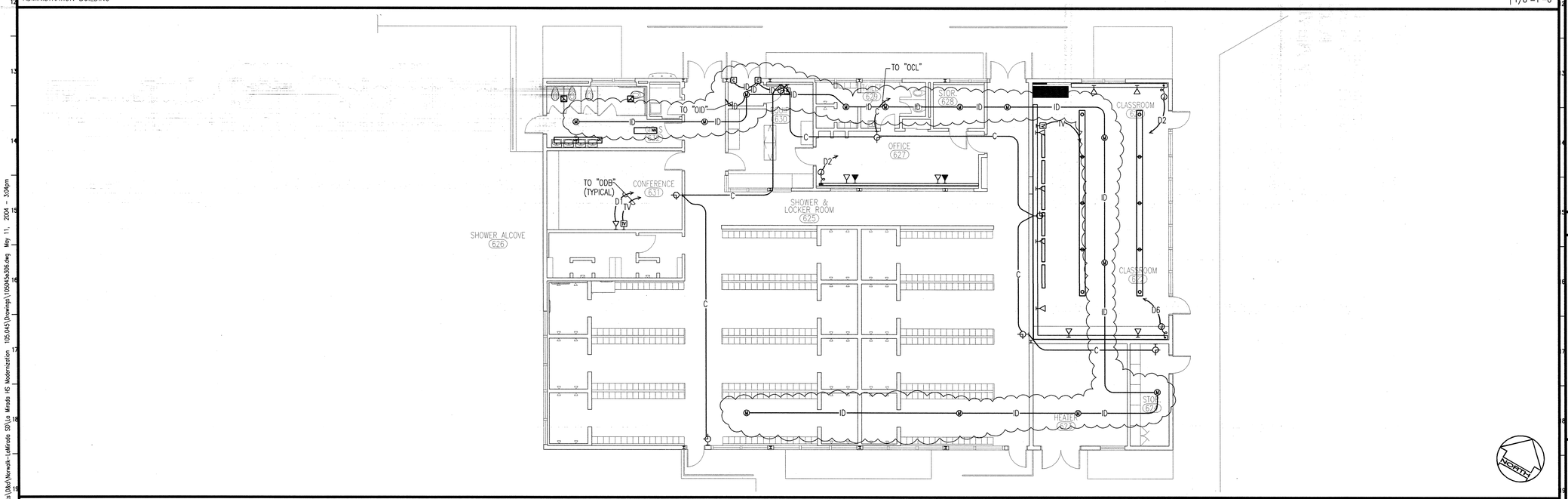

BUILDING O SIGNAL PLAN

GIRLS LOCKER BUILDING

A19

1/8"=1'-0"

PLAN NOTES

1. PROVIDE TWO-PIECE NON-METALLIC SURFACE RACEWAY SYSTEM WITH TWO COMPARTMENTS FOR ROUTING POWER AND DATA SYSTEM CONDUCTORS (WIREMOLD #5400 SERIES OR EQUAL) COMPLETE WITH DUPLEX RECEPTACLE AND DATA OUTLETS AT LOCATIONS AS SHOWN ON PLAN. MOUNT AT 2'-0" A.F.F. TO TOP OF RACEWAY.
2. DISCONNECT AND RELOCATE EXISTING TELEPHONE HANDSET, AND OUTLET TO NEW LOCATION SHOWN IN ROOM. PROVIDE ALL CONDUIT, WIRING, AND CONNECTS AS REQUIRED FOR A COMPLETE AND OPERABLE SYSTEM.
3. PROVIDE NEW CAT 5E OUTLET AND CABLING AT EXISTING TELEPHONE LOCATION. VERIFY EXACT LOCATION IN FIELD.

KEY PLAN

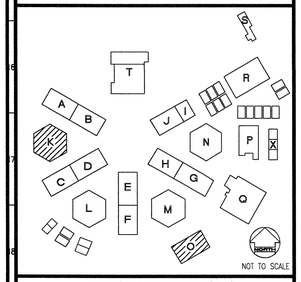

REVISED MAY 12 2004

IDENTIFICATION STAMP
DIV. OF THE STATE ARCHITECT
OFFICE OF REGULATION SERVICES
FILE NO. 19-H51
APPL. NO. 03-106434
AC. ____ FLS. NLT SS. ____
DATE ____

Dougherty ■ Dougherty
Architecture • Planning • Interior Design
3194-D Airport Loop Drive
Costa Mesa, CA 92626
(714) 425-0227
(714) 425-0277

Copyright © 2002 Dougherty + Dougherty

GLP Engineering, Inc.
Mechanical and Electrical Engineers
3185-C Airway Avenue
Costa Mesa, CA 92626-4601
Telephone (714) 751-1851
Fax (714) 751-4216

Architect Seal

Consultant Seal

LA MIRADA HIGH SCHOOL MODERNIZATION

NORWALK - LA MIRADA UNIFIED SCHOOL DISTRICT
13520 ADELFA DRIVE LA MIRADA, CA 90638

BUILDINGS K & O SIGNAL PLANS

Date:	05-11-04
Job:	20237.50
Scale:	AS NOTED
Drawn:	
Revisions:	
1	12-01-03

E306

P:\Clients\Dist\Norwalk-LaMirada SD\La Mirada HS Modernization 105.045\Drawings\105045e306.dwg May 11, 2004 - 3:04pm

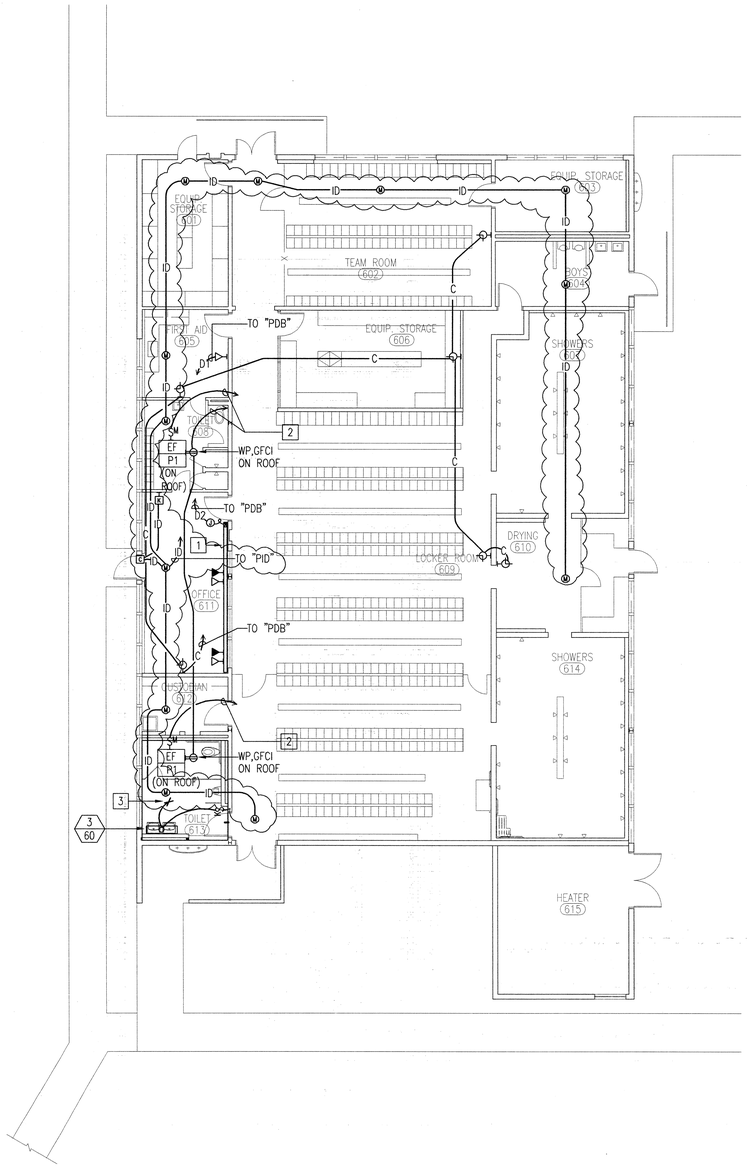

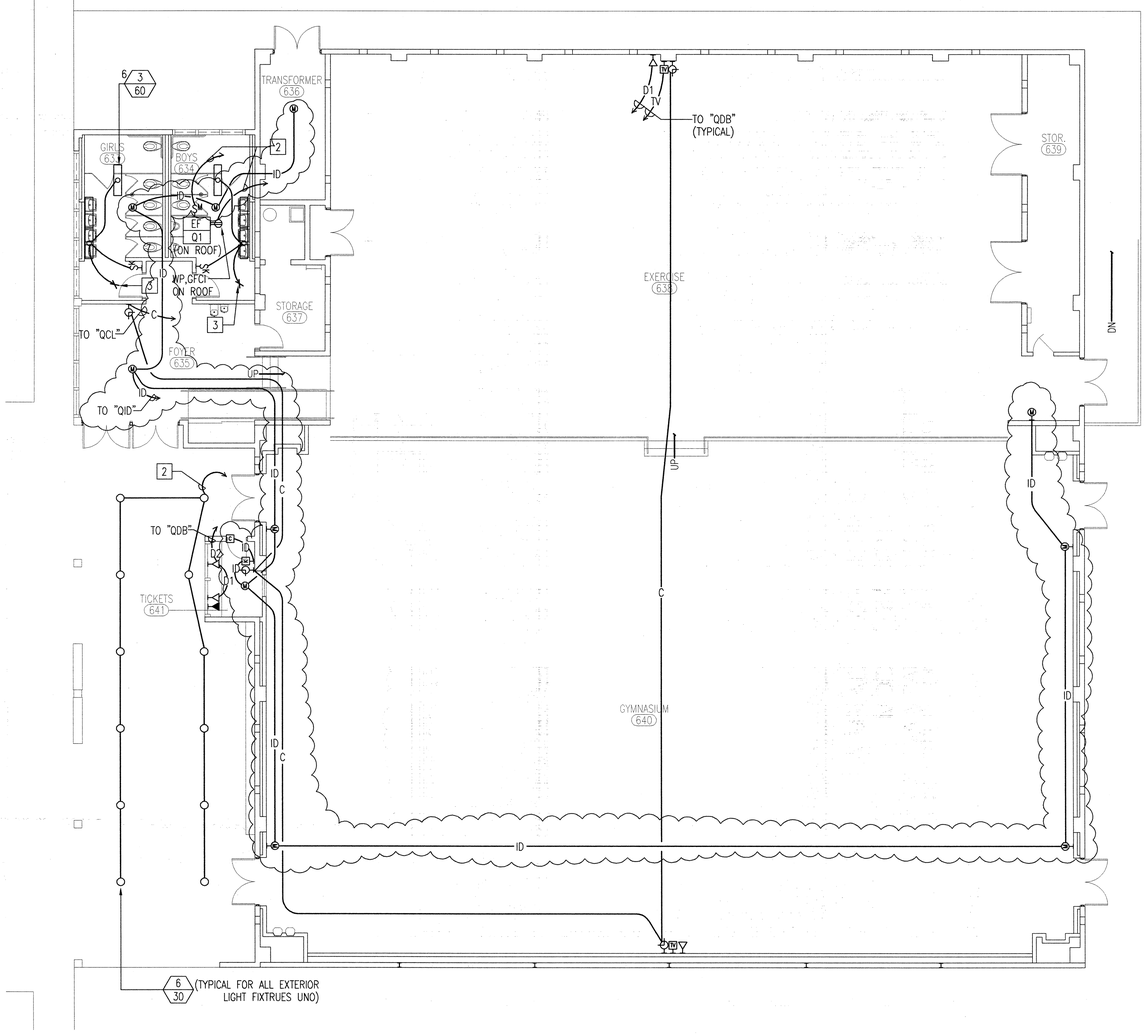

PLAN NOTES

1. PROVIDE TWO-PIECE NON-METALLIC SURFACE RACEWAY SYSTEM WITH TWO COMPARTMENTS FOR ROUTING POWER AND DATA SYSTEM CONDUCTORS (WIREMOLD #5400 SERIES OR EQUAL) COMPLETE WITH DUPLEX RECEPTACLE AND DATA OUTLETS AT LOCATIONS AS SHOWN ON PLAN. MOUNT AT 2'-0" A.F.F. TO TOP OF RACEWAY.
2. 2#12 AND 1#12(GRD) TO NEAREST EXISTING 120V BUILDING PANELBOARD. RPOVIDE ONE 20A, 1P CIRCUIT BREAKER IN SPACE OF EXISTING PANELBOARD. MATCH RATINGS OF EXISTING DEVICES. PROVIDE ALL MOUNTING HARDWARE, CONDUIT, WIRING, CONTROLS, AND CONNECTIONS REQUIRED FOR A COMPLETE AND OPERABLE SYSTEM.
3. INTERCEPT EXISTING LIGHTING CIRCUIT AND EXTEND AS INDICATED TO NEW FIXUTRES.

KEY PLAN

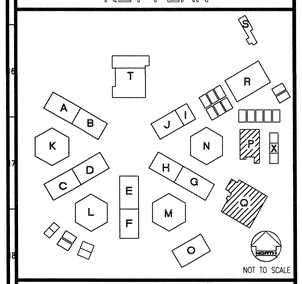

REVISED MAY 12 2004

IDENTIFICATION STAMP
DIV. OF THE STATE ARCHITECT
OFFICE OF REGULATION SERVICES
FILE NO. 19-H51
APPL. NO. 03-106434
AC ____ FLS ____ SS ____
DATE ____

Dougherty ■ Dougherty
Architecture • Planning • Interior Design
3194-D Airport Loop Drive
Costa Mesa, CA 92626
(714) 427-0277

Copyright © 2002 Dougherty + Dougherty

GLP Engineering, Inc.
Mechanical and Electrical Engineers
3185-C Airway Avenue
Costa Mesa, CA 92626-4601
Telephone (714) 751-1851
Fax (714) 751-4216

Architect Seal

Consultant Seal

LA MIRADA HIGH SCHOOL
MODERNIZATION
NORWALK - LA MIRADA UNIFIED SCHOOL DISTRICT
13520 ADELFA DRIVE LA MIRADA, CA 90638

BUILDINGS
P & Q
ELECTRICAL PLANS

Date:	05-11-04
Job:	20237.50
Scale:	AS NOTED
Drawn:	
Revisions:	
1	12-01-03

E307

BUILDING P ELECTRICAL PLAN — P19
BOYS LOCKER ROOM BUILDING — 1/8"=1'-0"

BUILDING Q ELECTRICAL PLAN — A19
GYMNASIUM BUILDING — 1/8"=1'-0"

P:\Clients\Ldsd\Norwalk-LaMirada SD\La Mirada HS Modernization 105.045\Drawings\105045e3037.dwg May 11, 2004 - 3:04pm

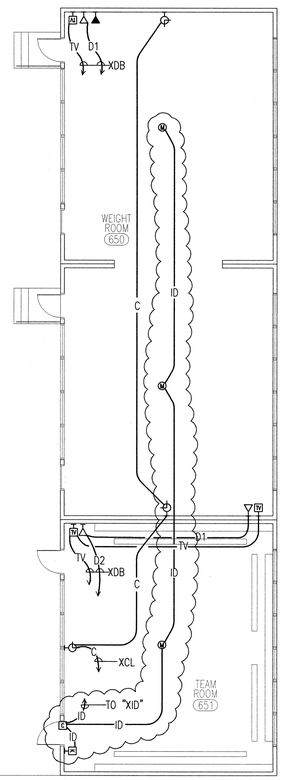

NORTH

BUILDING X SIGNAL PLAN

WEIGHT ROOM BUILDING

A19

1/8"=1'-0"

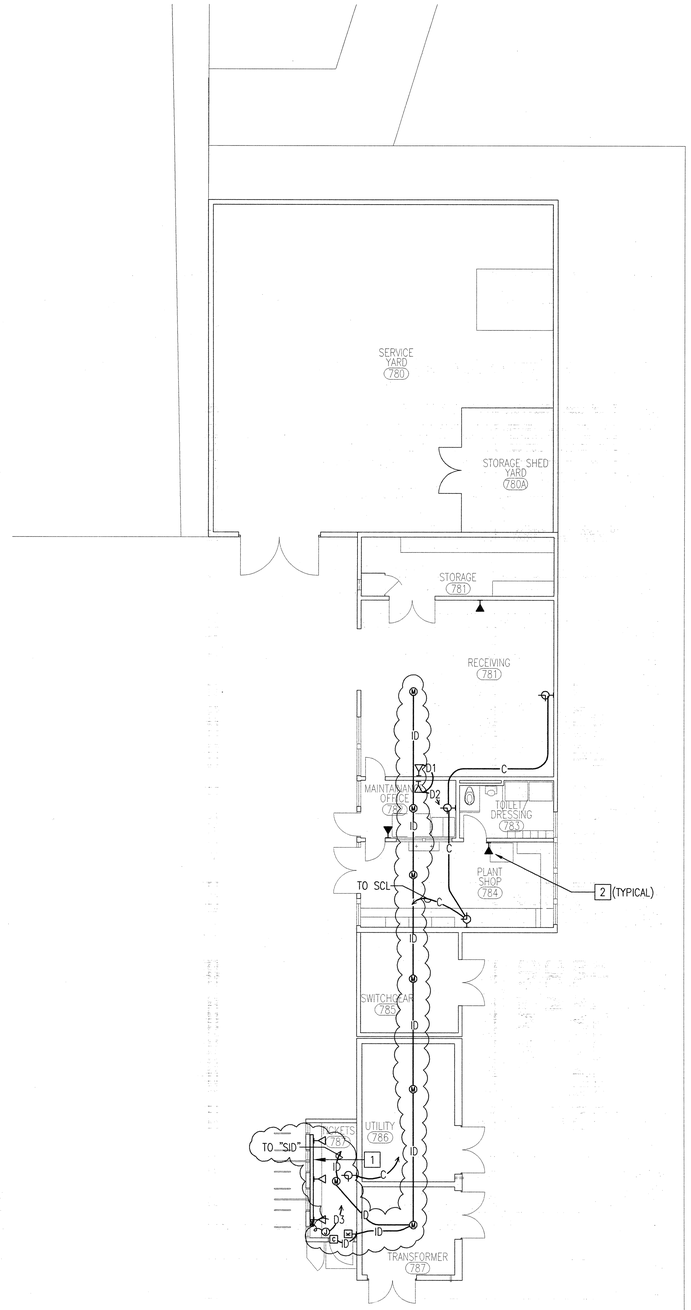

NORTH

BUILDING S SIGNAL PLAN

UTILITIES BUILDING

A19

1/8"=1'-0"

PLAN NOTES

1. PROVIDE TWO-PIECE NON-METALLIC SURFACE RACEWAY SYSTEM WITH TWO COMPARTMENTS FOR ROUTING POWER AND DATA SYSTEM CONDUCTORS (WIREMOLD #5400 SERIES OR EQUAL) COMPLETE WITH DUPLEX RECEPTACLE AND DATA OUTLETS AT LOCATIONS AS SHOWN ON PLAN. MOUNT AT 2'-0" A.F.F. TO TOP OF RACEWAY.
2. PROVIDE NEW CAT 5E OUTLET AND CABLING AT EXISTING TELEPHONE LOCATION. VERIFY EXACT LOCATION IN FIELD.

KEY PLAN

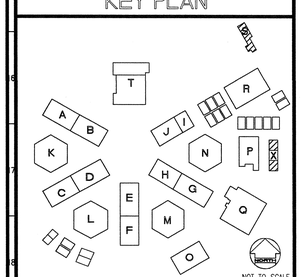

NOT TO SCALE

REVISED MAY 12 2004

IDENTIFICATION STAMP
DIV. OF THE STATE ARCHITECT
OFFICE OF REGULATION SERVICES
FILE NO. 19-H51
APPL. NO. 03-106434
AC_____ FLS NLT SS_____
DATE _____

Dougherty ■ Dougherty
Architecture • Planning • Interior Design
3194-D Airport Loop Drive
Costa Mesa, CA 92626
(714) 662-5027

Copyright © 2002 Dougherty + Dougherty

GLP Engineering, Inc.
Mechanical and Electrical Engineers
3185-C Airway Avenue
Costa Mesa, CA 92626-4601
Telephone (714) 751-1851
Fax (714) 751-4216

REGISTERED PROFESSIONAL ENGINEER — MECHANICAL — NO. C-8824 — STATE OF CALIFORNIA

Architect Seal

REGISTERED PROFESSIONAL ENGINEER — ELECTRICAL — E 17252 — EXP. 6-30-04 — STATE OF CALIFORNIA

Consultant Seal

LA MIRADA HIGH SCHOOL MODERNIZATION

NORWALK - LA MIRADA UNIFIED SCHOOL DISTRICT
13520 ADELFA DRIVE LA MIRADA, CA 90638

CLASSROOM BUILDINGS S & X SIGNAL PLANS

Date:	05-11-04
Job:	202.37.50
Scale:	AS NOTED
Drawn:	
Revisions:	
1	12-01-03

E308

P:\Clients\Dsa\Norwalk-LaMirada SD\La Mirada HS Modernization 195.0443\Drawings\1050245-X308.dwg May 11, 2004 - 3:03pm

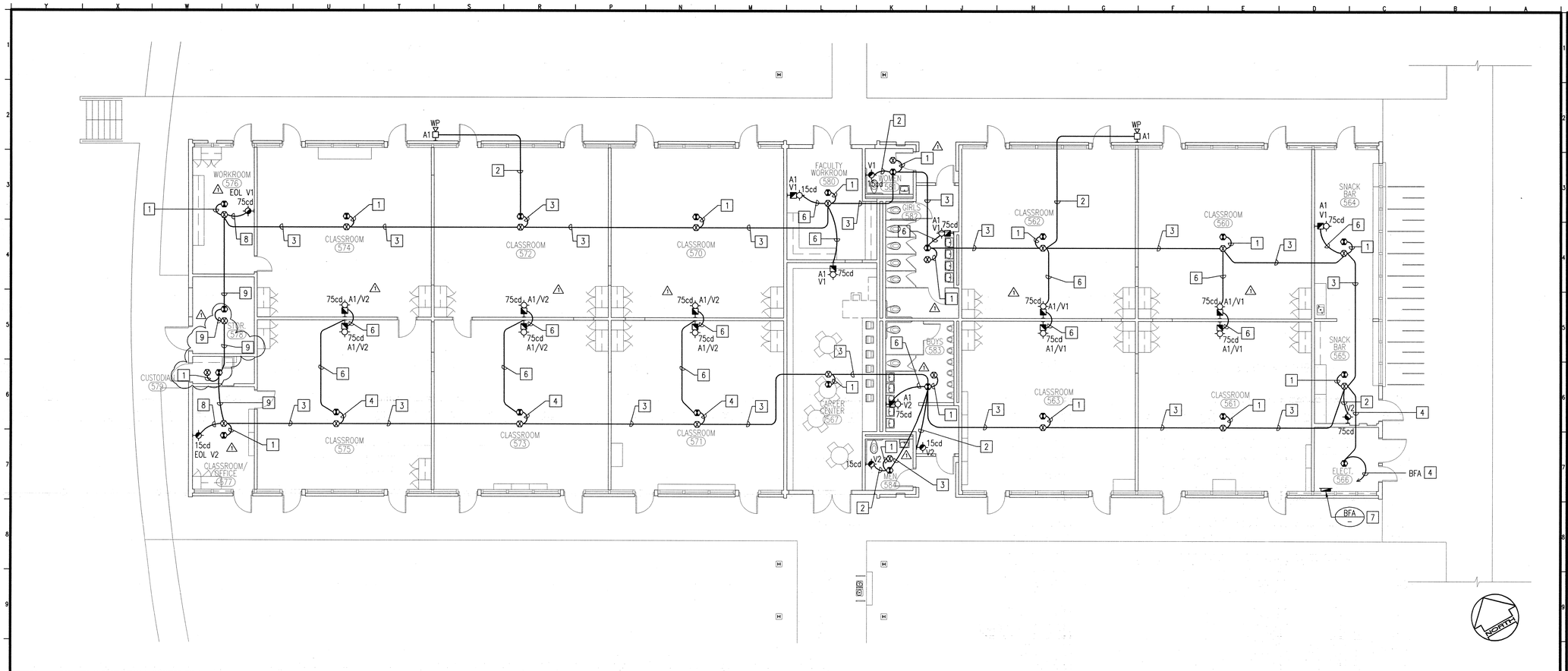

BUILDING A-B FIRE ALARM PLAN
550 BUILDING
A10
1/8"=1'-0"

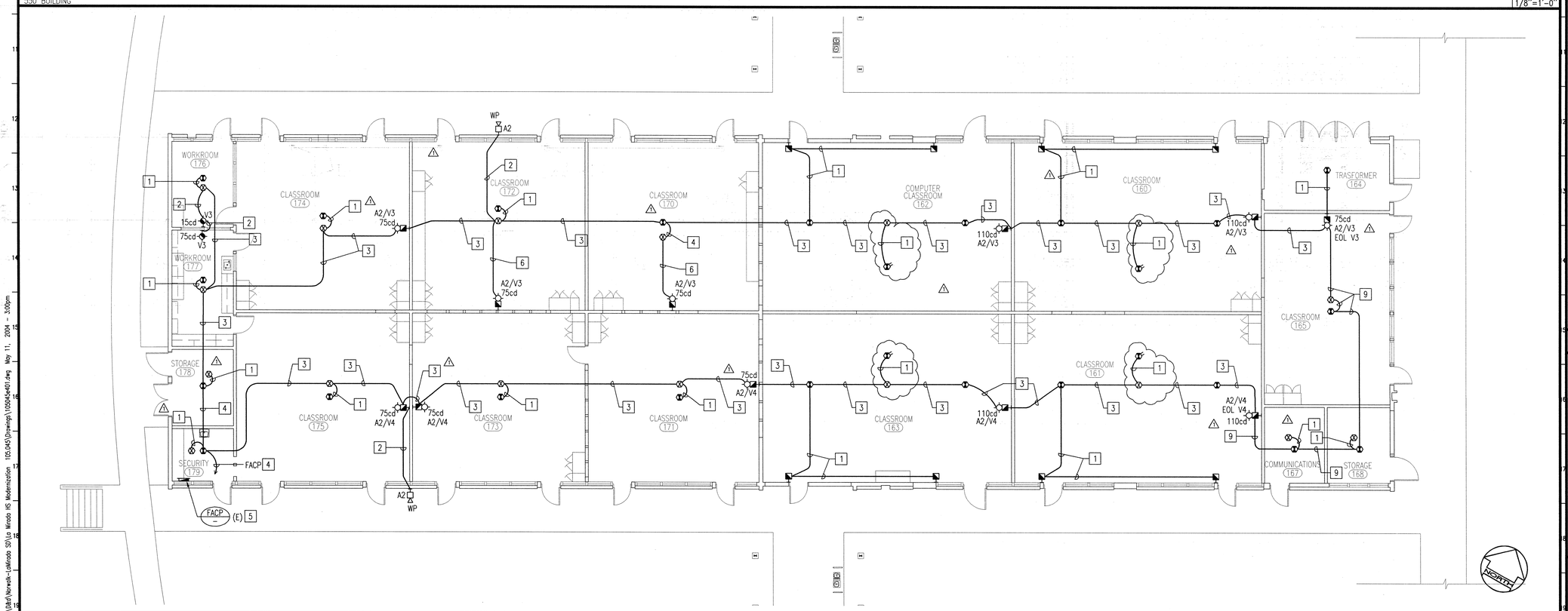

BUILDING C-D FIRE ALARM PLAN
150 BUILDING
A19
1/8"=1'-0"

PLAN NOTES

1. (2)TSP #16 (INITIATING) IN 3/4"C. FOR FIRE ALARM.
2. 4#12 (NOTIFICATION) IN 3/4"C. FOR FIRE ALARM.
3. (2)TSP #16 (INITIATING) AND 4#12 (NOTIFICATION) IN 3/4"C. FOR FIRE ALARM.
4. (2)TSP #16 (INITIATING) AND 8#12 (NOTIFICATION) IN 1"C. FOR FIRE ALARM.
5. EXISTING FIRE ALARM CONTROL PANEL TO REMAIN. MODIFY AS REQUIRED TO SERVE THE NEW CONSTRUCTION. PROVIDE ADDITIONAL EQUIPMENT AS NEEDED FOR A COMPLETE AND OPERABLE SYSTEM.
6. 8#12 (NOTIFICATION) IN 3/4"C. FOR FIRE ALARM.
7. NEW FIRE ALARM POWER SUPPLY.
8. 2#12 (NOTIFICATION) IN 3/4"C. FOR FIRE ALARM.
9. (2)TSP #16 (INITIATING) AND 2#12 (NOTIFICATION) IN 3/4"C. FOR FIRE ALARM.

KEY PLAN

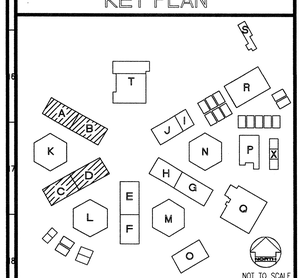

REVISED MAY 12 2004

IDENTIFICATION STAMP
DIV. OF THE STATE ARCHITECT
OFFICE OF REGULATION SERVICES
FILE NO. 19-H51
APPL. NO. 03-106434
AC. FLS. SS.
DATE

Dougherty ■■ Dougherty
Architecture • Planning • Interior Design
3194-D Airport Loop Drive
Costa Mesa, CA 92626
(714) 422-0277

Copyright © 2002 Dougherty + Dougherty

GLP Engineering, Inc.
Mechanical and Electrical Engineers
3185-C Airway Avenue
Costa Mesa, CA 92626
Telephone (714) 751-1851
Fax (714) 751-4216

REGISTERED PROFESSIONAL ENGINEER
GARY L. PAUL
No. E-8824
EXP. JULY 31, 2005
ELECTRICAL
STATE OF CALIFORNIA
Architect Seal

REGISTERED PROFESSIONAL ENGINEER
FRANK A. PRUDENTE
No. E 17252
EXP. 6-30-04
ELECTRICAL
STATE OF CALIFORNIA
Consultant Seal

LA MIRADA HIGH SCHOOL
MODERNIZATION
NORWALK - LA MIRADA UNIFIED SCHOOL DISTRICT
13520 ADELFA DRIVE LA MIRADA, CA 90638

CLASSROOM BUILDINGS A-B & C-D
FIRE ALARM PLANS

Date:	05-11-04
Job:	20237.50
Scale:	AS NOTED
Drawn:	
Revisions:	
1	12-01-03

E401

P:\Clients\Dwd\Norwalk-LaMirada SD\La Mirada HS Modernization 175.045\Drawings\1050454e401.dwg May 11, 2004 - 3:00pm

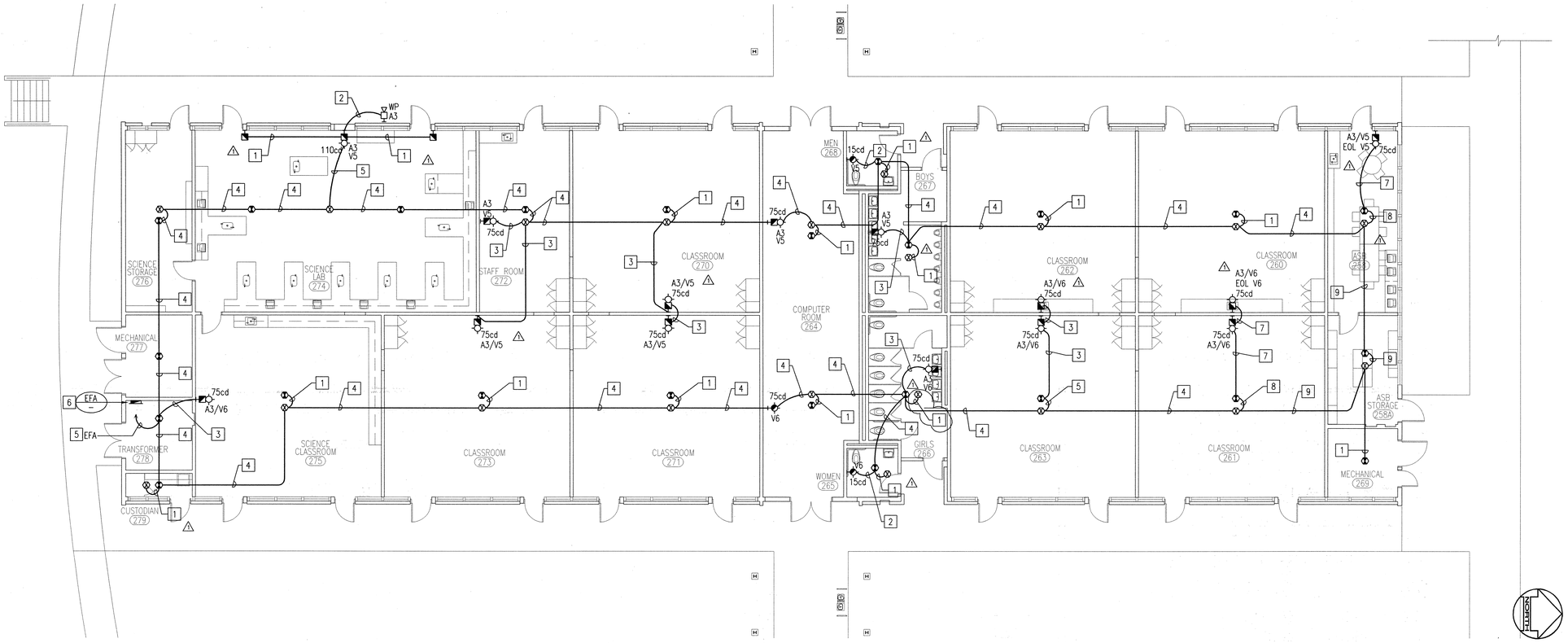

BUILDING E-F FIRE ALARM PLAN — A10

250 BUILDING — 1/8"=1'-0"

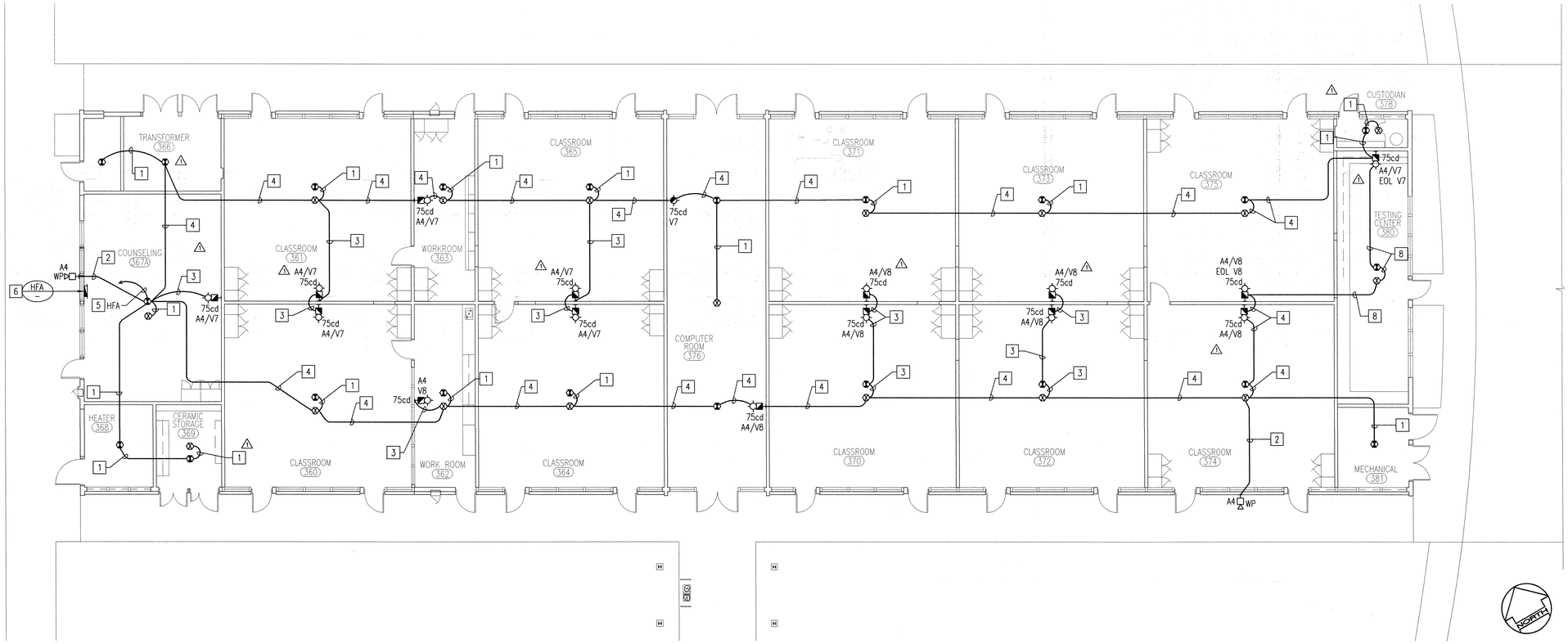

BUILDING G-H FIRE ALARM PLAN — A19

350 BUILDING — 1/8"=1'-0"

PLAN NOTES

1. (2)TSP #16 (INITIATING) IN 3/4"C. FOR FIRE ALARM.
2. 4#12 (NOTIFICATION) IN 3/4"C. FOR FIRE ALARM.
3. 8#12 (NOTIFICATION) IN 3/4"C. FOR FIRE ALARM.
4. (2)TSP #16 (INITIATING) AND 4#12 (NOTIFICATION) IN 3/4"C. FOR FIRE ALARM.
5. (2)TSP #16 (INITIATING) AND 8#12 (NOTIFICATION) IN 1"C. FOR FIRE ALARM.
6. PROVIDE NEW FIRE ALARM POWER SUPPLY.
7. 6#12 (NOTIFICATION) IN 3/4"C. FOR FIRE ALARM.
8. (2)TSP #16 (INITIATING) AND 6#12 (NOTIFICATION) IN 1"C. FOR FIRE ALARM.
9. (2)TSP #16 (INITIATING) AND 2#12 (NOTIFICATION) IN 3/4"C. FOR FIRE ALARM.

KEY PLAN

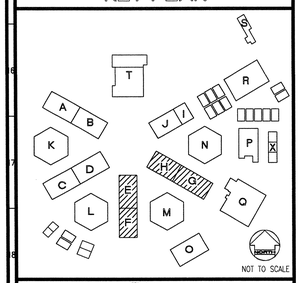

REVISED MAY 12 2004

IDENTIFICATION STAMP
DIV. OF THE STATE ARCHITECT
OFFICE OF REGULATION SERVICES
FILE NO. 19-H51
APPL. NO. 03-106434
AC N FLS N/T SS
DATE

Dougherty + Dougherty
Architecture • Planning • Interior Design
3194-D Airport Loop Drive
Costa Mesa, CA 92626
(714) 427-0277

Copyright © 2002 Dougherty + Dougherty

GLP Engineering, Inc.
Mechanical and Electrical Engineers
3185-C Airway Avenue
Costa Mesa, CA 92626-4601
Telephone (714) 751-1851
Fax (714) 751-4216

Architect Seal

Consultant Seal

LA MIRADA HIGH SCHOOL
MODERNIZATION
NORWALK - LA MIRADA UNIFIED SCHOOL DISTRICT
13520 ADELFA DRIVE LA MIRADA, CA 90638

CLASSROOM BUILDINGS E-F & G-H FIRE ALARM PLANS

Date:	05-11-04
Job:	20237.50
Scale:	AS NOTED
Drawn:	
Revisions:	
1	12-01-03

E402

P:\Clients\Dsd\Norwalk-LaMirada SD\La Mirada HS Modernization 105.0443\Drawings\100245402.dwg May 11, 2004 - 3:00pm

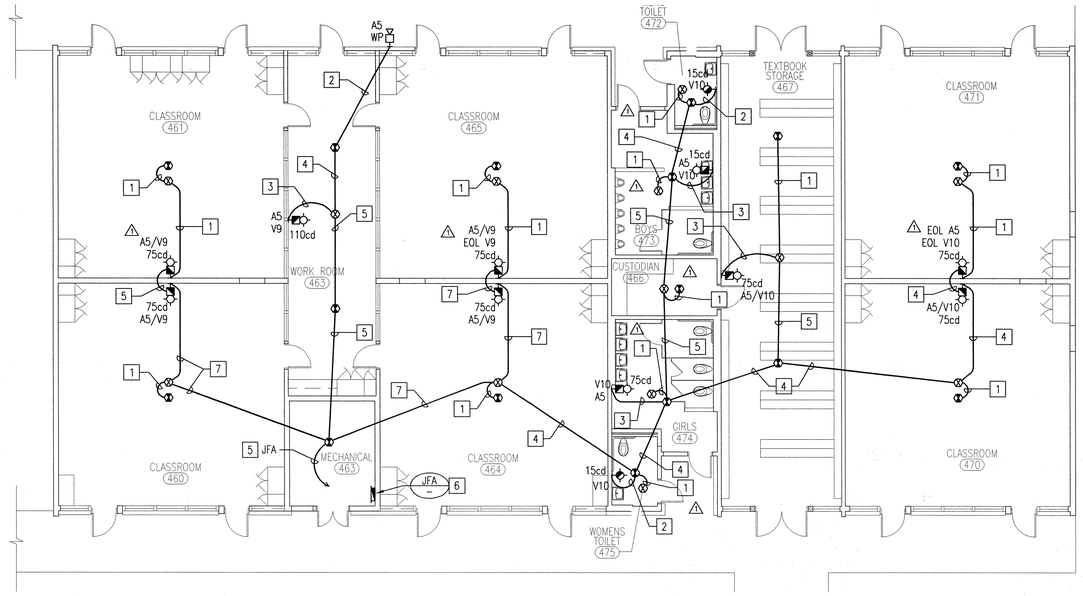

BUILDING I-J FIRE ALARM PLAN
150 BUILDING

A10
1/8"=1'-0"

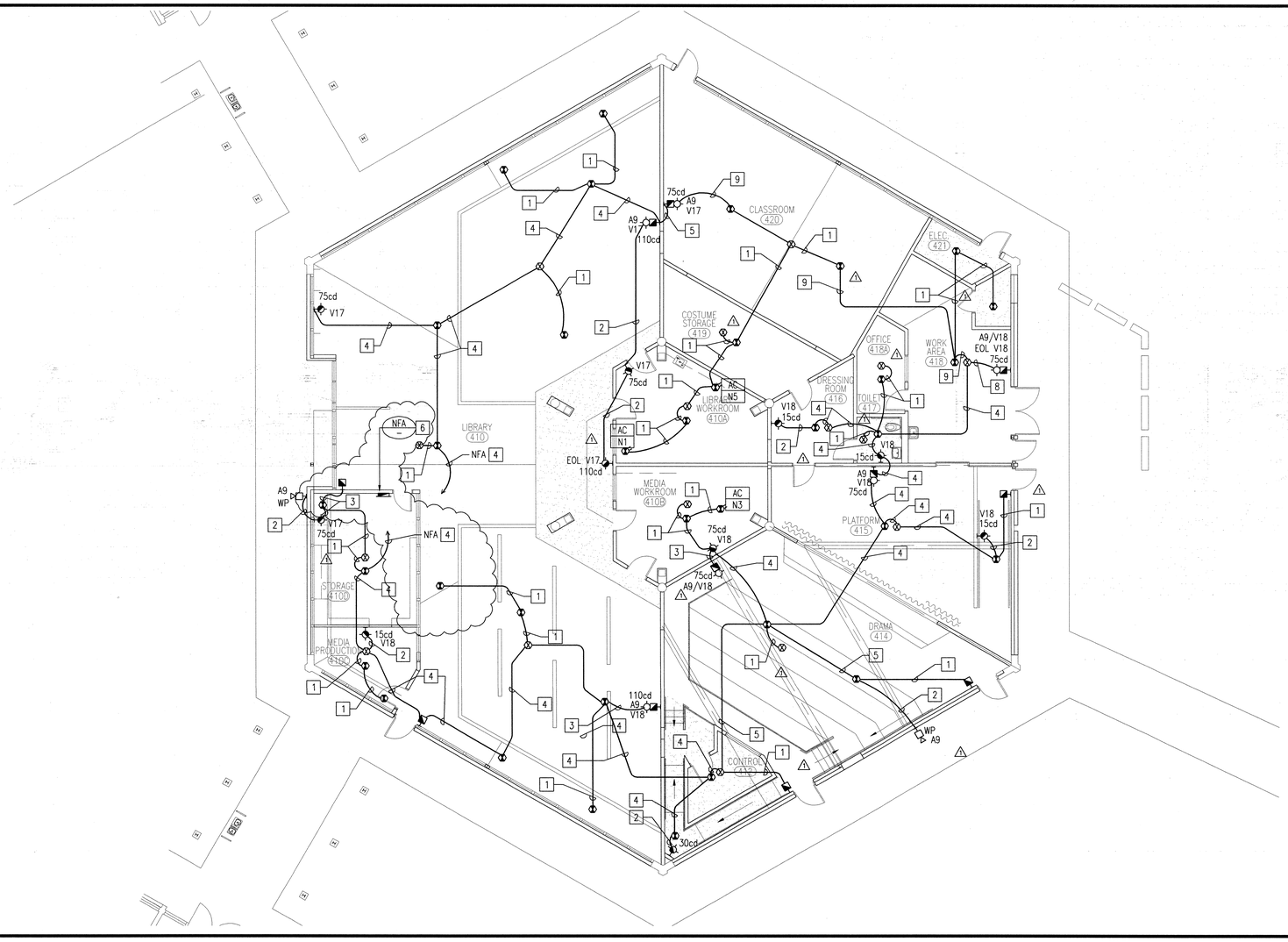

BUILDING N FIRE ALARM PLAN
LIBRARY/DRAMA BUILDING

A19
1/8"=1'-0"

PLAN NOTES

1. (2)TSP#16 (INITIATING) IN 3/4"C. FOR FIRE ALARM.
2. 4#12 (NOTIFICATION) IN 3/4"C. FOR FIRE ALARM.
3. 8#12 (NOTIFICATION) IN 3/4"C. FOR FIRE ALARM.
4. (2)TSP#16 (INITIATING) AND 4#12 (NOTIFICATION) IN 3/4"C. FOR FIRE ALARM.
5. (2)TSP#16 (INITIATING) AND 8#12 (NOTIFICATION) IN 1"C. FOR FIRE ALARM.
6. PROVIDE NEW FIRE ALARM POWER SUPPLY. △1
7. (2)TSP#16 (INITIATING) AND 6#12 (NOTIFICATION) IN 1"C. FOR FIRE ALARM.
8. 6#12 (NOTIFICATION) IN 3/4"C. FOR FIRE ALARM.
9. (2)TSP#16 (INITIATING) AND 2#12 (NOTIFICATION) IN 3/4"C. FOR FIRE ALARM.

KEY PLAN

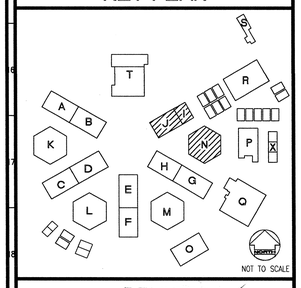

REVISED
IDENTIFICATION STAMP
DIV. OF THE STATE ARCHITECT
OFFICE OF REGULATION SERVICES
FILE NO. 19-H51
APPL. NO. 03-106434
AC FLS NT SS
DATE
MAY 12, 2004

Dougherty ■■ Dougherty
Architecture • Planning • Interior Design
3184-D Airport Loop Drive
Costa Mesa, CA 92626
(714) 427-0277

Copyright © 2002 Dougherty + Dougherty

GLP Engineering, Inc.
Mechanical and Electrical Engineers
3185-C Airway Avenue
Costa Mesa, CA 92626-4601
Telephone (714) 751-4255
Fax (714) 751-4216

REGISTERED PROFESSIONAL ENGINEER
GEORGE L. PAPPAS
NO. C-8824
EXP. 6/30/04
STATE OF CALIFORNIA
Architect Seal

REGISTERED PROFESSIONAL ENGINEER
RICHARD A. FRANK
NO. E-17202
EXP. 6-30-04
STATE OF CALIFORNIA
Consultant Seal

LA MIRADA HIGH SCHOOL
MODERNIZATION
NORWALK - LA MIRADA UNIFIED SCHOOL DISTRICT
13520 ADELFA DRIVE LA MIRADA, CA 90638

CLASSROOM
BUILDINGS I-J & N
FIRE ALARM PLANS

Date:	05-11-04
Job:	20237.50
Scale:	AS NOTED
Drawn:	
Revisions:	
△1	12-01-03

E403

P:\Clients\Dbd\Norwalk-LaMirada SD\La Mirada HS Modernization 105.043\Drawings\105043e403.dwg May 11, 2004 - 3:00pm

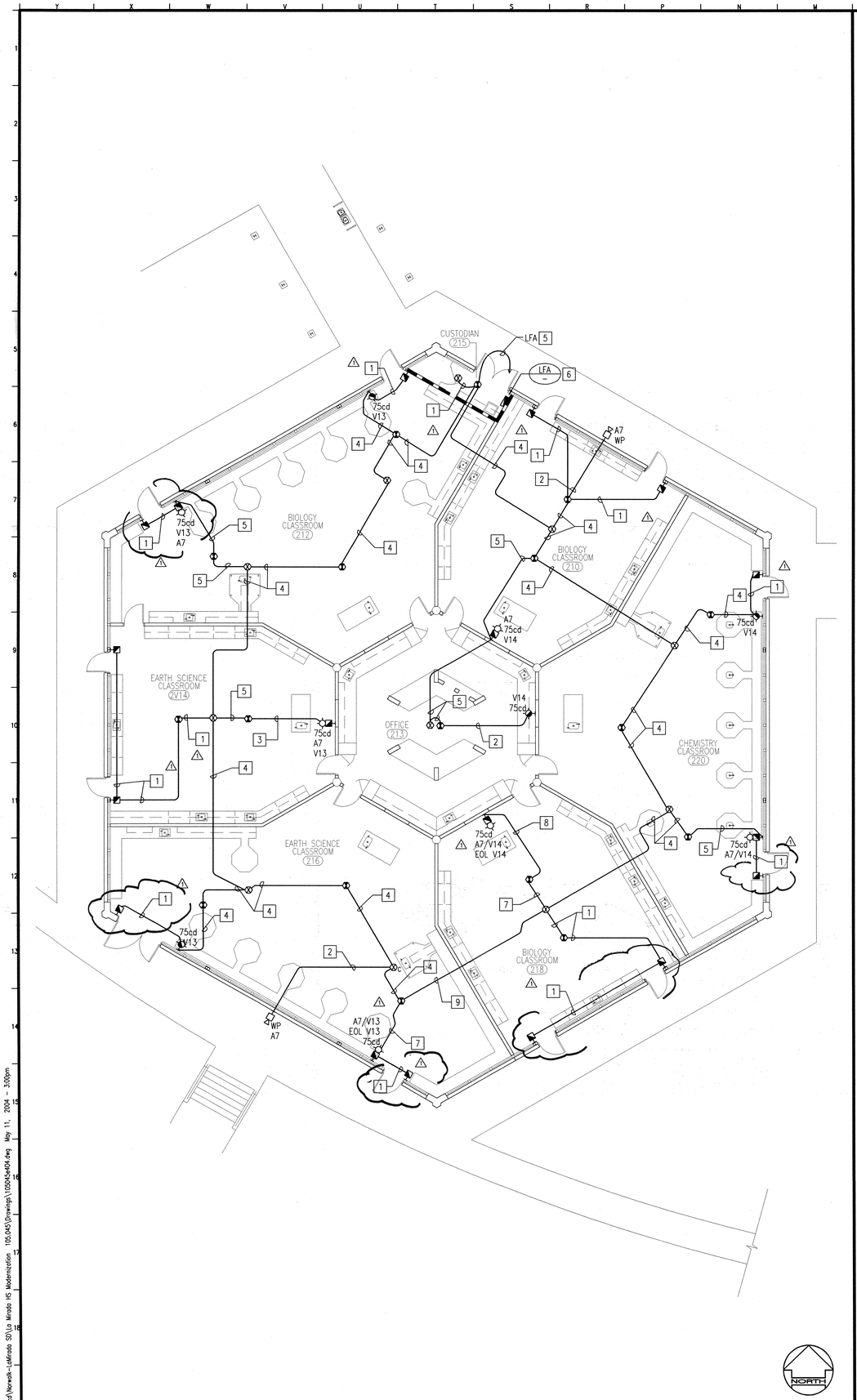

BUILDING L FIRE ALARM PLAN — M19
200 BUILDING — 1/8"=1'-0"

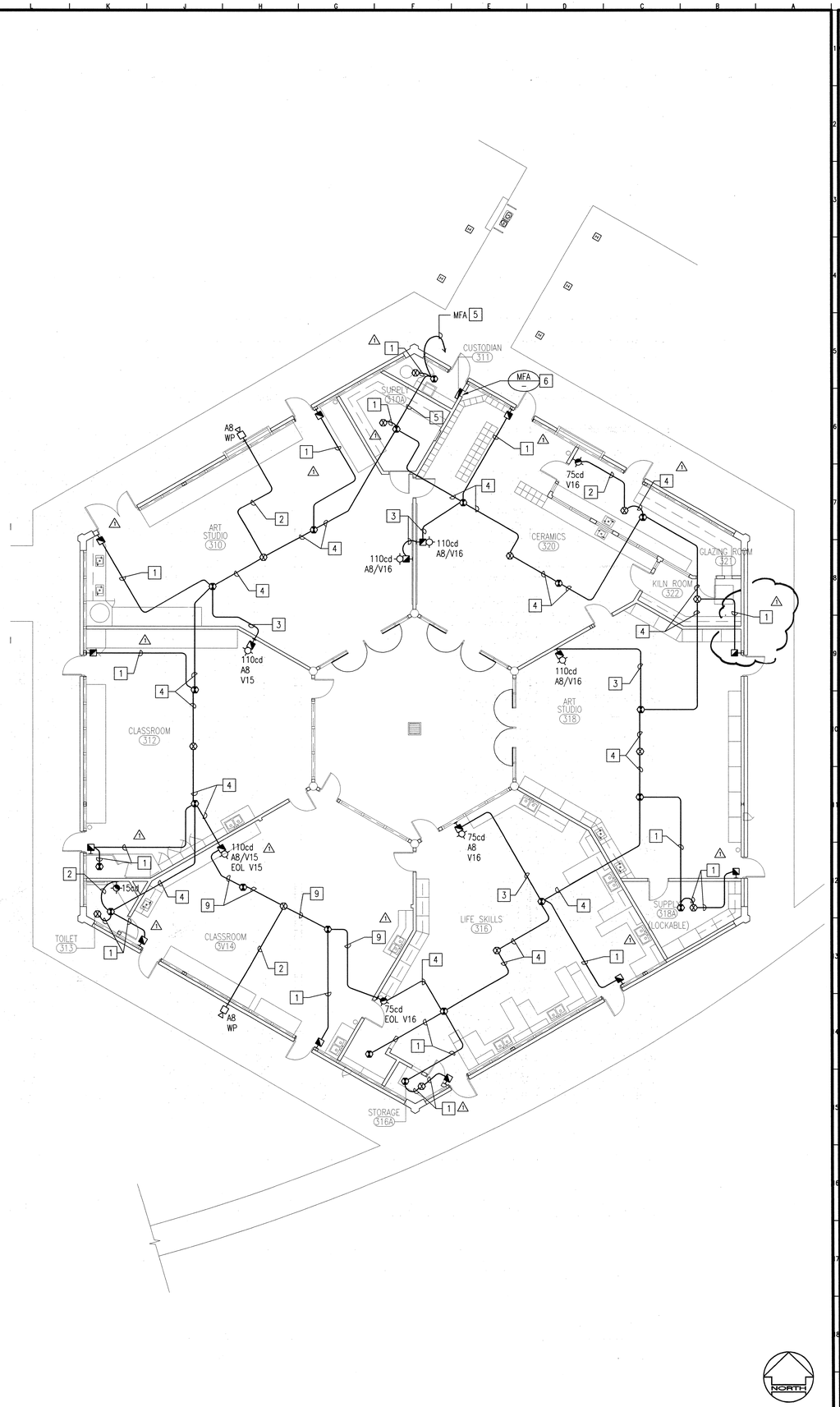

BUILDING M FIRE ALARM PLAN — A19
300 BUILDING — 1/8"=1'-0"

PLAN NOTES

1. (2) TSP #16 (INITIATING) IN 3/4"C. FOR FIRE ALARM.
2. 4#12 (NOTIFICATION) IN 3/4"C. FOR FIRE ALARM.
3. 8#12 (NOTIFICATION) IN 3/4"C. FOR FIRE ALARM.
4. (2) TSP #16 (INITIATING) AND 4#12 (NOTIFICATION) IN 3/4"C. FOR FIRE ALARM.
5. (2) TSP #16 (INITIATING) AND 8#12 (NOTIFICATION) IN 1"C. FOR FIRE ALARM.
6. PROVIDE NEW FIRE ALARM POWER SUPPLY.
7. (2) TSP #16 (INITIATING) AND 6#12 (NOTIFICATION) IN 1"C. FOR FIRE ALARM.
8. 6#12 (NOTIFICATION) IN 3/4"C. FOR FIRE ALARM.
9. (2) TSP #16 (INITIATING) AND 2#12 (NOTIFICATION) IN 3/4"C. FOR FIRE ALARM.

KEY PLAN

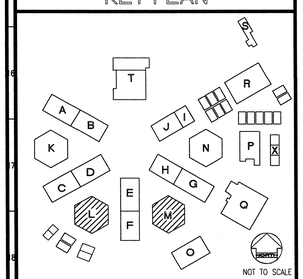

REVISED
MAY 12 2004
IDENTIFICATION STAMP
DIV. OF THE STATE ARCHITECT
OFFICE OF REGULATION SERVICES
FILE NO. 19-H51
APPL. NO. 03-106434
AC FLS RLT SS
DATE

Dougherty + Dougherty
Architecture • Planning • Interior Design
3194-D Airport Loop Drive
Costa Mesa, CA 92626
(714) 427-0277
Copyright © 2002 Dougherty + Dougherty

GLP Engineering, Inc.
Mechanical • Electrical • Equipment
3185-C Airway Avenue
Costa Mesa, CA 92626
Telephone (714) 751-1851
Fax (714) 751-4216

Architect Seal

Consultant Seal

LA MIRADA HIGH SCHOOL
MODERNIZATION
NORWALK - LA MIRADA UNIFIED SCHOOL DISTRICT
13520 ADELFA DRIVE LA MIRADA, CA 90638

CLASSROOM BUILDINGS L & M
FIRE ALARM PLANS

Date:	05-11-04
Job:	20237.50
Scale:	AS NOTED
Drawn:	
Revisions:	
1	12-01-03

E404

P:\Clients\Dsd\Norwalk-Lamirada SD\La Mirada HS Modernization 106.043\Drawings\106043e404.dwg May 11, 2004 - 3:00pm

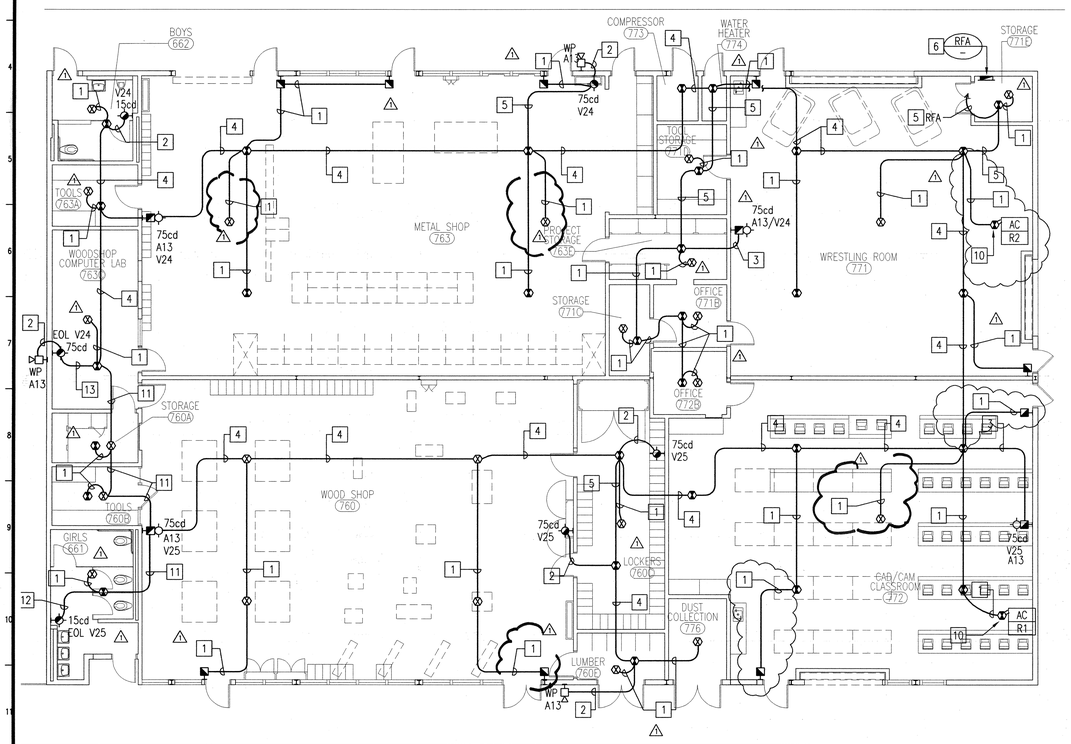

BUILDING R FIRE ALARM PLAN

SHOP BUILDING — L19 — 1/8"=1'-0"

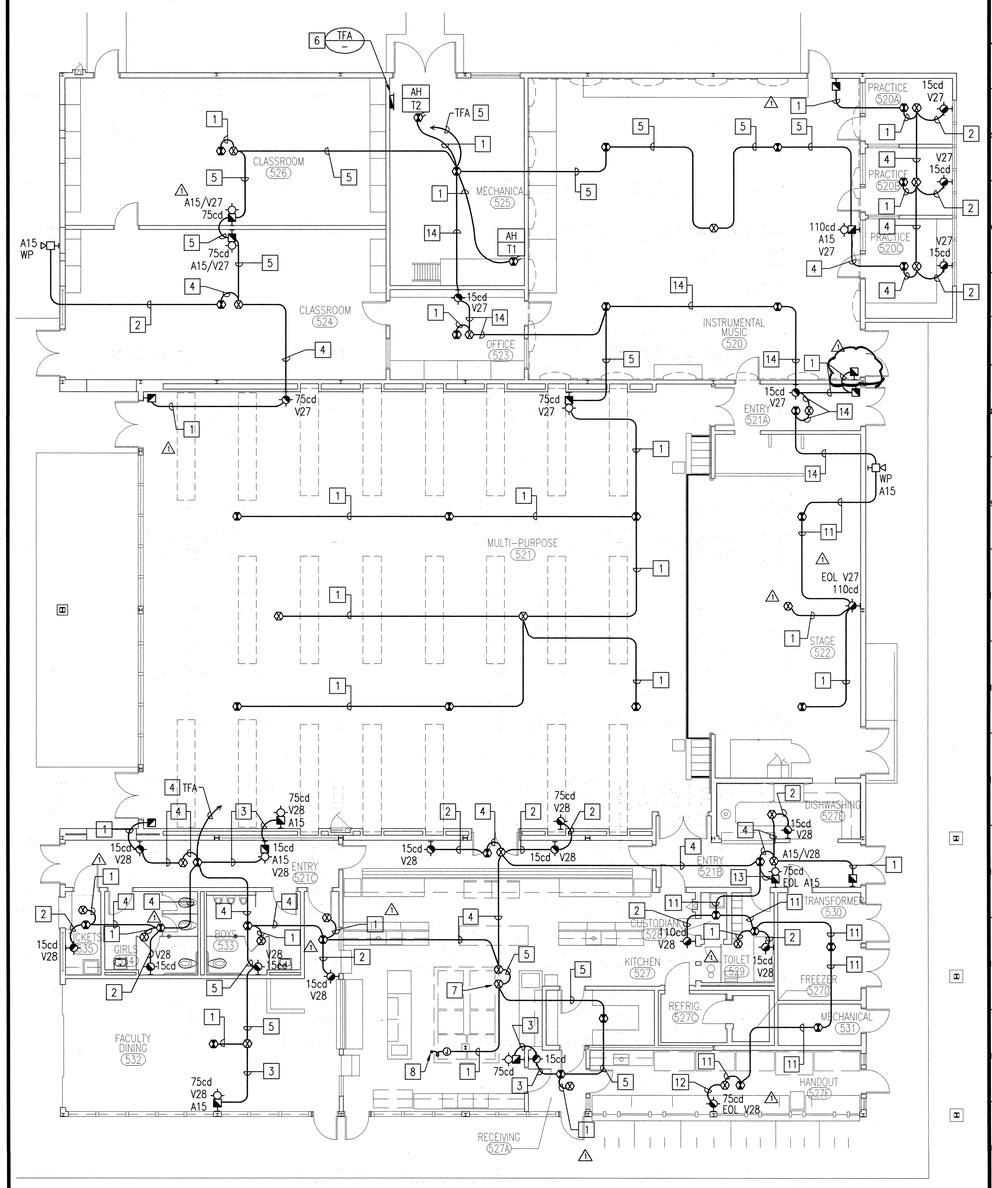

BUILDING T FIRE ALARM PLAN

MULTI-PURPOSE BUILDING — A19 — 1/8"=1'-0"

PLAN NOTES

1. (2) TSP #16 (INITIATING) IN 3/4"C. FOR FIRE ALARM.
2. 4#12 (NOTIFICATION) IN 3/4"C. FOR FIRE ALARM.
3. 8#12 (NOTIFICATION) IN 3/4"C. FOR FIRE ALARM.
4. (2) TSP #16 (INITIATING) AND 4#12 (NOTIFICATION) IN 3/4"C. FOR FIRE ALARM.
5. (2) TSP #16 (INITIATING) AND 8#12 (NOTIFICATION) IN 1"C. FOR FIRE ALARM.
6. NEW FIRE ALARM POWER SUPPLY.
7. MOUNT HEAT DETECTOR BELOW CEILING.
8. CONNECT TO HOOD ANSUL SYSTEM AS REQUIRED. VERIFY EXACT LOCATION IN FIELD.
9. DOWN TO DEVICE BELOW.
10. VERIFY EXACT LOCATION WITH MECHANICAL PRIOR TO ROUGH-IN.
11. (2) TSP #16 (INITIATING) AND 2#12 (NOTIFICATION) IN 3/4"C. FOR FIRE ALARM.
12. 2#12 (NOTIFICATION) IN 3/4"C. FOR FIRE ALARM.
13. 6#12 (NOTIFICATION) IN 3/4"C. FOR FIRE ALARM.
14. (2) TSP #16 (INITIATING) AND 6#12 (NOTIFICATION) IN 1"C. FOR FIRE ALARM.

KEY PLAN

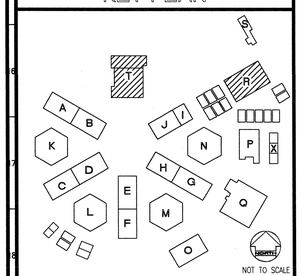

REVISED MAY 12 2004

IDENTIFICATION STAMP
DIV. OF THE STATE ARCHITECT
OFFICE OF REGULATION SERVICES
FILE NO. 19-H51
APPL. NO. 03-106434
AC ___ FLS NC SS ___
DATE ___

Dougherty + Dougherty
Architecture · Planning · Interior Design
3194-D Airport Loop Drive
Costa Mesa, CA 92626
(714) 427-0277

Copyright © 2002 Dougherty + Dougherty

GLP Engineering Inc.
Mechanical and Electrical Engineers
3185-C Airway Avenue
Costa Mesa, CA 92626-4601
Telephone (714) 751-1851
Fax (714) 751-4216

Architect Seal

Consultant Seal

LA MIRADA HIGH SCHOOL MODERNIZATION
NORWALK - LA MIRADA UNIFIED SCHOOL DISTRICT
13520 ADELFA DRIVE LA MIRADA, CA 90638

BUILDINGS R & T
FIRE ALARM PLANS

Date:	05-11-04
Job:	20237.50
Scale:	AS NOTED
Drawn:	
Revisions:	
1	12-01-03

E405

P:\Clients\DAG\Norwalk-LaMirada SD\La Mirada HS Modernization 105.045\Drawings\105045405.dwg May 11, 2004 - 2:38pm

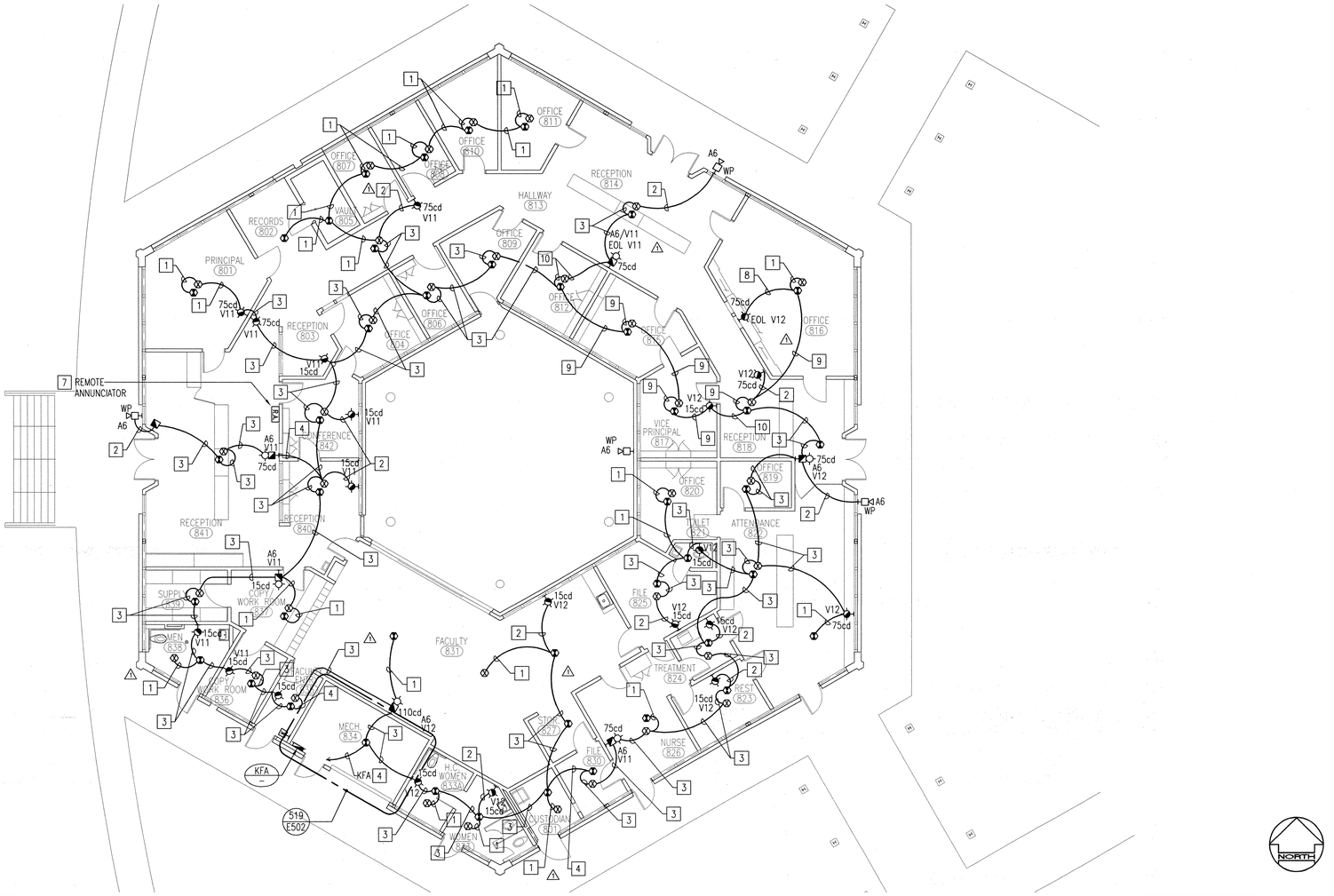

BUILDING K FIRE ALARM PLAN

ADMINISTRATION BUILDING

A19

1/8"=1'-0"

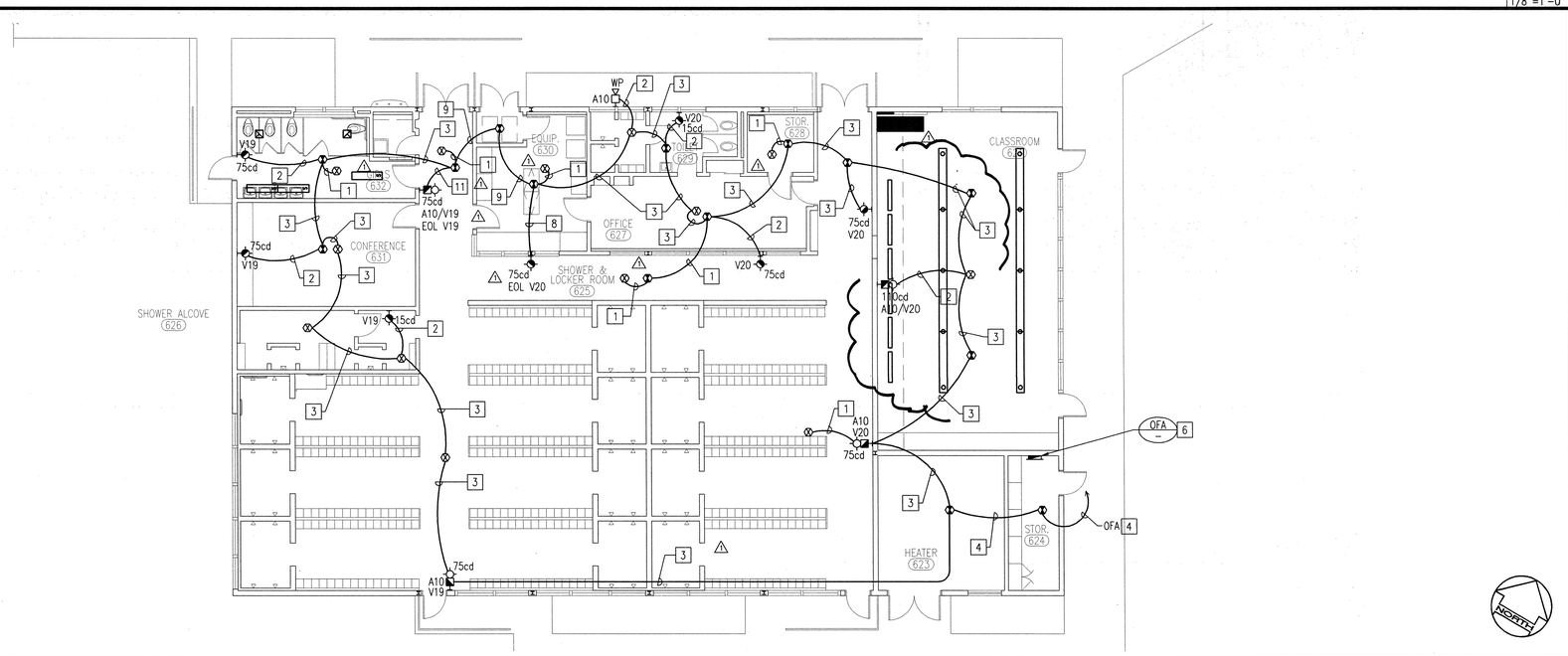

BUILDING O FIRE ALARM PLAN

GIRLS LOCKER BUILDING

A19

1/8"=1'-0"

PLAN NOTES

1. (2)TSP #16 (INTIATING) IN 3/4"C. FOR FIRE ALARM.
2. 4#12 (NOTIFICATION) IN 3/4"C. FOR FIRE ALARM.
3. (2)TSP #16 (INITIATING) AND 4#12 (NOTIFICATION) IN 3/4"C. FOR FIRE ALARM.
4. (2)TSP #16 (INITIATING) AND 8#12 (NOTIFICATION) IN 1"C. FOR FIRE ALARM.
5. 8#12 (NOTIFICATION) IN 3/4"C. FOR FIRE ALARM.
6. NEW FIRE ALARM POWER SUPPLY.
7. EXISTING FIRE ALARM REMOTE ANNUNCIATOR TO REMAIN. PROVIDE NEW CABLING IN NEW CONDUITS AND RECONNECT AS REQUIRED FOR A COMPLETE AND OPERABLE SYSTEM. △1
8. 2#12 (NOTIFICATION) IN 3/4"C. FOR FIRE ALARM.
9. (2)TSP #16 (INITIATING) AND 2#12 (NOTIFICATION) IN 3/4"C. FOR FIRE ALARM.
10. (2)TSP #16 (INITIATING) AND 6#12 (NOTIFICATION) IN 1"C. FOR FIRE ALARM.
11. 6#12 (NOTIFICATION) IN 3/4"C. FOR FIRE ALARM.

KEY PLAN

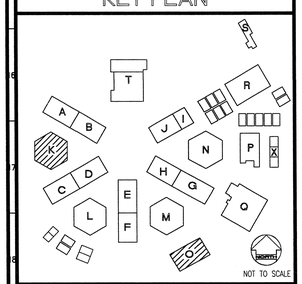

REVISED MAY 12 2004

IDENTIFICATION STAMP
DIV. OF THE STATE ARCHITECT
OFFICE OF REGULATION SERVICES

FILE NO. 19-H51
APPL. NO. 03-106434

AC. FLS. SS.

DATE

Dougherty Dougherty
Architecture • Planning • Interior Design
3194-D Airport Loop Drive
Costa Mesa, CA 92626
(714) 427-0277

Copyright © 2002 Dougherty + Dougherty

GLP Engineering, Inc.
Mechanical and Electrical Engineers
3185-C Airway Avenue
Costa Mesa, CA 92626-4601
Telephone (714) 751-1851
Fax (714) 751-4216

LICENSED ARCHITECT REGISTERED PROFESSIONAL ENGINEER
No. C-9824
STATE OF CALIFORNIA
Architect Seal

REGISTERED PROFESSIONAL ENGINEER
No. E 17252
EXP. 6-30-04
ELECTRICAL
STATE OF CALIFORNIA
Consultant Seal

LA MIRADA HIGH SCHOOL
MODERNIZATION
NORWALK - LA MIRADA UNIFIED SCHOOL DISTRICT
13520 ADELFA DRIVE LA MIRADA, CA 90638

BUILDINGS
K & O
FIRE ALARM PLANS

Date:	05-11-04
Job:	20237.50
Scale:	AS NOTED
Drawn:	
Revisions:	
△1	12-01-03

E406

P:\Clients\Dougherty\Norwalk-LaMirada SD\La Mirada HS Modernization 105045\Drawings\105045e406.dwg May 11, 2004 - 2:58pm

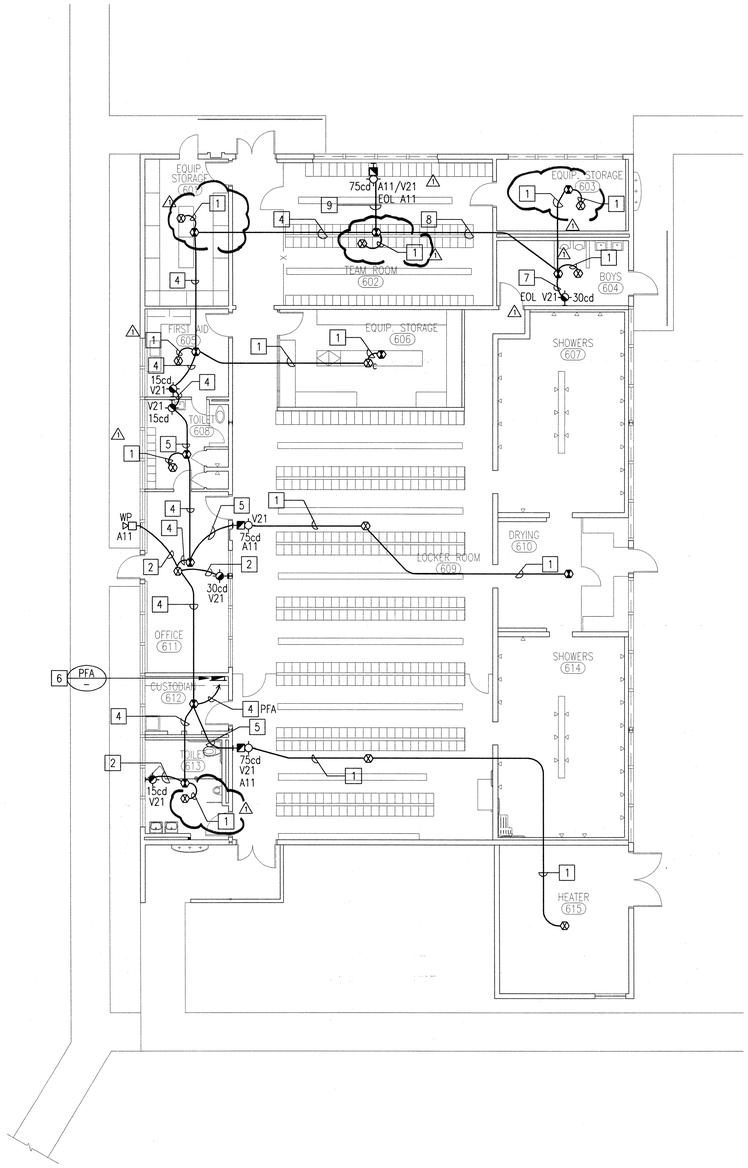

BUILDING P FIRE ALARM PLAN — P19
BOYS LOCKER ROOM BUILDING — 1/8"=1'-0"

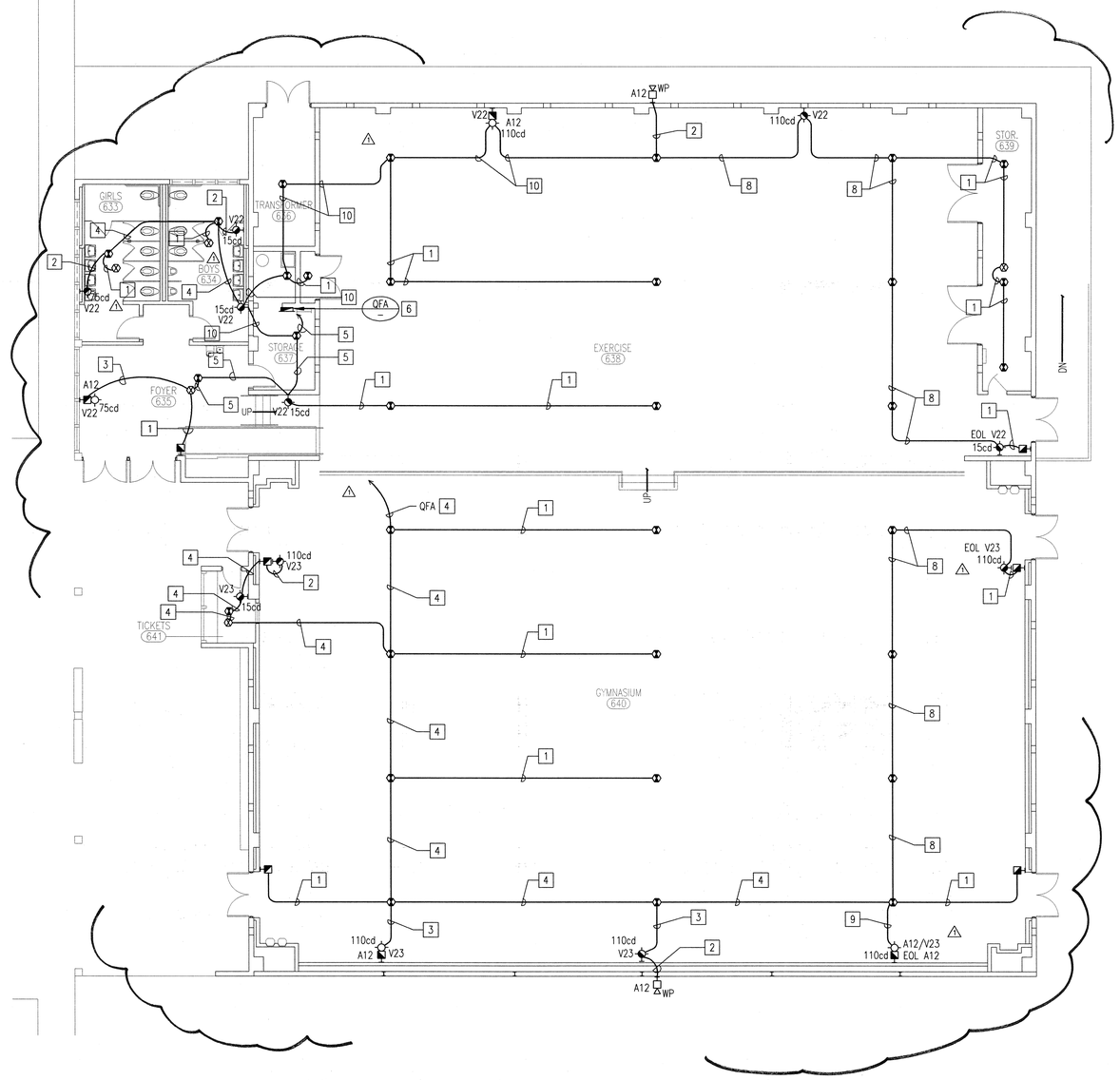

BUILDING Q FIRE ALARM PLAN — A19
GYMNASIUM BUILDING — 1/8"=1'-0"

PLAN NOTES

1. 2#16 TSP (INITIATING IN 3/4"C. FOR FIRE ALARM.
2. 4#12 (NOTIFICATION) IN 3/4"C. FOR FIRE ALARM.
3. 8#12 (NOTIFICATION) IN 3/4"C. FOR FIRE ALARM.
4. 2#16 TSP (INITIATING) AND 4#12 (NOTIFICATION) IN 3/4"C. FOR FIRE ALARM.
5. 2#16 TSP (INITIATING) AND 8#12 (NOTIFICATION) IN 1"C. FOR FIRE ALARM.
6. NEW FIRE ALARM POWER SUPPLY. △1
7. 2#12 (NOTIFICATION) IN 3/4"C. FOR FIRE ALARM.
8. 2#16 TSP (INITIATING) AND 2#12 (NOTIFICATION) IN 3/4"C. FOR FIRE ALARM.
9. 6#12 (NOTIFICATION) IN 3/4"C. FOR FIRE ALARM.
10. 2#16 TSP (INITIATING) AND 6#12 (NOTIFICATION) IN 1"C. FOR FIRE ALARM.

KEY PLAN

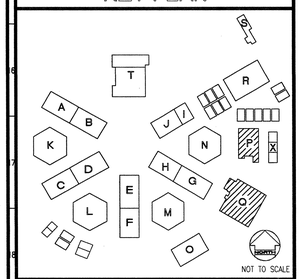

REVISED MAY 12 2004

IDENTIFICATION STAMP
DIV. OF THE STATE ARCHITECT
OFFICE OF REGULATION SERVICES
FILE NO. 19-H51
APPL. NO. 03-106434
AC. FLS. SS.
DATE

Dougherty + Dougherty
Architecture • Planning • Interior Design
3194-D Airport Loop Drive
Costa Mesa, CA 92626
(949) 474-0202
(714) 427-0217

Copyright © 2002 Dougherty + Dougherty

GLP Engineering, Inc.
Mechanical and Electrical Engineers
3185-C Airway Avenue
Costa Mesa, CA 92626-4601
Telephone (714) 751-1851
Fax (714) 751-4216

LICENSED ARCHITECT — REGISTERED PROFESSIONAL ENGINEER — STATE OF CALIFORNIA — NO. C-8824 — EXP. JULY 31, 2005

Architect Seal

REGISTERED PROFESSIONAL ENGINEER — No. E 17252 — EXP. 6-30-04 — ELECTRICAL — STATE OF CALIFORNIA

Consultant Seal

LA MIRADA HIGH SCHOOL MODERNIZATION
NORWALK - LA MIRADA UNIFIED SCHOOL DISTRICT
13520 ADELFA DRIVE LA MIRADA, CA 90638

BUILDINGS P & Q
FIRE ALARM PLANS

Date:	05-11-04
Job:	20237.50
Scale:	AS NOTED
Drawn:	
Revisions:	
△1	12-01-03

E407

P:\Clients\D&F\Norwalk-LaMirada SD\La Mirada HS Modernization 105.045\Drawings\105045e407.dwg May 11, 2004 - 2:57pm

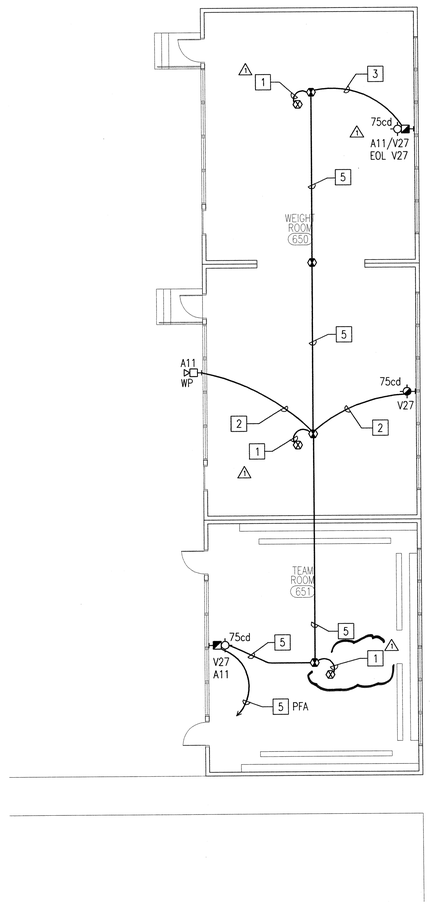

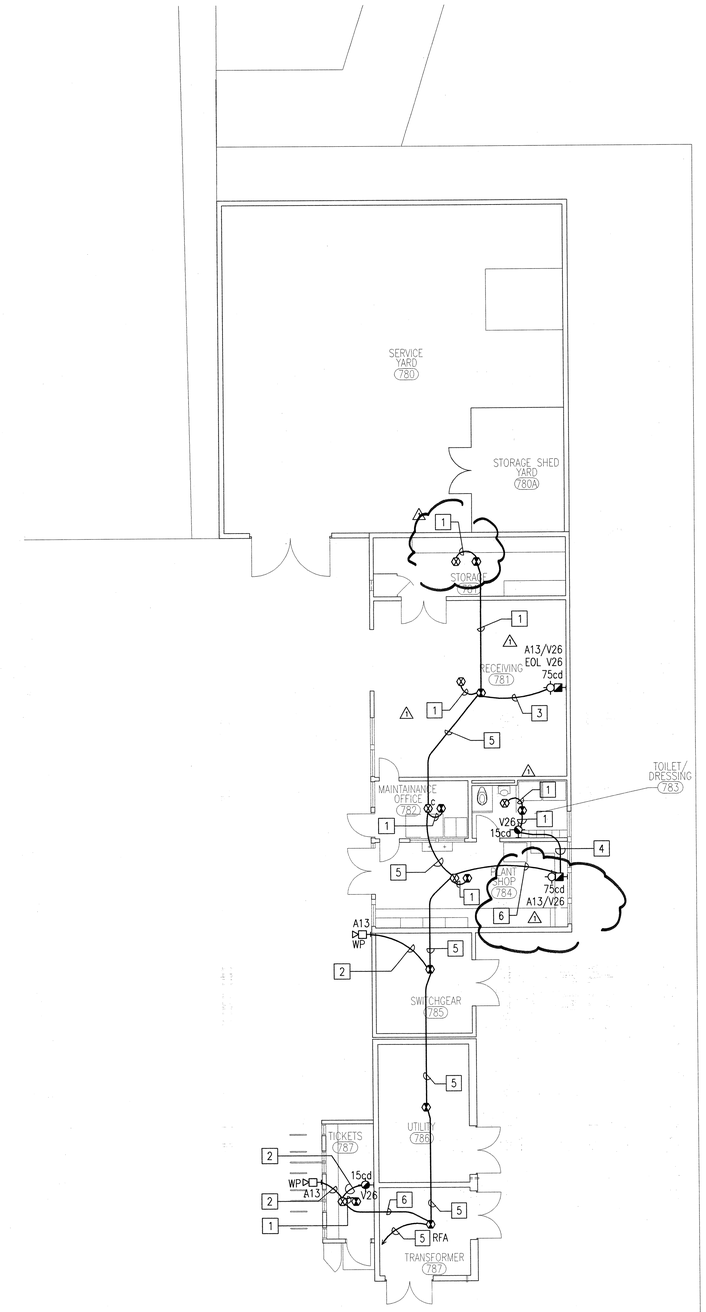

PLAN NOTES

1. 2#16 TSP (INITIATING IN 3/4"C. FOR FIRE ALARM.
2. 4#12 (NOTIFICATION) IN 3/4"C. FOR FIRE ALARM. △1
3. 6#12 (NOTIFICATION) IN 3/4"C. FOR FIRE ALARM.
4. 2#16 TSP (INITIATING) AND 4#12 (NOTIFICATION) IN 3/4"C. FOR FIRE ALARM. △1
5. 2#16 TSP (INITIATING) AND 6#12 (NOTIFICATION) IN 1"C. FOR FIRE ALARM.
6. 2#16 TSP (INITIATING) AND 8#12 (NOTIFICATION) IN 1"C. FOR FIRE ALARM.

KEY PLAN

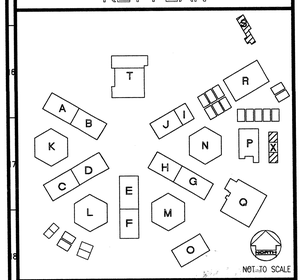

REVISED
NOV 12 2004

IDENTIFICATION STAMP
DIV. OF THE STATE ARCHITECT
OFFICE OF REGULATION SERVICES
FILE NO. 19-H51
APPL. NO. 03-106434
AC FLS MCF SS
DATE

Dougherty ■ Dougherty
Architecture • Planning • Interior Design
3186 Airway Avenue, Suite B
Costa Mesa, CA 92626
(714) 427-0277

Copyright © 2002 Dougherty + Dougherty

GLP Engineering, Inc.
Mechanical and Electrical Engineers
3185-C Airway Avenue
Costa Mesa, CA 92626-4601
Telephone (714) 751-1851
Fax (714) 751-4216

REGISTERED PROFESSIONAL ENGINEER
NO. C-9824
STATE OF CALIFORNIA
Architect Seal

REGISTERED PROFESSIONAL ENGINEER
NO. E 17252
EXP. 6-30-04
ELECTRICAL
STATE OF CALIFORNIA
Consultant Seal

LA MIRADA HIGH SCHOOL MODERNIZATION

NORWALK - LA MIRADA UNIFIED SCHOOL DISTRICT
13520 ADELFA DRIVE LA MIRADA, CA 90638

CLASSROOM BUILDINGS S & X FIRE ALARM PLANS

Date:	05-11-04
Job:	20237.50
Scale:	AS NOTED
Drawn:	
Revisions:	
△1	12-01-03

E408

BUILDING X FIRE ALARM PLAN

WEIGHT ROOM BUILDING

A19
1/8"=1'-0"

BUILDING S FIRE ALARM PLAN

UTILITIES BUILDING

A19
1/8"=1'-0"

P:\Clients\Dsd\Norwalk-LaMirada SD\La Mirada HS Modernization 105.043\Drawings\105043e408.dwg May 11, 2004 - 2:57pm

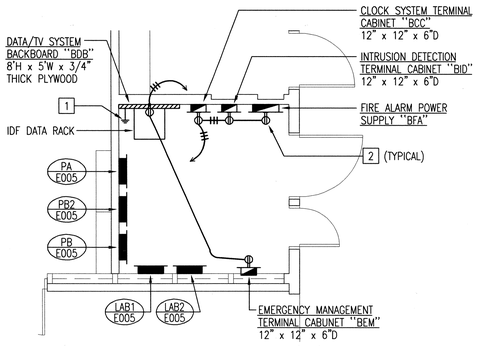

BUILDING AB - ELECTRICAL ROOM 566 DETAIL | R6 | 1/4"=1'-0"

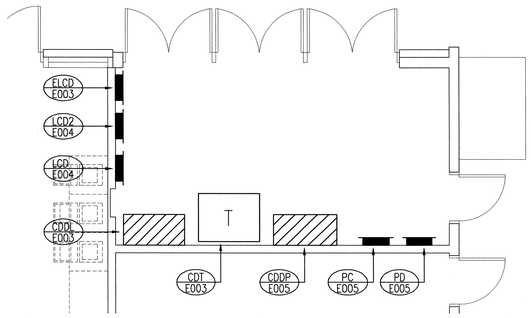

BUILDING CD - ELECTRICAL ROOM 164 DETAIL | H6 | 1/4"=1'-0"

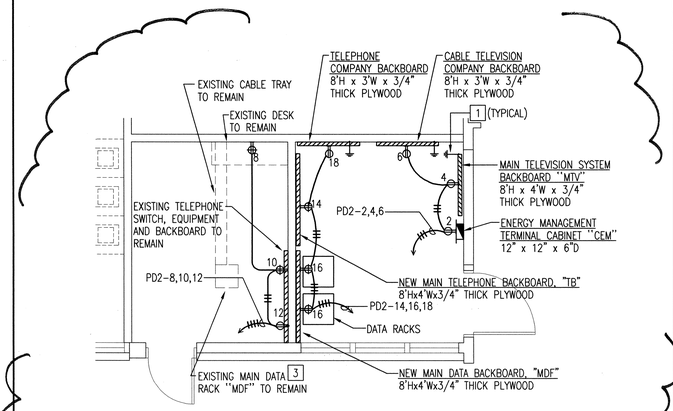

BUILDING CD - ELECTRICAL ROOM 167 DETAIL | A6 | 1/4"=1'-0"

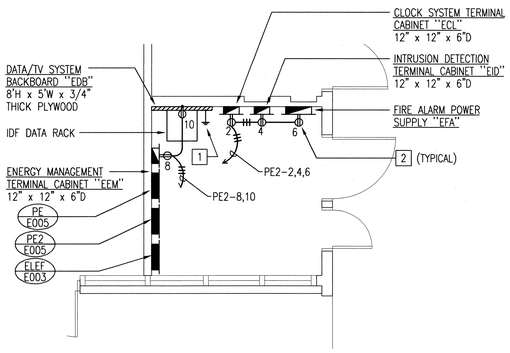

BUILDING EF - ELECTRICAL ROOM 269 DETAIL | R12 | 1/4"=1'-0"

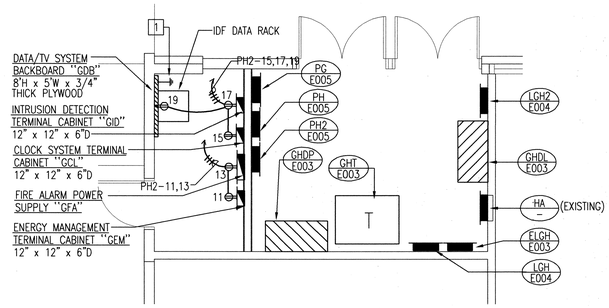

BUILDING GH - ELECTRICAL ROOM DETAIL 366, 367A DETAIL | H12 | 1/4"=1'-0"

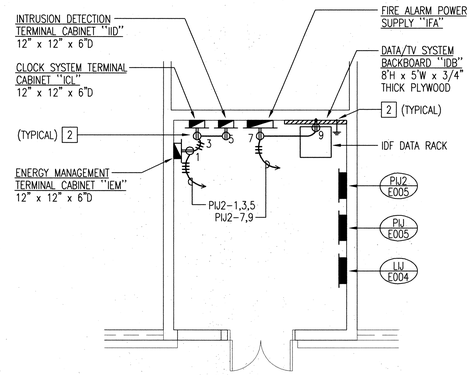

BUILDIN IJ - ELECTRICAL ROOM 462 DETAIL | A12 | 1/4"=1'-0"

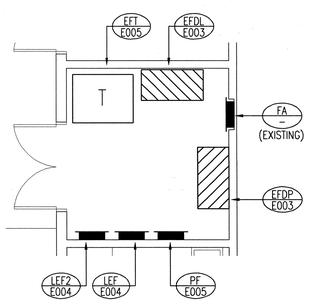

BUILDING EF - TRANSFORMER ROOM 278 DETAIL | R19 | 1/4"=1'-0"

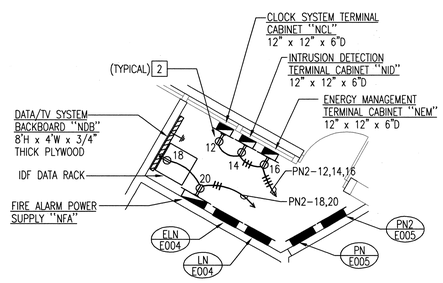

BUILDING N - ELECTRICAL ROOM 421 DETAIL | H19 | 1/4"=1'-0"

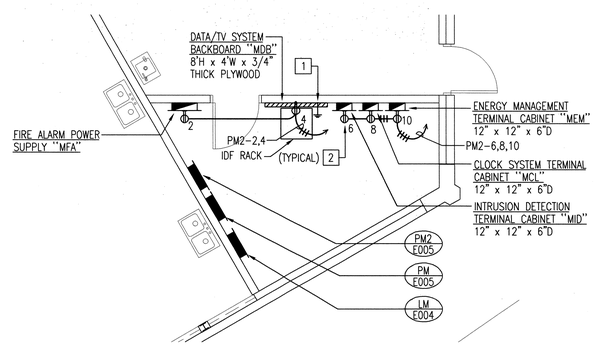

BUILDING M - ELECTRICAL ROOM 318A DETAIL | A19 | 1/4"=1'-0"

PLAN NOTES

1. PROVIDE 1#6 (GND) IN 3/4" CONDUIT TO BUILDING COLD WATER PIPE.
2. MOUNT RECEPTACLE IN TERMINAL CABINET.
3. MODIFY THE EXISTING MAIN DATA "MDF" RACK AS REQUIRED TO SERVE THE NEW CONSTRUCTION. PROVIDE ADDITIONAL EQUIPMENT AS NEEDED FOR A COMPLETE AND OPERABLE SYSTEM.

KEY PLAN

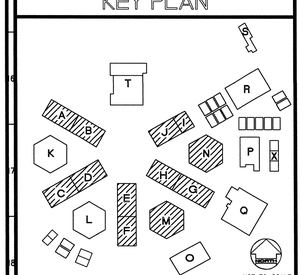

REVISED

IDENTIFICATION STAMP
DIV. OF THE STATE ARCHITECT
OFFICE OF REGULATION SERVICES
FILE NO. 19-H51
APPL. NO. 03-106434
AC ___ FLS. NT SS ___
DATE ___

MAY 12 2004

Dougherty + Dougherty
Architecture • Planning • Interior Design
3194-D Airport Loop Drive
Costa Mesa, CA 92626
(714) 427-0277

Copyright © 2002 Dougherty + Dougherty

GLP Engineering, Inc.
Mechanical and Electrical Engineers
3185-C Airway Avenue
Costa Mesa, CA 92626-4601
Telephone (714) 751-1851
Fax (714) 751-4216

Architect Seal

Consultant Seal

LA MIRADA HIGH SCHOOL
MODERNIZATION
NORWALK - LA MIRADA UNIFIED SCHOOL DISTRICT
13520 ADELFA DRIVE LA MIRADA, CA 90638

ELECTRICAL DETAILS

Date:	05-11-04
Job:	20237.50
Scale:	1/8"=1'-0"
Drawn:	GLPK
Revisions:	

E501

P:\Clients\DAA\Norwalk-LaMirada SD\La Mirada HS Modernization 105.045\Drawings\105045e501.dwg May 11, 2004 - 2:54pm

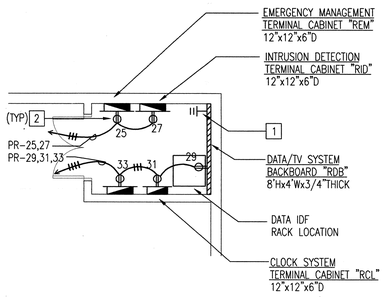

BUILDING R - ELECTRICAL ROOM 771 DETAIL | R6 | 1/4"=1'-0"

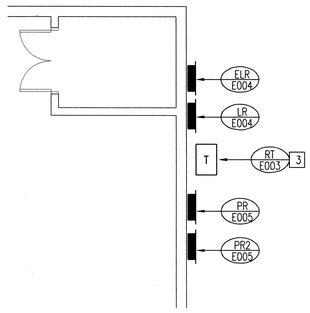

BUILDING R - ELECTRICAL DETAIL | H6 | 1/4"=1'-0"

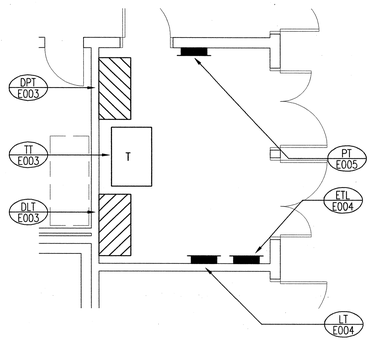

BUILDING T - ELECTRICAL ROOM 530 DETAIL | A6 | 1/4"=1'-0"

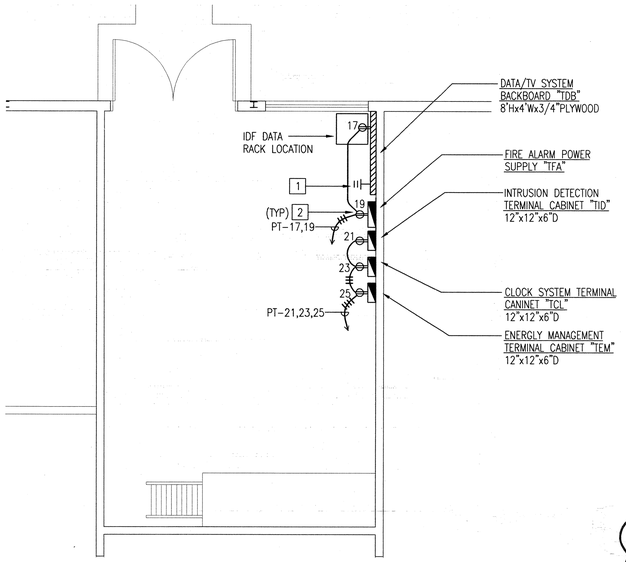

BUILDING T - ELECTRICAL ROOM 525 DETAIL | R12 | 1/4"=1'-0"

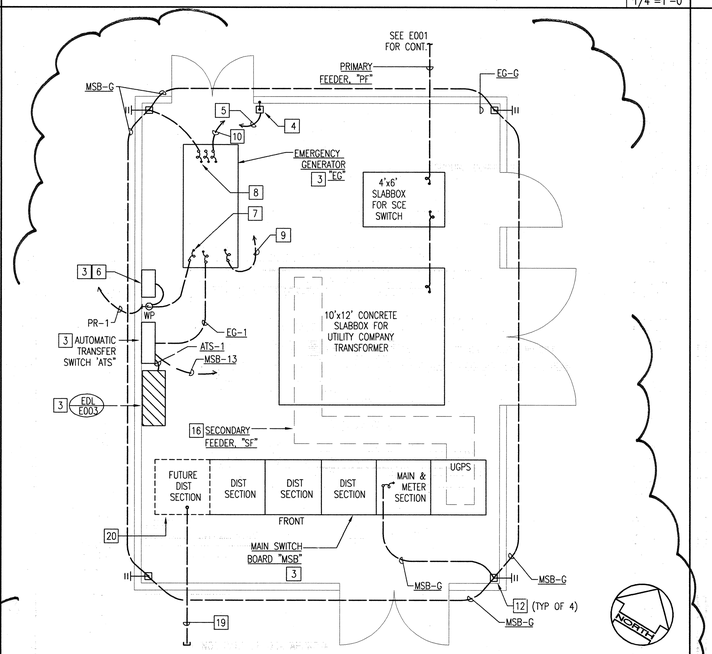

UTILITY ENCLOSURE DETAIL | H6 | 1/4"=1'-0"

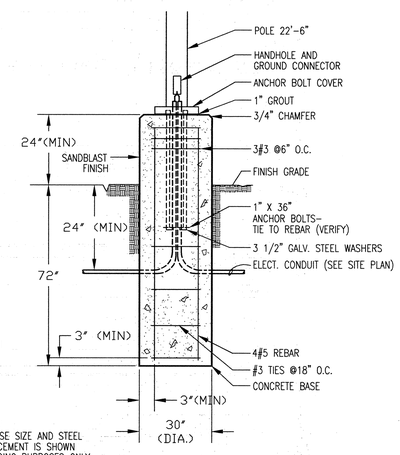

NOTES:
POLE BASE SIZE AND STEEL REINFORCEMENT IS SHOWN FOR BIDDING PURPOSES ONLY DETAIL SHALL BE VERIFIED BY A STRUCTURAL ENGINEER PRIOR TO CONSTRUCTION.

NOT PART OF DSA APPROVAL

PARKING LOT LIGHT POLE BASE DETAIL | A12 | NONE

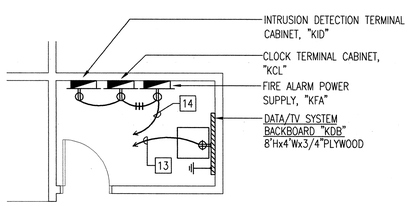

BUILDING K - ELECTRICAL ROOM 819 DETAIL | R19 | 1/4"=1'-0"

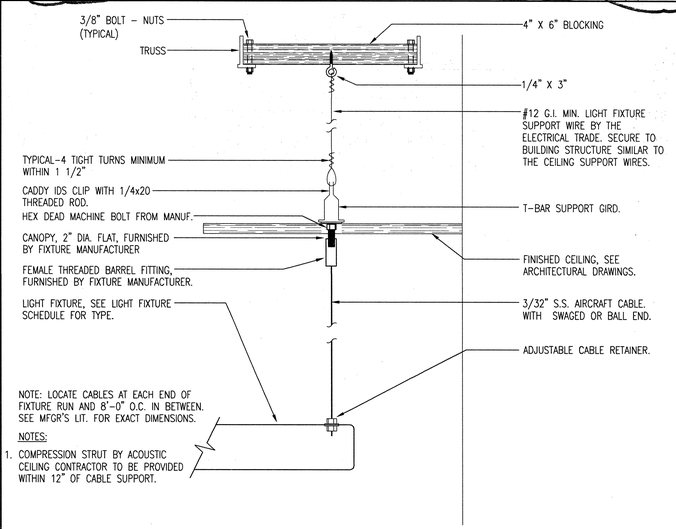

NOTE: LOCATE CABLES AT EACH END OF FIXTURE RUN AND 8'-0" O.C. IN BETWEEN. SEE MFGR'S LIT. FOR EXACT DIMENSIONS.

NOTES:
1. COMPRESSION STRUT BY ACOUSTIC CEILING CONTRACTOR TO BE PROVIDED WITHIN 12" OF CABLE SUPPORT.

SUSPENDED LIGHT FIXTURE DETAIL | H19 | NONE

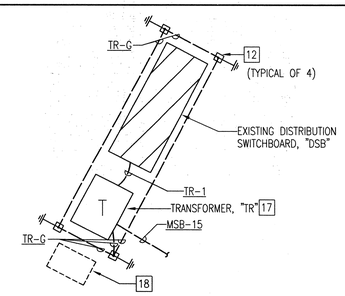

INTERIM HOUSING SWITCHBOARD DETAIL | A16 | 1/4"=1'-0"

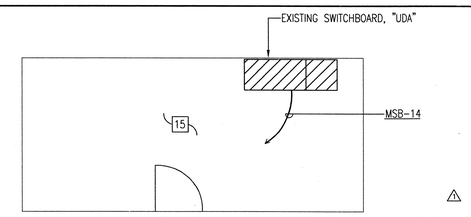

STADIUM - ELECTRICAL ROOM DETAIL | A19 | 1/4"=1'-0"

PLAN NOTES

1. PROVIDE 1#6 (GND) IN 3/4" CONDUIT TO BUILDING COLD WATER PIPE.
2. MOUNT RECEPTACLE IN TERMINAL CABINET.
3. PROVIDE 6" THICK REINFORCED CONCRETE PAD EXTENDING 4" BELOW GRADE, 2" ABOVE GRADE AND 6" BEYOND ALL FOUR SIDE OF EQUIPEMENT. SEE G4/ECO FOR ANCHORAGE DETAIL
4. EMERGENCY GENERATOR REMOTE MANUAL STOP SWITCH. ENGRAVE "GENERATOR SHUT-OFF".
5. 3/4"C WITH CONTROL WIRING AS REQUIRED TO "EG"
6. CONNECT TO BATTERY CHARGER AS REQUIRED.
7. CONNECT AS REQUIRED TO JACKET HEATER.
8. PROVIDE CONNECTION TO GENERATOR BATTERY AS REQUIRED. PROVIDE 1"C WITH CONTROL WIRING TO BATTERY CHARGER. VERIFY EXACT LOCATION.
9. 1"C WITH CONTROL WIRING TO "ATS".
10. PROVIDE 1"C WITH CONTROL WIRING TO EMERGENCY GENERATOR REMOTE ANNUCIATOR LOCATED IN ADMINSTRATION.
11. 1#3/0-1"C.
12. 12"x12"x12"D BOTTOMLESS CONCRETE PULLBOX WITH PEA-GREAVEL BASE AND 10 FT LONGx3/4" DIAMETER COPPER GROUND ROD. MOUNT PULLBOX FLUSH IN-GRADE COVER "GROUND". QUANTITY 25OHMS TO GROUND MAXIMUM.
13. PROVIDE 2#12 AND 1#12(GRD) IN 1/2"C. TO NEAREST 120V PANELBOARD. PROVIDE ONE 20AMP 1POLE CIRCUIT BREAKER IN SPACE OF EXISTING PANELBOARD. MATCH A.I.C. RATING OF EXISTING DEVICES.
14. PROVIDE 4#12 AND 1#12(GRD) IN 3/4"C. TO NEAREST 120V PANELBOARD. PROVIDE THREE 20AMP 1POLE CIRCUIT BREAKERS IN SPACES OF EXISTING PANELBOARD. MATCH A.I.C. RATING OF EXISTING DEVICES.
15. EXISTING ELECTRICAL TO REMAIN, UNLESS NOTED OTHERWISE.
16. PROVIDE CONCRETE CABLE TRENCH PER UTILITY COMPANY REQUIRMENTS.
17. DISCONNECT AND REMOVE EXISTING 4160//120/208V TRANSFORMER. PROVIDE NEW 480//120/208V TRANSFORMER, AS SPECIFIED, AND MOUNT ON EXISTING CONCRETE PAD.
18. DISCONNECT AND REMOVE OIL FILLED DISCONNECT SWITCH. REMOVE EXISTING FEEDERS, CUT BACK CONDUIT AND ABANDON IN PLACE.
19. EIGHT 4"C.O. STUB CONDUIT UP ABOVE HOUSEKEEPING PAD, AND CAP AT FUTURE DISTRIBUTION SECTION. CONDUIT SHALL BE EXTENDED OUT BEYOND THE UTILITY ENCLOSURE AND CAPPED BELOW GRADE. PROVIDE A FLUSH IN-GRADE MARKER.
20. HOUSE KEEPING PAD SHALL EXTEND DOWN TO ACCOMODATE THE FUTURE DISTRIBUTION SECTION INDICATED.

KEY PLAN

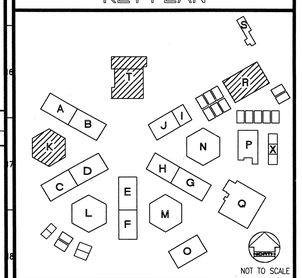

REVISED
MAY 12 2004
IDENTIFICATION STAMP
DIV. OF THE STATE ARCHITECT
OFFICE OF REGULATION SERVICES
FILE NO. 19-H51
APPL. NO. 03-106434
AC ____ FLS NI-1 SS ____
DATE ____

Dougherty ■ Dougherty
Architecture • Planning • Interior Design
3184-D Airport Loop Drive
Costa Mesa, CA 92626
(714) 427-0077

Copyright © 2002 Dougherty + Dougherty

GLP Engineering, Inc.
Mechanical Elec. Control Engineers
3185-C Airway Avenue
Costa Mesa, CA 92626-4601
Telephone (714) 751-1851
Fax (714) 751-4216

LICENSED ARCHITECT STATE OF CALIFORNIA JAMES R. DOUGHERTY NO. C-8824 EXP. JULY 31, 2005
Architect Seal

REGISTERED PROFESSIONAL ENGINEER STATE OF CALIFORNIA GLP ENGINEERING, INC. NO. E 17252 EXP. 6-30-04
Consultant Seal

LA MIRADA HIGH SCHOOL MODERNIZATION
NORWALK - LA MIRADA UNIFIED SCHOOL DISTRICT
13520 ADELFA DRIVE LA MIRADA, CA 90638

ELECTRICAL DETAILS

Date:	05-11-04
Job:	20237.50
Scale:	1/8"=1'-0"
Drawn:	GLPK
Revisions:	
1	12-01-03

E502

P:\Clients\DAA\Norwalk-LaMirada SD\La Mirada HS Modernization 105.045\Drawings\105045e502.dwg May 11, 2004 - 3:02pm