DRAWING INDEX

E1.00	DRAWING INDEX AND GENERAL NOTES	FOR APPROVAL	01/05/2023
E2.00	FOUNDATION PLAN	FOR APPROVAL	01/05/2023
E2.01	ENLARGED FOUNDATION PLANS	FOR APPROVAL	01/05/2023
E2.02	CIP ELEVATION	FOR APPROVAL	01/05/2023
E2.03	FOUNDATION DETAILS (F1 - F12)	FOR APPROVAL	01/05/2023
E2.04	FOUNDATION DETAILS (F13 - F21)	FOR APPROVAL	01/05/2023
E4.00	NORTH EXTERIOR ELEVATION	FOR APPROVAL	01/05/2023
E4.00B	NORTH EXTERIOR ELEVATION-BRICK	FOR APPROVAL	01/05/2023
E4.01	EAST EXTERIOR ELEVATION	FOR APPROVAL	01/05/2023
E4.01B	EAST EXTERIOR ELEVATION-BRICK	FOR APPROVAL	01/05/2023
E4.02	SOUTH EXTERIOR ELEVATION	FOR APPROVAL	01/05/2023
E4.03	WEST EXTERIOR ELEVATION	FOR APPROVAL	01/05/2023
E4.03B	WEST EXTERIOR ELEVATION-BRICK	FOR APPROVAL	01/05/2023
E4.04	INTERIOR RAMP WALL ELEVATION	FOR APPROVAL	01/05/2023
E4.05	INTERIOR SHEAR WALL ELEVATIONS & CLOSURE SPANDRELS	FOR APPROVAL	01/05/2023
E4.06	BANDS PLAN 1	FOR APPROVAL	01/05/2023
E4.07	BANDS PLAN 2	FOR APPROVAL	01/05/2023
E6.00	SECTIONS AND DETAILS (1-12)	FOR REFERENCE	12/15/2022
E6.01	SECTIONS AND DETAILS (13-24)	FOR REFERENCE	12/15/2022
E6.02	SECTIONS AND DETAILS (25-36)	FOR REFERENCE	12/15/2022
E6.03	SECTIONS AND DETAILS (37-48)	FOR REFERENCE	12/15/2022
E6.04	SECTIONS AND DETAILS (49-60)	FOR APPROVAL	01/05/2023
E6.05	SECTIONS AND DETAILS (61-72)	FOR APPROVAL	01/05/2023
E6.06	SECTIONS AND DETAILS (73-84)	FOR APPROVAL	01/05/2023
E6.07	SECTIONS AND DETAILS (85-96)	FOR APPROVAL	01/05/2023
E6.08	SECTIONS AND DETAILS (97-108)	FOR APPROVAL	01/05/2023

GRANITE RUN PHASE II PARKING GARAGE

MIDDLETOWN TOWNSHIP, PA

GENERAL CONTRACTOR:

BT Granite Run Apartments 2, LP

STRUCTURAL ENGINEER:

BALA Engineers
443 South Gulp Road
King of Prussia, PA 19406

ARCHITECT:

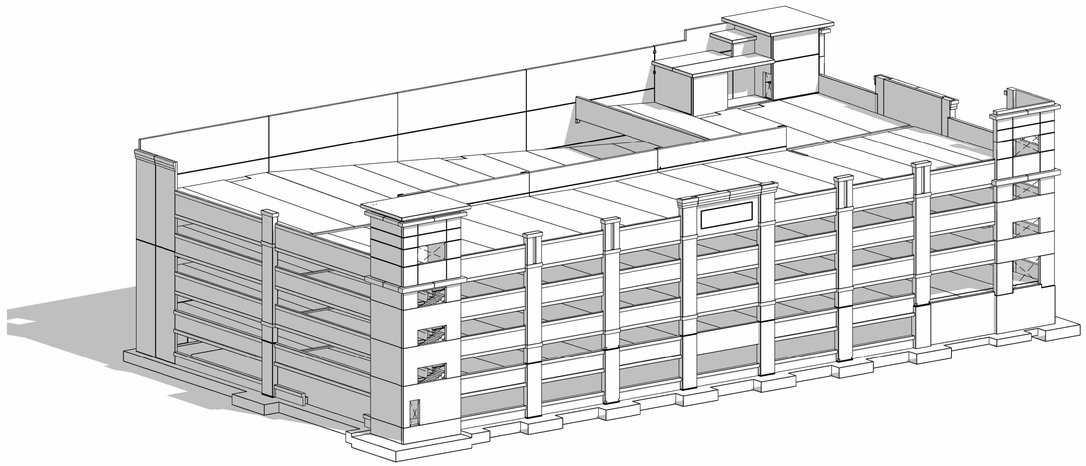
THE MARTIN ARCHITECTURAL GROUP
240 North 22nd Street
Philadelphia, PA, 19103

PRECASTER:

JERSEY PRECAST
853 Nottingham Way
Hamilton Township, NJ 08638

PRECAST SPECIALTY ENGINEER:

THE CONSULTING ENGINEERS GROUP INC, A TEXAS CORP. 16302 PLESANTVILLE ROAD - SUITE 100 SAN ANTONIO, TX 78233



ABBREVIATIONS:

"JPC" = Jersey Precast Inc.
"CEG" = The Consulting Engineering Group (Texas)
"A/E/C" = Architect / Engineer (Structural Enginner of Record) / Contractor (General)
"C.I.P" = Cast-in-Place Concrete
"DBA" = Deformed Bar Anchor
"DIA" = Diameter
"DT" or "T" = Double Tee
"EA" = Each
"EL" = Elevation
"FF" = Finished Floor
"HAS" = Headed Anchor Stud
"HSS" = Hollow Structural Steel (i.e. steel tube)
"ID" = Inner Diameter
"IT" = Inverted-tee Beam/Girder
"JT" = Joint
"L" = Angle
"LG" = Long
"O.H." = Opposite Hand
"PL" = Plate
"PROJ." = Projection
"SIM" = Similar
"U.N.O." = Unless Noted Otherwise

ERECTION NOTES

E-1 Access to and on the job site shall be maintained by the Owner/General Contractor at all times, so that erection and delivery equipment can move under their own power and work uninterrupted.

E-2 Precast components shall be temporarily braced at time of erection until final connections are made and building is stable.

E-3 Dry pack between column and foundation shall have a minimum strength of 8000 psi. Dry pack at wall panel to wall panel horizontal joints and wall panel to foundation joints and at column splices shall have a minimum strength of 6000 psi.

E-4 Dry packing under column base plates shall be done prior to erecting more than 1 supported level.

E-5 Dry packing under load bearing walls shall be done prior to erecting more than 1 supported level.

E-6 Wall panels to be erected on shims located near the ends of the panel or as shown on the erection drawings.

E-7 Precast components shall be erected within PCI tolerances.

E-8 DT's shall be erected to obtain approximately the same bearing length at both ends. A minimum of 4 1/2" bearing is required.

E-9 Bearing pads shall be placed square and flush with ends of beams, double tees and spandrels.

E-10 Welding shall follow AWS procedures. Use E70XX electrodes unless noted otherwise. For galvanized connections, the use of 6011 electrodes in lieu of grinding off galvanizing, is acceptable.

E-11 Where shims are required, if more than one shim is required, steel shims shall be used and tack welded together up to 3 total shims. Shim heights greater than 2" shall be approved by CEG.

E-12 Openings smaller than 6" shall be core-drilled or saw-cut in the field by others after approval by JPC. Drain openings shall be field-drilled as shown in these drawings.

E-13 Where necessary, the precast erector shall shim double tee and beam bearing conditions to bring offsets within tolerance.

E-14 The precast erector shall provide shoring as required under beams to prevent "rolling" as load is temporarily applied to one side only (ex. Loading IT-beams unevenly during the erection process).

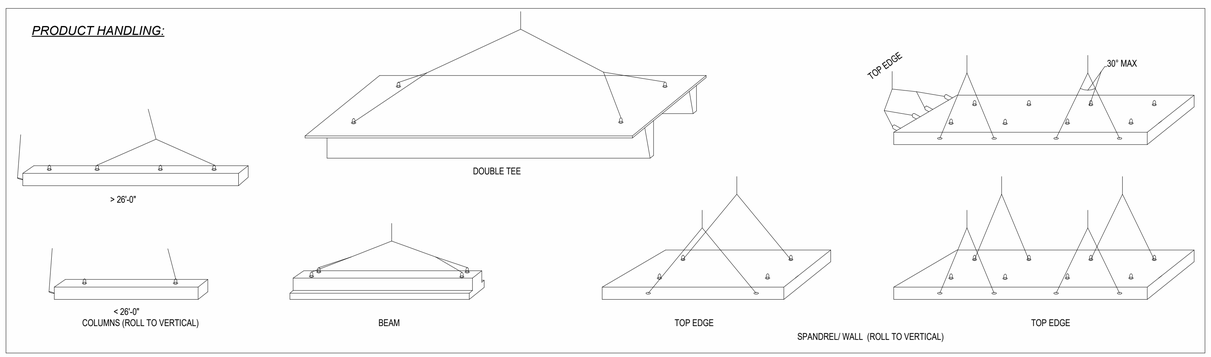
E-15 The joint width between adjacent precast double tee members will increase at the ramps. The precast erector shall account for this increase when erecting these members.

E-16 During erection, stability of structure shall be maintained at all times until all connections are completed. The engineering design of a bracing plan is not by CEG.

E-17 Connections of lateral load elements shall be made upon erection of the floor units.

E-18 Dry-pack or flowable grout 8,000 psi(min.) in joint. Grout shall be installed prior to erecting DTs.

PRODUCT HANDLING:



COMMONWEALTH OF PENNSYLVANIA
REGISTERED PROFESSIONAL
CHRIS C. KERCSMAR
ENGINEER
PE082269

DRAWN BY: OPK
CHECKED BY:
DATE: 10/21/2022

SUBMITTALS/REVISIONS:

A	FOR APPROVAL	01/05/23

The CONSULTING ENGINEERS GROUP Inc.
16302 Pleasantville Road - SUITE 100 - SAN ANTONIO, TX 78233
PH 830-980-9782 FAX 210-630-1172 E-MAIL engineers@cegtx.com

PROJECT:
GRANITE RUN PHASE II
MIDDLETOWN TOWNSHIP, PA
DRAWING INDEX AND GENERAL NOTES

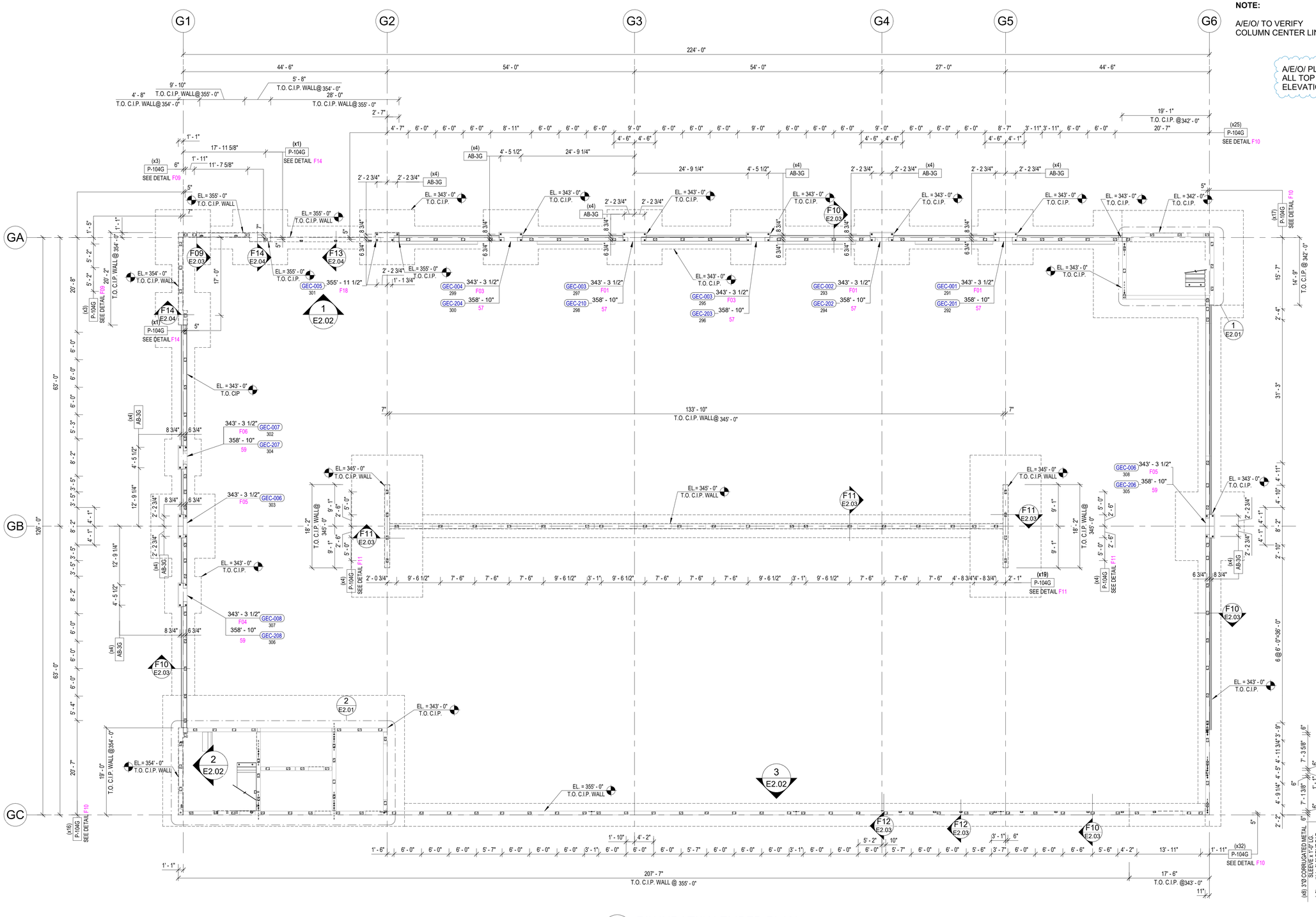
JERSEY PRECAST
853 NOTTINGHAM WAY
HAMILTON TOWNSHIP, NJ 08638
PH: 609-689-3700 FAX: 609-689-3797

CEG JOB NO. 22551
JOB NO. 22040
SHEET NO. E1.00

NOTE:

A/E/O/ TO VERIFY
COLUMN CENTER LINES AND ELEVATION

A/E/O/ PLEASE VERIFY
ALL TOP OF C.I.P.
ELEVATIONS



1 FOUNDATION EMBED PLAN
E2.00 SCALE: 1" = 10'-0"

COMMONWEALTH OF PENNSYLVANIA
REGISTERED PROFESSIONAL
CHRIS C. KERCSMAR
ENGINEER
PE062289

NORTH

MARK # C - 001 -1' - 0" F01 — BOT. OF COLUMN — DENOTES COLUMN MARK FACE
CONTROL NUMBER
DETAIL NUMBER

PIECE MARKS

DRAWN BY: ODS
CHECKED BY: OVV
DATE: 12/19/2022

SUBMITTALS/REVISIONS:

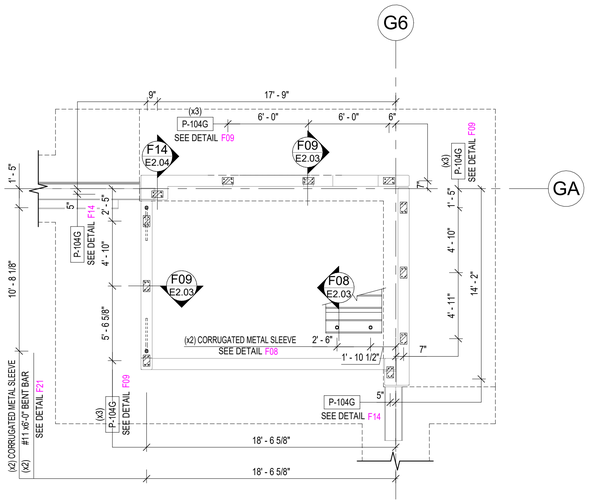
A	FOR APPROVAL	01/05/23

The CONSULTING ENGINEERS GROUP Inc.
14302 Piedmont Rd - Suite 105 - San Antonio, TX 78233
ph 832-39377 fax (210) 637-1172 E-mail: engineers@cegtx.com

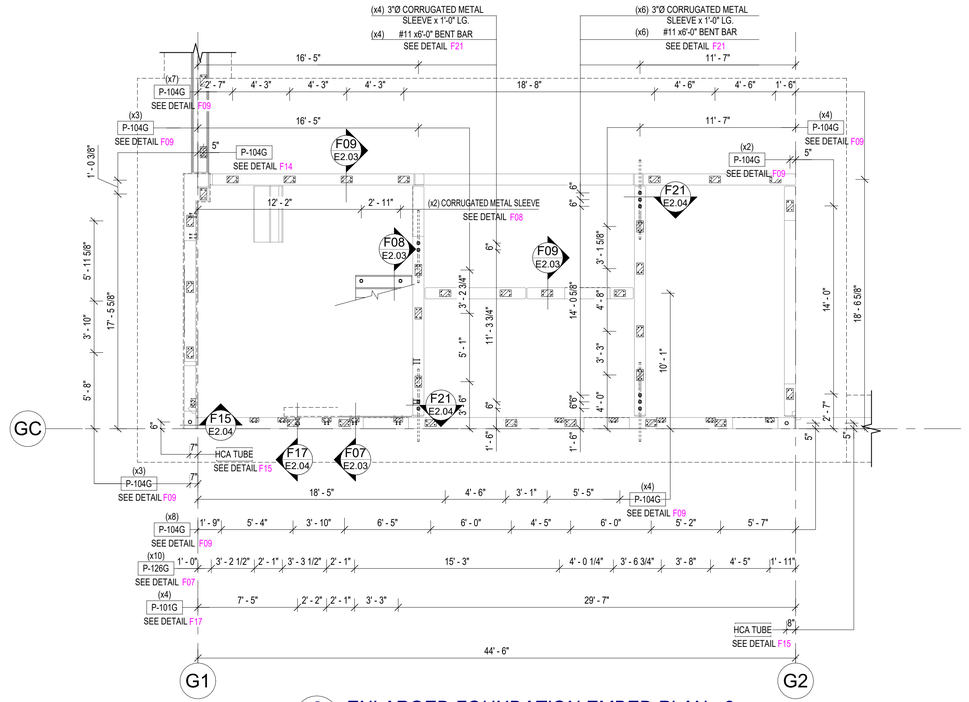
PROJECT:
GRANITE RUN PHASE II
MIDDLETOWN TOWNSHIP, PA
FOUNDATION PLAN

JERSEY PRECAST
853 NOTTINGHAM WAY
HAMILTON TOWNSHIP, NJ 08638
PH: 609-689-3700 FAX: 609-689-3797

CEG JOB NO. 22551
JOB NO. 22040
SHEET NO. E2.00

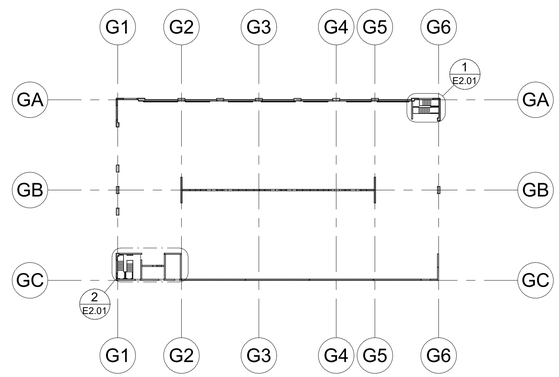


1 E2.01 *ENLARGED FOUNDATION EMBED PLAN - 1*
SCALE: 3/16" = 1'-0"



2 E2.01 *ENLARGED FOUNDATION EMBED PLAN - 2*
SCALE: 3/16" = 1'-0"

COMMONWEALTH OF PENNSYLVANIA
REGISTERED PROFESSIONAL
CHRIS C. KERCSMAR
ENGINEER
PE062269



KEY PLAN

DRAWN BY: ODS
CHECKED BY:
DATE:

SUBMITTALS/REVISIONS:

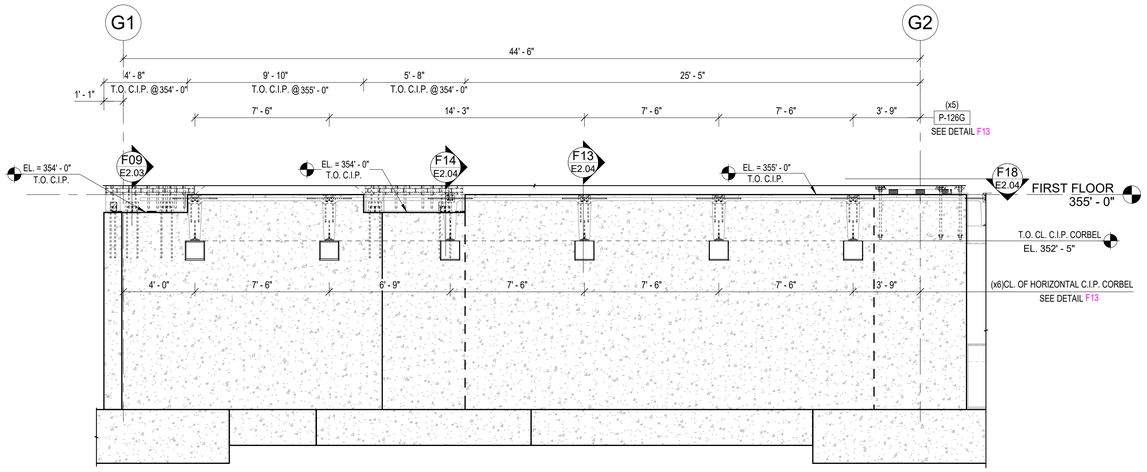
A	FOR APPROVAL	01/05/23

THE CONSULTING ENGINEERS GROUP, Inc.
14352 Photosynthesis Road - Suite 105 - San Antonio, TX 78233
Ph 830-637-9377 Fax 210-637-1172 E-mail: engineers@cegtx.com

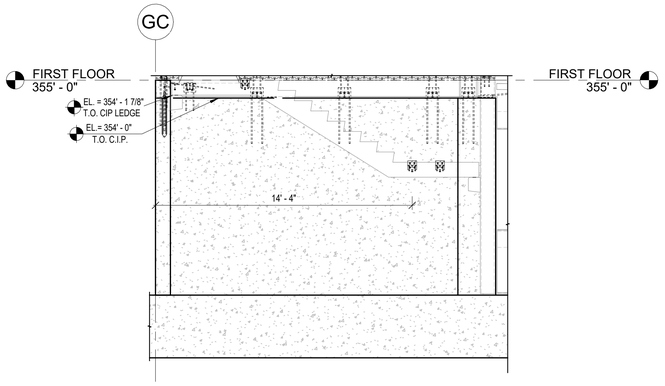
PROJECT:
GRANITE RUN PHASE II
MIDDLETOWN TOWNSHIP, PA
ENLARGED FOUNDATION PLANS

JERSEY PRECAST
853 NOTTINGHAM WAY
HAMILTON TOWNSHIP, NJ 08638
PH: 609-689-3700 FAX: 609-689-3797

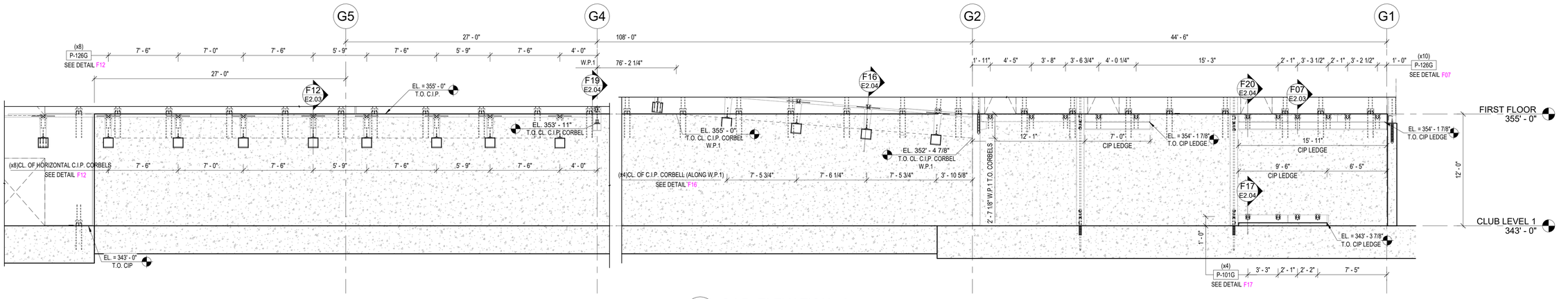
CEG JOB NO. 22551
JOB NO. 22040
SHEET NO. E2.01



1 *C.I.P. ELEVATION - 1*
E2.02 SCALE: 1/4" = 1'-0"

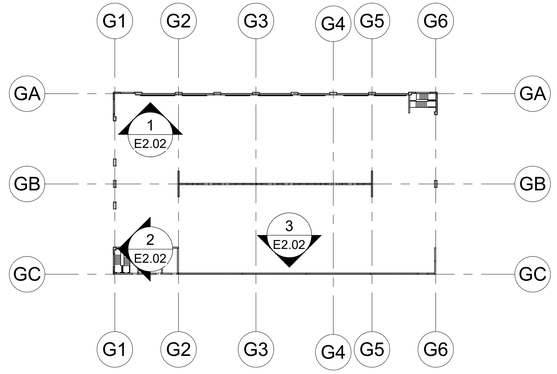


2 *C.I.P. ELEVATION - 2*
E2.02 SCALE: 1/4" = 1'-0"



3 *C.I.P. ELEVATION - 3*
E2.02 SCALE: 3/16" = 1'-0"





KEY PLAN

DRAWN BY: ODS
CHECKED BY:
DATE: 12/02/22

SUBMITTALS/REVISIONS:

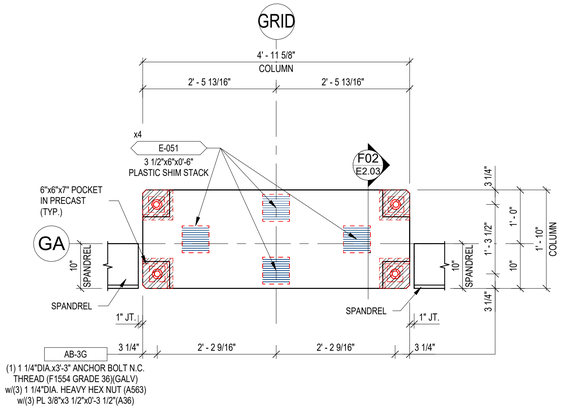
A	FOR APPROVAL	01/05/23

THE CONSULTING ENGINEERS GROUP, Inc.
1400 Peachtree Road - Suite 100 - Gas Anthem, TX 78231
PH: 610-837-9377 FAX: (215) 630-1172 E-MAIL: engineers@cegpa.com

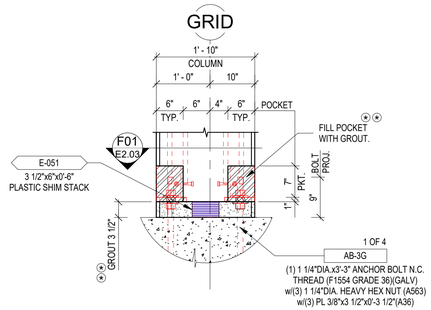
PROJECT:
GRANITE RUN PHASE II
MIDDLETOWN TOWNSHIP, PA
CIP ELEVATION

JERSEY PRECAST
853 NOTTINGHAM WAY
HAMILTON TOWNSHIP, NJ 08638
PH: 609-689-3700 FAX: 609-689-3797

CEG JOB NO. 22551
JOB NO. 22040
SHEET NO. E2.02



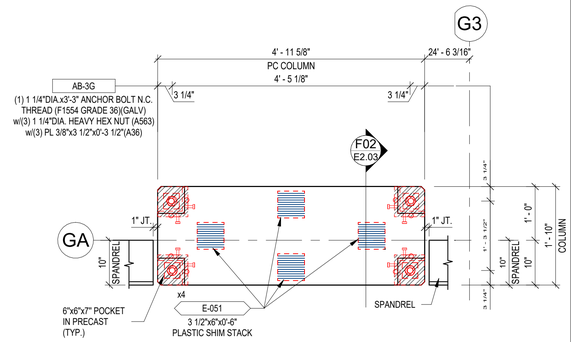
F01



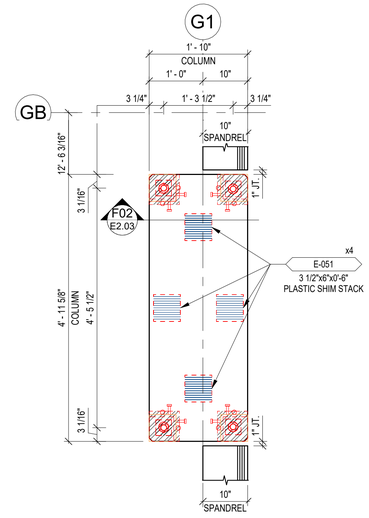
ERECTOR NOTE

DRY-PACK OR FLOWABLE GROUT 6,000 PSI (MIN.) IN JOINT.
GROUT SHALL BE INSTALLED PRIOR TO ERECTING DTs.
DRY PACK MIX(NON-SHRINK 8000 PSI OR AS NOTED)
DRY PACK IMMEDIATELY AFTER COLUMN
IS ERECTED & ALL NUTS ARE TIGHT.

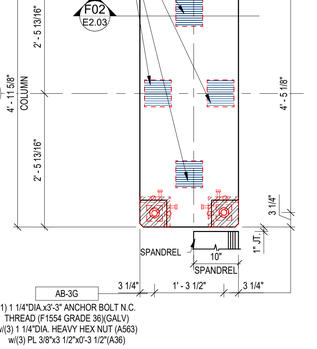
F02



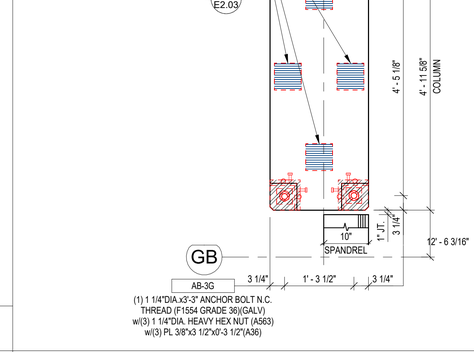
F03



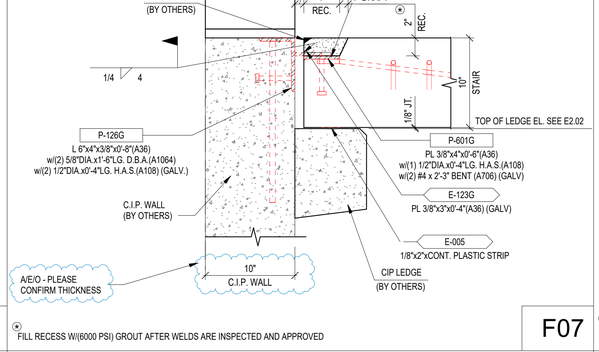
F04



F05

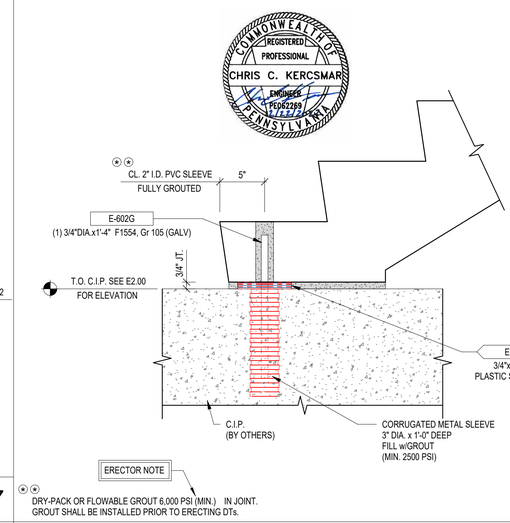


F06

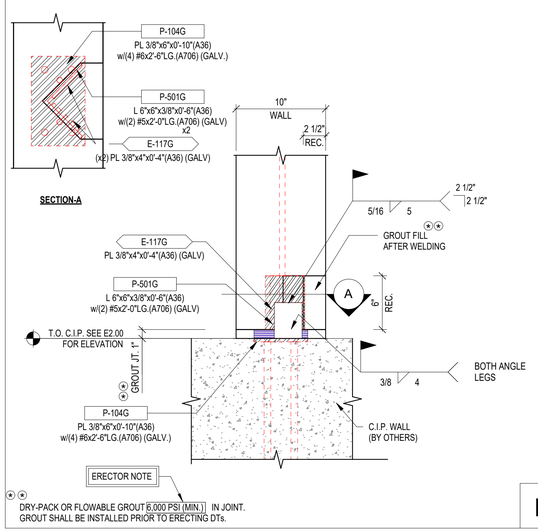


FILL RECESS W/(6000 PSI) GROUT AFTER WELDS ARE INSPECTED AND APPROVED

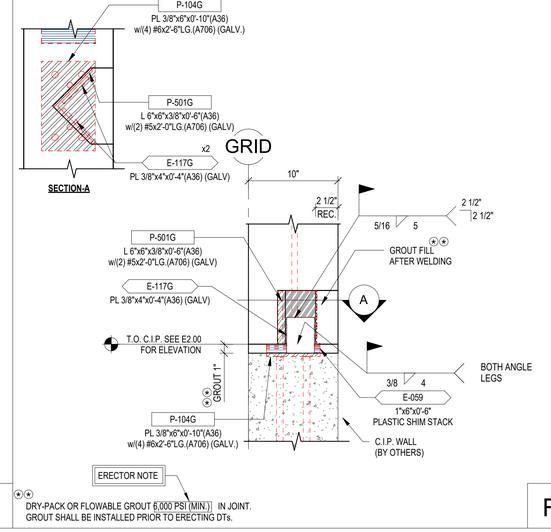
F07



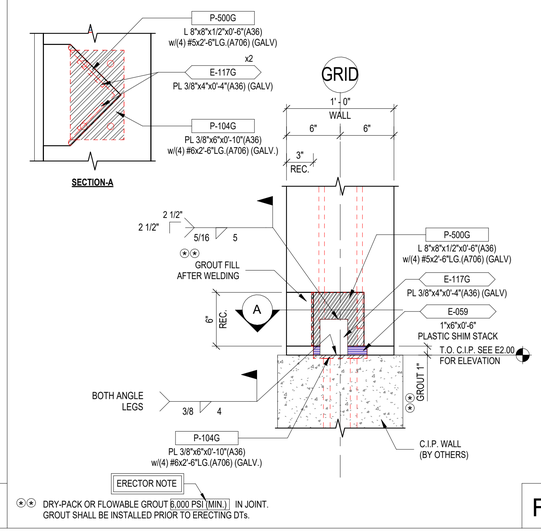
F08



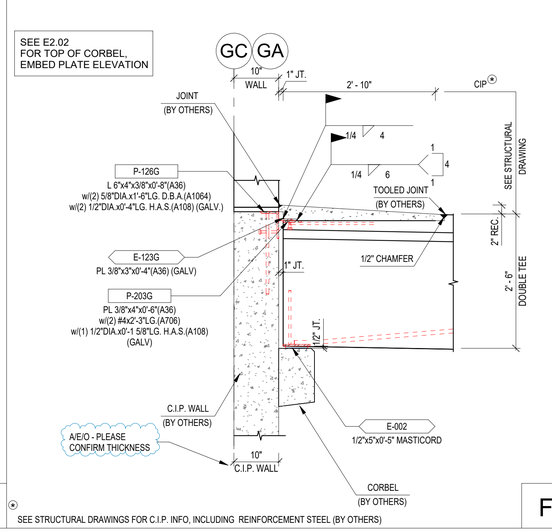
F09



F10



F11



SEE STRUCTURAL DRAWINGS FOR C.I.P. INFO, INCLUDING REINFORCEMENT STEEL (BY OTHERS)

F12

DRAWN BY: OOM
CHECKED BY: OVV
DATE: 11/26/22

SUBMITTALS/REVISIONS:

		01/05/23
A	FOR APPROVAL	

The CONSULTING ENGINEERS GROUP Inc.
14202 Pecksenville Road - SUITE 105 - SAN ANTONIO, TX 78233
PH 830-980-9779 FAX (210) 435-1172 E-MAIL engineers@cegtex.com

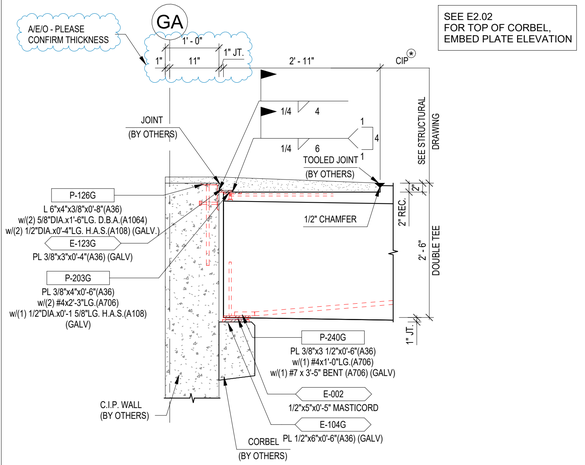
PROJECT:
GRANITE RUN PHASE II
MIDDLETOWN TOWNSHIP, PA.
FOUNDATION DETAILS (F1 - F12)

JERSEY PRECAST
853 NOTTINGHAM WAY
HAMILTON TOWNSHIP, NJ 08638
PH: 609-689-3700 FAX: 609-689-3797

CEG JOB NO.
22551

JOB NO.
22040

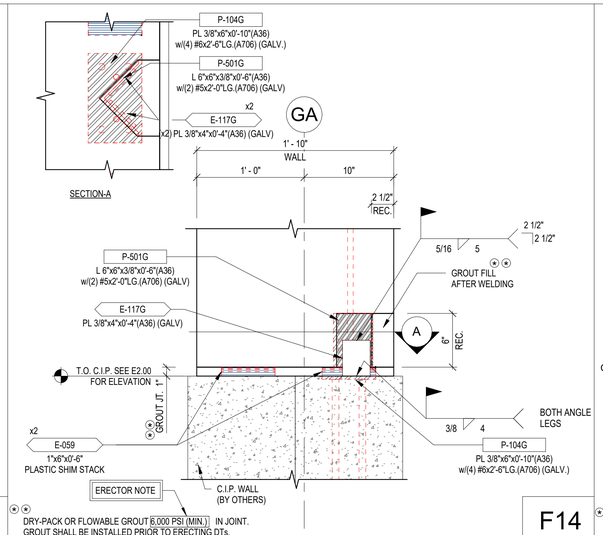
SHEET NO.
E2.03



SEE E2.02
FOR TOP OF CORBEL,
EMBED PLATE ELEVATION

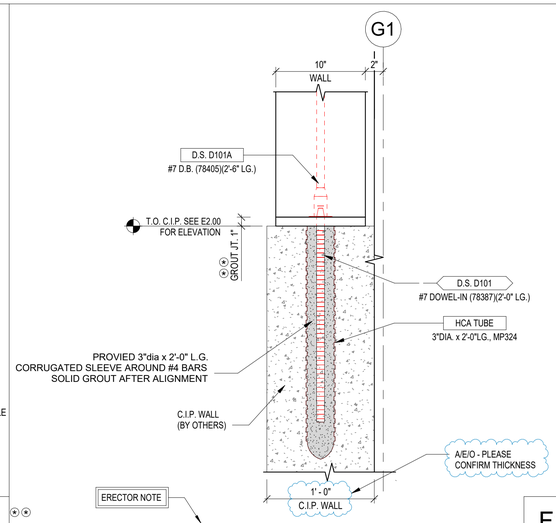
SEE STRUCTURAL DRAWINGS FOR C.I.P. INFO, INCLUDING REINFORCEMENT STEEL (BY OTHERS)

F13



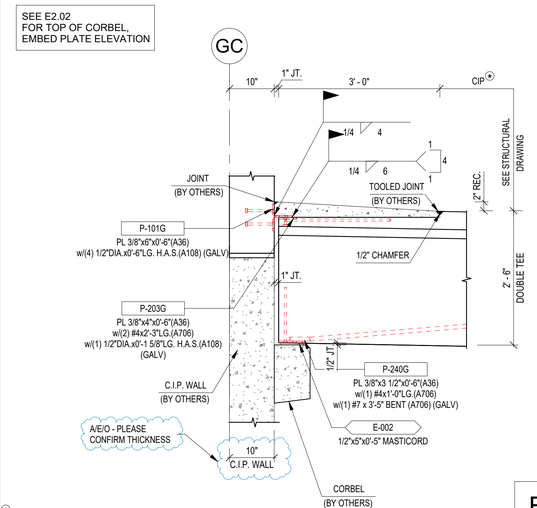
DRY-PACK OR FLOWABLE GROUT 6,000 PSI (MIN.) IN JOINT.
GROUT SHALL BE INSTALLED PRIOR TO ERECTING DTs.

F14



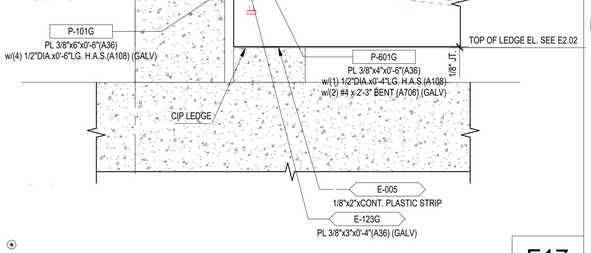
DRY-PACK OR FLOWABLE GROUT 6,000 PSI (MIN.) IN JOINT.

F15



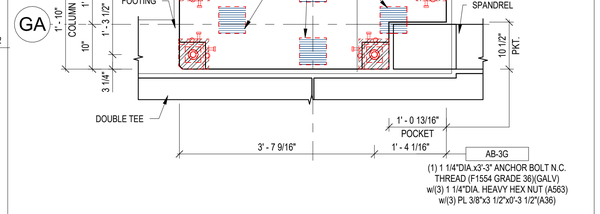
SEE STRUCTURAL DRAWINGS FOR C.I.P. INFO, INCLUDING REINFORCEMENT STEEL (BY OTHERS)

F16



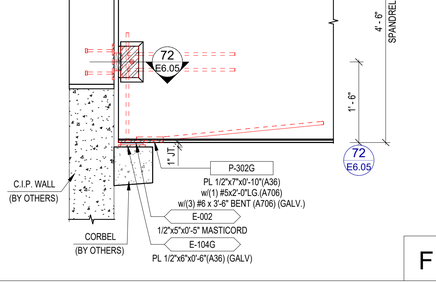
FILL RECESS W/(6000 PSI) GROUT AFTER WELDS ARE INSPECTED AND APPROVED

F17

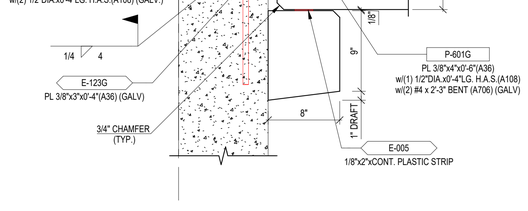


F18

SEE E2.02
FOR TOP OF CORBEL,
EMBED PLATE ELEVATION

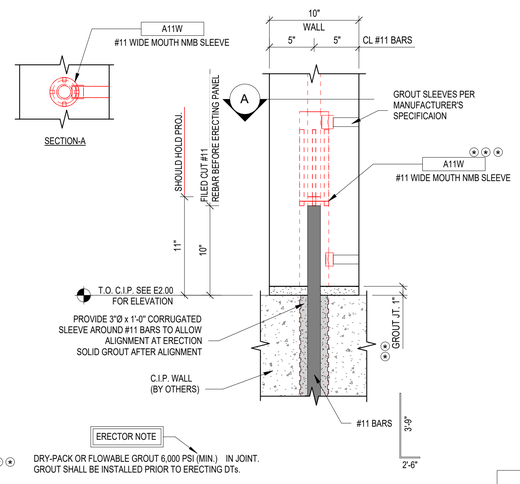


F19



FILL RECESS W/(6000 PSI) GROUT AFTER WELDS ARE INSPECTED AND APPROVED

F20



DRY-PACK OR FLOWABLE GROUT 6,000 PSI (MIN.) IN JOINT.
GROUT SHALL BE INSTALLED PRIOR TO ERECTING DTs.

NMB SLEEVES TO BE GROUTED W/SS MORTAR PER THE MANUFACTURER'S SPECIFICATIONS

F21

COMMONWEALTH OF PENNSYLVANIA
REGISTERED PROFESSIONAL
CHRIS C. KERCSMAR
ENGINEER
PE062289
12/05/22

DRAWN BY: OAS
CHECKED BY:
DATE: 12/05/22

SUBMITTALS/REVISIONS:

A	FOR APPROVAL	01/05/23

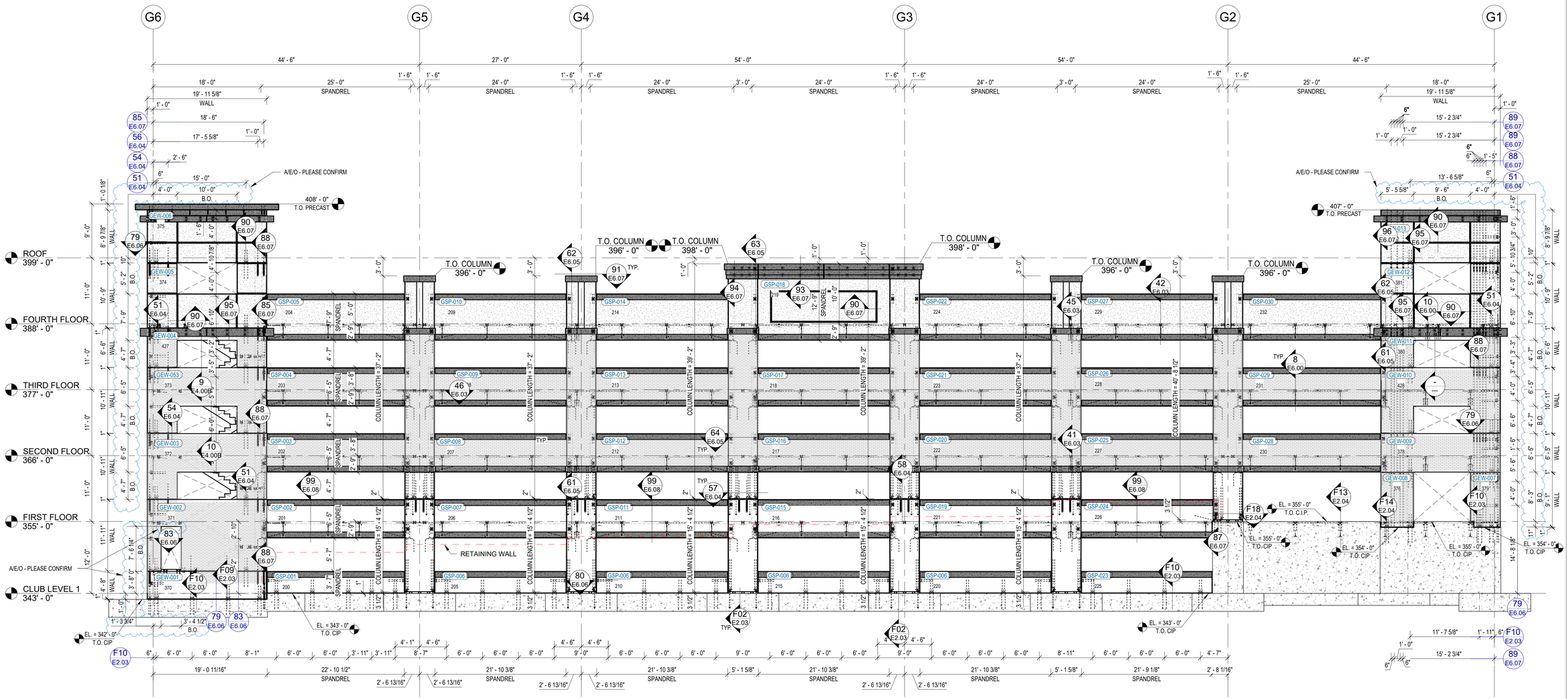
The CONSULTING ENGINEERS GROUP Inc.
14302 Parkdale Road - Suite 105 - SAN ANTONIO, TX 78233
PH 637-9977 FAX 1710 637-1172 E-MAIL engineers@cegtex.com

PROJECT:
GRANITE RUN PHASE II
MIDDLETOWN TOWNSHIP, PA.
FOUNDATION DETAILS (F13 - F21)

JERSEY PRECAST
853 NOTTINGHAM WAY
HAMILTON TOWNSHIP, NJ 08638
PH: 609-689-3700 FAX: 609-689-3797

CEG JOB NO. 22551
JOB NO. 22040
SHEET NO. E2.04

SEE E4.00B FOR BRICK LAYOUT AND REVEAL

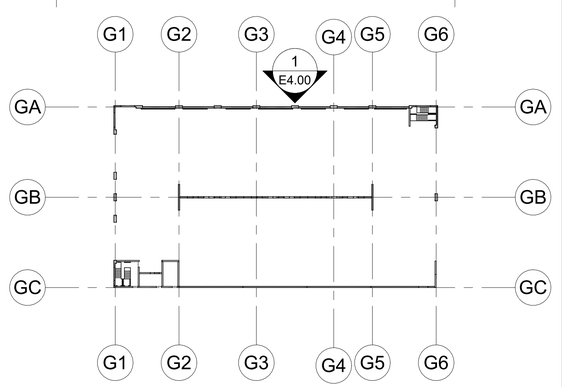


1 NORTH ELEVATION
E4.00 SCALE: 1/8" = 1'-0"

COMMONWEALTH OF PENNSYLVANIA
REGISTERED PROFESSIONAL
CHRIS C. KERCSMAR
ENGINEER
PE062208

NOTES:

- = STERLING GREY, SANDBLAST FINISH
- = STAINED DARK GREY, SANDBLAST FINISH
- = C.I.P. CONCRETE
- = PRECAST PANEL WITH THIN BRICK, GREY CONCRETE
- = GREY CONCRETE, FROM FINISH (EXCEPT FOR COLUMN WHICH WILL BE STERLING GREY)



KEY PLAN

DRAWN BY: OAS
CHECKED BY: OVV
DATE: 11/07/22

SUBMITTALS/REVISIONS:

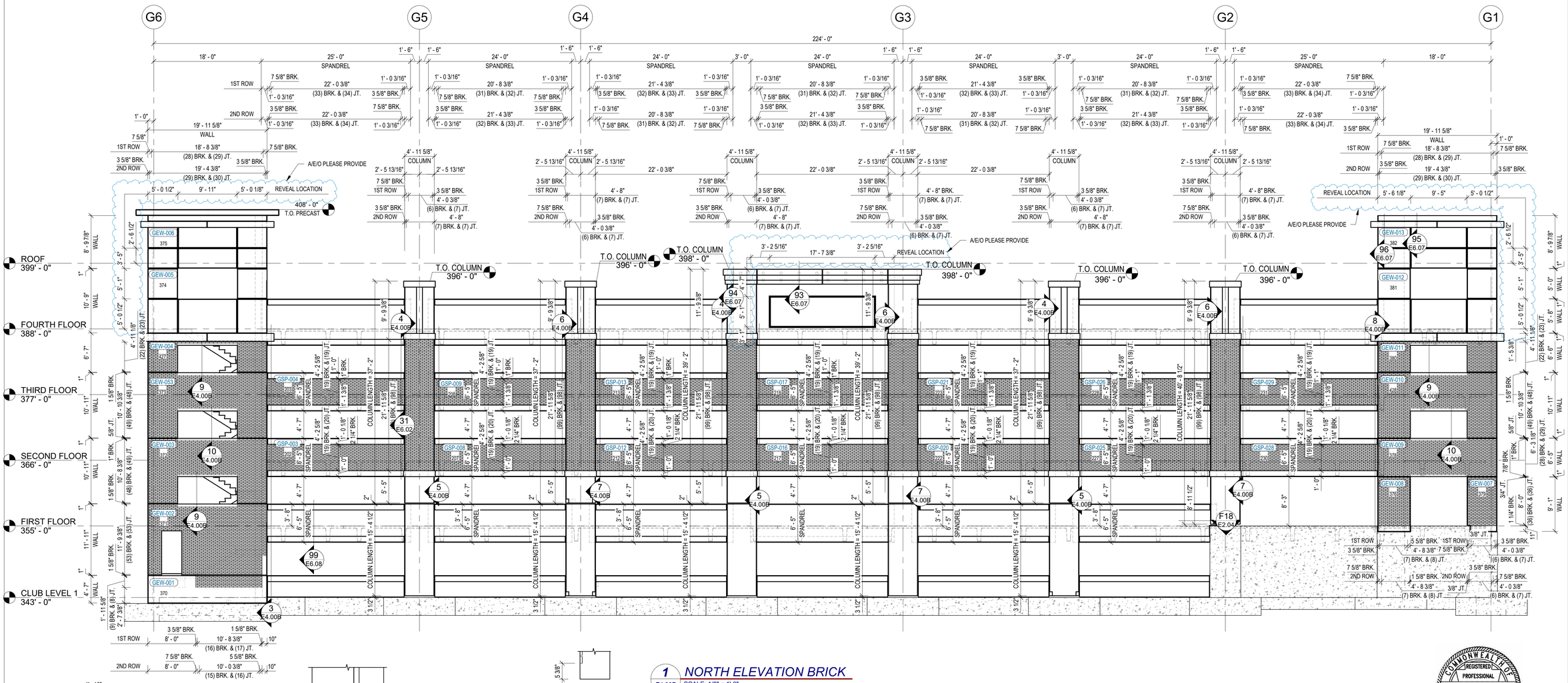
A	FOR APPROVAL	01/05/23

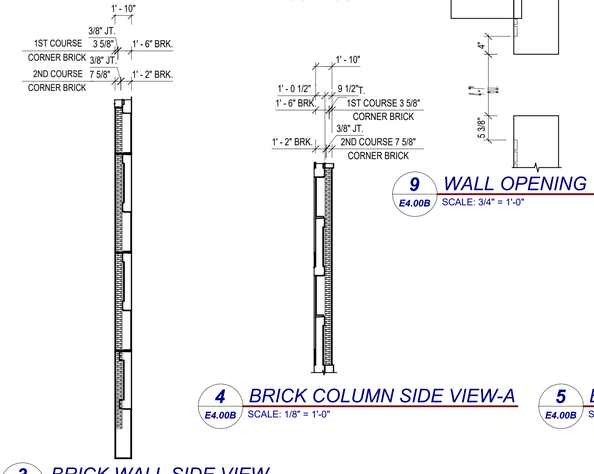
PROJECT:
GRANITE RUN PHASE II
MIDDLETOWN TOWNSHIP, PA
NORTH EXTERIOR ELEVATION

THE CONSULTING ENGINEERS GROUP Inc.
14202 Phantom Row - Suite 100 - San Antonio, TX 78231
ph 830.493.9377 fax 210.435.1172 E-MAIL engineers@cegtx.com

JERSEY PRECAST
853 NOTTINGHAM WAY
HAMILTON TOWNSHIP, NJ 08638
PH: 609-689-3700 FAX: 609-689-3797

CEG JOB NO. 22551
JOB NO. 22040
SHEET NO. E4.00





3 BRICK WALL SIDE VIEW
E4.00B SCALE: 1/8" = 1'-0"

1 NORTH ELEVATION BRICK
E4.00B SCALE: 1/8" = 1'-0"

9 WALL OPENING 1
E4.00B SCALE: 3/4" = 1'-0"

10 WALL OPENING 2
E4.00B SCALE: 3/4" = 1'-0"

4 BRICK COLUMN SIDE VIEW-A
E4.00B SCALE: 1/8" = 1'-0"

5 BRICK COLUMN SIDE VIEW-B
E4.00B SCALE: 1/8" = 1'-0"

6 BRICK COLUMN SIDE VIEW-C
E4.00B SCALE: 1/8" = 1'-0"

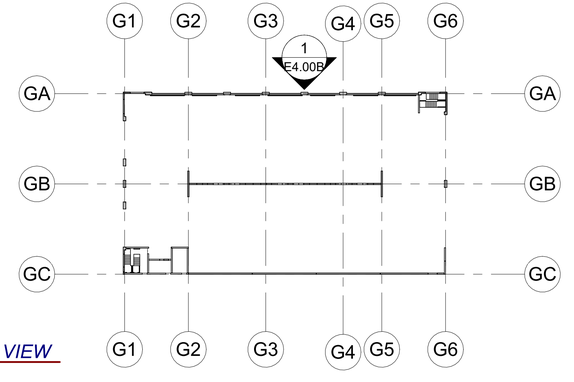
7 BRICK COLUMN SIDE VIEW-D
E4.00B SCALE: 1/8" = 1'-0"

8 BRICK WALL SIDE VIEW
E4.00B SCALE: 1/8" = 1'-0"

NOTE:

SEE CONNECTION FOR BRICK PANEL ON SHEET E4.00

COMMONWEALTH OF PENNSYLVANIA
REGISTERED PROFESSIONAL
CHRIS C. KERCSMAR
ENGINEER
PE062289



DRAWN BY: OAS
CHECKED BY:
DATE: 12/02/22

SUBMITTALS/REVISIONS:

A	FOR APPROVAL	01/05/23

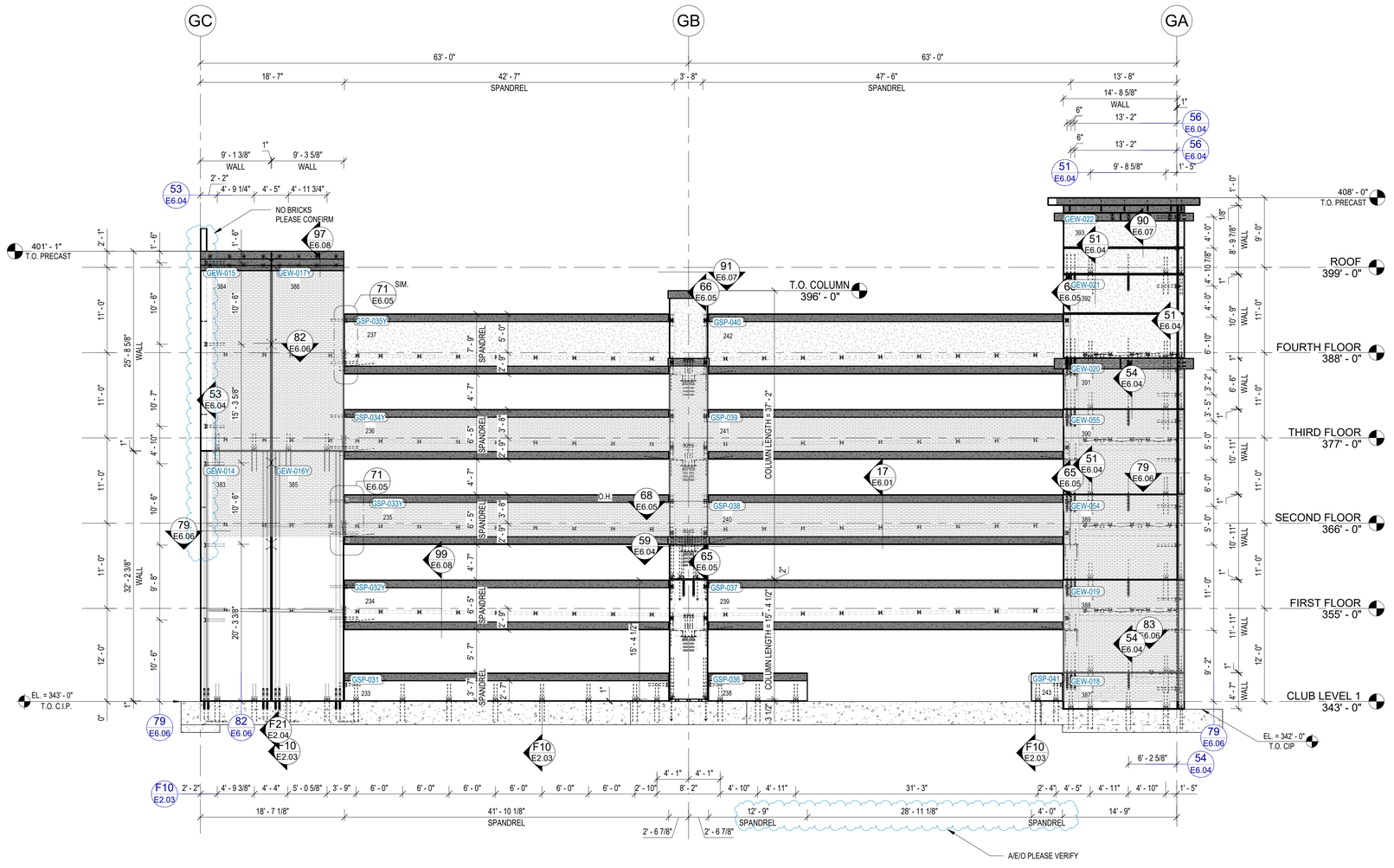
PROJECT:
GRANITE RUN PHASE II
MIDDLETOWN TOWNSHIP, PA
NORTH EXTERIOR ELEVATION-BRICK

The CONSULTING ENGINEERS GROUP Inc.
14202 Pecanland Blvd. - Suite 100 - San Antonio, TX 78233
PH 830-755-8777 FAX 210-435-1172 E-MAIL engineers@cegtex.com

JERSEY PRECAST
853 NOTTINGHAM WAY
HAMILTON TOWNSHIP, NJ 08638
PH: 609-689-3700 FAX: 609-689-3797

CEG JOB NO. 22551
JOB NO. 22040
SHEET NO. E4.00B

SEE E4.01B FOR BRICK LAYOUT AND REVEAL

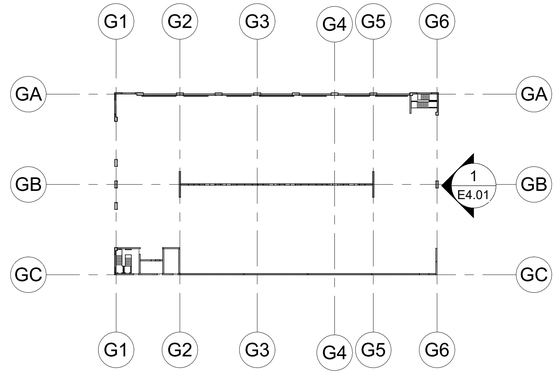


1 EAST ELEVATION

E4.01 SCALE: 1/8" = 1'-0"

NOTES:

- = STERLING GREY, SANDBLAST FINISH
- = STAINED DARK GREY, SANDBLAST FINISH
- = C.I.P. CONCRETE
- = PRECAST PANEL WITH THIN BRICK, GREY CONCRETE
- = GREY CONCRETE, FROM FINISH (EXCEPT FOR COLUMN WHICH WILL BE STERLING GREY)



KEY PLAN

COMMONWEALTH OF PENNSYLVANIA
REGISTERED PROFESSIONAL
CHRIS C. KERCSMAR
ENGINEER
PE062289

DRAWN BY: OAS
CHECKED BY:
DATE: 10/26/22

SUBMITTALS/REVISIONS:

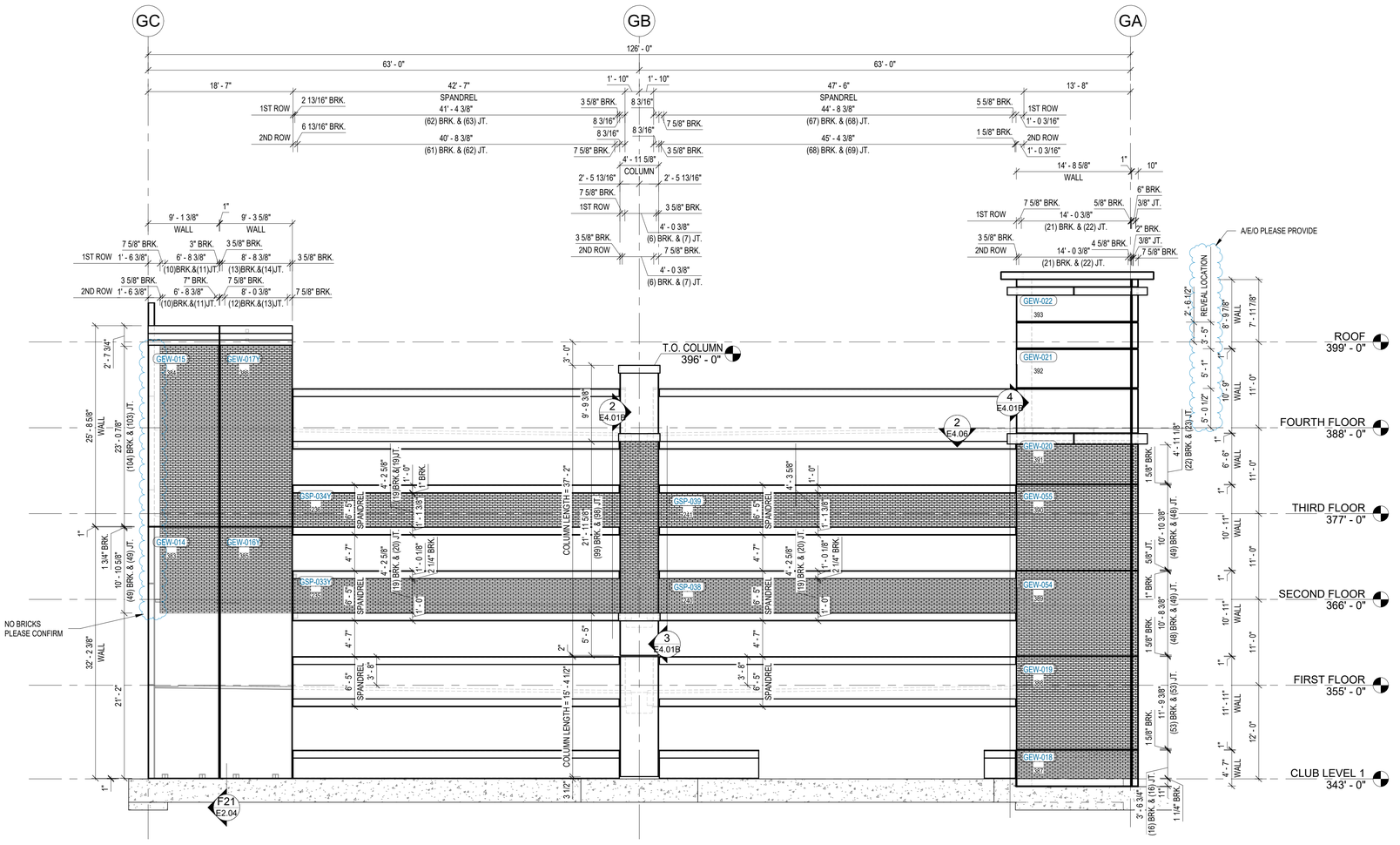
A	FOR APPROVAL	01/05/23

PROJECT:
GRANITE RUN PHASE II
MIDDLETOWN TOWNSHIP, PA
EAST EXTERIOR ELEVATION

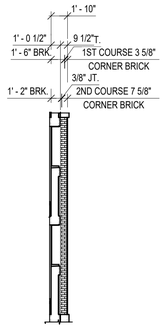
THE CONSULTING ENGINEERS GROUP Inc.
14352 Proton Drive - Suite 100 - San Antonio, TX 78233
ph 637-9377 FAX 210 637-1172 E-MAIL engineers@cegtx.com

JERSEY PRECAST
853 NOTTINGHAM WAY
HAMILTON TOWNSHIP, NJ 08638
PH: 609-689-3700 FAX: 609-689-3797

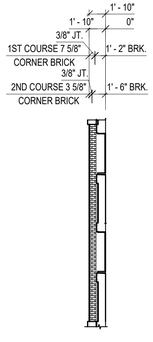
CEG JOB NO. 22551
JOB NO. 22040
SHEET NO. E4.01



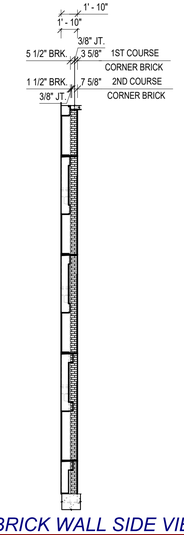
1 *EAST ELEVATION BRICK*
E4.01B SCALE: 1/8" = 1'-0"



2 *BRICK COLUMN SIDE VIEW-A*
E4.01B SCALE: 1/8" = 1'-0"



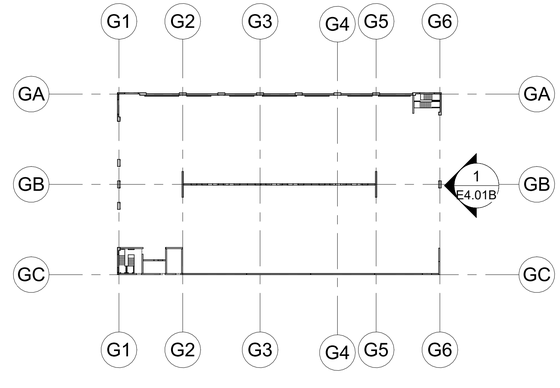
3 *BRICK COLUMN SIDE VIEW-B*
E4.01B SCALE: 1/8" = 1'-0"



4 *BRICK WALL SIDE VIEW*
E4.01B SCALE: 1/8" = 1'-0"

NOTE:

SEE CONNECTION FOR BRICK PANEL ON SHEET E4.01



COMMONWEALTH OF PENNSYLVANIA
REGISTERED PROFESSIONAL
CHRIS C. KERCSMAR
ENGINEER
PE062299

DRAWN BY: OAS
CHECKED BY:
DATE: 12/02/22

SUBMITTALS/REVISIONS:

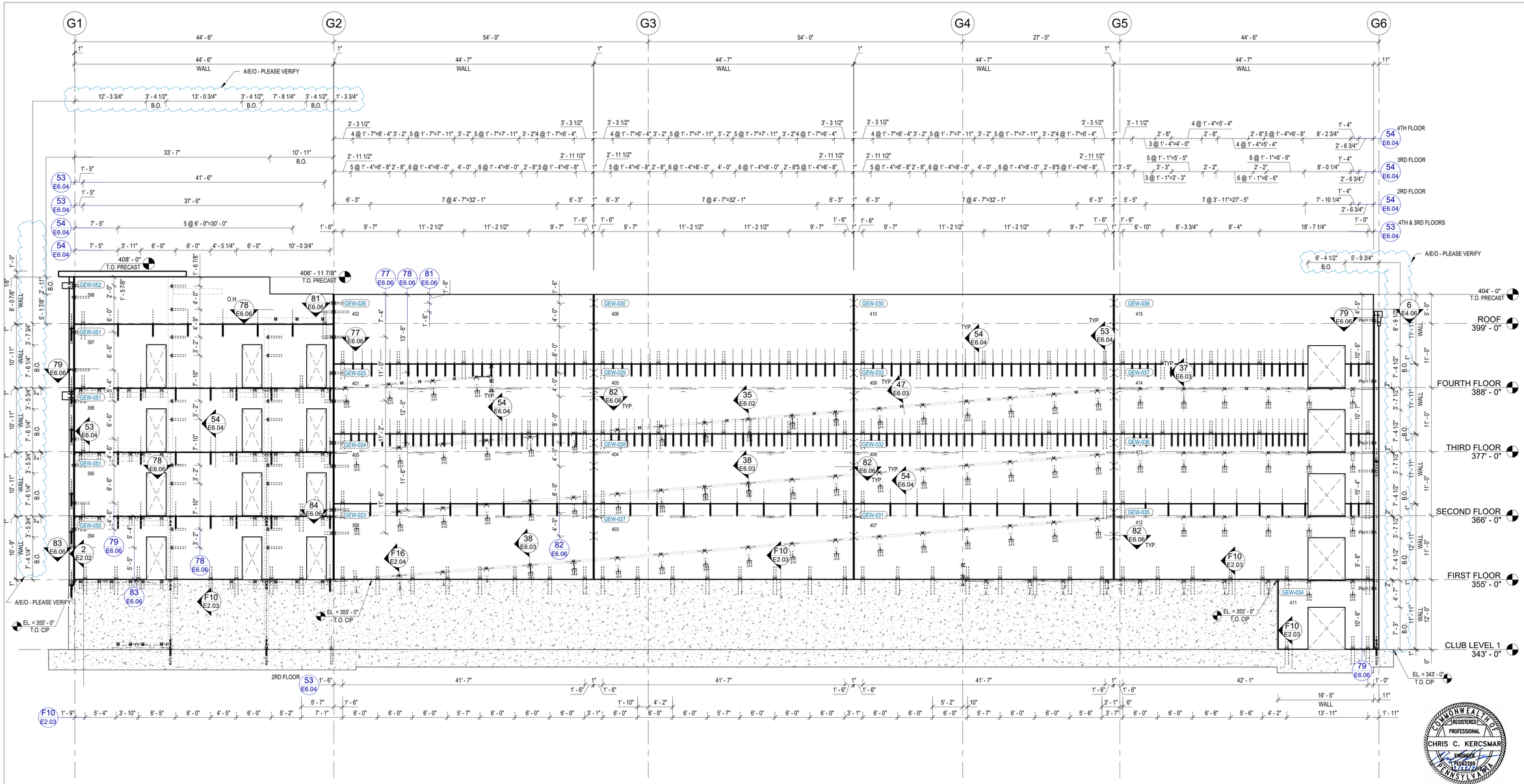
		01/05/23
A	FOR APPROVAL	

The CONSULTING ENGINEERS GROUP Inc.
14302 Pennsylvania Road - SUITE 105 - CRANBERRY TWP., PA 16066
PH 724-453-3377 FAX 724-453-1172 E-MAIL engineers@cegpa.com

PROJECT:
GRANITE RUN PHASE II
MIDDLETOWN TOWNSHIP, PA
EAST EXTERIOR ELEVATION-BRICK

JERSEY PRECAST
853 NOTTINGHAM WAY
HAMILTON TOWNSHIP, NJ 08638
PH: 609-689-3700 FAX: 609-689-3797

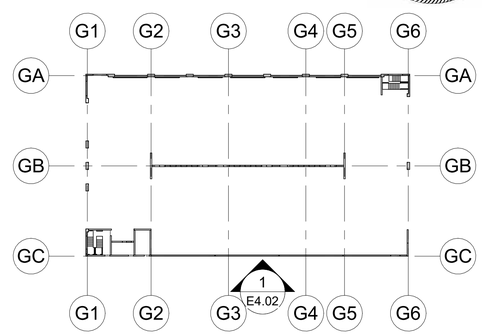
CEG JOB NO. 22551
JOB NO. 22040
SHEET NO. E4.01B



1 SOUTH ELEVATION
E4.02 SCALE: 1/8" = 1'-0"

NOTES:

= C.I.P. CONCRETE



KEY PLAN

DRAWN BY: OAS
CHECKED BY: ÖVV
DATE: 10/26/22

SUBMITTALS/REVISIONS:

A	FOR APPROVAL	01/05/23

The CONSULTING ENGINEERS GROUP Inc.
14352 Parkinshire Road - SUITE 100 - SAN ANTONIO, TX 78232
PH 830-537-5577 FAX 210-637-1172 E-MAIL engineers@cegtx.com

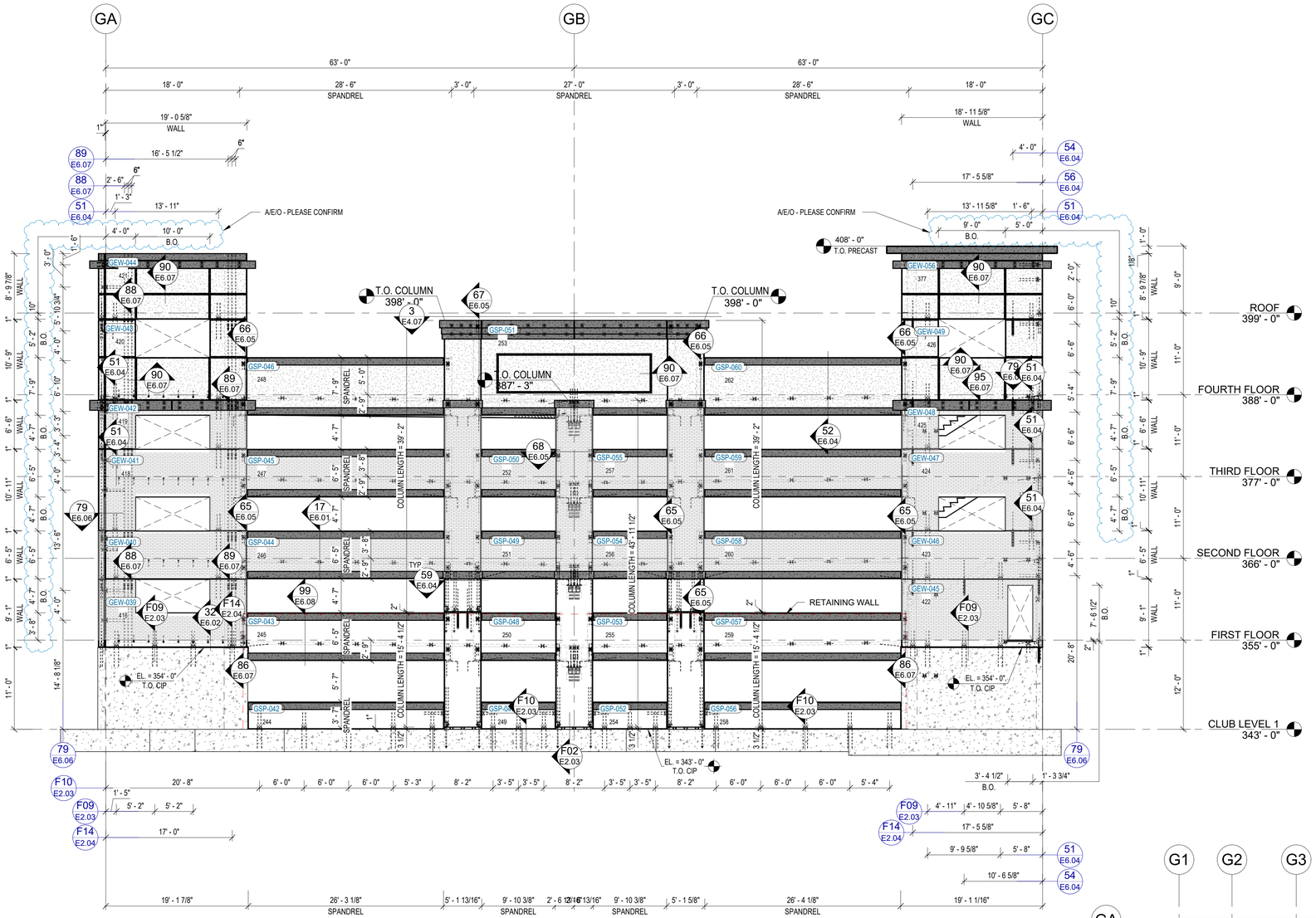
PROJECT:
GRANITE RUN PHASE II
MIDDLETOWN TOWNSHIP, PA
SOUTH EXTERIOR ELEVATION

COMMONWEALTH OF PENNSYLVANIA
REGISTERED PROFESSIONAL
CHRIS C. KERCSMAR
ENGINEER
PE062289

JERSEY PRECAST
853 NOTTINGHAM WAY
HAMILTON TOWNSHIP, NJ 08638
PH: 609-689-3700 FAX: 609-689-3797

CEG JOB NO. 22551
JOB NO. 22040
SHEET NO. E4.02

SEE E4.03B FOR BRICK LAYOUT AND REVEAL



1 WEST ELEVATION
E4.03 SCALE: 1/8" = 1'-0"

NOTES:

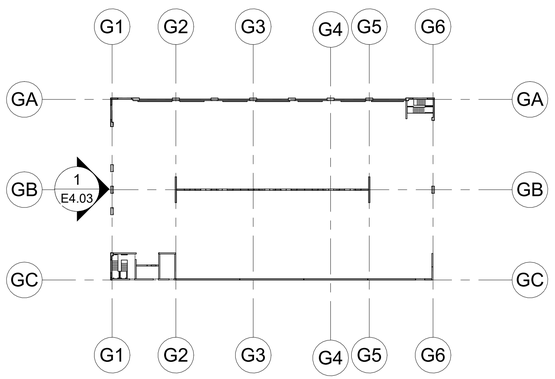
= STERLING GREY, SANDBLAST FINISH

= STAINED DARK GREY, SANDBLAST FINISH

= C.I.P. CONCRETE

= PRECAST PANEL WITH THIN BRICK, GREY CONCRETE

= GREY CONCRETE, FROM FINISH (EXCEPT FOR COLUMN WHICH WILL BE STERLING GREY)



KEY PLAN

COMMONWEALTH OF PENNSYLVANIA REGISTERED PROFESSIONAL ENGINEER CHRIS C. KERCSMAR PE042283

DRAWN BY: OAS
CHECKED BY:
DATE: 10/26/22

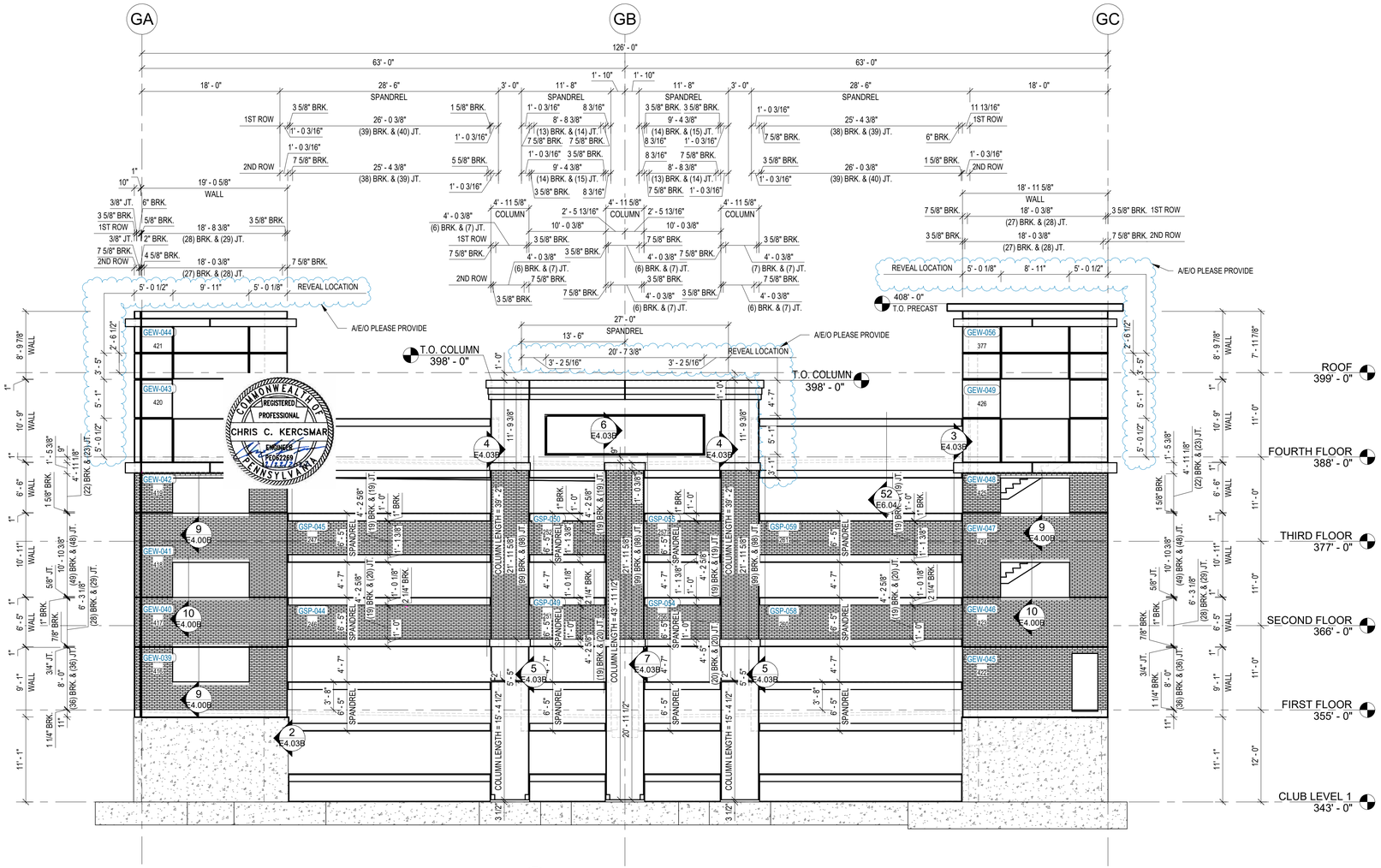
SUBMITTALS/REVISIONS:
A FOR APPROVAL 01/05/23

The CONSULTING ENGINEERS GROUP Inc.
14352 Parkinson Road - Suite 100 - SAN ANTONIO, TX 78232
PH 637-9377 FAX 210 637-1172 E-MAIL engineers@cegtx.com

PROJECT:
GRANITE RUN PHASE II
MIDDLETOWN TOWNSHIP, PA
WEST EXTERIOR ELEVATION

JERSEY PRECAST
853 NOTTINGHAM WAY
HAMILTON TOWNSHIP, NJ 08638
PH: 609-689-3700 FAX: 609-689-3797

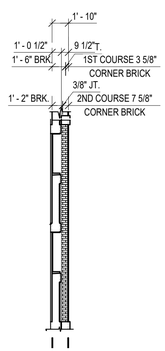
CEG JOB NO. 22551
JOB NO. 22040
SHEET NO. E4.03



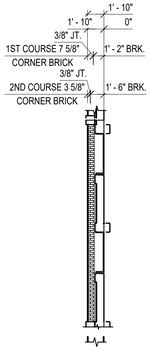
2 *BRICK WALL SIDE VIEW*
E4.03B SCALE: 1/8" = 1'-0"

1 *WEST ELEVATION BRICK*
E4.03B SCALE: 1/8" = 1'-0"

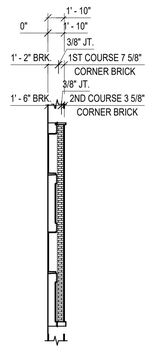
3 *BRICK WALL SIDE VIEW*
E4.03B SCALE: 1/8" = 1'-0"



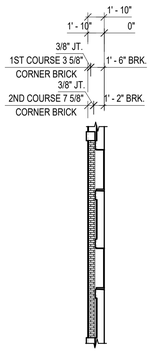
4 *BRICK COLUMN SIDE VIEW-A*
E4.03B SCALE: 1/8" = 1'-0"



5 *BRICK COLUMN SIDE VIEW-B*
E4.03B SCALE: 1/8" = 1'-0"



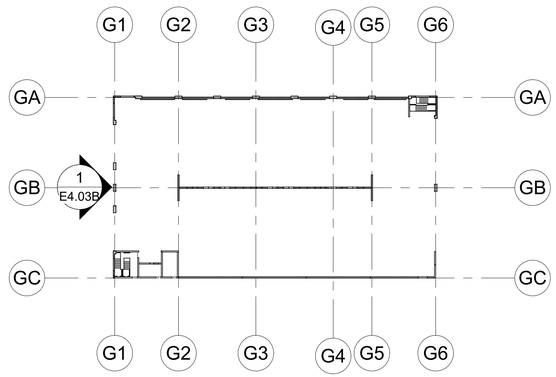
6 *BRICK COLUMN SIDE VIEW-C*
E4.03B SCALE: 1/8" = 1'-0"



7 *BRICK COLUMN SIDE VIEW-D*
E4.03B SCALE: 1/8" = 1'-0"

NOTE:

SEE CONNECTION FOR BRICK PANEL ON SHEET E4.03



DRAWN BY: OAS
CHECKED BY:
DATE: 12/02/22

SUBMITTALS/REVISIONS:

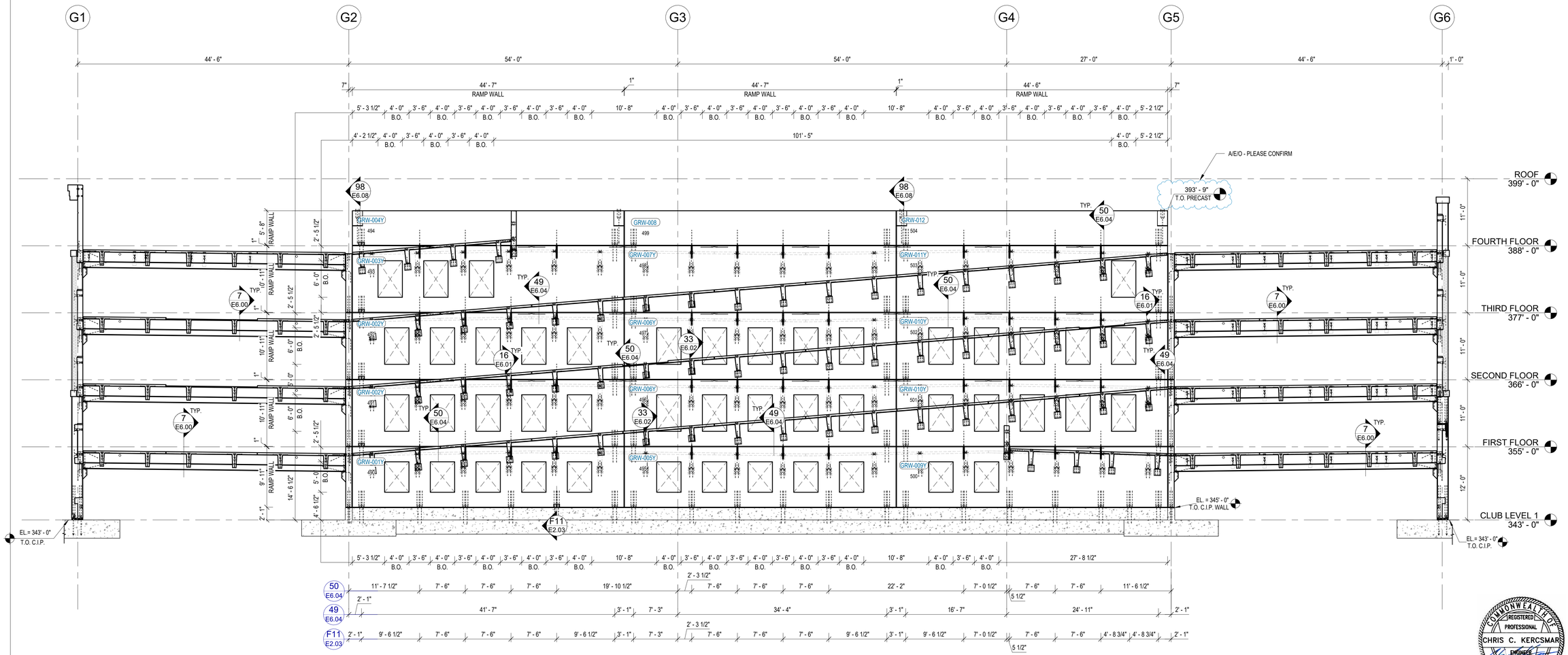
A	FOR APPROVAL	01/05/23

The CONSULTING ENGINEERS GROUP Inc.
1400 Penbrooke Road - Suite 100 - Glen Mills, PA 19342
PH 610-558-9777 FAX (215) 630-1172 E-MAIL engineers@cegpa.com

PROJECT:
GRANITE RUN PHASE II
MIDDLETOWN TOWNSHIP, PA
WEST EXTERIOR ELEVATION-BRICK

JERSEY PRECAST
853 NOTTINGHAM WAY
HAMILTON TOWNSHIP, NJ 08638
PH: 609-689-3700 FAX: 609-689-3797

CEG JOB NO. 22551
JOB NO. 22040
SHEET NO. E4.03B

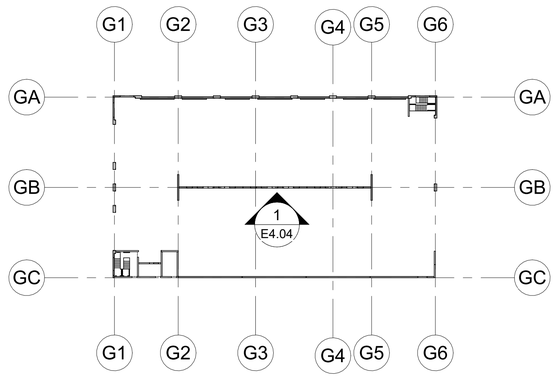


1 INTERIOR RAMP WALL ELEVATION

E4.04 SCALE: 1/8" = 1'-0"

NOTES:

= C.I.P. CONCRETE



KEY PLAN

DRAWN BY: OAS
CHECKED BY:
DATE: 10/26/22

SUBMITTALS/REVISIONS:

		01/05/23
A	FOR APPROVAL	

The CONSULTING ENGINEERS GROUP Inc.
14352 Photinia Road - Suite 100 - San Antonio, TX 78233
PH 637-0377 FAX 210 637-1172 E-MAIL engineers@cegtex.com

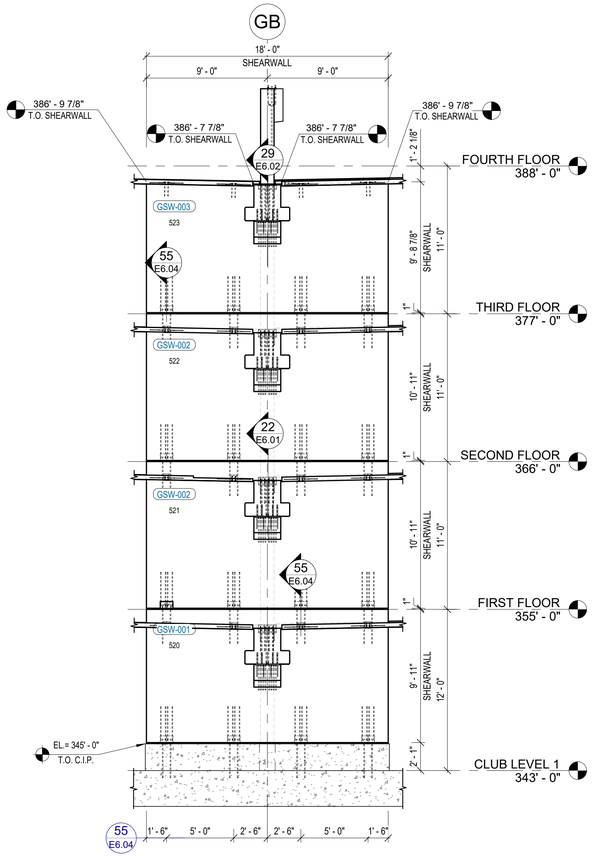
PROJECT:

GRANITE RUN PHASE II
MIDDLETOWN TOWNSHIP, PA
INTERIOR RAMP WALL ELEVATION

COMMONWEALTH OF PENNSYLVANIA
REGISTERED PROFESSIONAL
CHRIS C. KERCSMAR
ENGINEER
PE062289
12/5/22

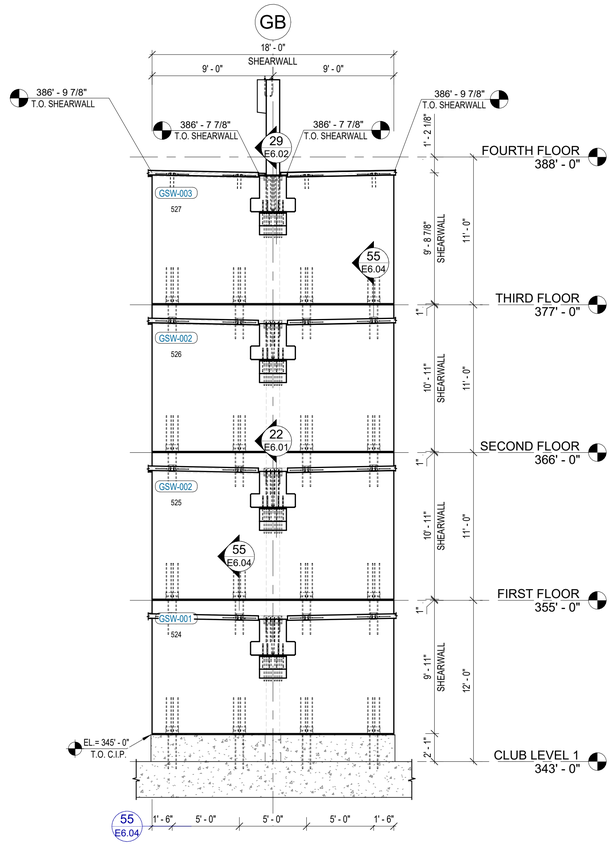
JERSEY PRECAST
853 NOTTINGHAM WAY
HAMILTON TOWNSHIP, NJ 08638
PH: 609-689-3700 FAX: 609-689-3797

CEG JOB NO. 22551
JOB NO. 22040
SHEET NO. E4.04



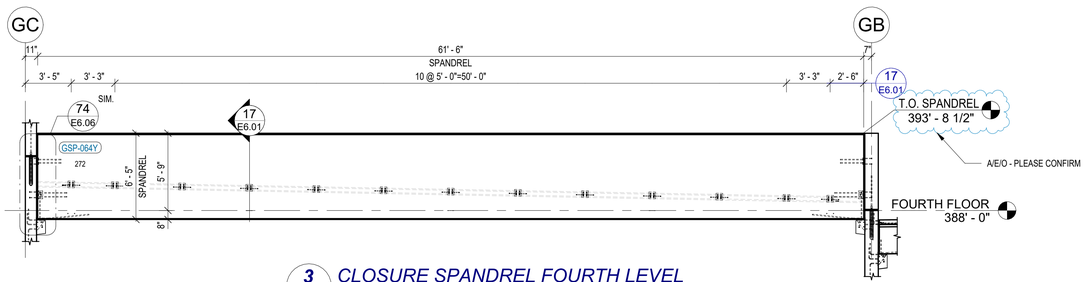
1 WEST INTERIOR SHEAR WALL ELEVATION

E4.05 SCALE: 3/16" = 1'-0"



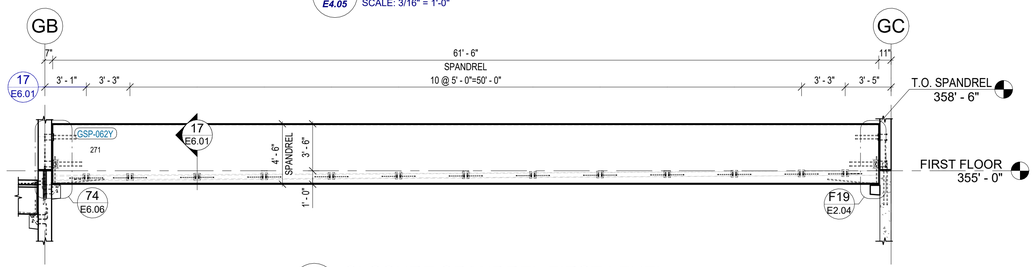
2 EAST INTERIOR SHEAR WALL ELEVATION

E4.05 SCALE: 3/16" = 1'-0"



3 CLOSURE SPANDREL FOURTH LEVEL

E4.05 SCALE: 3/16" = 1'-0"

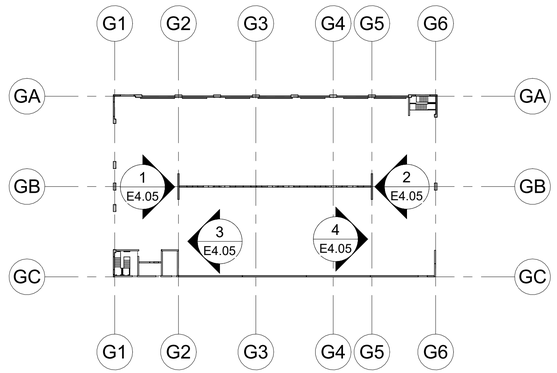


4 CLOSURE SPANDREL FIRST LEVEL

E4.05 SCALE: 3/16" = 1'-0"

NOTES:

= C.I.P. CONCRETE



KEY PLAN

COMMONWEALTH OF PENNSYLVANIA
REGISTERED PROFESSIONAL
CHRIS C. KERCSMAR
ENGINEER
PE042269

DRAWN BY: OAS
CHECKED BY:
DATE: 10/26/22

SUBMITTALS/REVISIONS:

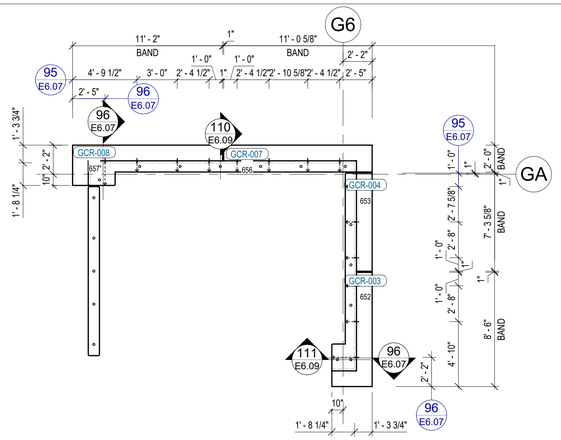
		01/05/23
A	FOR APPROVAL	

THE CONSULTING ENGINEERS GROUP Inc.
14302 Pecksenville Road - SUITE 105 - SAN ANTONIO, TX 78233
PH 830-537-5577 FAX 210-637-1172 E-MAIL engineers@cegtx.com

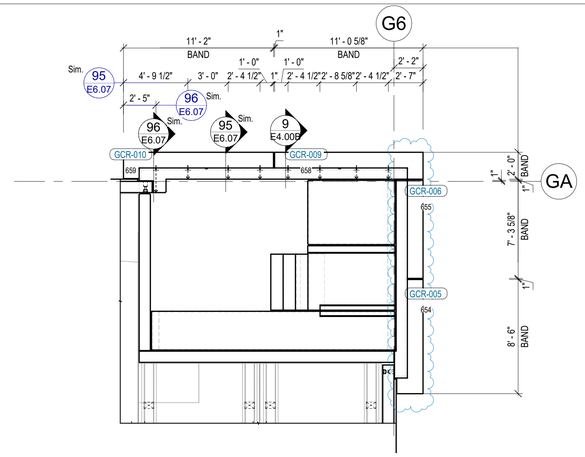
PROJECT:
GRANITE RUN PHASE II
MIDDLETOWN TOWNSHIP, PA
INTERIOR SHEAR WALL ELEVATIONS & CLOSURE SPANDRELS

JERSEY PRECAST
853 NOTTINGHAM WAY
HAMILTON TOWNSHIP, NJ 08638
PH: 609-689-3700 FAX: 609-689-3797

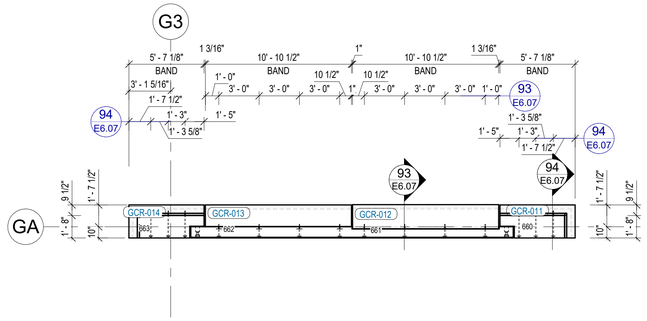
CEG JOB NO. 22551
JOB NO. 22040
SHEET NO. E4.05



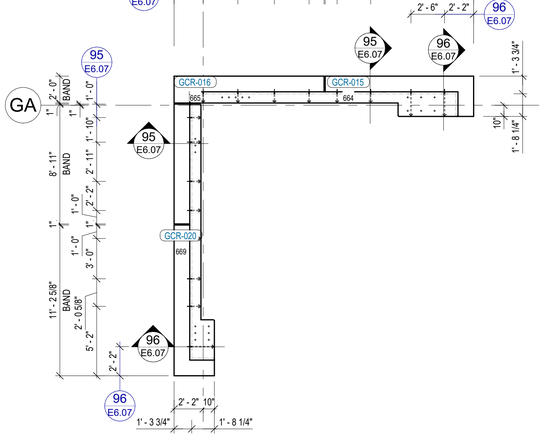
1 BEND PLAN 1
E4.06 SCALE: 3/16" = 1'-0"



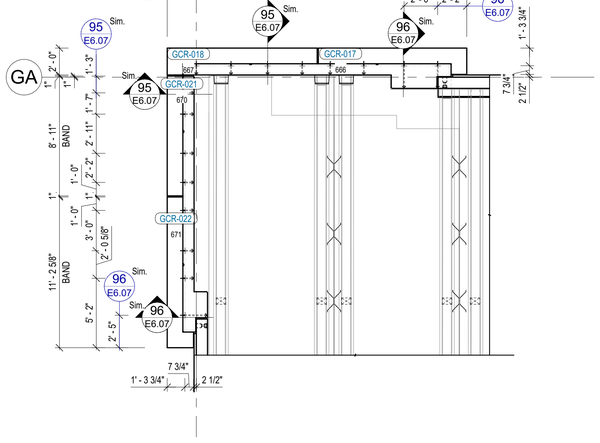
2 BEND PLAN 2
E4.06 SCALE: 3/16" = 1'-0"



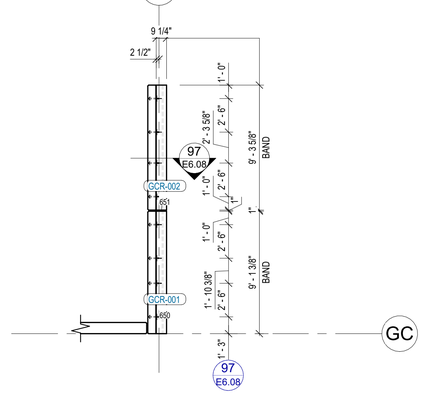
3 BAND PLAN 3
E4.06 SCALE: 3/16" = 1'-0"



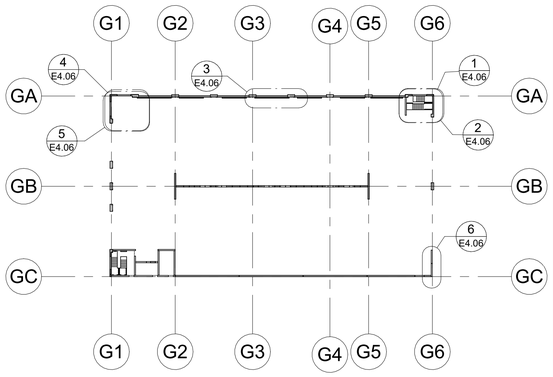
4 BEND PLAN 4
E4.06 SCALE: 3/16" = 1'-0"



5 BEND PLAN 5
E4.06 SCALE: 3/16" = 1'-0"



6 BEND PLAN 6
E4.06 SCALE: 3/16" = 1'-0"



KEY PLAN

COMMONWEALTH OF PENNSYLVANIA
REGISTERED PROFESSIONAL
CHRIS C. KERCSMAR
ENGINEER
PE062289

DRAWN BY: OAS
CHECKED BY:
DATE: 12/21/22

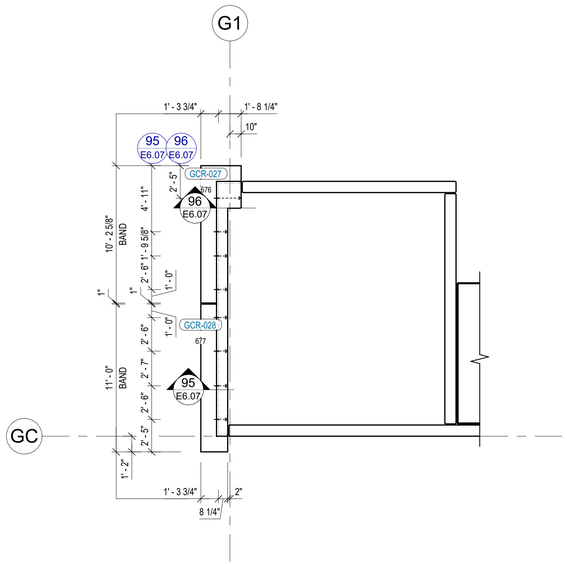
SUBMITTALS/REVISIONS:
01/05/23
A FOR APPROVAL

The CONSULTING ENGINEERS GROUP Inc.
14302 Pennsylvania Road - SUITE 105 - OAK ARTHUR, TX 78133
PH 637-3377 FAX 278 637-1172 E-MAIL engineers@cegtx.com

PROJECT:
GRANITE RUN PHASE II
MIDDLETOWN TOWNSHIP, PA.
BANDS PLAN 1

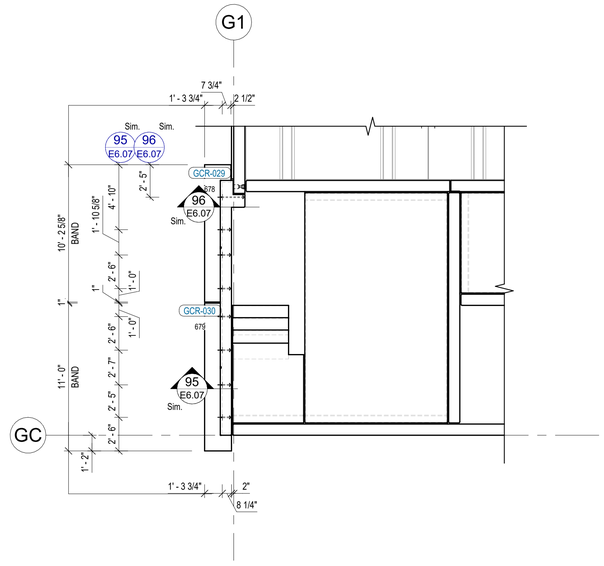
JERSEY PRECAST
853 NOTTINGHAM WAY
HAMILTON TOWNSHIP, NJ 08638
PH: 609-689-3700 FAX: 609-689-3797

CEG JOB NO. 22551
JOB NO. 22040
SHEET NO. E4.06



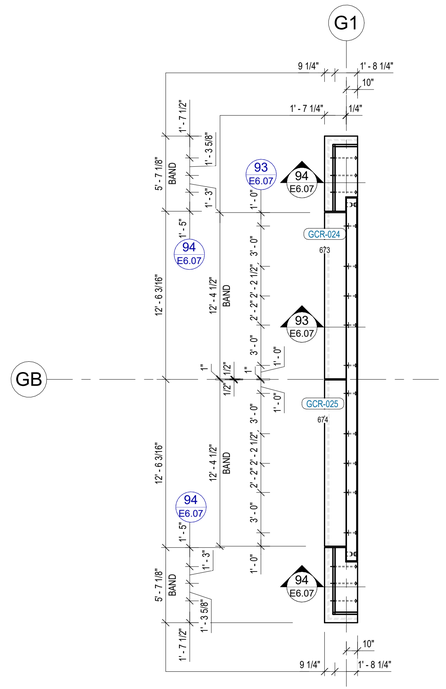
1 CORNISE PLAN 7

E4.07 SCALE: 3/16" = 1'-0"



2 CORNISE PLAN 8

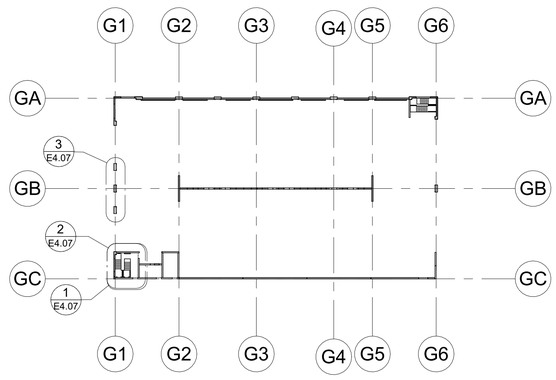
E4.07 SCALE: 3/16" = 1'-0"



3 CORNISE PLAN 9

E4.07 SCALE: 3/16" = 1'-0"

COMMONWEALTH OF PENNSYLVANIA
REGISTERED PROFESSIONAL
CHRIS C. KERCSMAR
ENGINEER
PE062269



KEY PLAN

DRAWN BY: OPK
CHECKED BY:
DATE: 12/21/22

SUBMITTALS/REVISIONS:

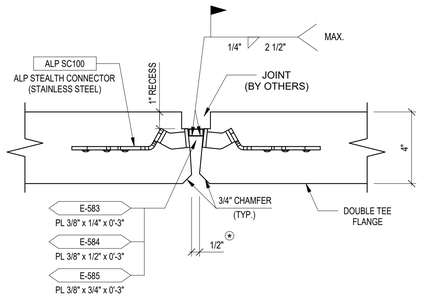
		01/05/23
A	FOR APPROVAL	

The CONSULTING ENGINEERS GROUP Inc.
14352 Photinia Road - Suite 100 - San Antonio, TX 78233
ph 637-0377 fax 210 637-1172 E-MAIL engineers@cegtex.com

PROJECT:
GRANITE RUN PHASE II
MIDDLETOWN TOWNSHIP, PA
BANDS PLAN 2

JERSEY PRECAST
853 NOTTINGHAM WAY
HAMILTON TOWNSHIP, NJ 08638
PH: 609-689-3700 FAX: 609-689-3797

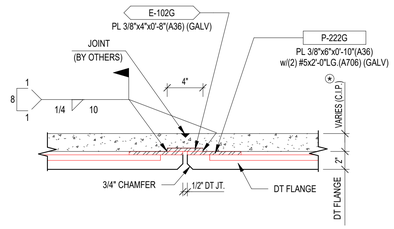
CEG JOB NO. 22551
JOB NO. 22040
SHEET NO. E4.07



NOTES:

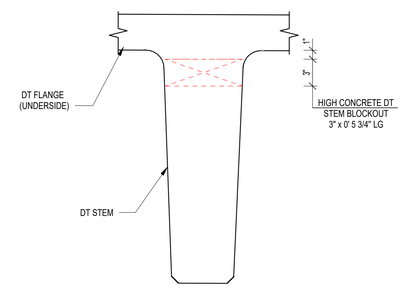
1. TOP OF DOUBLE TEE FLANGES WILL HAVE DIFFERENT ELEVATIONS DUE TO VARIABLE CAMBER IN DOUBLE TEES.
2. THE ERECTOR SHALL POSITION DOUBLE TEES TO ALIGN FLANGES TO A MAXIMUS TOP SURFACE DIFFERENTIAL OF 1/4".
3. JOINT TREATMENT BETWEEN DOUBLE TEES TO BE BY OTHERS.
4. CONTRACTOR REFER TO STRUCTURAL DRAWINGS FOR CONTROL JTS. AND OTHER ITEMS IN TOPPING.

1

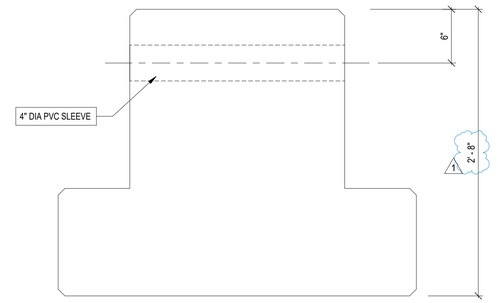


Ⓒ SEE STRUCTURAL DRAWINGS FOR C.I.P. INFO, INCLUDING REINFORCEMENT STEEL (BY OTHERS)

2



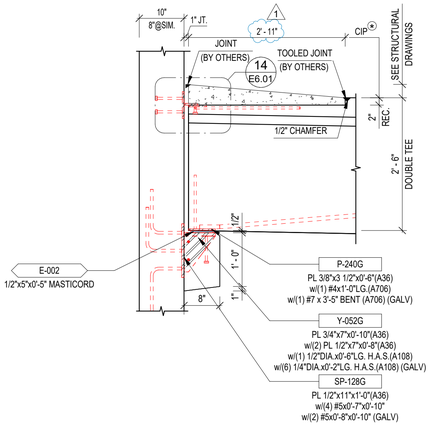
3



TYPICAL IT-BEAM

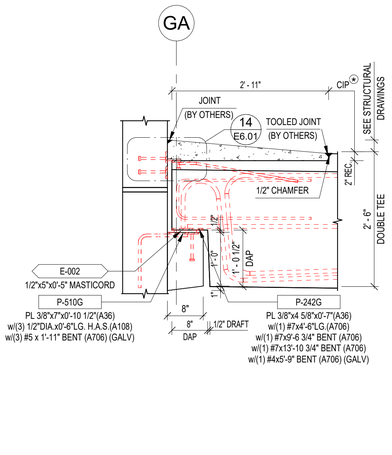
4

5



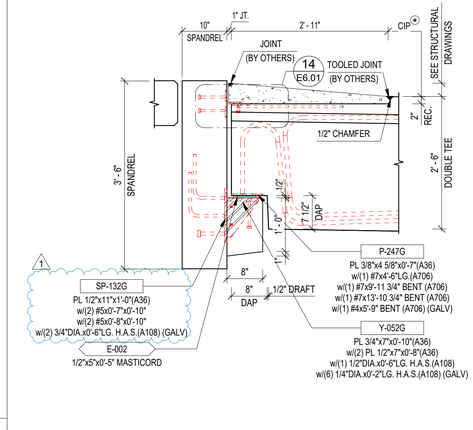
Ⓒ SEE STRUCTURAL DRAWINGS FOR C.I.P. INFO, INCLUDING REINFORCEMENT STEEL (BY OTHERS)

9



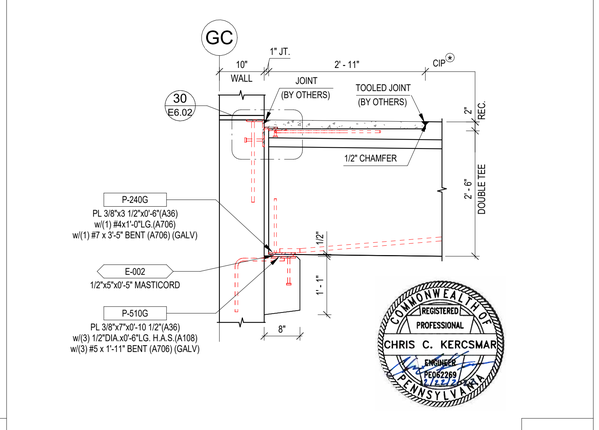
Ⓒ SEE STRUCTURAL DRAWINGS FOR C.I.P. INFO, INCLUDING REINFORCEMENT STEEL (BY OTHERS)

10



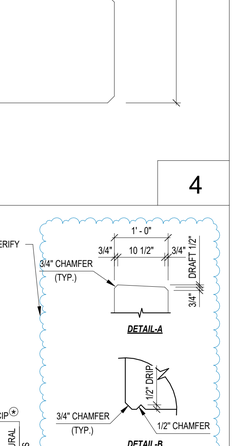
Ⓒ SEE STRUCTURAL DRAWINGS FOR C.I.P. INFO, INCLUDING REINFORCEMENT STEEL (BY OTHERS)

11



Ⓒ SEE STRUCTURAL DRAWINGS FOR C.I.P. INFO, INCLUDING REINFORCEMENT STEEL (BY OTHERS)

12



Ⓒ SEE STRUCTURAL DRAWINGS FOR C.I.P. INFO, INCLUDING REINFORCEMENT STEEL (BY OTHERS)

8

DRAWN BY: OVB
CHECKED BY:
DATE: 10/21/22

SUBMITTALS/REVISIONS:

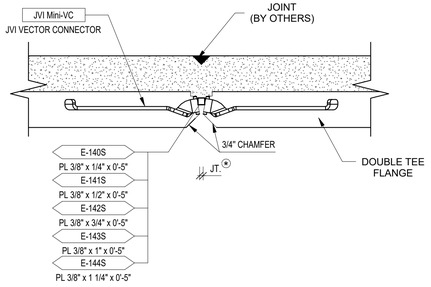
A	FOR REFERENCE	12/15/22
1	REVISION FOR RECORD 1	12/27/22

THE CONSULTING ENGINEERS GROUP, Inc.
14302 Pecanland Road - SUITE 105 - SAN ANTONIO, TX 78233
PH 830-537-3977 FAX 210-637-1172 E-MAIL engineers@cegtx.com

PROJECT:
GRANITE RUN PHASE II
MIDDLETOWN TOWNSHIP, PA
SECTIONS AND DETAILS (1-12)

JERSEY PRECAST
853 NOTTINGHAM WAY
HAMILTON TOWNSHIP, NJ 08638
PH: 609-689-3700 FAX: 609-689-3797

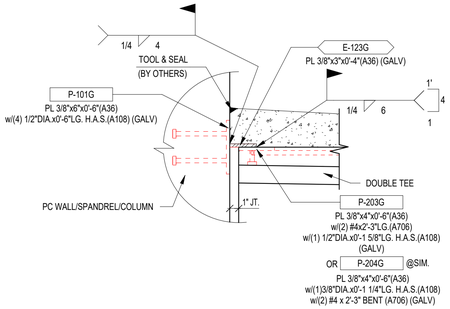
CEG JOB NO. 22551
JOB NO. 22040
SHEET NO. E6.00



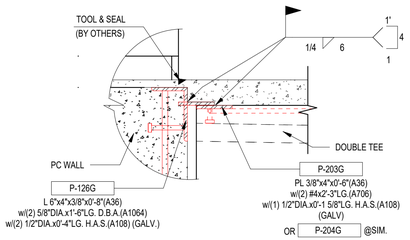
NOTES:

1. TOP OF DOUBLE TEE FLANGES WILL HAVE DIFFERENT ELEVATIONS DUE TO VARIABLE CAMBER IN DOUBLE TEES.
2. THE ERECTOR SHALL POSITION DOUBLE TEES TO ALIGN FLANGES TO A MAXIMUS TOP SURFACE DIFFERENTIAL OF 1/4".
3. JOINT TREATMENT BETWEEN DOUBLE TEES TO BE BY OTHERS.
4. CONTRACTOR REFER TO STRUCTURAL DRAWINGS FOR CONTROL JTS. AND OTHER ITEMS IN TOPPING.
5. ⊕ERECTOR TO ADJUST JOINT WIDTH ALONG THE RAMP SUCH THAT CONSISTENT WIDTHS ARE PROVIDED.

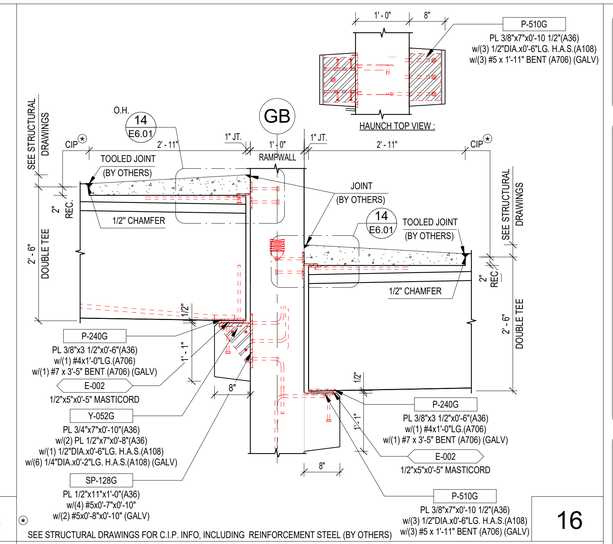
13



14



15



SEE STRUCTURAL DRAWINGS FOR C.I.P. INFO, INCLUDING REINFORCEMENT STEEL (BY OTHERS)

16

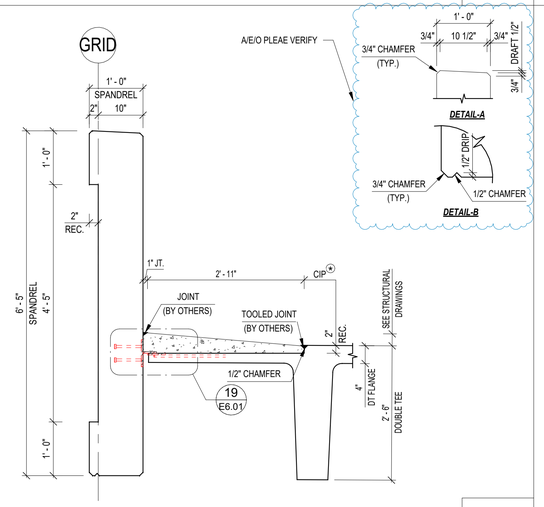
DRAWN BY:	CHECKED BY:	DATE:
OVB		10/21/22

SUBMITTALS/REVISIONS:

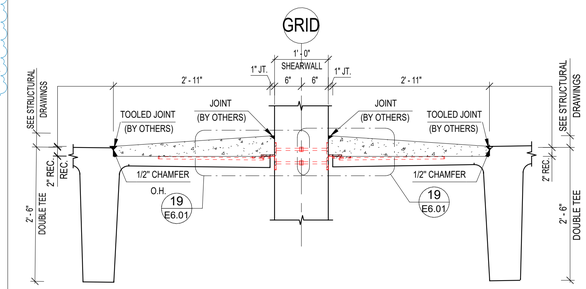
	12/15/22	
	12/27/22	
A	FOR REFERENCE	
1	REVISION FOR RECORD 1	

THE CONSULTING ENGINEERS GROUP, Inc.
14002 Parkside Drive - Suite 105 - San Antonio, TX 78232
ph 830-837-9977 fax 210-637-1172 E-mail: engineers@cegtx.com

PROJECT:
GRANITE RUN PHASE II
MIDDLETOWN TOWNSHIP, PA
SECTIONS AND DETAILS (13-24)

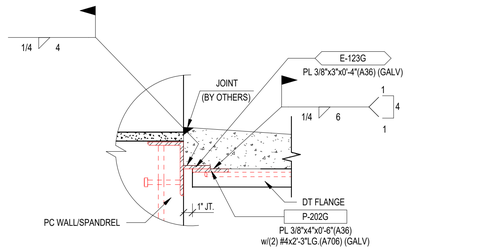


17

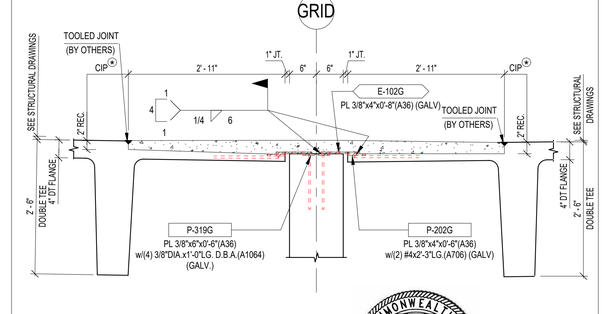


SEE STRUCTURAL DRAWINGS FOR C.I.P. INFO, INCLUDING REINFORCEMENT STEEL (BY OTHERS)

18



19



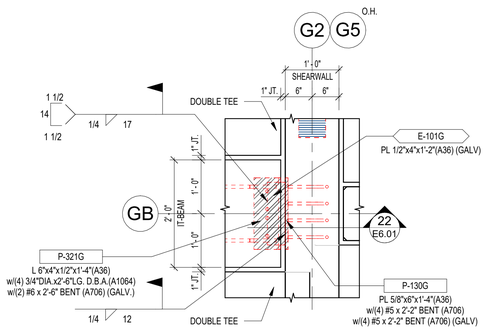


SEE STRUCTURAL DRAWINGS FOR C.I.P. INFO, INCLUDING REINFORCEMENT STEEL (BY OTHERS)

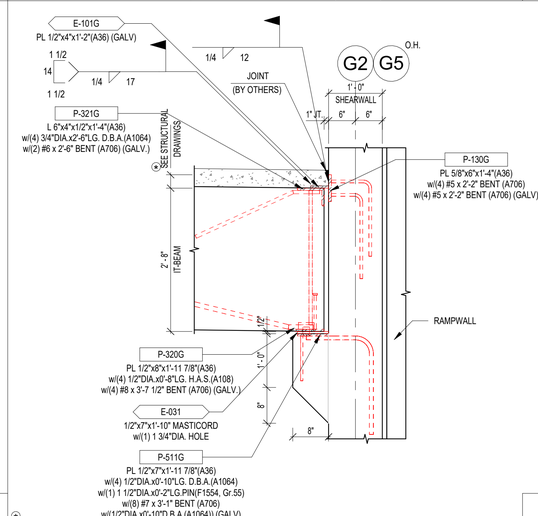
20

JERSEY PRECAST
853 NOTTINGHAM WAY
HAMILTON TOWNSHIP, NJ 08638
PH: 609-689-3700 FAX: 609-689-3797

CEG JOB NO. 22551
JOB NO. 22040
SHEET NO. E6.01

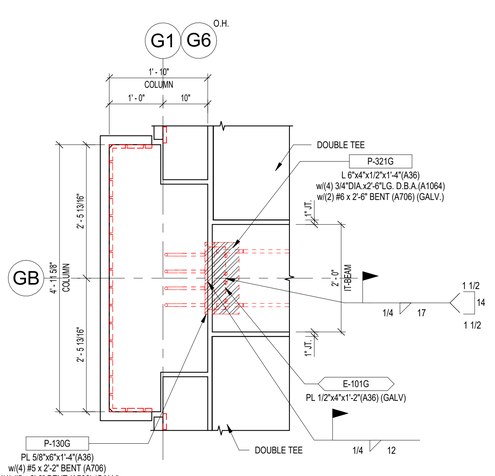


21

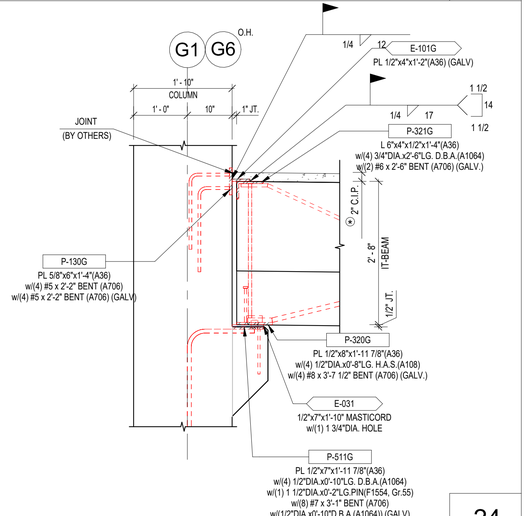


SEE STRUCTURAL DRAWINGS FOR C.I.P. INFO, INCLUDING REINFORCEMENT STEEL (BY OTHERS)

22

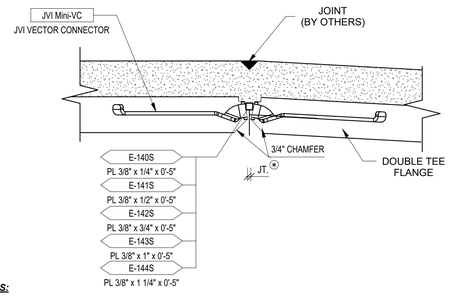


23



SEE STRUCTURAL DRAWINGS FOR C.I.P. INFO, INCLUDING REINFORCEMENT STEEL (BY OTHERS)

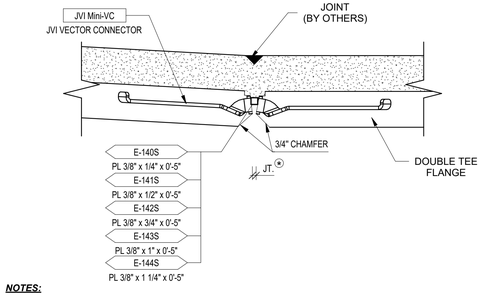
24



NOTES:

1. TOP OF DOUBLE TEE FLANGES WILL HAVE DIFFERENT ELEVATIONS DUE TO VARIABLE CAMBER IN DOUBLE TEES.
2. THE ERECTOR SHALL POSITION DOUBLE TEES TO ALIGN FLANGES TO A MAXIMUS TOP SURFACE DIFFERENTIAL OF 1/4".
3. JOINT TREATMENT BETWEEN DOUBLE TEES TO BE BY OTHERS.
4. CONTRACTOR REFER TO STRUCTURAL DRAWINGS FOR CONTROL JTS. AND OTHER ITEMS IN TOPPING.
5. ⊙ERECTOR TO ADJUST JOINT WIDTH ALONG THE RAMP SUCH THAT CONSISTENT WIDTHS ARE PROVIDED.

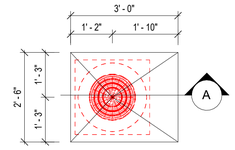
25



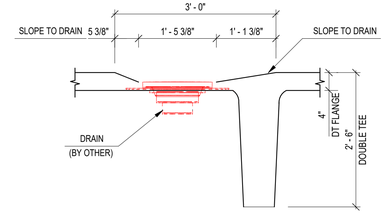
NOTES:

1. TOP OF DOUBLE TEE FLANGES WILL HAVE DIFFERENT ELEVATIONS DUE TO VARIABLE CAMBER IN DOUBLE TEES.
2. THE ERECTOR SHALL POSITION DOUBLE TEES TO ALIGN FLANGES TO A MAXIMUS TOP SURFACE DIFFERENTIAL OF 1/4".
3. JOINT TREATMENT BETWEEN DOUBLE TEES TO BE BY OTHERS.
4. CONTRACTOR REFER TO STRUCTURAL DRAWINGS FOR CONTROL JTS. AND OTHER ITEMS IN TOPPING.
5. ⊙ERECTOR TO ADJUST JOINT WIDTH ALONG THE RAMP SUCH THAT CONSISTENT WIDTHS ARE PROVIDED.

26

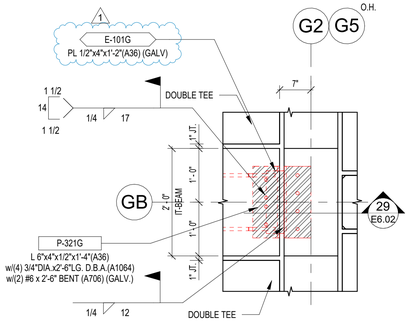


PLAN

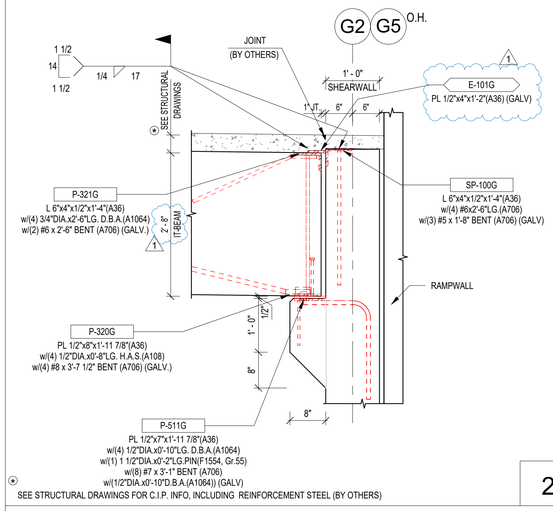


SECTION-A

27

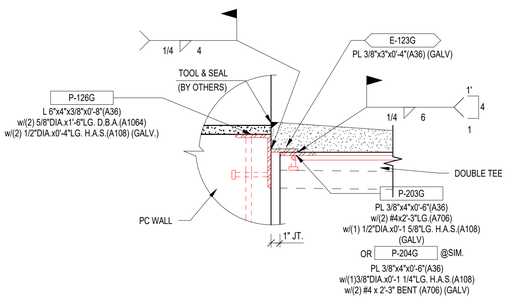


28

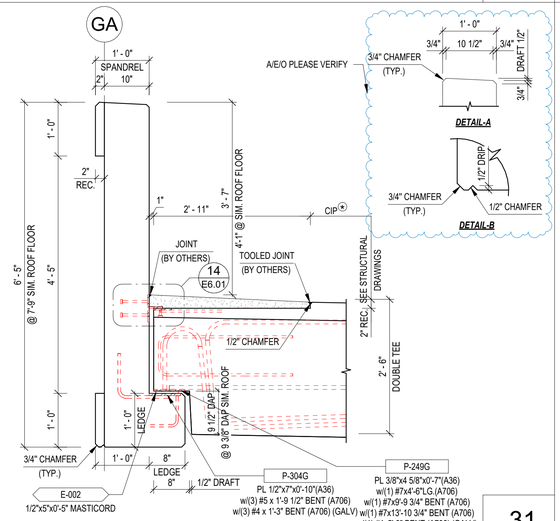


⊙SEE STRUCTURAL DRAWINGS FOR C.I.P. INFO, INCLUDING REINFORCEMENT STEEL (BY OTHERS)

29

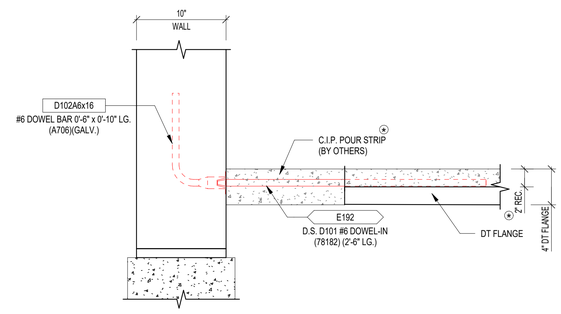


30



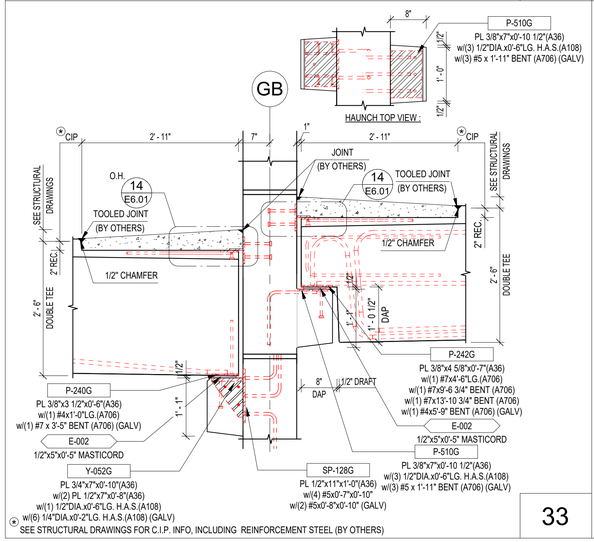
⊙SEE STRUCTURAL DRAWINGS FOR C.I.P. INFO, INCLUDING REINFORCEMENT STEEL (BY OTHERS)

31



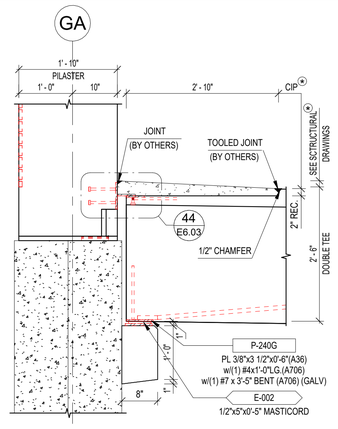
⊙SEE STRUCTURAL DRAWINGS FOR C.I.P. INFO, INCLUDING REINFORCEMENT STEEL (BY OTHERS)

32



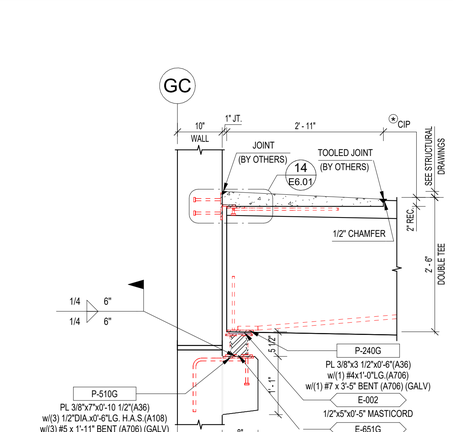
⊙SEE STRUCTURAL DRAWINGS FOR C.I.P. INFO, INCLUDING REINFORCEMENT STEEL (BY OTHERS)

33



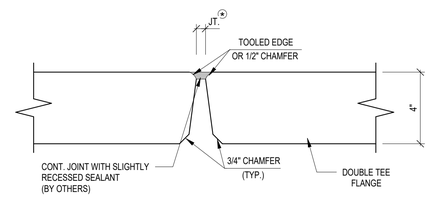
⊙SEE STRUCTURAL DRAWINGS FOR C.I.P. INFO, INCLUDING REINFORCEMENT STEEL (BY OTHERS)

34



⊙SEE STRUCTURAL DRAWINGS FOR C.I.P. INFO, INCLUDING REINFORCEMENT STEEL (BY OTHERS)

35



NOTES:

1. JOINT TREATMENT BETWEEN DOUBLE TEES TO BE BY OTHERS.
2. CONTRACTOR REFER TO STRUCTURAL DRAWINGS FOR CONTROL JTS. AND OTHER ITEMS IN TOPPING.
3. ERECTOR TO ADJUST JOINT WIDTH ALONG THE RAMP SUCH THAT CONSISTENT WIDTHS ARE PROVIDED.

36

DRAWN BY: OVB
CHECKED BY:
DATE: 10/21/22

SUBMITTALS/REVISIONS:

A	FOR REFERENCE	12/15/22
1	REVISION FOR RECORD 1	12/27/22

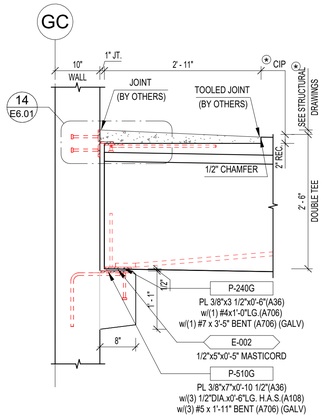
THE CONSULTING ENGINEERS GROUP, Inc.
14502 Thunderbird Road · SUITE 100 · SAN ANTONIO, TX 78233
PH 830-598-7377 FAX 210-637-1172 E-MAIL engineers@cegtex.com

PROJECT:
GRANITE RUN PHASE II
MIDDLETOWN TOWNSHIP, PA
SECTIONS AND DETAILS (25-36)

JERSEY PRECAST
853 NOTTINGHAM WAY
HAMILTON TOWNSHIP, NJ 08638
PH: 609-689-3700 FAX: 609-689-3797

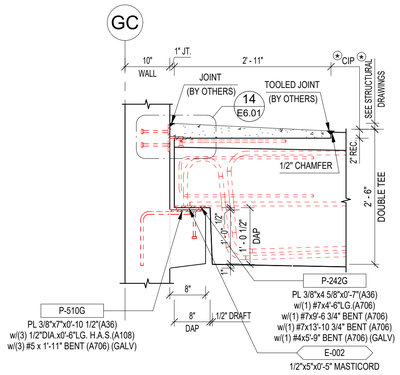
COMMONWEALTH OF PENNSYLVANIA
REGISTERED PROFESSIONAL
CHRIS C. KERCSMAR
ENGINEER
PE082269

CEG JOB NO. 22551
JOB NO. 22040
SHEET NO. E6.02



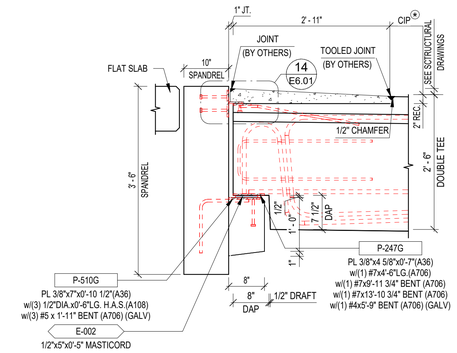
SEE STRUCTURAL DRAWINGS FOR C.I.P. INFO, INCLUDING REINFORCEMENT STEEL (BY OTHERS)

37



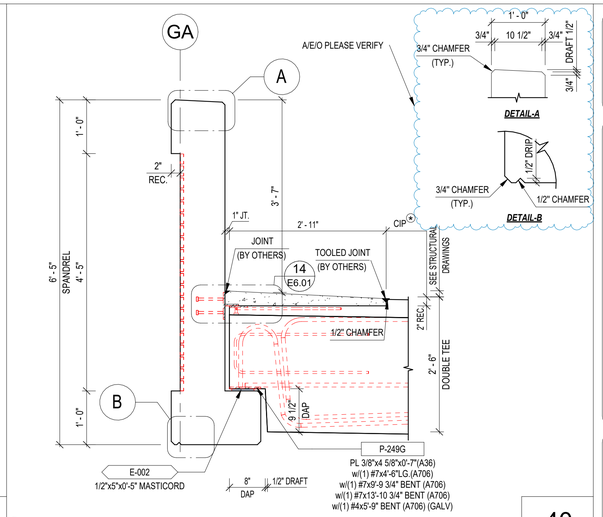
SEE STRUCTURAL DRAWINGS FOR C.I.P. INFO, INCLUDING REINFORCEMENT STEEL (BY OTHERS)

38



SEE STRUCTURAL DRAWINGS FOR C.I.P. INFO, INCLUDING REINFORCEMENT STEEL (BY OTHERS)

39

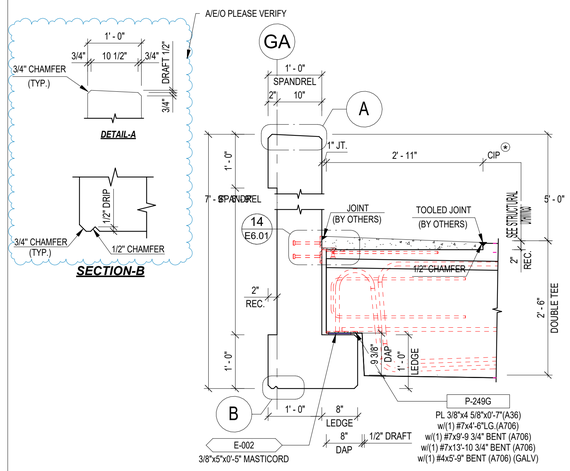


SEE STRUCTURAL DRAWINGS FOR C.I.P. INFO, INCLUDING REINFORCEMENT STEEL (BY OTHERS)

40

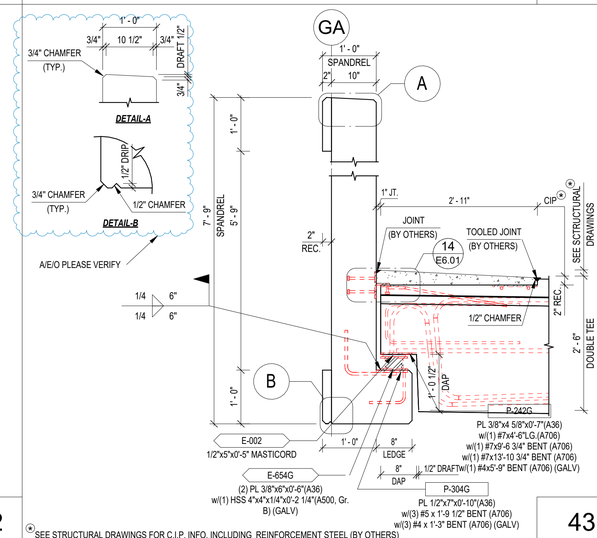
SEE STRUCTURAL DRAWINGS FOR C.I.P. INFO, INCLUDING REINFORCEMENT STEEL (BY OTHERS)

41



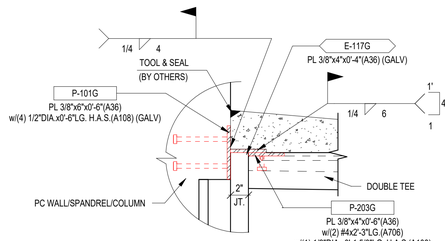
SEE STRUCTURAL DRAWINGS FOR C.I.P. INFO, INCLUDING REINFORCEMENT STEEL (BY OTHERS)

42

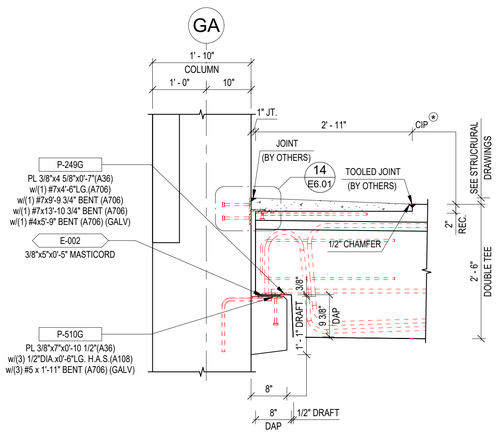


SEE STRUCTURAL DRAWINGS FOR C.I.P. INFO, INCLUDING REINFORCEMENT STEEL (BY OTHERS)

43

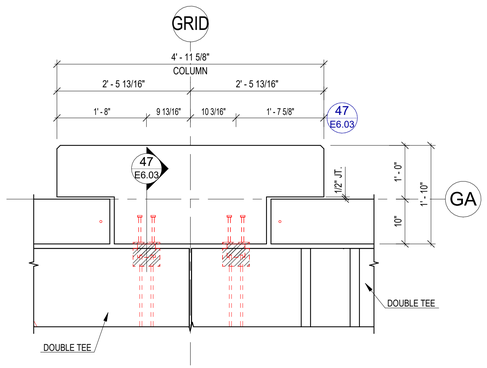


44

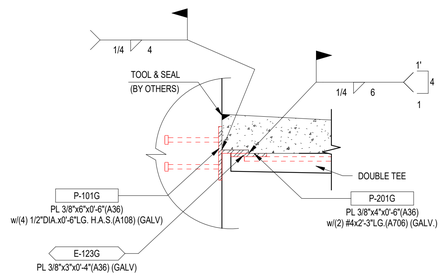


SEE STRUCTURAL DRAWINGS FOR C.I.P. INFO, INCLUDING REINFORCEMENT STEEL (BY OTHERS)

45



46



47



SUBMITTALS/REVISIONS:

A	FOR REFERENCE	12/15/22
1	REVISION FOR RECORD 1	12/27/22

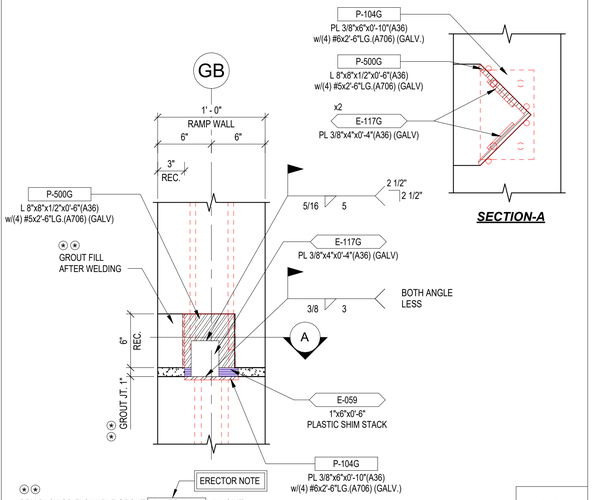
DRAWN BY: OVB
CHECKED BY:
DATE: 10/27/22

THE CONSULTING ENGINEERS GROUP INC.
14002 Preston Hollow Road - SUITE 100 - SAN ANTONIO, TX 78233
PH 830-537-3977 FAX (210) 637-1172 E-MAIL engineers@cegtx.com

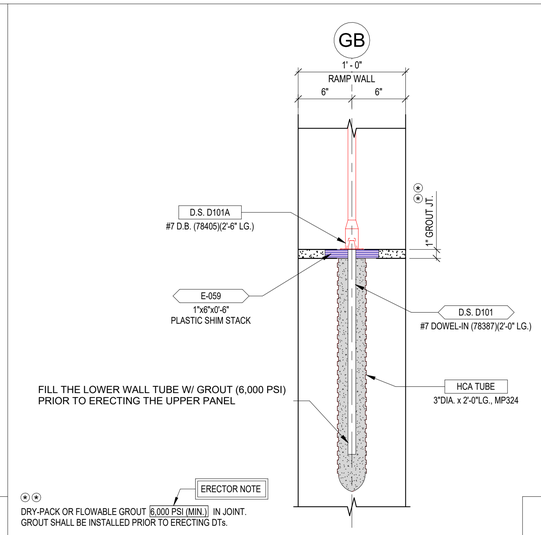
PROJECT:
GRANITE RUN PHASE II
MIDDLETOWN TOWNSHIP, PA
SECTIONS AND DETAILS (37-48)

JERSEY PRECAST
853 NOTTINGHAM WAY
HAMILTON TOWNSHIP, NJ 08638
PH: 609-689-3700 FAX: 609-689-3797

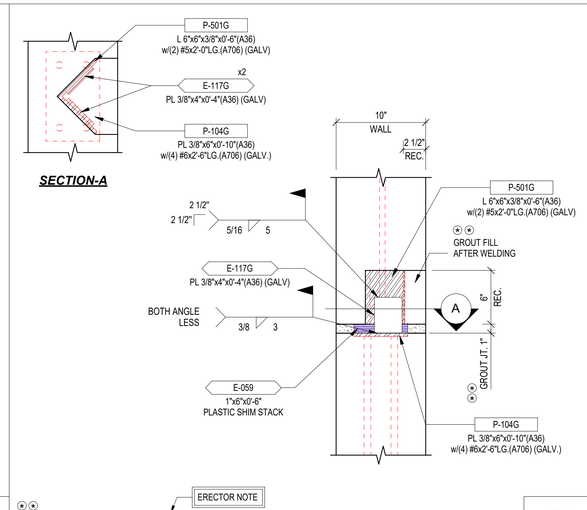
CEG JOB NO. 22551
JOB NO. 22040
SHEET NO. E6.03



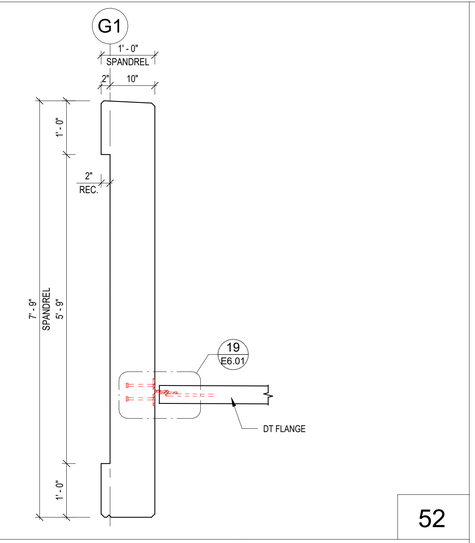
49



50



51



52

53

54

55

56

57

58

59

ERECTOR NOTE
DRY-PACK OR FLOWABLE GROUT 6,000 PSI (MIN.) IN JOINT.
GROUT SHALL BE INSTALLED PRIOR TO ERECTING DTs.

60

DRAWN BY: OOM
CHECKED BY:
DATE: 11/04/22

SUBMITTALS/REVISIONS:

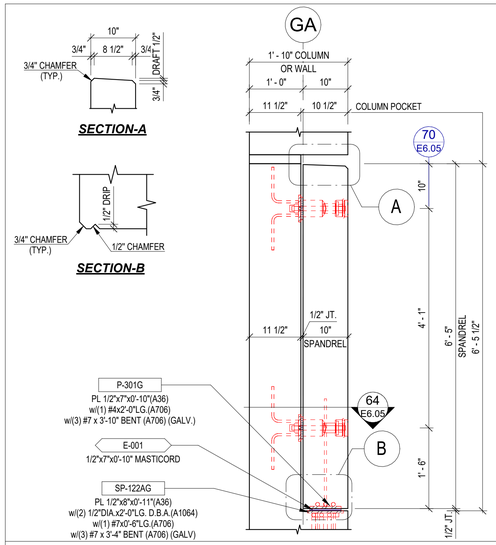
A	FOR APPROVAL	01/05/23

THE CONSULTING ENGINEERS GROUP Inc.
14502 Philadelphia Road - SUITE 105 - GAITHERSBURG, MD 20878
(O) 301-330-2777 FAX (410) 437-1172 E-MAIL: engineers@cegpa.com

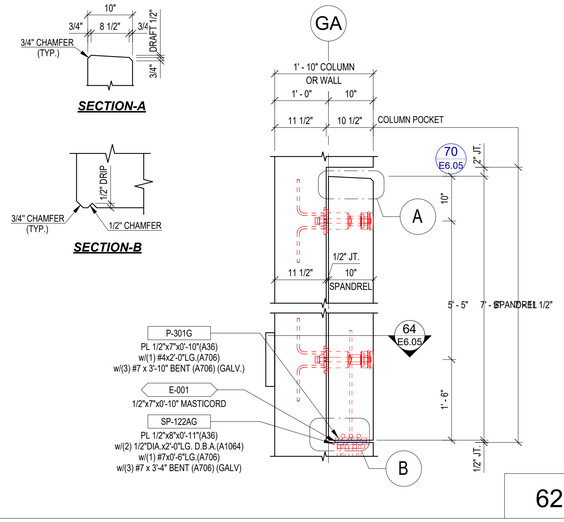
PROJECT:
GRANITE RUN PHASE II
MIDDLETOWN TOWNSHIP, PA
SECTIONS AND DETAILS (49-60)

JERSEY PRECAST
853 NOTTINGHAM WAY
HAMILTON TOWNSHIP, NJ 08638
PH: 609-689-3700 FAX: 609-689-3797

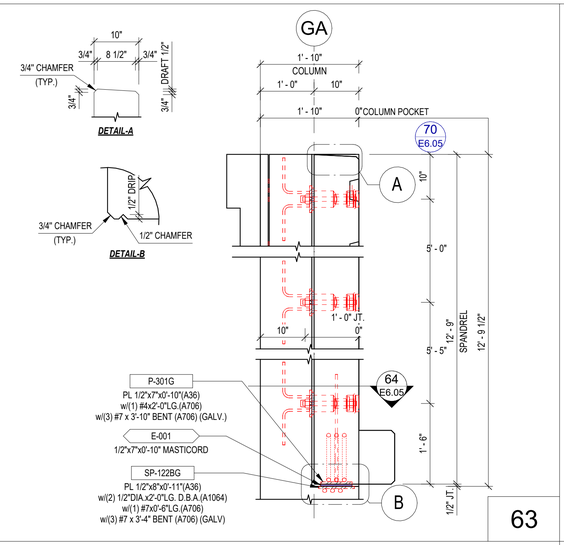
CEG JOB NO.
22551
JOB NO.
22040
SHEET NO.
E6.04



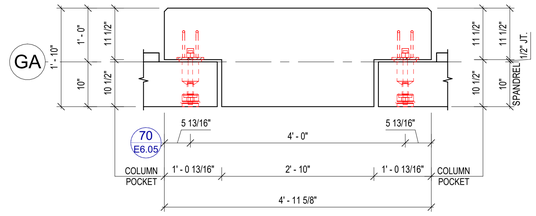
61



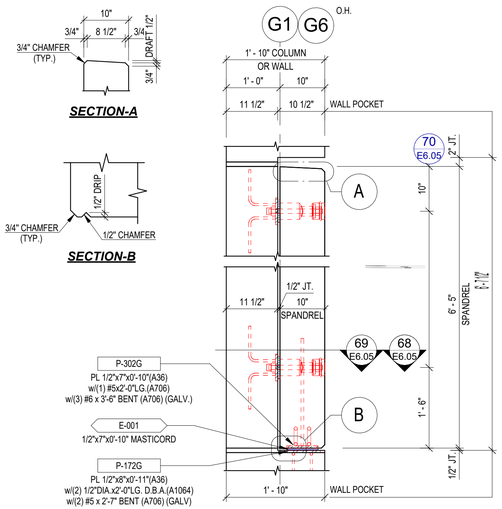
62



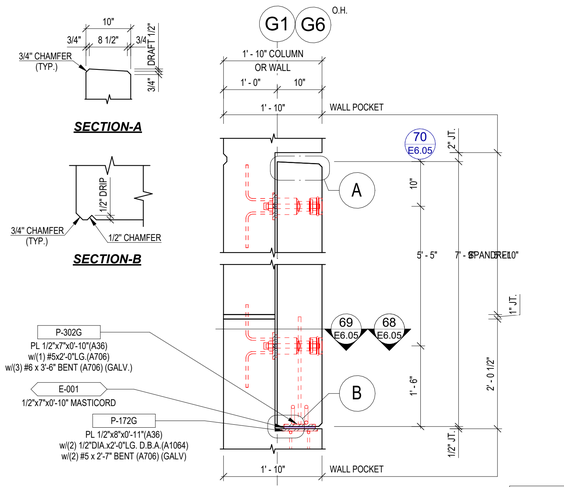
63



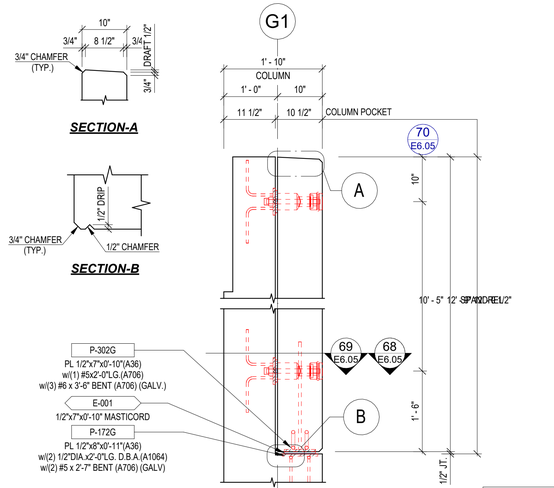
64



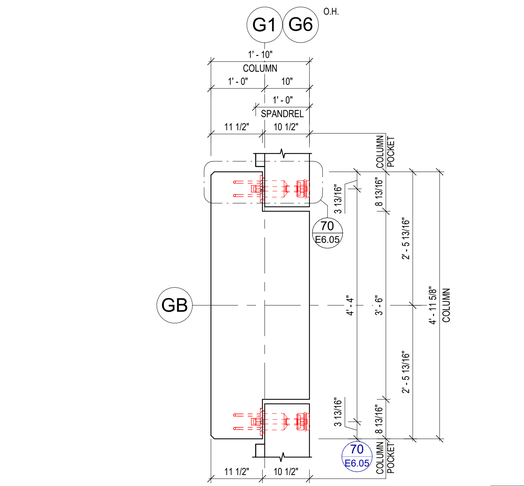
65



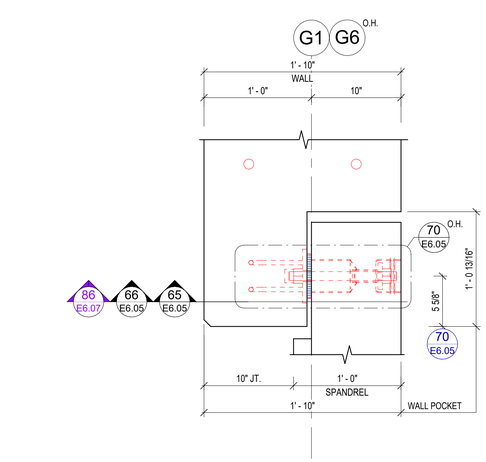
66



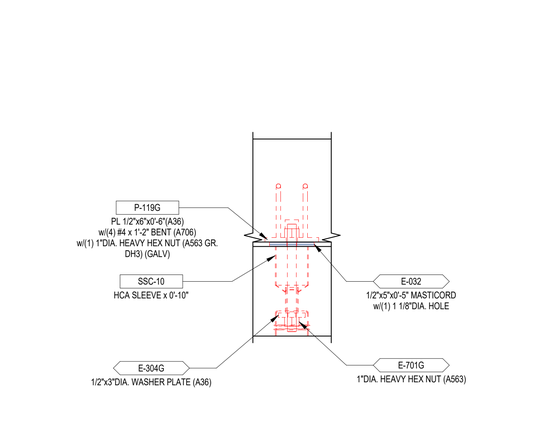
67



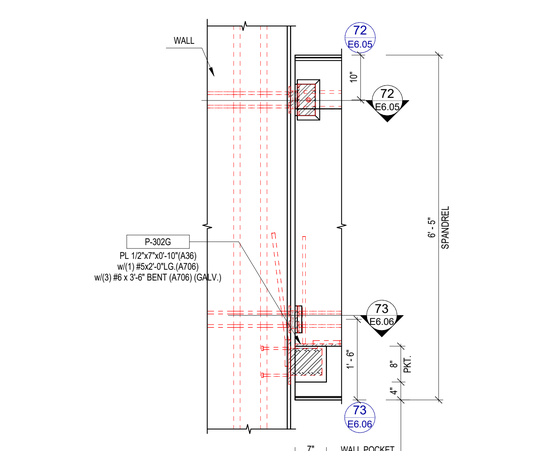
68



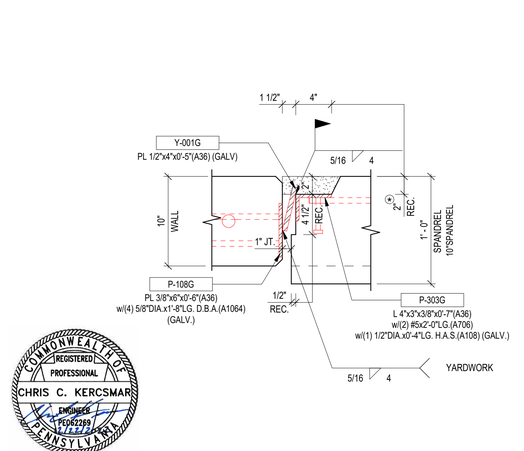
69



70



71



FILL RECESS W/(6000 PSI) GROUT AFTER WELDS ARE INSPECTED AND APPROVED

72

DRAWN BY: OOM
CHECKED BY:
DATE: 11/07/22

SUBMITTALS/REVISIONS:

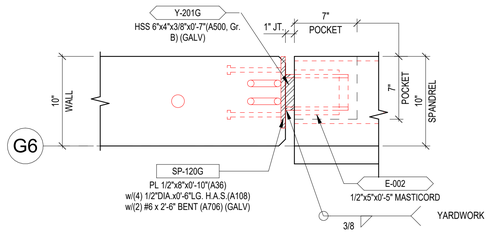
A	FOR APPROVAL 01/05/23

The CONSULTING ENGINEERS GROUP Inc.
14352 Parkinson Road - SUITE 100 - SAN ANTONIO, TX 78233
PH 830-637-9377 FAX 210-637-1172 E-MAIL engineers@cegtx.com

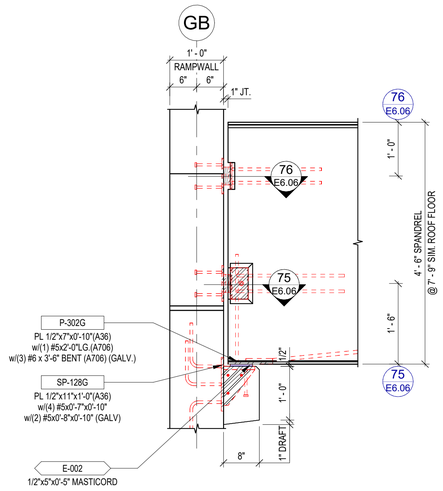
PROJECT:
GRANITE RUN PHASE II
MIDDLETOWN TOWNSHIP, PA
SECTIONS AND DETAILS (61-72)

JERSEY PRECAST
853 NOTTINGHAM WAY
HAMILTON TOWNSHIP, NJ 08638
PH: 609-689-3700 FAX: 609-689-3797

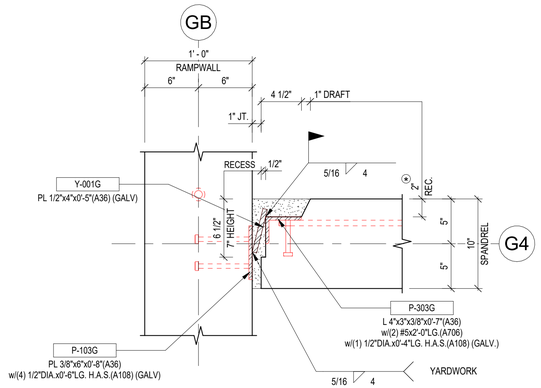
CEG JOB NO. 22551
JOB NO. 22040
SHEET NO. E6.05



73

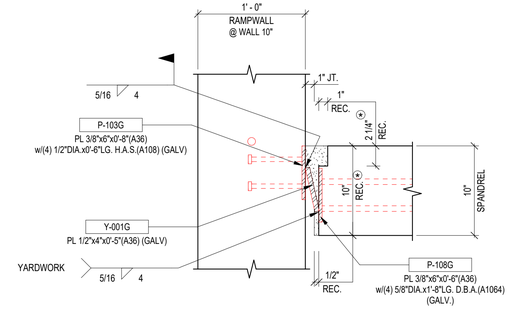


74



FILL RECESS W/(6000 PSI) GROUT AFTER WELDS ARE INSPECTED AND APPROVED

75



FILL RECESS W/(6000 PSI) GROUT AFTER WELDS ARE INSPECTED AND APPROVED

76

FILL RECESS W/(6000 PSI) GROUT AFTER WELDS ARE INSPECTED AND APPROVED

77

FILL RECESS W/(6000 PSI) GROUT AFTER WELDS ARE INSPECTED AND APPROVED

78

FILL RECESS W/(6000 PSI) GROUT AFTER WELDS ARE INSPECTED AND APPROVED

79

FILL RECESS W/(6000 PSI) GROUT AFTER WELDS ARE INSPECTED AND APPROVED

80

FILL RECESS W/(6000 PSI) GROUT AFTER WELDS ARE INSPECTED AND APPROVED

81

82

FILL RECESS W/(6000 PSI) GROUT AFTER WELDS ARE INSPECTED AND APPROVED

83

COMMONWEALTH OF PENNSYLVANIA
REGISTERED PROFESSIONAL ENGINEER
CHRIS C. KERCSMAR
PE062289

FILL RECESS W/(6000 PSI) GROUT AFTER WELDS ARE INSPECTED AND APPROVED

84

DRAWN BY: OOM
CHECKED BY:
DATE: 11/09/22

SUBMITTALS/REVISIONS:

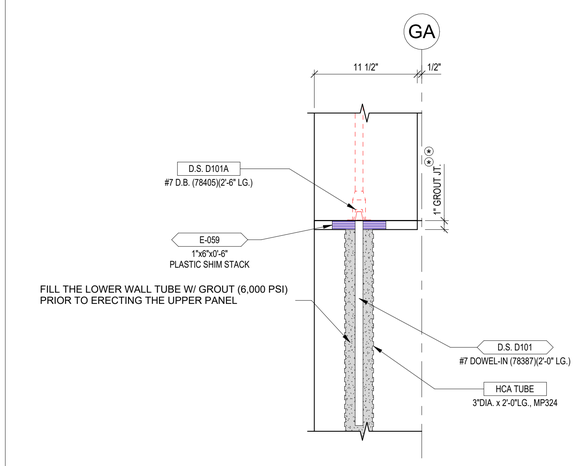
	01/05/23
A	FOR APPROVAL

THE CONSULTING ENGINEERS GROUP Inc.
14352 Parkinson Road - SUITE 105 - SAN ANTONIO, TX 78233
PH 637-7377 FAX 2781 637-1172 E-MAIL engineers@cegtex.com

PROJECT:
GRANITE RUN PHASE II
MIDDLETOWN TOWNSHIP, PA
SECTIONS AND DETAILS (73-84)

JERSEY PRECAST
853 NOTTINGHAM WAY
HAMILTON TOWNSHIP, NJ 08638
PH: 609-689-3700 FAX: 609-689-3797

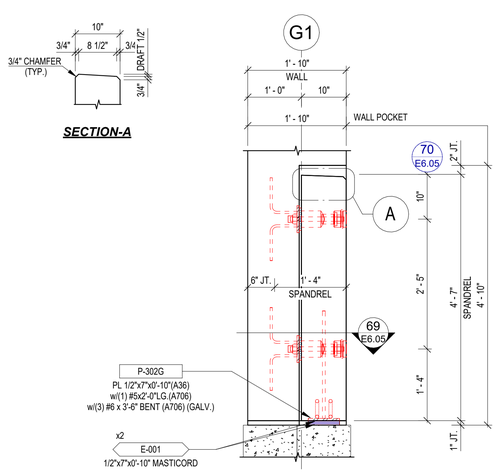
CEG JOB NO. 22551
JOB NO. 22040
SHEET NO. E6.06



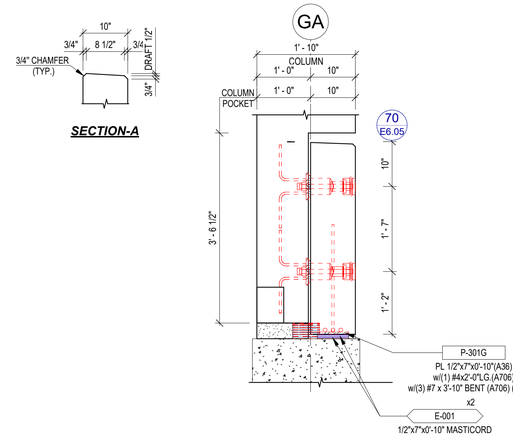
ERECTOR NOTE

DRY-PACK OR FLOWABLE GROUT 6,000 PSI (MIN.) IN JOINT.
GROUT SHALL BE INSTALLED PRIOR TO ERECTING DTs.

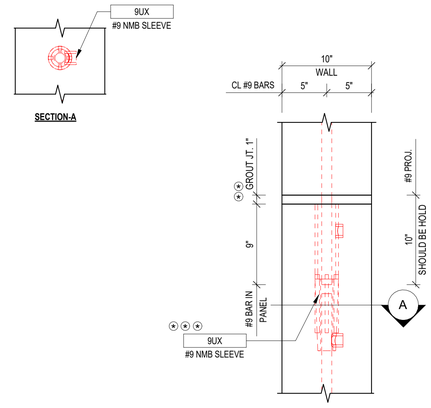
85



86



87

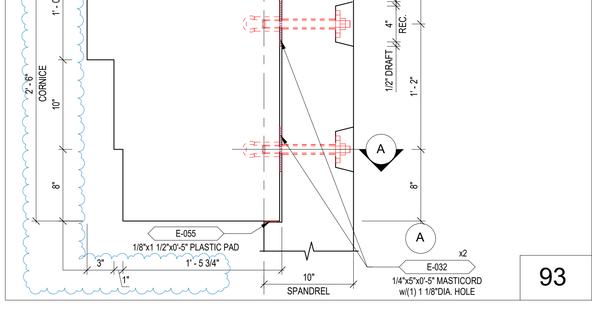


ERECTOR NOTE

DRY-PACK OR FLOWABLE GROUT 6,000 PSI (MIN.) IN JOINT.
GROUT SHALL BE INSTALLED PRIOR TO ERECTING DTs.

NMB SLEEVES TO BE GROUTED W/SS MORTAR
PER THE MANUFACTURER'S SPECIFICATIONS

88



ERECTOR NOTE

DRY-PACK OR FLOWABLE GROUT 6,000 PSI (MIN.) IN JOINT.
GROUT SHALL BE INSTALLED PRIOR TO ERECTING DTs.

NMB SLEEVES TO BE GROUTED W/SS MORTAR
PER THE MANUFACTURER'S SPECIFICATIONS

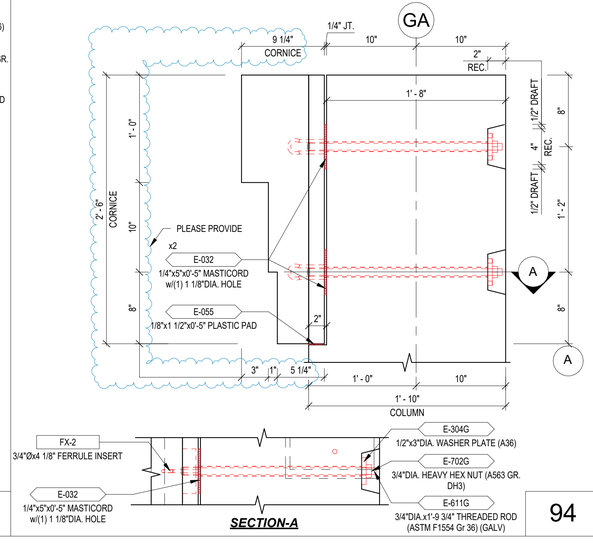
89

90

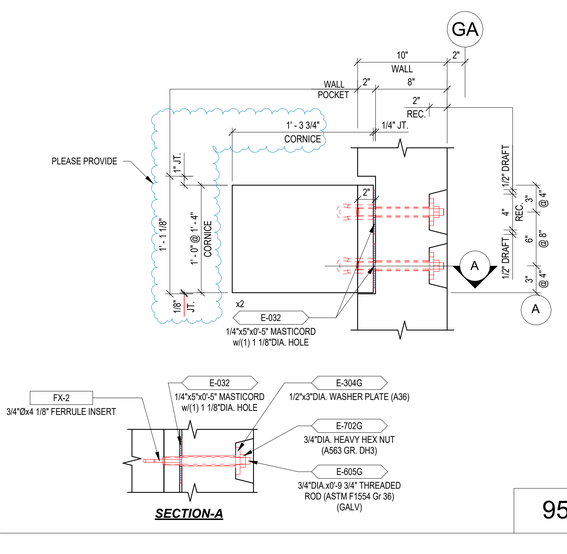
91

92

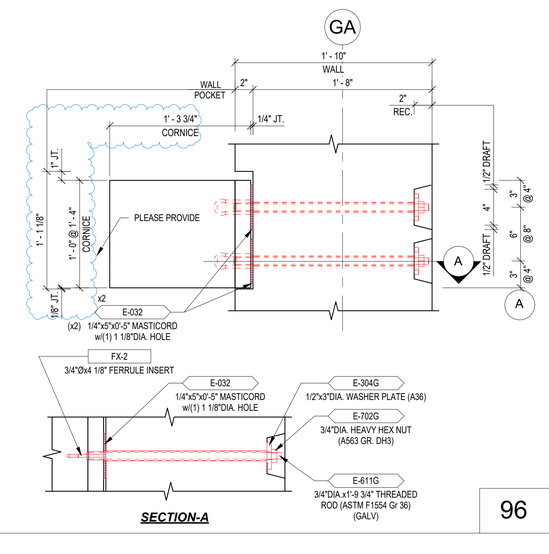
93



94



95



96

DRY-PACK OR FLOWABLE GROUT 9,000 PSI (MIN.)
GROUT SHALL BE INSTALLED PRIOR TO ERECTING DTs.

COMMONWEALTH OF PENNSYLVANIA
REGISTERED PROFESSIONAL
CHRIS C. KERCSMAR
ENGINEER
PE062289

DRAWN BY: OOM
CHECKED BY:
DATE: 11/15/22

SUBMITTALS/REVISIONS:

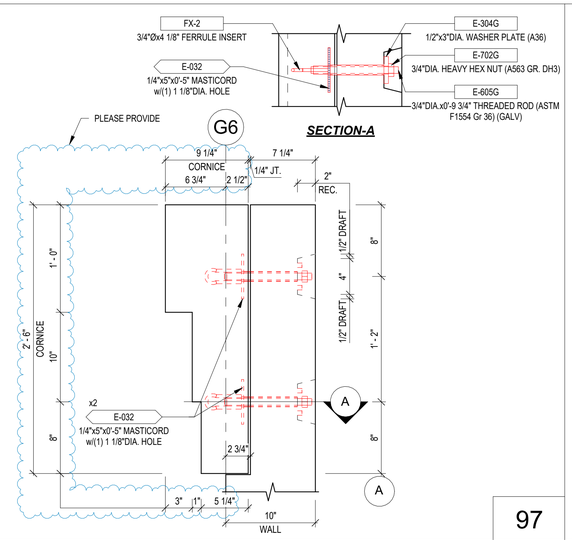
A	FOR APPROVAL	01/05/23

The CONSULTING ENGINEERS GROUP Inc.
14202 Piedmont Rd - SUITE 105 - OKLAHOMA CITY, OK 73134
PH 405-607-8777 FAX 405-607-8776 E-MAIL engineers@cegokc.com

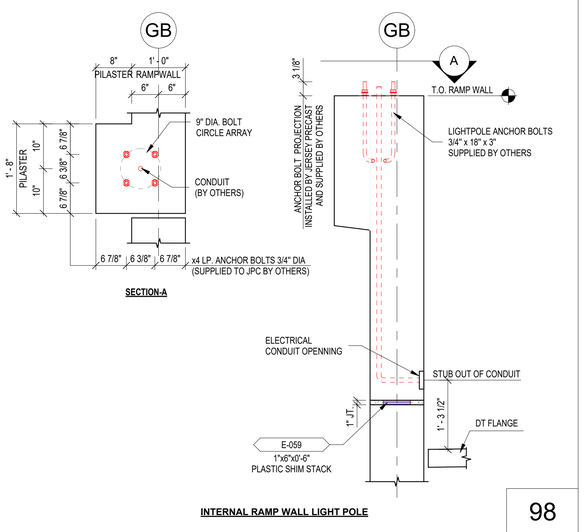
PROJECT:
GRANITE RUN PHASE II
MIDDLETOWN TOWNSHIP, PA
SECTIONS AND DETAILS (85-96)

JERSEY PRECAST
853 NOTTINGHAM WAY
HAMILTON TOWNSHIP, NJ 08638
PH: 609-689-3700 FAX: 609-689-3797

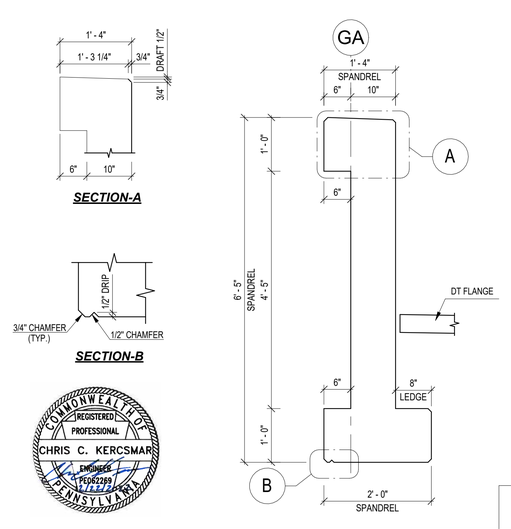
CEG JOB NO. 22551
JOB NO. 22040
SHEET NO. E6.07



97



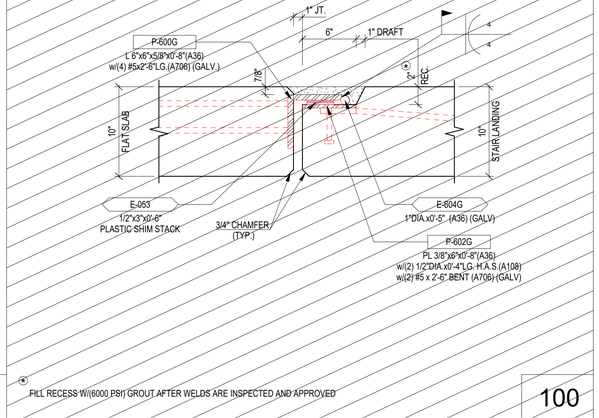
98



99

COMMONWEALTH OF PENNSYLVANIA
REGISTERED PROFESSIONAL
CHRIS C. KERCSMAR
ENGINEER
PE062269

NOT INCLUDED IN THIS SUBMITTAL



FILL RECESS W/(6000 PSI) GROUT AFTER WELDS ARE INSPECTED AND APPROVED

100

DRAWN BY: OOM
CHECKED BY:
DATE: 12/19/22

SUBMITTALS/REVISIONS:

A	FOR APPROVAL	01/05/23

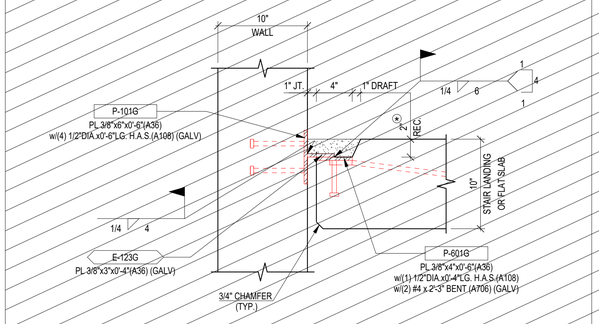
THE CONSULTING ENGINEERS GROUP Inc.
14002 Preston Park Road - Suite 100 - San Antonio, TX 78232
PH 830-9979 FAX (210) 829-1172 E-MAIL engineers@cegtx.com

PROJECT:
GRANITE RUN PHASE II
MIDDLETOWN TOWNSHIP, PA
SECTIONS AND DETAILS (97-108)

JERSEY PRECAST
853 NOTTINGHAM WAY
HAMILTON TOWNSHIP, NJ 08638
PH: 609-689-3700 FAX: 609-689-3797

CEG JOB NO. 22551
JOB NO. 22040
SHEET NO. E6.08

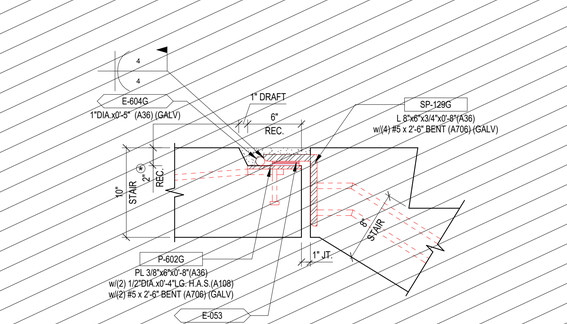
NOT INCLUDED IN THIS SUBMITTAL



FILL RECESS W/(6000 PSI) GROUT AFTER WELDS ARE INSPECTED AND APPROVED

101

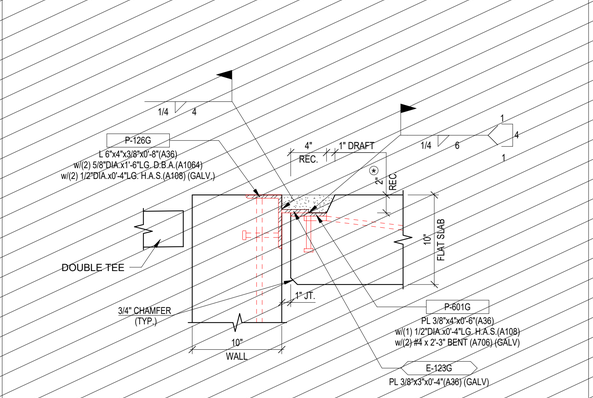
NOT INCLUDED IN THIS SUBMITTAL



FILL RECESS W/(6000 PSI) GROUT AFTER WELDS ARE INSPECTED AND APPROVED

102

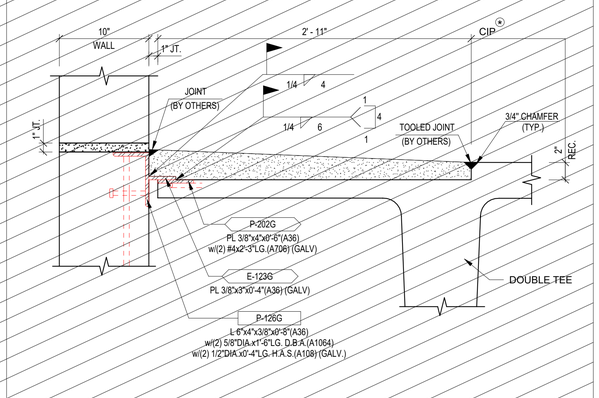
NOT INCLUDED IN THIS SUBMITTAL



FILL RECESS W/(6000 PSI) GROUT AFTER WELDS ARE INSPECTED AND APPROVED

103

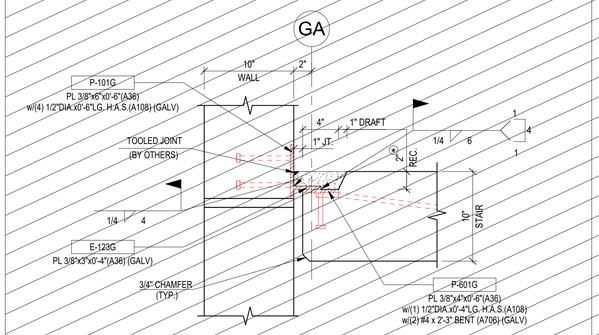
NOT INCLUDED IN THIS SUBMITTAL



SEE STRUCTURAL DRAWINGS FOR C.I.P. INFO, INCLUDING REINFORCEMENT STEEL (BY OTHERS)

104

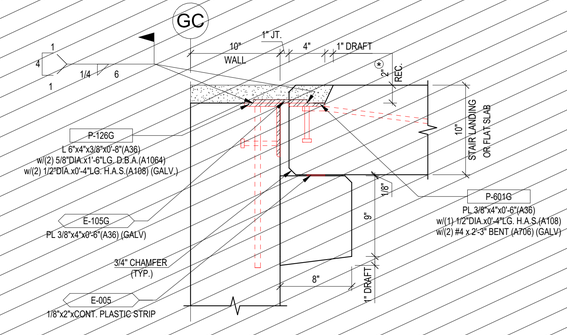
NOT INCLUDED IN THIS SUBMITTAL



FILL RECESS W/(6000 PSI) GROUT AFTER WELDS ARE INSPECTED AND APPROVED

105

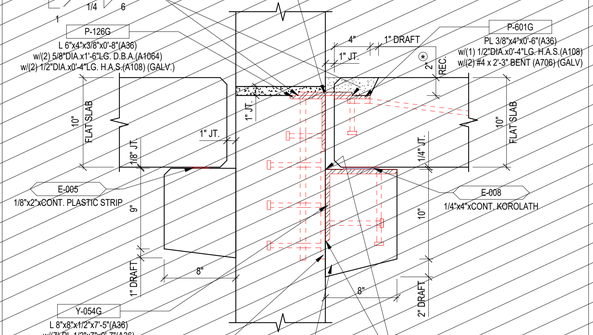
NOT INCLUDED IN THIS SUBMITTAL



FILL RECESS W/(6000 PSI) GROUT AFTER WELDS ARE INSPECTED AND APPROVED

106

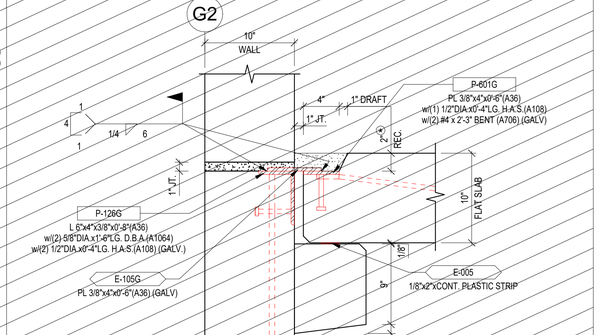
NOT INCLUDED IN THIS SUBMITTAL



FILL RECESS W/(6000 PSI) GROUT AFTER WELDS ARE INSPECTED AND APPROVED

107

NOT INCLUDED IN THIS SUBMITTAL



FILL RECESS W/(6000 PSI) GROUT AFTER WELDS ARE INSPECTED AND APPROVED

108