

# Granite Run Apartment 02

**1133 Baltimore Pike (Residential)**
**1127 Baltimore Pike (Retail)**

MIDDLETOWN TOWNSHIP, PA

## THE MARTIN ARCHITECTURAL GROUP, P.C.
## Philadelphia, Pennsylvania

**PERMIT SET**

12/20/2022

| NO. | REVISION | DATE |
|---|---|---|
| 1 | PERMIT SET | 12/20/22 |

**1362-12**

**BET INVESTMENTS**
**Granite Run Apartment 02**
MIDDLETOWN TOWNSHIP, PA

PERMIT SET
12/20/22

©2022, The Martin Architectural Group, P.C.


**OWNER:** BET INVESTMENTS
Client Address
P: xxx.xxx.xxxx F: xxx.xxx.xxxx
Contact: Contact Name
e: Client E-mail

**ARCHITECT:** The Martin Architectural Group
240 N 22nd St, Philadelphia, PA 19103
P: 215.665.1080 F: xxx.xxx.xxxx
Contact: Drew A. Romanic, AIA
e: dromanic@martinaia.com

**STRUCTURAL ENGINEER:** BALA Engineers
443 South Gulph Road,
King of Prussia, PA 19406
P: 610.649.8000 F: xxx.xxx.xxxx
Contact: Steven M. Anastasio, PE
e: sma@bala.com

**MECHANICAL ENGINEER:** BALA Engineers
443 South Gulph Road,
King of Prussia, PA 19406
P: 610.649.8000 F: xxx.xxx.xxxx
Contact: Todd R. Tewksbury, PE
e: trt@bala.com

**CIVIL ENGINEER:** T and M Associates
1700 Market Street Ste. 3110,
Philadelphia, PA 19103
P: 215.282.7850 F: 215.627.3459
Contact: Christopher Jensen, PE
e: cjensen@tandmassociates.com


Printed: 1/13/2023 4:18:05 PM

| UNIT | U-A | | U-B | | U-B FW-1 | | U-B5 | | | U-C2 | | | U-B3 | | U-B4 | | U-B2 | | U-B6 | | U-C | | U-C FW-1 | | U-D | | | U-D FOYER 1 | | | U-D2 FOYER 1 | | | U-D2 FOYER 2 | | | U-E | | | U-E FW-1 | | | U-E FW-2 | | | U-E FW-3 | | | U-E FW-4 | | | Building Totals | | | |
|---|---|---

## _MASTER SHEET LIST

| Discipline | Sheet Number | Sheet Name |
|---|---|---|
| 05-ARCHITECTURAL | A0.00 | COVER SHEET |
| 05-ARCHITECTURAL | A0.01 | GENERAL INFORMATION |
| 05-ARCHITECTURAL | A0.02 | SHEET INDEX |
| 05-ARCHITECTURAL | A0.03 | ARCHITECTURAL SITE PLAN |
| 05-ARCHITECTURAL | A0.04 | FIRE AREAS |
| 05-ARCHITECTURAL | A0.05 | AREA PLANS |
| 05-ARCHITECTURAL | A1.01 | LIFE SAFETY PLAN - RETAIL LEVEL |
| 05-ARCHITECTURAL | A1.02 | LIFESAFETY PLAN - CLUB LEVEL 1 |
| 05-ARCHITECTURAL | A1.03 | LIFESAFETY PLAN - CLUB LEVEL 2 |
| 05-ARCHITECTURAL | A1.04 | LIFESAFETY PLAN - 1ST FLOOR |
| 05-ARCHITECTURAL | A1.05 | LIFESAFETY PLAN - 2ND & 3RD FL |
| 05-ARCHITECTURAL | A1.06 | LIFESAFETY PLAN - 4TH FLOOR |
| 05-ARCHITECTURAL | A2.00 | FOUNDATION PLAN |
| 05-ARCHITECTURAL | A2.00A | FOUNDATION PLAN - RETAIL LEVEL |
| 05-ARCHITECTURAL | A2.00B | FOUNDATION PLAN - CLUB LEVEL 1 |
| 05-ARCHITECTURAL | A2.00C | FOUNDATION PLAN - CLUB LEVEL 2 |
| 05-ARCHITECTURAL | A2.00D | FOUNDATION PLAN - FIRST FLOOR A |
| 05-ARCHITECTURAL | A2.00E | FOUNDATION PLAN - FIRST FLOOR B |
| 05-ARCHITECTURAL | A2.01 | RETAIL FLOOR PLAN |
| 05-ARCHITECTURAL | A2.01A | ENLARGED RETAIL FLOOR PLAN |
| 05-ARCHITECTURAL | A2.02 | CLUB LEVEL 1 FLOOR PLAN |
| 05-ARCHITECTURAL | A2.02A | ENLARGED CLUB LEVEL 1 PLAN |
| 05-ARCHITECTURAL | A2.03 | CLUB LEVEL 2 FLOOR PLAN |
| 05-ARCHITECTURAL | A2.03A | ENLARGED CLUB LEVEL 2 PLAN |
| 05-ARCHITECTURAL | A2.04 | FIRST FLOOR PLAN |
| 05-ARCHITECTURAL | A2.04A | ENLARGED FIRST FLOOR PLAN A |
| 05-ARCHITECTURAL | A2.04B | ENLARGED FIRST FLOOR PLAN B |
| 05-ARCHITECTURAL | A2.04C | ENLARGED FIRST FLOOR PLAN C |
| 05-ARCHITECTURAL | A2.04D | ENLARGED FIRST FLOOR PLAN D |
| 05-ARCHITECTURAL | A2.05 | SECOND FLOOR PLAN |
| 05-ARCHITECTURAL | A2.05A | ENLARGED SECOND FLOOR PLAN A |
| 05-ARCHITECTURAL | A2.05B | ENLARGED SECOND FLOOR PLAN B |
| 05-ARCHITECTURAL | A2.05C | ENLARGED SECOND FLOOR PLAN C |
| 05-ARCHITECTURAL | A2.05D | ENLARGED SECOND FLOOR PLAN D |
| 05-ARCHITECTURAL | A2.06 | THIRD FLOOR PLAN |
| 05-ARCHITECTURAL | A2.06A | ENLARGED THIRD FLOOR PLAN A |
| 05-ARCHITECTURAL | A2.06B | ENLARGED THIRD FLOOR PLAN B |
| 05-ARCHITECTURAL | A2.06C | ENLARGED THIRD FLOOR PLAN C |
| 05-ARCHITECTURAL | A2.06D | ENLARGED THIRD FLOOR PLAN D |
| 05-ARCHITECTURAL | A2.07 | FOURTH FLOOR PLAN |
| 05-ARCHITECTURAL | A2.07A | ENLARGED FOURTH FLOOR PLAN A |
| 05-ARCHITECTURAL | A2.07B | ENLARGED FOURTH FLOOR PLAN B |
| 05-ARCHITECTURAL | A2.07C | ENLARGED FOURTH FLOOR PLAN C |
| 05-ARCHITECTURAL | A2.07D | ENLARGED FOURTH FLOOR PLAN D |
| 05-ARCHITECTURAL | A2.08 | ROOF PLAN |
| 05-ARCHITECTURAL | A2.08A | ROOF DRAIN AREAS |
| 05-ARCHITECTURAL | A2.11 | UNIT PLANS (UNIT A) |
| 05-ARCHITECTURAL | A2.12 | UNIT PLANS (UNIT B) |
| 05-ARCHITECTURAL | A2.13 | UNIT PLANS (UNIT B-FW1) |
| 05-ARCHITECTURAL | A2.14 | UNIT PLANS (UNIT B2) |
| 05-ARCHITECTURAL | A2.15 | UNIT PLANS (UNIT B3) |
| 05-ARCHITECTURAL | A2.16 | UNIT PLANS (UNIT B4) |
| 05-ARCHITECTURAL | A2.17 | UNIT PLANS (UNIT B5) |
| 05-ARCHITECTURAL | A2.18 | UNIT PLANS (UNIT B6) |
| 05-ARCHITECTURAL | A2.19 | UNIT PLANS (UNIT C) |
| 05-ARCHITECTURAL | A2.20 | UNIT PLANS (UNIT C-FW1) |
| 05-ARCHITECTURAL | A2.21 | UNIT PLAN (UNIT C2) |
| 05-ARCHITECTURAL | A2.22 | UNIT PLANS (UNIT D, D-F1) |
| 05-ARCHITECTURAL | A2.23 | UNIT PLANS (UNIT D2-F1, D2-F2) |
| 05-ARCHITECTURAL | A2.24 | UNIT PLAN (UNIT E) |
| 05-ARCHITECTURAL | A2.25 | UNIT PLANS (UNIT E-FW1) |
| 05-ARCHITECTURAL | A2.26 | UNIT PLANS (E-FW2) |
| 05-ARCHITECTURAL | A2.27 | UNIT PLANS (UNIT E-FW3) |
| 05-ARCHITECTURAL | A2.28 | UNIT PLANS (E-FW4) |
| 05-ARCHITECTURAL | A2.29A | UNIT PLAN (UNIT B TYPE A) |
| 05-ARCHITECTURAL | A2.29B | UNIT PLAN (UNIT C TYPE A) |
| 05-ARCHITECTURAL | A2.30 | RETAIL LEVEL RCP |
| 05-ARCHITECTURAL | A2.31 | CLUB LEVEL 1-2 RCP |
| 05-ARCHITECTURAL | A2.32 | FIRST FLOOR REFLECTED CEILING PLAN |
| 05-ARCHITECTURAL | A2.33 | SECOND FLOOR REFLECTED CEILING PLAN |
| 05-ARCHITECTURAL | A2.34 | THIRD FLOOR REFLECTED CEILING PLAN |
| 05-ARCHITECTURAL | A2.35 | FOURTH FLOOR REFLECTED CEILING PLAN |
| 05-ARCHITECTURAL | A3.01 | ELEVATIONS |
| 05-ARCHITECTURAL | A3.02 | ELEVATIONS |
| 05-ARCHITECTURAL | A3.10 | ENLARGED ELEVATIONS |
| 05-ARCHITECTURAL | A3.11 | ENLARGED ELEVATIONS |
| 05-ARCHITECTURAL | A3.12 | ENLARGED ELEVATIONS |
| 05-ARCHITECTURAL | A3.13 | ENLARGED ELEVATIONS |
| 05-ARCHITECTURAL | A3.14 | ENLARGED ELEVATIONS |
| 05-ARCHITECTURAL | A3.15 | ENLARGED ELEVATIONS |
| 05-ARCHITECTURAL | A3.20 | PERSPECTIVES |
| 05-ARCHITECTURAL | A3.21 | PERSPECTIVES |
| 05-ARCHITECTURAL | A4.01 | SECTIONS |
| 05-ARCHITECTURAL | A4.02 | SECTIONS |
| 05-ARCHITECTURAL | A4.03 | SECTIONS |
| 05-ARCHITECTURAL | A4.10 | WALL SECTIONS |
| 05-ARCHITECTURAL | A4.11 | WALL SECTIONS |
| 05-ARCHITECTURAL | A4.12 | WALL SECTIONS |
| 05-ARCHITECTURAL | A4.13 | WALL SECTIONS |
| 05-ARCHITECTURAL | A4.14 | WALL SECTIONS |
| 05-ARCHITECTURAL | A5.01 | DETAILS |
| 05-ARCHITECTURAL | A5.02 | DETAILS |
| 05-ARCHITECTURAL | A5.03 | DETAILS |
| 05-ARCHITECTURAL | A5.04 | DETAILS (FIRE WALL) |
| 05-ARCHITECTURAL | A5.05 | DETAILS |
| 05-ARCHITECTURAL | A5.06 | DETAILS |
| 05-ARCHITECTURAL | A5.07 | EXPANSION JOINT DETAILS |
| 05-ARCHITECTURAL | A5.09 | DETAILS |
| 05-ARCHITECTURAL | A5.10 | FIRE RATED ASSEMBLIES |
| 05-ARCHITECTURAL | A5.11 | FIRE RATED ASSEMBLIES |
| 05-ARCHITECTURAL | A5.12 | FIRE RATED ASSEMBLIES |
| 05-ARCHITECTURAL | A5.13 | FIRE RATED ASSEMBLIES |
| 05-ARCHITECTURAL | A5.14 | FIRE RATED ASSEMBLIES |
| 05-ARCHITECTURAL | A5.15 | FIRE RATED ASSEMBLIES |
| 05-ARCHITECTURAL | A5.16 | FIRE RATED ASSEMBLIES |
| 05-ARCHITECTURAL | A5.17 | FIRE RATED ASSEMBLIES |
| 05-ARCHITECTURAL | A5.18 | FIRE RATED ASSEMBLIES |
| 05-ARCHITECTURAL | A6.01 | STAIR 1&2 PLANS |
| 05-ARCHITECTURAL | A6.02 | STAIR 3 PLANS |
| 05-ARCHITECTURAL | A6.03 | STAIR 4 PLANS |
| 05-ARCHITECTURAL | A6.04 | STAIR 9 PLANS |
| 05-ARCHITECTURAL | A6.05 | STAIR 5&6 PLANS |
| 05-ARCHITECTURAL | A6.06 | STAIR 7&8 PLANS |
| 05-ARCHITECTURAL | A6.07 | ELEVATOR 1&2 PLANS |
| 05-ARCHITECTURAL | A6.08 | TRASH RM PLANS |
| 05-ARCHITECTURAL | A6.09 | STAIR AND ELEVATOR DETAILS |
| 05-ARCHITECTURAL | A6.10 | ENLARGED SITE AREAS |

## _MASTER SHEET LIST

| Discipline | Sheet Number | Sheet Name |
|---|---|---|
| 05-ARCHITECTURAL | A7.01 | PARTITION SCHEDULES |
| 05-ARCHITECTURAL | A7.02 | DOOR AND WINDOW SCHEDULES |
| 05-ARCHITECTURAL | A7.03 | STOREFRONT SCHEDULE |
| 05-ARCHITECTURAL | A7.04 | DOOR HARDWARE SCHEDULE |
| 05-ARCHITECTURAL | A10.01 | ACCESSIBILITY INFORMATION |
| 05-ARCHITECTURAL | A10.02 | ACCESSIBILITY INFORMATION |
| 05-ARCHITECTURAL | A10.03 | ACCESSIBILITY INFORMATION |
| 05-ARCHITECTURAL | A10.04 | ACCESSIBILITY INFORMATION |
| 05-ARCHITECTURAL | A10.05 | ACCESSIBILITY INFORMATION |
| 05-ARCHITECTURAL | A10.06 | ACCESSIBILITY INFORMATION |
| 05-ARCHITECTURAL | A10.07 | ACCESSIBILITY INFORMATION |
| 06- STRUCTURAL | GS0.01 | GARAGE STRUCTURES, ABBREVIATIONS |
| 06- STRUCTURAL | GS1.00 | GARAGE FOUNDATION PLAN |
| 06- STRUCTURAL | GS2.01 | GARAGE DETAILS AND SECTIONS |
| 06- STRUCTURAL | S0.01 | STRUCTURAL NOTES, ABBREVIATIONS, AND SYMBOLS |
| 06- STRUCTURAL | S0.02 | STRUCTURAL NOTES AND SCHEDULES |
| 06- STRUCTURAL | S1.00 | OVERALL FOUNDATION PLAN |
| 06- STRUCTURAL | S1.00A | RETAIL LEVEL FOUNDATION PLAN |
| 06- STRUCTURAL | S1.01A | CLUB LEVEL 1 FOUNDATION PART PLANS |
| 06- STRUCTURAL | S1.02A | CLUB LEVEL 2 FOUNDATION PLAN |
| 06- STRUCTURAL | S1.03 | FIRE FLOOR FRAMING PLAN |
| 06- STRUCTURAL | S1.03A | FIRST FLOOR FRAMING ENLARGED PLAN A |
| 06- STRUCTURAL | S1.03B | FIRST FLOOR FRAMING ENLARGED PLAN B |
| 06- STRUCTURAL | S1.03C | FIRST FLOOR FRAMING ENLARGED PLAN C |
| 06- STRUCTURAL | S1.03D | FIRST FLOOR FRAMING ENLARGED PLAN D |
| 06- STRUCTURAL | S1.04 | 2ND FLOOR FRAMING PLAN |
| 06- STRUCTURAL | S1.04A | SECOND FLOOR FRAMING ENLARGED PLAN B |
| 06- STRUCTURAL | S1.05 | THIRD FLOOR FRAMING PLAN |
| 06- STRUCTURAL | S1.06 | FOURTH FLOOR FRAMING PLAN |
| 06- STRUCTURAL | S1.10 | ROOF FRAMING PLAN |
| 06- STRUCTURAL | S1.10A | ROOF FRAMING ENLARGED PLAN A |
| 06- STRUCTURAL | S1.10B | ROOF FRAMING ENLARGED PLAN B |
| 06- STRUCTURAL | S1.10C | ROOF FRAMING ENLARGED PLAN C |
| 06- STRUCTURAL | S1.10D | ROOF FRAMING ENLARGED PLAN D |
| 06- STRUCTURAL | S2.01 | FOUNDATION TYPICAL DETAILS |
| 06- STRUCTURAL | S2.02 | FOUNDATION SECTIONS |
| 06- STRUCTURAL | S3.01 | FRAMING TYPICAL DETAILS |
| 06- STRUCTURAL | S3.02 | FRAMING TYPICAL DETAILS |
| 06- STRUCTURAL | S4.01 | WOOD FRAMING TYPICAL DETAILS |
| 06- STRUCTURAL | S4.02 | WOOD FRAMING TYPICAL DETAILS |
| 06- STRUCTURAL | S4.03 | WOOD FRAMING TYPICAL DETAILS |
| 06- STRUCTURAL | S4.04 | WOOD SHEAR WALL SECTION AND DETAILS |
| 06- STRUCTURAL | S4.05 | WOOD SHEAR WALL SECTION AND DETAILS |
| 06- STRUCTURAL | S5.01 | BRACED FRAME ELEVATIONS |
| 06- STRUCTURAL | S6.01 | CMU DETAILS |
| 07-ELECTRICAL | E0.01 | ELECTRICAL TITLE SHEET (NOTES & DWG LIST) |
| 07-ELECTRICAL | E0.02 | ELECTRICAL LEGENDS AND ABBREVIATIONS |
| 07-ELECTRICAL | E0.11 | ELECTRICAL SINGLE LINE DIAGRAM |
| 07-ELECTRICAL | E0.12 | ELECTRICAL SINGLE LINE DIAGRAM |
| 07-ELECTRICAL | E0.21 | ELECTRICAL SCHEDULES |
| 07-ELECTRICAL | E0.22 | ELECTRICAL SCHEDULES |
| 07-ELECTRICAL | E0.31 | ELECTRICAL DETAILS |
| 07-ELECTRICAL | E0.32 | ELECTRICAL DETAILS |
| 07-ELECTRICAL | E2.01A | ELECTRICAL- RETAIL LEVEL POWER PLAN A |
| 07-ELECTRICAL | E2.02B | ELECTRICAL - CLUB LEVEL 1 POWER PLANS B |
| 07-ELECTRICAL | E2.02E | ELECTRICAL - CLUB LEVEL 1 POWER PLAN E |
| 07-ELECTRICAL | E2.03B | ELECTRICAL - CLUB LEVEL 2 POWER PLANS B |
| 07-ELECTRICAL | E2.04 | ELECTRICAL - FIRST FLOOR POWER PLAN |
| 07-ELECTRICAL | E2.04A | ELECTRICAL - FIRST FLOOR ENLARGED POWER PLAN A |
| 07-ELECTRICAL | E2.04B | ELECTRICAL - FIRST FLOOR ENLARGED POWER PLAN B |
| 07-ELECTRICAL | E2.04C | ELECTRICAL - FIRST FLOOR ENLARGED POWER PLAN C |
| 07-ELECTRICAL | E2.04D | ELECTRICAL - FIRST FLOOR ENLARGED POWER PLAN D |
| 07-ELECTRICAL | E2.04E | ELECTRICAL - FIRST FLOOR POWER PLAN |
| 07-ELECTRICAL | E2.05 | ELECTRICAL - SECOND FLOOR POWER PLAN |
| 07-ELECTRICAL | E2.05A | ELECTRICAL - SECOND FLOOR ENLARGED POWER PLAN A |
| 07-ELECTRICAL | E2.05B | ELECTRICAL - SECOND FLOOR ENLARGED POWER PLAN B |
| 07-ELECTRICAL | E2.05C | ELECTRICAL - SECOND FLOOR ENLARGED POWER PLAN C |
| 07-ELECTRICAL | E2.05D | ELECTRICAL - SECOND FLOOR ENLARGED POWER PLAN D |
| 07-ELECTRICAL | E2.05E | ELECTRICAL - SECOND FLOOR POWER PLAN |
| 07-ELECTRICAL | E2.06 | ELECTRICAL - THIRD FLOOR OVERALL POWER PLAN |
| 07-ELECTRICAL | E2.06A | ELECTRICAL - THIRD FLOOR ENLARGED POWER PLAN A |
| 07-ELECTRICAL | E2.06B | ELECTRICAL - THIRD FLOOR ENLARGED POWER PLAN B |
| 07-ELECTRICAL | E2.06C | ELECTRICAL - THIRD FLOOR ENLARGED POWER PLAN C |
| 07-ELECTRICAL | E2.06D | ELECTRICAL - THIRD FLOOR ENLARGED POWER PLAN D |
| 07-ELECTRICAL | E2.06E | ELECTRICAL - THIRD FLOOR POWER PLAN E |
| 07-ELECTRICAL | E2.07 | ELECTRICAL- FOURTH FLOOR OVERALL POWER PLAN |
| 07-ELECTRICAL | E2.07A | ELECTRICAL- FOURTH FLOOR ENLARGED POWER PLAN A |
| 07-ELECTRICAL | E2.07B | ELECTRICAL- FOURTH FLOOR ENLARGED POWER PLAN B |
| 07-ELECTRICAL | E2.07C | ELECTRICAL- FOURTH FLOOR ENLARGED POWER PLAN C |
| 07-ELECTRICAL | E2.07D | ELECTRICAL- FOURTH FLOOR ENLARGED POWER PLAN D |
| 07-ELECTRICAL | E2.07E | ELECTRICAL - FOURTH FLOOR POWER PLAN E |
| 07-ELECTRICAL | E2.08 | ELECTRICAL - ROOF POWER PLAN A |
| 07-ELECTRICAL | E2.08B | ELECTRICAL - ROOF POWER PLAN B |
| 07-ELECTRICAL | E2.08C | ELECTRICAL - ROOF POWER PLAN C |
| 07-ELECTRICAL | E2.08D | ELECTRICAL - ROOF POWER PLAN D |
| 07-ELECTRICAL | E3.01A | ELECTRICAL- RETAIL LEVEL LIGHTING PLAN A |
| 07-ELECTRICAL | E3.02B | ELECTRICAL- CLUB LEVEL 1 LIGHTING PLANS B |
| 07-ELECTRICAL | E3.02E | ELECTRICAL - CLUB LEVEL 1 LIGHTING PLAN E |
| 07-ELECTRICAL | E3.03B | ELECTRICAL - CLUB LEVEL 2 LIGHTING PLANS B |
| 07-ELECTRICAL | E3.04 | ELECTRICAL - FIRST LIGHTING PLAN |
| 07-ELECTRICAL | E3.04A | ELECTRICAL - FIRST FLOOR ENLARGED LIGHTING PLAN A |
| 07-ELECTRICAL | E3.04B | ELECTRICAL - FIRST FLOOR ENLARGED LIGHTING PLAN B |
| 07-ELECTRICAL | E3.04C | ELECTRICAL - FIRST FLOOR ENLARGED LIGHTING PLAN C |
| 07-ELECTRICAL | E3.04D | ELECTRICAL - FIRST FLOOR ENLARGED LIGHTING PLAN D |
| 07-ELECTRICAL | E3.04E | ELECTRICAL - FIRST FLOOR ENLARGED LIGHTING PLAN E |
| 07-ELECTRICAL | E3.05 | ELECTRICAL - FIRST FLOOR LIGHTING PLAN E |
| 07-ELECTRICAL | E3.05A | ELECTRICAL - SECOND FLOOR ENLARGED LIGHITNG PLAN A |
| 07-ELECTRICAL | E3.05B | ELECTRICAL - SECOND FLOOR ENLARGED LIGHITNG PLANS B |
| 07-ELECTRICAL | E3.05C | ELECTRICAL - SECOND FLOOR ENLARGED LIGHITNG PLANS C |
| 07-ELECTRICAL | E3.05D | ELECTRICAL - SECOND FLOOR ENLARGED LIGHITNG PLANS D |
| 07-ELECTRICAL | E3.05E | ELECTRICAL - SECOND FLOOR LIGHTING PLAN E |
| 07-ELECTRICAL | E3.06 | ELECTRICAL - THIRD FLOOR OVERALL LIGHTING PLAN |
| 07-ELECTRICAL | E3.06A | ELECTRICAL - THIRD FLOOR ENLARGED LIGHTING PLAN A |
| 07-ELECTRICAL | E3.06B | ELECTRICAL - THIRD FLOOR ENLARGED LIGHTING PLANS B |
| 07-ELECTRICAL | E3.06C | ELECTRICAL - THIRD FLOOR ENLARGED LIGHTING PLANS C |
| 07-ELECTRICAL | E3.06D | ELECTRICAL - THIRD FLOOR ENLARGED LIGHTING PLANS D |
| 07-ELECTRICAL | E3.06E | ELECTRICAL - THIRD FLOOR LIGHTING PLAN E |
| 07-ELECTRICAL | E3.07 | ELECTRICAL - FOURTH FLOOR OVERALL LIGHTING PLAN |
| 07-ELECTRICAL | E3.07A | ELECTRICAL- FOURTH FLOOR ENLARGED LIGHTING PLAN A |
| 07-ELECTRICAL | E3.07B | ELECTRICAL- FOURTH FLOOR ENLARGED LIGHTING PLAN B |
| 07-ELECTRICAL | E3.07C | ELECTRICAL- FOURTH FLOOR ENLARGED LIGHTING PLAN C |
| 07-ELECTRICAL | E3.07D | ELECTRICAL- FOURTH FLOOR ENLARGED LIGHTING PLAN D |
| 07-ELECTRICAL | E3.07E | ELECTRICAL - FOURTH FLOOR LIGHTING PLAN E |
| 07-ELECTRICAL | E3.08 | ELECTRICAL - ROOF PLAN A LIGHTING PLAN |
| 07-ELECTRICAL | E4.01 | ENLARGED ELECTRICAL ROOMS |
| 07-ELECTRICAL | E6.01 | ELECTRICAL - UNIT PLANS |
| 07-ELECTRICAL | E6.02 | ELECTRICAL - UNIT PLANS |

## _MASTER SHEET LIST

| Discipline | Sheet Number | Sheet Name |
|---|---|---|
| 09-PLUMBING | P2.06D | PLUMBING - THIRD FLOOR PLAN D |
| 09-PLUMBING | P2.06E | PLUMBING - THIRD FLOOR PLAN E |
| 09-PLUMBING | P2.07 | PLUMBING - FOURTH FLOOR OVERALL PLAN |
| 09-PLUMBING | P2.07A | PLUMBING - FOURTH FLOOR PLAN A |
| 09-PLUMBING | P2.07B | PLUMBING - FOURTH FLOOR PLAN B |
| 09-PLUMBING | P2.07C | PLUMBING - FOURTH FLOOR PLAN C |
| 09-PLUMBING | P2.07D | PLUMBING - FOURTH FLOOR PLAN D |
| 09-PLUMBING | P2.07E | PLUMBING - FOURTH FLOOR PLAN E |
| 09-PLUMBING | P2.08 | PLUMBING - ROOF PLAN A |
| 09-PLUMBING | P2.08B | PLUMBING - ROOF PLAN B |
| 09-PLUMBING | P2.08C | PLUMBING - ROOF PLAN C |
| 09-PLUMBING | P2.08D | PLUMBING - ROOF PLAN D |
| 09-PLUMBING | P2.08E | PLUMBING - ROOF PLAN E |
| 09-PLUMBING | P6.01 | PLUMBING - UNIT PLANS |
| 09-PLUMBING | P6.02 | PLUMBING - UNIT PLANS |
| 09-PLUMBING | P6.03 | PLUMBING - UNIT PLANS |
| 09-PLUMBING | P6.04 | PLUMBING - UNIT PLANS |
| 09-PLUMBING | P6.05 | PLUMBING - UNIT PLANS |
| 09-PLUMBING | P6.06 | PLUMBING - UNIT PLANS |
| 10-FIRE PROTECTION | FP0.01 | FIRE PROTECTION CONVER SHEET |
| 10-FIRE PROTECTION | FP0.31 | FIRE PROTECTION DETAILS |
| 10-FIRE PROTECTION | FP2.01A | FIRE PROTECTION - RETAIL LEVEL PLAN A |
| 10-FIRE PROTECTION | FP2.01B | FIRE PROTECTION - RETAIL LEVEL PLAN B |
| 10-FIRE PROTECTION | FP2.02A | FIRE PROTECTION - CLUB LEVEL 1 PLAN A |
| 10-FIRE PROTECTION | FP2.02B | FIRE PROTECTION - CLUB LEVEL 1 PLAN B |
| 10-FIRE PROTECTION | FP2.02E | FIRE PROTECTION - CLUB LEVEL 1 PLAN E |
| 10-FIRE PROTECTION | FP2.03A | FIRE PROTECTION - CLUB LEVEL 2 PLAN A |
| 10-FIRE PROTECTION | FP2.03B | FIRE PROTECTION - CLUB LEVEL 2 PLAN B |
| 10-FIRE PROTECTION | FP2.03C | FIRE PROTECTION - CLUB LEVEL 2 PLAN C |
| 10-FIRE PROTECTION | FP2.03D | FIRE PROTECTION - CLUB LEVEL 2 PLAN D |
| 10-FIRE PROTECTION | FP2.03E | FIRE PROTECTION - CLUB LEVEL 2 PLAN E |
| 10-FIRE PROTECTION | FP2.04 | FIRE PROTECTION - FIRST FLOOR PLAN |
| 10-FIRE PROTECTION | FP2.04A | FIRE PROTECTION - FIRST FLOOR PLAN A |
| 10-FIRE PROTECTION | FP2.04B | FIRE PROTECTION - FIRST FLOOR PLAN B |
| 10-FIRE PROTECTION | FP2.04C | FIRE PROTECTION - FIRST FLOOR PLAN C |
| 10-FIRE PROTECTION | FP2.04D | FIRE PROTECTION - FIRST FLOOR PLAN D |
| 10-FIRE PROTECTION | FP2.04E | FIRE PROTECTION - FIRST FLOOR PLAN E |
| 10-FIRE PROTECTION | FP2.05 | FIRE PROTECTION - SECOND FLOOR PLAN |
| 10-FIRE PROTECTION | FP2.05A | FIRE PROTECTION - SECOND FLOOR PLAN A |
| 10-FIRE PROTECTION | FP2.05B | FIRE PROTECTION - SECOND FLOOR PLAN B |
| 10-FIRE PROTECTION | FP2.05C | FIRE PROTECTION - SECOND FLOOR PLAN C |
| 10-FIRE PROTECTION | FP2.05D | FIRE PROTECTION - SECOND FLOOR PLAN D |
| 10-FIRE PROTECTION | FP2.05E | FIRE PROTECTION - SECOND FLOOR PLAN E |
| 10-FIRE PROTECTION | FP2.05F | FIRE PROTECTION - SECOND FLOOR PLAN E |
| 10-FIRE PROTECTION | FP2.06 | FIRE PROTECTION - THIRD FLOOR OVERALL PLAN |
| 10-FIRE PROTECTION | FP2.06A | FIRE PROTECTION - THIRD FLOOR PLAN A |
| 10-FIRE PROTECTION | FP2.06B | FIRE PROTECTION - THIRD FLOOR PLAN B |
| 10-FIRE PROTECTION | FP2.06C | FIRE PROTECTION - THIRD FLOOR PLAN C |
| 10-FIRE PROTECTION | FP2.06D | FIRE PROTECTION - THIRD FLOOR PLAN D |
| 10-FIRE PROTECTION | FP2.06E | FIRE PROTECTION - THIRD FLOOR PLAN E |
| 10-FIRE PROTECTION | FP2.07 | FIRE PROTECTION - FOURTH FLOOR OVERALL PLAN |
| 10-FIRE PROTECTION | FP2.07A | FIRE PROTECTION - FOURTH FLOOR PLAN A |
| 10-FIRE PROTECTION | FP2.07B | FIRE PROTECTION - FOURTH FLOOR PLAN B |
| 10-FIRE PROTECTION | FP2.07C | FIRE PROTECTION - FOURTH FLOOR PLAN C |
| 10-FIRE PROTECTION | FP2.07D | FIRE PROTECTION - FOURTH FLOOR PLAN D |
| 10-FIRE PROTECTION | FP2.07E | FIRE PROTECTION - FOURTH FLOOR PLAN E |
| 10-FIRE PROTECTION | FP2.08 | FIRE PROTECTION - ROOF PLAN A |
| 10-FIRE PROTECTION | FP2.08B | FIRE PROTECTION - ROOF PLAN B |
| 10-FIRE PROTECTION | FP2.08C | FIRE PROTECTION - ROOF PLAN C |
| 10-FIRE PROTECTION | FP2.08D | FIRE PROTECTION - ROOF PLAN D |
| 10-FIRE PROTECTION | FP2.08E | FIRE PROTECTION - ROOF PLAN E |
| 10-FIRE PROTECTION | FP6.01 | FIRE PROTECTION - UNIT PLANS |
| 10-FIRE PROTECTION | FP6.02 | FIRE PROTECTION - UNIT PLANS |
| 10-FIRE PROTECTION | FP6.03 | FIRE PROTECTION - UNIT PLANS |
| 10-FIRE PROTECTION | FP6.04 | FIRE PROTECTION - UNIT PLANS |
| 10-FIRE PROTECTION | FP6.05 | FIRE PROTECTION - UNIT PLANS |
| 10-FIRE PROTECTION | FP6.06 | FIRE PROTECTION - UNIT PLANS |
| 10-FIRE PROTECTION | GFP0.01 | FIRE PROTECTION COVER SHEET |
| 10-FIRE PROTECTION | GFP0.11 | FIRE PROTECTION RISER DIAGRAM |
| 10-FIRE PROTECTION | GFP2.02 | FIRE PROTECTION - LEVEL 0 (CLUB LEVEL) PLAN |
| 10-FIRE PROTECTION | GFP2.04 | FIRE PROTECTION - FIRST FLOOR PLAN |
| 10-FIRE PROTECTION | GFP2.05 | FIRE PROTECTION - SECOND FLOOR PLAN |
| 10-FIRE PROTECTION | GFP2.06 | FIRE PROTECTION - THIRD FLOOR PLAN |
| 10-FIRE PROTECTION | GFP2.07 | FIRE PROTECTION - FOURTH FLOOR PLAN |
| 11-FIRE ALARM | FA0.01 | FIRE ALARM LEGENDS, ABBREVIATIONS, AND GENERAL NOTES |
| 11-FIRE ALARM | FA0.31 | FIRE ALARM DETAILS |
| 11-FIRE ALARM | FA2.01A | FIRE ALARM - RETAIL LEVEL PLAN A |
| 11-FIRE ALARM | FA2.02B | FIRE ALARM - CLUB LEVEL 1 PLAN B |
| 11-FIRE ALARM | FA2.02E | FIRE ALARM - CLUB LEVEL 1 PLAN E |
| 11-FIRE ALARM | FA2.03B | FIRE ALARM - CLUB LEVEL 2 PLAN B |
| 11-FIRE ALARM | FA2.04 | FIRE ALARM - FIRST FLOOR PLAN |
| 11-FIRE ALARM | FA2.04A | FIRE ALARM - FIRST FLOOR PLAN A |
| 11-FIRE ALARM | FA2.04B | FIRE ALARM - FIRST FLOOR PLAN B |
| 11-FIRE ALARM | FA2.04C | FIRE ALARM - FIRST FLOOR PLAN C |
| 11-FIRE ALARM | FA2.04D | FIRE ALARM - FIRST FLOOR PLAN D |
| 11-FIRE ALARM | FA2.04E | FIRE ALARM - FIRST FLOOR PLAN E |
| 11-FIRE ALARM | FA2.05 | FIRE ALARM - SECOND FLOOR PLAN |
| 11-FIRE ALARM | FA2.05A | FIRE ALARM - SECOND FLOOR PLAN A |
| 11-FIRE ALARM | FA2.05B | FIRE ALARM - SECOND FLOOR PLAN B |
| 11-FIRE ALARM | FA2.05C | FIRE ALARM - SECOND FLOOR PLAN C |
| 11-FIRE ALARM | FA2.05D | FIRE ALARM - SECOND FLOOR PLAN D |
| 11-FIRE ALARM | FA2.05E | FIRE ALARM - SECOND FLOOR PLAN E |
| 11-FIRE ALARM | FA2.06 | FIRE ALARM - THIRD FLOOR OVERALL PLAN |
| 11-FIRE ALARM | FA2.06A | FIRE ALARM - THIRD FLOOR PLAN A |
| 11-FIRE ALARM | FA2.06B | FIRE ALARM - THIRD FLOOR PLAN B |
| 11-FIRE ALARM | FA2.06C | FIRE ALARM - THIRD FLOOR PLAN C |
| 11-FIRE ALARM | FA2.06D | FIRE ALARM - THIRD FLOOR PLAN D |
| 11-FIRE ALARM | FA2.06E | FIRE ALARM - THIRD FLOOR PLAN E |
| 11-FIRE ALARM | FA2.07 | FIRE ALARM - FOURTH FLOOR OVERALL PLAN |
| 11-FIRE ALARM | FA2.07A | FIRE ALARM - FOURTH FLOOR PLAN A |
| 11-FIRE ALARM | FA2.07B | FIRE ALARM - FOURTH FLOOR PLAN B |
| 11-FIRE ALARM | FA2.07C | FIRE ALARM - FOURTH FLOOR PLAN C |
| 11-FIRE ALARM | FA2.07D | FIRE ALARM - FOURTH FLOOR PLAN D |
| 11-FIRE ALARM | FA2.07E | FIRE ALARM - FOURTH FLOOR PLAN E |
| 11-FIRE ALARM | FA6.01 | FIRE ALARM - UNIT PLANS |
| 11-FIRE ALARM | FA6.02 | FIRE ALARM - UNIT PLANS |
| 11-FIRE ALARM | FA6.03 | FIRE ALARM - UNIT PLANS |
| 11-FIRE ALARM | FA6.04 | FIRE ALARM - UNIT PLANS |
| 11-FIRE ALARM | FA6.05 | FIRE ALARM - UNIT PLANS |
| 11-FIRE ALARM | FA6.06 | FIRE ALARM - UNIT PLANS |
| 11-FIRE ALARM | GFA0.01 | FIRE ALARM LEGENDS, ABBREVIATIONS, AND GENERAL NOTES |
| 11-FIRE ALARM | GFA0.31 | FIRE ALARM DETAILS |
| 11-FIRE ALARM | GFA2.02 | FIRE ALARM - PARKING LEVEL 0 (CLUB LEVEL) FLOOR PLAN |
| 11-FIRE ALARM | GFA2.04 | FIRE ALARM - PARKING LEVEL 1 FLOOR PLAN |
| 11-FIRE ALARM | GFA2.05 | FIRE ALARM - PARKING LEVEL2 FLOOR PLAN |
| 11-FIRE ALARM | GFA2.06 | FIRE ALARM - PARKING LEVEL 3 FLOOR PLAN |
| 11-FIRE ALARM | GFA2.07 | FIRE ALARM - PARKING LEVEL 4 FLOOR PLAN |

## _MASTER SHEET LIST

| Discipline | Sheet Number | Sheet Name |
|---|---|---|
| 07-ELECTRICAL | E6.03 | ELECTRICAL - UNIT PLANS |
| 07-ELECTRICAL | E6.04 | ELECTRICAL - UNIT PLANS |
| 07-ELECTRICAL | E6.05 | ELECTRICAL - UNIT PLANS |
| 07-ELECTRICAL | E6.06 | ELECTRICAL - UNIT PLANS |
| 07-ELECTRICAL | GE0.01 | ELECTRICAL TITLE SHEET |
| 07-ELECTRICAL | GE0.02 | ELECTRICAL LEGENDS AND ABBREVIATIONS |
| 07-ELECTRICAL | GE0.11 | ELECTRICAL SINGLE LINE DIAGRAM |
| 07-ELECTRICAL | GE0.21 | ELECTRICAL SCHEDULES |
| 07-ELECTRICAL | GE0.31 | ELECTRICAL DETAILS |
| 07-ELECTRICAL | GE2.02 | ELECTRICAL - PARKING LEVEL 0 (CLUB LEVEL) POWER PLAN |
| 07-ELECTRICAL | GE2.04 | ELECTRICAL - PARKING LEVEL 1 POWER PLAN |
| 07-ELECTRICAL | GE2.05 | ELECTRICAL - PARKING LEVEL 2 POWER PLAN |
| 07-ELECTRICAL |

ALL REPORTS, PLANS, SPECIFICATIONS AND COMPUTER FILES RELATING TO THIS PROJECT ARE THE PROPERTY OF THE MARTIN ARCHITECTURAL GROUP. THE MARTIN ARCHITECTURAL GROUP RETAINS ALL COMMON LAW, STATUTE AND OTHER RESERVED RIGHTS INCLUDING THE COPY-RIGHT THERETO. REPRODUCTION OF THE MATERIAL HEREIN OR SUBSTANTIAL USE WITHOUT WRITTEN PERMISSION OF THE MARTIN ARCHITECTURAL GROUP VIOLATES THE COPYRIGHT LAWS OF THE UNITED STATES AND WILL BE SUBJECT TO LEGAL PROSECUTION.
©2022, The Martin Architectural Group, P.C.

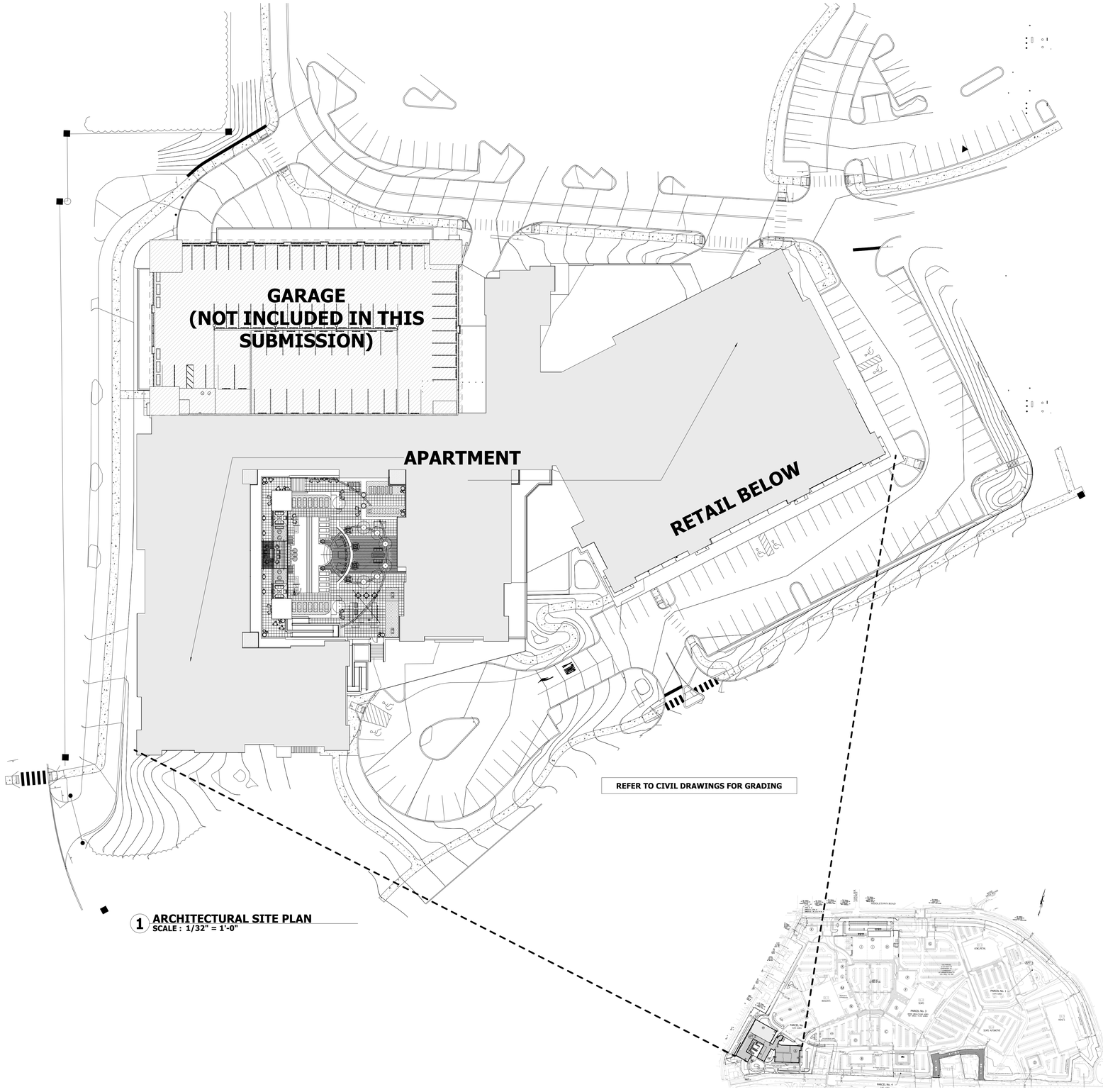


**1 ARCHITECTURAL SITE PLAN**
SCALE : 1/32" = 1'-0"



**KEY PLAN**

THE MARTIN ARCHITECTURAL GROUP, P.C.
ARCHITECTS AND LAND PLANNERS
A PROFESSIONAL CORPORATION
240 NORTH 22ND STREET, PHILADELPHIA, PA, 19103
P (215) 665-1600 F (215) 561-5064

| | |
|---|---|
| P.A.: | DREW ROMANIC |
| P.M.: | JASON DECAMPLI |
| DRAWN BY: | Author |
| PROJECT NO: | 1362-12 |

| NO. | REVISION | DATE |
|---|---|---|
| 1 | PERMIT SET | 12/20/22 |

ARCHITECTURAL SITE PLAN

**Granite Run Apartment 02**

MIDDLETOWN TOWNSHIP, PA

SCALE:

DATE: 10/19/22

**A0.03**

©2022, The Martin Architectural Group, P.C.

Printed: 1/13/2023 4:18:20 PM

| FIRE AREA SCHEDULE | |
|---|---|
| Name | Area |
| FIRE AREA 1 | 13,865 SF |
| FIRE AREA 2 | 8,925 SF |
| FIRE AREA 3 | 14,450 SF |
| FIRE AREA 4 | 14,070 SF |
| FIRE AREA 5 | 7,869 SF |
| FIRE AREA 6 | 11,597 SF |
| MAX FIRE AREA | 14,520 SF |

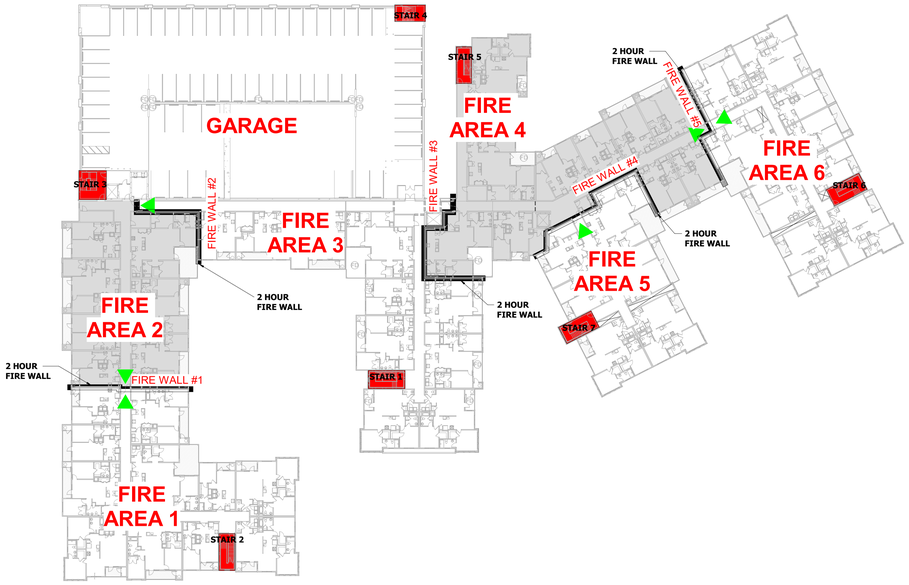


**5 FIRE AREA - SECOND FLOOR**
SCALE : 1" = 40'-0"

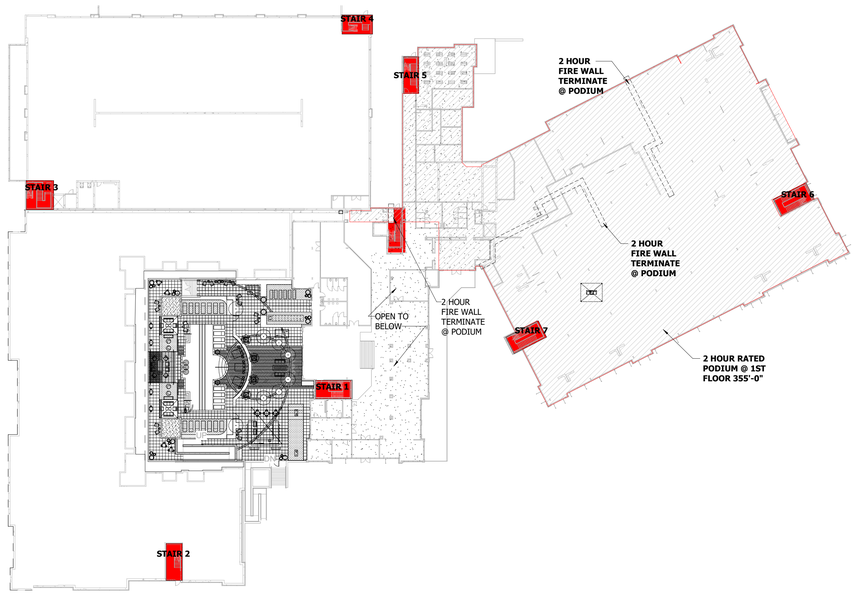


**3 FIRE AREA - CLUB LEVEL 2**
SCALE : 1" = 40'-0"

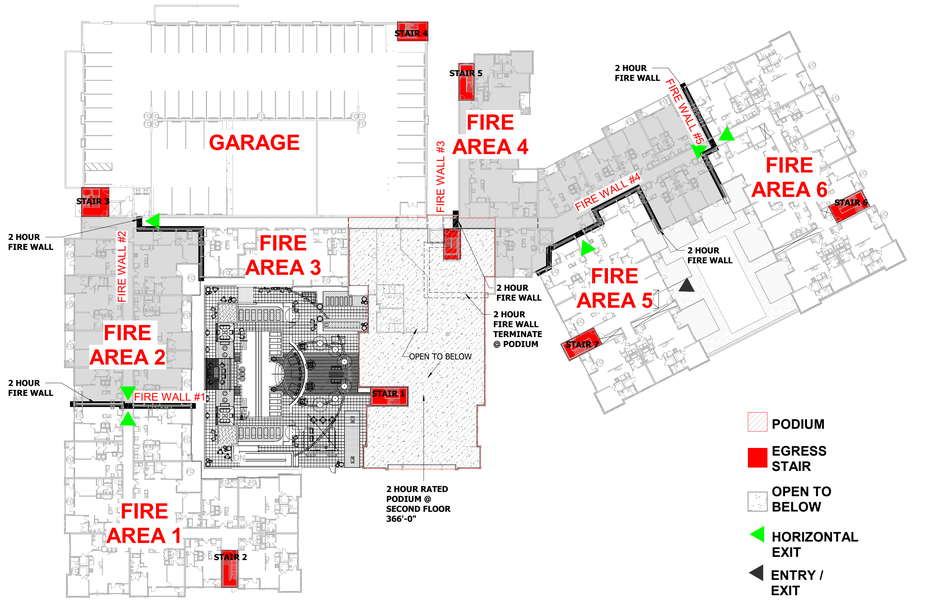


**4 FIRE AREA - FIRST FLOOR**
SCALE : 1" = 40'-0"

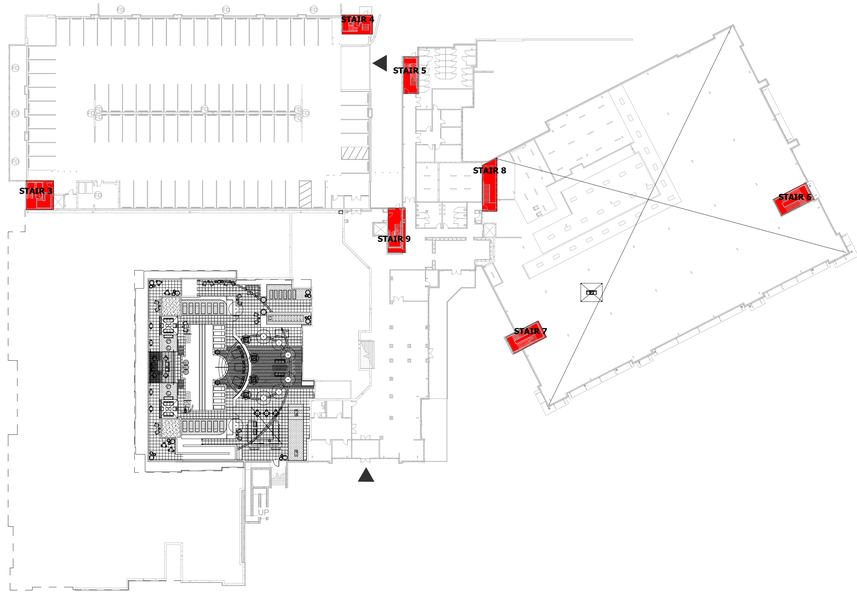


**2 FIRE AREA - CLUB LEVEL 1**
SCALE : 1" = 40'-0"

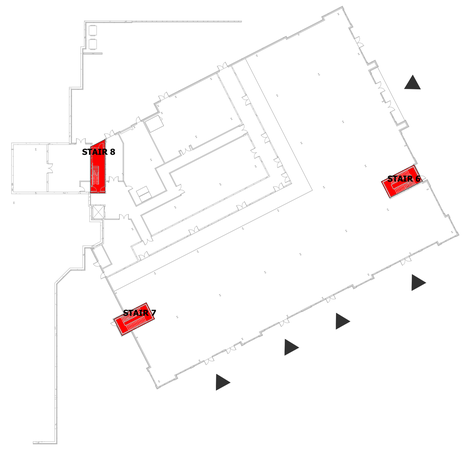


**1 FIRE AREA - RETAIL LEVEL**
SCALE : 1" = 40'-0"

ALL REPORTS, PLANS, SPECIFICATIONS AND COMPUTER FILES RELATING TO THIS PROJECT ARE THE PROPERTY OF THE MARTIN ARCHITECTURAL GROUP. THE MARTIN ARCHITECTURAL GROUP RETAINS ALL COMMON LAW, STATUTE AND OTHER RESERVED RIGHTS INCLUDING THE COPY-RIGHT THERETO. REPRODUCTION OF THE MATERIAL HEREIN OR SUBSTANTIAL USE WITHOUT WRITTEN PERMISSION OF THE MARTIN ARCHITECTURAL GROUP VIOLATES THE COPYRIGHT LAWS OF THE UNITED STATES AND WILL BE SUBJECT TO LEGAL PROSECUTION.
©2022, The Martin Architectural Group, P.C.

NIC

Professi
I hereby prepare this/ laws of

REGISTERED ARCHITECT COMMONWEALTH OF PENNSYLVANIA DREW ROMANIC No. RA-020015

Professi
License Expirati

THE MARTIN ARCHITECTURAL GROUP, P.C.
ARCHITECTS AND LAND PLANNERS
A PROFESSIONAL CORPORATION
240 NORTH 22ND STREET, PHILADELPHIA, PA, 19103
P (215) 665-1680 F (215) 561-5064

| | |
|---|---|
| P.A.: | DREW ROMANIC |
| P.M.: | JASON DECAMPLI |
| DRAWN BY: | Author |
| PROJECT NO: | 1362-12 |

| NO. | REVISION | DATE |
|---|---|---|
| 1 | PERMIT SET | 12/2022 |

FIRE AREAS
**Granite Run Apartment 02**
MIDDLETOWN TOWNSHIP, PA

SCALE:
DATE: 07/26/22

**A0.04**

©2022, The Martin Architectural Group, P.C.

Printed: 1/13/2023 4:19:02 PM

| Area Schedule (Gross Building) | |
|---|---|
| Name | Area |
| Amenity | |
| AMENITY LEVEL 1 | 10,116 SF |
| AMENITY LEVEL 2 | 4,897 SF |
| Back Of House | |
| APARTMENT BOH | 12,009 SF |
| RESIDENT STORAGE | 4,448 SF |
| Garage | |
| GARAGE LEVEL 1 | 28,368 SF |
| GARAGE LEVEL 0 | 28,368 SF |
| GARAGE LEVEL 2 | 28,368 SF |
| GARAGE LEVEL 3 | 28,368 SF |
| GARAGE LEVEL 4 | 28,368 SF |
| Pool Area | |
| POOL AREA | 12,063 SF |
| Residential | |
| RESIDENTIAL LEVEL 1 | 60,159 SF |
| RESIDENTIAL LEVEL 1 | 71,836 SF |
| RESIDENTIAL LEVEL 1 | 71,836 SF |
| RESIDENTIAL LEVEL 1 | 71,836 SF |
| Retail | |
| RETAIL | 23,798 SF |

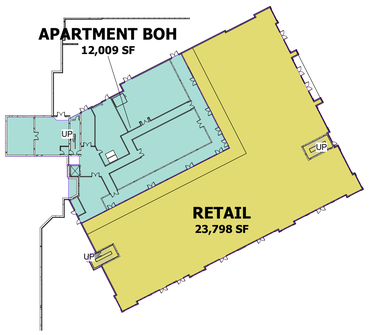


1 RETAIL LEVEL
SCALE : 1" = 50'-0"

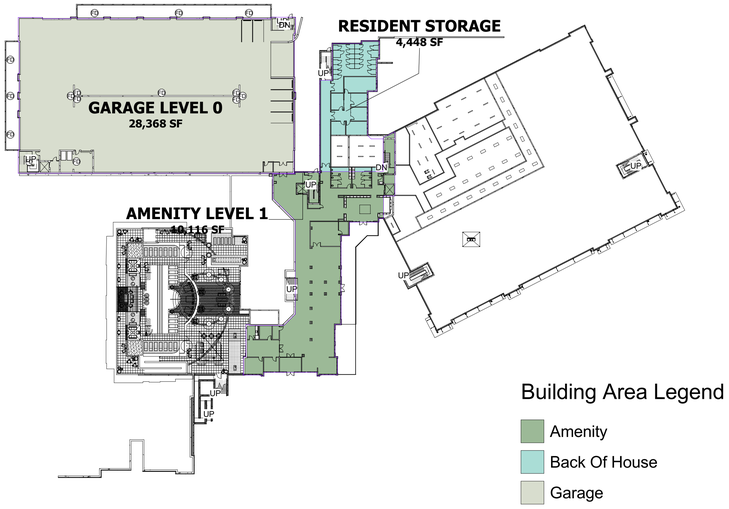


2 CLUB LEVEL 1
SCALE : 1" = 50'-0"

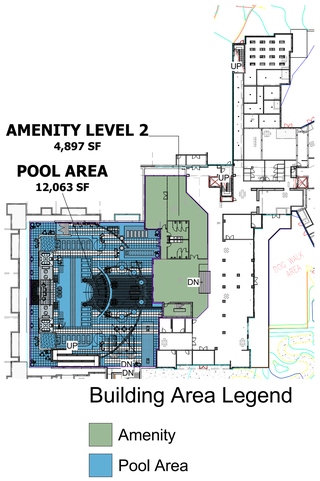


3 CLUB LEVEL 2 RCP
SCALE : 1" = 50'-0"

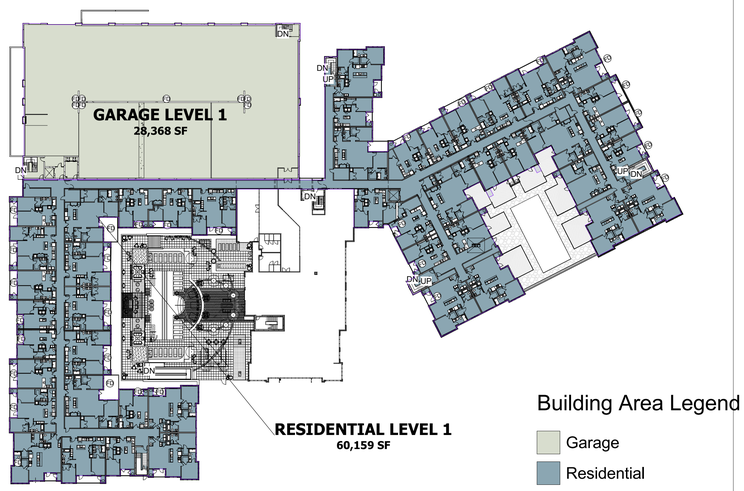


4 FIRST FLOOR RCP
SCALE : 1" = 50'-0"

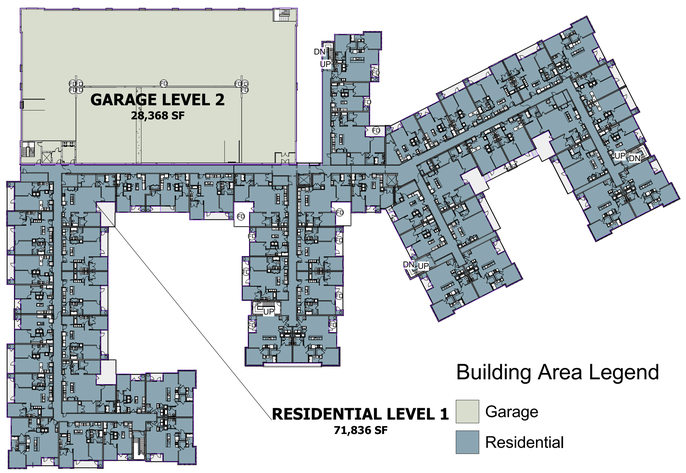


5 SECOND FLOOR RCP
SCALE : 1" = 50'-0"

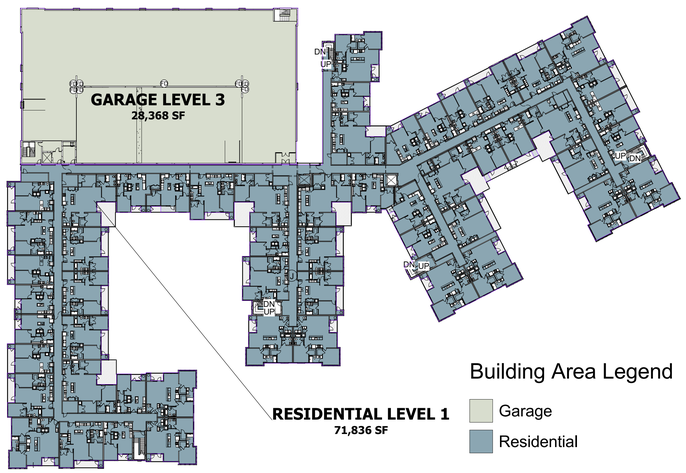


6 THIRD FLOOR
SCALE : 1" = 50'-0"

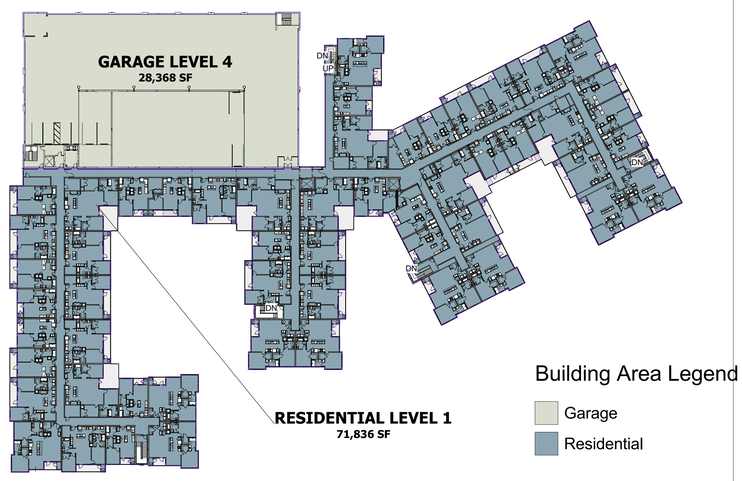


7 FOURTH FLOOR RCP
SCALE : 1" = 50'-0"


ALL REPORTS, PLANS, SPECIFICATIONS AND COMPUTER FILES RELATING TO THIS PROJECT ARE THE PROPERTY OF THE MARTIN ARCHITECTURAL GROUP. THE MARTIN ARCHITECTURAL GROUP RETAINS ALL COMMON LAW, STATUTE AND OTHER RESERVED RIGHTS INCLUDING THE COPYRIGHT THERETO. REPRODUCTION OF THE MATERIAL HEREIN OR SUBSTANTIAL USE WITHOUT WRITTEN PERMISSION OF THE MARTIN ARCHITECTURAL GROUP VIOLATES THE COPYRIGHT LAWS OF THE UNITED STATES AND WILL BE SUBJECT TO LEGAL PROSECUTION.
©2022, The Martin Architectural Group, P.C.






THE MARTIN ARCHITECTURAL GROUP, P.C.
ARCHITECTS AND LAND PLANNERS
A PROFESSIONAL CORPORATION
240 NORTH 22ND STREET, PHILADELPHIA, PA, 19103
P (215) 665-1080 F (215) 561-5064


| | |
|---|---|
| P.A.: | DREW ROMANIC |
| P.M.: | JASON DECAMPLI |
| DRAWN BY: | Author |
| PROJECT NO: | 1362-12 |

| NO. | REVISION | DATE |
|---|---|---|
| 1 | PERMIT SET | 12/20/22 |

AREA PLANS
**Granite Run Apartment 02**
MIDDLETOWN TOWNSHIP, PA

SCALE:
DATE: 09/12/22

**A0.05**

©2022, The Martin Architectural Group, P.C.

Printed: 1/13/2023 4:20:33 PM

## RADON GENERAL NOTES:

* THESE PLANS AND NOTES ARE FOR PLANNING PURPOSES ONLY. CONSULT A RADON SPECIALIST TO CONFIRM NUMBER OF REQUIRED VENTS AND LOCATIONS.

1. RADON MITIGATION AREAS HAVE BEEN SECTIONED OFF INTO SQFT AREAS. THESE CAN BE DIVIDED UP IF NEEDED INTO SMALLER SECTIONS.
2. PROVIDE AN OPEN AIR CONNECTION BETWEEN ALL STAIR TOWERS, ELEVATOR PITS, RAMPS, OR SECTIONED OFF PIECES TO ADJACENT AREAS.
3. RADON SYSTEM WILL BE PASSIVE, HOWEVER, EACH PIPE SHALL BE PREPPED TO HAVE A POWERED FAN INSTALLED SHOULD IT BE DEEMED NECCESARY.
4. THE VENT PIPE RUNS FROM THE PERMEABLE LAYER UP THROUGH THE SLAB AND THE BUILDING AND EXITS ABOVE THE ROOF. DO NOT LEAVE THE VENT PIPE OPEN OR CAPPED AT THE SLAB. USE A MINIMUM 3 DIAMETER PVC PIPE. A 4-INCH DIAMETER PIPE IS BETTER IF THE SYSTEM HAS TO BE ACTIVATED LATER WITH A FAN. THE NUMBER OF VENT PIPES NEEDED DEPENDS ON THE AREA OF THE SUB-SLAB BEING VENTED. IF INTERIOR FOOTINGS DIVIDE THE GAS-PERMEABLE LAYER INTO ISOLATED AREAS, A VENTILATION RISER IS NEEDED FOR EACH AREA. OPENINGS THROUGH THE FOOTINGS SO THE GAS-PERMEABLE LAYERS ARE CONNECTED MAKE IT POSSIBLE FOR A SINGLE VENT PIPE TO AFFECT MUCH LARGER AREAS.

## RADON MITIGATION REQUIREMENTS"

1. A CONTINUOUS VAPOR BARRIER NOT LESS THAN SIX-MIL (.006 INCH, .152 MM) POLYVINYL CHLORIDE OR POLYETHYLENE WITH ANY SEAMS OVERLAPPED NOT LESS THAN 12 INCHES (305 MM), OR OTHER APPROVED MATERIALS, SHALL BE INSTALLED UNDER THE SLAB IN BASEMENT AND SLAB-ON-GRADE CONSTRUCTION AND ON THE SOIL IN CRAWL SPACE CONSTRUCTION.
2. FLOORS OF BASEMENTS AND SLAB-ON-GRADE CONSTRUCTION SHALL BE PLACED OVER A BASE COURSE, NOT LESS THAN FOUR INCHES (102 MM) IN THICKNESS, CONSISTING OF GRAVEL OR CRUSHED STONE CONTAINING NOT MORE THAN 10 PERCENT OF MATERIAL THAT PASS THROUGH A NO. 4 SIEVE.
3. SLABS WITH INTERIOR FOUNDATION PIPE DRAINS INSTALLED SHALL HAVE A SOLID THREE-INCH MINIMUM DIAMETER VENT PIPE SECTION INSTALLED IN CONJUNCTION WITH THIS DRAINAGE SYSTEM WITH TERMINATION BETWEEN SIX AND 12 INCHES ABOVE THE SLAB AND APPROPRIATELY CAPPED OR CONNECTED TO AN INDEPENDENT VENT STACK PIPE TERMINATING AT AN APPROVED LOCATION ON THE EXTERIOR OF THE BUILDING.
4. SLABS WHICH DO NOT HAVE AN INTERIOR FOUNDATION PIPE DRAIN SHALL BE PROVIDED WITH ONE THREE-INCH MINIMUM SOLID VENT PIPE SECTION WITH A "T" PIPE FITTING FOR EVERY ,500 SQUARE FEET, OR PORTION THEREOF, OF SLAB AREA, THIS VENT PIPE SECTION TO BE INSTALLED INTO THE SUB-SLAB AGGREGATE. THE VERTICAL PORTION OF THE "T" PIPE FITTING SHALL TERMINATE BETWEEN SIX AND 12 INCHES ABOVE THE SLAB. THESE FITTINGS SHALL BE CLEARLY LABELED AND APPROPRIATELY CAPPED AND CONNECTED TO AN INDEPENDENT VENT STACK PIPE TERMINATING TO AN APPROVED LOCATION ON THE EXTERIOR OF THE BUILDING.
5. SLABS WITH FRENCH DRAINS OR CHANNEL DRAINS SHALL NOT BE ALLOWED UNLESS INTERIOR FOUNDATION PIPE DRAINS AS DESCRIBED IN THIS SECTION ARE INSTALLED.
6. JOINTS IN FOUNDATION WALLS AND FLOORS, INCLUDING, WITHOUT LIMITATION, CONTROL JOINTS BETWEEN SLAB SECTIONS POURED SEPARATELY, AND BETWEEN FOUNDATION WALL AND FLOOR (EXCEPT FOR FRENCH DRAINS OR CHANNEL DRAINS), AS WELL AS PENETRATIONS OF THE FOUNDATION WALLS AND FLOOR INCLUDING, BUT NOT LIMITED TO, UTILITY PENETRATIONS, SHALL BE SUBSTANTIALLY SEALED BY UTILIZING A NON-CRACKING POLYURETHANE OR SIMILAR CAULK, OR EQUIVALENT, IN ORDER TO CLOSE OFF THE SOIL GAS ENTRY ROUTES. ANY OPENINGS OR PENETRATIONS OF THE FLOOR OVER THE CRAWL SPACE SHALL BE SUBSTANTIALLY SEALED IN ORDER TO CLOSE OFF THE SOIL GAS ENTRY ROUTES.
7. UNTRAPPED FLOOR DRAINS SHALL BE PROVIDED WITH REMOVABLE STOPPERS WHICH SUBSTANTIALLY CLOSE OFF THE SOIL GAS ENTRY ROUTES.
8. A SUMP COVER WHICH SUBSTANTIALLY CLOSES OFF THE SOIL GAS ENTRY ROUTES SHALL BE PROVIDED FOR ALL SUMP INSTALLATIONS. IF FOUNDATION PIPE DRAINS TERMINATE AT A SUMP INSTALLATION AND PROVISIONS ARE MADE FOR VENTING FROM THE SUMP INSTALLATION, THE THREE-INCH DIAMETER SOLID VENT PIPE SECTION REQUIREMENT OF #3 ABOVE NEED NOT BE PROVIDED.
9. ANY DUCTWORK THAT IS ROUTED THROUGH A CRAWL SPACE OR BENEATH A SLAB SHALL BE PROPERLY TAPED OR SEALED.
10. SEALANT MATERIALS THAT SUBSTANTIALLY CLOSE OFF THE SOIL GAS ENTRY ROUTES SHALL BE INSTALLED ON ANY DOORS OR OTHER OPENINGS BETWEEN BASEMENTS AND ADJOINING CRAWL SPACES THAT ARE VENTED TO THE EXTERIOR.
11. THE TOPS OF FOUNDATION WALLS, INCLUDING, WITHOUT LIMITATION, INTERIOR LEDGES THAT ARE CONSTRUCTED OF HOLLOW MASONRY UNITS SHALL BE CAPPED OR THE VOIDS SHALL BE COMPLETELY FILLED.
12. WHEN CAPPED INTERIOR VENT PIPE SECTIONS ARE PROVIDED, OR VENTING FROM THE SUMP INSTALLATION IS PROVIDED, IN ACCORDANCE WITH #3, #4, OR #8 ABOVE, AN ADEQUATELY SUPPORTED THREE-INCH MINIMUM DIAMETER SOLID VENT PIPE SHALL BE INSTALLED FROM A POINT THAT IS WITHIN 10 FEET OF THE CAPPED INTERIOR VENT PIPE SECTION OF SUMP INSTALLATION, THROUGH ANY ENCLOSED PORTIONS OF THE BUILDING, TERMINATING AT AN APPROVED LOCATION ON THE EXTERIOR OF THE BUILDING. THIS VENT PIPE SHALL BE CLEARLY LABELED AND SHALL MEET THE TERMINATION REQUIREMENTS OF SECTION 12.4 OF THE PLUMBING SUBCODE. JOINTS AND CONNECTIONS IN THE VENT PIPE SHALL BE GAS TIGHT. UNUSED OPENINGS SHALL BE CLOSED OR CAPPED.
13. USE SCHEDULE 40 DWV FOR STRENGTH
14. KEEP THE VENT SUPPORTED EVERY 8' VERTICALLY & 6' HORIZONTALLY
15. FIRE BARRIERS MUST BE USED WHERE PIPE PENETRATES A FIREWALL
16. FAN MUST BE PLACE OUTSIDE OF THE LIVING SPACE
17. PIPE MUST VENT ABOVE THE ROOF AND BE AT LEAST 10' FROM THE GROUND
18. VENT PIPE MUST BE 10' FROM WINDOWS UNLESS 2' ABOVE A WINDOW
19. THE VENT EXHAUST NEEDS TO BE 12" ABOVE ANY ROOF AREA, BUT NOT NECESSARILY THE PEAK
20. USE A VARMINT GUARD TO KEEP DEBRIS OUT OF THE FAN

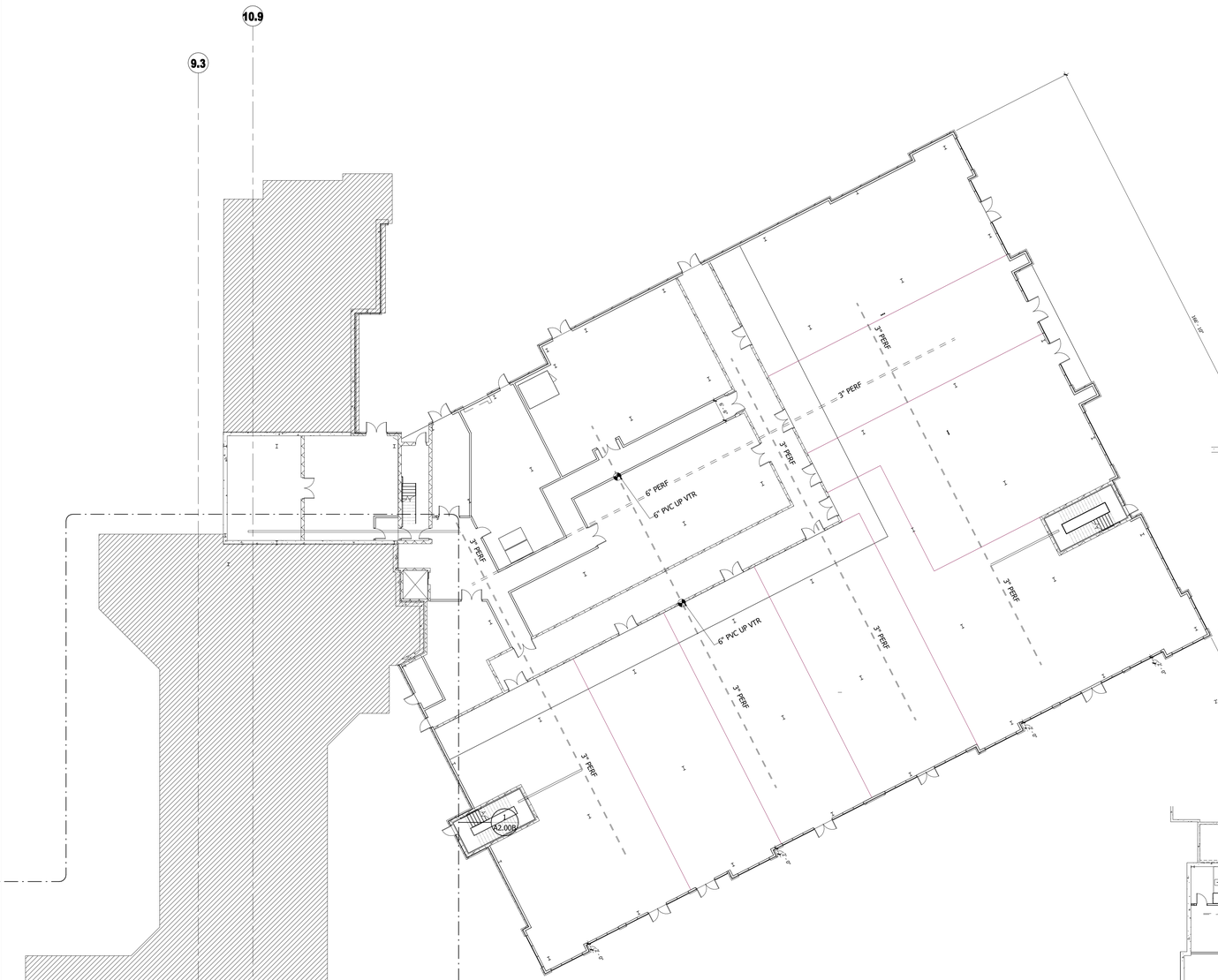


1 **RETAIL LEVEL - RADON MITIGATION PLAN**
SCALE : 1/16" = 1'-0"

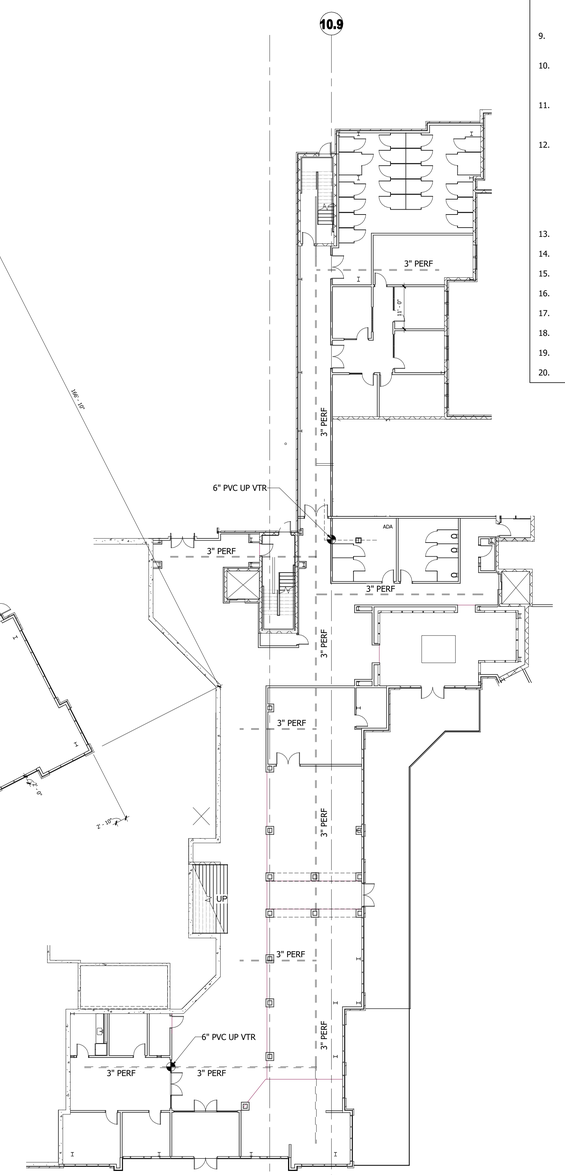


2 **CLUB LEVEL 1 - RADON MITIGATION PLAN**
SCALE : 1/16" = 1'-0"

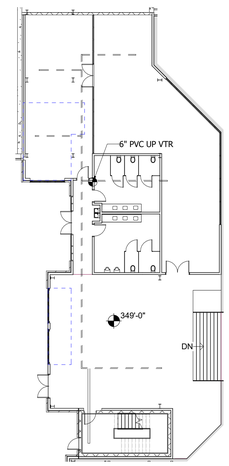


3 **CLUB LEVEL 2 - RADON MITIGATION PLAN**
SCALE : 1/16" = 1'-0"

9.3

ALL REPORTS, PLANS, SPECIFICATIONS AND COMPUTER FILES RELATING TO THIS PROJECT ARE THE PROPERTY OF THE MARTIN ARCHITECTURAL GROUP. THE MARTIN ARCHITECTURAL GROUP RETAINS ALL COMMON LAW, STATUTE AND OTHER RESERVED RIGHTS INCLUDING THE COPY-RIGHT THERETO. REPRODUCTION OF THE MATERIAL HEREIN OR SUBSTANTIAL USE WITHOUT WRITTEN PERMISSION OF THE MARTIN ARCHITECTURAL GROUP VIOLATES THE COPYRIGHT LAWS OF THE UNITED STATES AND WILL BE SUBJECT TO LEGAL PROSECUTION.
©2022, The Martin Architectural Group, P.C.

REGISTERED ARCHITECT COMMONWEALTH OF PENNSYLVANIA DREW ROMANIC No. RA409015

THE MARTIN ARCHITECTURAL GROUP, P.C.
ARCHITECTS AND LAND PLANNERS
A PROFESSIONAL CORPORATION
240 NORTH 22ND STREET, PHILADELPHIA, PA, 19103
P (215) 665-1680 F (215) 561-5064

| | |
|---|---|
| P.A.: | DREW ROMANIC |
| P.M.: | JASON DECAMPLI |
| DRAWN BY: | Author |
| PROJECT NO: | 1362-12 |

| NO. | REVISION | DATE |
|---|---|---|
| 1 | PERMIT SET | 12/20/22 |

RADON MITIGATION PLANS

**Granite Run Apartment 02**

MIDDLETOWN TOWNSHIP, PA

SCALE:
DATE: 12/02/22

**A0.06**

©2022, The Martin Architectural Group, P.C.

Printed: 1/13/2023 4:20:39 PM

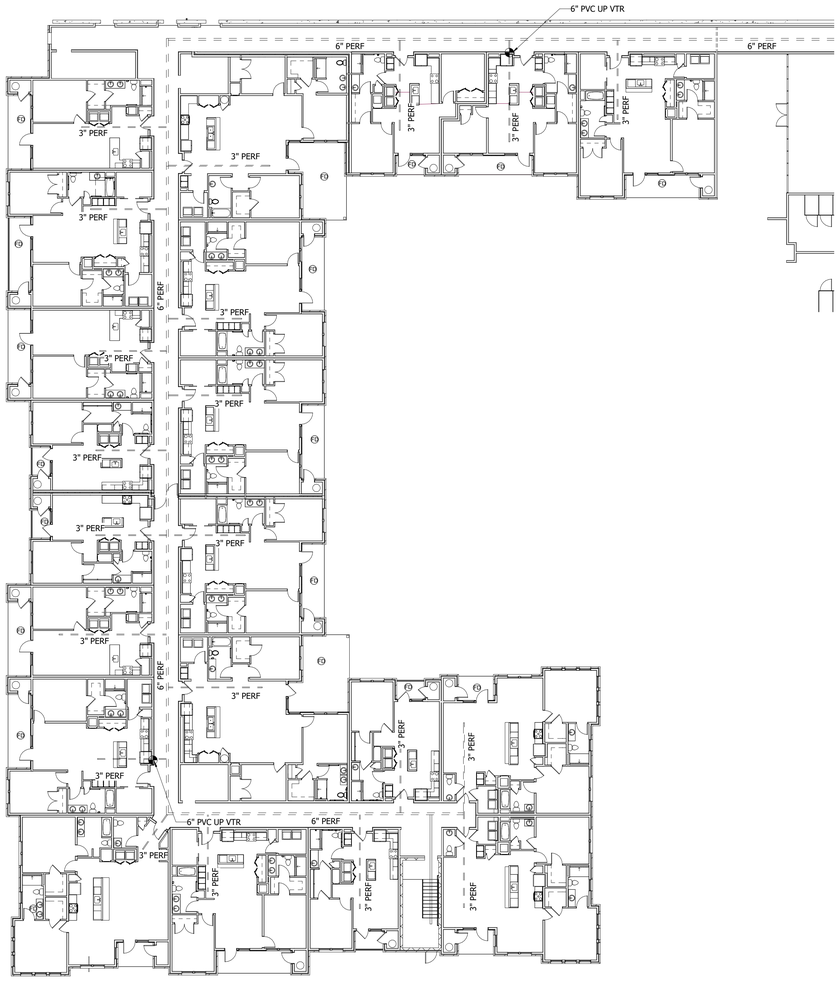
6" PVC UP VTR
6" PERF
3" PERF
6" PERF
6" PERF
3" PERF
3" PERF
3




## LIFESAFETY LEGEND

- ONE HOUR DEMISING WALL
- ONE HOUR INTERIOR BEARING, DWELLING UNIT SEPERATION, OR UNIT/CORRIDOR WALL CONSTRUCTION. (SEE PARTITION SCHEDULE FOR MORE INFO.)
- TWO HOUR EXIT STAIR/ELEVATOR, AREA SEPARATION, OR SHAFT WALL.
- EGRESS PATH
- EXIT SIGN (SEE ELECTRICAL DRAWINGS)
- F.E. — FIRE EXTINGUISHER (SURFACE MOUNTED)
- F.E.C. — FIRE EXTINGUISHER CABINET SEMI - RECESSED
- SMOKE DETECTOR (SEE ELECTRICAL DRAWINGS)
- S — STANDPIPE AND HOSE (SEE DETAIL 28/A5.06)
- 121 (34"x170) — ANTICIPATED LOAD; EXIT CAPACITY; WIDTH AND CAPACITY

## FIRE EXTINGUISHERS

- ALL EXTINGUISHERS SHALL BE MULTIPLE-USE DRY CHEMICAL EXTINGUISHERS, CONTAINING AMMONIUM PHOSPHATE BASE AGENT.
- ALL FIRE EXTINGUISHERS SHALL BE IN COMPLIANCE WITH 2003 NFPA 10 (STANDARD FOR PORTABLE FIRE EXTINGUISHERS).
- GENERAL FIRE EXTINGUISHERS PROVIDE 2A: 20 - B.C.
- PROVIDE CANE DETECTION AT ALL STANDPIPE LOCATIONS WHERE IT PROTRUDES MORE THAN 4" INTO WALKABLE CLEAR FLOOR SPACE.

**1 LIFESAFETY PLAN - RETAIL LEVEL**
SCALE : 1/16" = 1'-0"


ALL REPORTS, PLANS, SPECIFICATIONS AND COMPUTER FILES RELATING TO THIS PROJECT ARE THE PROPERTY OF THE MARTIN ARCHITECTURAL GROUP. THE MARTIN ARCHITECTURAL GROUP RETAINS ALL COMMON LAW, STATUTE AND OTHER RESERVED RIGHTS INCLUDING THE COPYRIGHT THERETO. REPRODUCTION OF THE MATERIAL HEREIN OR SUBSTANTIAL USE WITHOUT WRITTEN PERMISSION OF THE MARTIN ARCHITECTURAL GROUP VIOLATES THE COPYRIGHT LAWS OF THE UNITED STATES AND WILL BE SUBJECT TO LEGAL PROSECUTION.
©2022, The Martin Architectural Group, P.C.



THE MARTIN ARCHITECTURAL GROUP, P.C.
ARCHITECTS AND LAND PLANNERS
A PROFESSIONAL CORPORATION
240 NORTH 22ND STREET, PHILADELPHIA, PA, 19103
P (215) 665-1080 F (215) 561-5064


| | |
|---|---|
| P.A.: | DREW ROMANIC |
| P.M.: | JASON DECAMPLI |
| DRAWN BY: | MAG |
| PROJECT NO: | 1362-12 |

| NO. | REVISION | DATE |
|---|---|---|
| 1 | PERMIT SET | 12/20/22 |

# LIFE SAFETY PLAN - RETAIL LEVEL
## Granite Run Apartment 02

MIDDLETOWN TOWNSHIP, PA

| | |
|---|---|
| SCALE: | AS NOTED |
| DATE: | 12/31/2017 |

# A1.01


©2022, The Martin Architectural Group, P.C.


Printed: 1/13/2023 4:20:48 PM

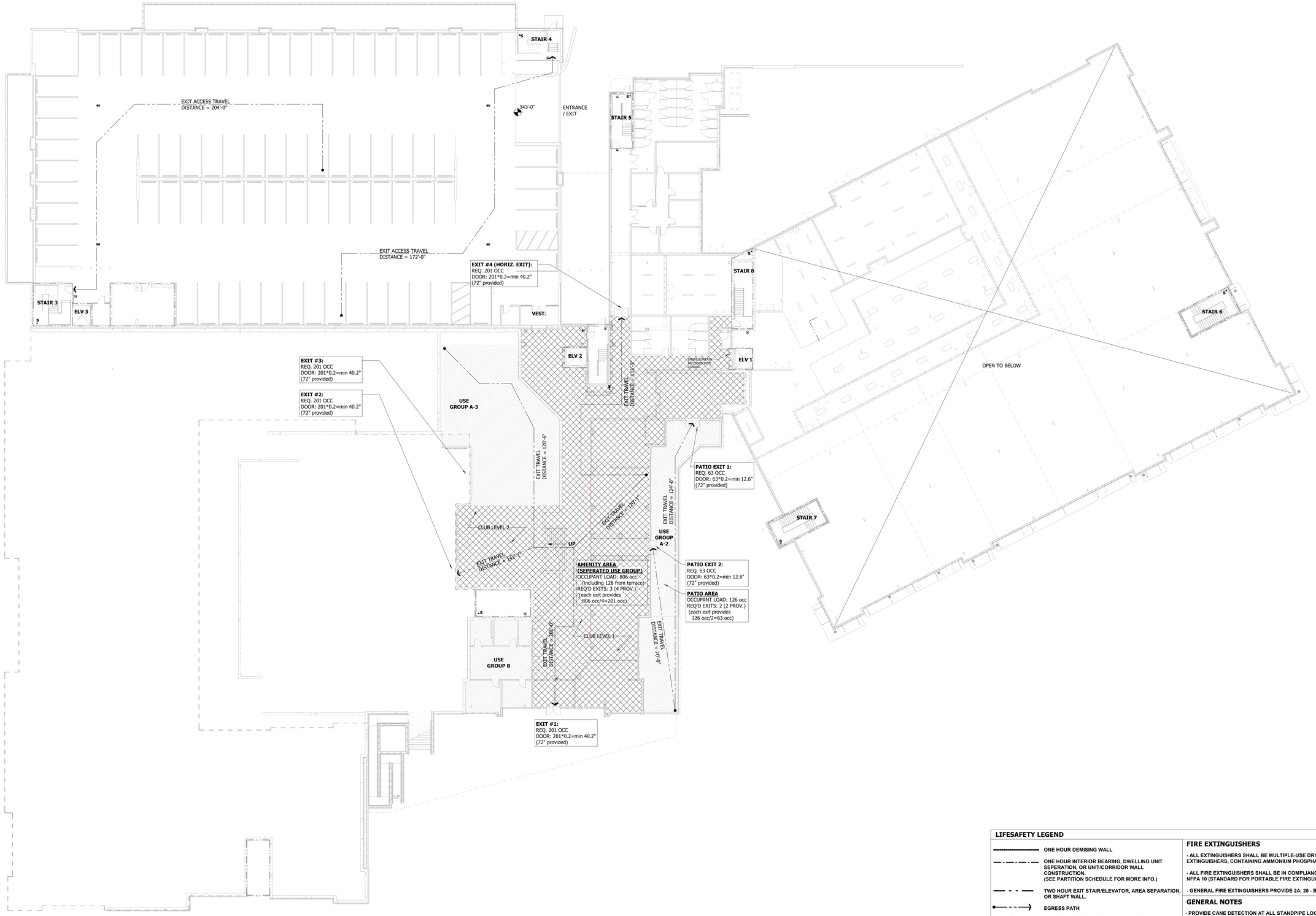


## 1 LIFESAFETY PLAN - CLUB LEVEL 1

SCALE : 1/16" = 1'-0"

### LIFESAFETY LEGEND

- ONE HOUR DEMISING WALL
- ONE HOUR INTERIOR BEARING, DWELLING UNIT SEPERATION, OR UNIT/CORRIDOR WALL CONSTRUCTION. (SEE PARTITION SCHEDULE FOR MORE INFO.)
- TWO HOUR EXIT STAIR/ELEVATOR, AREA SEPARATION, OR SHAFT WALL.
- EGRESS PATH
- EXIT SIGN (SEE ELECTRICAL DRAWINGS)
- F.E. FIRE EXTINGUISHER (SURFACE MOUNTED)
- F.E.C. FIRE EXTINGUISHER CABINET SEMI - RECESSED
- SMOKE DETECTOR (SEE ELECTRICAL DRAWINGS)
- S STANDPIPE AND HOSE (SEE PLUMBING DRAWINGS)

### FIRE EXTINGUISHERS

- ALL EXTINGUISHERS SHALL BE MULTIPLE-USE DRY CHEMICAL EXTINGUISHERS, CONTAINING AMMONIUM PHOSPHATE BASE AGENT.
- ALL FIRE EXTINGUISHERS SHALL BE IN COMPLIANCE WITH CURRENT NFPA 10 (STANDARD FOR PORTABLE FIRE EXTINGUISHERS).
- GENERAL FIRE EXTINGUISHERS PROVIDE 2A: 20 - B.C.

### GENERAL NOTES

- PROVIDE CANE DETECTION AT ALL STANDPIPE LOCATIONS WHERE IT PROTRUDES MORE THAN 4" INTO WALKABLE CLEAR FLOOR SPACE.

### NOMENCLATURE

121 / 34"x170 — ANTICIPATED LOAD; EXIT CAPACITY; WIDTH AND CAPACITY

ALL REPORTS, PLANS, SPECIFICATIONS AND COMPUTER FILES RELATING TO THIS PROJECT ARE THE PROPERTY OF THE MARTIN ARCHITECTURAL GROUP. THE MARTIN ARCHITECTURAL GROUP RETAINS ALL COMMON LAW, STATUTE AND OTHER RESERVED RIGHTS INCLUDING THE COPYRIGHT THERETO. REPRODUCTION OF THE MATERIAL HEREIN OR SUBSTANTIAL USE WITHOUT WRITTEN PERMISSION OF THE MARTIN ARCHITECTURAL GROUP VIOLATES THE COPYRIGHT LAWS OF THE UNITED STATES AND WILL BE SUBJECT TO LEGAL PROSECUTION.
©2022, The Martin Architectural Group, P.C.

THE MARTIN ARCHITECTURAL GROUP, P.C.
ARCHITECTS AND LAND PLANNERS
A PROFESSIONAL CORPORATION
240 NORTH 22ND STREET, PHILADELPHIA, PA, 19103
P (215) 665-1080 F (215) 561-5064

| | |
|---|---|
| P.A.: | DREW ROMANIC |
| P.M.: | JASON DECAMPLI |
| DRAWN BY: | Author |
| PROJECT NO: | 1362-12 |

| NO. | REVISION | DATE |
|---|---|---|
| 1 | PERMIT SET | 12/20/22 |

# LIFESAFETY PLAN - CLUB LEVEL 1

## Granite Run Apartment 02

MIDDLETOWN TOWNSHIP, PA

SCALE:
DATE: 07/26/22

# A1.02

©2022, The Martin Architectural Group, P.C.

Printed: 1/13/2023 4:20:53 PM

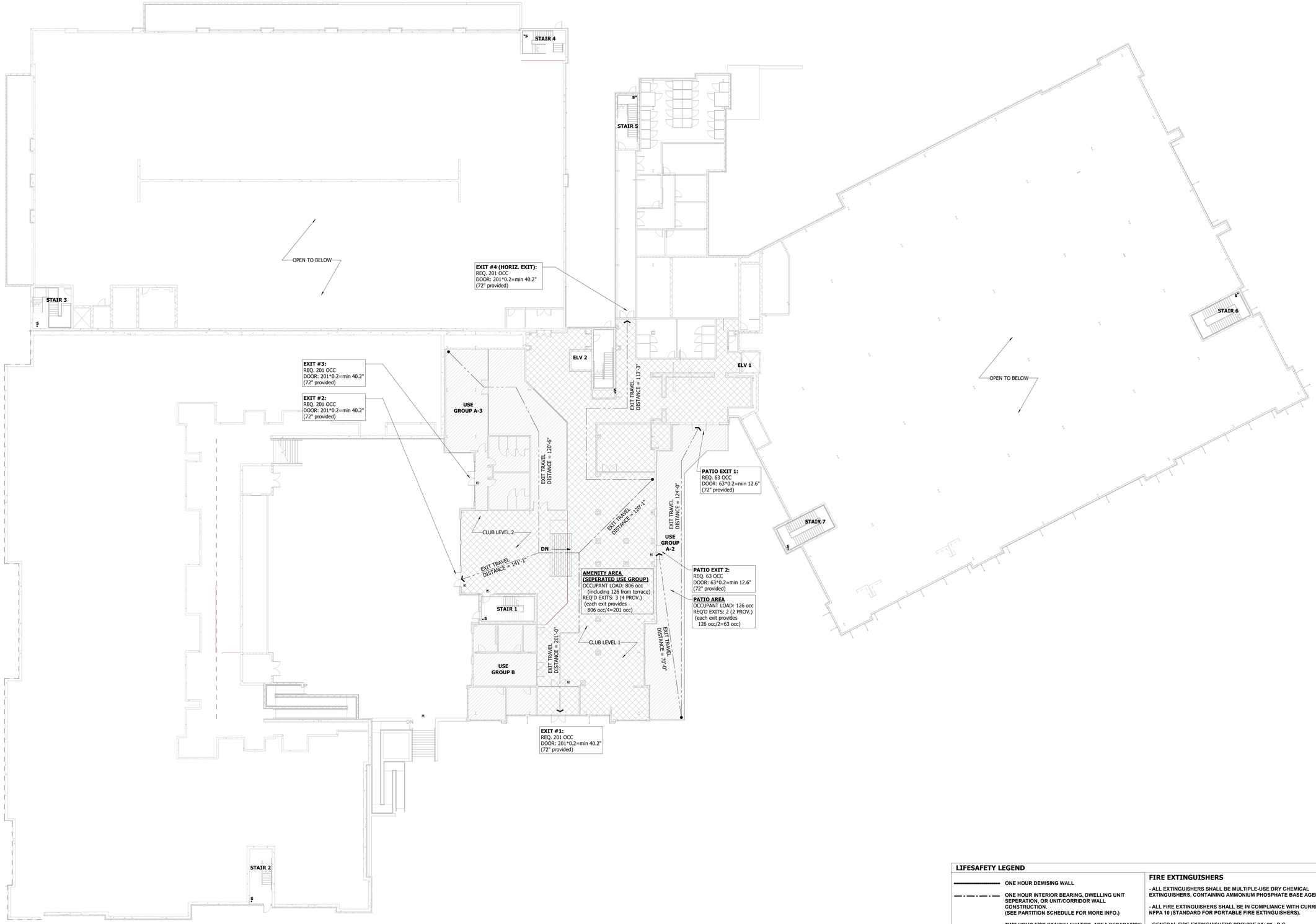


## 1 LIFESAFETY PLAN - CLUB LEVEL 2

SCALE : 1/16" = 1'-0"

### LIFESAFETY LEGEND

| | |
|---|---|
| | ONE HOUR DEMISING WALL |
| | ONE HOUR INTERIOR BEARING, DWELLING UNIT SEPERATION, OR UNIT/CORRIDOR WALL CONSTRUCTION. (SEE PARTITION SCHEDULE FOR MORE INFO.) |
| | TWO HOUR EXIT STAIR/ELEVATOR, AREA SEPARATION, OR SHAFT WALL. |
| | EGRESS PATH |
| | EXIT SIGN (SEE ELECTRICAL DRAWINGS) |
| F.E. | FIRE EXTINGUISHER (SURFACE MOUNTED) |
| F.E.C. | FIRE EXTINGUISHER CABINET SEMI - RECESSED |
| | SMOKE DETECTOR (SEE ELECTRICAL DRAWINGS) |
| S | STANDPIPE AND HOSE (SEE PLUMBING DRAWINGS) |

### FIRE EXTINGUISHERS

- ALL EXTINGUISHERS SHALL BE MULTIPLE-USE DRY CHEMICAL EXTINGUISHERS, CONTAINING AMMONIUM PHOSPHATE BASE AGENT.

- ALL FIRE EXTINGUISHERS SHALL BE IN COMPLIANCE WITH CURRENT NFPA 10 (STANDARD FOR PORTABLE FIRE EXTINGUISHERS).

- GENERAL FIRE EXTINGUISHERS PROVIDE 2A: 20 - B.C.

### GENERAL NOTES

- PROVIDE CANE DETECTION AT ALL STANDPIPE LOCATIONS WHERE IT PROTRUDES MORE THAN 4" INTO WALKABLE CLEAR FLOOR SPACE.

### NOMENCLATURE

121 (34"x170) — ANTICIPATED LOAD; WIDTH AND CAPACITY; EXIT CAPACITY

ALL REPORTS, PLANS, SPECIFICATIONS AND COMPUTER FILES RELATING TO THIS PROJECT ARE THE PROPERTY OF THE MARTIN ARCHITECTURAL GROUP. THE MARTIN ARCHITECTURAL GROUP RETAINS ALL COMMON LAW, STATUTE AND OTHER RESERVED RIGHTS INCLUDING THE COPYRIGHT THERETO. REPRODUCTION OF THE MATERIAL HEREIN OR SUBSTANTIAL USE WITHOUT WRITTEN PERMISSION OF THE MARTIN ARCHITECTURAL GROUP VIOLATES THE COPYRIGHT LAWS OF THE UNITED STATES AND WILL BE SUBJECT TO LEGAL PROSECUTION.
©2022, The Martin Architectural Group, P.C.

REGISTERED ARCHITECT PENNSYLVANIA DREW A. ROMANIC No. RA407676

THE MARTIN ARCHITECTURAL GROUP, P.C.
ARCHITECTS AND LAND PLANNERS
A PROFESSIONAL CORPORATION
240 NORTH 22ND STREET, PHILADELPHIA, PA, 19103
P (215) 665-1080 F (215) 561-5064

| | |
|---|---|
| P.A.: | DREW ROMANIC |
| P.M.: | JASON DECAMPLI |
| DRAWN BY: | Author |
| PROJECT NO: | 1362-12 |

| NO. | REVISION | DATE |
|---|---|---|
| 1 | PERMIT SET | 12/20/22 |

# LIFESAFETY PLAN - CLUB LEVEL 2

## Granite Run Apartment 02

MIDDLETOWN TOWNSHIP, PA

SCALE:

DATE: 07/26/22

# A1.03

©2022, The Martin Architectural Group, P.C.

Printed: 1/13/2023 4:20:57 PM

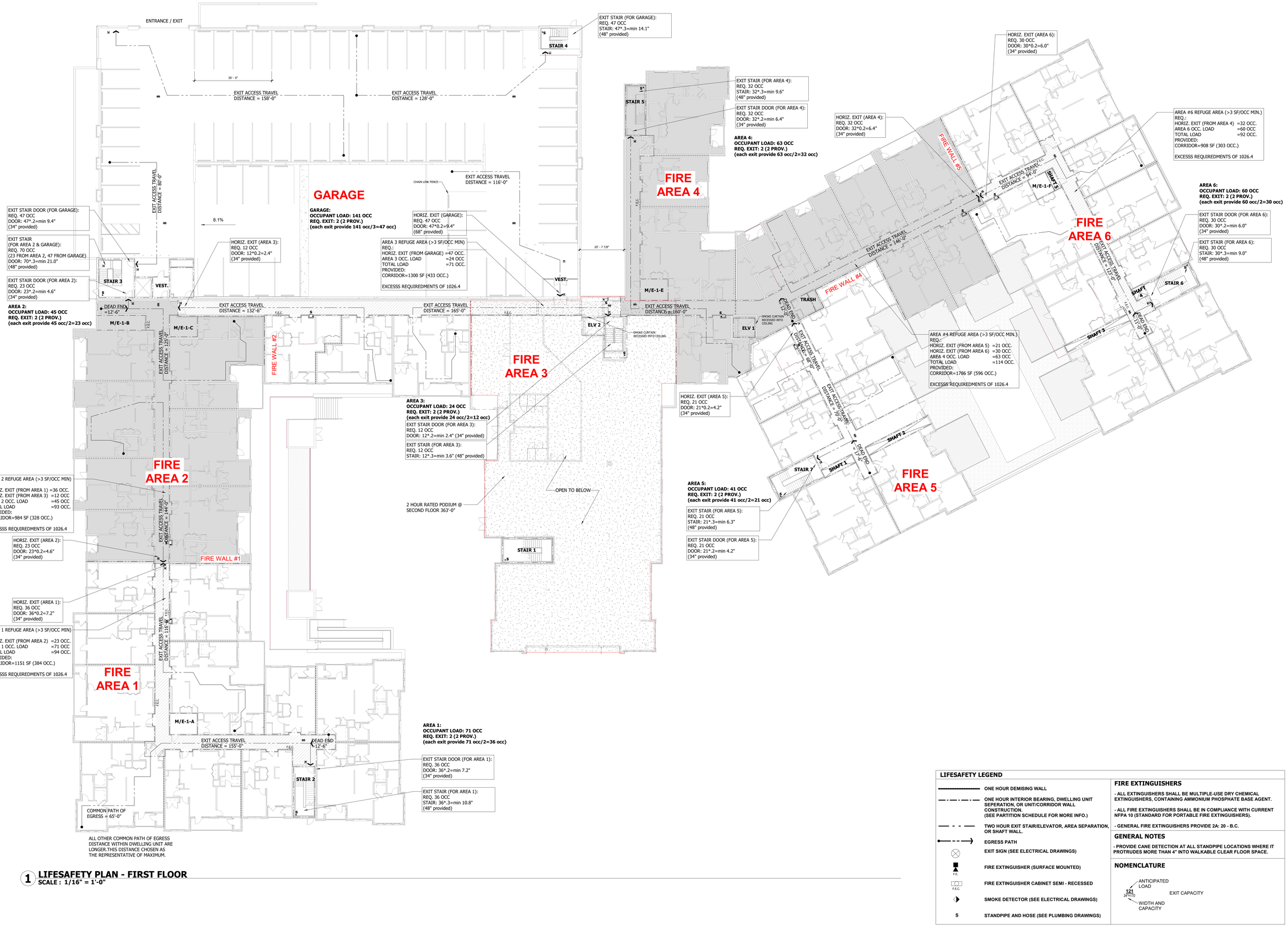


## 1 LIFESAFETY PLAN - FIRST FLOOR
**SCALE : 1/16" = 1'-0"**

### LIFESAFETY LEGEND

| | |
|---|---|
| ONE HOUR DEMISING WALL | |
| ONE HOUR INTERIOR BEARING, DWELLING UNIT SEPERATION, OR UNIT/CORRIDOR WALL CONSTRUCTION. (SEE PARTITION SCHEDULE FOR MORE INFO.) | |
| TWO HOUR EXIT STAIR/ELEVATOR, AREA SEPARATION, OR SHAFT WALL. | |
| EGRESS PATH | |
| EXIT SIGN (SEE ELECTRICAL DRAWINGS) | |
| FIRE EXTINGUISHER (SURFACE MOUNTED) | |
| FIRE EXTINGUISHER CABINET SEMI - RECESSED | |
| SMOKE DETECTOR (SEE ELECTRICAL DRAWINGS) | |
| S — STANDPIPE AND HOSE (SEE PLUMBING DRAWINGS) | |

### FIRE EXTINGUISHERS
- ALL EXTINGUISHERS SHALL BE MULTIPLE-USE DRY CHEMICAL EXTINGUISHERS, CONTAINING AMMONIUM PHOSPHATE BASE AGENT.
- ALL FIRE EXTINGUISHERS SHALL BE IN COMPLIANCE WITH CURRENT NFPA 10 (STANDARD FOR PORTABLE FIRE EXTINGUISHERS).
- GENERAL FIRE EXTINGUISHERS PROVIDE 2A: 20 - B.C.

### GENERAL NOTES
- PROVIDE CANE DETECTION AT ALL STANDPIPE LOCATIONS WHERE IT PROTRUDES MORE THAN 4" INTO WALKABLE CLEAR FLOOR SPACE.

### NOMENCLATURE
121 (ANTICIPATED LOAD) / 347+370 (WIDTH AND CAPACITY) — EXIT CAPACITY

ALL REPORTS, PLANS, SPECIFICATIONS AND COMPUTER FILES RELATING TO THIS PROJECT ARE THE PROPERTY OF THE MARTIN ARCHITECTURAL GROUP. THE MARTIN ARCHITECTURAL GROUP RETAINS ALL COMMON LAW, STATUTE AND OTHER RESERVED RIGHTS INCLUDING THE COPY-RIGHT THERETO. REPRODUCTION OF THE MATERIAL HEREIN OR SUBSTANTIAL USE WITHOUT WRITTEN PERMISSION OF THE MARTIN ARCHITECTURAL GROUP VIOLATES THE COPYRIGHT LAWS OF THE UNITED STATES AND WILL BE SUBJECT TO LEGAL PROSECUTION.
©2022, The Martin Architectural Group, P.C.

REGISTERED ARCHITECT COMMONWEALTH OF PENNSYLVANIA DREW ROMANIC No. RA020915

THE MARTIN ARCHITECTURAL GROUP, P.C.
ARCHITECTS AND LAND PLANNERS
A PROFESSIONAL CORPORATION
240 NORTH 22ND STREET, PHILADELPHIA, PA, 19103
P (215) 665-1600 F (215) 561-5064

| | |
|---|---|
| P.A.: | DREW ROMANIC |
| P.M.: | JASON DECAMPLI |
| DRAWN BY: | Author |
| PROJECT NO: | 1362-12 |

| NO. | REVISION | DATE |
|---|---|---|
| 1 | PERMIT SET | 12/20/22 |

# LIFESAFETY PLAN - 1ST FLOOR
## Granite Run Apartment 02
MIDDLETOWN TOWNSHIP, PA

SCALE:
DATE: 07/26/22

**A1.04**

©2022, The Martin Architectural Group, P.C.

Printed: 1/13/2023 4:21:32 PM

ALL REPORTS, PLANS, SPECIFICATIONS AND COMPUTER FILES RELATING TO THIS PROJECT ARE THE PROPERTY OF THE MARTIN ARCHITECTURAL GROUP. THE MARTIN ARCHITECTURAL GROUP RETAINS ALL COMMON LAW, STATUTE AND OTHER RESERVED RIGHTS INCLUDING THE COPY-RIGHT THERETO. REPRODUCTION OF THE MATERIAL HEREIN OR SUBSTANTIAL USE WITHOUT WRITTEN PERMISSION OF THE MARTIN ARCHITECTURAL GROUP VIOLATES THE COPYRIGHT LAWS OF THE UNITED STATES AND WILL BE SUBJECT TO LEGAL PROSECUTION.
©2022, The Martin Architectural Group, P.C.




## LIFESAFETY LEGEND

- ONE HOUR DEMISING WALL
- ONE HOUR INTERIOR BEARING, DWELLING UNIT SEPERATION, OR UNIT/CORRIDOR WALL CONSTRUCTION. (SEE PARTITION SCHEDULE FOR MORE INFO.)
- TWO HOUR EXIT STAIR/ELEVATOR, AREA SEPARATION, OR SHAFT WALL.
- EGRESS PATH
- EXIT SIGN (SEE ELECTRICAL DRAWINGS)
- F.E. — FIRE EXTINGUISHER (SURFACE MOUNTED)
- F.E.C. — FIRE EXTINGUISHER CABINET SEMI - RECESSED
- SMOKE DETECTOR (SEE ELECTRICAL DRAWINGS)
- S — STANDPIPE AND HOSE (SEE DETAIL 28/A5.06)
- 121 / 34"x70 — ANTICIPATED LOAD / EXIT CAPACITY / WIDTH AND CAPACITY

## FIRE EXTINGUISHERS

- ALL EXTINGUISHERS SHALL BE MULTIPLE-USE DRY CHEMICAL EXTINGUISHERS, CONTAINING AMMONIUM PHOSPHATE BASE AGENT.
- ALL FIRE EXTINGUISHERS SHALL BE IN COMPLIANCE WITH 2003 NFPA 10 (STANDARD FOR PORTABLE FIRE EXTINGUISHERS).
- GENERAL FIRE EXTINGUISHERS PROVIDE 2A: 20 - B.C.
- PROVIDE CANE DETECTION AT ALL STANDPIPE LOCATIONS WHERE IT PROTRUDES MORE THAN 4" INTO WALKABLE CLEAR FLOOR SPACE.

## 1 LIFESAFETY PLAN - SECOND & THIRD FLOOR

SCALE : 1/16" = 1'-0"

REGISTERED ARCHITECT COMMONWEALTH OF PENNSYLVANIA DREW ROMANIC No. RA-020115

THE MARTIN ARCHITECTURAL GROUP, P.C.
ARCHITECTS AND LAND PLANNERS
A PROFESSIONAL CORPORATION
240 NORTH 22ND STREET, PHILADELPHIA, PA, 19103
P (215) 665-1600 F (215) 561-5064

| | |
|---|---|
| P.A.: | DREW ROMANIC |
| P.M.: | JASON DECAMPLI |
| DRAWN BY: | Author |
| PROJECT NO: | 1362-12 |

| NO. | REVISION | DATE |
|---|---|---|
| 1 | PERMIT SET | 12/20/22 |

LIFESAFETY PLAN - 2ND & 3RD FL
**Granite Run Apartment 02**
MIDDLETOWN TOWNSHIP, PA

SCALE:
DATE: 07/26/22

**A1.05**

©2022, The Martin Architectural Group, P.C.

Printed: 1/13/2023 4:21:55 PM

ALL REPORTS, PLANS, SPECIFICATIONS AND COMPUTER FILES RELATING TO THIS PROJECT ARE THE PROPERTY OF THE MARTIN ARCHITECTURAL GROUP. THE MARTIN ARCHITECTURAL GROUP RETAINS ALL COMMON LAW, STATUTE AND OTHER RESERVED RIGHTS INCLUDING THE COPY-RIGHT THERETO. REPRODUCTION OF THE MATERIAL HEREIN OR SUBSTANTIAL USE WITHOUT WRITTEN PERMISSION OF THE MARTIN ARCHITECTURAL GROUP VIOLATES THE COPYRIGHT LAWS OF THE UNITED STATES AND WILL BE SUBJECT TO LEGAL PROSECUTION.
©2022, The Martin Architectural Group, P.C.




## LIFESAFETY LEGEND

- ONE HOUR DEMISING WALL
- ONE HOUR INTERIOR BEARING, DWELLING UNIT SEPERATION, OR UNIT/CORRIDOR WALL CONSTRUCTION. (SEE PARTITION SCHEDULE FOR MORE INFO.)
- TWO HOUR EXIT STAIR/ELEVATOR, AREA SEPARATION, OR SHAFT WALL.
- EGRESS PATH
- EXIT SIGN (SEE ELECTRICAL DRAWINGS)
- F.E. — FIRE EXTINGUISHER (SURFACE MOUNTED)
- F.E.C. — FIRE EXTINGUISHER CABINET SEMI - RECESSED
- SMOKE DETECTOR (SEE ELECTRICAL DRAWINGS)
- S — STANDPIPE AND HOSE (SEE DETAIL 28/A5.06)
- 121 / 34*470 — ANTICIPATED LOAD / EXIT CAPACITY / WIDTH AND CAPACITY

## FIRE EXTINGUISHERS

- ALL EXTINGUISHERS SHALL BE MULTIPLE-USE DRY CHEMICAL EXTINGUISHERS, CONTAINING AMMONIUM PHOSPHATE BASE AGENT.
- ALL FIRE EXTINGUISHERS SHALL BE IN COMPLIANCE WITH 2003 NFPA 10 (STANDARD FOR PORTABLE FIRE EXTINGUISHERS).
- GENERAL FIRE EXTINGUISHERS PROVIDE 2A: 20 - B.C.
- PROVIDE CANE DETECTION AT ALL STANDPIPE LOCATIONS WHERE IT PROTRUDES MORE THAN 4" INTO WALKABLE CLEAR FLOOR SPACE.

1 **LIFESAFETY PLAN - FOURTH FLOOR**
SCALE: 1/16" = 1'-0"

REGISTERED ARCHITECT COMMONWEALTH OF PENNSYLVANIA DREW ROMANIC No. RA-020015

THE MARTIN ARCHITECTURAL GROUP, P.C.
ARCHITECTS AND LAND PLANNERS
A PROFESSIONAL CORPORATION
240 NORTH 22ND STREET, PHILADELPHIA, PA, 19103
P (215) 665-1600 F (215) 561-5064

| | |
|---|---|
| P.A.: | DREW ROMANIC |
| P.M.: | JASON DECAMPLI |
| DRAWN BY: | Author |
| PROJECT NO: | 1362-12 |

| NO. | REVISION | DATE |
|---|---|---|
| 1 | PERMIT SET | 12/20/22 |

LIFESAFETY PLAN - 4TH FLOOR
**Granite Run Apartment 02**
MIDDLETOWN TOWNSHIP, PA

SCALE:
DATE: 07/26/22

**A1.06**

©2022, The Martin Architectural Group, P.C.

Printed: 1/13/2023 4:22:25 PM

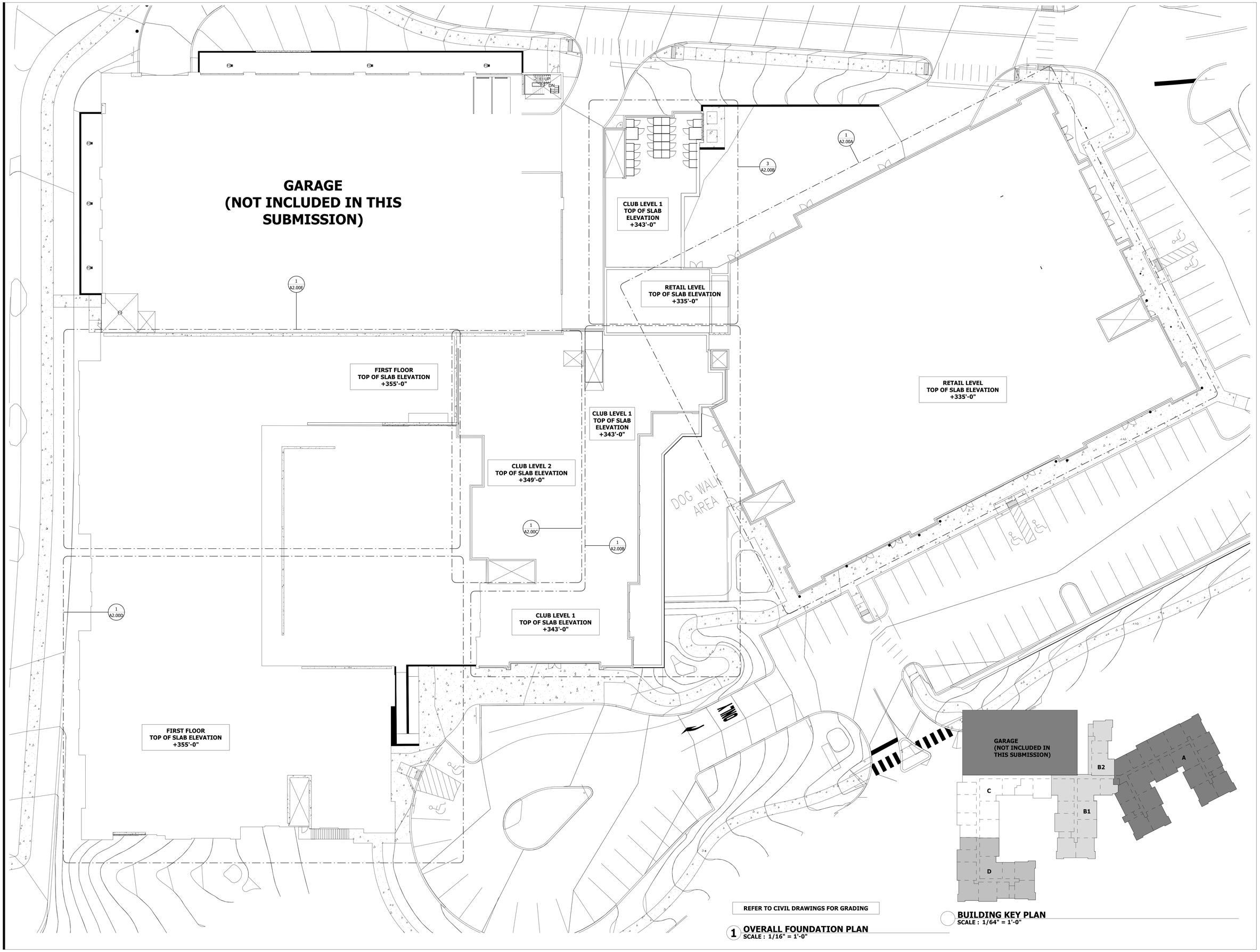


REFER TO CIVIL DRAWINGS FOR GRADING

1 OVERALL FOUNDATION PLAN
SCALE : 1/16" = 1'-0"

BUILDING KEY PLAN
SCALE : 1/64" = 1'-0"

ALL REPORTS, PLANS, SPECIFICATIONS AND COMPUTER FILES RELATING TO THIS PROJECT ARE THE PROPERTY OF THE MARTIN ARCHITECTURAL GROUP. THE MARTIN ARCHITECTURAL GROUP RETAINS ALL COMMON LAW, STATUTE AND OTHER RESERVED RIGHTS INCLUDING THE COPYRIGHT THERETO. REPRODUCTION OF THE MATERIAL HEREIN OR SUBSTANTIAL USE WITHOUT WRITTEN PERMISSION OF THE MARTIN ARCHITECTURAL GROUP VIOLATES THE COPYRIGHT LAWS OF THE UNITED STATES AND WILL BE SUBJECT TO LEGAL PROSECUTION.
©2022, The Martin Architectural Group, P.C.

REGISTERED ARCHITECT PENNSYLVANIA DREW A. ROMANIC No. RA407676

THE MARTIN ARCHITECTURAL GROUP, P.C.
ARCHITECTS AND LAND PLANNERS
A PROFESSIONAL CORPORATION
240 NORTH 22ND STREET, PHILADELPHIA, PA, 19103
P (215) 665-1080 F (215) 561-5064

| | |
|---|---|
| P.A.: | DREW ROMANIC |
| P.M.: | JASON DECAMPLI |
| DRAWN BY: | Author |
| PROJECT NO: | 1362-12 |

| NO. | REVISION | DATE |
|---|---|---|
| 1 | PERMIT SET | 12/20/22 |

FOUNDATION PLAN
**Granite Run Apartment 02**
MIDDLETOWN TOWNSHIP, PA

SCALE:
DATE: 10/25/22

# A2.00

©2022, The Martin Architectural Group, P.C.

Printed: 1/13/2023 4:22:28 PM

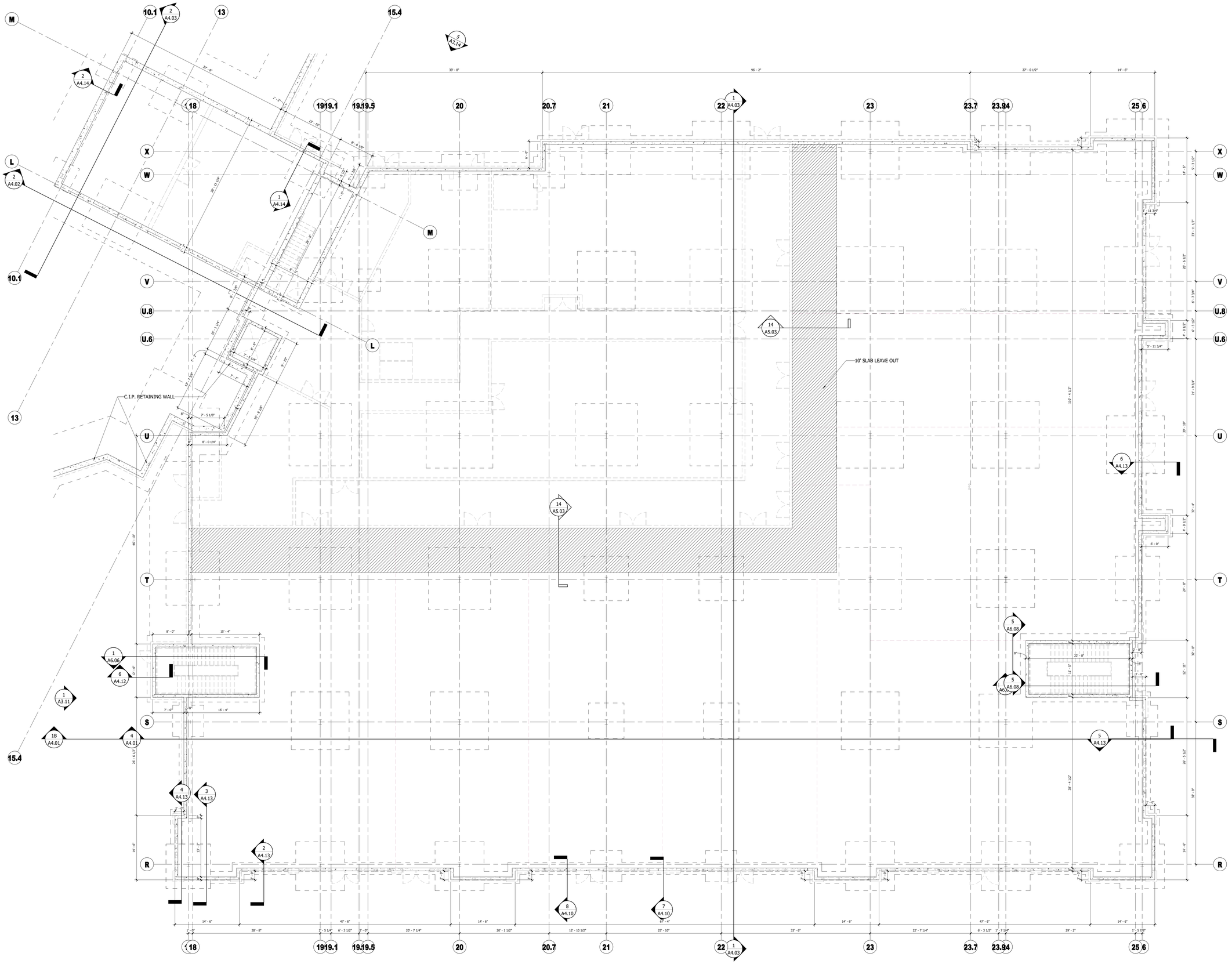


**1 FOUNDATION PLAN - RETAIL LEVEL**
**SCALE : 1/8" = 1'-0"**


ALL REPORTS, PLANS, SPECIFICATIONS AND COMPUTER FILES RELATING TO THIS PROJECT ARE THE PROPERTY OF THE MARTIN ARCHITECTURAL GROUP. THE MARTIN ARCHITECTURAL GROUP RETAINS ALL COMMON LAW, STATUTE AND OTHER RESERVED RIGHTS INCLUDING THE COPY-RIGHT THERETO. REPRODUCTION OF THE MATERIAL HEREIN OR SUBSTANTIAL USE WITHOUT WRITTEN PERMISSION OF THE MARTIN ARCHITECTURAL GROUP VIOLATES THE COPYRIGHT LAWS OF THE UNITED STATES AND WILL BE SUBJECT TO LEGAL PROSECUTION.
©2022, The Martin Architectural Group, P.C.


NIC

REGISTERED ARCHITECT COMMONWEALTH OF PENNSYLVANIA DREW ROMANIC No. RA409178

Professi
I hereby prepare drw/ac laws of

Professi
License Expiratic


**THE MARTIN ARCHITECTURAL GROUP, P.C.**
**ARCHITECTS AND LAND PLANNERS**
A PROFESSIONAL CORPORATION
240 NORTH 22ND STREET, PHILADELPHIA, PA, 19103
P (215) 665-1680 F (215) 561-5064


| | |
|---|---|
| P.A.: | DREW ROMANIC |
| P.M.: | JASON DECAMPLI |
| DRAWN BY: | Author |
| PROJECT NO: | 1362-12 |

| NO. | REVISION | DATE |
|---|---|---|
| 1 | PERMIT-SET | 12/20/22 |

# FOUNDATION PLAN - RETAIL LEVEL

## Granite Run Apartment 02

MIDDLETOWN TOWNSHIP, PA

SCALE:
DATE: 12/20/22

**A2.00A**

©2022, The Martin Architectural Group, P.C.

Printed: 1/13/2023 4:22:31 PM




**BUILDING KEY PLAN**
SCALE : 1/64" = 1'-0"

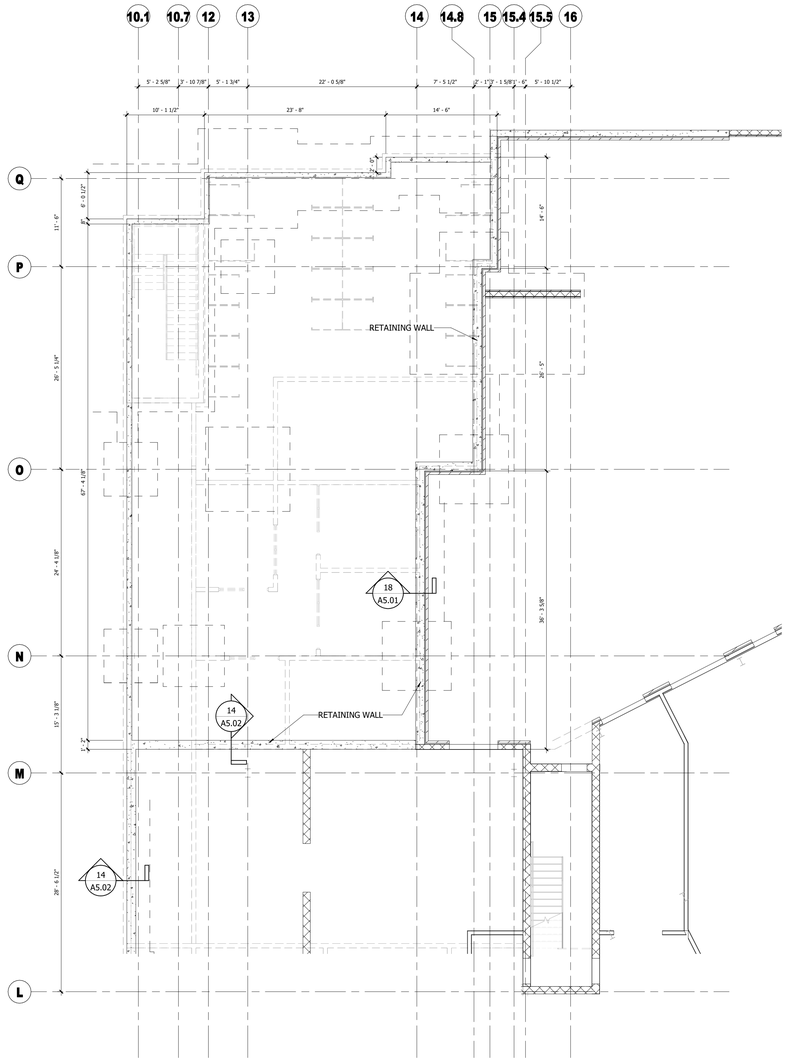


**3 FOUNDATION PLAN - CLUB LEVEL 1A**
SCALE : 1/8" = 1'-0"

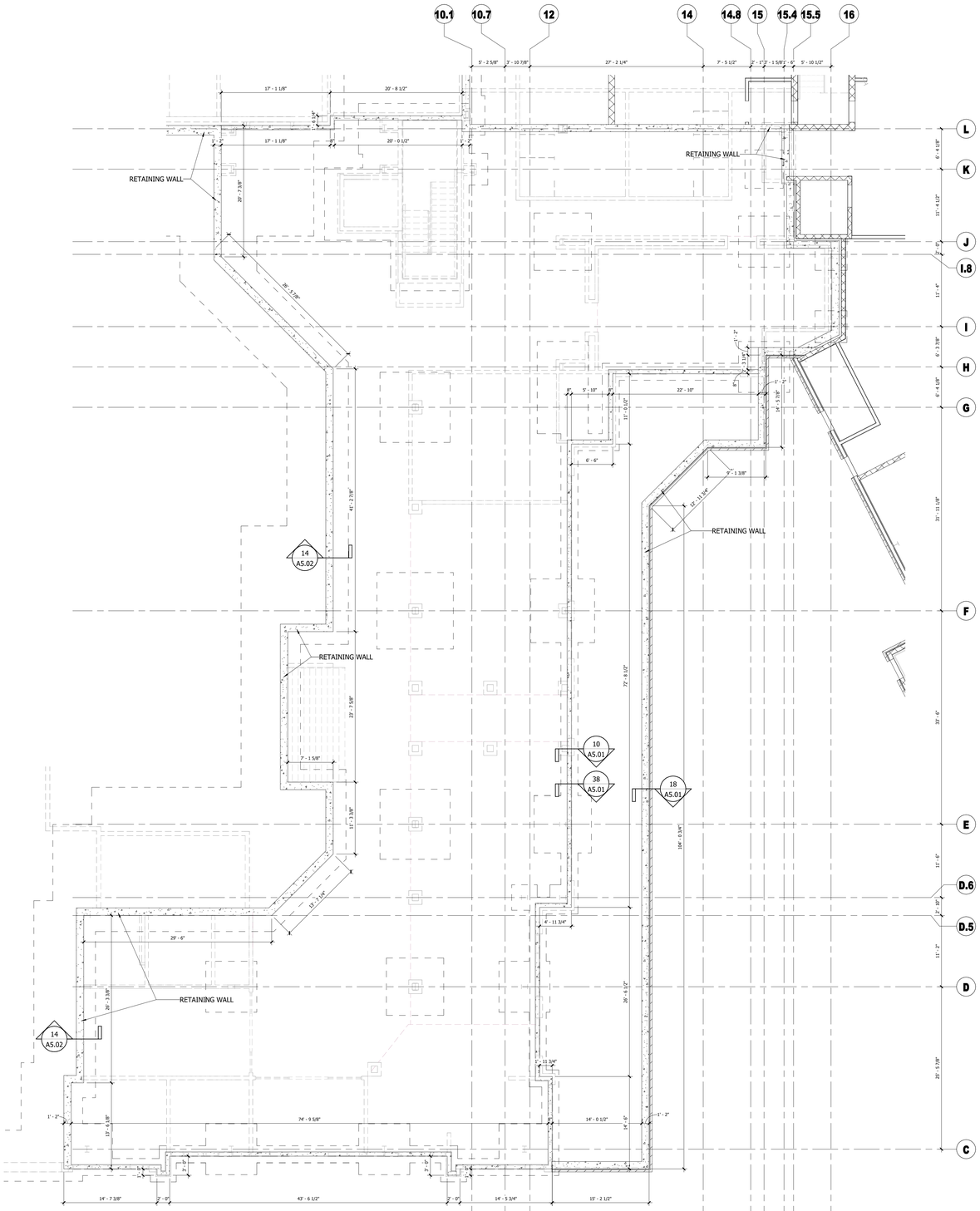


**1 FOUNDATION PLAN - CLUB LEVEL 1**
SCALE : 1/8" = 1'-0"

ALL REPORTS, PLANS, SPECIFICATIONS AND COMPUTER FILES RELATING TO THIS PROJECT ARE THE PROPERTY OF THE MARTIN ARCHITECTURAL GROUP. THE MARTIN ARCHITECTURAL GROUP RETAINS ALL COMMON LAW, STATUTE AND OTHER RESERVED RIGHTS INCLUDING THE COPYRIGHT THERETO. REPRODUCTION OF THE MATERIAL HEREIN OR SUBSTANTIAL USE WITHOUT WRITTEN PERMISSION OF THE MARTIN ARCHITECTURAL GROUP VIOLATES THE COPYRIGHT LAWS OF THE UNITED STATES AND WILL BE SUBJECT TO LEGAL PROSECUTION.
©2022, The Martin Architectural Group, P.C.




THE MARTIN ARCHITECTURAL GROUP, P.C.
ARCHITECTS AND LAND PLANNERS
A PROFESSIONAL CORPORATION
240 NORTH 22ND STREET, PHILADELPHIA, PA, 19103
P (215) 665-1080 F (215) 561-5064

| | |
|---|---|
| P.A.: | DREW ROMANIC |
| P.M.: | JASON DECAMPLI |
| DRAWN BY: | Author |
| PROJECT NO: | 1362-12 |

| NO. | REVISION | DATE |
|---|---|---|
| 1 | PERMIT SET | 12/20/22 |

FOUNDATION PLAN - CLUB LEVEL 1

**Granite Run Apartment 02**

MIDDLETOWN TOWNSHIP, PA

SCALE:
DATE: 12/20/22

**A2.00B**

©2022, The Martin Architectural Group, P.C.

Printed: 1/13/2023 4:22:35 PM




**BUILDING KEY PLAN**
SCALE : 1/64" = 1'-0"

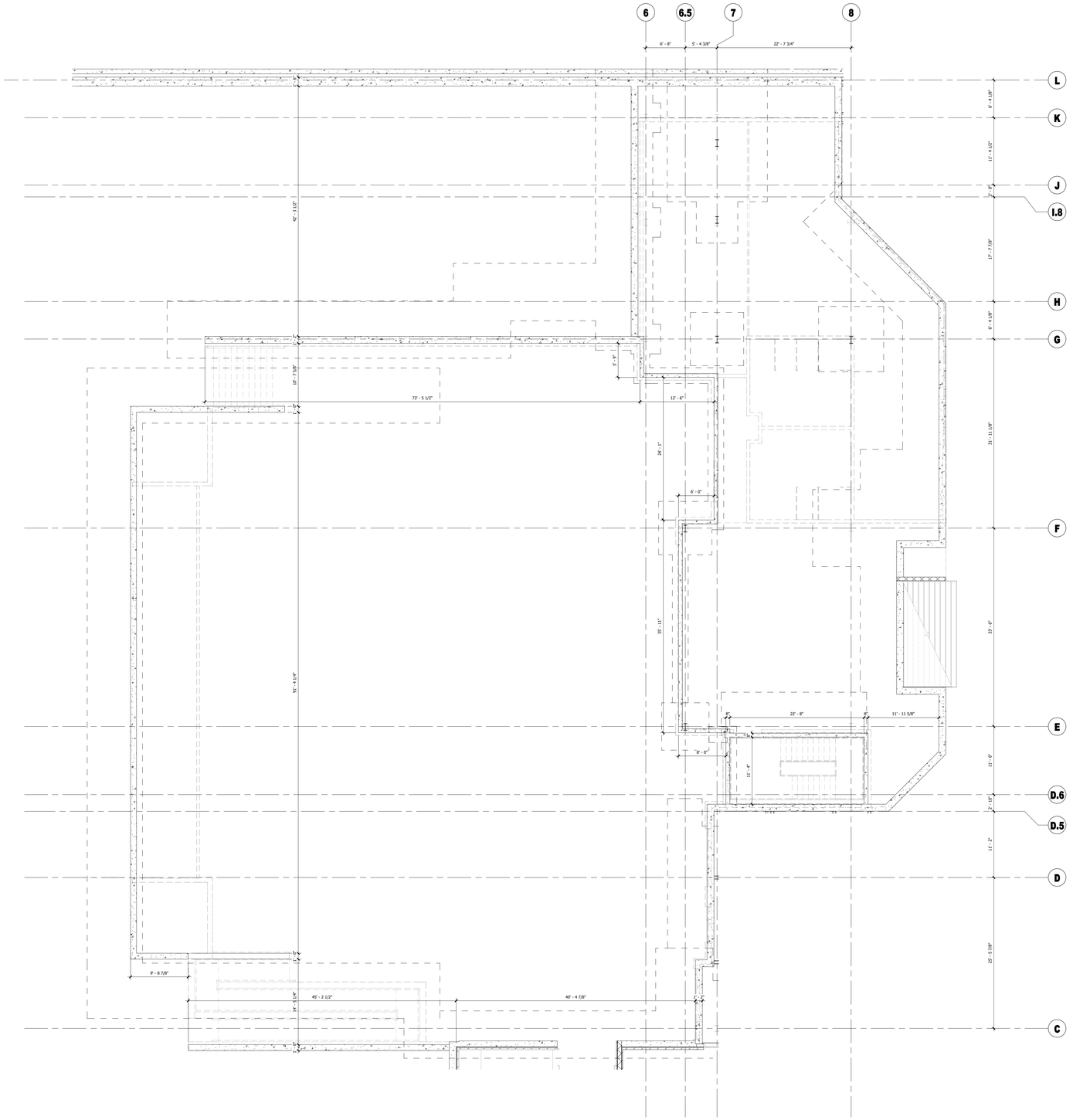


**1 FOUNDATION PLAN - CLUB LEVEL 2**
SCALE : 1/8" = 1'-0"

ALL REPORTS, PLANS, SPECIFICATIONS AND COMPUTER FILES RELATING TO THIS PROJECT ARE THE PROPERTY OF THE MARTIN ARCHITECTURAL GROUP. THE MARTIN ARCHITECTURAL GROUP RETAINS ALL COMMON LAW, STATUTE AND OTHER RESERVED RIGHTS INCLUDING THE COPYRIGHT THERETO. REPRODUCTION OF THE MATERIAL HEREIN OR SUBSTANTIAL USE WITHOUT WRITTEN PERMISSION OF THE MARTIN ARCHITECTURAL GROUP VIOLATES THE COPYRIGHT LAWS OF THE UNITED STATES AND WILL BE SUBJECT TO LEGAL PROSECUTION.
©2022, The Martin Architectural Group, P.C.




THE MARTIN ARCHITECTURAL GROUP, P.C.
ARCHITECTS AND LAND PLANNERS
A PROFESSIONAL CORPORATION
240 NORTH 22ND STREET, PHILADELPHIA, PA, 19103
P (215) 665-1080 F (215) 561-5064

| | |
|---|---|
| P.A.: | DREW ROMANIC |
| P.M.: | JASON DECAMPLI |
| DRAWN BY: | Author |
| PROJECT NO: | 1362-12 |

| NO. | REVISION | DATE |
|---|---|---|
| | | |

FOUNDATION PLAN - CLUB LEVEL 2

**Granite Run Apartment 02**

MIDDLETOWN TOWNSHIP, PA

SCALE:
DATE: 12/22/22

# A2.00C

©2022, The Martin Architectural Group, P.C.

Printed: 1/13/2023 4:22:38 PM




**BUILDING KEY PLAN**
SCALE : 1/64" = 1'-0"

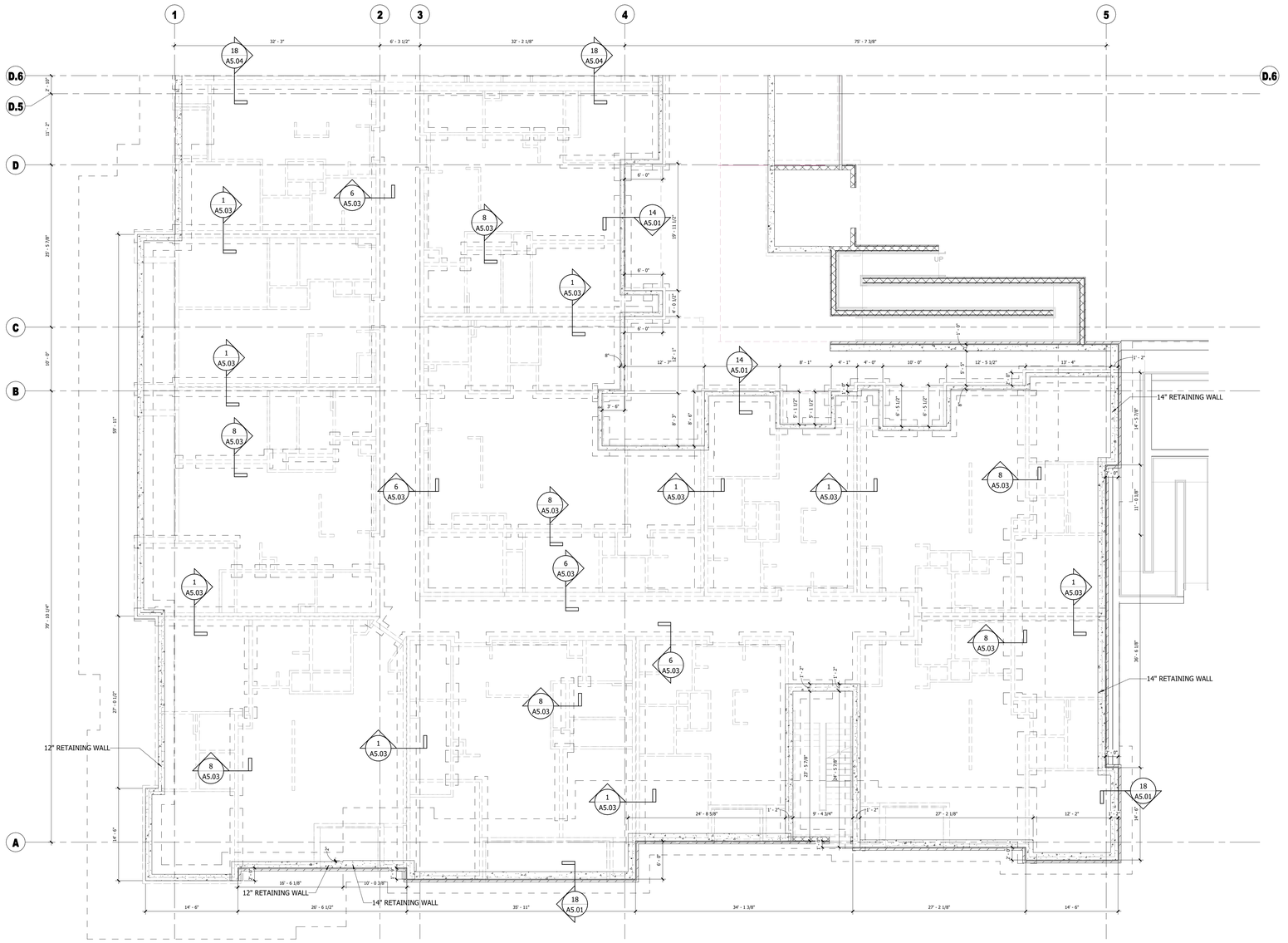


**1 FOUNDATION PLAN - FIRST FLOOR A**
SCALE : 1/8" = 1'-0"

ALL REPORTS, PLANS, SPECIFICATIONS AND COMPUTER FILES RELATING TO THIS PROJECT ARE THE PROPERTY OF THE MARTIN ARCHITECTURAL GROUP. THE MARTIN ARCHITECTURAL GROUP RETAINS ALL COMMON LAW, STATUTE AND OTHER RESERVED RIGHTS INCLUDING THE COPYRIGHT THERETO. REPRODUCTION OF THE MATERIAL HEREIN OR SUBSTANTIAL USE WITHOUT WRITTEN PERMISSION OF THE MARTIN ARCHITECTURAL GROUP VIOLATES THE COPYRIGHT LAWS OF THE UNITED STATES AND WILL BE SUBJECT TO LEGAL PROSECUTION.
©2022, The Martin Architectural Group, P.C.




THE MARTIN ARCHITECTURAL GROUP, P.C.
ARCHITECTS AND LAND PLANNERS
A PROFESSIONAL CORPORATION
240 NORTH 22ND STREET, PHILADELPHIA, PA, 19103
P (215) 665-1080 F (215) 561-5064

| | |
|---|---|
| P.A.: | DREW ROMANIC |
| P.M.: | JASON DECAMPLI |
| DRAWN BY: | Author |
| PROJECT NO: | 1362-12 |

| NO. | REVISION | DATE |
|---|---|---|
| 1 | PERMIT SET | 12/20/22 |

FOUNDATION PLAN - FIRST FLOOR A

**Granite Run Apartment 02**

MIDDLETOWN TOWNSHIP, PA

SCALE:
DATE: 12/20/22

**A2.00D**

©2022, The Martin Architectural Group, P.C.

Printed: 1/13/2023 4:22:41 PM

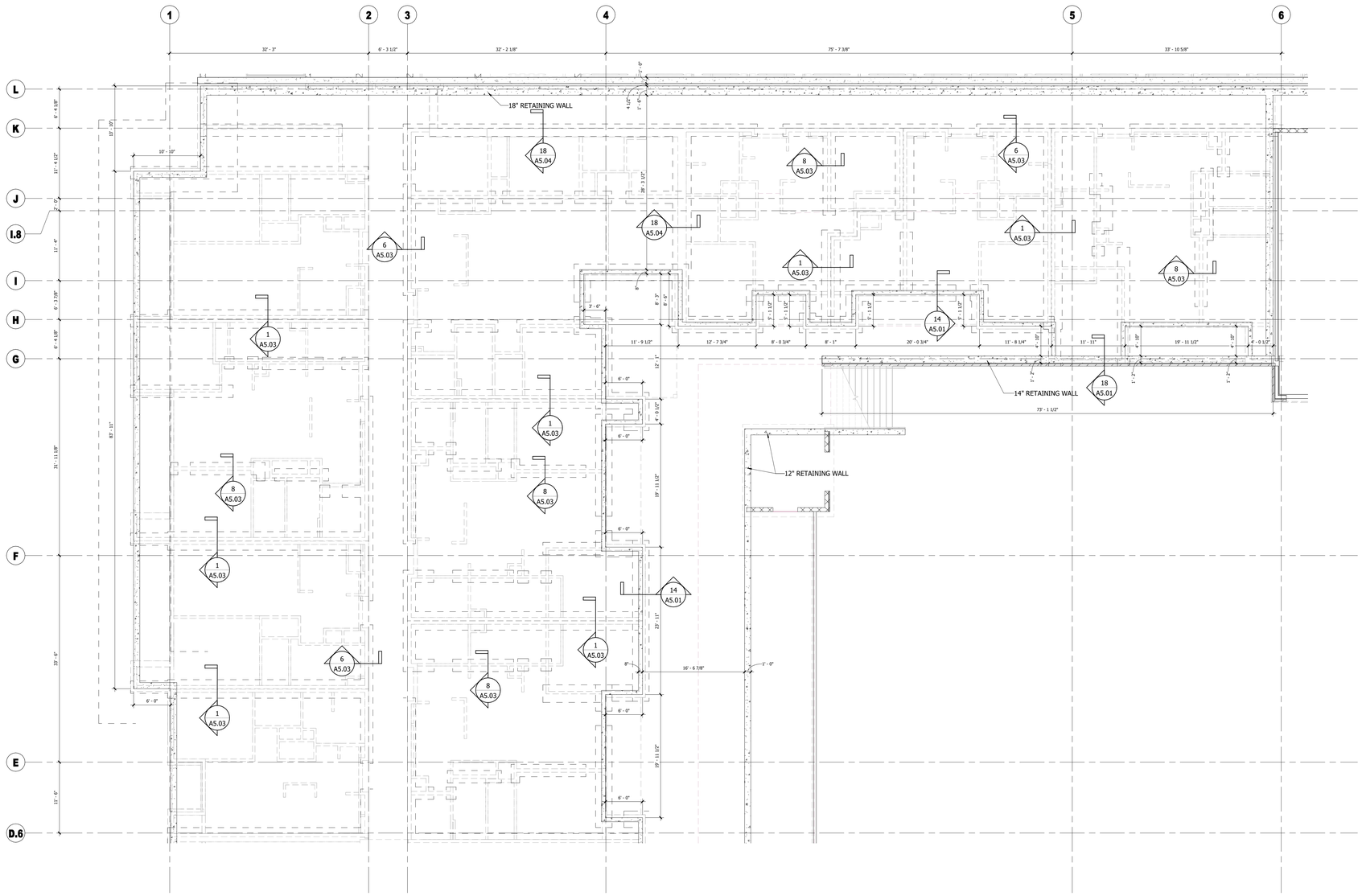


**1 FOUNDATION PLAN - FIRST FLOOR B**
SCALE : 1/8" = 1'-0"


ALL REPORTS, PLANS, SPECIFICATIONS AND COMPUTER FILES RELATING TO THIS PROJECT ARE THE PROPERTY OF THE MARTIN ARCHITECTURAL GROUP. THE MARTIN ARCHITECTURAL GROUP RETAINS ALL COMMON LAW, STATUTE AND OTHER RESERVED RIGHTS INCLUDING THE COPYRIGHT THERETO. REPRODUCTION OF THE MATERIAL HEREIN OR SUBSTANTIAL USE WITHOUT WRITTEN PERMISSION OF THE MARTIN ARCHITECTURAL GROUP VIOLATES THE COPYRIGHT LAWS OF THE UNITED STATES AND WILL BE SUBJECT TO LEGAL PROSECUTION.
©2022, The Martin Architectural Group, P.C.



THE MARTIN ARCHITECTURAL GROUP, P.C.
ARCHITECTS AND LAND PLANNERS
A PROFESSIONAL CORPORATION
240 NORTH 22ND STREET, PHILADELPHIA, PA, 19103
P (215) 665-1080 F (215) 561-5064


| | |
|---|---|
| P.A.: | DREW ROMANIC |
| P.M.: | JASON DECAMPLI |
| DRAWN BY: | Author |
| PROJECT NO: | 1362-12 |

| NO. | REVISION | DATE |
|---|---|---|

FOUNDATION PLAN - FIRST FLOOR B

**Granite Run Apartment 02**

MIDDLETOWN TOWNSHIP, PA

SCALE:
DATE: 12/22/22

**A2.00E**

©2022, The Martin Architectural Group, P.C.

Printed: 1/13/2023 4:22:44 PM

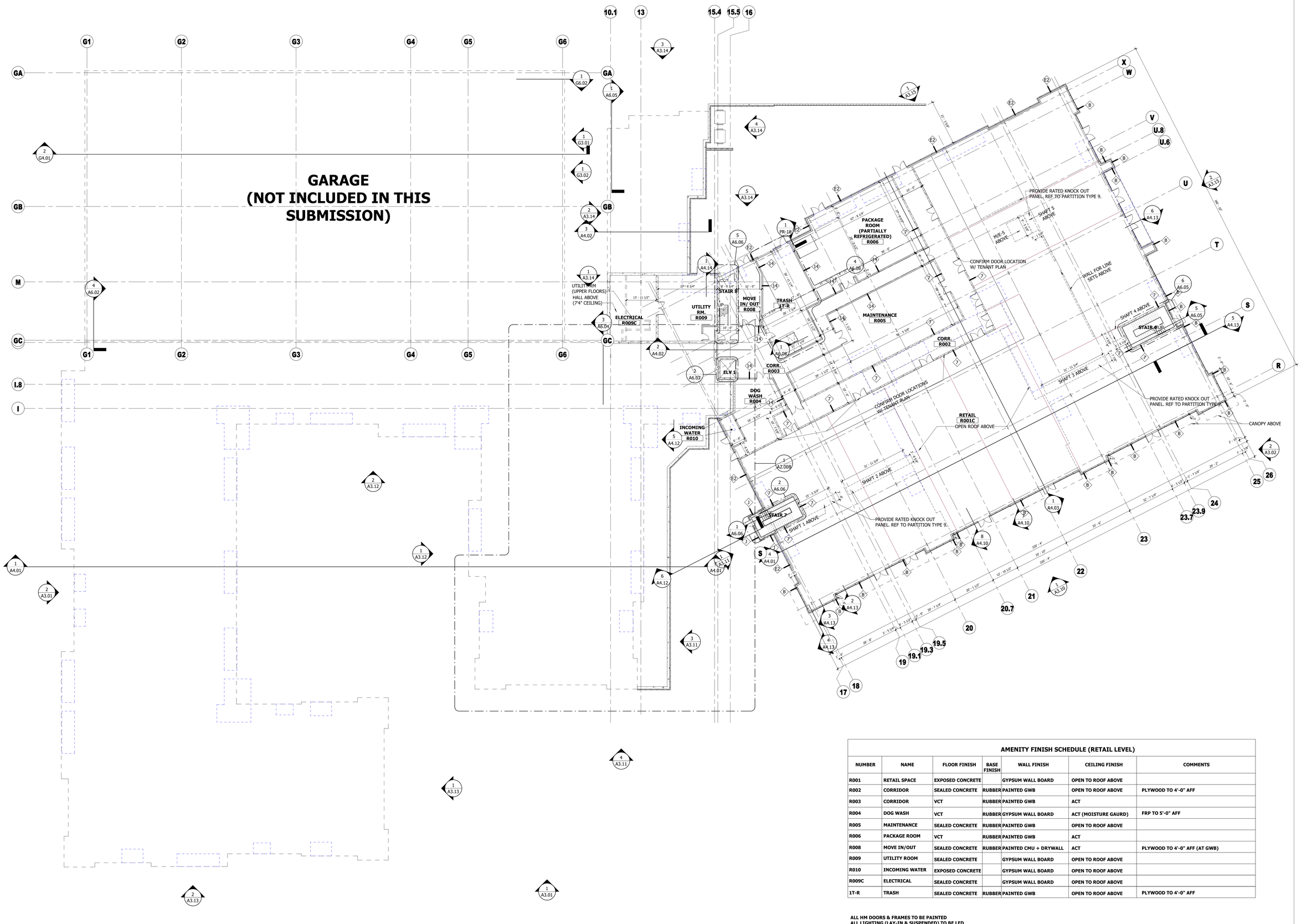


| AMENITY FINISH SCHEDULE (RETAIL LEVEL) | | | | | | |
|---|---|---|---|---|---|---|
| NUMBER | NAME | FLOOR FINISH | BASE FINISH | WALL FINISH | CEILING FINISH | COMMENTS |
| R001 | RETAIL SPACE | EXPOSED CONCRETE | | GYPSUM WALL BOARD | OPEN TO ROOF ABOVE | |
| R002 | CORRIDOR | SEALED CONCRETE | RUBBER | PAINTED GWB | OPEN TO ROOF ABOVE | PLYWOOD TO 4'-0" AFF |
| R003 | CORRIDOR | VCT | RUBBER | PAINTED GWB | ACT | |
| R004 | DOG WASH | VCT | RUBBER | GYPSUM WALL BOARD | ACT (MOISTURE GAURD) | FRP TO 5'-0" AFF |
| R005 | MAINTENANCE | SEALED CONCRETE | RUBBER | PAINTED GWB | OPEN TO ROOF ABOVE | |
| R006 | PACKAGE ROOM | VCT | RUBBER | PAINTED GWB | ACT | |
| R008 | MOVE IN/OUT | SEALED CONCRETE | RUBBER | PAINTED CMU + DRYWALL | ACT | PLYWOOD TO 4'-0" AFF (AT GWB) |
| R009 | UTILITY ROOM | SEALED CONCRETE | | GYPSUM WALL BOARD | OPEN TO ROOF ABOVE | |
| R010 | INCOMING WATER | EXPOSED CONCRETE | | GYPSUM WALL BOARD | OPEN TO ROOF ABOVE | |
| R009C | ELECTRICAL | SEALED CONCRETE | | GYPSUM WALL BOARD | OPEN TO ROOF ABOVE | |
| 1T-R | TRASH | SEALED CONCRETE | RUBBER | PAINTED GWB | OPEN TO ROOF ABOVE | PLYWOOD TO 4'-0" AFF |

ALL HM DOORS & FRAMES TO BE PAINTED
ALL LIGHTING (LAY-IN & SUSPENDED) TO BE LED

1 RETAIL LEVEL
SCALE : 1/16" = 1'-0"

ALL REPORTS, PLANS, SPECIFICATIONS AND COMPUTER FILES RELATING TO THIS PROJECT ARE THE PROPERTY OF THE MARTIN ARCHITECTURAL GROUP. THE MARTIN ARCHITECTURAL GROUP RETAINS ALL COMMON LAW, STATUTE AND OTHER RESERVED RIGHTS INCLUDING THE COPYRIGHT THERETO. REPRODUCTION OF THE MATERIAL HEREIN OR SUBSTANTIAL USE WITHOUT WRITTEN PERMISSION OF THE MARTIN ARCHITECTURAL GROUP VIOLATES THE COPYRIGHT LAWS OF THE UNITED STATES AND WILL BE SUBJECT TO LEGAL PROSECUTION.
©2022, The Martin Architectural Group, P.C.

Professi
I hereby prepare duly lice laws of
Professi License Expiratic
NIC

THE MARTIN ARCHITECTURAL GROUP, P.C.
ARCHITECTS AND LAND PLANNERS
A PROFESSIONAL CORPORATION
240 NORTH 22ND STREET, PHILADELPHIA, PA, 19103
P (215) 665-1080 F (215) 561-5064

| | |
|---|---|
| P.A.: | DREW ROMANIC |
| P.M.: | JASON DECAMPLI |
| DRAWN BY: | MAG |
| PROJECT NO: | 1362-12 |

| NO. | REVISION | DATE |
|---|---|---|
| 1 | PERMIT SET | 12/20/22 |

# RETAIL FLOOR PLAN
## Granite Run Apartment 02

MIDDLETOWN TOWNSHIP, PA

SCALE: AS NOTED
DATE: 12/31/2017

A2.01

©2022, The Martin Architectural Group, P.C.

Printed: 1/13/2023 4:22:49 PM

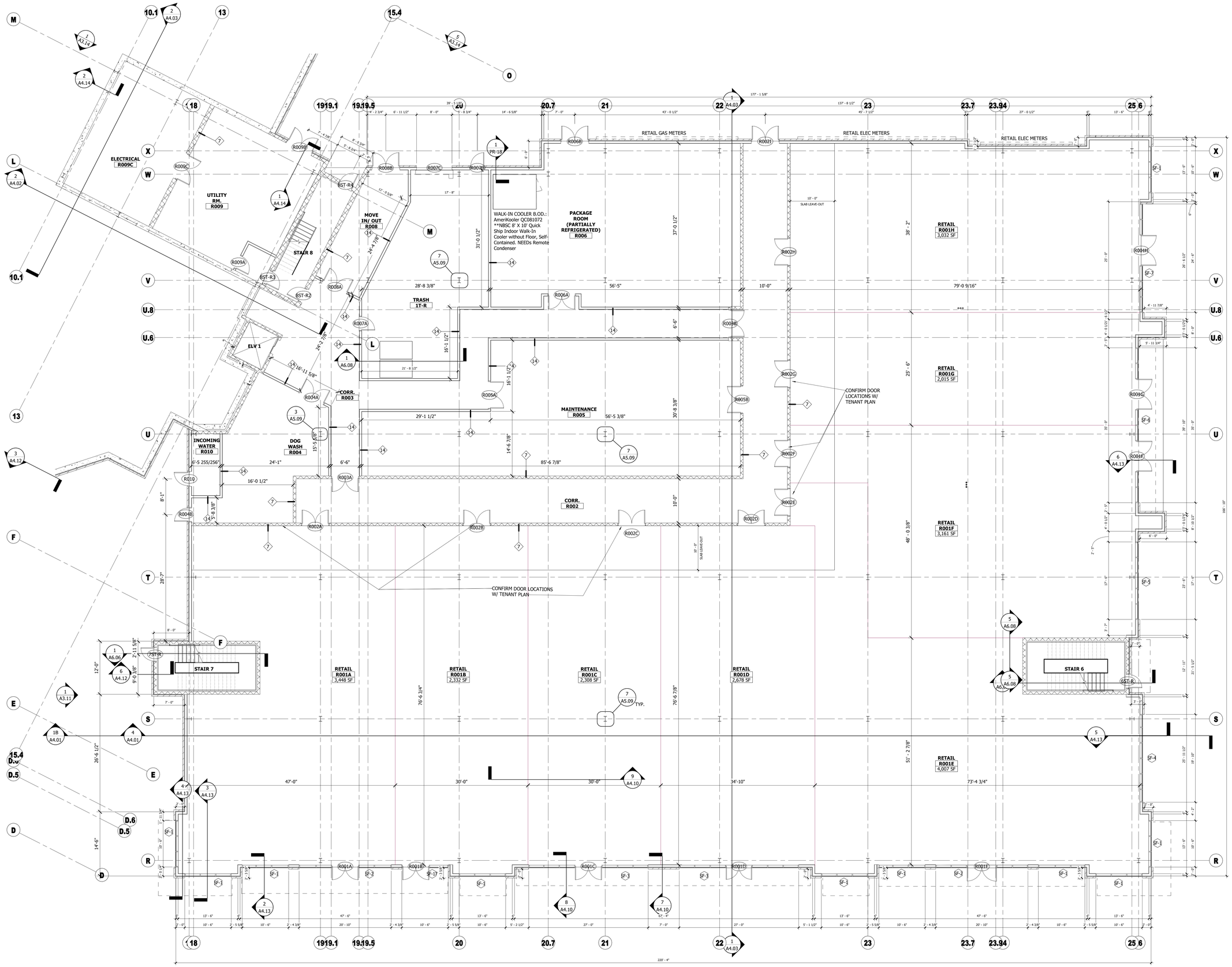


1 **ENLARGED RETAIL PLAN**
SCALE : 1/8" = 1'-0"


ALL REPORTS, PLANS, SPECIFICATIONS AND COMPUTER FILES RELATING TO THIS PROJECT ARE THE PROPERTY OF THE MARTIN ARCHITECTURAL GROUP. THE MARTIN ARCHITECTURAL GROUP RETAINS ALL COMMON LAW, STATUTE AND OTHER RESERVED RIGHTS INCLUDING THE COPYRIGHT THERETO. REPRODUCTION OF THE MATERIAL HEREIN OR SUBSTANTIAL USE WITHOUT WRITTEN PERMISSION OF THE MARTIN ARCHITECTURAL GROUP VIOLATES THE COPYRIGHT LAWS OF THE UNITED STATES AND WILL BE SUBJECT TO LEGAL PROSECUTION.
©2022, The Martin Architectural Group, P.C.



THE MARTIN ARCHITECTURAL GROUP, P.C.
ARCHITECTS AND LAND PLANNERS
A PROFESSIONAL CORPORATION
240 NORTH 22ND STREET, PHILADELPHIA, PA, 19103
P (215) 665-1080 F (215) 561-5064


| | |
|---|---|
| P.A.: | DREW ROMANIC |
| P.M.: | JASON DECAMPLI |
| DRAWN BY: | Author |
| PROJECT NO: | 1362-12 |

| NO. | REVISION | DATE |
|---|---|---|
| 1 | PERMIT SET | 12/20/22 |

# ENLARGED RETAIL FLOOR PLAN
## Granite Run Apartment 02

MIDDLETOWN TOWNSHIP, PA

SCALE:
DATE: 09/27/22

# A2.01A

©2022, The Martin Architectural Group, P.C.

Printed: 1/13/2023 4:22:53 PM

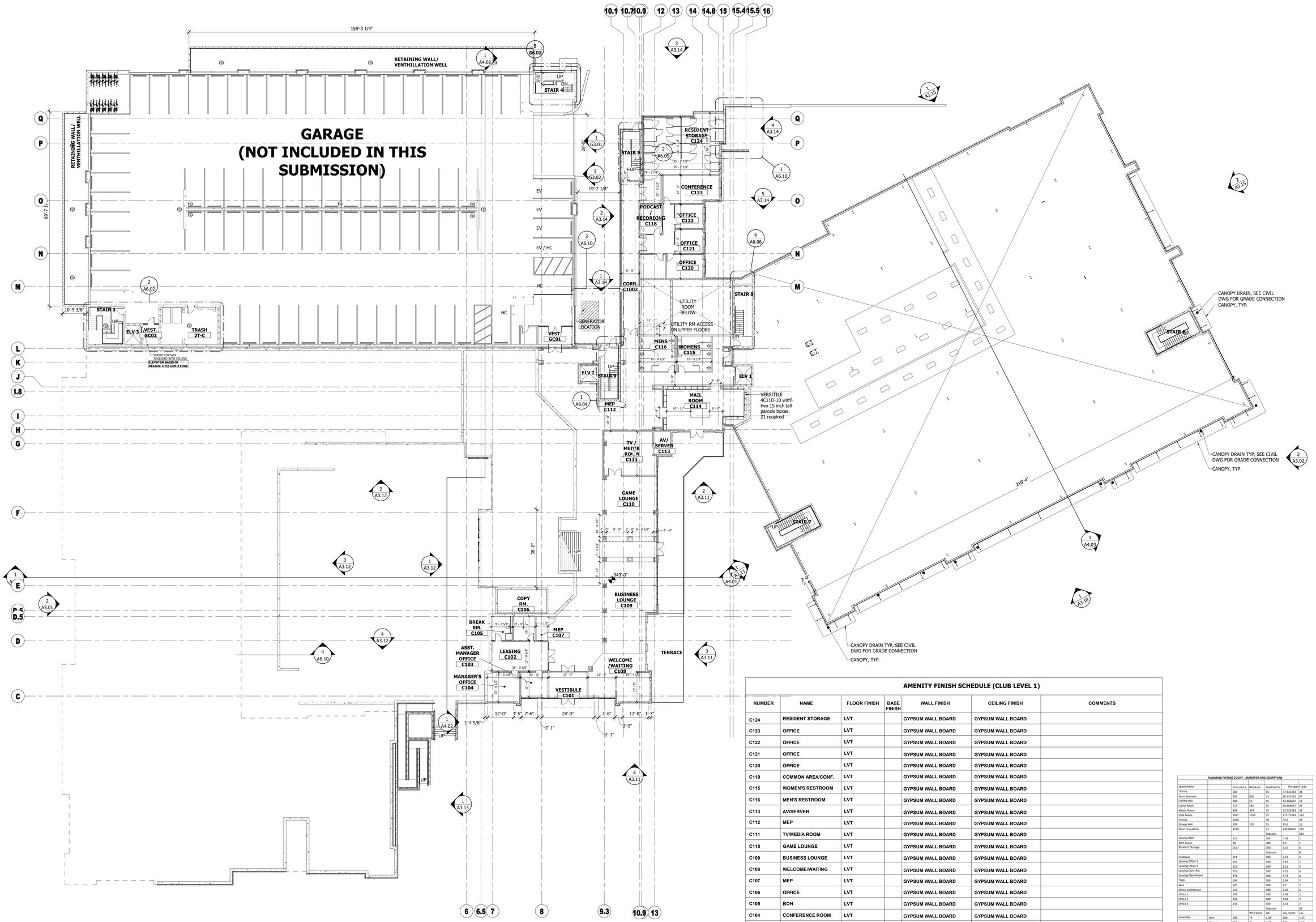


**1 CLUB LEVEL 1**
**SCALE : 1/16" = 1'-0"**

## AMENITY FINISH SCHEDULE (CLUB LEVEL 1)

| NUMBER | NAME | FLOOR FINISH | BASE FINISH | WALL FINISH | CEILING FINISH | COMMENTS |
|---|---|---|---|---|---|---|
| C124 | RESIDENT STORAGE | LVT | | GYPSUM WALL BOARD | GYPSUM WALL BOARD | |
| C123 | OFFICE | LVT | | GYPSUM WALL BOARD | GYPSUM WALL BOARD | |
| C122 | OFFICE | LVT | | GYPSUM WALL BOARD | GYPSUM WALL BOARD | |
| C121 | OFFICE | LVT | | GYPSUM WALL BOARD | GYPSUM WALL BOARD | |
| C120 | OFFICE | LVT | | GYPSUM WALL BOARD | GYPSUM WALL BOARD | |
| C119 | COMMON AREA/CONF. | LVT | | GYPSUM WALL BOARD | GYPSUM WALL BOARD | |
| C115 | WOMEN'S RESTROOM | LVT | | GYPSUM WALL BOARD | GYPSUM WALL BOARD | |
| C116 | MEN'S RESTROOM | LVT | | GYPSUM WALL BOARD | GYPSUM WALL BOARD | |
| C113 | AV/SERVER | LVT | | GYPSUM WALL BOARD | GYPSUM WALL BOARD | |
| C112 | MEP | LVT | | GYPSUM WALL BOARD | GYPSUM WALL BOARD | |
| C111 | TV/MEDIA ROOM | LVT | | GYPSUM WALL BOARD | GYPSUM WALL BOARD | |
| C110 | GAME LOUNGE | LVT | | GYPSUM WALL BOARD | GYPSUM WALL BOARD | |
| C109 | BUSINESS LOUNGE | LVT | | GYPSUM WALL BOARD | GYPSUM WALL BOARD | |
| C108 | WELCOME/WAITING | LVT | | GYPSUM WALL BOARD | GYPSUM WALL BOARD | |
| C107 | MEP | LVT | | GYPSUM WALL BOARD | GYPSUM WALL BOARD | |
| C106 | OFFICE | LVT | | GYPSUM WALL BOARD | GYPSUM WALL BOARD | |
| C105 | BOH | LVT | | GYPSUM WALL BOARD | GYPSUM WALL BOARD | |
| C104 | CONFERENCE ROOM | LVT | | GYPSUM WALL BOARD | GYPSUM WALL BOARD | |
| C103 | OFFICE | LVT | | GYPSUM WALL BOARD | GYPSUM WALL BOARD | |
| C102 | LEASING | LVT | | GYPSUM WALL BOARD | GYPSUM WALL BOARD | |
| C101 | VESTIBULE/CONCIERGE | LVT | | GYPSUM WALL BOARD | GYPSUM WALL BOARD | |
| | TERRACE | STAMPED CONC. | | | | |

**PLUMBING FIXTURE COUNT - AMENITIES AND COURTYARD**

| Space Name | | Gross Area | Net Area | Load Factor | Occupant Load | |
|---|---|---|---|---|---|---|
| Library | | 569 | | 15 | 37.933333 | 38 |
| Front Business | | 992 | 860 | 15 | 66.133333 | 67 |
| Gallery Hall | | 184 | 52 | 15 | 12.266667 | 13 |
| Game Room | | 727 | 595 | 15 | 48.466667 | 49 |
| Media Room | | 491 | 359 | 15 | 32.733333 | 33 |
| Club Room | | 1691 | 1559 | 15 | 112.73333 | 113 |
| Fitness | | 1630 | | 50 | 32.6 | 33 |
| Fitness Hall | | 234 | 102 | 15 | 15.6 | 16 |
| Main Circulation | | 3736 | | 15 | 249.06667 | 250 |
| | | | | Subtotal | | 612 |
| Leasing BOH | | 117 | | 300 | 0.39 | 1 |
| MEP Room | | 30 | | 300 | 0.1 | 1 |
| Resident Storage | | 1557 | | 300 | 5.19 | 6 |
| | | | | Subtotal | | 8 |
| Vestibule | | 211 | | 100 | 2.11 | 3 |
| Leasing Office 1 | | 147 | | 100 | 1.47 | 2 |
| Leasing Office 2 | | 115 | | 100 | 1.15 | 2 |
| Leasing Conf. Rm | | 215 | | 100 | 2.15 | 3 |
| Leasing Main Room | | 371 | | 100 | 3.71 | 4 |
| Yoga | | 194 | | 100 | 1.94 | 2 |
| Mail | | 670 | | 100 | 6.7 | 7 |
| Office Conference | | 535 | | 100 | 5.35 | 6 |
| Office 1 | | 143 | | 100 | 1.43 | 2 |
| Office 2 | | 143 | | 100 | 1.43 | 2 |
| Office 3 | | 143 | | 100 | 1.43 | 2 |
| | | | | Subtotal | | 35 |
| | | | | WC Factor | WC | Lav Factor | Lav |
| Assembly | Men | 306 | | 75 | 4.08 | 200 | 1.53 |
| | Women | 306 | | 75 | 4.08 | 200 | 1.53 |
| Storage | Men | 4 | 100 | 0.04 | 100 | 0.04 | |
| | Women | 4 | 100 | 0.04 | 100 | 0.04 | |
| Business | Men | 14 | | 1 per 25 | 1 | 1 per 40 | 1 |
| | Women | 14 | | 1 per 25 | 1 | 1 per 40 | 1 |
| TOTALS | | | | WCs | | Lavs | Fountain |
| Mens | | 5.12 | | 6 | 2.57 | 3 | 1 |
| Womens | | 5.12 | | 6 | 2.57 | 3 | 1 |

*Class C pool - Semi public; no bathing facilities required

ALL REPORTS, PLANS, SPECIFICATIONS AND COMPUTER FILES RELATING TO THIS PROJECT ARE THE PROPERTY OF THE MARTIN ARCHITECTURAL GROUP. THE MARTIN ARCHITECTURAL GROUP RETAINS ALL COMMON LAW, STATUTE AND OTHER RESERVED RIGHTS INCLUDING THE COPY-RIGHT THERETO. REPRODUCTION OF THE MATERIAL HEREIN OR SUBSTANTIAL USE WITHOUT WRITTEN PERMISSION OF THE MARTIN ARCHITECTURAL GROUP VIOLATES THE COPYRIGHT LAWS OF THE UNITED STATES AND WILL BE SUBJECT TO LEGAL PROSECUTION.
©2022, The Martin Architectural Group, P.C.

REGISTERED ARCHITECT COMMONWEALTH OF PENNSYLVANIA DREW ROMANIC No. RA-020015

THE MARTIN ARCHITECTURAL GROUP, P.C.
ARCHITECTS AND LAND PLANNERS
A PROFESSIONAL CORPORATION
240 NORTH 22ND STREET, PHILADELPHIA, PA, 19103
P (215) 665-1680 F (215) 561-5064

| | |
|---|---|
| P.A.: | DREW ROMANIC |
| P.M.: | JASON DECAMPLI |
| DRAWN BY: | Author |
| PROJECT NO: | 1362-12 |

| NO. | REVISION | DATE |
|---|---|---|
| 1 | PERMIT SET | 12/20/22 |

# CLUB LEVEL 1 FLOOR PLAN
## Granite Run Apartment 02
MIDDLETOWN TOWNSHIP, PA

SCALE:
DATE: 06/21/22

**A2.02**

©2022, The Martin Architectural Group, P.C.

Printed: 1/13/2023 4:23:09 PM




**BUILDING KEY PLAN**

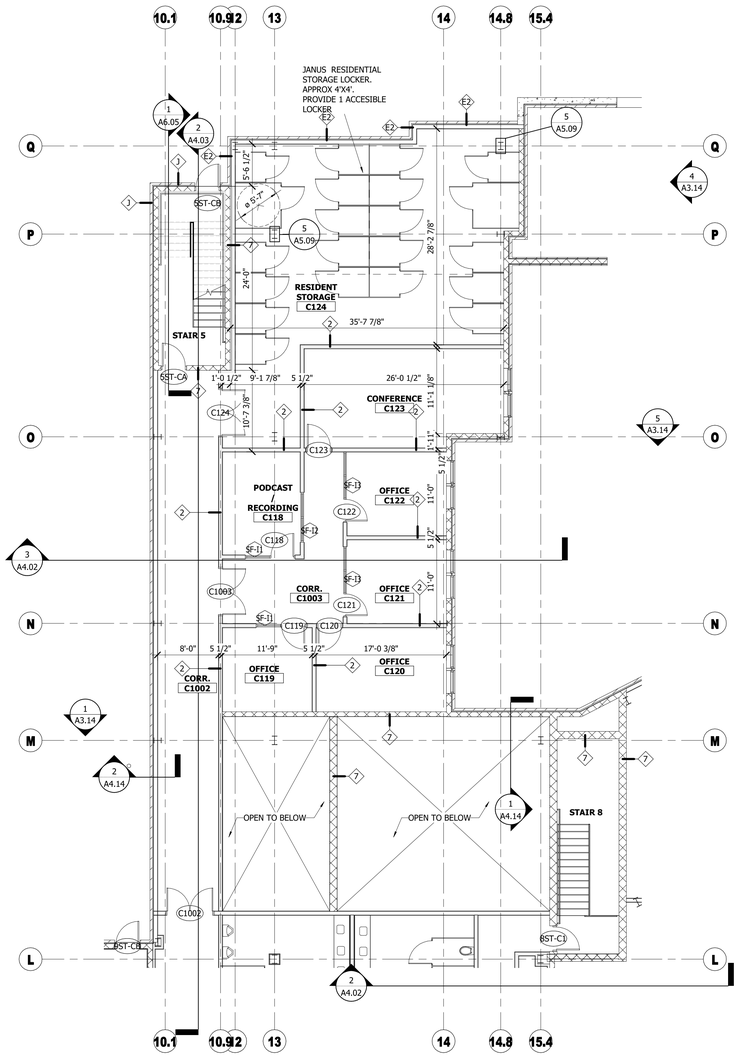


**2 CLUB LEVEL 1 - ENLARGED PLAN B2**
SCALE : 1/8" = 1'-0"

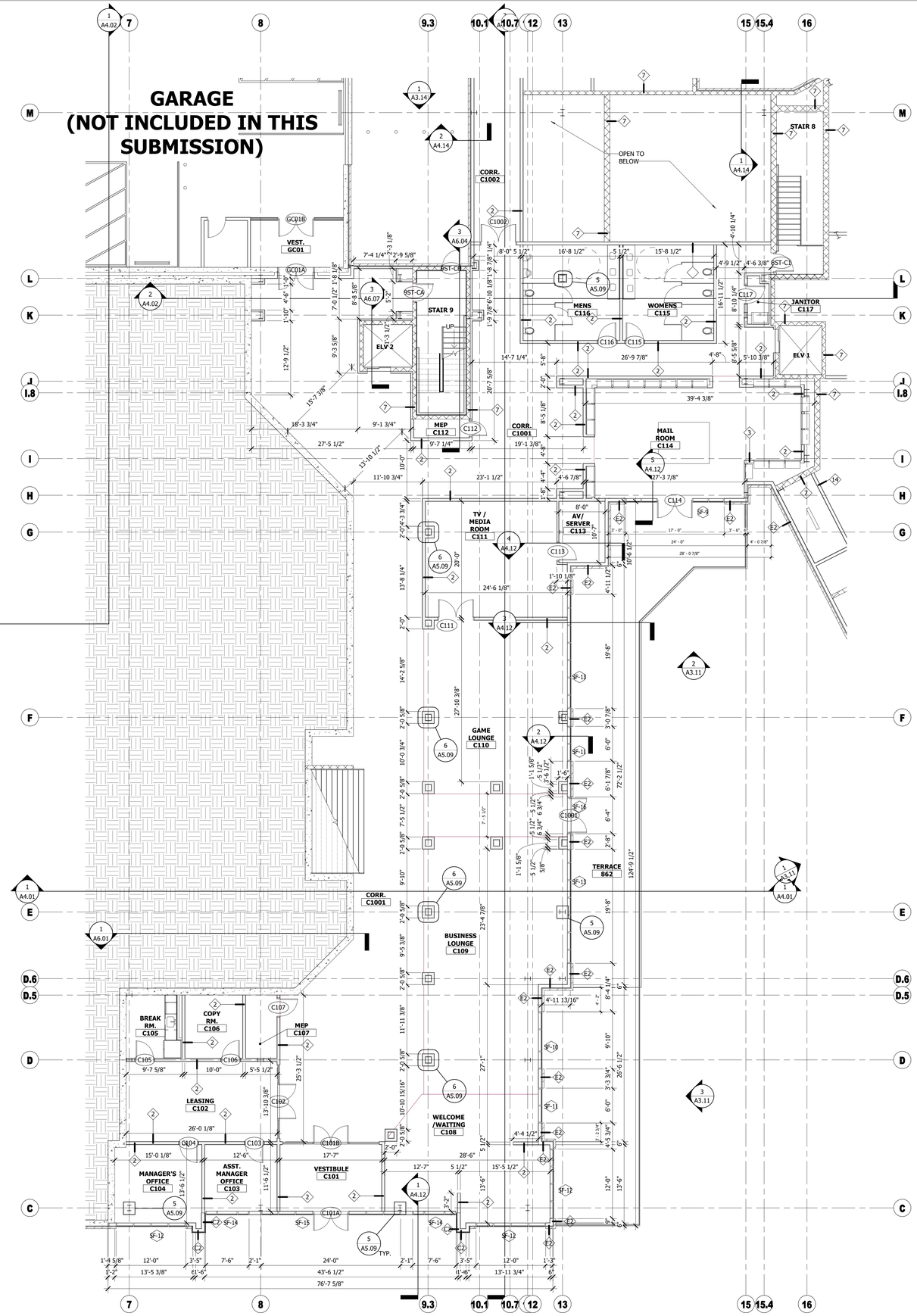


**1 CLUB LEVEL 1 - ENLARGED PLAN B1**
SCALE : 1/8" = 1'-0"

ALL REPORTS, PLANS, SPECIFICATIONS AND COMPUTER FILES RELATING TO THIS PROJECT ARE THE PROPERTY OF THE MARTIN ARCHITECTURAL GROUP. THE MARTIN ARCHITECTURAL GROUP RETAINS ALL COMMON LAW, STATUTE AND OTHER RESERVED RIGHTS INCLUDING THE COPY-RIGHT THERETO. REPRODUCTION OF THE MATERIAL HEREIN OR SUBSTANTIAL USE WITHOUT WRITTEN PERMISSION OF THE MARTIN ARCHITECTURAL GROUP VIOLATES THE COPYRIGHT LAWS OF THE UNITED STATES AND WILL BE SUBJECT TO LEGAL PROSECUTION.
©2022, The Martin Architectural Group, P.C.

THE MARTIN ARCHITECTURAL GROUP, P.C.
ARCHITECTS AND LAND PLANNERS
A PROFESSIONAL CORPORATION
240 NORTH 22ND STREET, PHILADELPHIA, PA, 19103
P (215) 665-1600 F (215) 561-5064

| | |
|---|---|
| P.A.: | DREW ROMANIC |
| P.M.: | JASON DECAMPLI |
| DRAWN BY: | Author |
| PROJECT NO: | 1362-12 |

| NO. | REVISION / PERMIT SET | DATE |
|---|---|---|
| 1 | | 12/20/22 |

# ENLARGED CLUB LEVEL 1 PLAN

## Granite Run Apartment 02

MIDDLETOWN TOWNSHIP, PA

SCALE:
DATE: 09/29/22

**A2.02A**

©2022, The Martin Architectural Group, P.C.

Printed: 1/13/2023 4:23:15 PM

ALL REPORTS, PLANS, SPECIFICATIONS AND COMPUTER FILES RELATING TO THIS PROJECT ARE THE PROPERTY OF THE MARTIN ARCHITECTURAL GROUP. THE MARTIN ARCHITECTURAL GROUP RETAINS ALL COMMON LAW, STATUTE AND OTHER RESERVED RIGHTS INCLUDING THE COPYRIGHT THERETO. REPRODUCTION OF THE MATERIAL HEREIN OR SUBSTANTIAL USE WITHOUT WRITTEN PERMISSION OF THE MARTIN ARCHITECTURAL GROUP VIOLATES THE COPYRIGHT LAWS OF THE UNITED STATES AND WILL BE SUBJECT TO LEGAL PROSECUTION.
©2022, The Martin Architectural Group, P.C.

THE MARTIN ARCHITECTURAL GROUP, P.C.
ARCHITECTS AND LAND PLANNERS
A PROFESSIONAL CORPORATION
240 NORTH 22ND STREET, PHILADELPHIA, PA, 19103
P (215) 665-1680 F (215) 561-5664

| | |
|---|---|
| P.A.: | DREW ROMANIC |
| P.M.: | JASON DECAMPLI |
| DRAWN BY: | Author |
| PROJECT NO: | 1362-12 |

| NO. | REVISION | DATE |
|---|---|---|
| 1 | PERMIT SET | 12/20/22 |

# CLUB LEVEL 2 FLOOR PLAN

**Granite Run Apartment 02**

MIDDLETOWN TOWNSHIP, PA

SCALE:

DATE: 06/21/22

**A2.03**

©2022, The Martin Architectural Group, P.C.

GARAGE
(NOT INCLUDED IN THIS SUBMISSION)

STAIR 3 · STAIR 2 · STAIR 5 · STAIR 1 · STAIR 4 · STAIR 7 · STAIR 6

ELV 2 · ELV 1

YOGA C203 · FITNESS C202 · WOMENS C205 · MENS C204 · CLUBROOM C201

POOL EQUIPMENT P102 · POOL STORAGE P101 · STORAGE UNDER DECKING C1004

REFER TO SHEET A2.03A AND LANDSCAPE DRAWINGS FOR MORE INFORMATION ABOUT THIS AREA

POOL TERRACE P100

OPEN TO BELOW

RAMP

CANOPY DRAIN, SEE CIVIL DWG FOR GRADE CONNECTION
CANOPY, TYP.

CANOPY DRAIN TYP, SEE CIVIL DWG FOR GRADE CONNECTION
CANOPY, TYP.

CANOPY DRAIN TYP, SEE CIVIL DWG FOR GRADE CONNECTION
CANOPY, TYP.

83'-10 3/4"

1 CLUB LEVEL 2 RCP
SCALE : 1/16" = 1'-0"

Printed: 1/13/2023 4:23:21 PM

ALL REPORTS, PLANS, SPECIFICATIONS AND COMPUTER FILES RELATING TO THIS PROJECT ARE THE PROPERTY OF THE MARTIN ARCHITECTURAL GROUP. THE MARTIN ARCHITECTURAL GROUP RETAINS ALL COMMON LAW, STATUTE AND OTHER RESERVED RIGHTS INCLUDING THE COPY-RIGHT THERETO. REPRODUCTION OF THE MATERIAL HEREIN OR SUBSTANTIAL USE WITHOUT WRITTEN PERMISSION OF THE MARTIN ARCHITECTURAL GROUP VIOLATES THE COPYRIGHT LAWS OF THE UNITED STATES AND WILL BE SUBJECT TO LEGAL PROSECUTION.
©2022, The Martin Architectural Group, P.C.

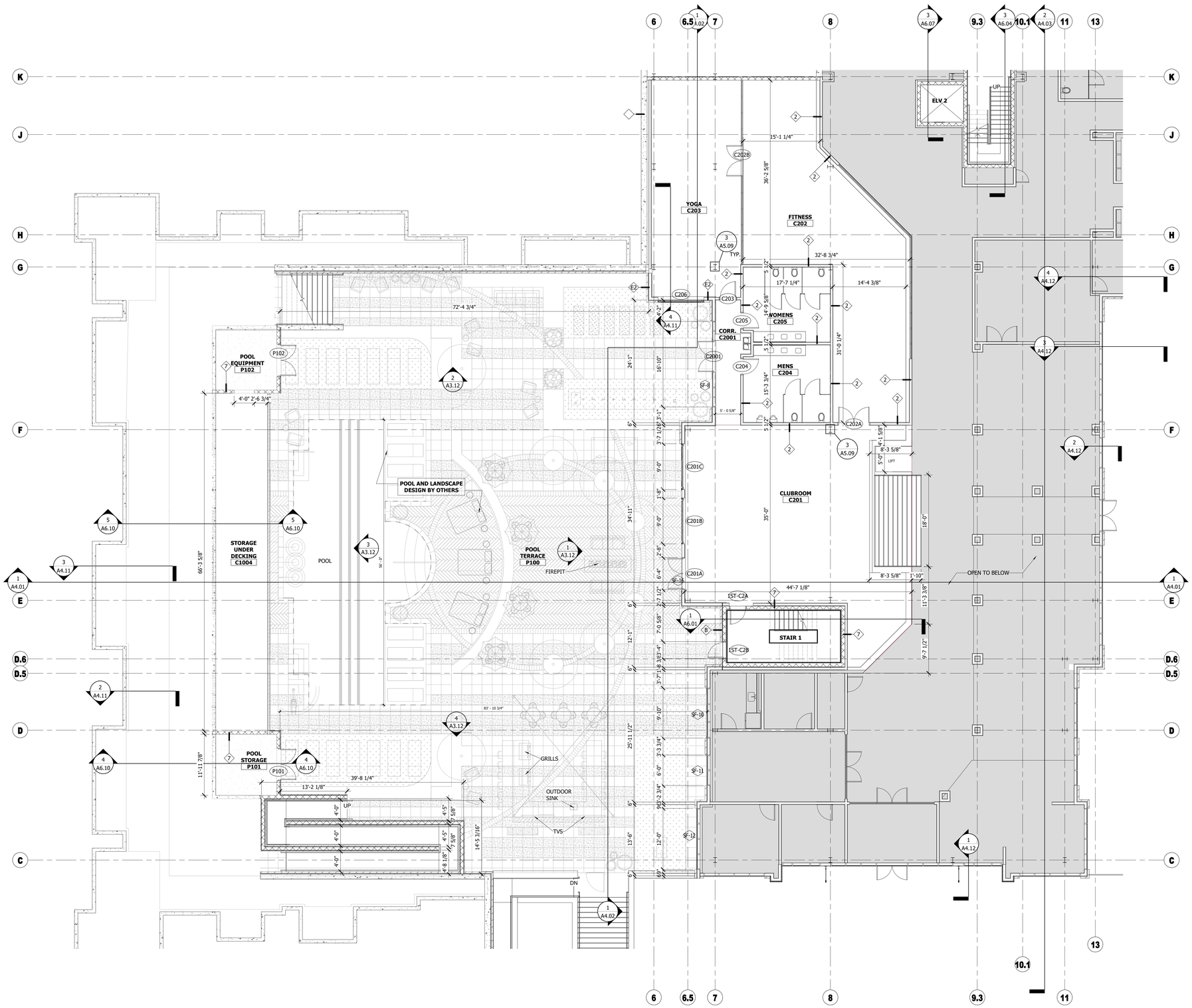


## 1 CLUB LEVEL 2 - ENLARGED PLAN
SCALE : 1/8" = 1'-0"

THE MARTIN ARCHITECTURAL GROUP, P.C.
ARCHITECTS AND LAND PLANNERS
A PROFESSIONAL CORPORATION
240 NORTH 22ND STREET, PHILADELPHIA, PA, 19103
P (215) 665-1600 F (215) 561-5064

| | |
|---|---|
| P.A.: | DREW ROMANIC |
| P.M.: | JASON DECAMPLI |
| DRAWN BY: | Author |
| PROJECT NO: | 1362-12 |

| NO. | REVISION | DATE |
|---|---|---|
| 1 | PERMIT SET | 12/20/22 |

# ENLARGED CLUB LEVEL 2 PLAN
## Granite Run Apartment 02
MIDDLETOWN TOWNSHIP, PA

SCALE:
DATE: 09/29/22

**A2.03A**

©2022, The Martin Architectural Group, P.C.

Printed: 1/13/2023 4:23:26 PM

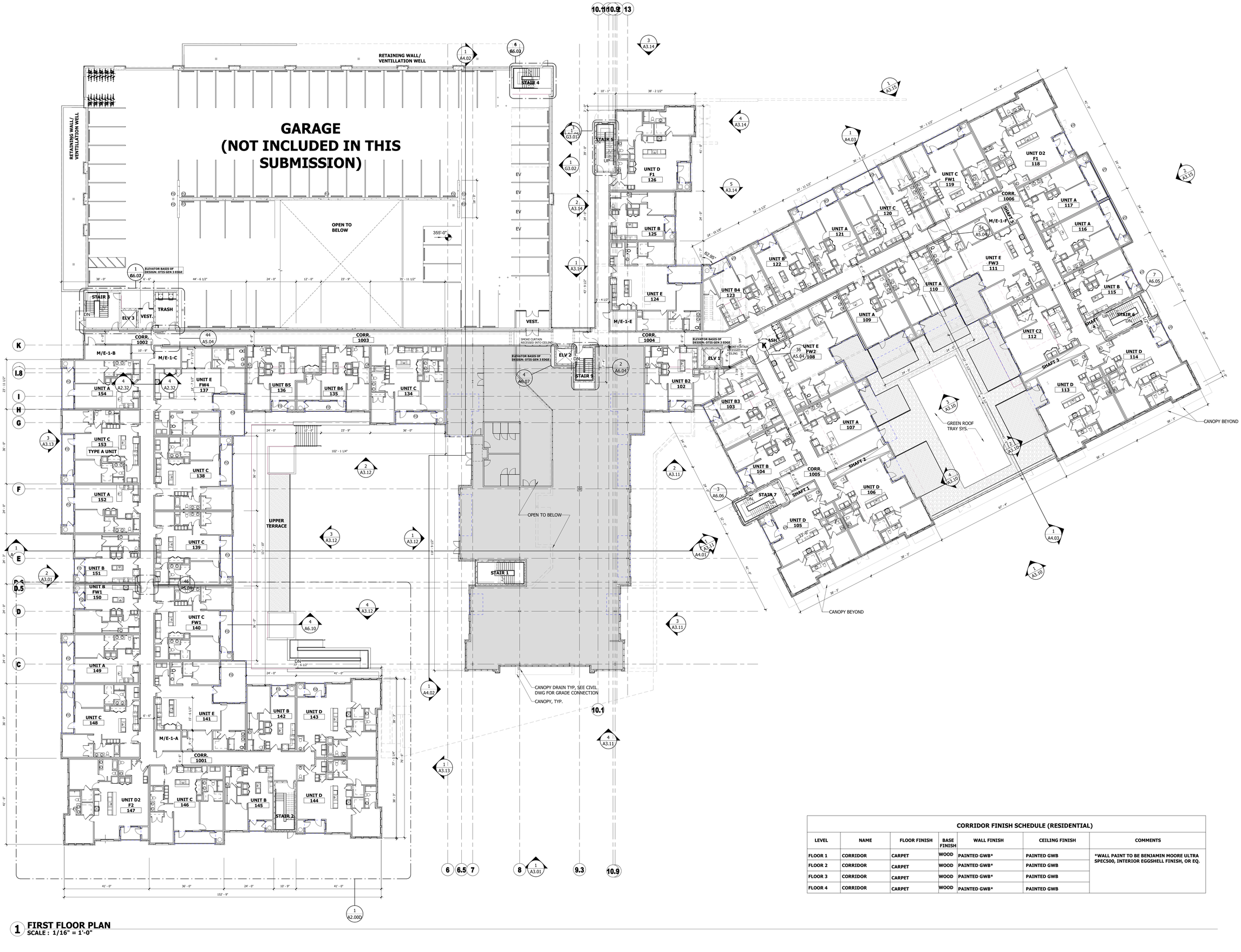


## 1 FIRST FLOOR PLAN
SCALE : 1/16" = 1'-0"

| CORRIDOR FINISH SCHEDULE (RESIDENTIAL) | | | | | | |
|---|---|---|---|---|---|---|
| LEVEL | NAME | FLOOR FINISH | BASE FINISH | WALL FINISH | CEILING FINISH | COMMENTS |
| FLOOR 1 | CORRIDOR | CARPET | WOOD | PAINTED GWB* | PAINTED GWB | *WALL PAINT TO BE BENJAMIN MOORE ULTRA SPEC500, INTERIOR EGGSHELL FINISH, OR EQ. |
| FLOOR 2 | CORRIDOR | CARPET | WOOD | PAINTED GWB* | PAINTED GWB | |
| FLOOR 3 | CORRIDOR | CARPET | WOOD | PAINTED GWB* | PAINTED GWB | |
| FLOOR 4 | CORRIDOR | CARPET | WOOD | PAINTED GWB* | PAINTED GWB | |

ALL REPORTS, PLANS, SPECIFICATIONS AND COMPUTER FILES RELATING TO THIS PROJECT ARE THE PROPERTY OF THE MARTIN ARCHITECTURAL GROUP. THE MARTIN ARCHITECTURAL GROUP RETAINS ALL COMMON LAW, STATUTE AND OTHER RESERVED RIGHTS INCLUDING THE COPYRIGHT THERETO. REPRODUCTION OF THE MATERIAL HEREIN OR SUBSTANTIAL USE WITHOUT WRITTEN PERMISSION OF THE MARTIN ARCHITECTURAL GROUP VIOLATES THE COPYRIGHT LAWS OF THE UNITED STATES AND WILL BE SUBJECT TO LEGAL PROSECUTION.
©2022, The Martin Architectural Group, P.C.

THE MARTIN ARCHITECTURAL GROUP, P.C.
ARCHITECTS AND LAND PLANNERS
A PROFESSIONAL CORPORATION
240 NORTH 22ND STREET, PHILADELPHIA, PA, 19103
P (215) 665-1080 F (215) 561-5064

| | |
|---|---|
| P.A.: | DREW ROMANIC |
| P.M.: | JASON DECAMPLI |
| DRAWN BY: | MAG |
| PROJECT NO: | 1362-12 |

| NO. | REVISION | DATE |
|---|---|---|
| 1 | PERMIT SET | 12/20/22 |

# FIRST FLOOR PLAN
## Granite Run Apartment 02
MIDDLETOWN TOWNSHIP, PA

SCALE: AS NOTED
DATE: 12/31/2017

# A2.04
©2022, The Martin Architectural Group, P.C.

Printed: 1/13/2023 4:24:48 PM

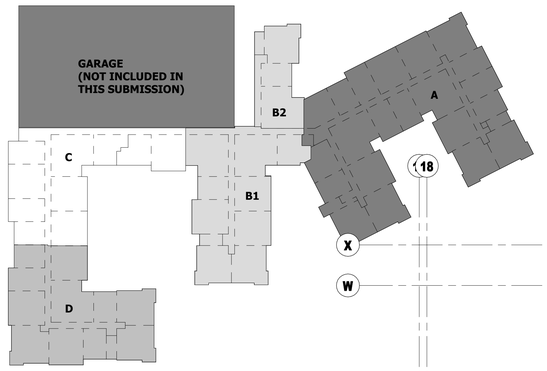


**BUILDING KEY PLAN**
SCALE : 1/64" = 1'-0"

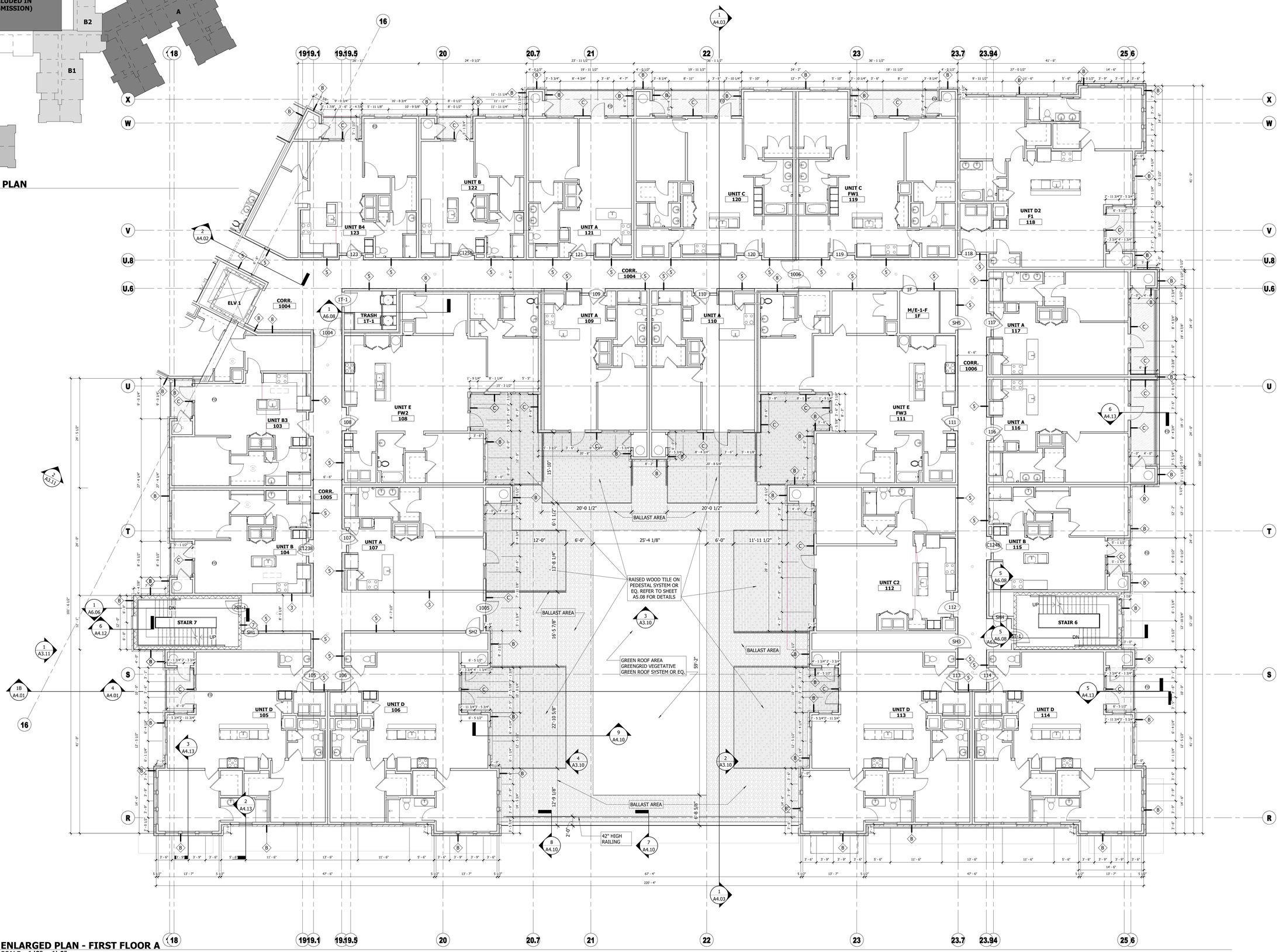


**1 ENLARGED PLAN - FIRST FLOOR A**
SCALE : 1/8" = 1'-0"

ALL REPORTS, PLANS, SPECIFICATIONS AND COMPUTER FILES RELATING TO THIS PROJECT ARE THE PROPERTY OF THE MARTIN ARCHITECTURAL GROUP. THE MARTIN ARCHITECTURAL GROUP RETAINS ALL COMMON LAW, STATUTE AND OTHER RESERVED RIGHTS INCLUDING THE COPYRIGHT THERETO. REPRODUCTION OF THE MATERIAL HEREIN OR SUBSTANTIAL USE WITHOUT WRITTEN PERMISSION OF THE MARTIN ARCHITECTURAL GROUP VIOLATES THE COPYRIGHT LAWS OF THE UNITED STATES AND WILL BE SUBJECT TO LEGAL PROSECUTION.
©2022, The Martin Architectural Group, P.C.




THE MARTIN ARCHITECTURAL GROUP, P.C.
ARCHITECTS AND LAND PLANNERS
A PROFESSIONAL CORPORATION
240 NORTH 22ND STREET, PHILADELPHIA, PA, 19103
P (215) 665-1080 F (215) 561-5064

| | |
|---|---|
| P.A.: | DREW ROMANIC |
| P.M.: | JASON DECAMPLI |
| DRAWN BY: | Author |
| PROJECT NO: | 1362-12 |

| NO. | REVISION | DATE |
|---|---|---|
| 1 | PERMIT SET | 12/20/22 |

# ENLARGED FIRST FLOOR PLAN A
## Granite Run Apartment 02

MIDDLETOWN TOWNSHIP, PA

SCALE:
DATE: 08/05/22

# A2.04A

©2022, The Martin Architectural Group, P.C.

Printed: 1/13/2023 4:25:02 PM




**BUILDING KEY PLAN**
SCALE : 1/64" = 1'-0"

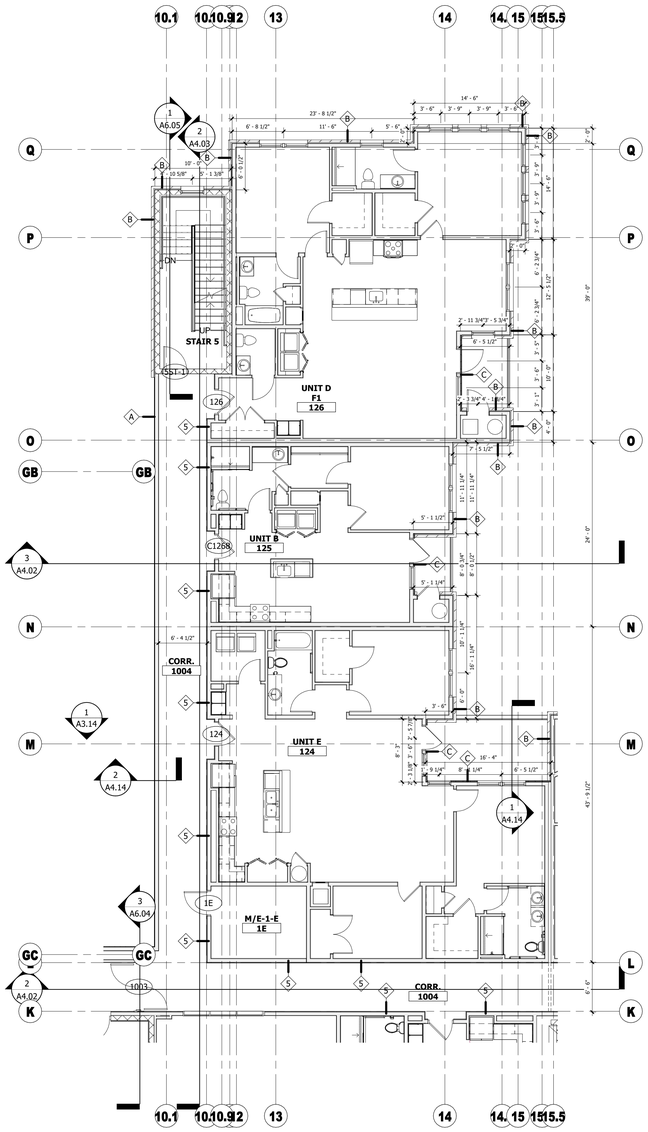


**2 ENLARGED PLAN - FIRST FLOOR B2**
SCALE : 1/8" = 1'-0"

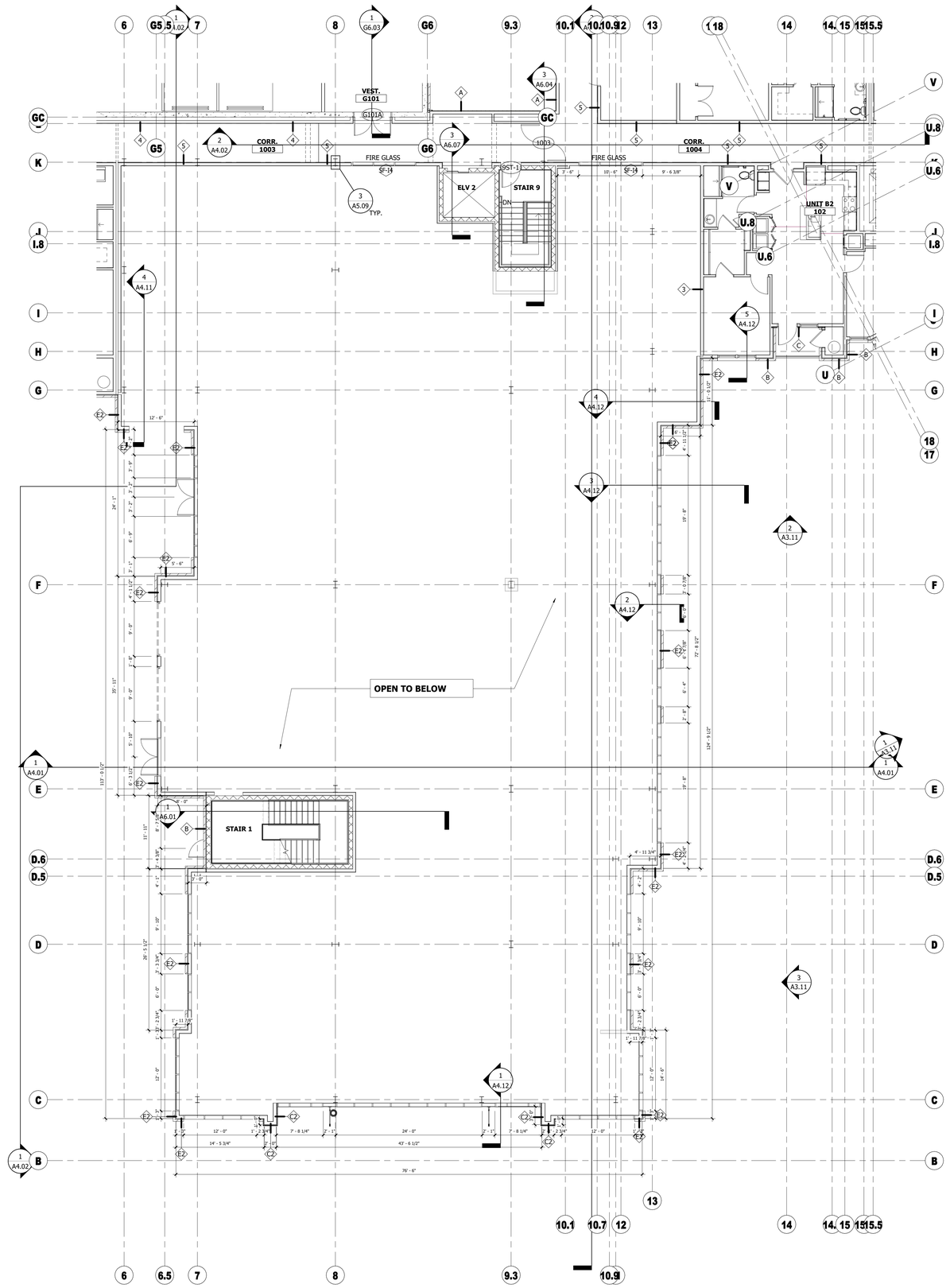


**1 ENLARGED PLAN - FIRST FLOOR B1**
SCALE : 1/8" = 1'-0"

ALL REPORTS, PLANS, SPECIFICATIONS AND COMPUTER FILES RELATING TO THIS PROJECT ARE THE PROPERTY OF THE MARTIN ARCHITECTURAL GROUP. THE MARTIN ARCHITECTURAL GROUP RETAINS ALL COMMON LAW, STATUTE AND OTHER RESERVED RIGHTS INCLUDING THE COPYRIGHT THERETO. REPRODUCTION OF THE MATERIAL HEREIN OR SUBSTANTIAL USE WITHOUT WRITTEN PERMISSION OF THE MARTIN ARCHITECTURAL GROUP VIOLATES THE COPYRIGHT LAWS OF THE UNITED STATES AND WILL BE SUBJECT TO LEGAL PROSECUTION.
©2022, The Martin Architectural Group, P.C.




THE MARTIN ARCHITECTURAL GROUP, P.C.
ARCHITECTS AND LAND PLANNERS
A PROFESSIONAL CORPORATION
240 NORTH 22ND STREET, PHILADELPHIA, PA, 19103
P (215) 665-1080 F (215) 561-5064

| | |
|---|---|
| P.A.: | DREW ROMANIC |
| P.M.: | JASON DECAMPLI |
| DRAWN BY: | Author |
| PROJECT NO: | 1362-12 |

| NO. | REVISION | DATE |
|---|---|---|
| 1 | PERMIT SET | 12/20/22 |

# ENLARGED FIRST FLOOR PLAN B
## Granite Run Apartment 02

MIDDLETOWN TOWNSHIP, PA

SCALE:
DATE: 08/05/22

**A2.04B**

©2022, The Martin Architectural Group, P.C.

Printed: 1/13/2023 4:25:08 PM




**BUILDING KEY PLAN**
SCALE : 1/64" = 1'-0"

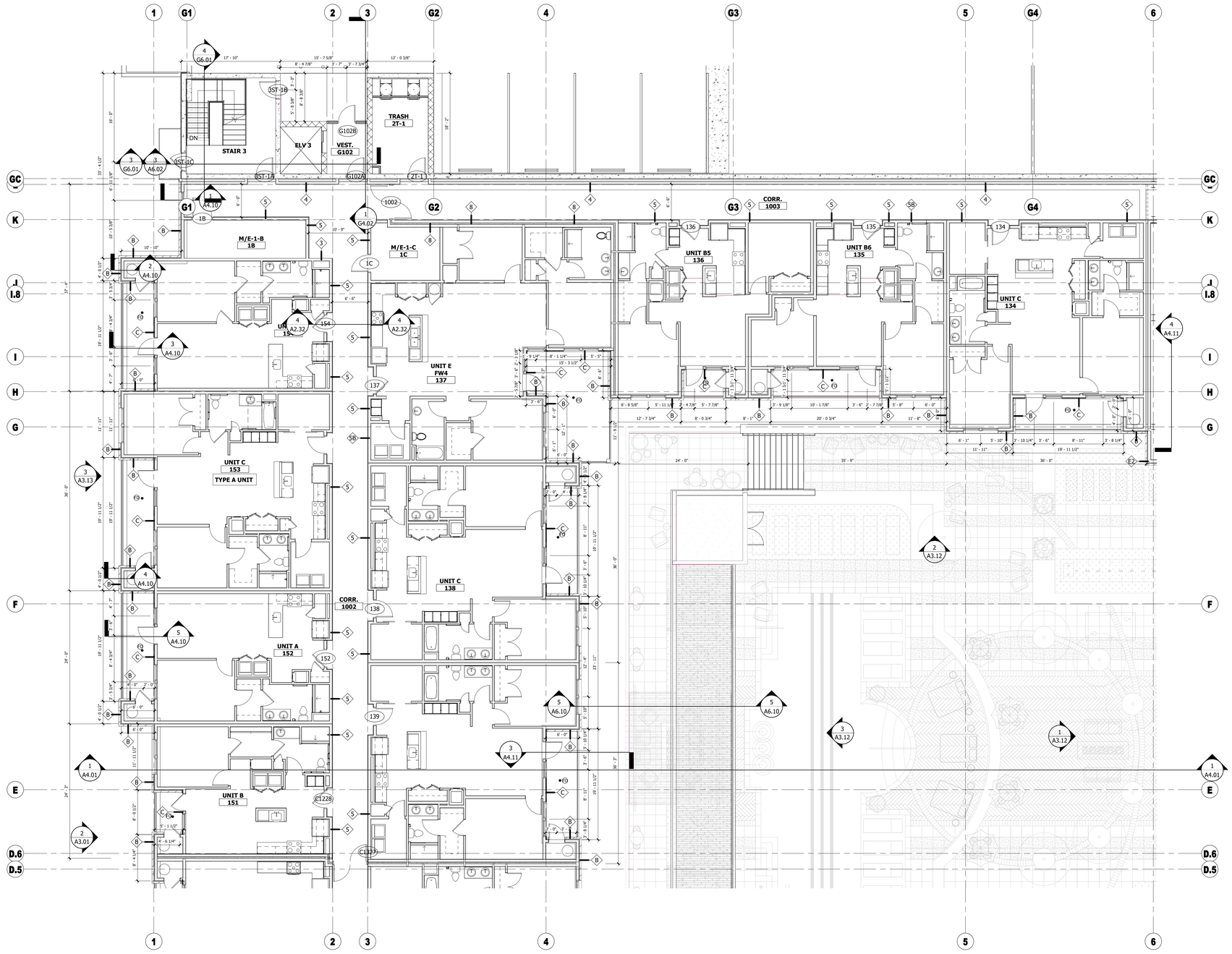


**1 ENLARGED PLAN - FIRST FLOOR C**
SCALE : 1/8" = 1'-0"

ALL REPORTS, PLANS, SPECIFICATIONS AND COMPUTER FILES RELATING TO THIS PROJECT ARE THE PROPERTY OF THE MARTIN ARCHITECTURAL GROUP. THE MARTIN ARCHITECTURAL GROUP RETAINS ALL COMMON LAW, STATUTE AND OTHER RESERVED RIGHTS INCLUDING THE COPYRIGHT THERETO. REPRODUCTION OF THE MATERIAL HEREIN OR SUBSTANTIAL USE WITHOUT WRITTEN PERMISSION OF THE MARTIN ARCHITECTURAL GROUP VIOLATES THE COPYRIGHT LAWS OF THE UNITED STATES AND WILL BE SUBJECT TO LEGAL PROSECUTION.
©2022, The Martin Architectural Group, P.C.




THE MARTIN ARCHITECTURAL GROUP, P.C.
ARCHITECTS AND LAND PLANNERS
A PROFESSIONAL CORPORATION
240 NORTH 22ND STREET, PHILADELPHIA, PA, 19103
P (215) 665-1080 F (215) 561-5064

| | |
|---|---|
| P.A.: | DREW ROMANIC |
| P.M.: | JASON DECAMPLI |
| DRAWN BY: | Author |
| PROJECT NO: | 1362-12 |

| NO. | REVISION | DATE |
|---|---|---|
| 1 | PERMIT SET | 12/20/22 |

# ENLARGED FIRST FLOOR PLAN C
## Granite Run Apartment 02

MIDDLETOWN TOWNSHIP, PA

SCALE:
DATE: 08/05/22

# A2.04C

©2022, The Martin Architectural Group, P.C.

Printed: 1/13/2023 4:25:14 PM




**BUILDING KEY PLAN**
SCALE : 1/64" = 1'-0"

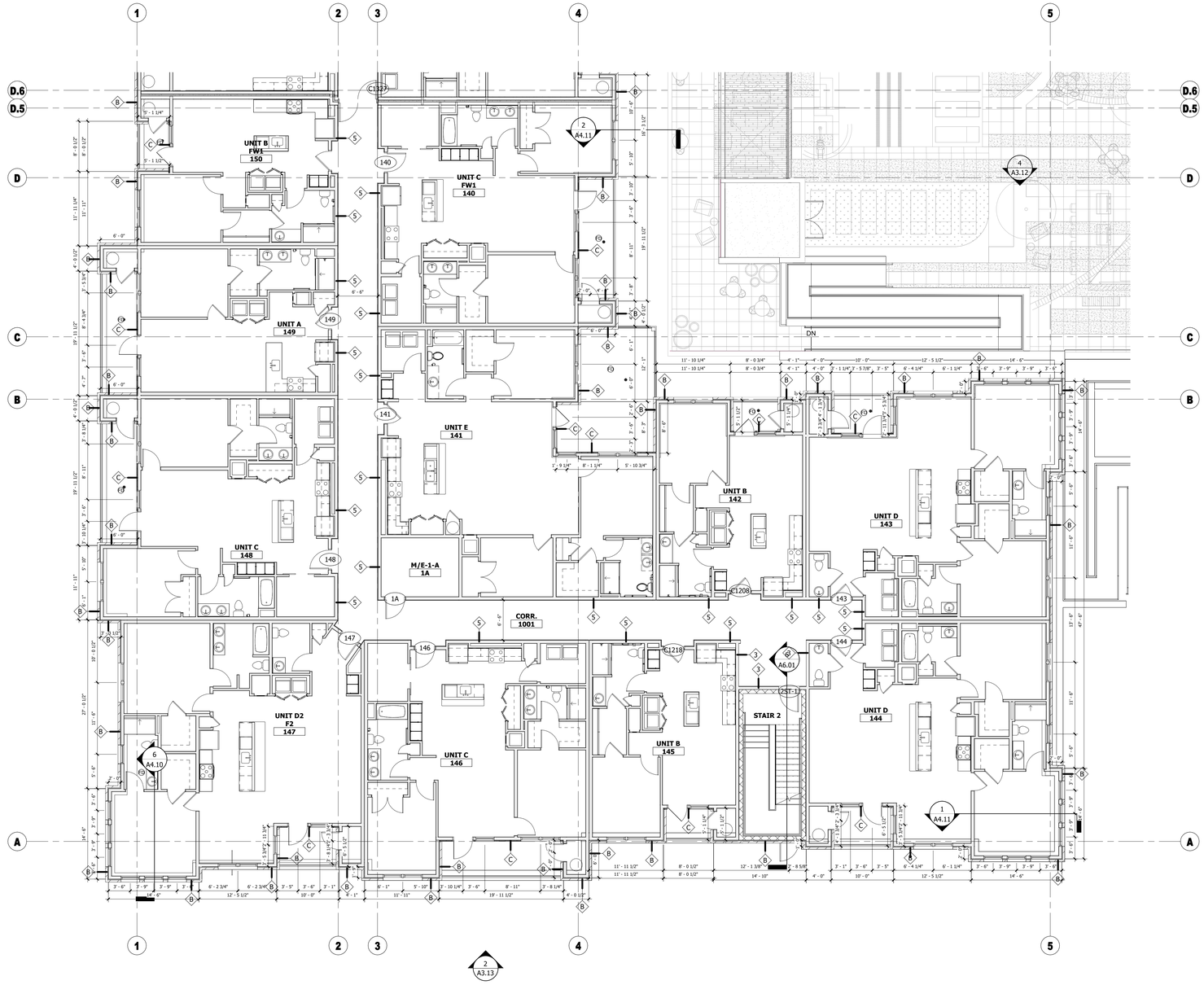


**1 ENLARGED PLAN - FIRST FLOOR D**
SCALE : 1/8" = 1'-0"

ALL REPORTS, PLANS, SPECIFICATIONS AND COMPUTER FILES RELATING TO THIS PROJECT ARE THE PROPERTY OF THE MARTIN ARCHITECTURAL GROUP. THE MARTIN ARCHITECTURAL GROUP RETAINS ALL COMMON LAW, STATUTE AND OTHER RESERVED RIGHTS INCLUDING THE COPYRIGHT THERETO. REPRODUCTION OF THE MATERIAL HEREIN OR SUBSTANTIAL USE WITHOUT WRITTEN PERMISSION OF THE MARTIN ARCHITECTURAL GROUP VIOLATES THE COPYRIGHT LAWS OF THE UNITED STATES AND WILL BE SUBJECT TO LEGAL PROSECUTION.
©2022, The Martin Architectural Group, P.C.




THE MARTIN ARCHITECTURAL GROUP, P.C.
ARCHITECTS AND LAND PLANNERS
A PROFESSIONAL CORPORATION
240 NORTH 22ND STREET, PHILADELPHIA, PA, 19103
P (215) 665-1080 F (215) 561-5064

| | |
|---|---|
| P.A.: | DREW ROMANIC |
| P.M.: | JASON DECAMPLI |
| DRAWN BY: | Author |
| PROJECT NO: | 1362-12 |

| NO. | REVISION | DATE |
|---|---|---|
| 1 | PERMIT SET | 12/20/22 |

ENLARGED FIRST FLOOR PLAN D
**Granite Run Apartment 02**
MIDDLETOWN TOWNSHIP, PA

SCALE:
DATE: 08/05/22

**A2.04D**

©2022, The Martin Architectural Group, P.C.

Printed: 1/13/2023 4:25:20 PM

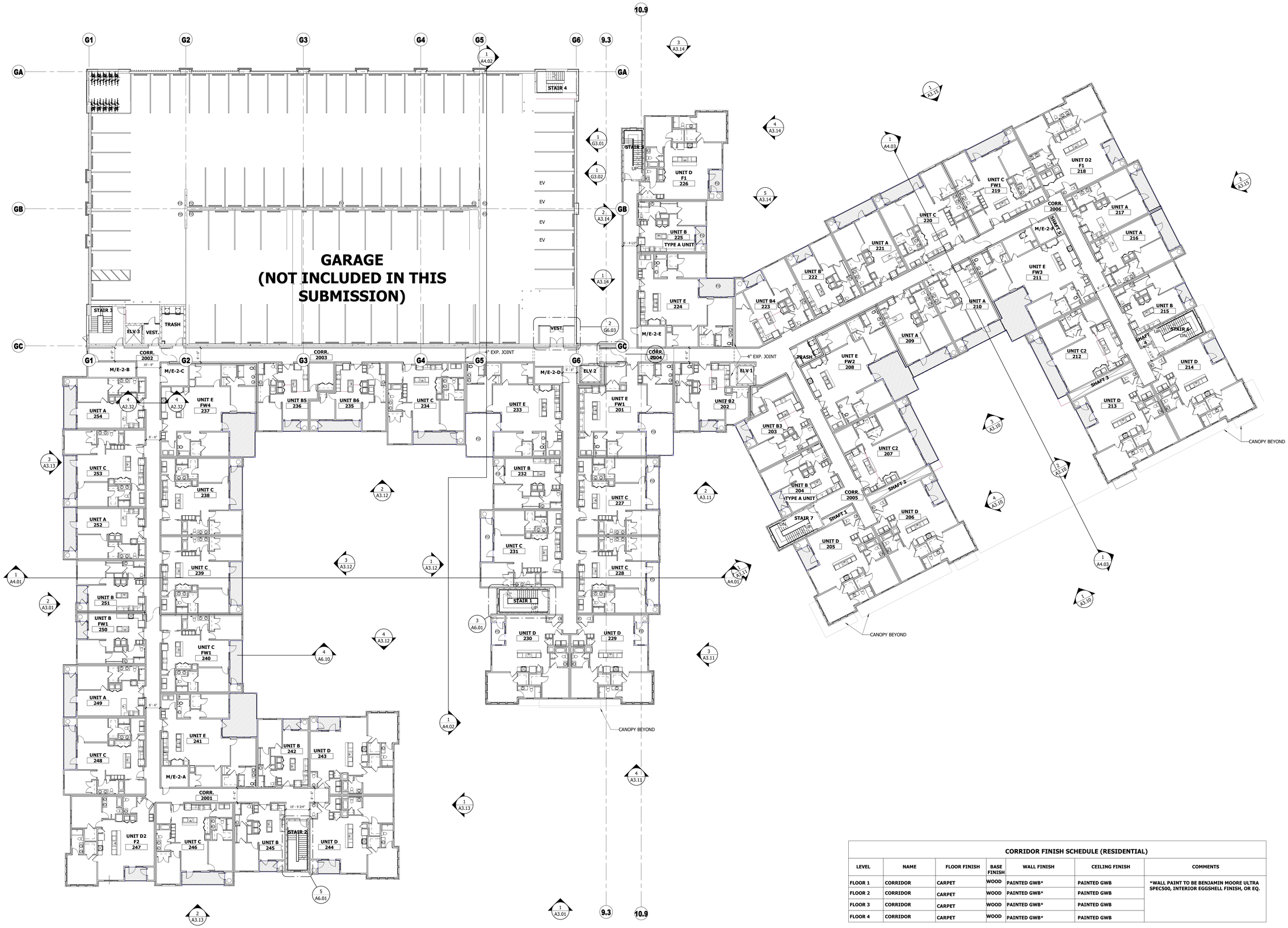


## 1 SECOND FLOOR PLAN
SCALE : 1/16" = 1'-0"

### CORRIDOR FINISH SCHEDULE (RESIDENTIAL)

| LEVEL | NAME | FLOOR FINISH | BASE FINISH | WALL FINISH | CEILING FINISH | COMMENTS |
|---|---|---|---|---|---|---|
| FLOOR 1 | CORRIDOR | CARPET | WOOD | PAINTED GWB* | PAINTED GWB | *WALL PAINT TO BE BENJAMIN MOORE ULTRA SPEC500, INTERIOR EGGSHELL FINISH, OR EQ. |
| FLOOR 2 | CORRIDOR | CARPET | WOOD | PAINTED GWB* | PAINTED GWB | |
| FLOOR 3 | CORRIDOR | CARPET | WOOD | PAINTED GWB* | PAINTED GWB | |
| FLOOR 4 | CORRIDOR | CARPET | WOOD | PAINTED GWB* | PAINTED GWB | |

ALL REPORTS, PLANS, SPECIFICATIONS AND COMPUTER FILES RELATING TO THIS PROJECT ARE THE PROPERTY OF THE MARTIN ARCHITECTURAL GROUP. THE MARTIN ARCHITECTURAL GROUP RETAINS ALL COMMON LAW, STATUTE AND OTHER RESERVED RIGHTS INCLUDING THE COPYRIGHT THERETO. REPRODUCTION OF THE MATERIAL HEREIN OR SUBSTANTIAL USE WITHOUT WRITTEN PERMISSION OF THE MARTIN ARCHITECTURAL GROUP VIOLATES THE COPYRIGHT LAWS OF THE UNITED STATES AND WILL BE SUBJECT TO LEGAL PROSECUTION.
©2022, The Martin Architectural Group, P.C.

REGISTERED ARCHITECT COMMONWEALTH OF PENNSYLVANIA DREW ROMANIC No. RA409078

Professi
I hereby prepare to the laws of

NIC

Professi License Expirati

THE MARTIN ARCHITECTURAL GROUP, P.C.
ARCHITECTS AND LAND PLANNERS
A PROFESSIONAL CORPORATION
240 NORTH 22ND STREET, PHILADELPHIA, PA, 19103
P (215) 665-1080 F (215) 561-5064

| | |
|---|---|
| P.A.: | DREW ROMANIC |
| P.M.: | JASON DECAMPLI |
| DRAWN BY: | MAG |
| PROJECT NO: | 1362-12 |

| NO. | REVISION | DATE |
|---|---|---|
| 1 | PERMIT SET | 12/20/22 |

# SECOND FLOOR PLAN
## Granite Run Apartment 02
MIDDLETOWN TOWNSHIP, PA

SCALE: AS NOTED
DATE: 12/31/2017

**A2.05**

©2022, The Martin Architectural Group, P.C.

Printed: 1/13/2023 4:25:36 PM

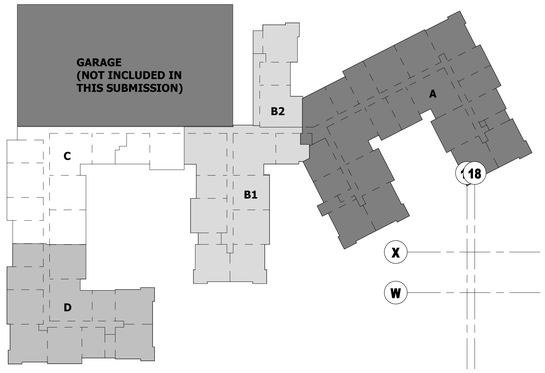


**BUILDING KEY PLAN**
SCALE : 1/64" = 1'-0"

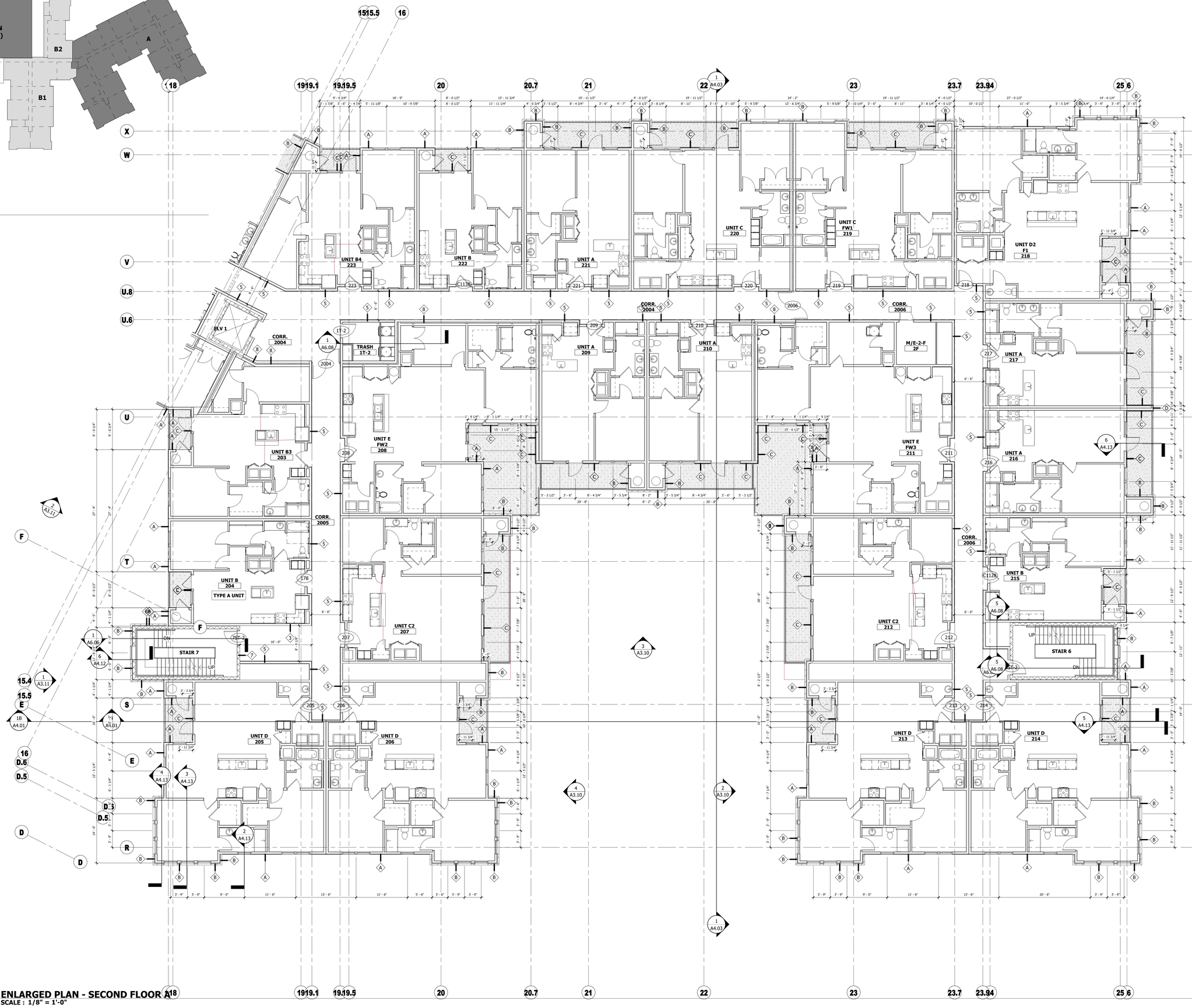


**1 ENLARGED PLAN - SECOND FLOOR A**
SCALE : 1/8" = 1'-0"

ALL REPORTS, PLANS, SPECIFICATIONS AND COMPUTER FILES RELATING TO THIS PROJECT ARE THE PROPERTY OF THE MARTIN ARCHITECTURAL GROUP. THE MARTIN ARCHITECTURAL GROUP RETAINS ALL COMMON LAW, STATUTE AND OTHER RESERVED RIGHTS INCLUDING THE COPYRIGHT THERETO. REPRODUCTION OF THE MATERIAL HEREIN OR SUBSTANTIAL USE WITHOUT WRITTEN PERMISSION OF THE MARTIN ARCHITECTURAL GROUP VIOLATES THE COPYRIGHT LAWS OF THE UNITED STATES AND WILL BE SUBJECT TO LEGAL PROSECUTION.
©2022, The Martin Architectural Group, P.C.




THE MARTIN ARCHITECTURAL GROUP, P.C.
ARCHITECTS AND LAND PLANNERS
A PROFESSIONAL CORPORATION
240 NORTH 22ND STREET, PHILADELPHIA, PA, 19103
P (215) 665-1080 F (215) 561-5064

| | |
|---|---|
| P.A.: | DREW ROMANIC |
| P.M.: | JASON DECAMPLI |
| DRAWN BY: | Author |
| PROJECT NO: | 1362-12 |

| NO. | REVISION | DATE |
|---|---|---|
| 1 | PERMIT SET | 12/20/22 |

# ENLARGED SECOND FLOOR PLAN A
## Granite Run Apartment 02

MIDDLETOWN TOWNSHIP, PA

SCALE:
DATE: 08/05/22

# A2.05A

©2022, The Martin Architectural Group, P.C.

Printed: 1/13/2023 4:25:48 PM




**BUILDING KEY PLAN**
SCALE : 1/64" = 1'-0"

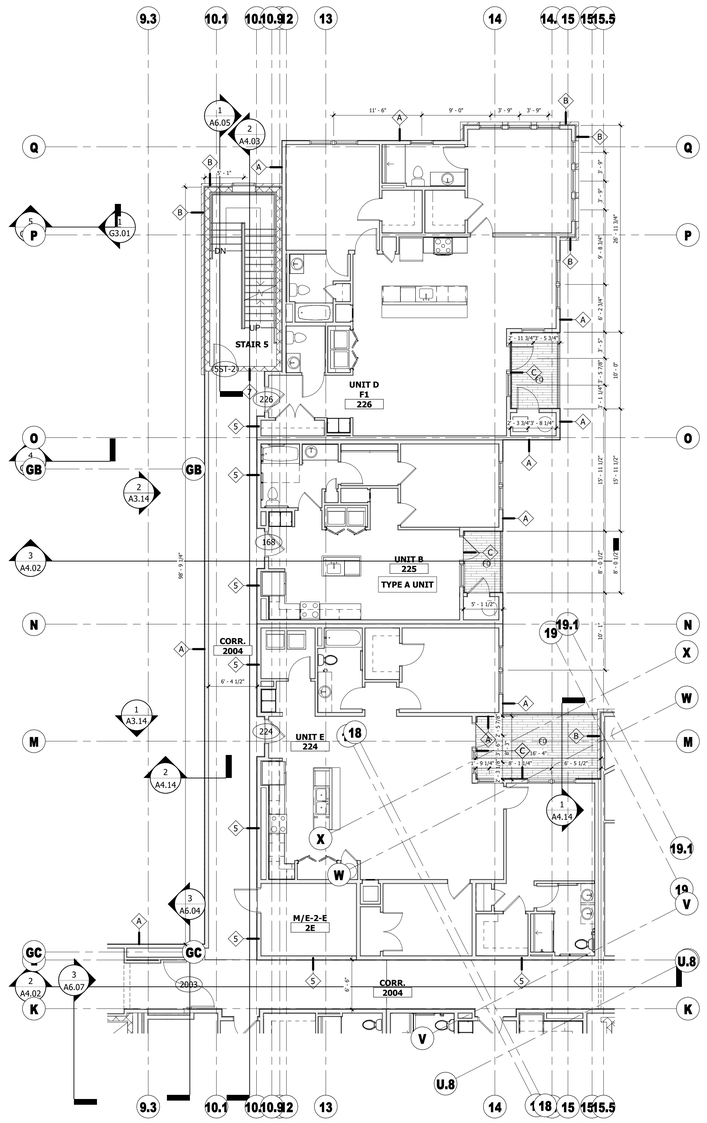


**2 ENLARGED PLAN - SECOND FLOOR B2**
SCALE : 1/8" = 1'-0"

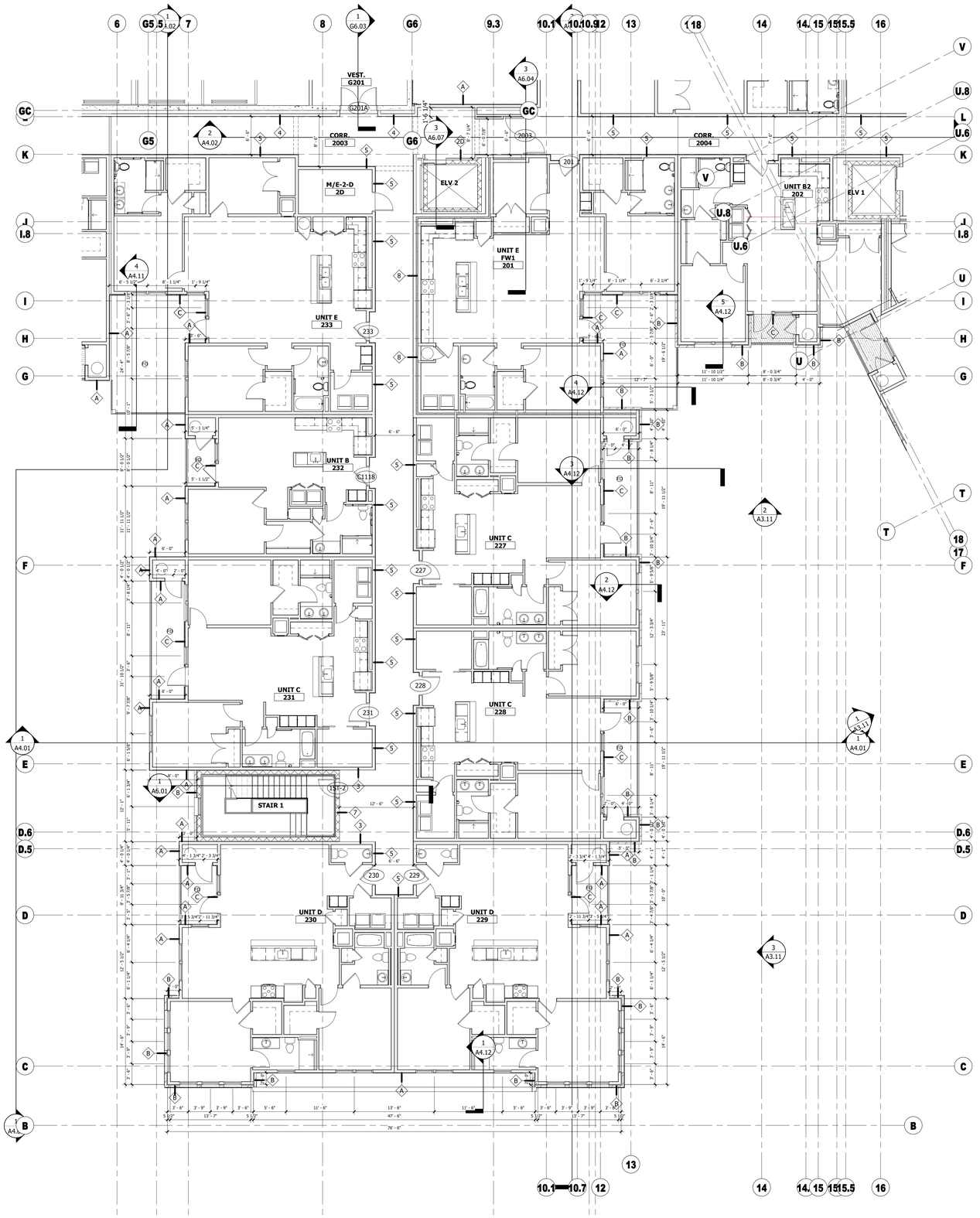


**1 ENLARGED PLAN - SECOND FLOOR B1**
SCALE : 1/8" = 1'-0"

ALL REPORTS, PLANS, SPECIFICATIONS AND COMPUTER FILES RELATING TO THIS PROJECT ARE THE PROPERTY OF THE MARTIN ARCHITECTURAL GROUP. THE MARTIN ARCHITECTURAL GROUP RETAINS ALL COMMON LAW, STATUTE AND OTHER RESERVED RIGHTS INCLUDING THE COPYRIGHT THERETO. REPRODUCTION OF THE MATERIAL HEREIN OR SUBSTANTIAL USE WITHOUT WRITTEN PERMISSION OF THE MARTIN ARCHITECTURAL GROUP VIOLATES THE COPYRIGHT LAWS OF THE UNITED STATES AND WILL BE SUBJECT TO LEGAL PROSECUTION.
©2022, The Martin Architectural Group, P.C.




THE MARTIN ARCHITECTURAL GROUP, P.C.
ARCHITECTS AND LAND PLANNERS
A PROFESSIONAL CORPORATION
240 NORTH 22ND STREET, PHILADELPHIA, PA, 19103
P (215) 665-1080 F (215) 561-5064

| | |
|---|---|
| P.A.: | DREW ROMANIC |
| P.M.: | JASON DECAMPLI |
| DRAWN BY: | Author |
| PROJECT NO: | 1362-12 |

| NO. | REVISION | DATE |
|---|---|---|
| 1 | PERMIT SET | 12/20/22 |

# ENLARGED SECOND FLOOR PLAN B
## Granite Run Apartment 02

MIDDLETOWN TOWNSHIP, PA

SCALE:
DATE: 08/05/22

**A2.05B**

©2022, The Martin Architectural Group, P.C.

Printed: 1/13/2023 4:25:56 PM




**BUILDING KEY PLAN**
SCALE : 1/64" = 1'-0"

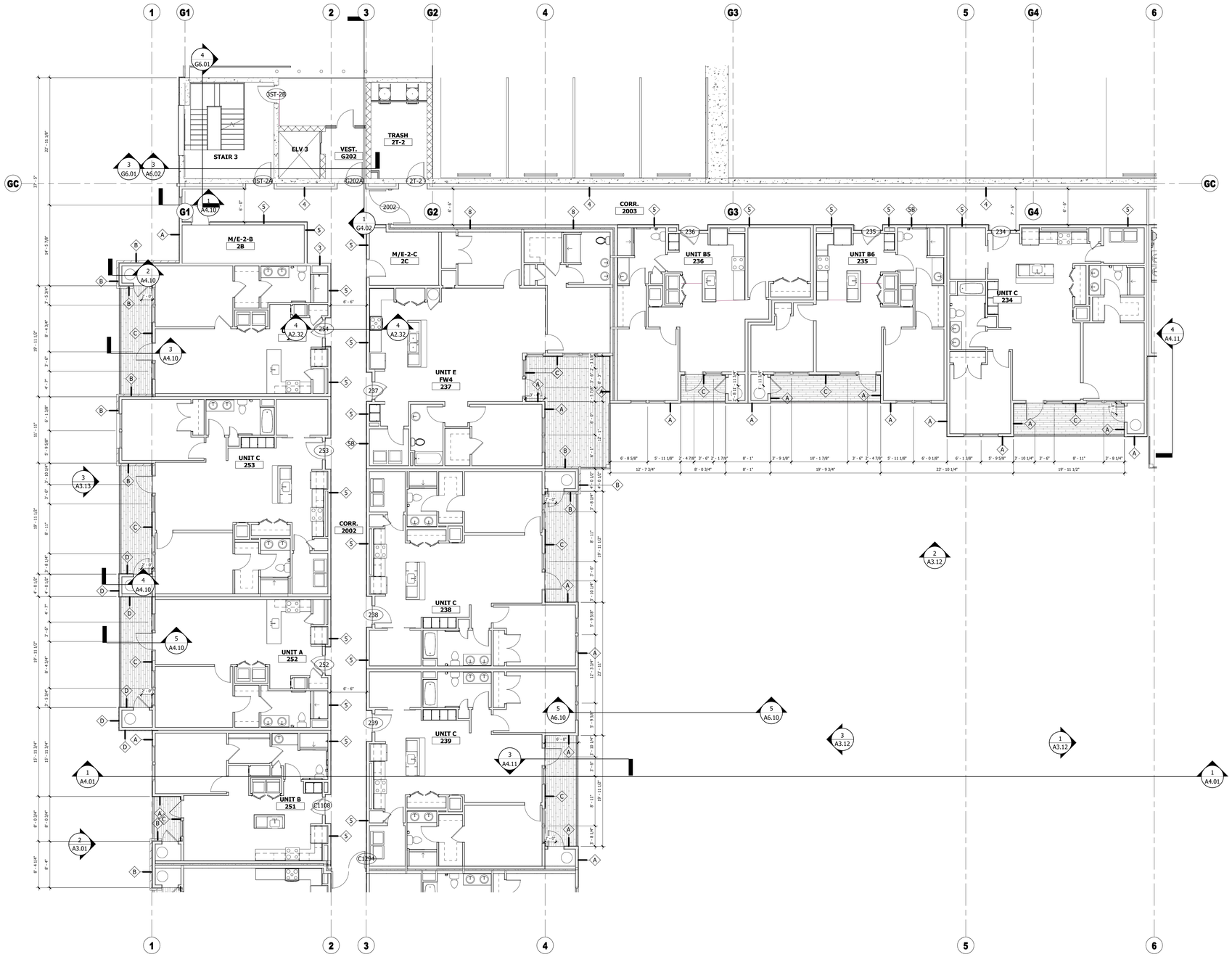


**1 ENLARGED PLAN - SECOND FLOOR C**
SCALE : 1/8" = 1'-0"

ALL REPORTS, PLANS, SPECIFICATIONS AND COMPUTER FILES RELATING TO THIS PROJECT ARE THE PROPERTY OF THE MARTIN ARCHITECTURAL GROUP. THE MARTIN ARCHITECTURAL GROUP RETAINS ALL COMMON LAW, STATUTE AND OTHER RESERVED RIGHTS INCLUDING THE COPYRIGHT THERETO. REPRODUCTION OF THE MATERIAL HEREIN OR SUBSTANTIAL USE WITHOUT WRITTEN PERMISSION OF THE MARTIN ARCHITECTURAL GROUP VIOLATES THE COPYRIGHT LAWS OF THE UNITED STATES AND WILL BE SUBJECT TO LEGAL PROSECUTION.
©2022, The Martin Architectural Group, P.C.




THE MARTIN ARCHITECTURAL GROUP, P.C.
ARCHITECTS AND LAND PLANNERS
A PROFESSIONAL CORPORATION
240 NORTH 22ND STREET, PHILADELPHIA, PA, 19103
P (215) 665-1080 F (215) 561-5064

| | |
|---|---|
| P.A.: | DREW ROMANIC |
| P.M.: | JASON DECAMPLI |
| DRAWN BY: | Author |
| PROJECT NO: | 1362-12 |

| NO. | REVISION | DATE |
|---|---|---|
| 1 | PERMIT SET | 12/20/22 |

# ENLARGED SECOND FLOOR PLAN C
## Granite Run Apartment 02

MIDDLETOWN TOWNSHIP, PA

SCALE:
DATE: 08/05/22

**A2.05C**

©2022, The Martin Architectural Group, P.C.

Printed: 1/13/2023 4:26:02 PM




## BUILDING KEY PLAN
SCALE : 1/64" = 1'-0"

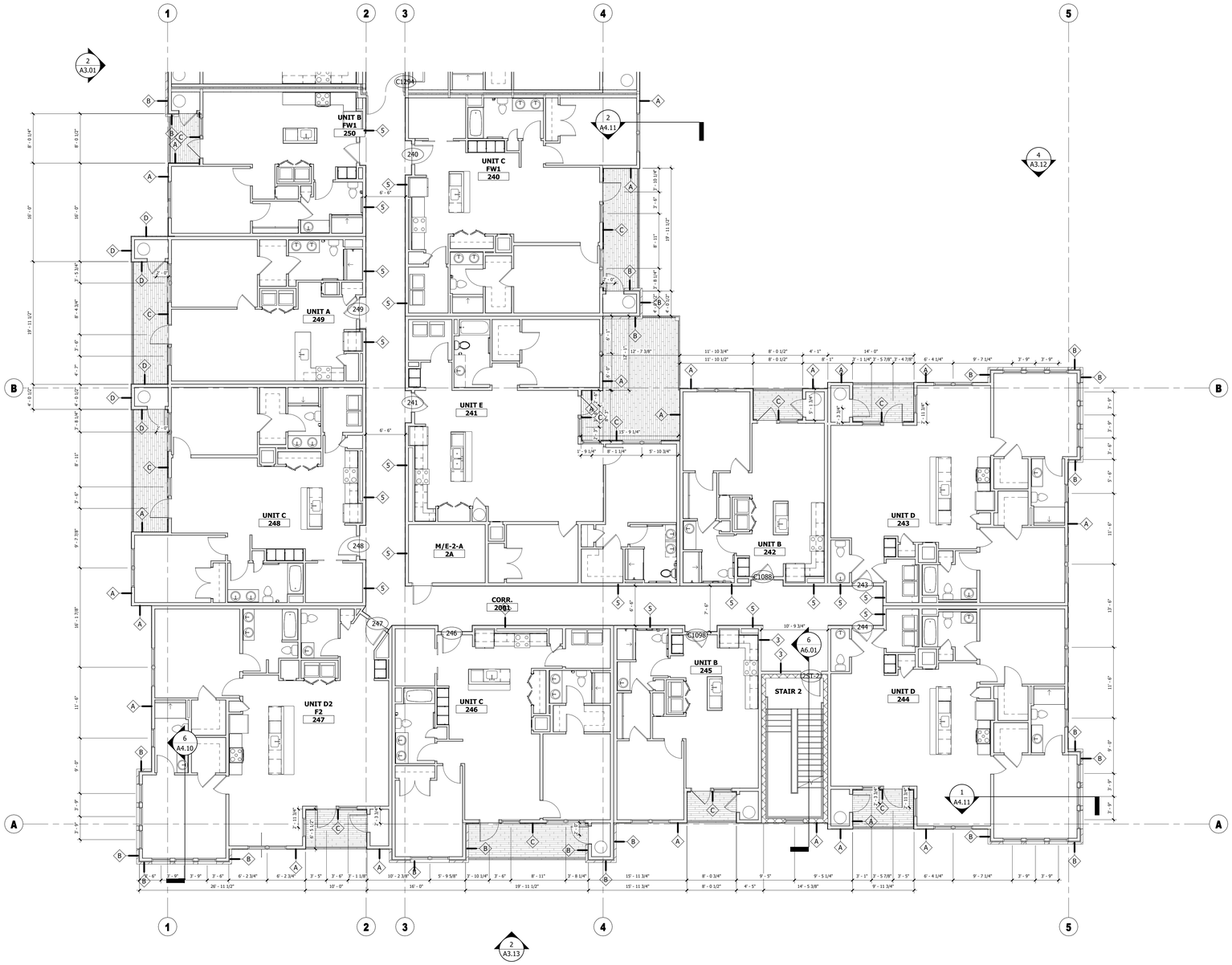


## 1 ENLARGED PLAN - SECOND FLOOR D
SCALE : 1/8" = 1'-0"

ALL REPORTS, PLANS, SPECIFICATIONS AND COMPUTER FILES RELATING TO THIS PROJECT ARE THE PROPERTY OF THE MARTIN ARCHITECTURAL GROUP. THE MARTIN ARCHITECTURAL GROUP RETAINS ALL COMMON LAW, STATUTE AND OTHER RESERVED RIGHTS INCLUDING THE COPY-RIGHT THERETO. REPRODUCTION OF THE MATERIAL HEREIN OR SUBSTANTIAL USE WITHOUT WRITTEN PERMISSION OF THE MARTIN ARCHITECTURAL GROUP VIOLATES THE COPYRIGHT LAWS OF THE UNITED STATES AND WILL BE SUBJECT TO LEGAL PROSECUTION.
©2022, The Martin Architectural Group, P.C.

REGISTERED ARCHITECT
COMMONWEALTH OF PENNSYLVANIA
DREW ROMANIC No. RA-020015

THE MARTIN ARCHITECTURAL GROUP, P.C.
ARCHITECTS AND LAND PLANNERS
A PROFESSIONAL CORPORATION
240 NORTH 22ND STREET, PHILADELPHIA, PA, 19103
P (215) 665-1680 F (215) 561-5064

| | |
|---|---|
| P.A.: | DREW ROMANIC |
| P.M.: | JASON DECAMPLI |
| DRAWN BY: | Author |
| PROJECT NO: | 1362-12 |

| NO. | REVISION | DATE |
|---|---|---|
| 1 | PERMIT SET | 12/20/22 |

# ENLARGED SECOND FLOOR PLAN
## Granite Run Apartment 02
MIDDLETOWN TOWNSHIP, PA

SCALE:
DATE: 08/05/22

**A2.05D**

©2022, The Martin Architectural Group, P.C.

Printed: 1/13/2023 4:26:07 PM

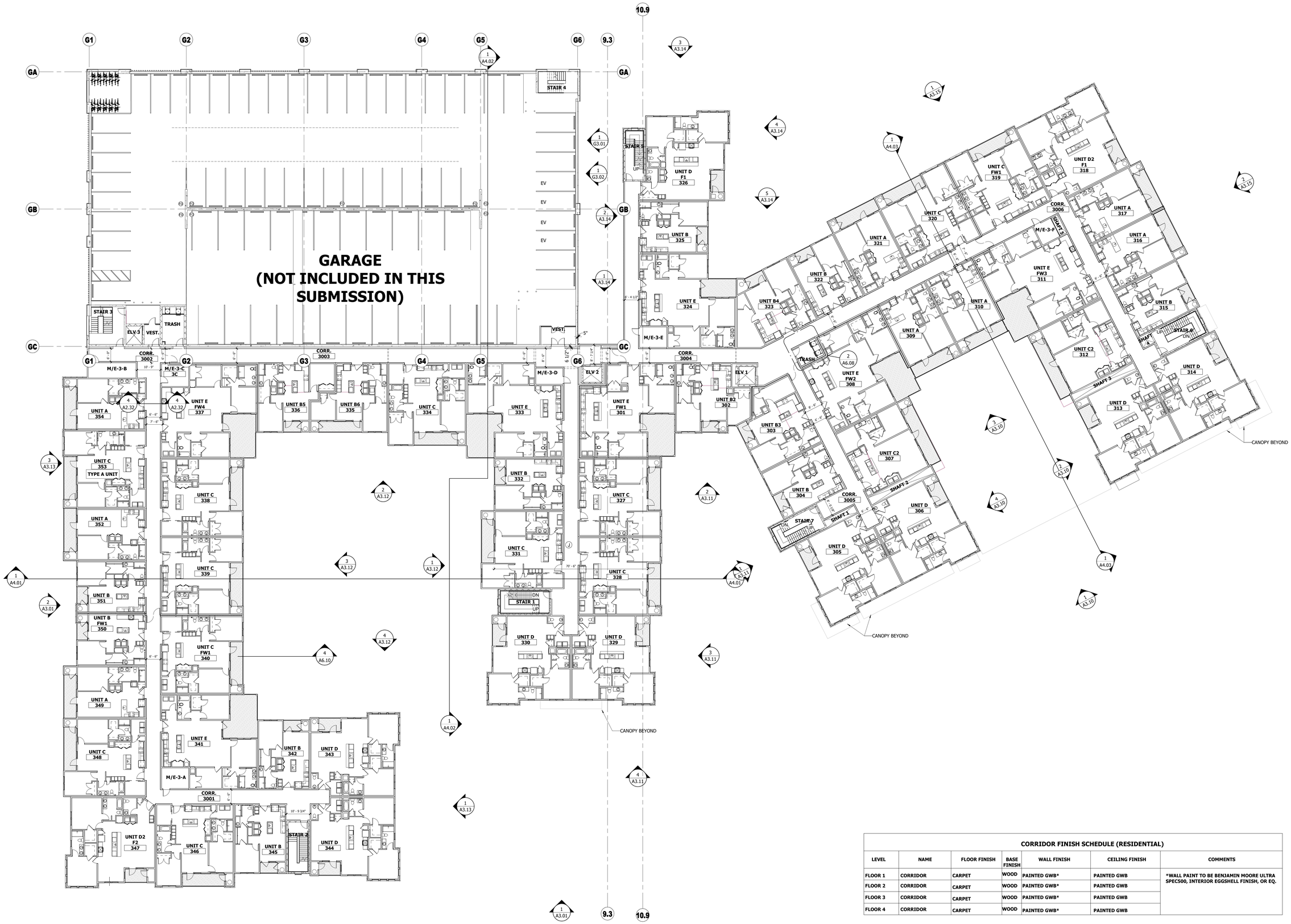


## 1 THIRD FLOOR PLAN
SCALE : 1/16" = 1'-0"

**CORRIDOR FINISH SCHEDULE (RESIDENTIAL)**

| LEVEL | NAME | FLOOR FINISH | BASE FINISH | WALL FINISH | CEILING FINISH | COMMENTS |
|---|---|---|---|---|---|---|
| FLOOR 1 | CORRIDOR | CARPET | WOOD | PAINTED GWB* | PAINTED GWB | *WALL PAINT TO BE BENJAMIN MOORE ULTRA SPEC500, INTERIOR EGGSHELL FINISH, OR EQ. |
| FLOOR 2 | CORRIDOR | CARPET | WOOD | PAINTED GWB* | PAINTED GWB | |
| FLOOR 3 | CORRIDOR | CARPET | WOOD | PAINTED GWB* | PAINTED GWB | |
| FLOOR 4 | CORRIDOR | CARPET | WOOD | PAINTED GWB* | PAINTED GWB | |

ALL REPORTS, PLANS, SPECIFICATIONS AND COMPUTER FILES RELATING TO THIS PROJECT ARE THE PROPERTY OF THE MARTIN ARCHITECTURAL GROUP. THE MARTIN ARCHITECTURAL GROUP RETAINS ALL COMMON LAW, STATUTE AND OTHER RESERVED RIGHTS INCLUDING THE COPYRIGHT THERETO. REPRODUCTION OF THE MATERIAL HEREIN OR SUBSTANTIAL USE WITHOUT WRITTEN PERMISSION OF THE MARTIN ARCHITECTURAL GROUP VIOLATES THE COPYRIGHT LAWS OF THE UNITED STATES AND WILL BE SUBJECT TO LEGAL PROSECUTION.
©2022, The Martin Architectural Group, P.C.

NIC

COMMONWEALTH OF PENNSYLVANIA REGISTERED ARCHITECT DREW ROMANIC No. RA-020015

Professi
I hereby prepare this in laws of

Professi License Expirati

THE MARTIN ARCHITECTURAL GROUP, P.C.
ARCHITECTS AND LAND PLANNERS
A PROFESSIONAL CORPORATION
240 NORTH 22ND STREET, PHILADELPHIA, PA, 19103
P (215) 665-1680 F (215) 561-5664

| | |
|---|---|
| P.A.: | DREW ROMANIC |
| P.M.: | JASON DECAMPLI |
| DRAWN BY: | MAG |
| PROJECT NO: | 1362-12 |

| NO. | REVISION | DATE |
|---|---|---|
| 1 | PERMIT SET | 12/20/22. |

THIRD FLOOR PLAN

**Granite Run Apartment 02**

MIDDLETOWN TOWNSHIP, PA

| | |
|---|---|
| SCALE: | AS NOTED |
| DATE: | 12/31/2017 |

**A2.06**

©2022, The Martin Architectural Group, P.C.

Printed: 1/13/2023 4:26:23 PM




**BUILDING KEY PLAN**
SCALE : 1/64" = 1'-0"

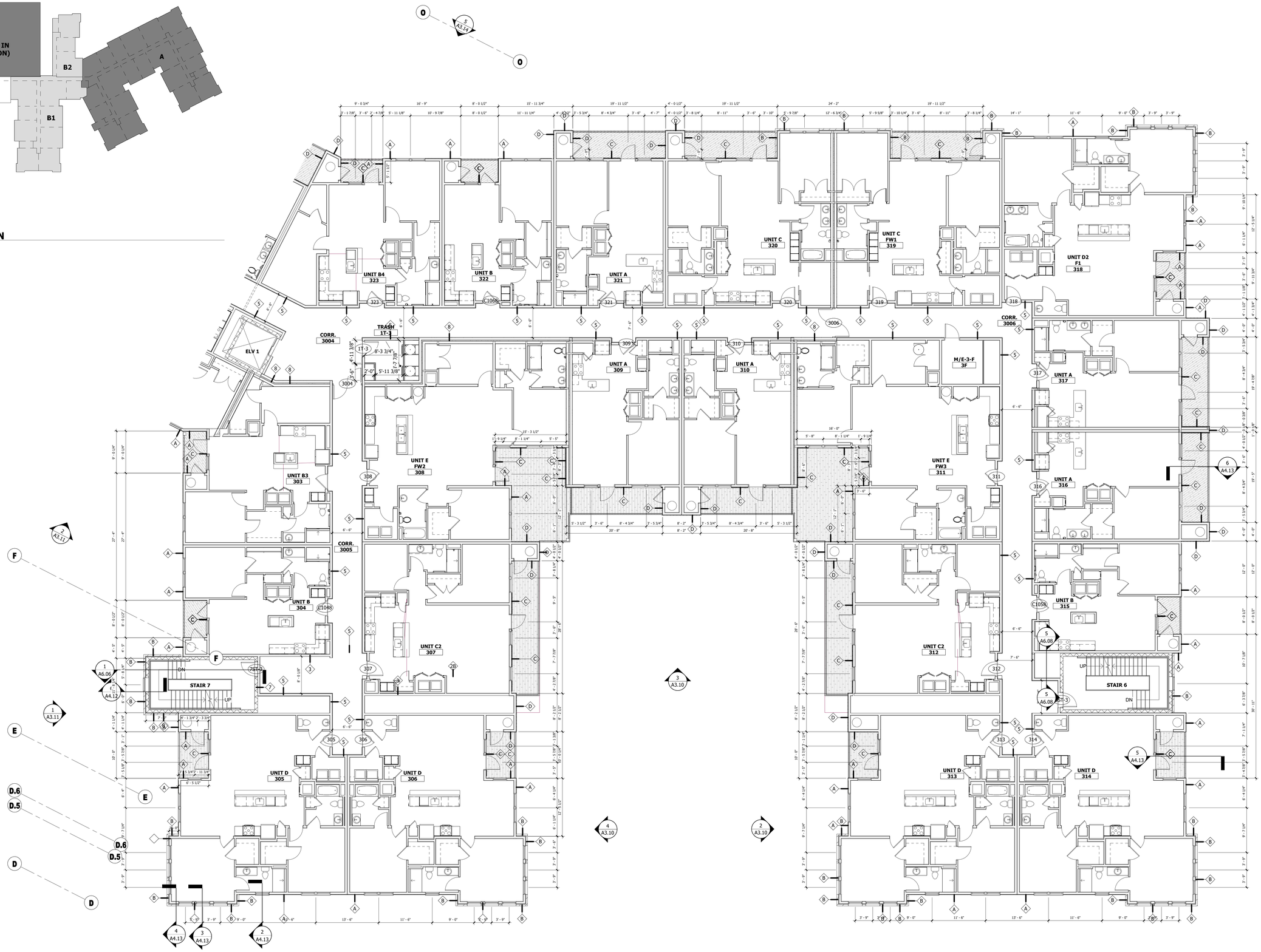


**1 ENLARGED PLAN - THIRD FLOOR A**
SCALE : 1/8" = 1'-0"

ALL REPORTS, PLANS, SPECIFICATIONS AND COMPUTER FILES RELATING TO THIS PROJECT ARE THE PROPERTY OF THE MARTIN ARCHITECTURAL GROUP. THE MARTIN ARCHITECTURAL GROUP RETAINS ALL COMMON LAW, STATUTE AND OTHER RESERVED RIGHTS INCLUDING THE COPYRIGHT THERETO. REPRODUCTION OF THE MATERIAL HEREIN OR SUBSTANTIAL USE WITHOUT WRITTEN PERMISSION OF THE MARTIN ARCHITECTURAL GROUP VIOLATES THE COPYRIGHT LAWS OF THE UNITED STATES AND WILL BE SUBJECT TO LEGAL PROSECUTION.
©2022, The Martin Architectural Group, P.C.




THE MARTIN ARCHITECTURAL GROUP, P.C.
ARCHITECTS AND LAND PLANNERS
A PROFESSIONAL CORPORATION
240 NORTH 22ND STREET, PHILADELPHIA, PA, 19103
P (215) 665-1080 F (215) 561-5064

| | |
|---|---|
| P.A.: | DREW ROMANIC |
| P.M.: | JASON DECAMPLI |
| DRAWN BY: | Author |
| PROJECT NO: | 1362-12 |

| NO. | REVISION | DATE |
|---|---|---|
| 1 | PERMIT SET | 12/20/22 |

# ENLARGED THIRD FLOOR PLAN A
## Granite Run Apartment 02

MIDDLETOWN TOWNSHIP, PA

SCALE:
DATE: 08/09/22

# A2.06A

©2022, The Martin Architectural Group, P.C.

Printed: 1/13/2023 4:26:36 PM




## BUILDING KEY PLAN
SCALE : 1/64" = 1'-0"

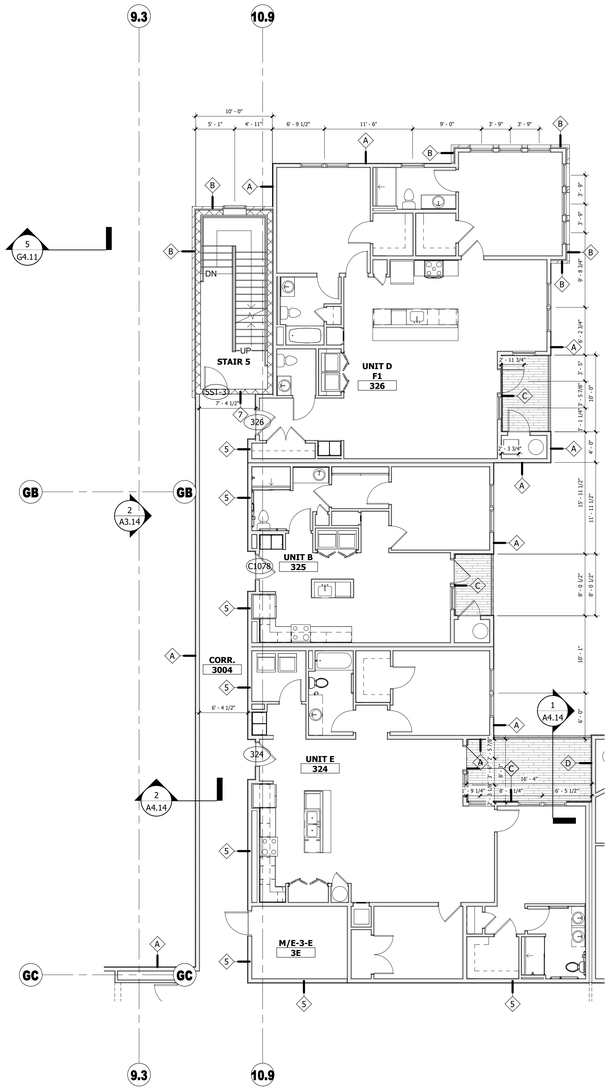


## 2 ENLARGED PLAN - THIRD FLOOR B2
SCALE : 1/8" = 1'-0"

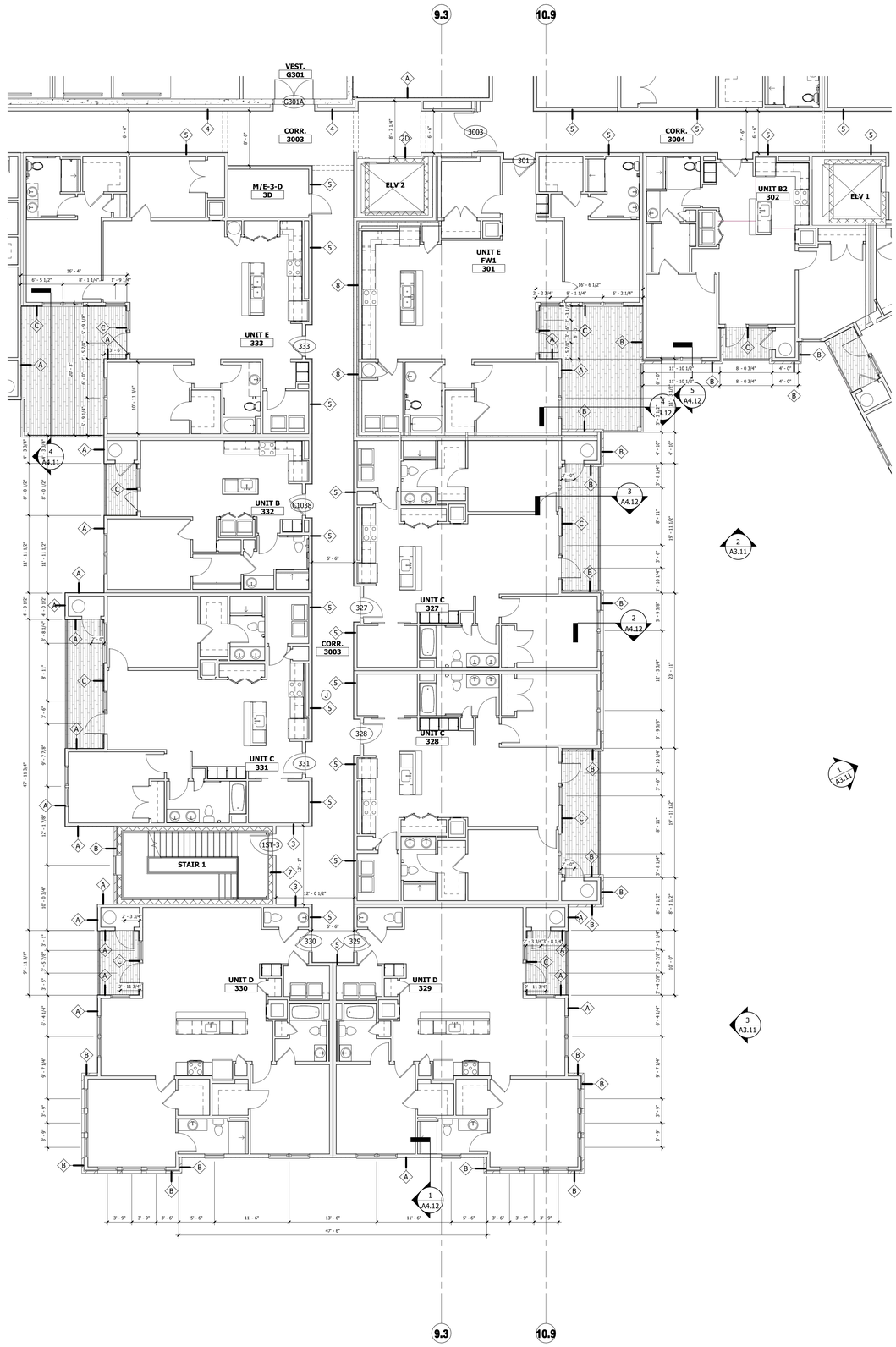


## 1 ENLARGED PLAN - THIRD FLOOR B1
SCALE : 1/8" = 1'-0"

ALL REPORTS, PLANS, SPECIFICATIONS AND COMPUTER FILES RELATING TO THIS PROJECT ARE THE PROPERTY OF THE MARTIN ARCHITECTURAL GROUP. THE MARTIN ARCHITECTURAL GROUP RETAINS ALL COMMON LAW, STATUTE AND OTHER RESERVED RIGHTS INCLUDING THE COPY-RIGHT THERETO. REPRODUCTION OF THE MATERIAL HEREIN OR SUBSTANTIAL USE WITHOUT WRITTEN PERMISSION OF THE MARTIN ARCHITECTURAL GROUP VIOLATES THE COPYRIGHT LAWS OF THE UNITED STATES AND WILL BE SUBJECT TO LEGAL PROSECUTION.
©2022, The Martin Architectural Group, P.C.

REGISTERED ARCHITECT COMMONWEALTH OF PENNSYLVANIA DREW ROMANIC No. RA-020978

THE MARTIN ARCHITECTURAL GROUP, P.C.
ARCHITECTS AND LAND PLANNERS
A PROFESSIONAL CORPORATION
240 NORTH 22ND STREET, PHILADELPHIA, PA, 19103
P (215) 665-1600 F (215) 561-5064

| | |
|---|---|
| P.A.: | DREW ROMANIC |
| P.M.: | JASON DECAMPLI |
| DRAWN BY: | Author |
| PROJECT NO: | 1362-12 |

| NO. | REVISION | DATE |
|---|---|---|
| 1 | PERMIT-SET | 12/20/22 |

# ENLARGED THIRD FLOOR PLAN B
## Granite Run Apartment 02
MIDDLETOWN TOWNSHIP, PA

SCALE:
DATE: 08/09/22

**A2.06B**

©2022, The Martin Architectural Group, P.C.

Printed: 1/13/2023 4:26:43 PM




**BUILDING KEY PLAN**
SCALE : 1/64" = 1'-0"

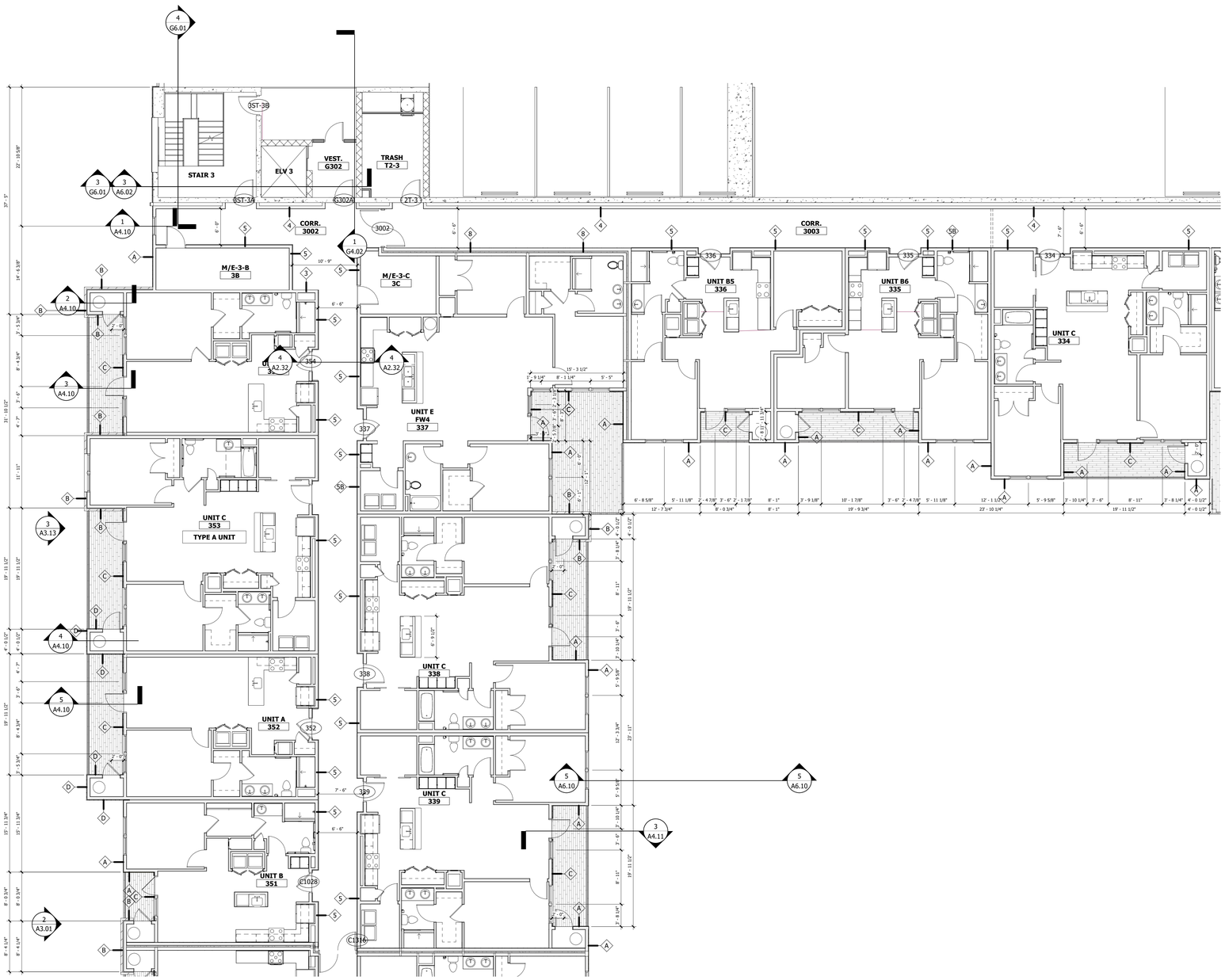


**1 ENLARGED PLAN - THIRD FLOOR C**
SCALE : 1/8" = 1'-0"

ALL REPORTS, PLANS, SPECIFICATIONS AND COMPUTER FILES RELATING TO THIS PROJECT ARE THE PROPERTY OF THE MARTIN ARCHITECTURAL GROUP. THE MARTIN ARCHITECTURAL GROUP RETAINS ALL COMMON LAW, STATUTE AND OTHER RESERVED RIGHTS INCLUDING THE COPYRIGHT THERETO. REPRODUCTION OF THE MATERIAL HEREIN OR SUBSTANTIAL USE WITHOUT WRITTEN PERMISSION OF THE MARTIN ARCHITECTURAL GROUP VIOLATES THE COPYRIGHT LAWS OF THE UNITED STATES AND WILL BE SUBJECT TO LEGAL PROSECUTION.
©2022, The Martin Architectural Group, P.C.




THE MARTIN ARCHITECTURAL GROUP, P.C.
ARCHITECTS AND LAND PLANNERS
A PROFESSIONAL CORPORATION
240 NORTH 22ND STREET, PHILADELPHIA, PA, 19103
P (215) 665-1080 F (215) 561-5064

| | |
|---|---|
| P.A.: | DREW ROMANIC |
| P.M.: | JASON DECAMPLI |
| DRAWN BY: | Author |
| PROJECT NO: | 1362-12 |

| NO. | REVISION | DATE |
|---|---|---|
| 1 | PERMIT SET | 12/20/22 |

# ENLARGED THIRD FLOOR PLAN C
## Granite Run Apartment 02

MIDDLETOWN TOWNSHIP, PA

SCALE:
DATE: 08/09/22

# A2.06C

©2022, The Martin Architectural Group, P.C.

Printed: 1/13/2023 4:26:49 PM




**BUILDING KEY PLAN**
SCALE : 1/64" = 1'-0"

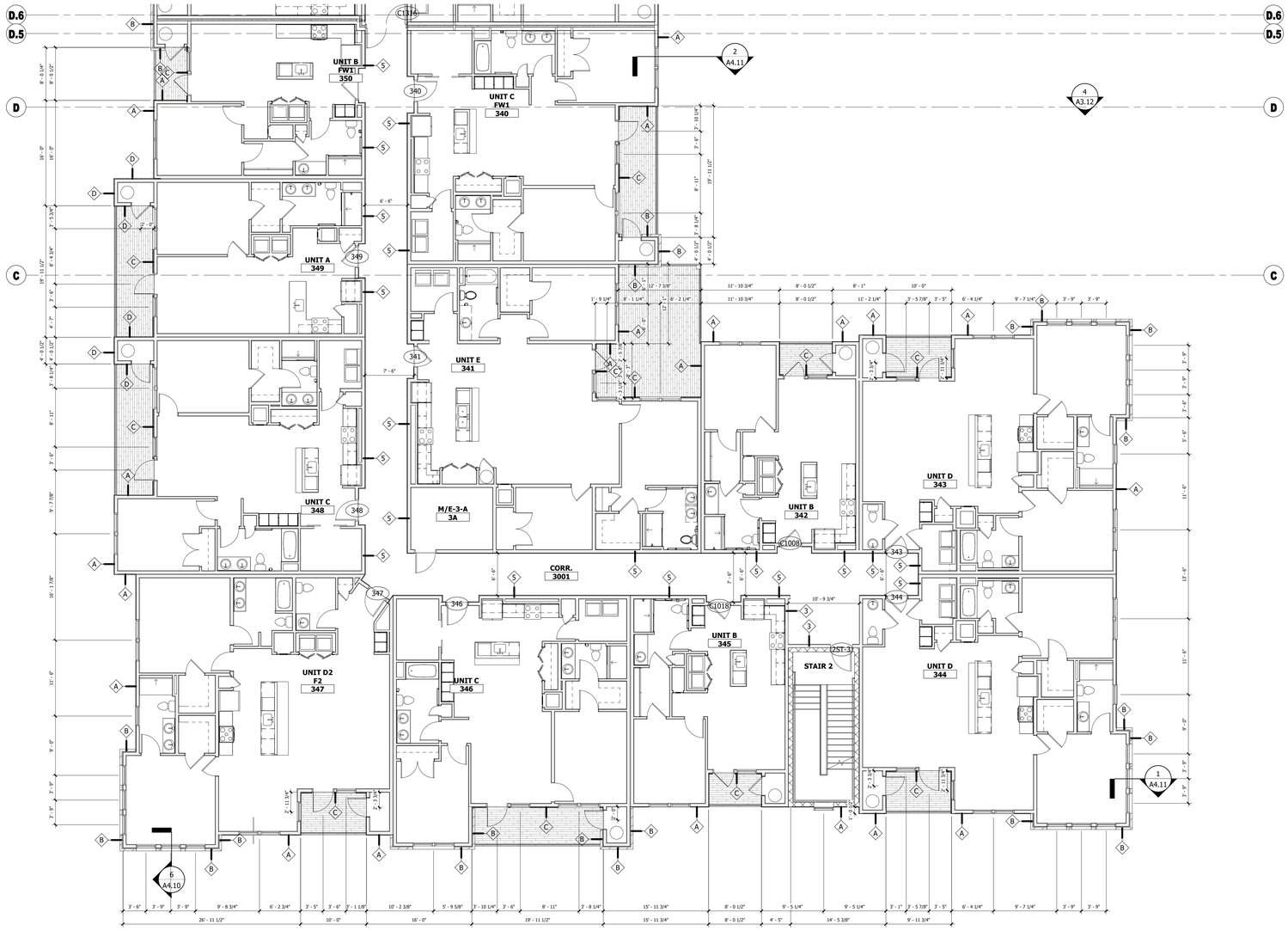


**1 ENLARGED PLAN - THIRD FLOOR D**
SCALE : 1/8" = 1'-0"

ALL REPORTS, PLANS, SPECIFICATIONS AND COMPUTER FILES RELATING TO THIS PROJECT ARE THE PROPERTY OF THE MARTIN ARCHITECTURAL GROUP. THE MARTIN ARCHITECTURAL GROUP RETAINS ALL COMMON LAW, STATUTE AND OTHER RESERVED RIGHTS INCLUDING THE COPY-RIGHT THERETO. REPRODUCTION OF THE MATERIAL HEREIN OR SUBSTANTIAL USE WITHOUT WRITTEN PERMISSION OF THE MARTIN ARCHITECTURAL GROUP VIOLATES THE COPYRIGHT LAWS OF THE UNITED STATES AND WILL BE SUBJECT TO LEGAL PROSECUTION.
©2022, The Martin Architectural Group, P.C.

THE MARTIN ARCHITECTURAL GROUP, P.C.
ARCHITECTS AND LAND PLANNERS
A PROFESSIONAL CORPORATION
240 NORTH 22ND STREET, PHILADELPHIA, PA, 19103
P (215) 665-1600 F (215) 561-5064

| | |
|---|---|
| P.A.: | DREW ROMANIC |
| P.M.: | JASON DECAMPLI |
| DRAWN BY: | Author |
| PROJECT NO: | 1362-12 |

| NO. | REVISION | DATE |
|---|---|---|
| 1 | PERMIT SET | 12/20/22 |

# ENLARGED THIRD FLOOR PLAN D

## Granite Run Apartment 02

MIDDLETOWN TOWNSHIP, PA

SCALE:
DATE: 08/09/22

**A2.06D**

©2022, The Martin Architectural Group, P.C.

Printed: 1/13/2023 4:26:54 PM

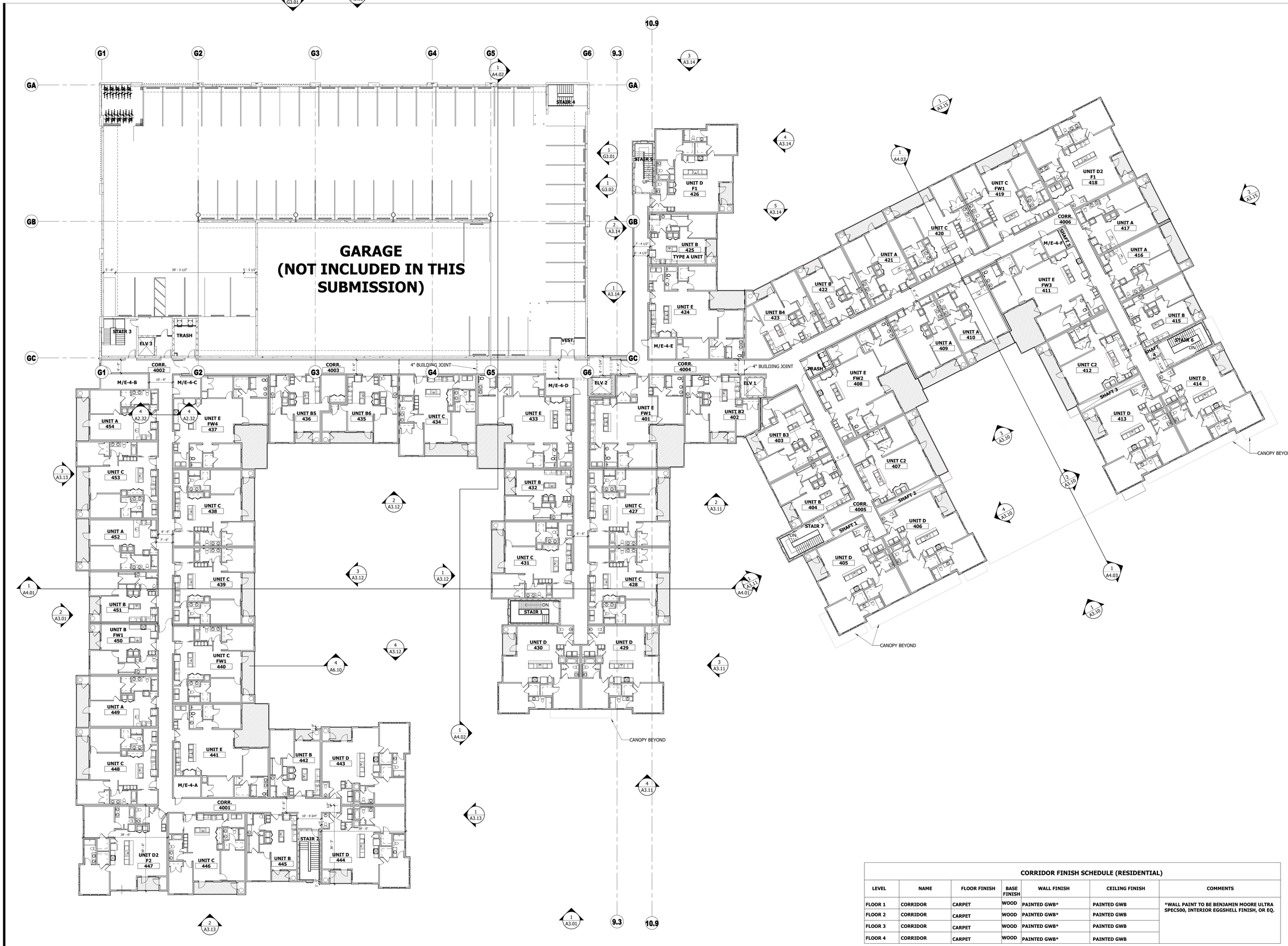


## 1 FOURTH FLOOR PLAN
SCALE : 1/16" = 1'-0"

**CORRIDOR FINISH SCHEDULE (RESIDENTIAL)**

| LEVEL | NAME | FLOOR FINISH | BASE FINISH | WALL FINISH | CEILING FINISH | COMMENTS |
|---|---|---|---|---|---|---|
| FLOOR 1 | CORRIDOR | CARPET | WOOD | PAINTED GWB* | PAINTED GWB | *WALL PAINT TO BE BENJAMIN MOORE ULTRA SPEC500, INTERIOR EGGSHELL FINISH, OR EQ. |
| FLOOR 2 | CORRIDOR | CARPET | WOOD | PAINTED GWB* | PAINTED GWB | |
| FLOOR 3 | CORRIDOR | CARPET | WOOD | PAINTED GWB* | PAINTED GWB | |
| FLOOR 4 | CORRIDOR | CARPET | WOOD | PAINTED GWB* | PAINTED GWB | |

ALL REPORTS, PLANS, SPECIFICATIONS AND COMPUTER FILES RELATING TO THIS PROJECT ARE THE PROPERTY OF THE MARTIN ARCHITECTURAL GROUP. THE MARTIN ARCHITECTURAL GROUP RETAINS ALL COMMON LAW, STATUTE AND OTHER RESERVED RIGHTS INCLUDING THE COPY-RIGHT THERETO. REPRODUCTION OF THE MATERIAL HEREIN OR SUBSTANTIAL USE WITHOUT WRITTEN PERMISSION OF THE MARTIN ARCHITECTURAL GROUP VIOLATES THE COPYRIGHT LAWS OF THE UNITED STATES AND WILL BE SUBJECT TO LEGAL PROSECUTION.
©2022, The Martin Architectural Group, P.C.

NIC

REGISTERED ARCHITECT COMMONWEALTH OF PENNSYLVANIA DREW ROMANIC No. RA-020076

Professi
I hereby prepare this/ac laws of
Professi License Expiratic

THE MARTIN ARCHITECTURAL GROUP, P.C.
ARCHITECTS AND LAND PLANNERS
A PROFESSIONAL CORPORATION
240 NORTH 22ND STREET, PHILADELPHIA, PA, 19103
P (215) 665-1080 F (215) 561-5064

| | |
|---|---|
| P.A.: | DREW ROMANIC |
| P.M.: | JASON DECAMPLI |
| DRAWN BY: | MAG |
| PROJECT NO: | 1362-12 |

| NO. | REVISION | DATE |
|---|---|---|
| 1 | PERMIT SET | 12/20/22 |

# FOURTH FLOOR PLAN
## Granite Run Apartment 02
MIDDLETOWN TOWNSHIP, PA

SCALE: AS NOTED
DATE: 12/31/2017

**A2.07**

©2022, The Martin Architectural Group, P.C.

Printed: 1/13/2023 4:27:09 PM

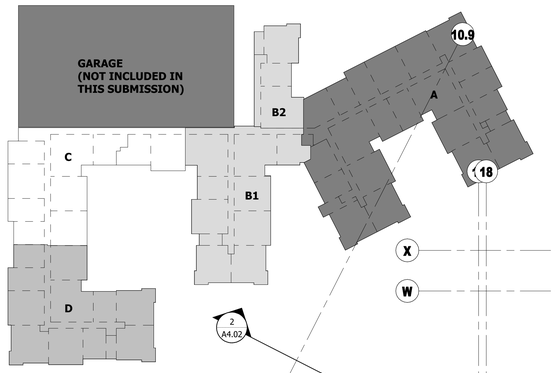


**BUILDING KEY PLAN**
SCALE : 1/64" = 1'-0"

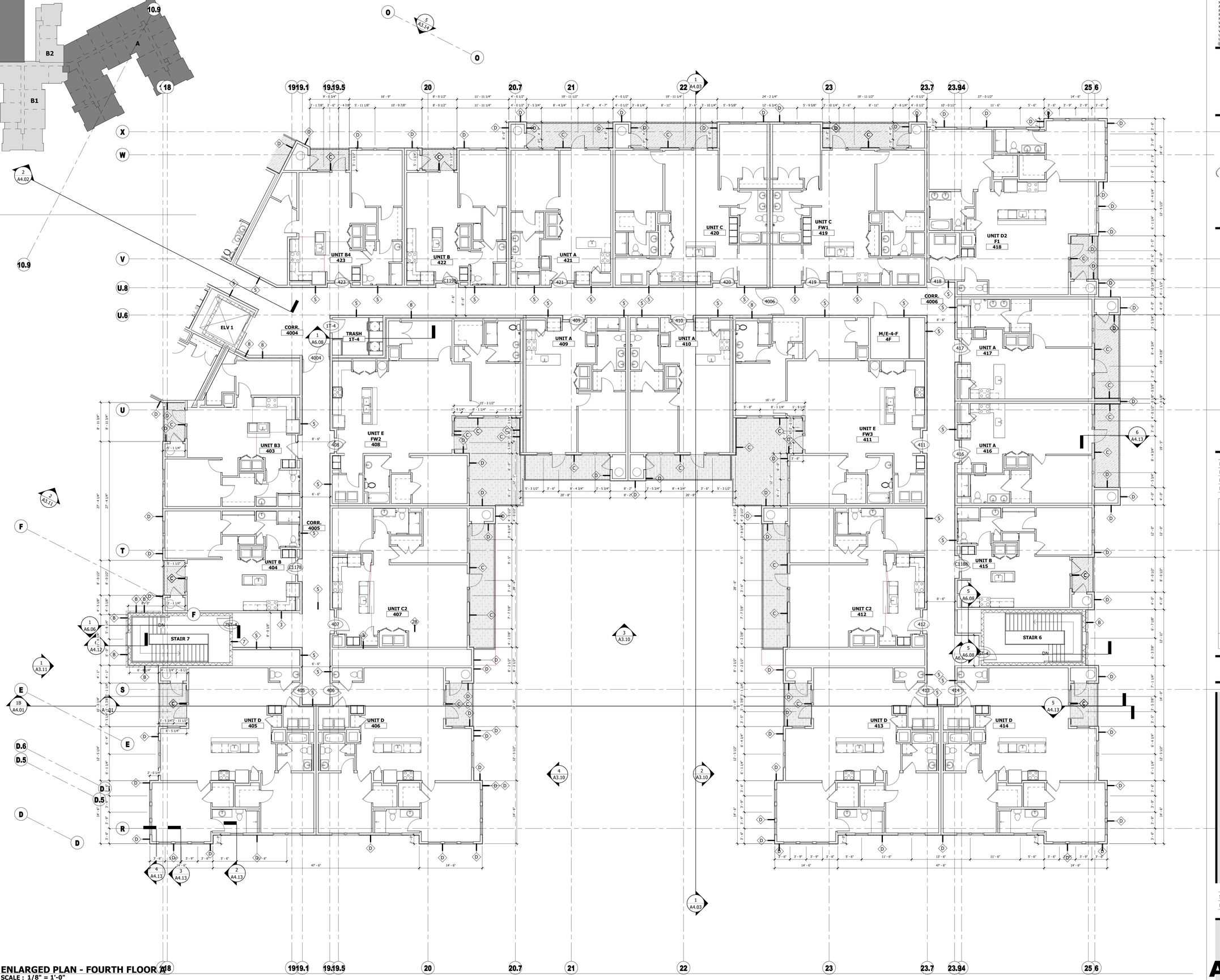


**1 ENLARGED PLAN - FOURTH FLOOR A**
SCALE : 1/8" = 1'-0"

ALL REPORTS, PLANS, SPECIFICATIONS AND COMPUTER FILES RELATING TO THIS PROJECT ARE THE PROPERTY OF THE MARTIN ARCHITECTURAL GROUP. THE MARTIN ARCHITECTURAL GROUP RETAINS ALL COMMON LAW, STATUTE AND OTHER RESERVED RIGHTS INCLUDING THE COPYRIGHT THERETO. REPRODUCTION OF THE MATERIAL HEREIN OR SUBSTANTIAL USE WITHOUT WRITTEN PERMISSION OF THE MARTIN ARCHITECTURAL GROUP VIOLATES THE COPYRIGHT LAWS OF THE UNITED STATES AND WILL BE SUBJECT TO LEGAL PROSECUTION.
©2022, The Martin Architectural Group, P.C.

THE MARTIN ARCHITECTURAL GROUP, P.C.
ARCHITECTS AND LAND PLANNERS
A PROFESSIONAL CORPORATION
240 NORTH 22ND STREET, PHILADELPHIA, PA, 19103
P (215) 665-1080 F (215) 561-5064

| | |
|---|---|
| P.A.: | DREW ROMANIC |
| P.M.: | JASON DECAMPLI |
| DRAWN BY: | Author |
| PROJECT NO: | 1362-12 |

| NO. | REVISION | DATE |
|---|---|---|
| 1 | PERMIT SET | 12/20/22 |

# ENLARGED FOURTH FLOOR PLAN A

## Granite Run Apartment 02

MIDDLETOWN TOWNSHIP, PA

SCALE:
DATE: 08/09/22

# A2.07A

©2022, The Martin Architectural Group, P.C.

Printed: 1/13/2023 4:27:21 PM




**BUILDING KEY PLAN**
SCALE : 1/64" = 1'-0"

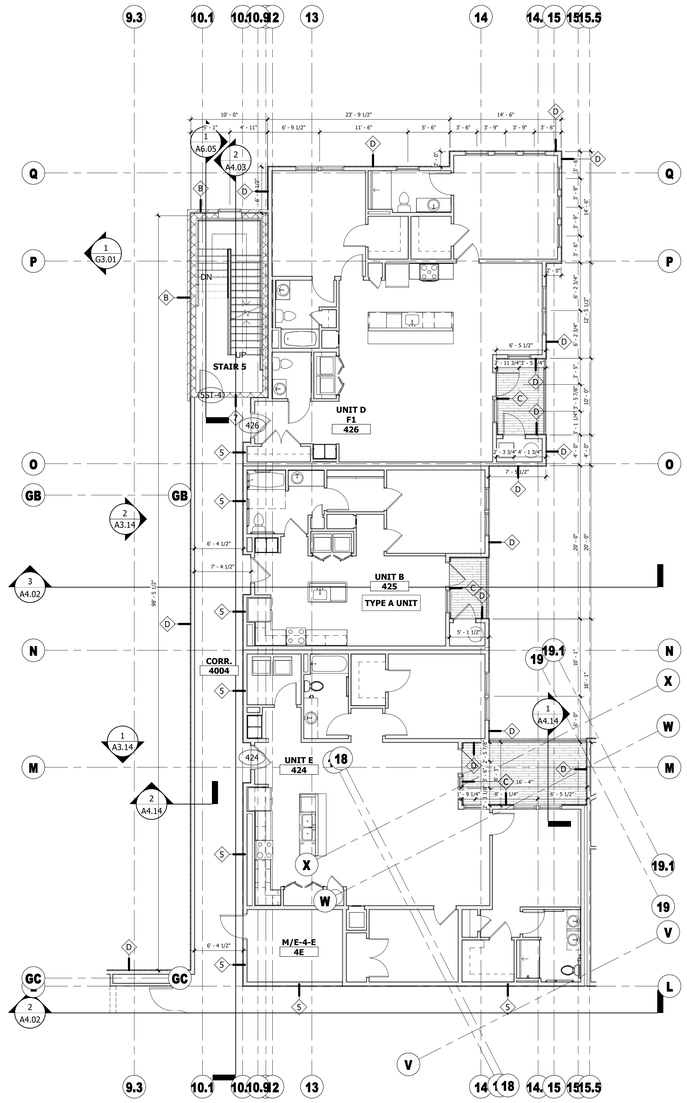


**2 ENLARGED PLAN - FOURTH FLOOR B2**
SCALE : 1/8" = 1'-0"

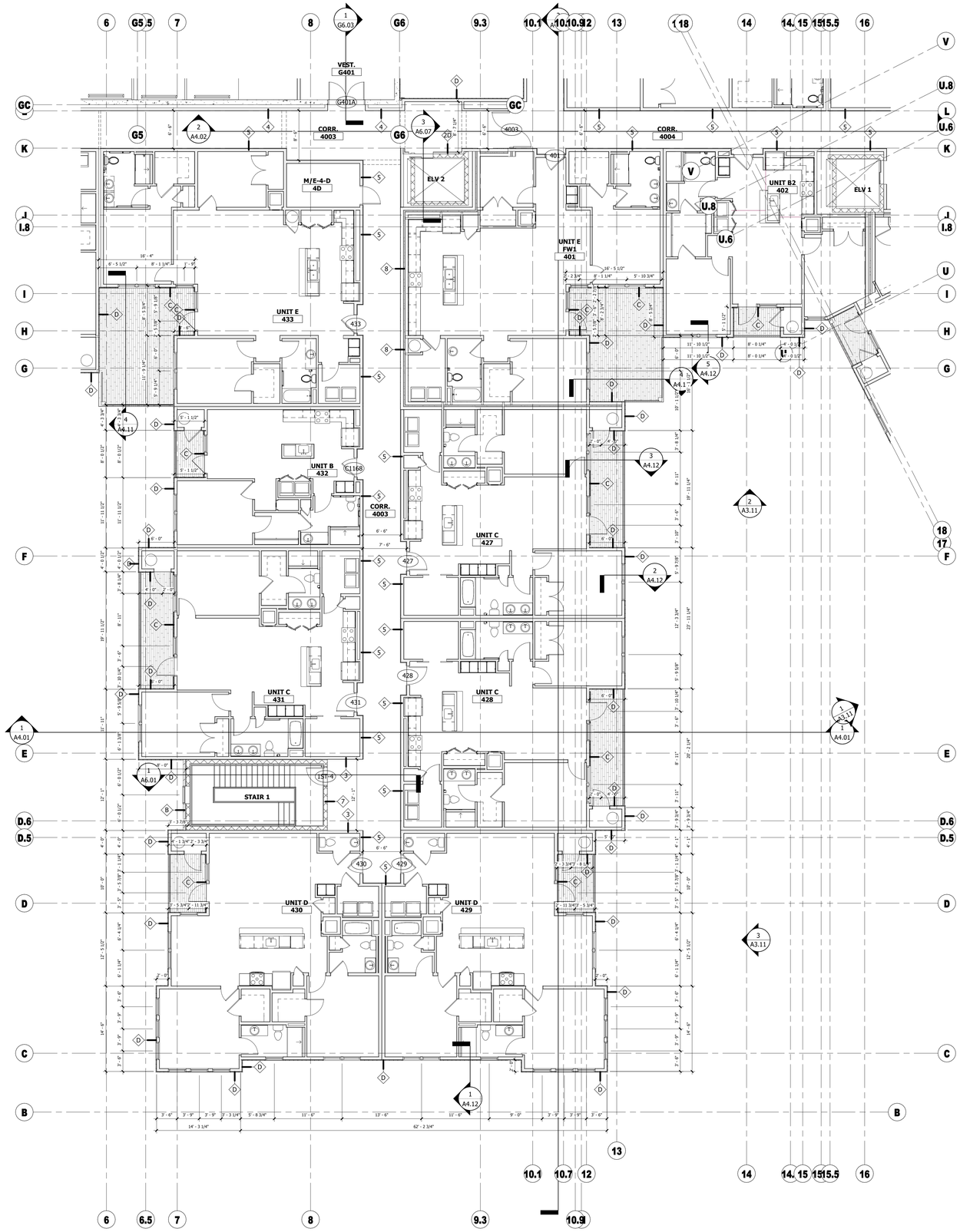


**1 ENLARGED PLAN - FOURTH FLOOR B1**
SCALE : 1/8" = 1'-0"

ALL REPORTS, PLANS, SPECIFICATIONS AND COMPUTER FILES RELATING TO THIS PROJECT ARE THE PROPERTY OF THE MARTIN ARCHITECTURAL GROUP. THE MARTIN ARCHITECTURAL GROUP RETAINS ALL COMMON LAW, STATUTE AND OTHER RESERVED RIGHTS INCLUDING THE COPYRIGHT THERETO. REPRODUCTION OF THE MATERIAL HEREIN OR SUBSTANTIAL USE WITHOUT WRITTEN PERMISSION OF THE MARTIN ARCHITECTURAL GROUP VIOLATES THE COPYRIGHT LAWS OF THE UNITED STATES AND WILL BE SUBJECT TO LEGAL PROSECUTION.
©2022, The Martin Architectural Group, P.C.




THE MARTIN ARCHITECTURAL GROUP, P.C.
ARCHITECTS AND LAND PLANNERS
A PROFESSIONAL CORPORATION
240 NORTH 22ND STREET, PHILADELPHIA, PA, 19103
P (215) 665-1080 F (215) 561-5064

| | |
|---|---|
| P.A.: | DREW ROMANIC |
| P.M.: | JASON DECAMPLI |
| DRAWN BY: | Author |
| PROJECT NO: | 1362-12 |

| NO. | REVISION | DATE |
|---|---|---|
| 1 | PERMIT SET | 12/20/22 |

# ENLARGED FOURTH FLOOR PLAN B
## Granite Run Apartment 02

MIDDLETOWN TOWNSHIP, PA

SCALE:
DATE: 08/09/22

# A2.07B

©2022, The Martin Architectural Group, P.C.

Printed: 1/13/2023 4:27:30 PM




**BUILDING KEY PLAN**
SCALE : 1/64" = 1'-0"

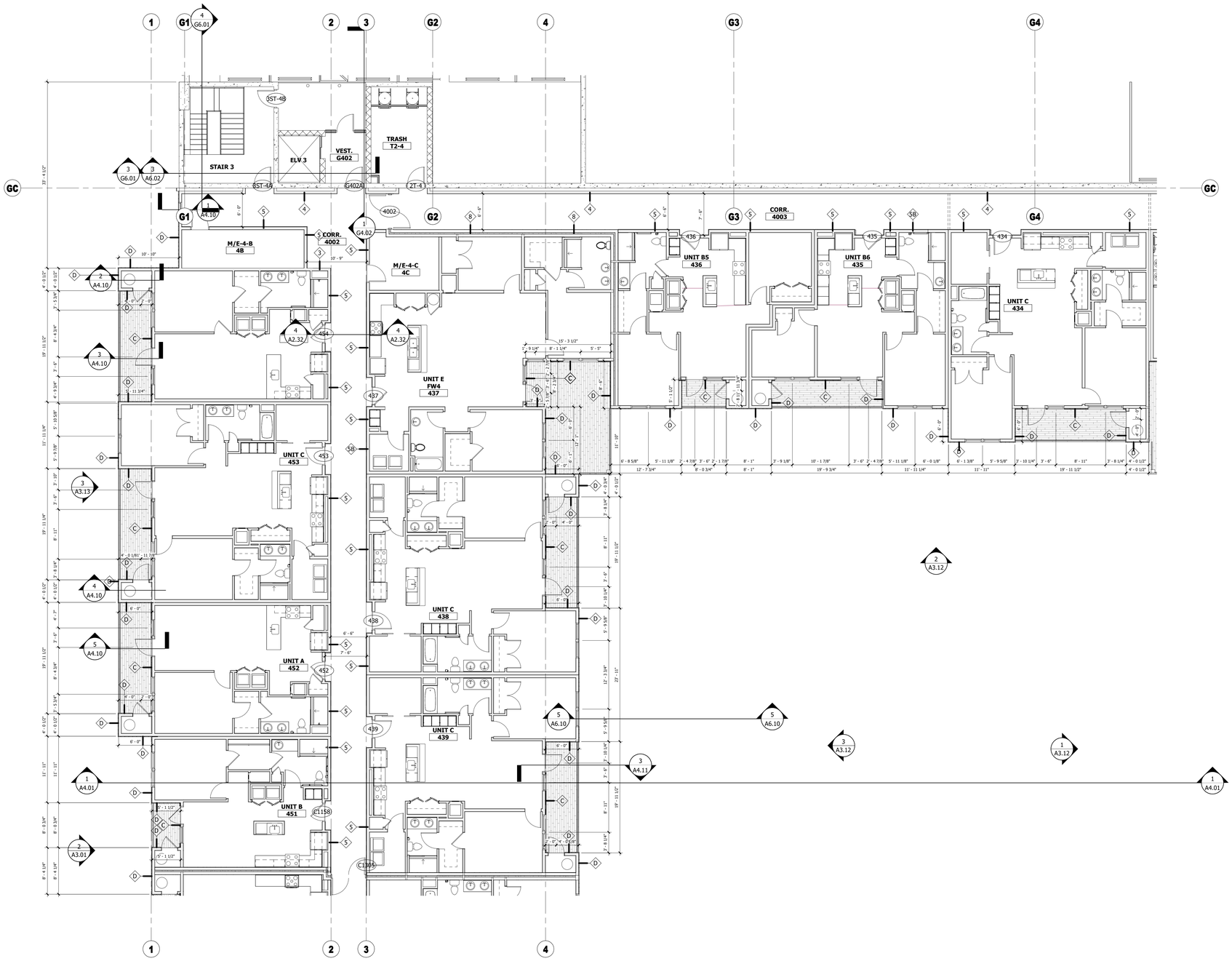


**1 ENLARGED PLAN - FOURTH FLOOR C**
SCALE : 1/8" = 1'-0"

ALL REPORTS, PLANS, SPECIFICATIONS AND COMPUTER FILES RELATING TO THIS PROJECT ARE THE PROPERTY OF THE MARTIN ARCHITECTURAL GROUP. THE MARTIN ARCHITECTURAL GROUP RETAINS ALL COMMON LAW, STATUTE AND OTHER RESERVED RIGHTS INCLUDING THE COPYRIGHT THERETO. REPRODUCTION OF THE MATERIAL HEREIN OR SUBSTANTIAL USE WITHOUT WRITTEN PERMISSION OF THE MARTIN ARCHITECTURAL GROUP VIOLATES THE COPYRIGHT LAWS OF THE UNITED STATES AND WILL BE SUBJECT TO LEGAL PROSECUTION.
©2022, The Martin Architectural Group, P.C.




THE MARTIN ARCHITECTURAL GROUP, P.C.
ARCHITECTS AND LAND PLANNERS
A PROFESSIONAL CORPORATION
240 NORTH 22ND STREET, PHILADELPHIA, PA, 19103
P (215) 665-1080 F (215) 561-5064

| | |
|---|---|
| P.A.: | DREW ROMANIC |
| P.M.: | JASON DECAMPLI |
| DRAWN BY: | Author |
| PROJECT NO: | 1362-12 |

| NO. | REVISION | DATE |
|---|---|---|
| 1 | PERMIT SET | 12/20/22 |

# ENLARGED FOURTH FLOOR PLAN C
## Granite Run Apartment 02

MIDDLETOWN TOWNSHIP, PA

SCALE:
DATE: 08/09/22

# A2.07C

©2022, The Martin Architectural Group, P.C.

Printed: 1/13/2023 4:27:38 PM




**BUILDING KEY PLAN**
SCALE : 1/64" = 1'-0"

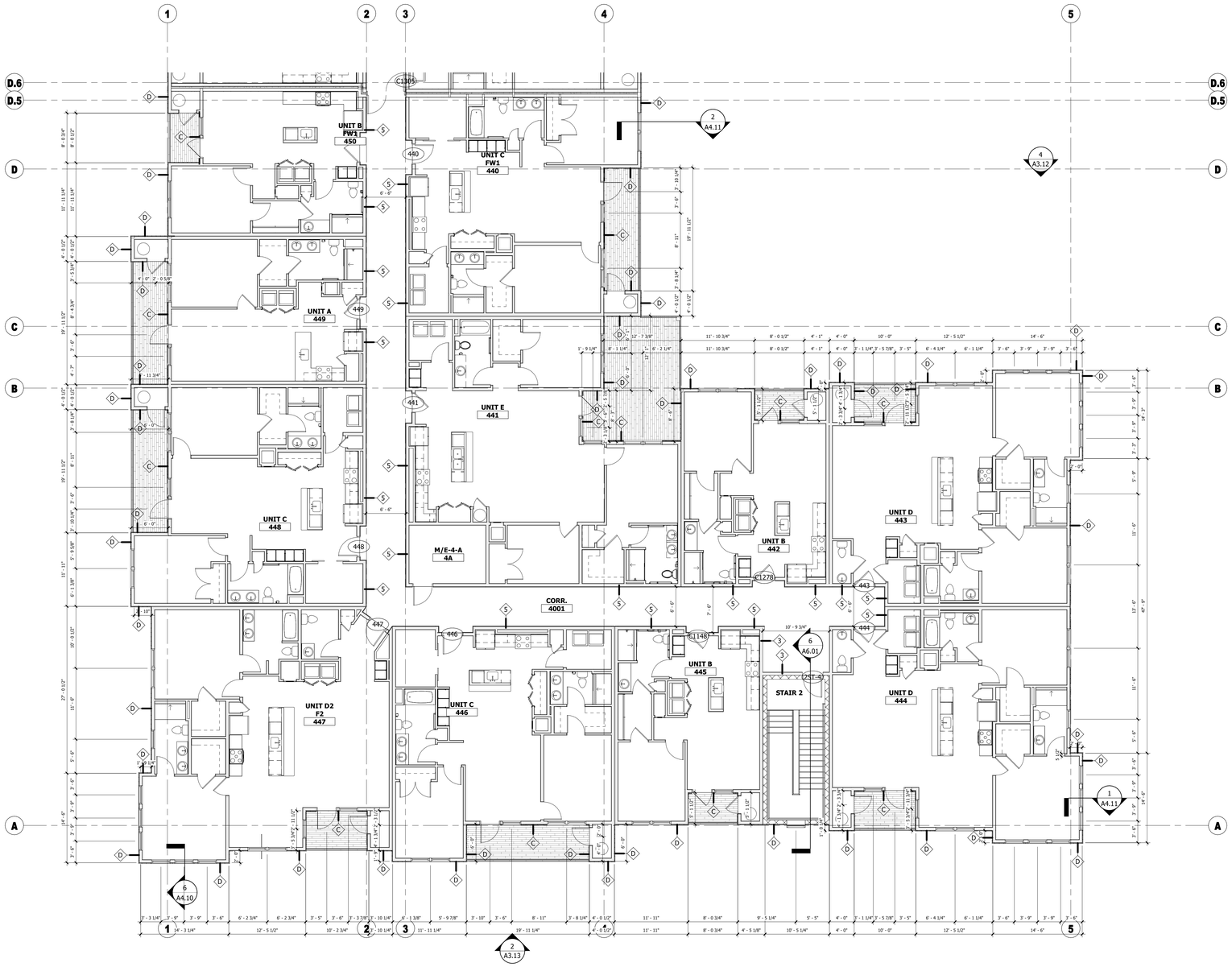


**1 ENLARGED PLAN - FOURTH FLOOR D**
SCALE : 1/8" = 1'-0"

ALL REPORTS, PLANS, SPECIFICATIONS AND COMPUTER FILES RELATING TO THIS PROJECT ARE THE PROPERTY OF THE MARTIN ARCHITECTURAL GROUP. THE MARTIN ARCHITECTURAL GROUP RETAINS ALL COMMON LAW, STATUTE AND OTHER RESERVED RIGHTS INCLUDING THE COPYRIGHT THERETO. REPRODUCTION OF THE MATERIAL HEREIN OR SUBSTANTIAL USE WITHOUT WRITTEN PERMISSION OF THE MARTIN ARCHITECTURAL GROUP VIOLATES THE COPYRIGHT LAWS OF THE UNITED STATES AND WILL BE SUBJECT TO LEGAL PROSECUTION.
©2022, The Martin Architectural Group, P.C.




THE MARTIN ARCHITECTURAL GROUP, P.C.
ARCHITECTS AND LAND PLANNERS
A PROFESSIONAL CORPORATION
240 NORTH 22ND STREET, PHILADELPHIA, PA, 19103
P (215) 665-1080 F (215) 561-5064

| | |
|---|---|
| P.A.: | DREW ROMANIC |
| P.M.: | JASON DECAMPLI |
| DRAWN BY: | Author |
| PROJECT NO: | 1362-12 |

| NO. | REVISION | DATE |
|---|---|---|
| 1 | PERMIT SET | 12/20/22 |

# ENLARGED FOURTH FLOOR PLAN D
## Granite Run Apartment 02

MIDDLETOWN TOWNSHIP, PA

SCALE:
DATE: 08/09/22

# A2.07D

©2022, The Martin Architectural Group, P.C.

Printed: 1/13/2023 4:27:45 PM

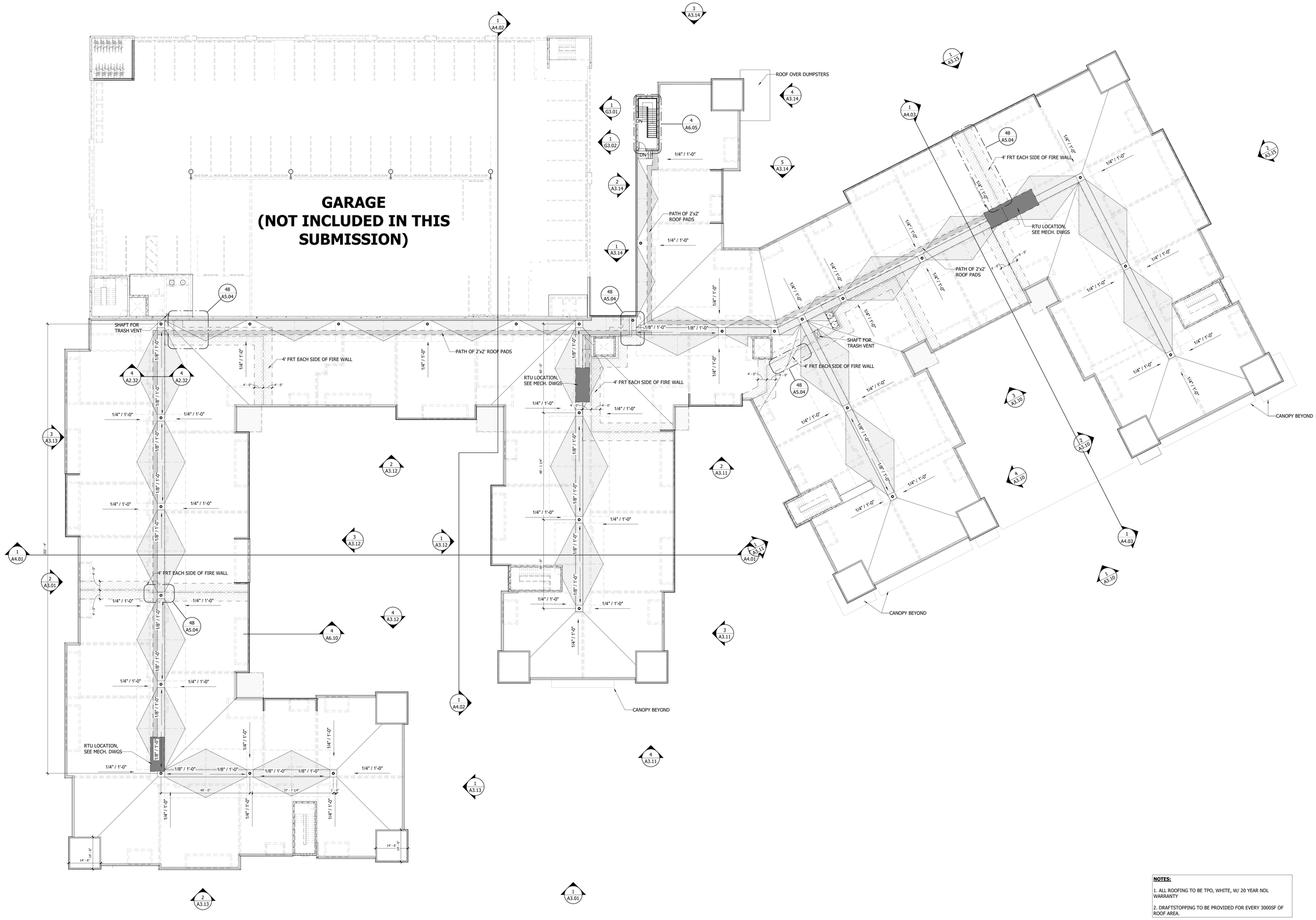


**1 ROOF LEVEL**
SCALE : 1/16" = 1'-0"

**NOTES:**

1. ALL ROOFING TO BE TPO, WHITE, W/ 20 YEAR NDL WARRANTY

2. DRAFTSTOPPING TO BE PROVIDED FOR EVERY 3000SF OF ROOF AREA.

ALL REPORTS, PLANS, SPECIFICATIONS AND COMPUTER FILES RELATING TO THIS PROJECT ARE THE PROPERTY OF THE MARTIN ARCHITECTURAL GROUP. THE MARTIN ARCHITECTURAL GROUP RETAINS ALL COMMON LAW, STATUTE AND OTHER RESERVED RIGHTS INCLUDING THE COPYRIGHT THERETO. REPRODUCTION OF THE MATERIAL HEREIN OR SUBSTANTIAL USE WITHOUT WRITTEN PERMISSION OF THE MARTIN ARCHITECTURAL GROUP VIOLATES THE COPYRIGHT LAWS OF THE UNITED STATES AND WILL BE SUBJECT TO LEGAL PROSECUTION.
©2022, The Martin Architectural Group, P.C.

THE MARTIN ARCHITECTURAL GROUP, P.C.
ARCHITECTS AND LAND PLANNERS
A PROFESSIONAL CORPORATION
240 NORTH 22ND STREET, PHILADELPHIA, PA, 19103
P (215) 665-1080 F (215) 561-5064

| | |
|---|---|
| P.A.: | DREW ROMANIC |
| P.M.: | JASON DECAMPLI |
| DRAWN BY: | Author |
| PROJECT NO: | 1362-12 |

| NO. | REVISION | DATE |
|---|---|---|
| 1 | PERMIT SET | 12/20/22 |

# ROOF PLAN
## Granite Run Apartment 02
MIDDLETOWN TOWNSHIP, PA

SCALE:
DATE: 06/16/22

# A2.08

©2022, The Martin Architectural Group, P.C.

Printed: 1/13/2023 4:28:01 PM




1 **ROOF DRAIN AREAS**
SCALE : 1/16" = 1'-0"

ALL REPORTS, PLANS, SPECIFICATIONS AND COMPUTER FILES RELATING TO THIS PROJECT ARE THE PROPERTY OF THE MARTIN ARCHITECTURAL GROUP. THE MARTIN ARCHITECTURAL GROUP RETAINS ALL COMMON LAW, STATUTE AND OTHER RESERVED RIGHTS INCLUDING THE COPYRIGHT THERETO. REPRODUCTION OF THE MATERIAL HEREIN OR SUBSTANTIAL USE WITHOUT WRITTEN PERMISSION OF THE MARTIN ARCHITECTURAL GROUP VIOLATES THE COPYRIGHT LAWS OF THE UNITED STATES AND WILL BE SUBJECT TO LEGAL PROSECUTION.
©2022, The Martin Architectural Group, P.C.

THE MARTIN ARCHITECTURAL GROUP, P.C.
ARCHITECTS AND LAND PLANNERS
A PROFESSIONAL CORPORATION
240 NORTH 22ND STREET, PHILADELPHIA, PA, 19103
P (215) 665-1080 F (215) 561-5064

| | |
|---|---|
| P.A.: | DREW ROMANIC |
| P.M.: | JASON DECAMPLI |
| DRAWN BY: | Author |
| PROJECT NO: | 1362-12 |

| NO. | REVISION | DATE |
|---|---|---|
| 1 | PERMIT SET | 12/20/22 |

ROOF DRAIN AREAS
**Granite Run Apartment 02**
MIDDLETOWN TOWNSHIP, PA

SCALE:
DATE: 10/20/22

**A2.08A**

©2022, The Martin Architectural Group, P.C.

Printed: 1/13/2023 4:28:17 PM

## DOOR SCHEDULE - DWELLING UNIT

| MARK | DOOR TYPE | WIDTH | HEIGHT | DOOR MATERIAL | FRAME TYPE | FRAME MATERIAL | FIRE RATING | REMARKS |
|---|---|---|---|---|---|---|---|---|
| 01 | UA | 3'-0" | 7'-0" | MTL | F1 | MTL | 20 min. | UNIT ENTRY - SPRING HINGES |
| 02 | UE | 3'-0" | 7'-0" | VY | F1 | VY | | BALCONY DOOR |
| 03 | UB | 3'-0" | 6'-8" | MTE | F1 | WD | | |
| 04 | UB | 2'-10" | 6'-8" | MTE | F1 | WD | | |
| 05 | UA | 2'-10" | 6'-8" | EM | F1 | MTL | | UNIT EXT. MECH DOOR |
| 06 | UB | 2'-6" | 6'-8" | MTE | F1 | WD | | |
| 07 | UB | 2'-0" | 6'-8" | MTE | F1 | WD | | |
| 08 | UC | 2'-0" | 6'-8" | MTE | F1 | WD | | LOUVERED AIR HANDLER |
| 09 | UC | 1'-6" | 6'-8" | MTE | F1 | WD | | LOUVERED AIR HANDLER |
| 10 | UB | 1'-6" | 6'-8" | MTE | F1 | WD | | |
| 11 | UB | 1'-4" | 6'-8" | MTE | F1 | WD | | |
| 12 | UDD | 4'-0" | 6'-8" | MTE | | WD | | SLIDING BARN DOOR |
| 13 | UBB | 5'-0" | 6'-8" | MTE | F2 | WD | | DOUBLE SWING DOOR |
| 14 | UCC | 5'-0" | 6'-8" | MTE | F2 | WD | | LOUVERED BI-FOLD |
| 15 | UCC | 6'-0" | 6'-8" | MTE | F2 | WD | | LOUVERED BI-FOLD |
| 19 | UB | 1'-9" | 6'-8" | MTE | F1 | WD | | |
| E | | 3'-0" | 7'-0" | | | | | |
| EE | | 6'-0" | 7'-0" | | | | | |
| F | | 6'-0" | 7'-0" | | | | | *RATED GLASS |

## ROOM FINISH SCHEDULE

| SPACE | FLOOR | WALL | CEILING | HEIGHT | REMARKS |
|---|---|---|---|---|---|
| KITCHEN | 3 | A | 1 | 9'-0" | |
| LIVING RM. | 3 | A | 1 | 9'-0" | |
| BEDROOMS | 1 | A | 1 | 9'-0" | |
| DEN | 3 | A | 1 | 9'-0" | |
| BATHS | 4 | B/C | 2 | 9'-0" | |
| CLOSETS | | A | 1 | 9'-0" | FLOORING: MATCH ADJ. |
| LAUNDRY | 3 | A | 2 | 9'-0" | FLOORING: MATCH ADJ. |
| UNIT-HVAC | | A | 1 | 9'-0" | FL.: GYPCRETE PAINT-LIGHT GRAY |

## MATERIAL CODE

| FLR. / BASE | | WALL | | CEILING | |
|---|---|---|---|---|---|
| 1 | CPT / WD | A | G.W.B. | 1 | G.W.B. |
| 2 | | B | MR.G.W.B. | 2 | MR.G.W.B. |
| 3 | LVT / WD | C | CT-2 | 3 | |
| 4 | CT / CT | D | | 4 | |
| 5 | | E | | 5 | |
| 6 | | F | | 6 | |
| 7 | | G | | 7 | |
| 8 | | H | | 8 | |

MATERIAL GLOSSARY

| | |
|---|---|
| CPT | CARPET - SHAW GULF WINDS - COLOR: 532 MINERAL |
| CT-1 | CERAMIC TILE - 12X24 FLORIM MATERIA - COLOR: HONED 02 |
| CT-2 | CERAMIC TILE - 12X24 FLORIM MATERIA - COLOR: STONE CALACATTA |
| G.W.B. | GYPSUM WALL BOARD |
| MR.G.W.B. | MOISTURE RESISTANT G.W.B. |
| LVT | VINYL WOOD PLANK - SHAW TERRAIN 12 MIL - COLOR: 766 ECHO |
| WD. | WOOD |

## UNIT DOOR TYPES

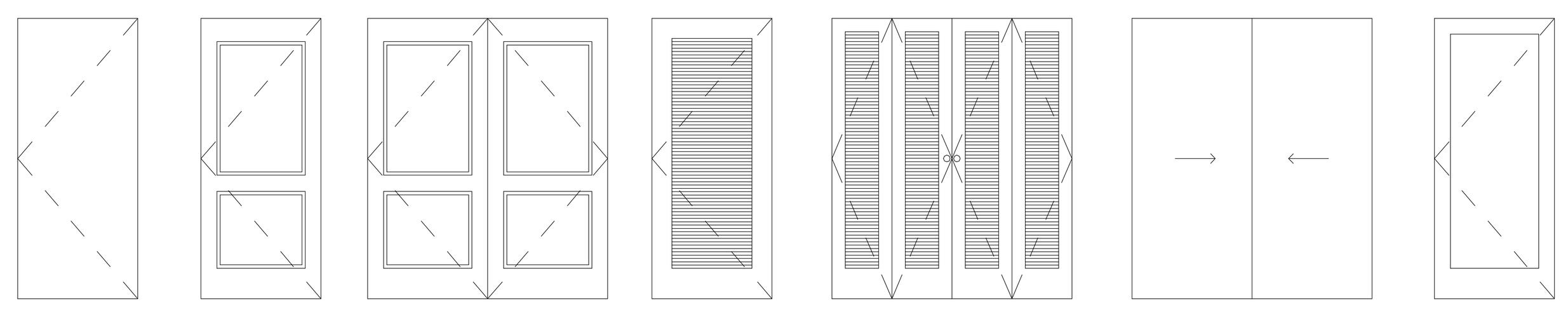


## FRAME TYPES

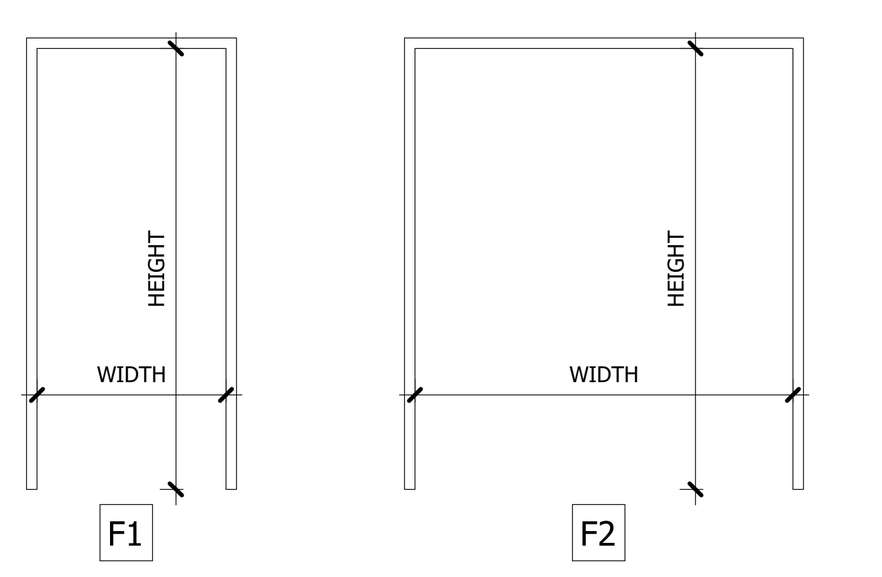


**DOOR/FRAME MATERIAL KEY:**

| | |
|---|---|
| AL | ALUMINUM |
| EM | EXTERIOR METAL |
| GL | GLASS |
| HC | HOLLOW CORE |
| HM | HOLLOW METAL |
| MTL | METAL |
| SC | SOLID CORE |
| SR | STILE & RAIL |
| VY | VINYL |
| WD | WOOD |
| MTE | MASONITE |

## WINDOW SCHEDULE

| MARK | WIDTH | HEIGHT | WINDOW TYPE | CONSTRUCTION TYPE | COMMENTS |
|---|---|---|---|---|---|
| A | 3'-0" | 6'-0" | SINGLE HUNG | VINYL | All windows to be provided with opening limiters. See specifications. |
| B | 6'-3 1/2" | 6'-0" | SINGLE HUNG | VINYL | All windows to be provided with opening limiters. See specifications. |

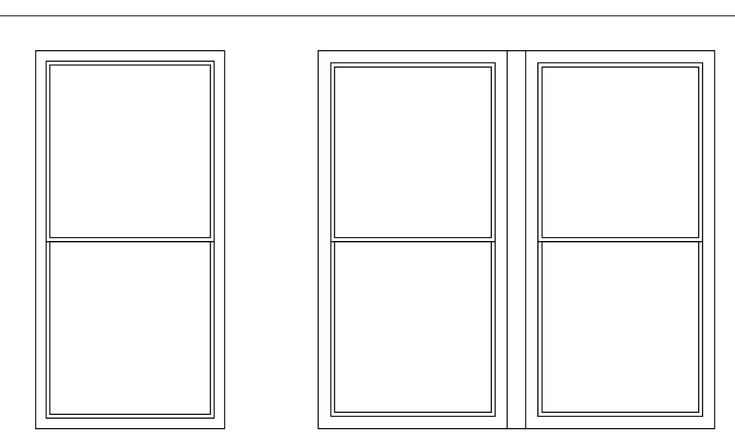


NOTE: (2) 2X6 FRT STUDS PROVIDED BETWEEN GROUP WINDOWS. (TYPICAL) PROVIDE 4" LIMITATION FOR WINDOW LIMITERS ON ALL WINDOWS

## LIGHT FIXTURE LEGEND

| | |
|---|---|
| U1 | LITHONIA FMSATL-16-20840-BN; SEMI FLUSH MOUNT |
| U2 | LITHONIA FMFL-30840-SATL-BN; LINEAR FLUSH MOUNT |
| U3 | LITHONIA DFMADRL-14-F01; FMPANL-14-20840M6; LED SURFACE MOUNT DRUM |
| U4 | SATCO COVER PLATE |
| U5 | PROGRESS P300187-009-30; LED BATH VANITY |
| U6 | LITHONIA FMMUSL-9-14840-WH; LED CLOSET MUSHROOM |
| U7 | LITHONIA MDPC-BNP-M6; DGDT 1003 M6 |
| U8 | COOPER SMD6R-12-930-WH; 1200 LUMEN SLIM SURFACE (120 VOLT ONLY) |
| U9 | NUVO 62-1161; 7" LED FLUSH MOUNT DISCK |
| U10 | LITHONIA OLWPLED-P1-40K-120-PE-BZ; LED MINI WALL PACK |

## UNIT PLAN AND INTERIOR ELEVATION KEYNOTES

| Number | Description |
|---|---|
| 1 | WASHER |
| 2 | DRYER |
| 3 | RANGE / OVEN |
| 4 | REFRIGERATOR |
| 5 | DISHWASHER |
| 6 | KITCHEN SINK / FAUCET |
| 7 | TOILET |
| 8 | VANITY - SEE ELEVATION FOR SIZE |
| 9 | 30"X60" TUB |
| 10 | 36"X60" SHOWER BASE |
| 11 | 32"X60" SHOWER BASE |
| 12 | ACCESSIBLE THRESHOLD - MARBLE |
| 13 | ACCESSIBLE THRESHOLD - ALUMINIUM |
| 14 | SOFFIT OVER REFRIGERATOR AND BEHIND CABINET |
| 15 | LINEN SHELVES (5) PER SPECIFICATION |
| 16 | WIRE SHEVLING |
| 17 | KNEE WALL BELOW COUNTERTOP |
| 18 | BALCONY RAILING @ 42" HIGH |
| 19 | WALL MOUNTED HOT WATER HEATER |
| 20 | HVAC UNIT MOUNTED ON WALL |
| 21 | PRE ROCK BEHIND BATHING FIXTURES |
| 22 | CUBBIE CABINETS |
| 23 | MICROWAVE WITH RECIRCULATION HOOD |
| 24 | WALL TILE BETWEEN CONTERTOP AND WALL CABINET. SEE 1D DRAWING |
| 25 | BLOCKING FOR GRAB BAR. SEE FIG. 4-SHEET A0.06 |
| 26 | 24" HORIZONTAL GRAB BAR @ TUB BACK WALL. SEE FIG. 4 - SHEET A0.06 |
| 27 | SHOWER ROD |
| 28 | NOT USED |
| 29 | PAINTED FRAME MIRROR |
| 30 | TOILET TISSUE HOLDER @ 26" A.F.F. |
| 31 | 30" TOWEL BAR |
| 32 | ROBE HOOK |
| 33 | SHOWER HEAD |
| 34 | VANITY SINK BOWL |

**NOTES:**

1. SEE SPECIFICATIONS FOR ADDITIONAL INFORMATION.
2. ALL DOOR HARDWARE TO BE COMPLIANT WITH THE FEDERAL FAIR HOUSING ACT (FHA).
3. DOORS SHALL BE OPENABLE WITH NO MORE THAN ONE RELEASING OPERATION.
4. PROVIDE ACCESSIBLE THRESHOLDS AT ALL DOORS.
5. ALL UNITS ARE ADAPTABLE PER FHA. SEE SHEET A0.06 FOR ADDITIONAL INFORMATION.
6. ALL DIMENSIONS ARE TO ROUGH FRAMING U.N.O.
7. ALL WALLS ARE 2X4 STUDS UNLESS NOTED OTHERWISE.
8. ALL TENANT SEPERATIONS AND CORRIDOR WALLS ARE 2X6 UNLESS NOTED OTHERWISE.
9. PATIO AT FIRST FLOOR 4" BELOW UNIT FINISH FLOOR.
10. BALCONIES ARE FLUSH WITH GYPCRETE TOPPING. SEE DETAIL.
11. ALL TOILETS SET ON NEOPRENE GASKET WITH INSULATED PIPE TRAP.
12. ALL KITCHEN APPLIANCES TO HAVE STAINLESS STEEL FRONTS.
13. WHERE DRAWINGS ARE IN CONFLICT WITH OTHER DRAWINGS, CONTRACTOR SHALL NOTIFY THE ARCHITECT.
14. PROVIDE BLOCKING FOR GRAB BARS IN ALL BATHROOMS
15. DIMENSION TO STUD UNLESS OTHERWISE NOTED
16. DIMESNION TO FINISH @ CABINETS
17. PROVIDE BLOCKING FOR TV WALL MOUNT, CENTER AT 60" A.F.F.
18. ALL BATHROOM VANITES ARE 21" IN DEPTH

**ROOM FINISH MATERIAL CODE**

| | |
|---|---|
| CPT | CARPET |
| CT | CERAMIC TILE |
| CONC | CONCRETE |
| GWB | GYPSUM WALL BOARD |
| MR GWB | MOISTURE RESISTANT GWB |
| V | SHEET VINYL |
| VWP | VINYL WOOD PLANK |
| VCT | VINYL COMPOSITE TILE |
| WD | WOOD |

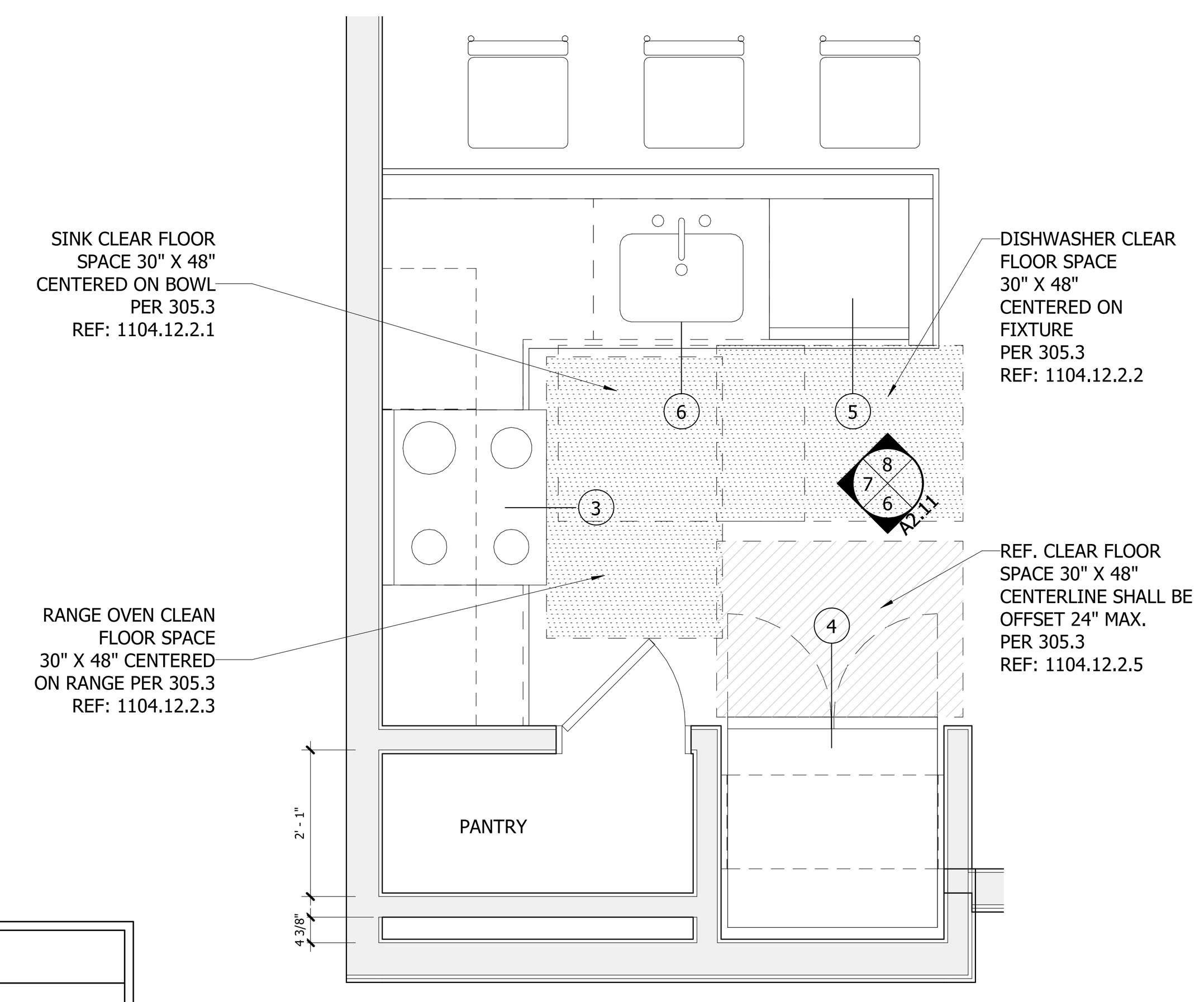


**3 UNIT A - KITCHEN - PLAN**
SCALE : 1/2" = 1'-0"

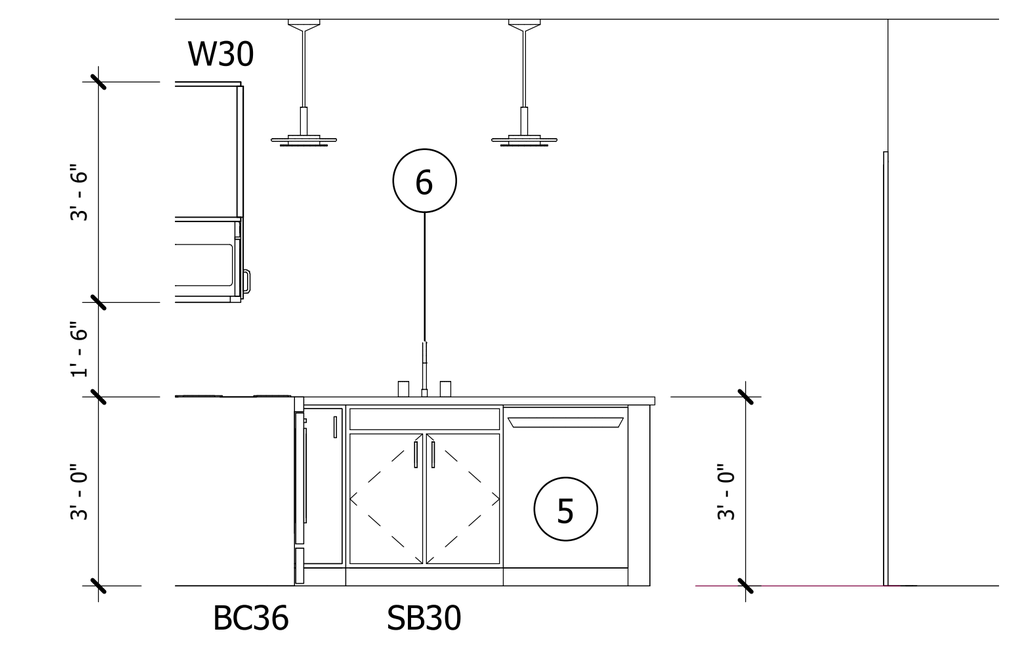


**8 UNIT A - KITCHEN - ELEV 3**
SCALE : 1/4" = 1'-0"

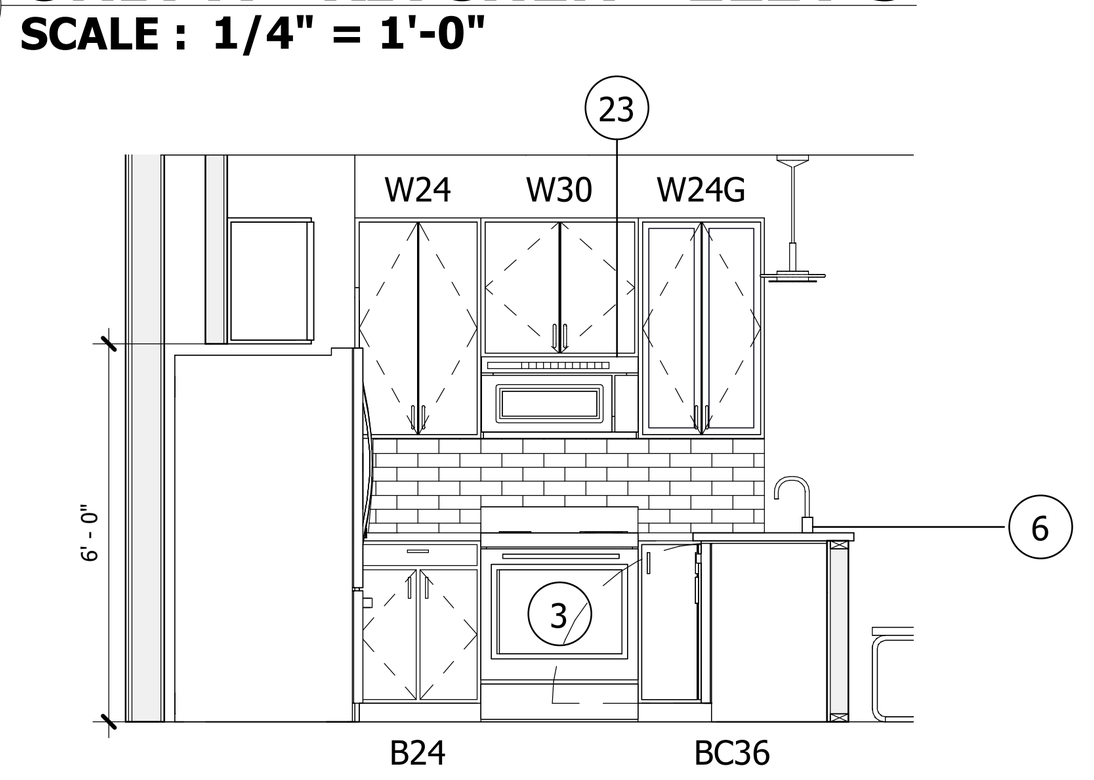


**7 UNIT A - KITCHEN - ELEV 2**
SCALE : 1/4" = 1'-0"

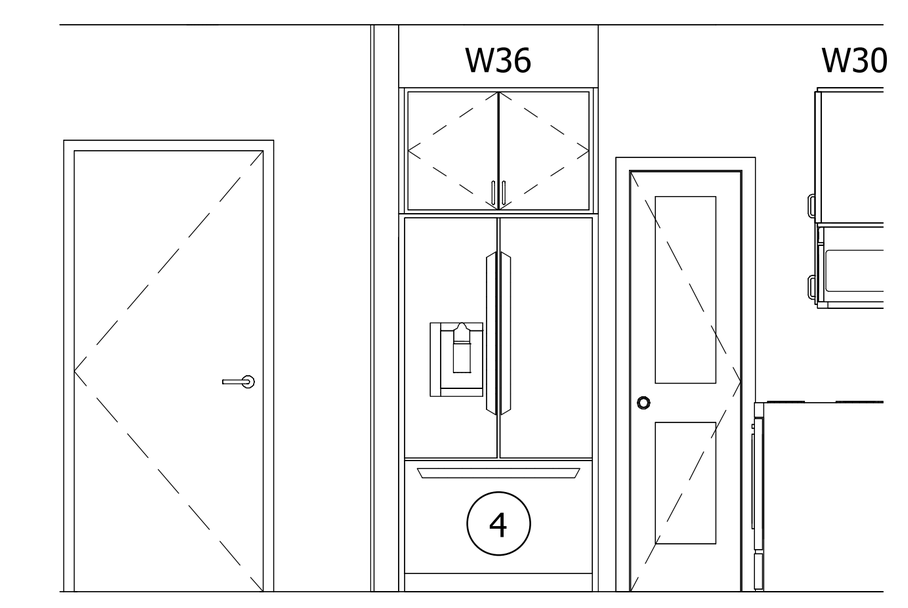


**6 UNIT A - KITCHEN - ELEV 1**
SCALE : 1/4" = 1'-0"

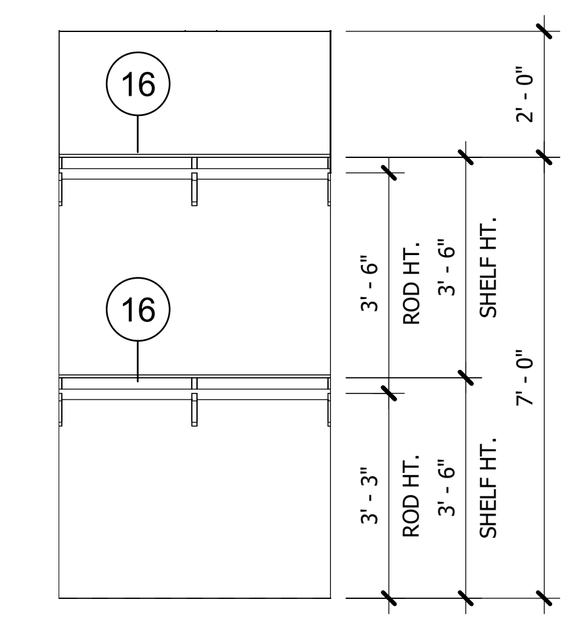


**10 UNIT A - CLOSET 1**
SCALE : 1/4" = 1'-0"

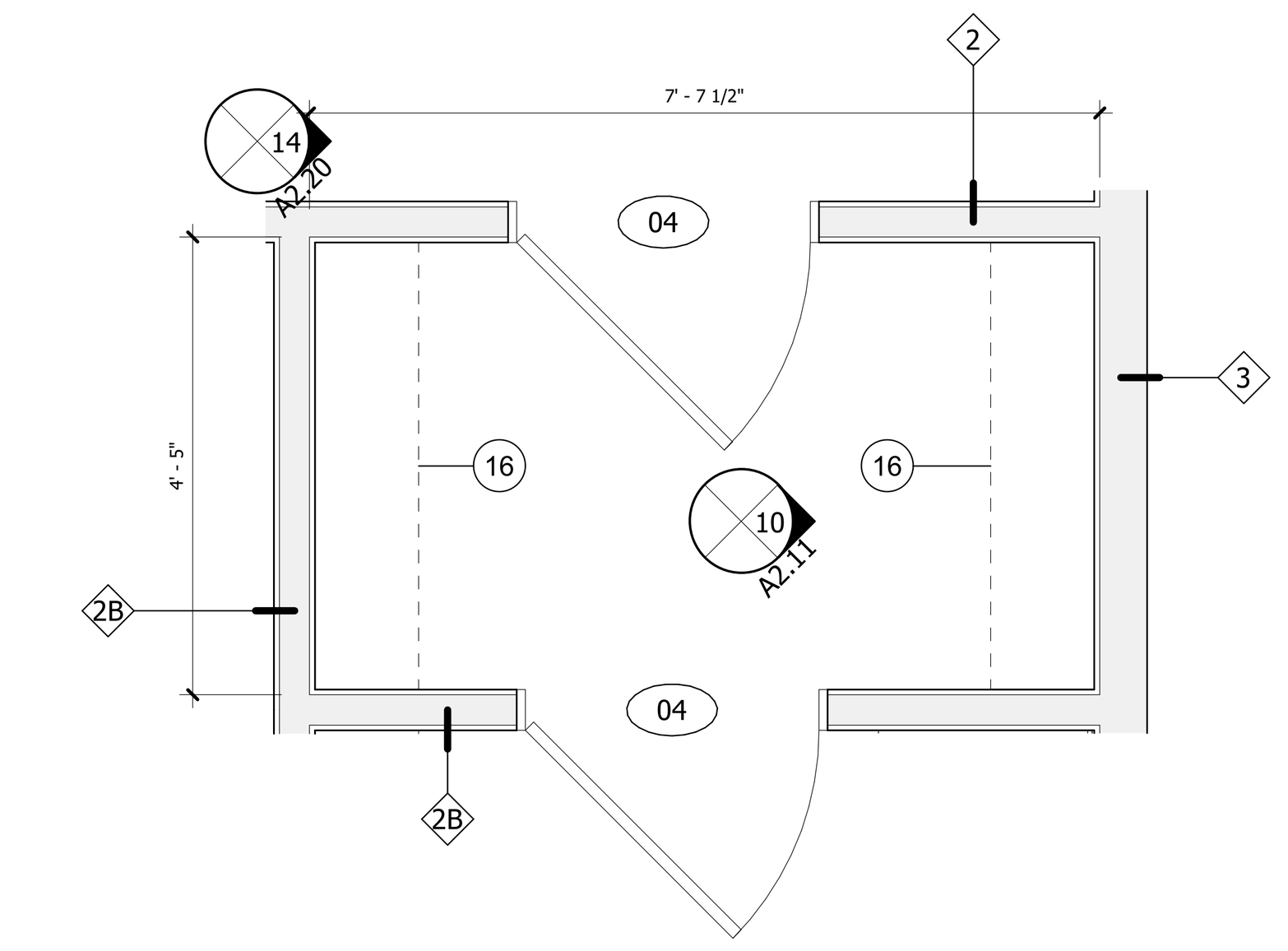


**9 UNIT A - CLOSET 1 - PLAN**
SCALE : 1/2" = 1'-0"

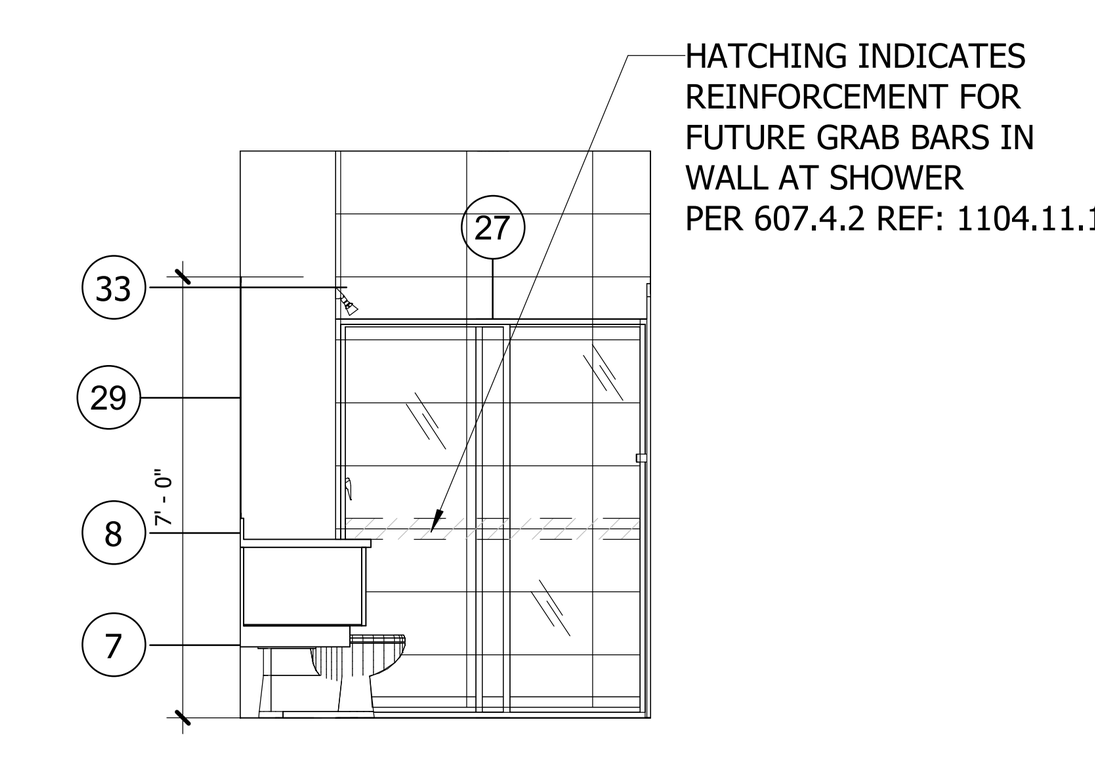


**5 UNIT A - BATHROOM - ELEV 2**
SCALE : 1/4" = 1'-0"

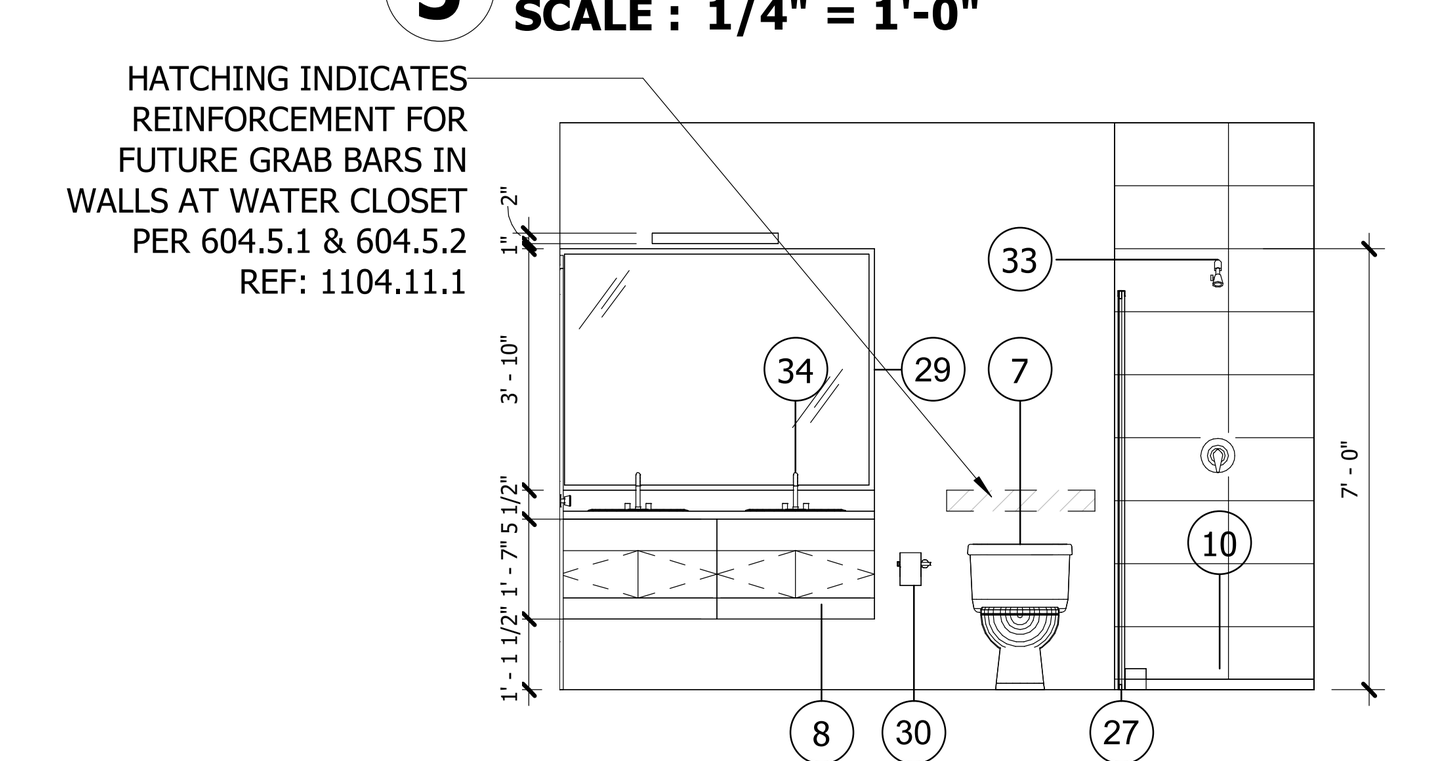


**4 UNIT A - BATHROOM - ELEV 1**
SCALE : 1/4" = 1'-0"

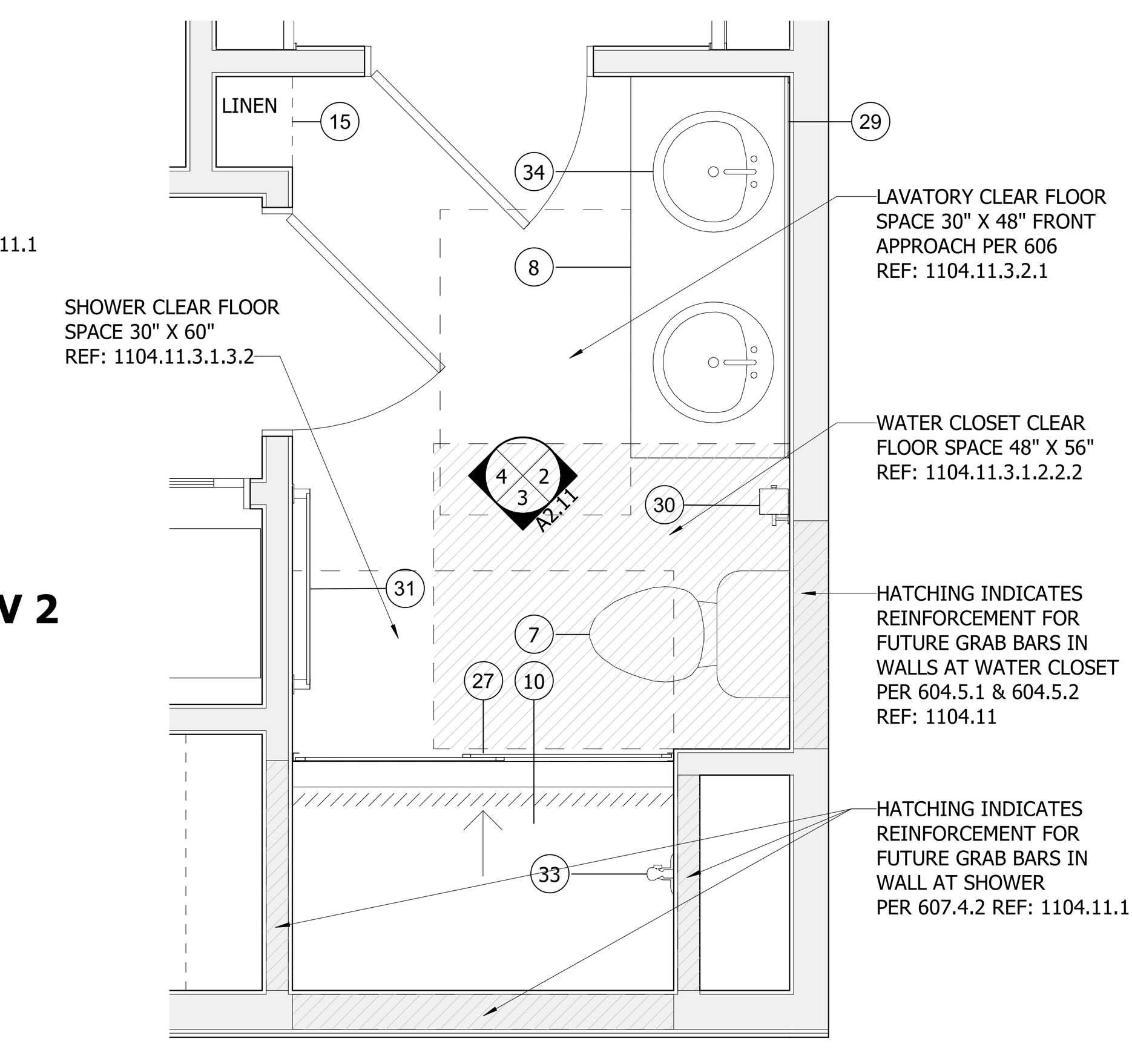


**2 UNIT A - BATHROOM 1 - PLAN**
SCALE : 1/2" = 1'-0"

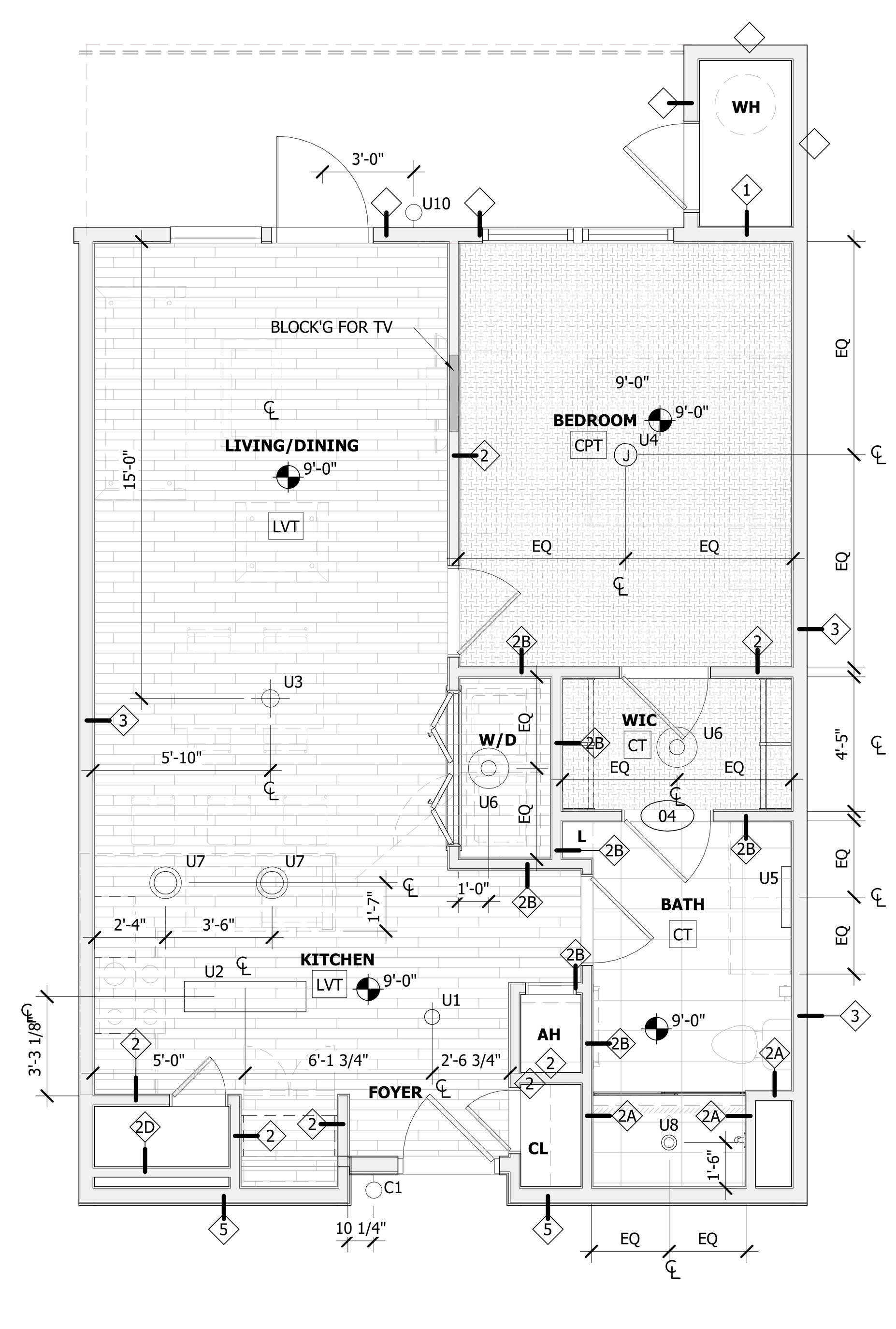


**1A UNIT A RCP**
SCALE : 1/4" = 1'-0"

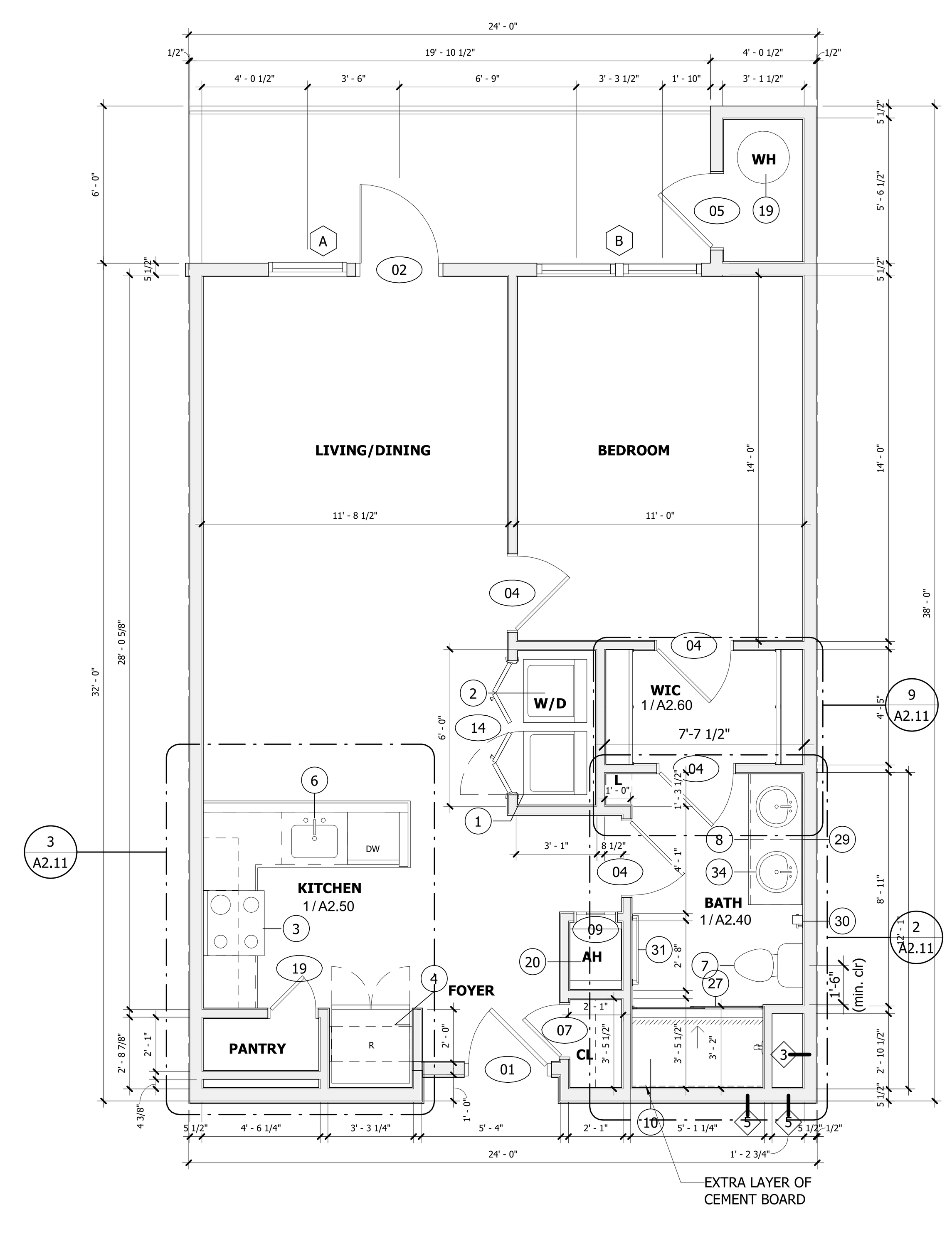


**1 UNIT - A**
SCALE : 1/4" = 1'-0"

| Unit-A | 789 SF |
|---|---|

| ROOM # |
|---|
| UNIT A |
| 107 |
| 109 |
| 110 |
| 116 |
| 117 |
| 121 |
| 149 |
| 152 |
| 154 |
| 209 |
| 210 |
| 216 |
| 217 |
| 221 |
| 249 |
| 252 |
| 254 |
| 309 |
| 310 |
| 316 |
| 317 |
| 321 |
| 349 |
| 352 |
| 354 |
| 409 |
| 410 |
| 416 |
| 417 |
| 421 |
| 449 |
| 452 |
| 454 |
| Grand total: 33 |

ALL REPORTS, PLANS, SPECIFICATIONS AND COMPUTER FILES RELATING TO THIS PROJECT ARE THE PROPERTY OF THE MARTIN ARCHITECTURAL GROUP. THE MARTIN ARCHITECTURAL GROUP RETAINS ALL COMMON LAW, STATUTE AND OTHER RESERVED RIGHTS INCLUDING THE COPYRIGHT THERETO. REPRODUCTION OF THE MATERIAL HEREIN OR SUBSTANTIAL USE WITHOUT WRITTEN PERMISSION OF THE MARTIN ARCHITECTURAL GROUP VIOLATES THE COPYRIGHT LAWS OF THE UNITED STATES AND WILL BE SUBJECT TO LEGAL PROSECUTION.
©2022, The Martin Architectural Group, P.C.

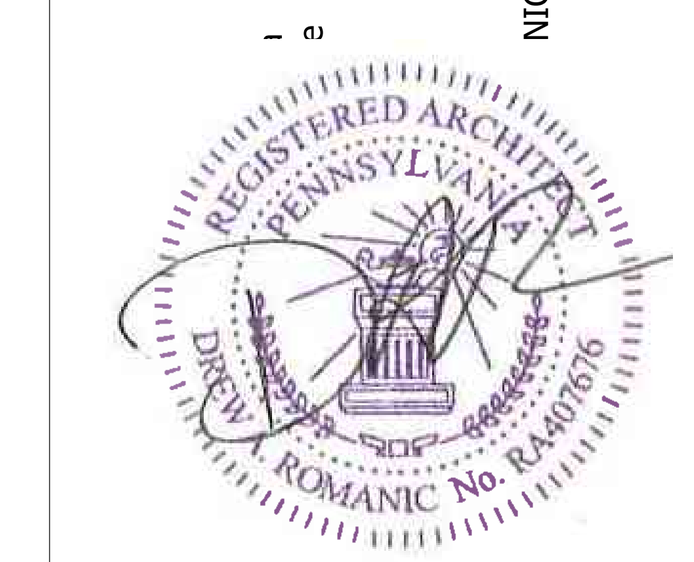

THE MARTIN ARCHITECTURAL GROUP, P.C.
ARCHITECTS AND LAND PLANNERS
A PROFESSIONAL CORPORATION
240 NORTH 22ND STREET, PHILADELPHIA, PA, 19103
P (215) 665-1080 F (215) 561-5064

| | |
|---|---|
| P.A.: | DREW ROMANIC |
| P.M.: | JASON DECAMPLI |
| DRAWN BY: | MAG |
| PROJECT NO: | 1362-12 |

| NO. | REVISION | DATE |
|---|---|---|
| 1 | PERMIT SET | 12/20/22 |

# UNIT PLANS (UNIT A)
## Granite Run Apartment 02
MIDDLETOWN TOWNSHIP, PA

| | |
|---|---|
| SCALE: | AS NOTED |
| DATE: | 12/31/2017 |

# A2.11

©2022, The Martin Architectural Group, P.C.

Printed: 1/13/2023 4:28:31 PM

**DOOR SCHEDULE - DWELLING UNIT**

| MARK | DOOR TYPE | WIDTH | HEIGHT | DOOR MATERIAL | FRAME TYPE | FRAME MATERIAL | FIRE RATING | REMARKS |
|---|---|---|---|---|---|---|---|---|
| 01 | UA | 3'-0" | 7'-0" | MTL | F1 | MTL | 20 min. | UNIT ENTRY - SPRING HINGES |
| 02 | UE | 3'-0" | 7'-0" | VY | F1 | VY | | BALCONY DOOR |
| 03 | UB | 3'-0" | 6'-8" | MTE | F1 | WD | | |
| 04 | UB | 2'-10" | 6'-8" | MTE | F1 | WD | | |
| 05 | UA | 2'-10" | 6'-8" | EM | F1 | MTL | | UNIT EXT. MECH DOOR |
| 06 | UB | 2'-6" | 6'-8" | MTE | F1 | WD | | |
| 07 | UB | 2'-0" | 6'-8" | MTE | F1 | WD | | |
| 08 | UC | 2'-0" | 6'-8" | MTE | F1 | WD | | LOUVERED AIR HANDLER |
| 09 | UC | 1'-6" | 6'-8" | MTE | F1 | WD | | LOUVERED AIR HANDLER |
| 10 | UB | 1'-6" | 6'-8" | MTE | F1 | WD | | |
| 11 | UB | 1'-4" | 6'-8" | MTE | F1 | WD | | |
| 12 | UDD | 4'-0" | 6'-8" | MTE | | WD | | SLIDING BARN DOOR |
| 13 | UBB | 5'-0" | 6'-8" | MTE | F2 | WD | | DOUBLE SWING DOOR |
| 14 | UCC | 5'-0" | 6'-8" | MTE | F2 | WD | | LOUVERED BI-FOLD |
| 15 | UCC | 6'-0" | 6'-8" | MTE | F2 | WD | | LOUVERED BI-FOLD |
| 19 | UB | 1'-9" | 6'-8" | MTE | F1 | WD | | |
| E | | 3'-0" | 7'-0" | | | | | |
| EE | | 6'-0" | 7'-0" | | | | | |
| F | | 6'-0" | 7'-0" | | | | | *RATED GLASS |

## ROOM FINISH SCHEDULE

| SPACE | FLOOR | WALL | CEILING | HEIGHT | REMARKS |
|---|---|---|---|---|---|
| KITCHEN | 3 | A | 1 | 9'-0" | |
| LIVING RM. | 3 | A | 1 | 9'-0" | |
| BEDROOMS | 1 | A | 1 | 9'-0" | |
| DEN | 3 | A | 1 | 9'-0" | |
| BATHS | 4 | B/C | 2 | 9'-0" | |
| CLOSETS | / | A | 1 | 9'-0" | FLOORING: MATCH ADJ. |
| LAUNDRY | 3 | A | 2 | 9'-0" | FLOORING: MATCH ADJ. |
| UNIT-HVAC | / | A | 1 | 9'-0" | FL.: GYPCRETE PAINT-LIGHT GRAY |

### MATERIAL CODE

| FLR. / BASE | | WALL | | CEILING | |
|---|---|---|---|---|---|
| 1 | CPT / WD | A | G.W.B. | 1 | G.W.B. |
| 2 | | B | MR.G.W.B. | 2 | MR.G.W.B. |
| 3 | LVT / WD | C | CT-2 | 3 | |
| 4 | CT / CT | D | | 4 | |
| 5 | | E | | 5 | |
| 6 | | F | | 6 | |
| 7 | | G | | 7 | |
| 8 | | H | | 8 | |

MATERIAL GLOSSARY

| | |
|---|---|
| CPT | CARPET - SHAW GULF WINDS - COLOR: 532 MINERAL |
| CT-1 | CERAMIC TILE - 12X24 FLORIM MATERIA - COLOR: HONED 02 |
| CT-2 | CERAMIC TILE - 12X24 FLORIM MATERIA - COLOR: STONE CALACATTA |
| G.W.B. | GYPSUM WALL BOARD |
| MR.G.W.B. | MOISTURE RESISTANT G.W.B. |
| LVT | VINYL WOOD PLANK - SHAW TERRAIN 12 MIL - COLOR: 766 ECHO |
| WD. | WOOD |

## UNIT DOOR TYPES

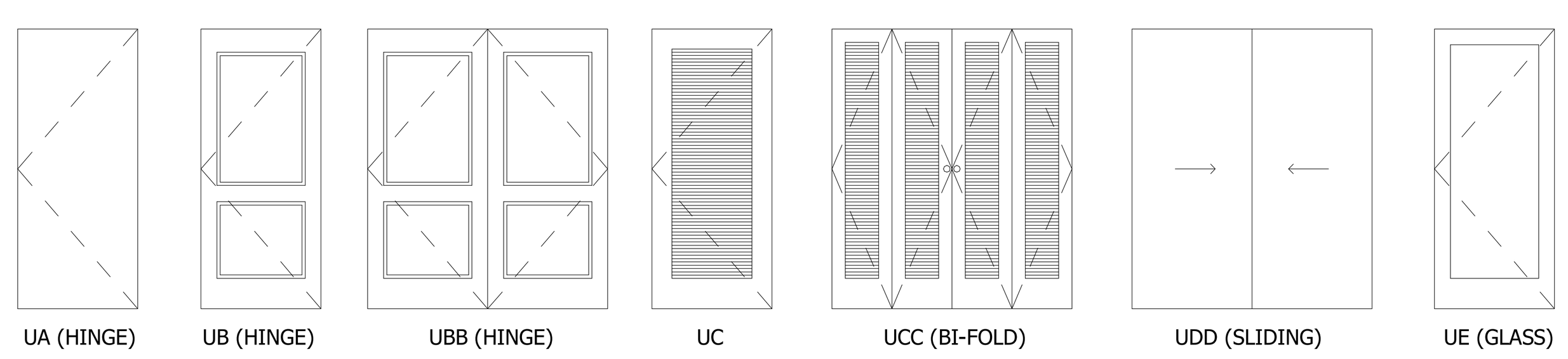


## FRAME TYPES

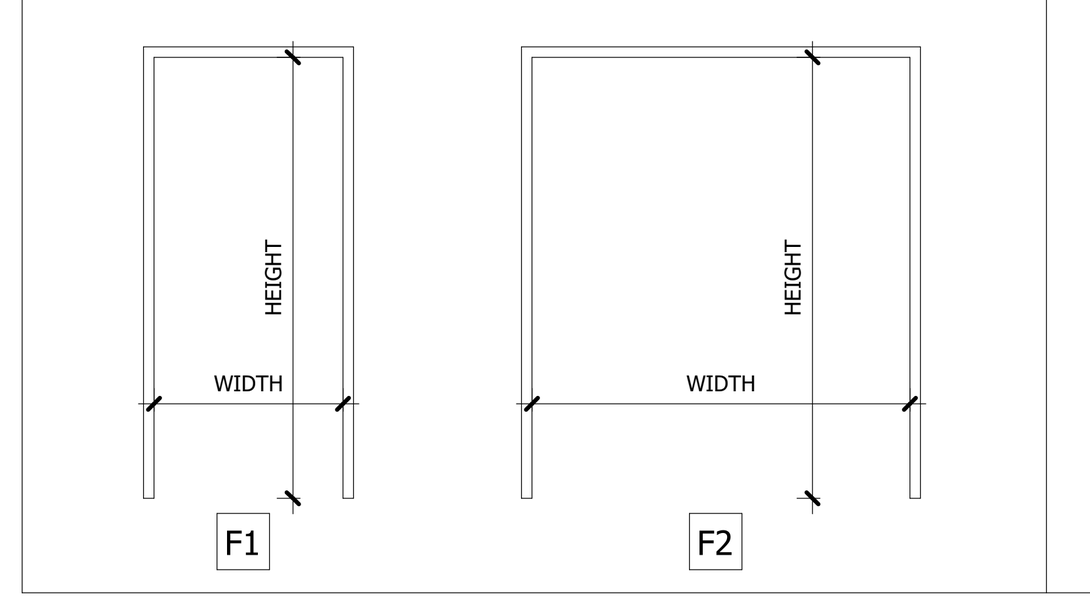


**DOOR/FRAME MATERIAL KEY:**

| | |
|---|---|
| AL | ALUMINUM |
| EM | EXTERIOR METAL |
| GL | GLASS |
| HC | HOLLOW CORE |
| HM | HOLLOW METAL |
| MTL | METAL |
| SC | SOLID CORE |
| SR | STILE & RAIL |
| VY | VINYL |
| WD | WOOD |
| MTE | MASONITE |

**WINDOW SCHEDULE**

| MARK | WIDTH | HEIGHT | WINDOW TYPE | CONSTRUCTION TYPE | COMMENTS |
|---|---|---|---|---|---|
| A | 3'-0" | 6'-0" | SINGLE HUNG | VINYL | All windows to be provided with opening limiters. See specifications. |
| B | 6'-3 1/2" | 6'-0" | SINGLE HUNG | VINYL | All windows to be provided with opening limiters. See specifications. |

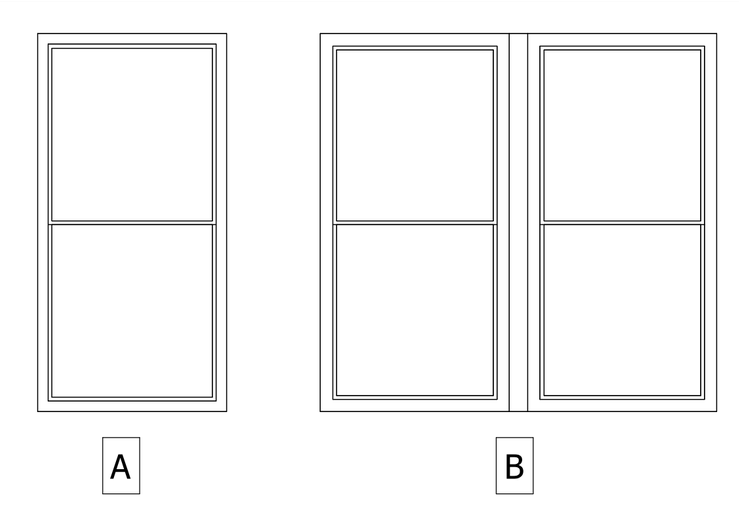


NOTE: (2) 2X6 FRT STUDS PROVIDED BETWEEN GROUP WINDOWS. (TYPICAL)
PROVIDE 4" LIMITATION FOR WINDOW LIMITERS ON ALL WINDOWS

**LIGHT FIXTURE LEGEND**

| | |
|---|---|
| U1 | LITHONIA FMSATL-16-20840-BN; SEMI FLUSH MOUNT |
| U2 | LITHONIA FMFL-30840-SATL-BN; LINEAR FLUSH MOUNT |
| U3 | LITHONIA DFMADRL-14-F01; FMPANL-14-20840M6; LED SURFACE MOUNT DRUM |
| U4 | SATCO COVER PLATE |
| U5 | PROGRESS P300187-009-30; LED BATH VANITY |
| U6 | LITHONIA FMMUSL-9-14840-WH; LED CLOSET MUSHROOM |
| U7 | LITHONIA MDPC-BNP-M6; DGDT 1003 M6 |
| U8 | COOPER SMD6R-12-930-WH; 1200 LUMEN SLIM SURFACE (120 VOLT ONLY) |
| U9 | NUVO 62-1161; 7" LED FLUSH MOUNT DISCK |
| U10 | LITHONIA OLWPLED-P1-40K-120-PE-BZ; LED MINI WALL PACK |

**UNIT PLAN AND INTERIOR ELEVATION KEYNOTES**

| Number | Description |
|---|---|
| 1 | WASHER |
| 2 | DRYER |
| 3 | RANGE / OVEN |
| 4 | REFRIGERATOR |
| 5 | DISHWASHER |
| 6 | KITCHEN SINK / FAUCET |
| 7 | TOILET |
| 8 | VANITY - SEE ELEVATION FOR SIZE |
| 9 | 30"X60" TUB |
| 10 | 36"X60" SHOWER BASE |
| 11 | 32"X60" SHOWER BASE |
| 12 | ACCESSIBLE THRESHOLD - MARBLE |
| 13 | ACCESSIBLE THRESHOLD - ALUMINIUM |
| 14 | SOFFIT OVER REFRIGERATOR AND BEHIND CABINET |
| 15 | LINEN SHELVES (5) PER SPECIFICATION |
| 16 | WIRE SHEVLING |
| 17 | KNEE WALL BELOW COUNTERTOP |
| 18 | BALCONY RAILING @ 42" HIGH |
| 19 | WALL MOUNTED HOT WATER HEATER |
| 20 | HVAC UNIT MOUNTED ON WALL |
| 21 | PRE ROCK BEHIND BATHING FIXTURES |
| 22 | CUBBIE CABINETS |
| 23 | MICROWAVE WITH RECIRCULATION HOOD |
| 24 | WALL TILE BETWEEN CONTERTOP AND WALL CABINET. SEE 1D DRAWING |
| 25 | BLOCKING FOR GRAB BAR. SEE FIG. 4- SHEET A0.06 |
| 26 | 24" HORIZONTAL GRAB BAR @ TUB BACK WALL. SEE FIG. 4 - SHEET A0.06 |
| 27 | SHOWER ROD |
| 28 | NOT USED |
| 29 | PAINTED FRAME MIRROR |
| 30 | TOILET TISSUE HOLDER @ 26" A.F.F. |
| 31 | 30" TOWEL BAR |
| 32 | ROBE HOOK |
| 33 | SHOWER HEAD |
| 34 | VANITY SINK BOWL |

**NOTES:**

1. SEE SPECIFICATIONS FOR ADDITIONAL INFORMATION.
2. ALL DOOR HARDWARE TO BE COMPLIANT WITH THE FEDERAL FAIR HOUSING ACT (FHA).
3. DOORS SHALL BE OPENABLE WITH NO MORE THAN ONE RELEASING OPERATION.
4. PROVIDE ACCESSIBLE THRESHOLDS AT ALL DOORS.
5. ALL UNITS ARE ADAPTABLE PER FHA. SEE SHEET A0.06 FOR ADDITIONAL INFORMATION.
6. ALL DIMENSIONS ARE TO ROUGH FRAMING U.N.O.
7. ALL WALLS ARE 2X4 STUDS UNLESS NOTED OTHERWISE.
8. ALL TENANT SEPERATIONS AND CORRIDOR WALLS ARE 2X6 UNLESS NOTED OTHERWISE.
9. PATIO AT FIRST FLOOR 4" BELOW UNIT FINISH FLOOR.
10. BALCONIES ARE FLUSH WITH GYPCRETE TOPPING. SEE DETAIL.
11. ALL TOILETS SET ON NEOPRENE GASKET WITH INSULATED PIPE TRAP.
12. ALL KITCHEN APPLIANCES TO HAVE STAINLESS STEEL FRONTS.
13. WHERE DRAWINGS ARE IN CONFLICT WITH OTHER DRAWINGS, CONTRACTOR SHALL NOTIFY THE ARCHITECT.
14. PROVIDE BLOCKING FOR GRAB BARS IN ALL BATHROOMS
15. DIMENSION TO STUD UNLESS OTHERWISE NOTED
16. DIMESNION TO FINISH @ CABINETS
17. PROVIDE BLOCKING FOR TV WALL MOUNT, CENTER AT 60" A.F.F.
18. ALL BATHROOM VANITES ARE 21" IN DEPTH

**ROOM FINISH MATERIAL CODE**

| | |
|---|---|
| CPT | CARPET |
| CT | CERAMIC TILE |
| CONC | CONCRETE |
| GWB | GYPSUM WALL BOARD |
| MR GWB | MOISTURE RESISTANT GWB |
| V | SHEET VINYL |
| VWP | VINYL WOOD PLANK |
| VCT | VINYL COMPOSITE TILE |
| WD | WOOD |

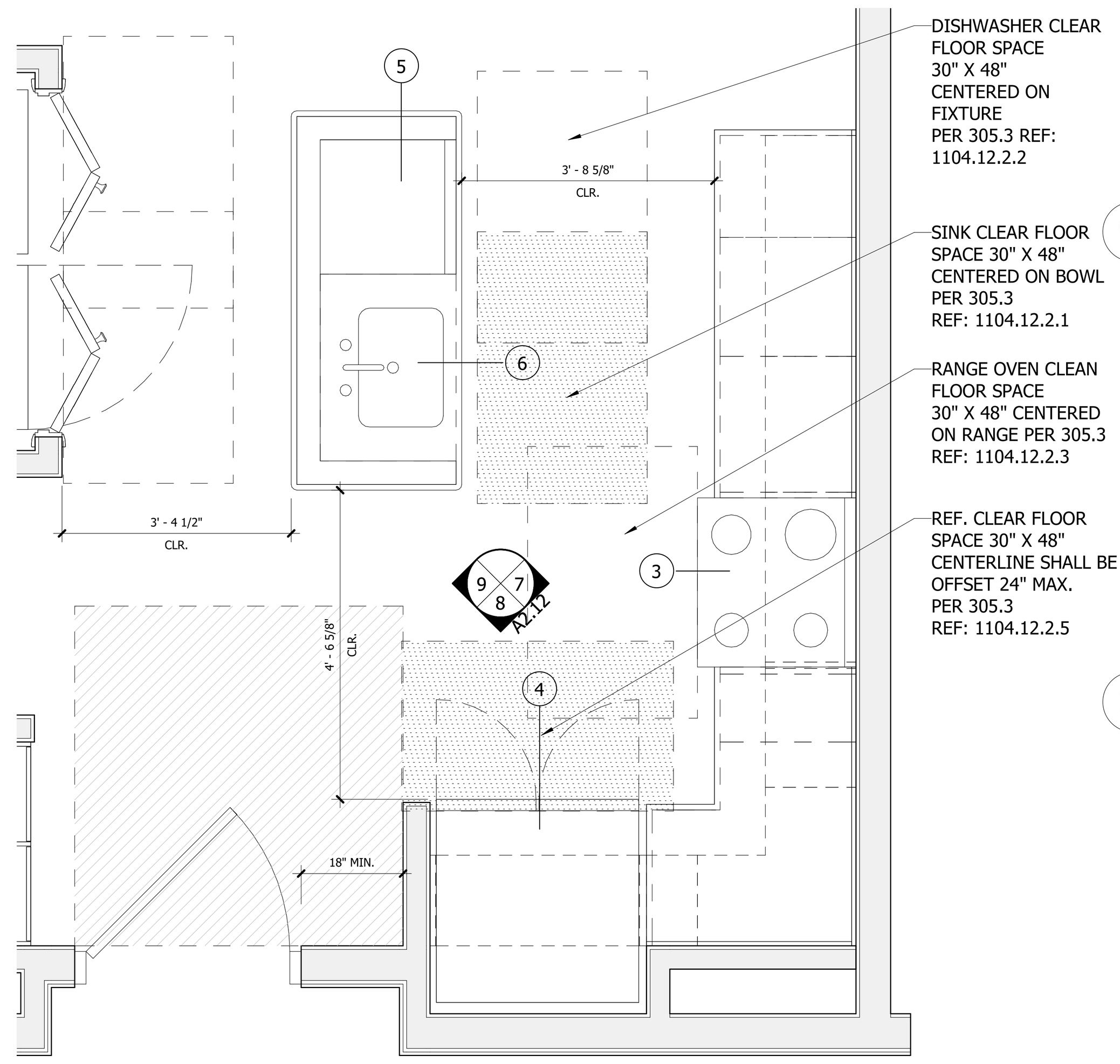


3 **UNIT B - KITCHEN - PLAN**
SCALE : 1/2" = 1'-0"

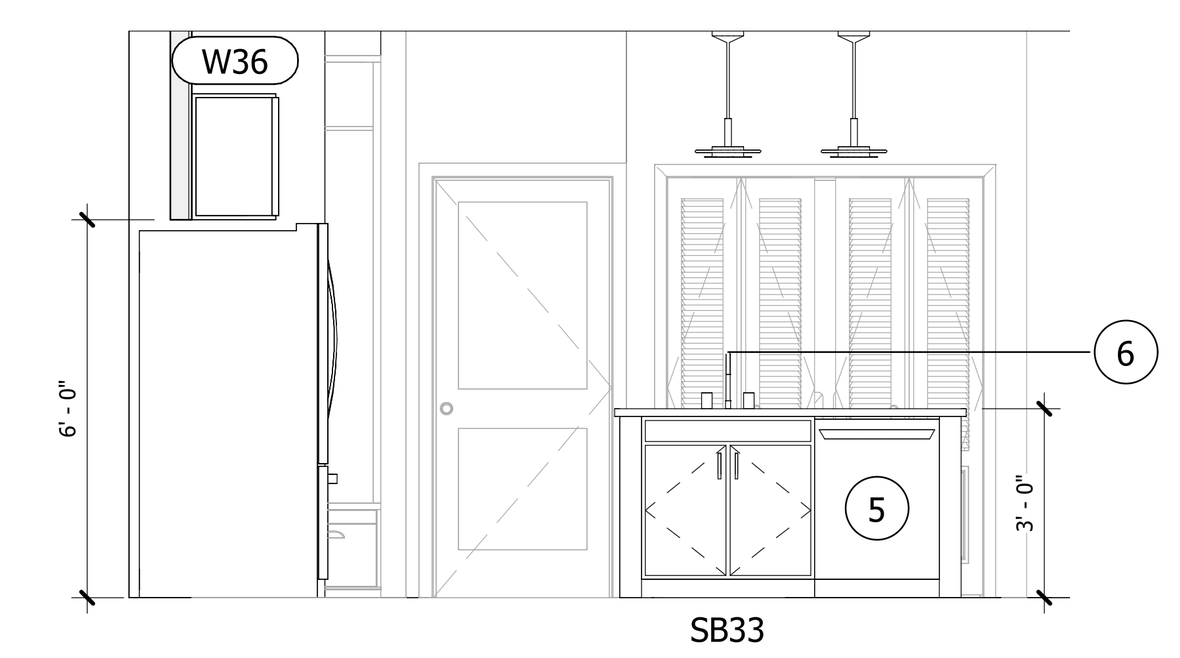


9 **UNIT B - KITCHEN - ELEV 3**
SCALE : 1/4" = 1'-0"

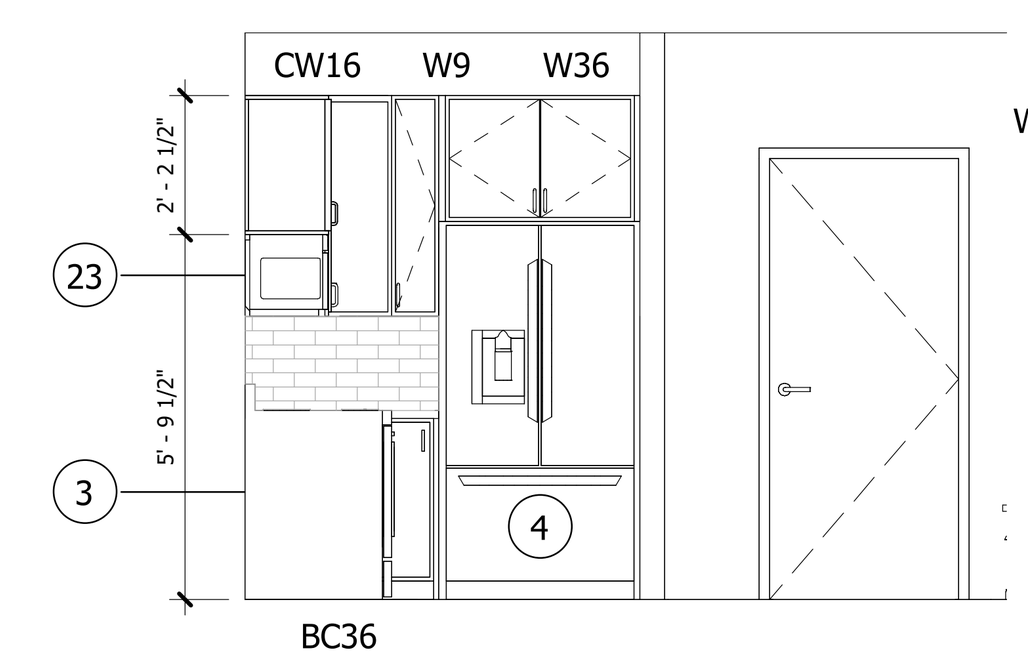


8 **UNIT B - KITCHEN - ELEV 2**
SCALE : 1/4" = 1'-0"

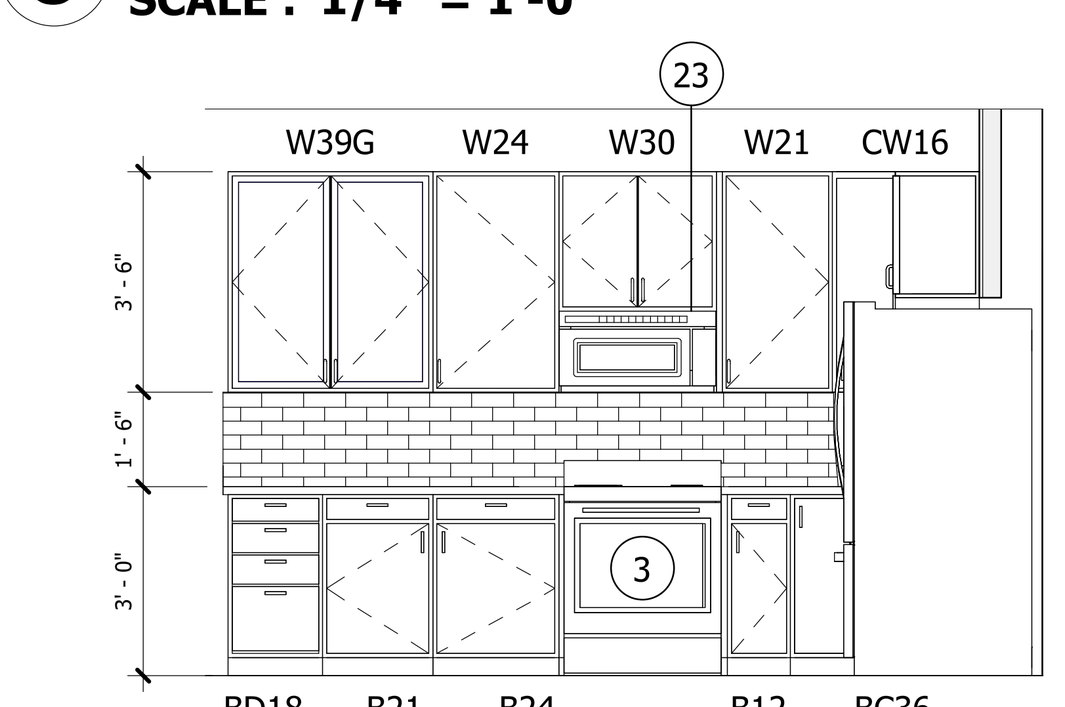


7 **UNIT B - KITCHEN - ELEV 1**
SCALE : 1/4" = 1'-0"

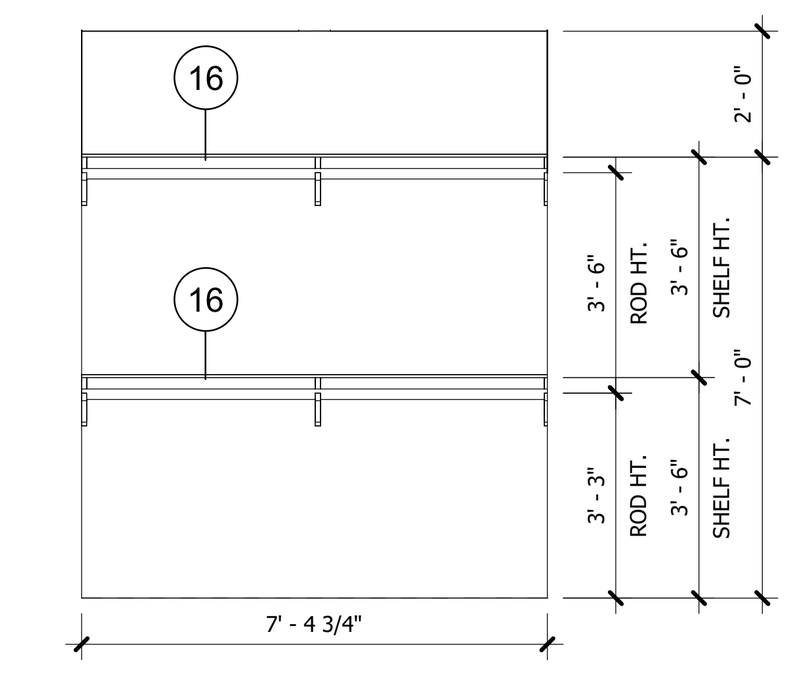


11 **UNIT B - CLOSET 1**
SCALE : 1/4" = 1'-0"

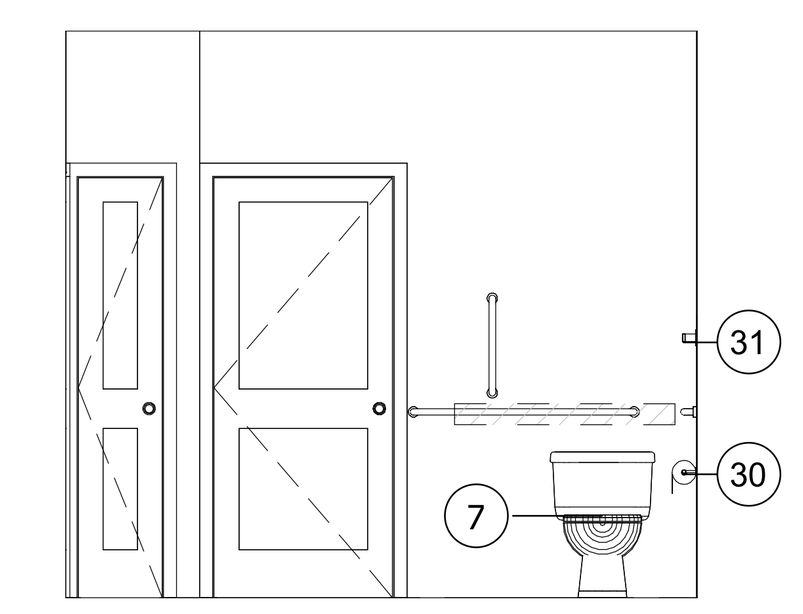

6 **UNIT B - BATHROOM - ELEV 3**
SCALE : 1/4" = 1'-0"

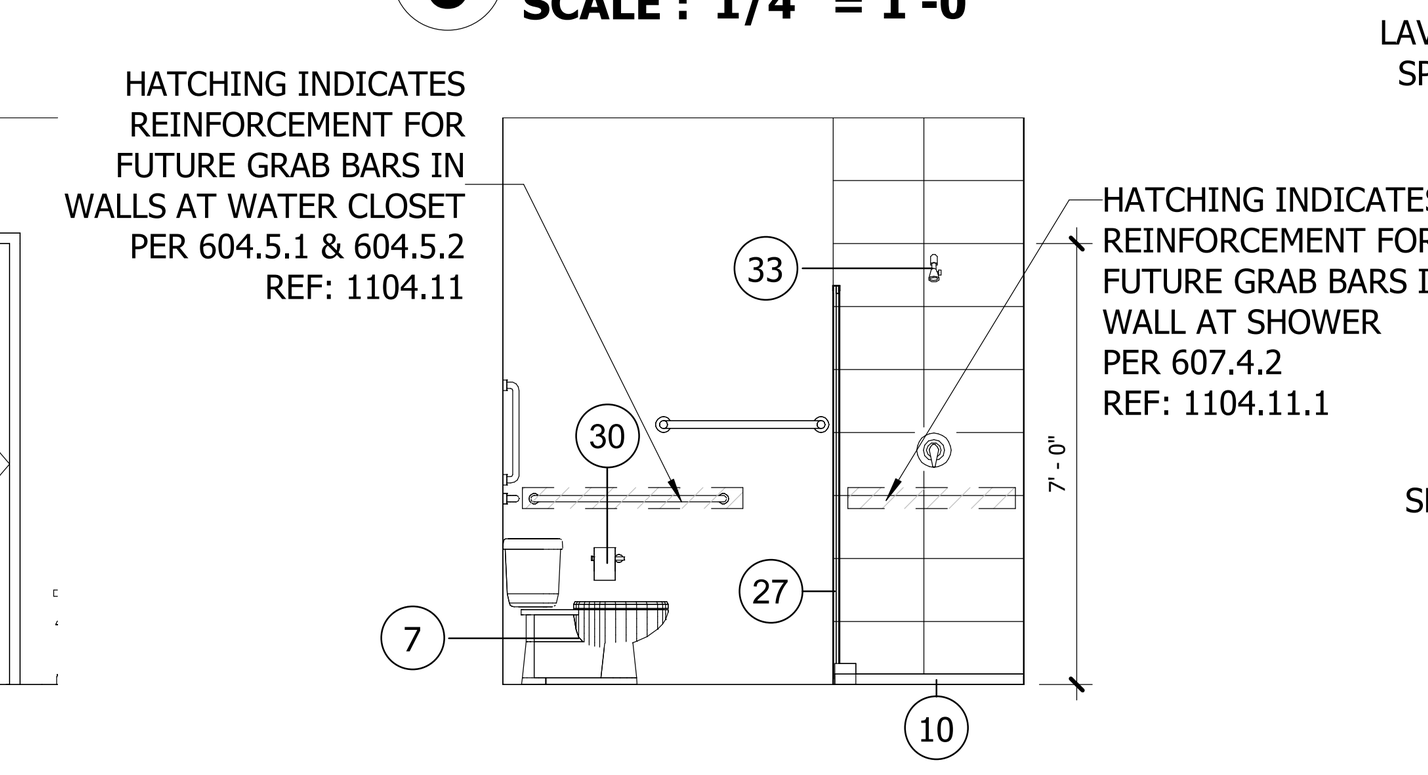


5 **UNIT B - BATHROOM - ELEV 2**
SCALE : 1/4" = 1'-0"

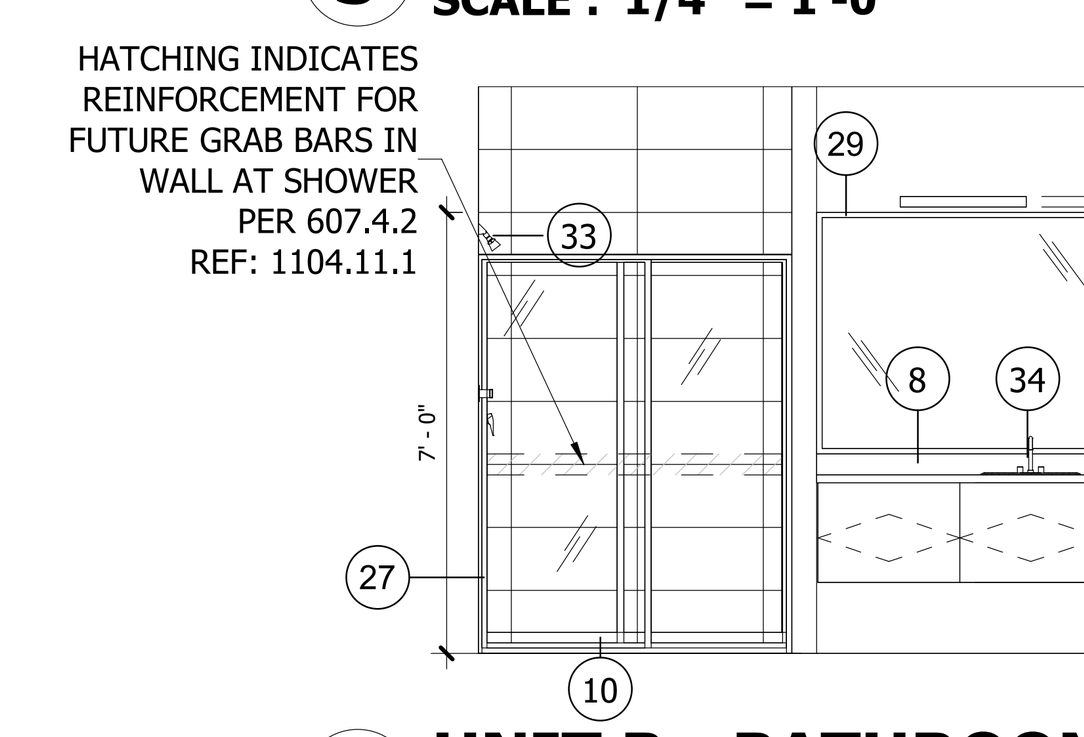


4 **UNIT B - BATHROOM - ELEV 1**
SCALE : 1/4" = 1'-0"

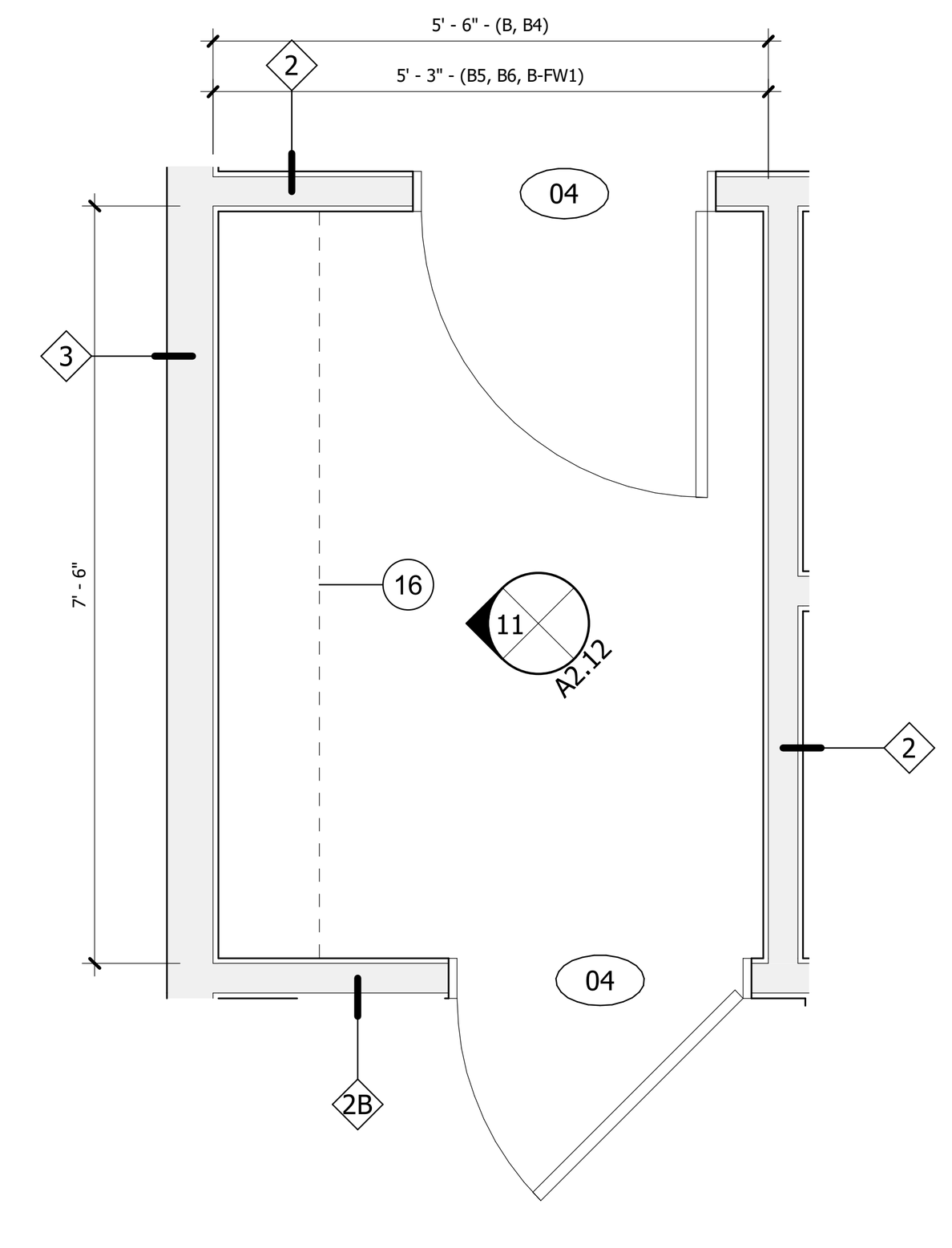


10 **UNIT B - CLOSET 1 - PLAN**
SCALE : 1/2" = 1'-0"

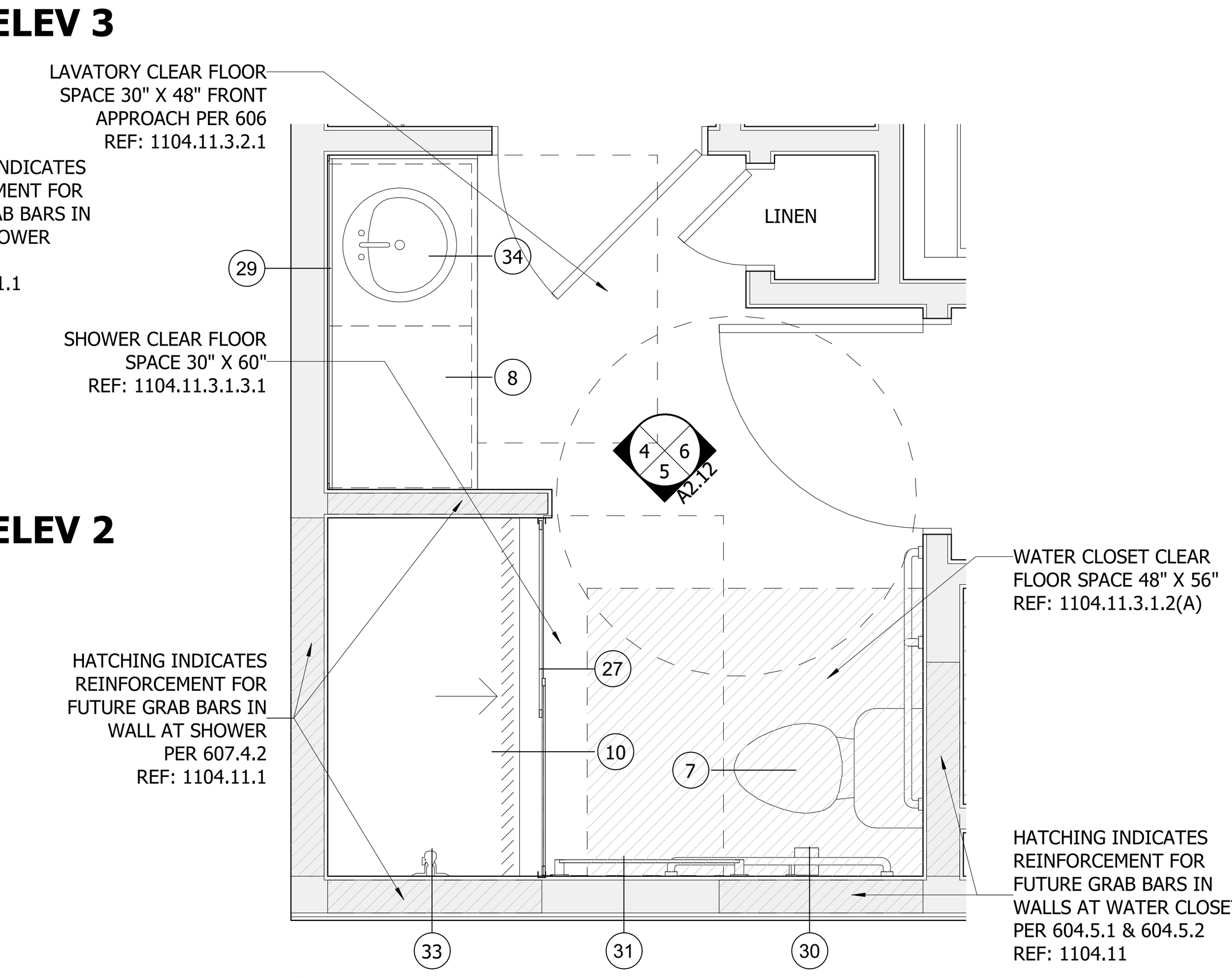


2 **UNIT B - BATHROOM 1 - PLAN**
SCALE : 1/2" = 1'-0"

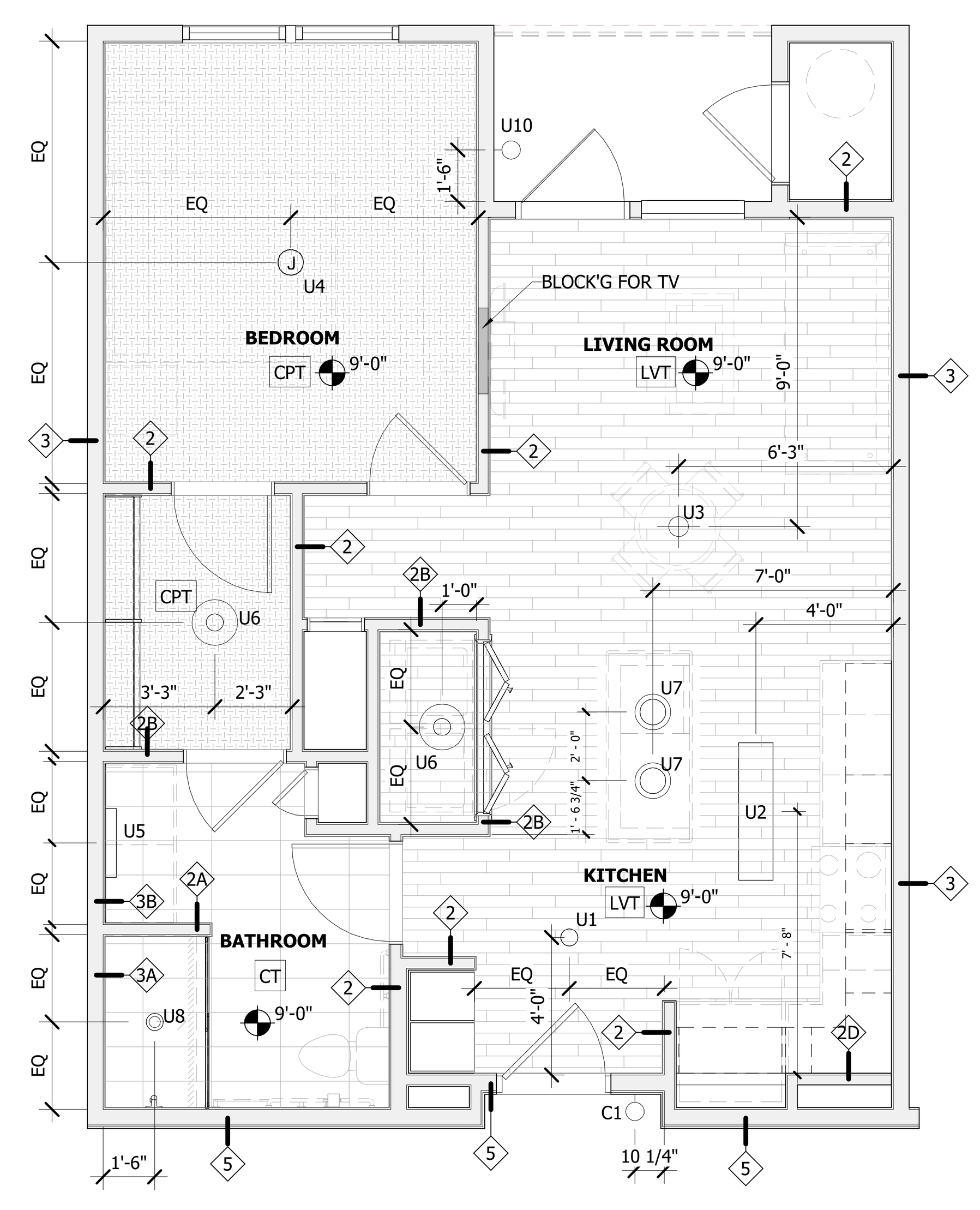


1A **UNIT B RCP**
SCALE : 1/4" = 1'-0"

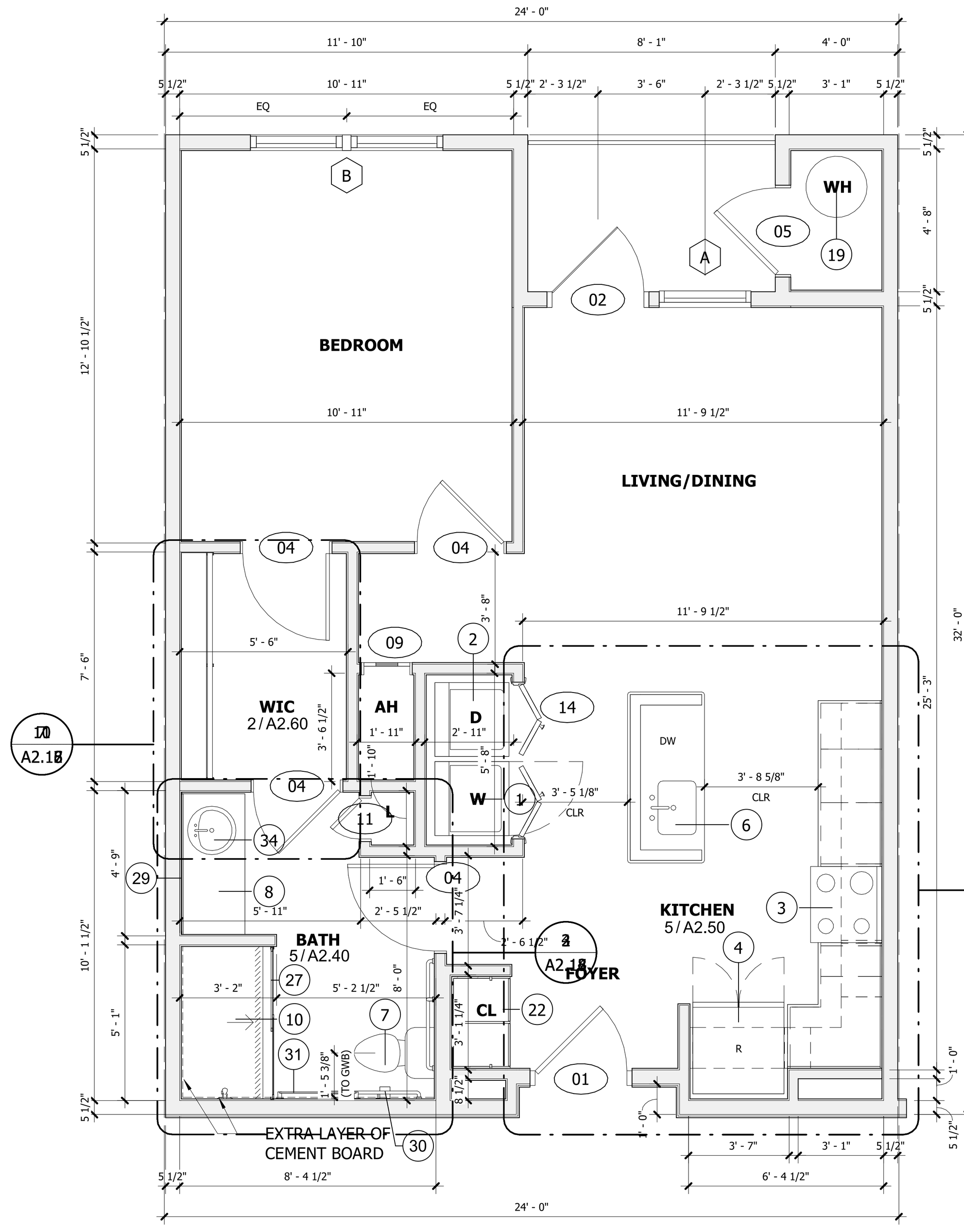


1 **UNIT - B**
SCALE : 1/4" = 1'-0"

| Unit-B | 723 SF |
|---|---|

| ROOM # |
|---|
| UNIT B |
| 104 |
| 115 |
| 122 |
| 125 |
| 142 |
| 145 |
| 151 |
| 204 |
| 215 |
| 222 |
| 225 |
| 232 |
| 242 |
| 245 |
| 251 |
| 304 |
| 315 |
| 322 |
| 325 |
| 332 |
| 342 |
| 345 |
| 351 |
| 404 |
| 415 |
| 422 |
| 425 |
| 432 |
| 442 |
| 445 |
| 451 |
| Grand total: 31 |

ALL REPORTS, PLANS, SPECIFICATIONS AND COMPUTER FILES RELATING TO THIS PROJECT ARE THE PROPERTY OF THE MARTIN ARCHITECTURAL GROUP. THE MARTIN ARCHITECTURAL GROUP RETAINS ALL COMMON LAW, STATUTE AND OTHER RESERVED RIGHTS INCLUDING THE COPYRIGHT THERETO. REPRODUCTION OF THE MATERIAL HEREIN OR SUBSTANTIAL USE WITHOUT WRITTEN PERMISSION OF THE MARTIN ARCHITECTURAL GROUP VIOLATES THE COPYRIGHT LAWS OF THE UNITED STATES AND WILL BE SUBJECT TO LEGAL PROSECUTION.
©2022, The Martin Architectural Group, P.C.

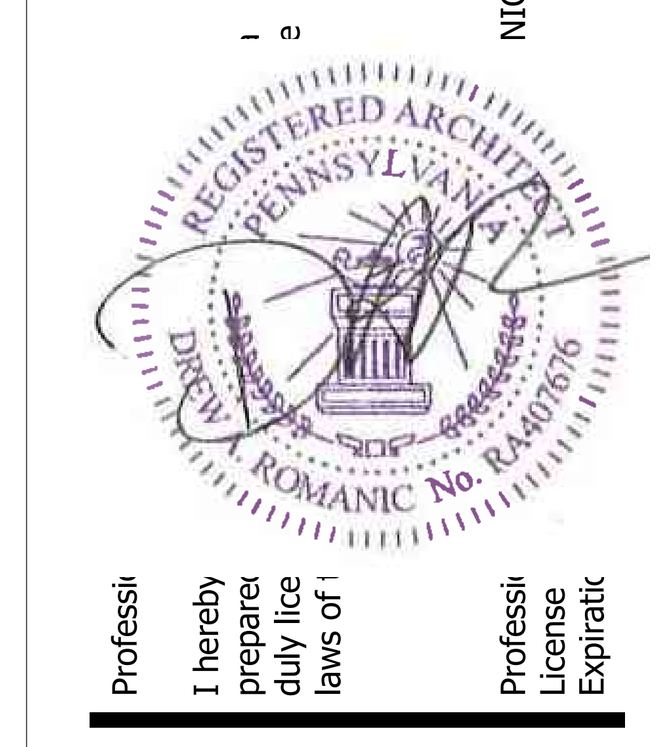

THE MARTIN ARCHITECTURAL GROUP, P.C.
ARCHITECTS AND LAND PLANNERS
A PROFESSIONAL CORPORATION
240 NORTH 22ND STREET, PHILADELPHIA, PA, 19103
P (215) 665-1080 F (215) 561-5064

| | |
|---|---|
| P.A.: | DREW ROMANIC |
| P.M.: | JASON DECAMPLI |
| DRAWN BY: | Author |
| PROJECT NO: | 1362-12 |

| NO. | REVISION | DATE |
|---|---|---|
| 1 | PERMIT SET | 12/20/22 |

UNIT PLANS (UNIT B)
**Granite Run Apartment 02**
MIDDLETOWN TOWNSHIP, PA

| | |
|---|---|
| SCALE: | |
| DATE: | 09/09/22 |

**A2.12**

©2022, The Martin Architectural Group, P.C.

Printed: 1/13/2023 4:28:45 PM

## DOOR SCHEDULE - DWELLING UNIT

| MARK | DOOR TYPE | WIDTH | HEIGHT | DOOR MATERIAL | FRAME TYPE | FRAME MATERIAL | FIRE RATING | REMARKS |
|---|---|---|---|---|---|---|---|---|
| 01 | UA | 3'-0" | 7'-0" | MTL | F1 | MTL | 20 min. | UNIT ENTRY - SPRING HINGES |
| 02 | UE | 3'-0" | 7'-0" | VY | F1 | VY | | BALCONY DOOR |
| 03 | UB | 3'-0" | 6'-8" | MTE | F1 | WD | | |
| 04 | UB | 2'-10" | 6'-8" | MTE | F1 | WD | | |
| 05 | UA | 2'-10" | 6'-8" | EM | F1 | MTL | | UNIT EXT. MECH DOOR |
| 06 | UB | 2'-6" | 6'-8" | MTE | F1 | WD | | |
| 07 | UB | 2'-0" | 6'-8" | MTE | F1 | WD | | |
| 08 | UC | 2'-0" | 6'-8" | MTE | F1 | WD | | LOUVERED AIR HANDLER |
| 09 | UC | 1'-6" | 6'-8" | MTE | F1 | WD | | LOUVERED AIR HANDLER |
| 10 | UB | 1'-6" | 6'-8" | MTE | F1 | WD | | |
| 11 | UB | 1'-4" | 6'-8" | MTE | F1 | WD | | |
| 12 | UDD | 4'-0" | 6'-8" | MTE | | WD | | SLIDING BARN DOOR |
| 13 | UBB | 5'-0" | 6'-8" | MTE | F2 | WD | | DOUBLE SWING DOOR |
| 14 | UCC | 5'-0" | 6'-8" | MTE | F2 | WD | | LOUVERED BI-FOLD |
| 15 | UCC | 6'-0" | 6'-8" | MTE | F2 | WD | | LOUVERED BI-FOLD |
| 19 | UB | 1'-9" | 6'-8" | MTE | F1 | WD | | |
| E | | 3'-0" | 7'-0" | | | | | |
| EE | | 6'-0" | 7'-0" | | | | | |
| F | | 6'-0" | 7'-0" | | | | | *RATED GLASS |

## ROOM FINISH SCHEDULE

| SPACE | FLOOR | WALL | CEILING | HEIGHT | REMARKS |
|---|---|---|---|---|---|
| KITCHEN | 3 | A | 1 | 9'-0" | |
| LIVING RM. | 3 | A | 1 | 9'-0" | |
| BEDROOMS | 1 | A | 1 | 9'-0" | |
| DEN | 3 | A | 1 | 9'-0" | |
| BATHS | 4 | B/C | 2 | 9'-0" | |
| CLOSETS | | A | 1 | 9'-0" | FLOORING: MATCH ADJ. |
| LAUNDRY | 3 | A | 2 | 9'-0" | FLOORING: MATCH ADJ. |
| UNIT-HVAC | | A | 1 | 9'-0" | FL.: GYPCRETE PAINT-LIGHT GRAY |

### MATERIAL CODE

| FLR. / BASE | | WALL | | CEILING | |
|---|---|---|---|---|---|
| 1 | CPT / WD | A | G.W.B. | 1 | G.W.B. |
| 2 | | B | MR.G.W.B. | 2 | MR.G.W.B. |
| 3 | LVT / WD | C | CT-2 | 3 | |
| 4 | CT / CT | D | | 4 | |
| 5 | | E | | 5 | |
| 6 | | F | | 6 | |
| 7 | | G | | 7 | |
| 8 | | H | | 8 | |

MATERIAL GLOSSARY

| | |
|---|---|
| CPT | CARPET - SHAW GULF WINDS - COLOR: 532 MINERAL |
| CT-1 | CERAMIC TILE - 12X24 FLORIM MATERIA - COLOR: HONED 02 |
| CT-2 | CERAMIC TILE - 12X24 FLORIM MATERIA - COLOR: STONE CALACATTA |
| G.W.B. | GYPSUM WALL BOARD |
| MR.G.W.B. | MOISTURE RESISTANT G.W.B. |
| LVT | VINYL WOOD PLANK - SHAW TERRAIN 12 MIL - COLOR: 766 ECHO |
| WD. | WOOD |

## UNIT DOOR TYPES

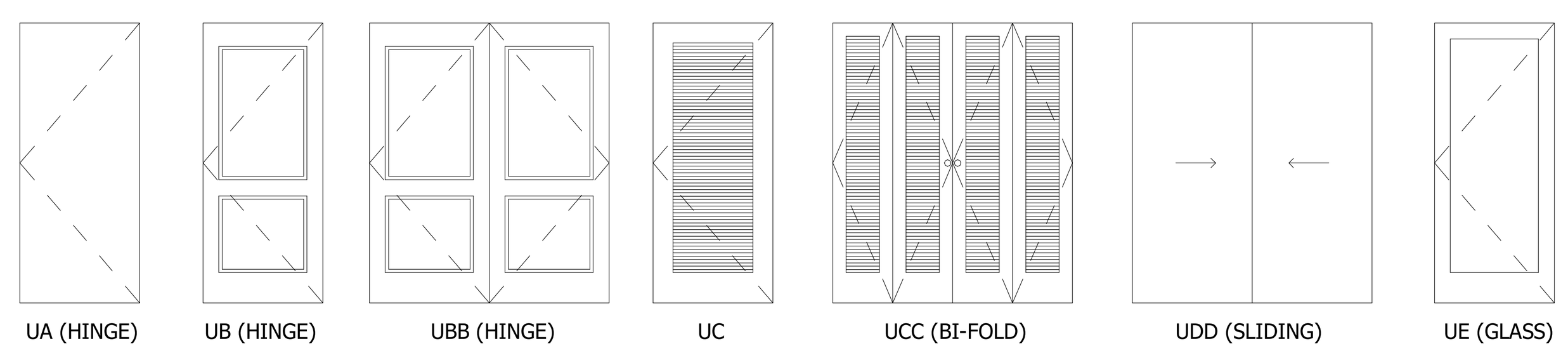


## FRAME TYPES

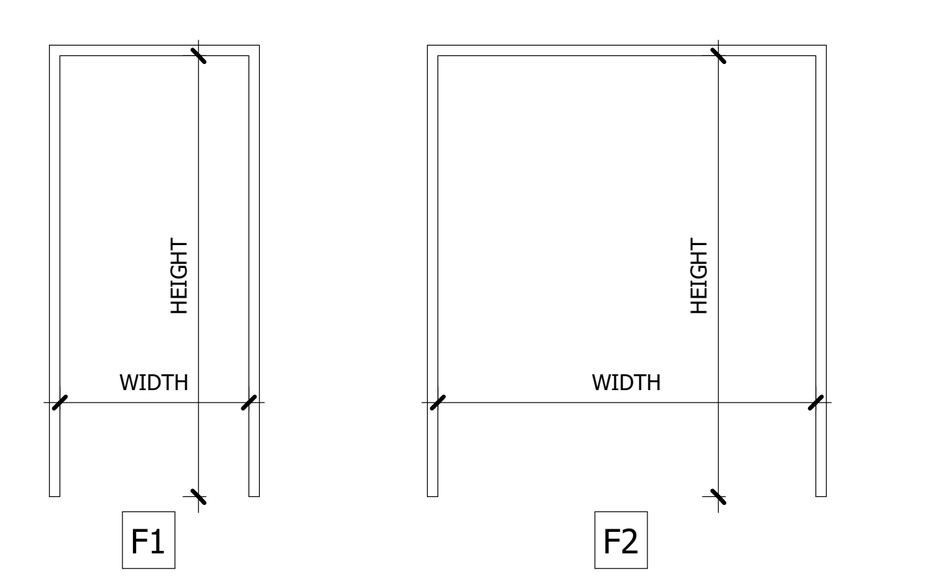


**DOOR/FRAME MATERIAL KEY:**

| | |
|---|---|
| AL | ALUMINUM |
| EM | EXTERIOR METAL |
| GL | GLASS |
| HC | HOLLOW CORE |
| HM | HOLLOW METAL |
| MTL | METAL |
| SC | SOLID CORE |
| SR | STILE & RAIL |
| VY | VINYL |
| WD | WOOD |
| MTE | MASONITE |

## WINDOW SCHEDULE

| MARK | WIDTH | HEIGHT | WINDOW TYPE | CONSTRUCTION TYPE | COMMENTS |
|---|---|---|---|---|---|
| A | 3'-0" | 6'-0" | SINGLE HUNG | VINYL | All windows to be provided with opening limiters. See specifications. |
| B | 6'-3 1/2" | 6'-0" | SINGLE HUNG | VINYL | All windows to be provided with opening limiters. See specifications. |

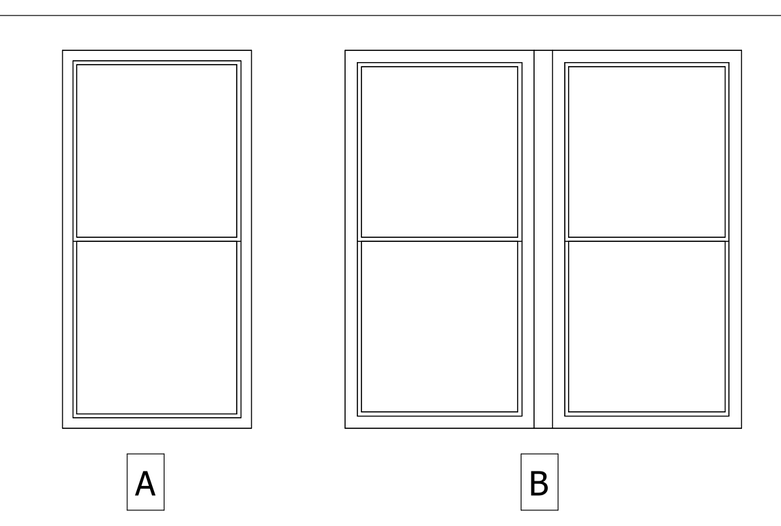


NOTE: (2) 2X6 FRT STUDS PROVIDED BETWEEN GROUP WINDOWS. (TYPICAL)
PROVIDE 4" LIMITATION FOR WINDOW LIMITERS ON ALL WINDOWS

## LIGHT FIXTURE LEGEND

| | |
|---|---|
| U1 | LITHONIA FMSATL-16-20840-BN; SEMI FLUSH MOUNT |
| U2 | LITHONIA FMFL-30840-SATL-BN; LINEAR FLUSH MOUNT |
| U3 | LITHONIA DFMADRL-14-F01; FMPANL-14-20840M6; LED SURFACE MOUNT DRUM |
| U4 | SATCO COVER PLATE |
| U5 | PROGRESS P300187-009-30; LED BATH VANITY |
| U6 | LITHONIA FMMUSL-9-14840-WH; LED CLOSET MUSHROOM |
| U7 | LITHONIA MDPC-BNP-M6; DGDT 1003 M6 |
| U8 | COOPER SMD6R-12-930-WH; 1200 LUMEN SLIM SURFACE (120 VOLT ONLY) |
| U9 | NUVO 62-1161; 7" LED FLUSH MOUNT DISCK |
| U10 | LITHONIA OLWPLED-P1-40K-120-PE-BZ; LED MINI WALL PACK |

## UNIT PLAN AND INTERIOR ELEVATION KEYNOTES

| Number | Description |
|---|---|
| 1 | WASHER |
| 2 | DRYER |
| 3 | RANGE / OVEN |
| 4 | REFRIGERATOR |
| 5 | DISHWASHER |
| 6 | KITCHEN SINK / FAUCET |
| 7 | TOILET |
| 8 | VANITY - SEE ELEVATION FOR SIZE |
| 9 | 30"X60" TUB |
| 10 | 36"X60" SHOWER BASE |
| 11 | 32"X60" SHOWER BASE |
| 12 | ACCESSIBLE THRESHOLD - MARBLE |
| 13 | ACCESSIBLE THRESHOLD - ALUMINIUM |
| 14 | SOFFIT OVER REFRIGERATOR AND BEHIND CABINET |
| 15 | LINEN SHELVES (5) PER SPECIFICATION |
| 16 | WIRE SHEVLING |
| 17 | KNEE WALL BELOW COUNTERTOP |
| 18 | BALCONY RAILING @ 42" HIGH |
| 19 | WALL MOUNTED HOT WATER HEATER |
| 20 | HVAC UNIT MOUNTED ON WALL |
| 21 | PRE ROCK BEHIND BATHING FIXTURES |
| 22 | CUBBIE CABINETS |
| 23 | MICROWAVE WITH RECIRCULATION HOOD |
| 24 | WALL TILE BETWEEN CONTERTOP AND WALL CABINET. SEE 1D DRAWING |
| 25 | BLOCKING FOR GRAB BAR. SEE FIG. 4-SHEET A0.06 |
| 26 | 24" HORIZONTAL GRAB BAR @ TUB BACK WALL. SEE FIG. 4 - SHEET A0.06 |
| 27 | SHOWER ROD |
| 28 | NOT USED |
| 29 | PAINTED FRAME MIRROR |
| 30 | TOILET TISSUE HOLDER @ 26" A.F.F. |
| 31 | 30" TOWEL BAR |
| 32 | ROBE HOOK |
| 33 | SHOWER HEAD |
| 34 | VANITY SINK BOWL |

**NOTES:**

1. SEE SPECIFICATIONS FOR ADDITIONAL INFORMATION.
2. ALL DOOR HARDWARE TO BE COMPLIANT WITH THE FEDERAL FAIR HOUSING ACT (FHA).
3. DOORS SHALL BE OPENABLE WITH NO MORE THAN ONE RELEASING OPERATION.
4. PROVIDE ACCESSIBLE THRESHOLDS AT ALL DOORS.
5. ALL UNITS ARE ADAPTABLE PER FHA. SEE SHEET A0.06 FOR ADDITIONAL INFORMATION.
6. ALL DIMENSIONS ARE TO ROUGH FRAMING U.N.O.
7. ALL WALLS ARE 2X4 STUDS UNLESS NOTED OTHERWISE.
8. ALL TENANT SEPERATIONS AND CORRIDOR WALLS ARE 2X6 UNLESS NOTED OTHERWISE.
9. PATIO AT FIRST FLOOR 4" BELOW UNIT FINISH FLOOR.
10. BALCONIES ARE FLUSH WITH GYPCRETE TOPPING. SEE DETAIL.
11. ALL TOILETS SET ON NEOPRENE GASKET WITH INSULATED PIPE TRAP.
12. ALL KITCHEN APPLIANCES TO HAVE STAINLESS STEEL FRONTS.
13. WHERE DRAWINGS ARE IN CONFLICT WITH OTHER DRAWINGS, CONTRACTOR SHALL NOTIFY THE ARCHITECT.
14. PROVIDE BLOCKING FOR GRAB BARS IN ALL BATHROOMS
15. DIMENSION TO STUD UNLESS OTHERWISE NOTED
16. DIMESNION TO FINISH @ CABINETS
17. PROVIDE BLOCKING FOR TV WALL MOUNT, CENTER AT 60" A.F.F.
18. ALL BATHROOM VANITES ARE 21" IN DEPTH

**ROOM FINISH MATERIAL CODE**

| | |
|---|---|
| CPT | CARPET |
| CT | CERAMIC TILE |
| CONC | CONCRETE |
| GWB | GYPSUM WALL BOARD |
| MR GWB | MOISTURE RESISTANT GWB |
| V | SHEET VINYL |
| VWP | VINYL WOOD PLANK |
| VCT | VINYL COMPOSITE TILE |
| WD | WOOD |

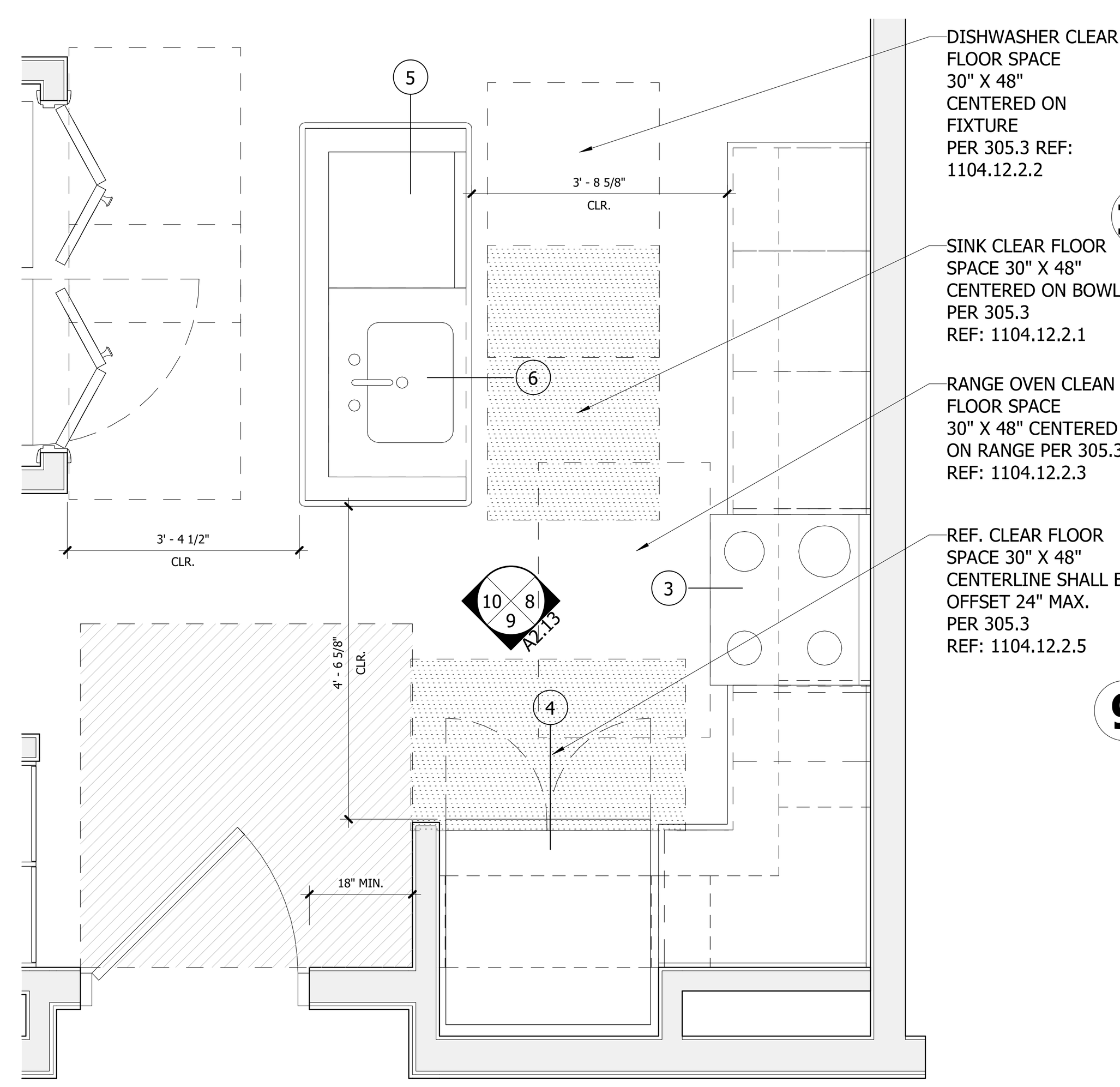


4 UNIT B-FW1 - KITCHEN - PLAN
SCALE : 1/2" = 1'-0"

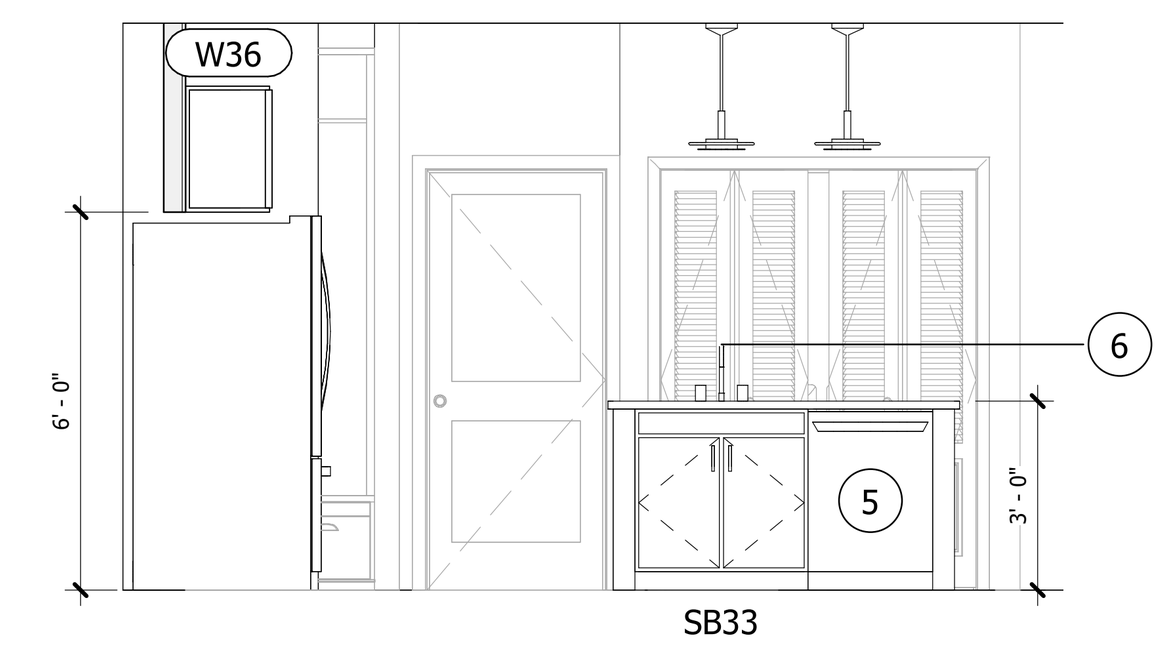


10 UNIT B-FW1 - KITCHEN - ELEV 3
SCALE : 1/4" = 1'-0"

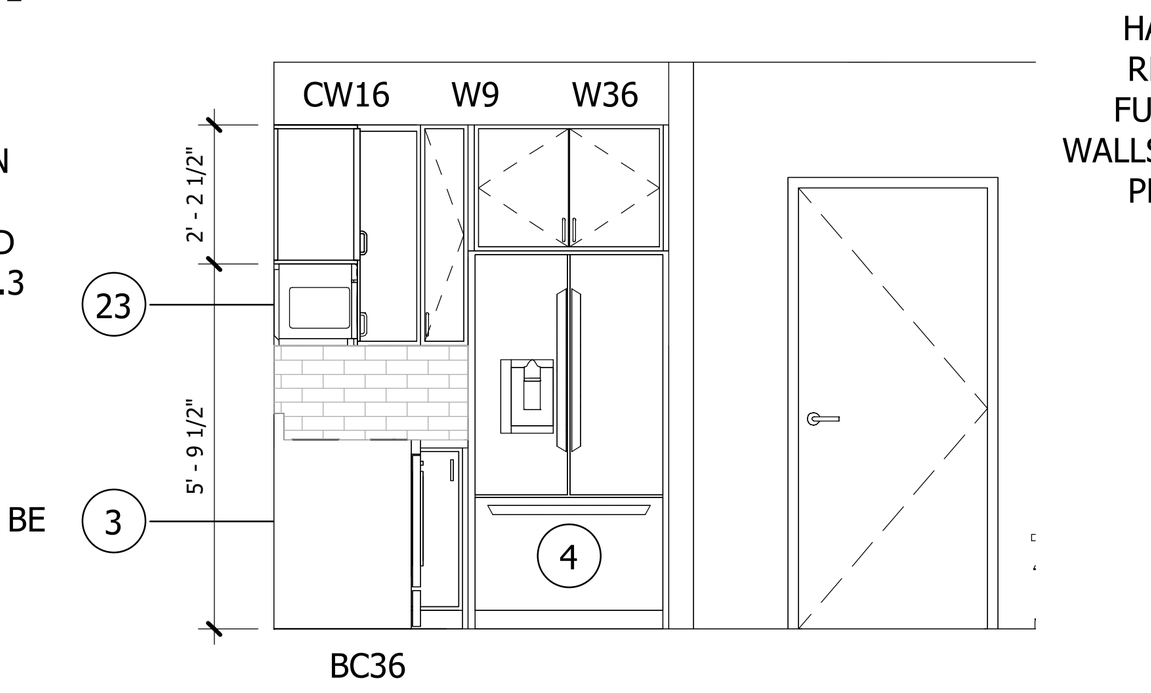


9 UNIT B-FW1 - KITCHEN - ELEV 2
SCALE : 1/4" = 1'-0"

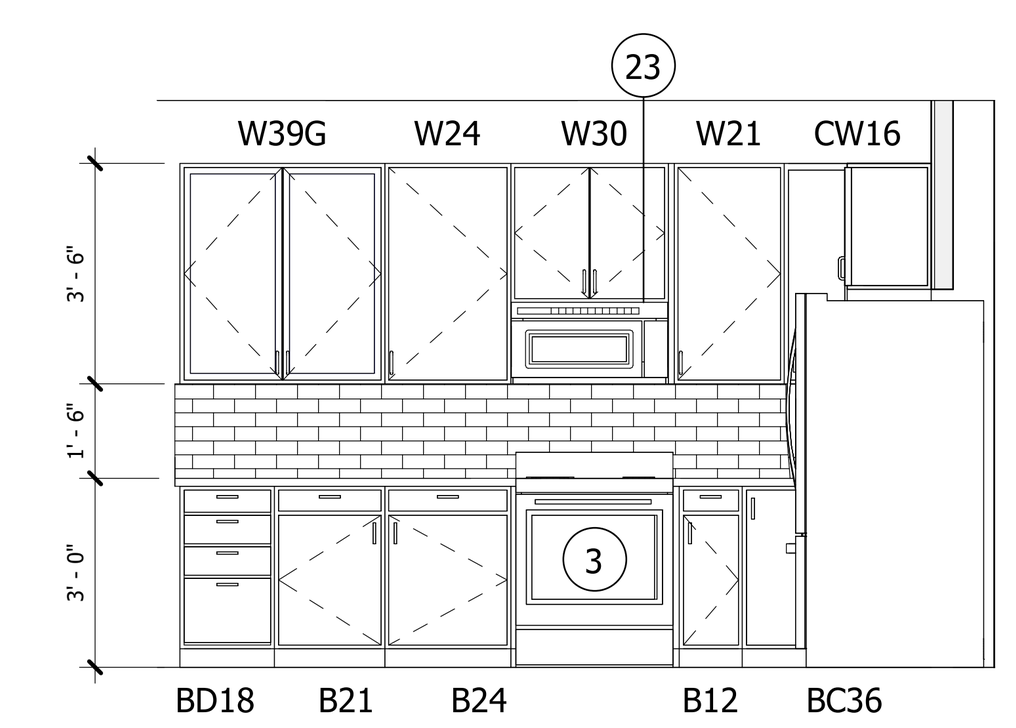


8 UNIT B-FW1 - KITCHEN - ELEV 1
SCALE : 1/4" = 1'-0"

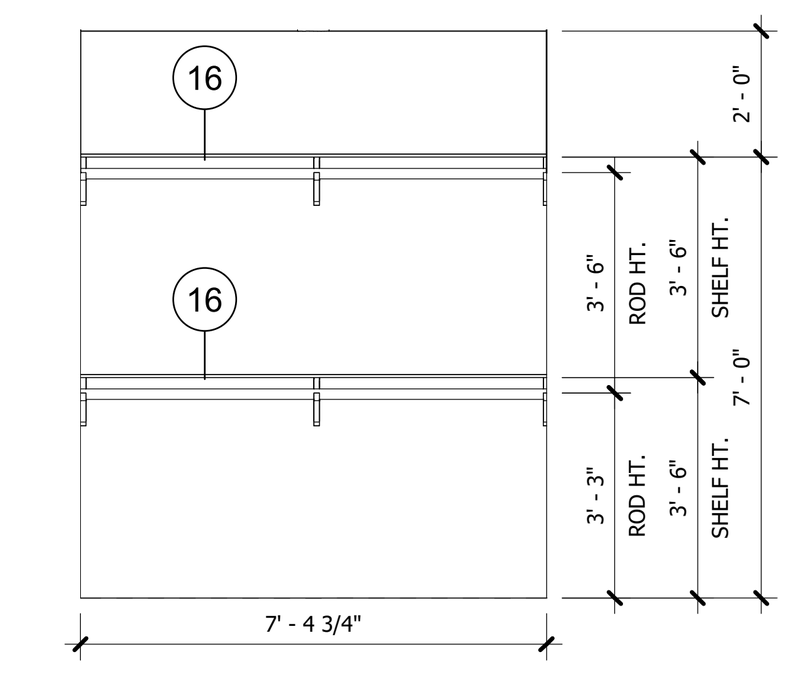


12 UNIT B(FW-1) - CLOSET 1
SCALE : 1/4" = 1'-0"

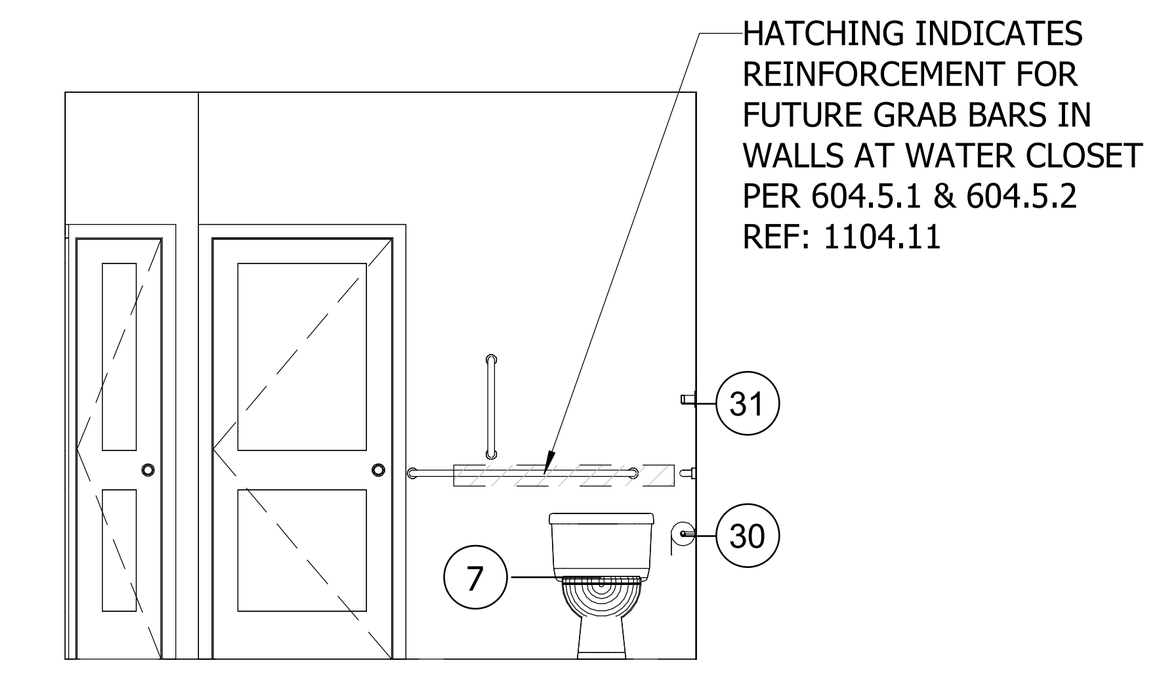


7 UNIT B-FW1 - BATHROOM - ELEV 3
SCALE : 1/4" = 1'-0"

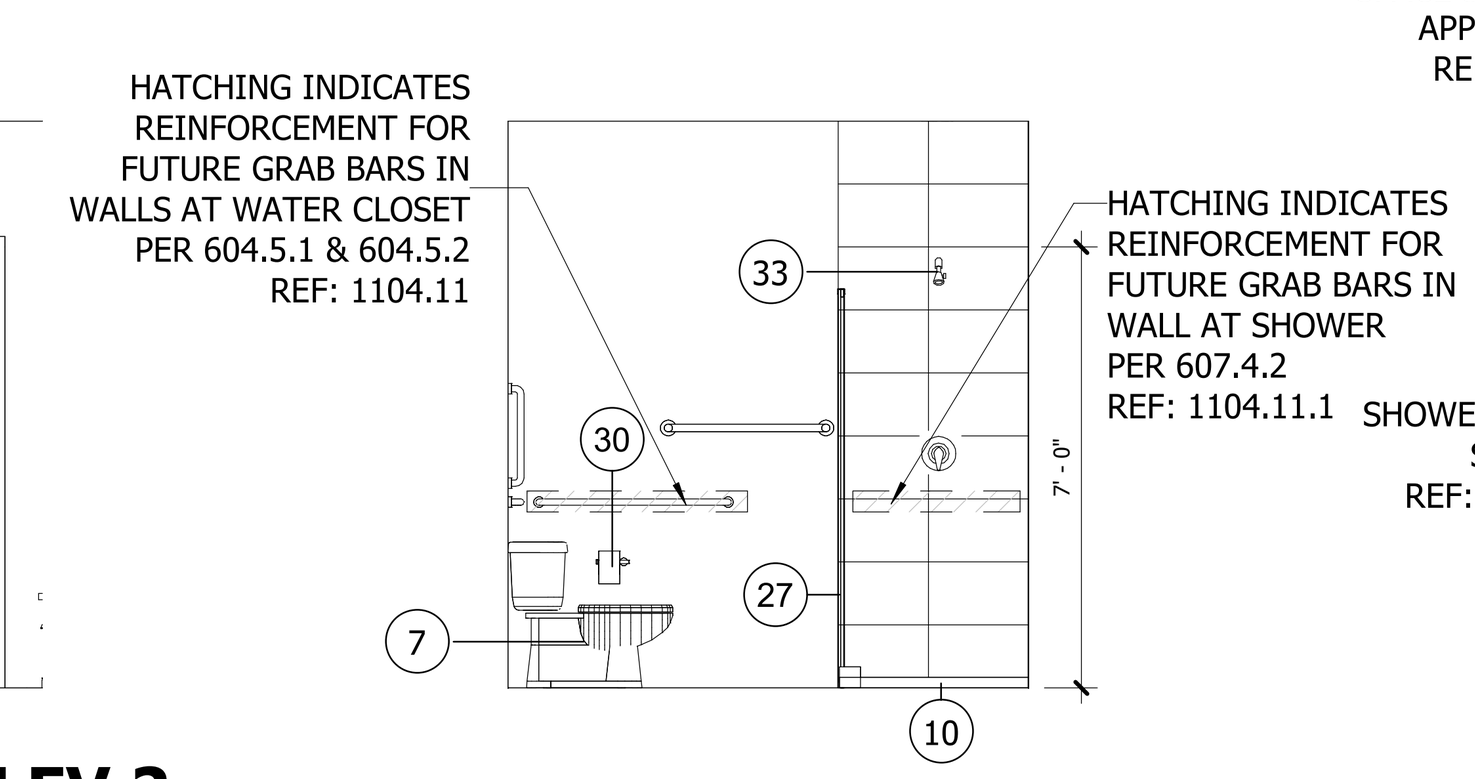


6 UNIT B-FW1 - BATHROOM - ELEV 2
SCALE : 1/4" = 1'-0"

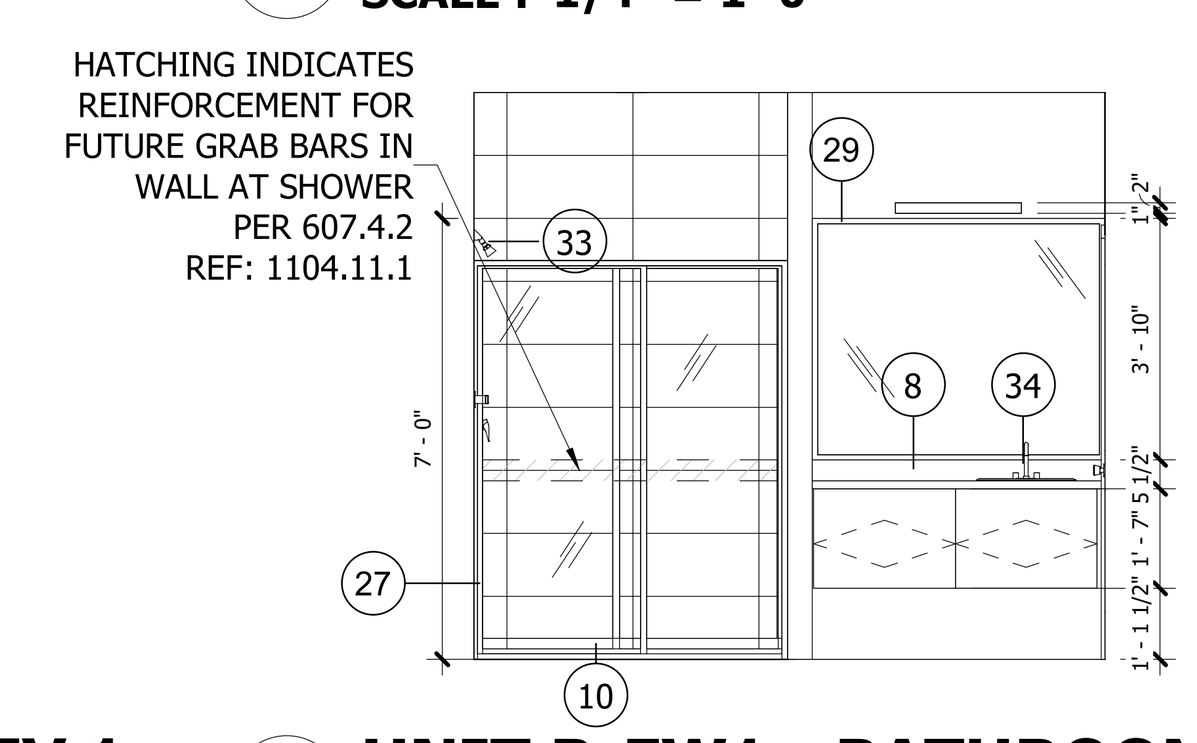


5 UNIT B-FW1 - BATHROOM - ELEV 1
SCALE : 1/4" = 1'-0"

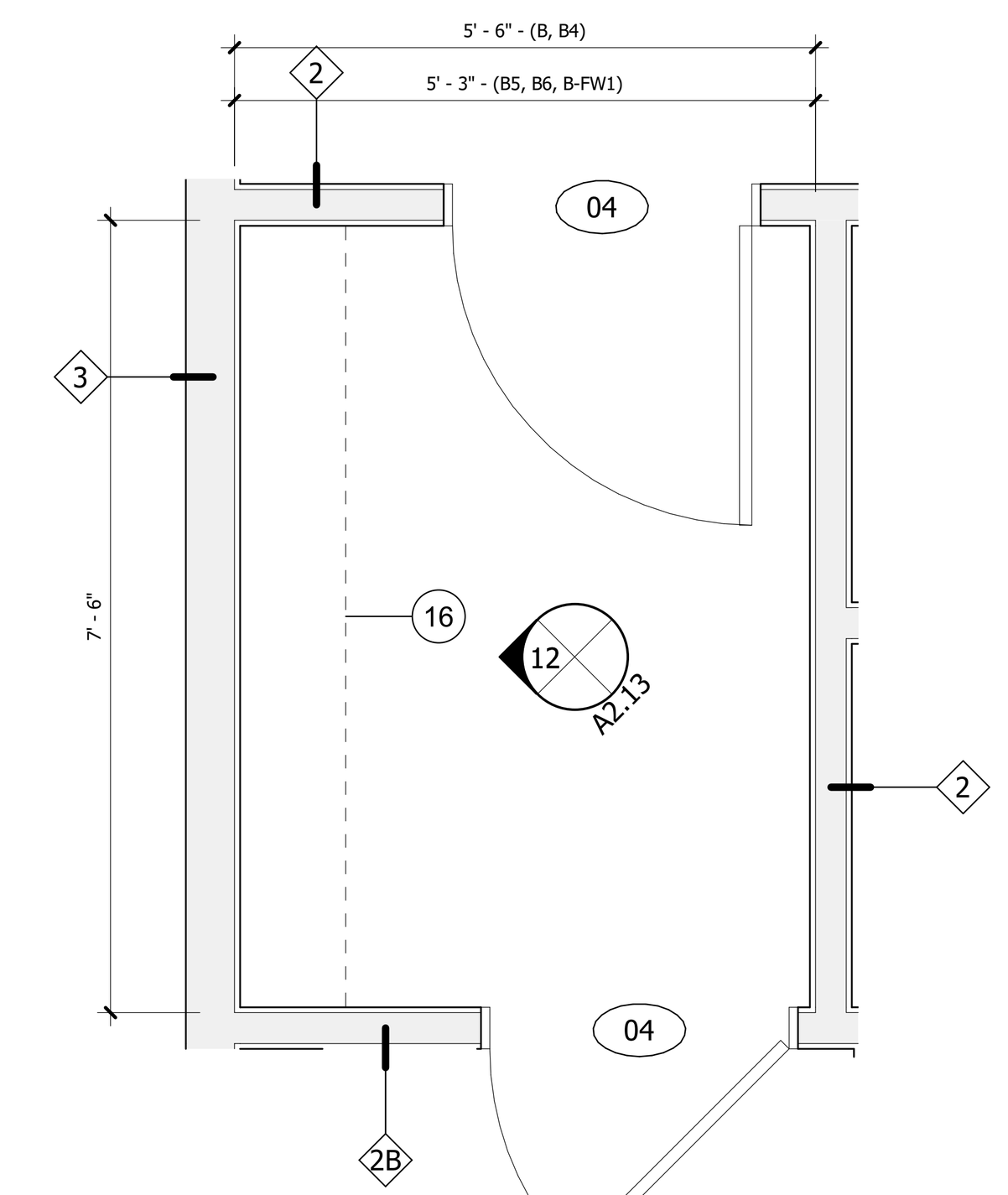


11 UNIT B(FW-1) CLOSET 1 - PLAN
SCALE : 1/2" = 1'-0"

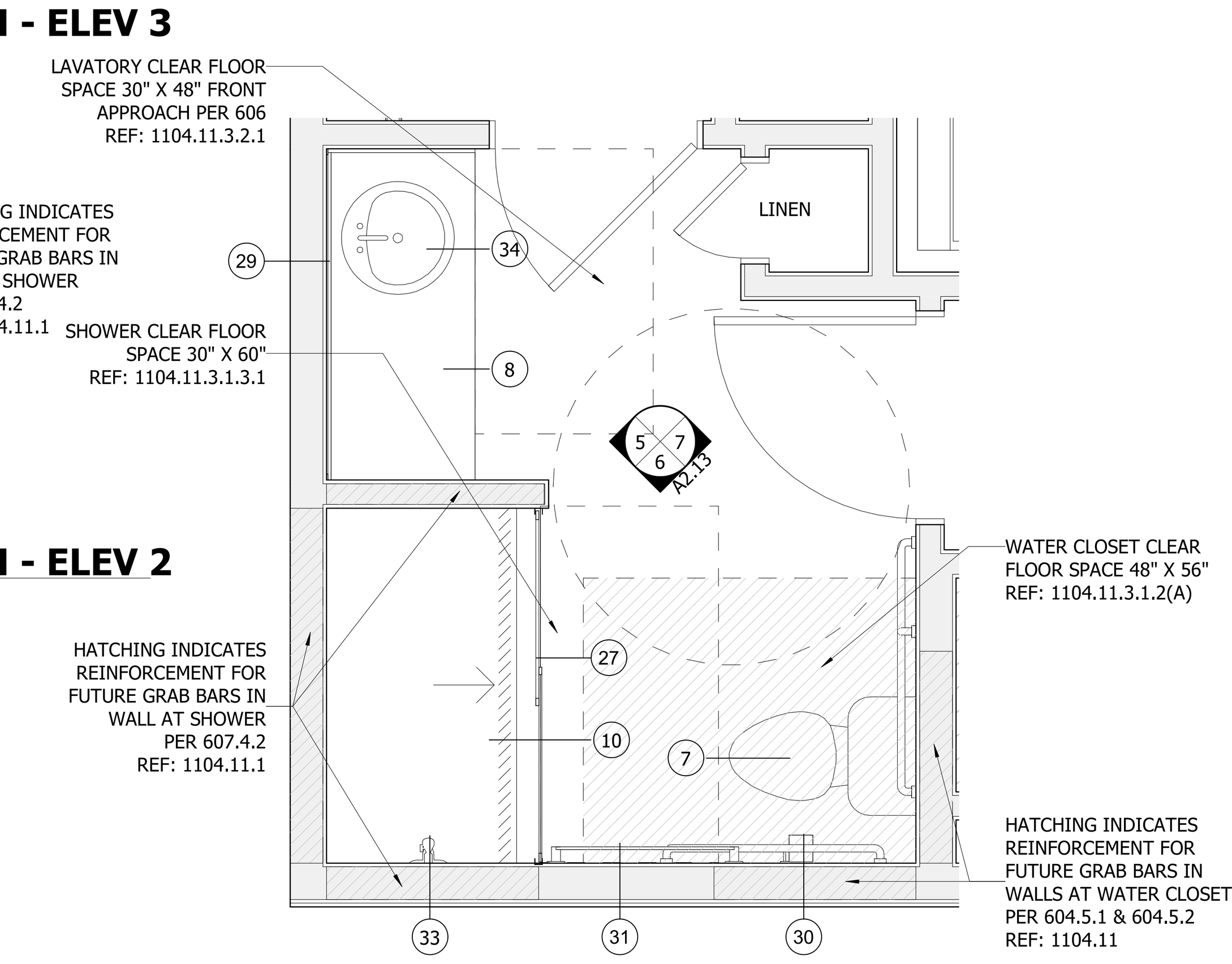


3 UNIT B-FW1 - BATHROOM 1 - PLAN
SCALE : 1/2" = 1'-0"

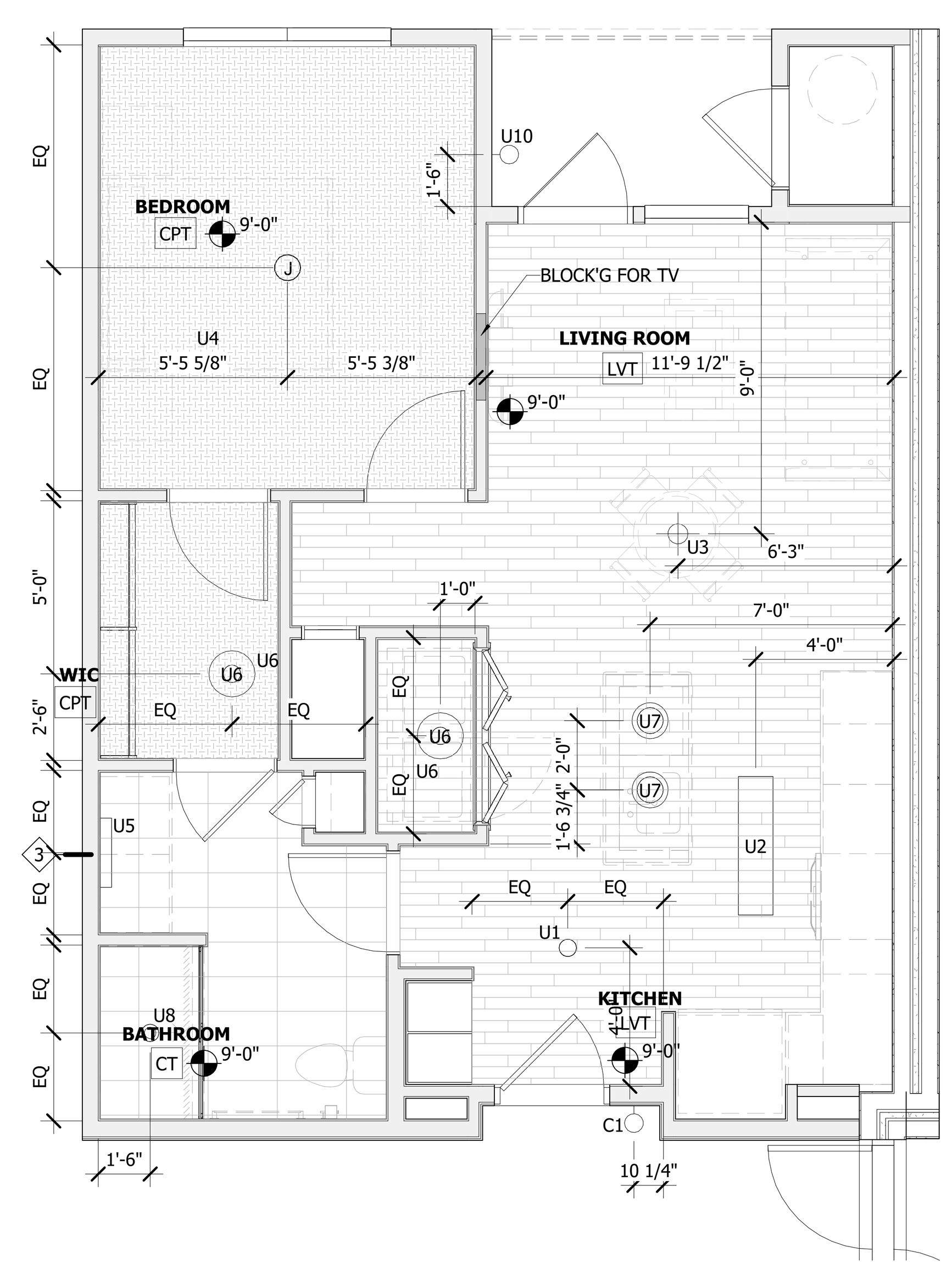


2 UNIT B(FW-1) RCP
SCALE : 1/4" = 1'-0"

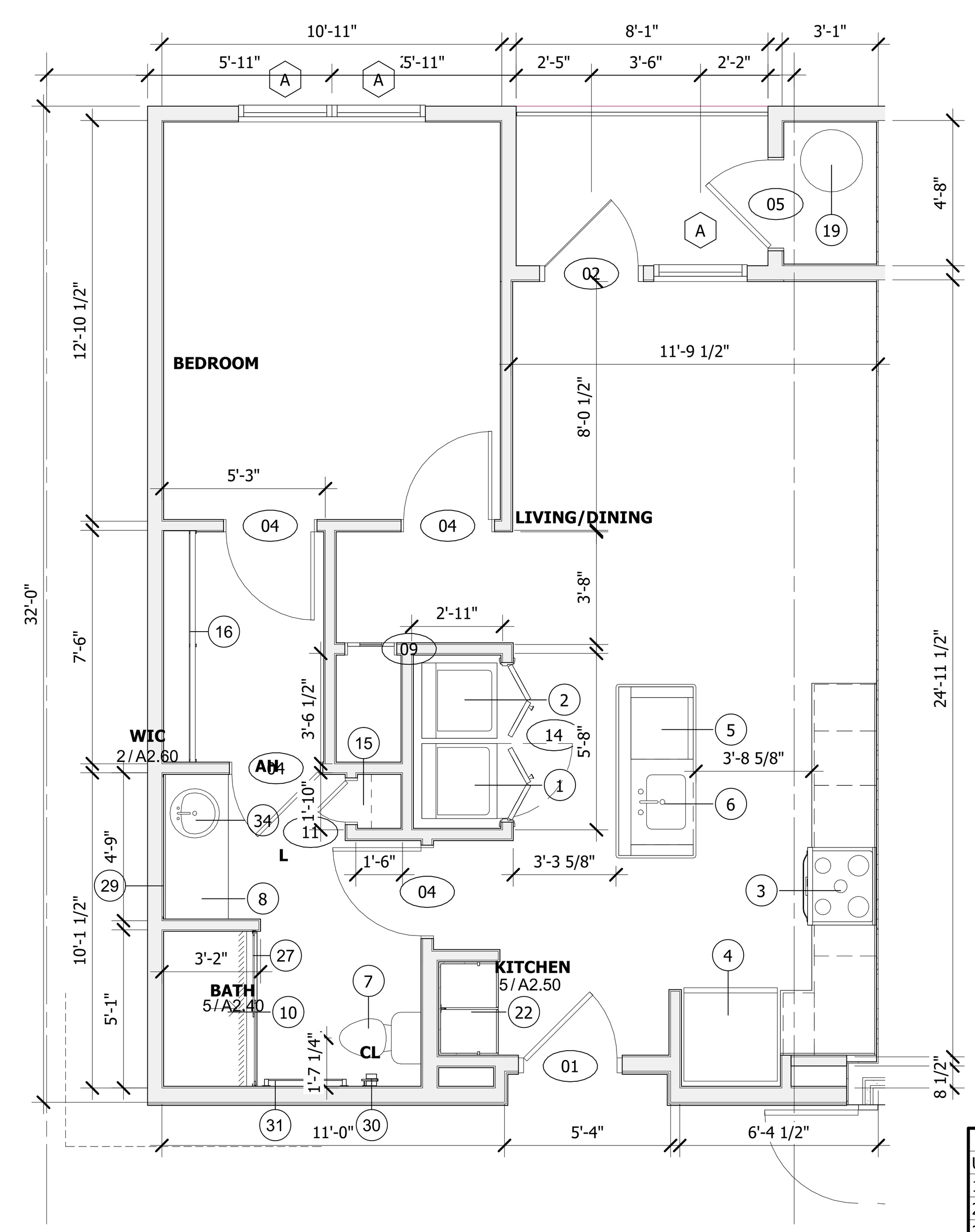


| ROOM # |
|---|
| UNIT B FW1 |
| 150 |
| 250 |
| 350 |
| 450 |
| Grand total: 4 |

1 UNIT - B (FW-1) - PLAN
SCALE : 1/4" = 1'-0"

ALL REPORTS, PLANS, SPECIFICATIONS AND COMPUTER FILES RELATING TO THIS PROJECT ARE THE PROPERTY OF THE MARTIN ARCHITECTURAL GROUP. THE MARTIN ARCHITECTURAL GROUP RETAINS ALL COMMON LAW, STATUTE AND OTHER RESERVED RIGHTS INCLUDING THE COPYRIGHT THERETO. REPRODUCTION OF THE MATERIAL HEREIN OR SUBSTANTIAL USE WITHOUT WRITTEN PERMISSION OF THE MARTIN ARCHITECTURAL GROUP VIOLATES THE COPYRIGHT LAWS OF THE UNITED STATES AND WILL BE SUBJECT TO LEGAL PROSECUTION.
©2022, The Martin Architectural Group, P.C.



THE MARTIN ARCHITECTURAL GROUP, P.C.
ARCHITECTS AND LAND PLANNERS
A PROFESSIONAL CORPORATION
240 NORTH 22ND STREET, PHILADELPHIA, PA, 19103
P (215) 665-1080 F (215) 561-5064

| | |
|---|---|
| P.A.: | DREW ROMANIC |
| P.M.: | JASON DECAMPLI |
| DRAWN BY: | Author |
| PROJECT NO: | 1362-12 |

| DATE |
|---|
| 12/20/22 |

| NO. | REVISION |
|---|---|
| 1 | PERMIT SET |

UNIT PLANS (UNIT B-FW1)
**Granite Run Apartment 02**
MIDDLETOWN TOWNSHIP, PA

| | |
|---|---|
| SCALE: | |
| DATE: | 11/15/22 |

# A2.13

©2022, The Martin Architectural Group, P.C.

| DOOR SCHEDULE - DWELLING UNIT | | | | | | | | |
|---|---|---|---|---|---|---|---|---|
| MARK | DOOR TYPE | WIDTH | HEIGHT | DOOR MATERIAL | FRAME TYPE | FRAME MATERIAL | FIRE RATING | REMARKS |
| 01 | UA | 3'-0" | 7'-0" | MTL | F1 | MTL | 20 min. | UNIT ENTRY - SPRING HINGES |
| 02 | UE | 3'-0" | 7'-0" | VY | F1 | VY | | BALCONY DOOR |
| 03 | UB | 3'-0" | 6'-8" | MTE | F1 | WD | | |
| 04 | UB | 2'-10" | 6'-8" | MTE | F1 | WD | | |
| 05 | UA | 2'-10" | 6'-8" | EM | F1 | MTL | | UNIT EXT. MECH DOOR |
| 06 | UB | 2'-6" | 6'-8" | MTE | F1 | WD | | |
| 07 | UB | 2'-0" | 6'-8" | MTE | F1 | WD | | |
| 08 | UC | 2'-0" | 6'-8" | MTE | F1 | WD | | LOUVERED AIR HANDLER |
| 09 | UC | 1'-6" | 6'-8" | MTE | F1 | WD | | LOUVERED AIR HANDLER |
| 10 | UB | 1'-6" | 6'-8" | MTE | F1 | WD | | |
| 11 | UB | 1'-4" | 6'-8" | MTE | F1 | WD | | |
| 12 | UDD | 4'-0" | 6'-8" | MTE | | WD | | SLIDING BARN DOOR |
| 13 | UBB | 5'-0" | 6'-8" | MTE | F2 | WD | | DOUBLE SWING DOOR |
| 14 | UCC | 5'-0" | 6'-8" | MTE | F2 | WD | | LOUVERED BI-FOLD |
| 15 | UCC | 6'-0" | 6'-8" | MTE | F2 | WD | | LOUVERED BI-FOLD |
| 19 | UB | 1'-9" | 6'-8" | MTE | F1 | WD | | |
| E | | 3'-0" | 7'-0" | | | | | |
| EE | | 6'-0" | 7'-0" | | | | | |
| F | | 6'-0" | 7'-0" | | | | | *RATED GLASS |

## ROOM FINISH SCHEDULE

| SPACE | FLOOR | WALL | CEILING | HEIGHT | REMARKS |
|---|---|---|---|---|---|
| KITCHEN | 3 | A | 1 | 9'-0" | |
| LIVING RM. | 3 | A | 1 | 9'-0" | |
| BEDROOMS | 1 | A | 1 | 9'-0" | |
| DEN | 3 | A | 1 | 9'-0" | |
| BATHS | 4 | B/C | 2 | 9'-0" | |
| CLOSETS | / | A | 1 | 9'-0" | FLOORING: MATCH ADJ. |
| LAUNDRY | 3 | A | 2 | 9'-0" | FLOORING: MATCH ADJ. |
| UNIT-HVAC | / | A | 1 | 9'-0" | FL.: GYPCRETE PAINT-LIGHT GRAY |

### MATERIAL CODE

| FLR. / BASE | | WALL | | CEILING | |
|---|---|---|---|---|---|
| 1 | CPT / WD | A | G.W.B. | 1 | G.W.B. |
| 2 | | B | MR.G.W.B. | 2 | MR.G.W.B. |
| 3 | LVT / WD | C | CT-2 | 3 | |
| 4 | CT / CT | D | | 4 | |
| 5 | | E | | 5 | |
| 6 | | F | | 6 | |
| 7 | | G | | 7 | |
| 8 | | H | | 8 | |

MATERIAL GLOSSARY

| | |
|---|---|
| CPT | CARPET - SHAW GULF WINDS - COLOR: 532 MINERAL |
| CT-1 | CERAMIC TILE - 12X24 FLORIM MATERIA - COLOR: HONED 02 |
| CT-2 | CERAMIC TILE - 12X24 FLORIM MATERIA - COLOR: STONE CALACATTA |
| G.W.B. | GYPSUM WALL BOARD |
| MR.G.W.B. | MOISTURE RESISTANT G.W.B. |
| LVT | VINYL WOOD PLANK - SHAW TERRAIN 12 MIL - COLOR: 766 ECHO |
| WD. | WOOD |

## UNIT DOOR TYPES

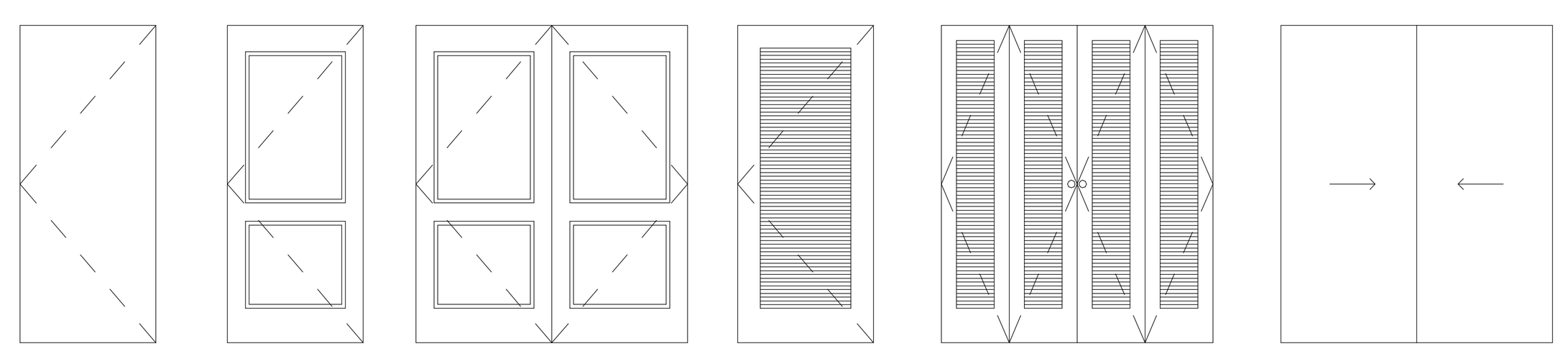
UA (HINGE) UB (HINGE) UBB (HINGE) UC UCC (BI-FOLD) UDD (SLIDING) UE (GLASS)

## FRAME TYPES

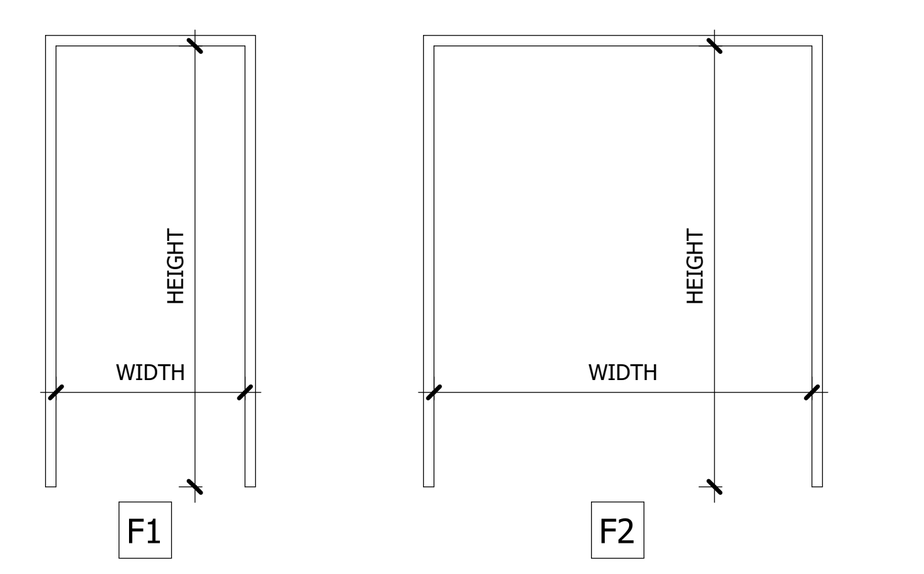


**DOOR/FRAME MATERIAL KEY:**

| | |
|---|---|
| AL | ALUMINUM |
| EM | EXTERIOR METAL |
| GL | GLASS |
| HC | HOLLOW CORE |
| HM | HOLLOW METAL |
| MTL | METAL |
| SC | SOLID CORE |
| SR | STILE & RAIL |
| VY | VINYL |
| WD | WOOD |
| MTE | MASONITE |

| WINDOW SCHEDULE | | | | | |
|---|---|---|---|---|---|
| MARK | WIDTH | HEIGHT | WINDOW TYPE | CONSTRUCTION TYPE | COMMENTS |
| A | 3'-0" | 6'-0" | SINGLE HUNG | VINYL | All windows to be provided with opening limiters. See specifications. |
| B | 6'-3 1/2" | 6'-0" | SINGLE HUNG | VINYL | All windows to be provided with opening limiters. See specifications. |

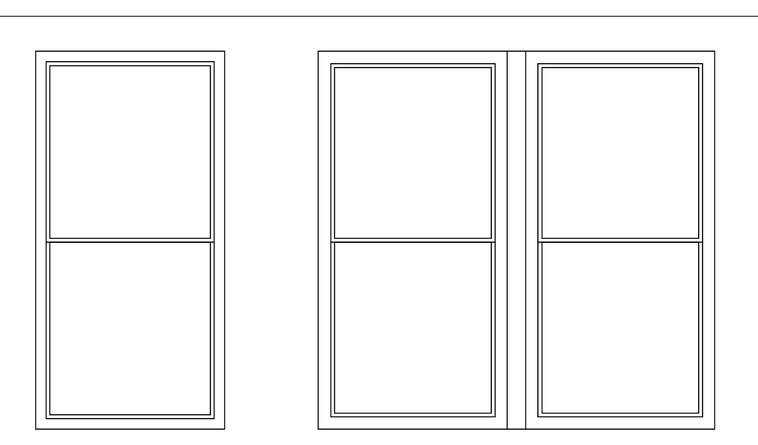


NOTE: (2) 2X6 FRT STUDS PROVIDED BETWEEN GROUP WINDOWS. (TYPICAL) PROVIDE 4" LIMITATION FOR WINDOW LIMITERS ON ALL WINDOWS

## LIGHT FIXTURE LEGEND

| | |
|---|---|
| U1 | LITHONIA FMSATL-16-20840-BN; SEMI FLUSH MOUNT |
| U2 | LITHONIA FMFL-30840-SATL-BN; LINEAR FLUSH MOUNT |
| U3 | LITHONIA DFMADRL-14-F01; FMPANL-14-20840M6; LED SURFACE MOUNT DRUM |
| U4 | SATCO COVER PLATE |
| U5 | PROGRESS P300187-009-30; LED BATH VANITY |
| U6 | LITHONIA FMMUSL-9-14840-WH; LED CLOSET MUSHROOM |
| U7 | LITHONIA MDPC-BNP-M6; DGDT 1003 M6 |
| U8 | COOPER SMD6R-12-930-WH; 1200 LUMEN SLIM SURFACE (120 VOLT ONLY) |
| U9 | NUVO 62-1161; 7" LED FLUSH MOUNT DISCK |
| U10 | LITHONIA OLWPLED-P1-40K-120-PE-BZ; LED MINI WALL PACK |

## UNIT PLAN AND INTERIOR ELEVATION KEYNOTES

| Number | Description |
|---|---|
| 1 | WASHER |
| 2 | DRYER |
| 3 | RANGE / OVEN |
| 4 | REFRIGERATOR |
| 5 | DISHWASHER |
| 6 | KITCHEN SINK / FAUCET |
| 7 | TOILET |
| 8 | VANITY - SEE ELEVATION FOR SIZE |
| 9 | 30"X60" TUB |
| 10 | 36"X60" SHOWER BASE |
| 11 | 32"X60" SHOWER BASE |
| 12 | ACCESSIBLE THRESHOLD - MARBLE |
| 13 | ACCESSIBLE THRESHOLD - ALUMINIUM |
| 14 | SOFFIT OVER REFRIGERATOR AND BEHIND CABINET |
| 15 | LINEN SHELVES (5) PER SPECIFICATION |
| 16 | WIRE SHEVLING |
| 17 | KNEE WALL BELOW COUNTERTOP |
| 18 | BALCONY RAILING @ 42" HIGH |
| 19 | WALL MOUNTED HOT WATER HEATER |
| 20 | HVAC UNIT MOUNTED ON WALL |
| 21 | PRE ROCK BEHIND BATHING FIXTURES |
| 22 | CUBBIE CABINETS |
| 23 | MICROWAVE WITH RECIRCULATION HOOD |
| 24 | WALL TILE BETWEEN CONTERTOP AND WALL CABINET. SEE 1D DRAWING |
| 25 | BLOCKING FOR GRAB BAR. SEE FIG. 4- SHEET A0.06 |
| 26 | 24" HORIZONTAL GRAB BAR @ TUB BACK WALL. SEE FIG. 4 - SHEET A0.06 |
| 27 | SHOWER ROD |
| 28 | NOT USED |
| 29 | PAINTED FRAME MIRROR |
| 30 | TOILET TISSUE HOLDER @ 26" A.F.F. |
| 31 | 30" TOWEL BAR |
| 32 | ROBE HOOK |
| 33 | SHOWER HEAD |
| 34 | VANITY SINK BOWL |

**NOTES:**

1. SEE SPECIFICATIONS FOR ADDITIONAL INFORMATION.
2. ALL DOOR HARDWARE TO BE COMPLIANT WITH THE FEDERAL FAIR HOUSING ACT (FHA).
3. DOORS SHALL BE OPENABLE WITH NO MORE THAN ONE RELEASING OPERATION.
4. PROVIDE ACCESSIBLE THRESHOLDS AT ALL DOORS.
5. ALL UNITS ARE ADAPTABLE PER FHA. SEE SHEET A0.06 FOR ADDITIONAL INFORMATION.
6. ALL DIMENSIONS ARE TO ROUGH FRAMING U.N.O.
7. ALL WALLS ARE 2X4 STUDS UNLESS NOTED OTHERWISE.
8. ALL TENANT SEPERATIONS AND CORRIDOR WALLS ARE 2X6 UNLESS NOTED OTHERWISE.
9. PATIO AT FIRST FLOOR 4" BELOW UNIT FINISH FLOOR.
10. BALCONIES ARE FLUSH WITH GYPCRETE TOPPING. SEE DETAIL.
11. ALL TOILETS SET ON NEOPRENE GASKET WITH INSULATED PIPE TRAP.
12. ALL KITCHEN APPLIANCES TO HAVE STAINLESS STEEL FRONTS.
13. WHERE DRAWINGS ARE IN CONFLICT WITH OTHER DRAWINGS, CONTRACTOR SHALL NOTIFY THE ARCHITECT.
14. PROVIDE BLOCKING FOR GRAB BARS IN ALL BATHROOMS
15. DIMENSION TO STUD UNLESS OTHERWISE NOTED
16. DIMESNION TO FINISH @ CABINETS
17. PROVIDE BLOCKING FOR TV WALL MOUNT, CENTER AT 60" A.F.F.
18. ALL BATHROOM VANITES ARE 21" IN DEPTH

| ROOM FINISH MATERIAL CODE | |
|---|---|
| CPT | CARPET |
| CT | CERAMIC TILE |
| CONC | CONCRETE |
| GWB | GYPSUM WALL BOARD |
| MR GWB | MOISTURE RESISTANT GWB |
| V | SHEET VINYL |
| VWP | VINYL WOOD PLANK |
| VCT | VINYL COMPOSITE TILE |
| WD | WOOD |

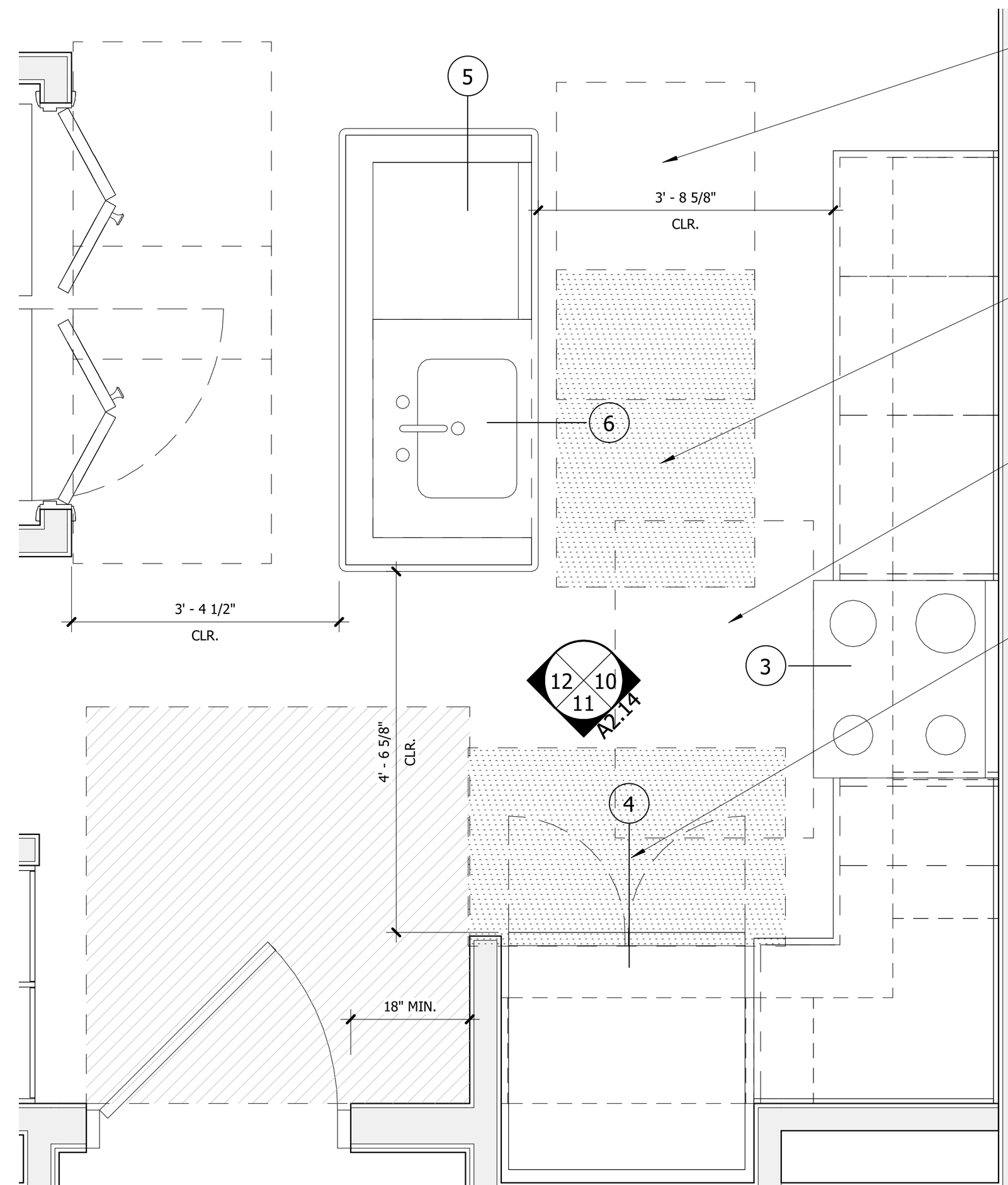


3 UNIT B2 -KITCHEN - PLAN
SCALE : 1/2" = 1'-0"

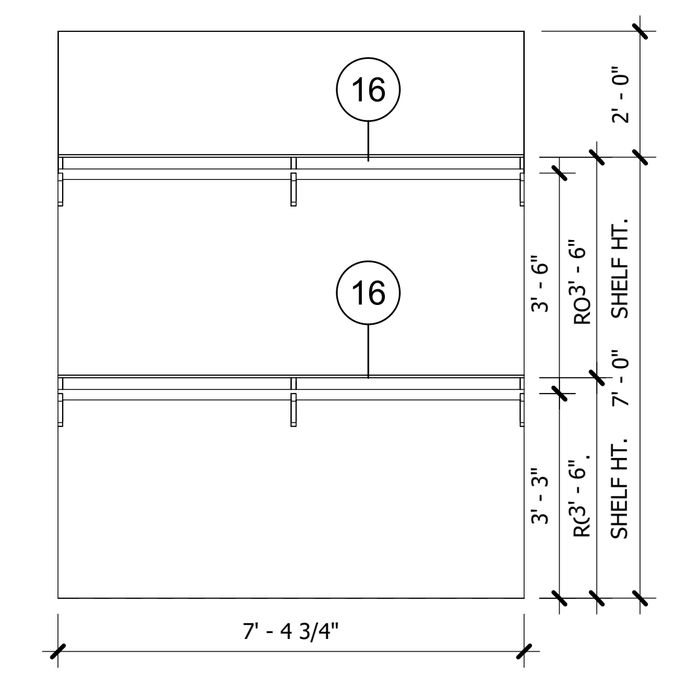

5 UNIT B2 - CLOSET 1
SCALE : 1/4" = 1'-0"

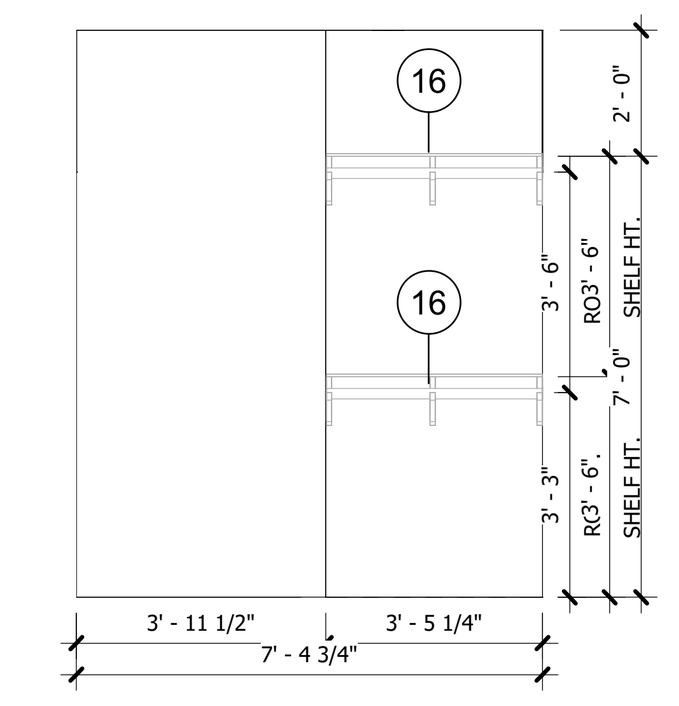

6 UNIT B2 - CLOSET 2
SCALE : 1/4" = 1'-0"

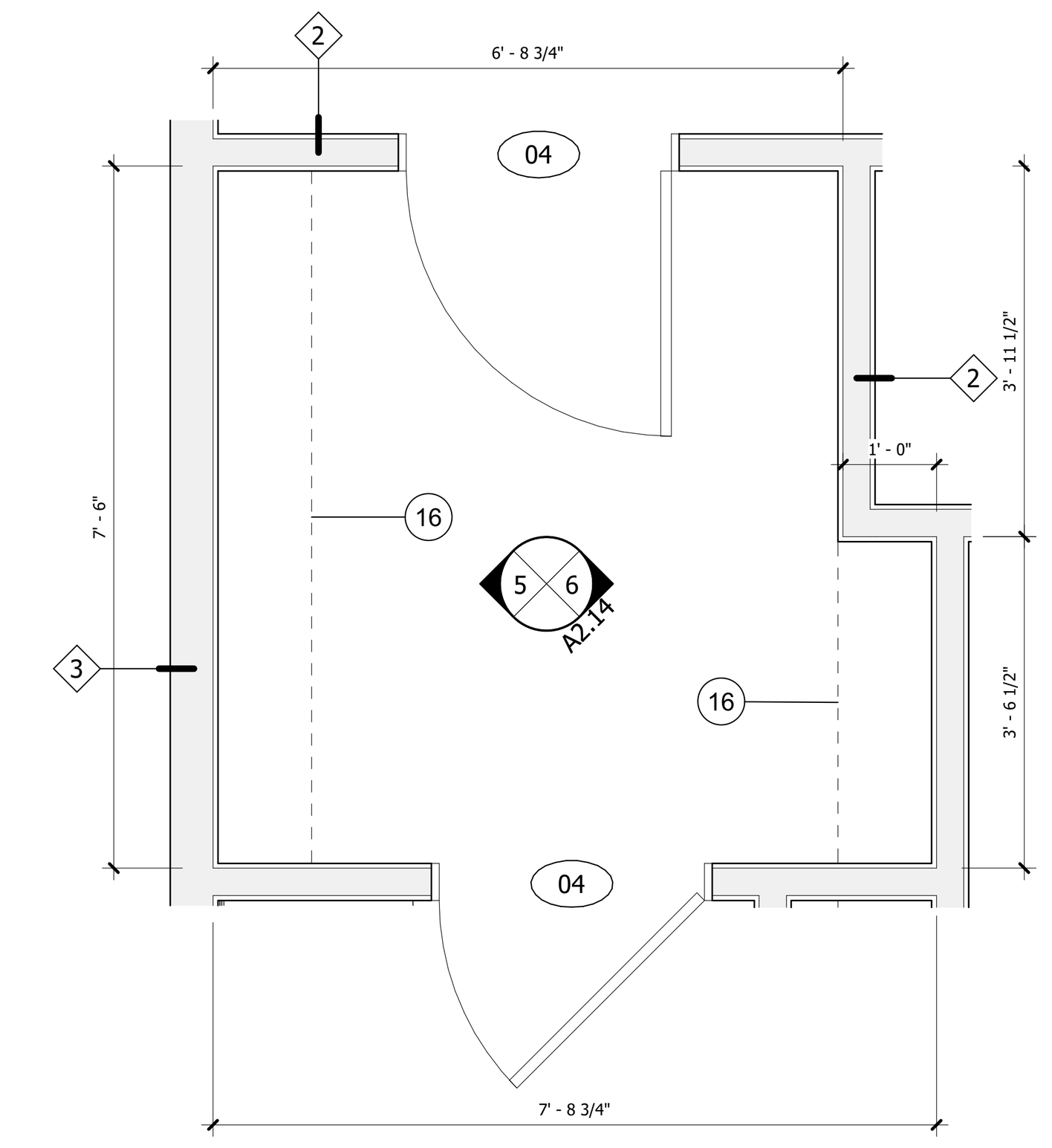

4 UNIT B2 - CLOSET 1 - PLAN
SCALE : 1/2" = 1'-0"

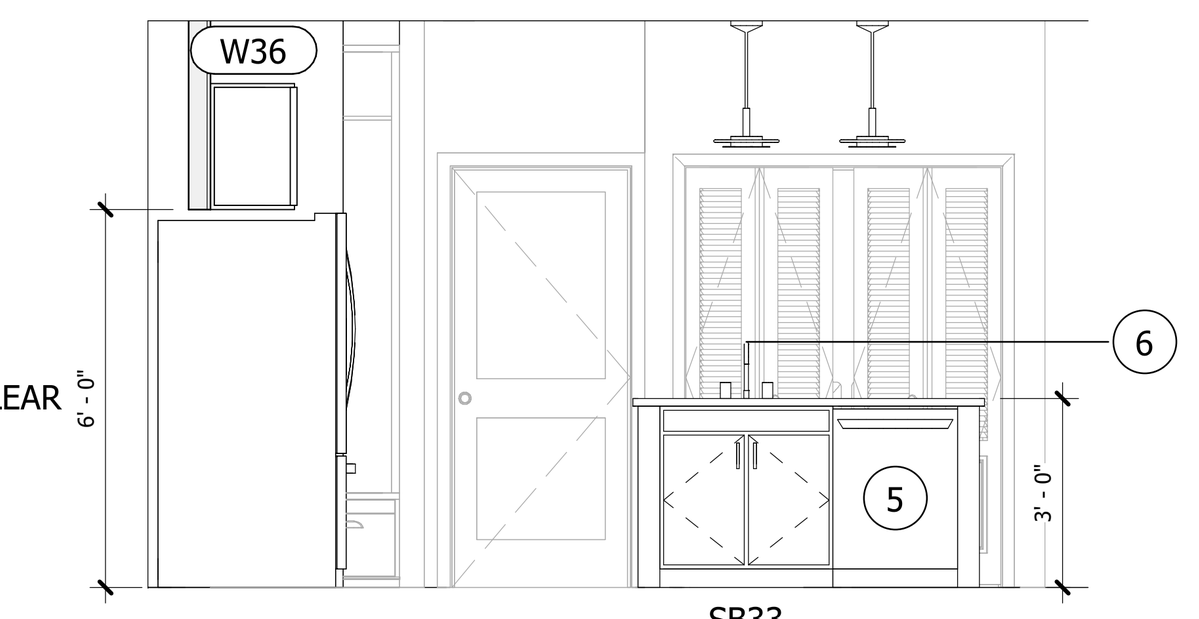


12 UNIT B2- KITCHEN - ELEV 3
SCALE : 1/4" = 1'-0"

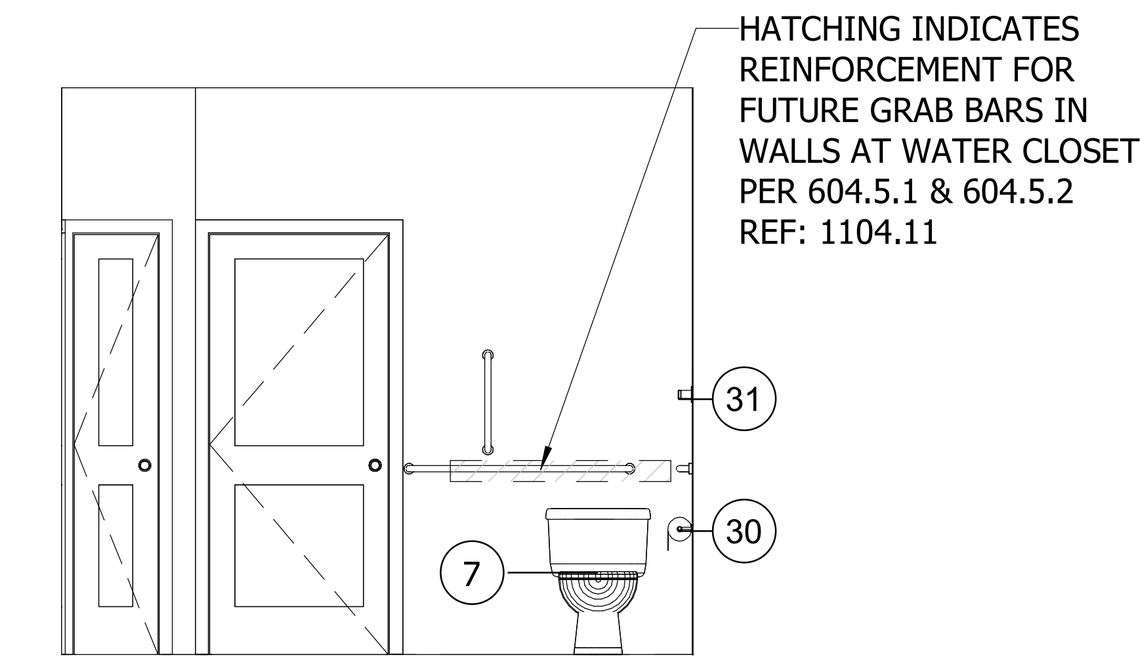


9 UNIT B2 - BATHROOM - ELEV 3
SCALE : 1/4" = 1'-0"

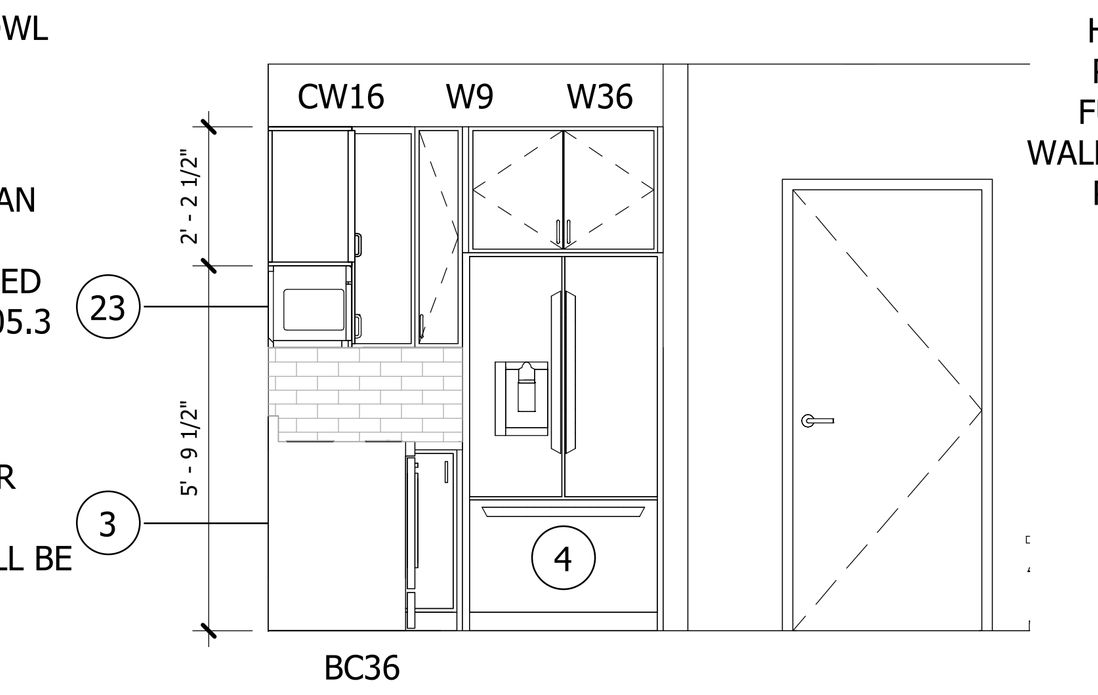


11 UNIT B2- KITCHEN - ELEV 2
SCALE : 1/4" = 1'-0"

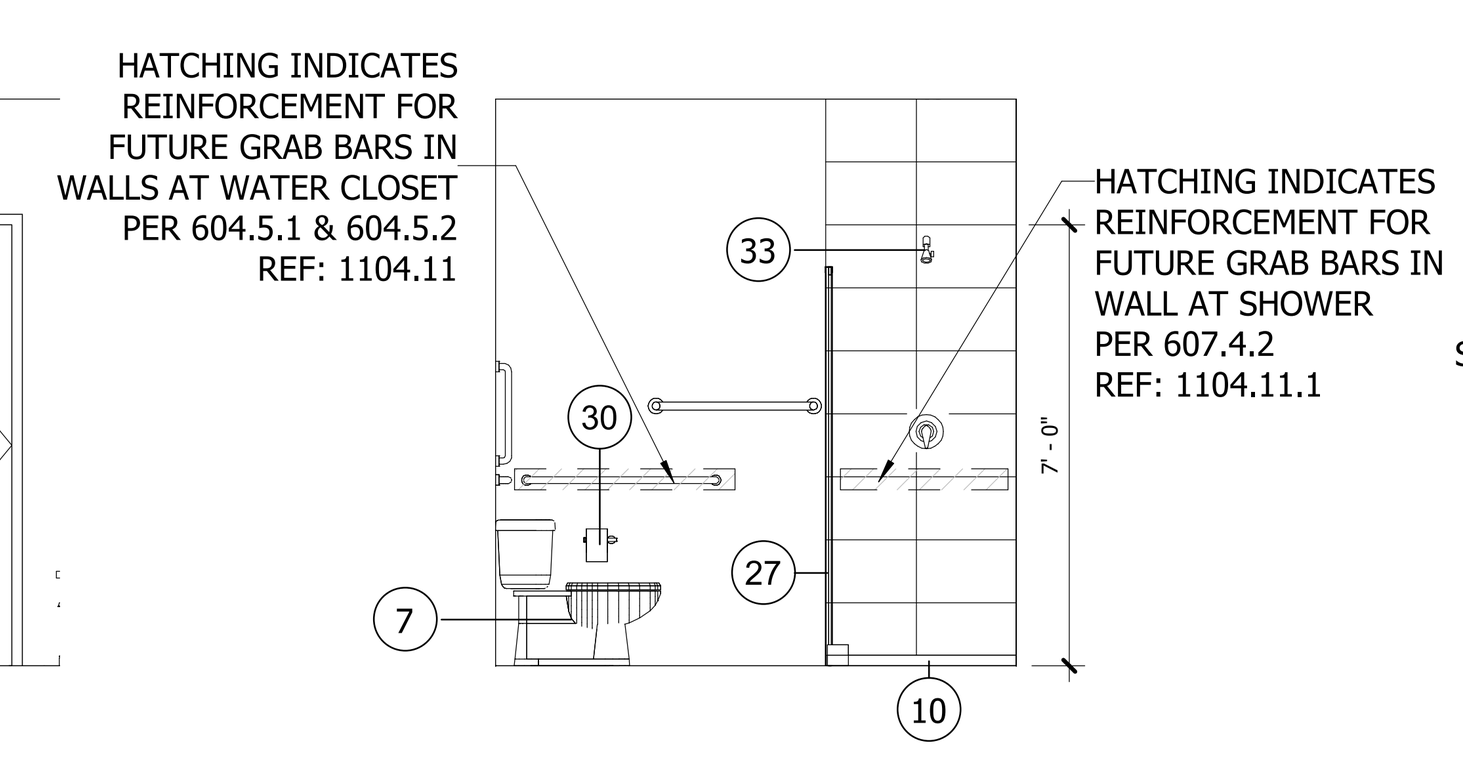


8 UNIT B2 - BATHROOM - ELEV 2
SCALE : 1/4" = 1'-0"

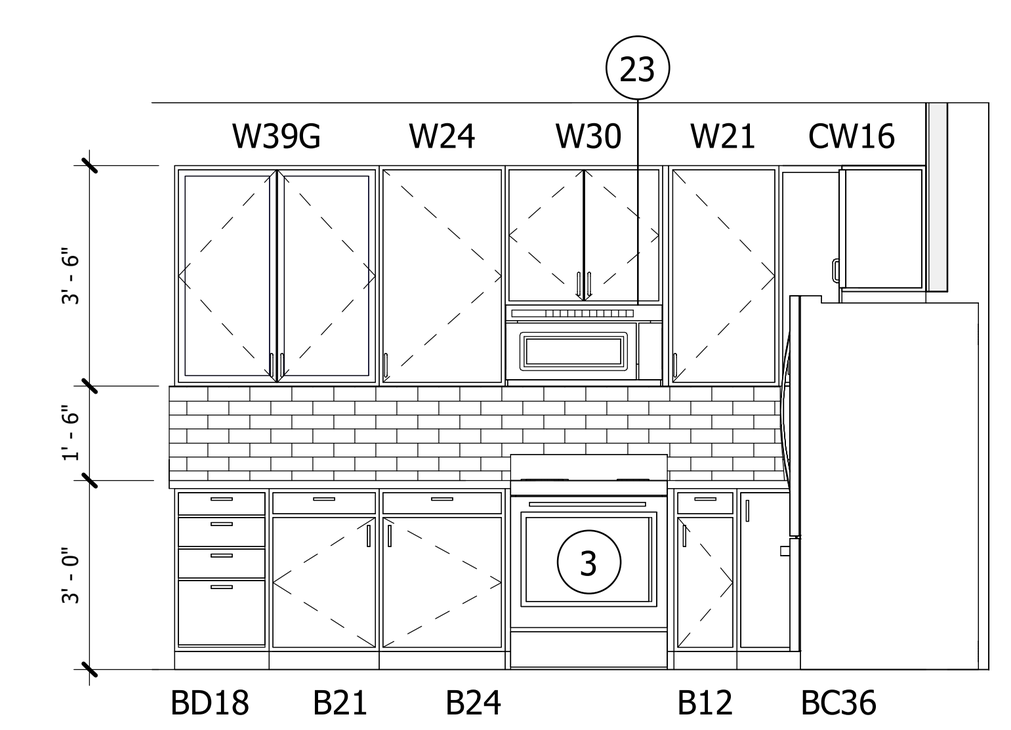


10 UNIT B2- KITCHEN - ELEV 1
SCALE : 1/4" = 1'-0"

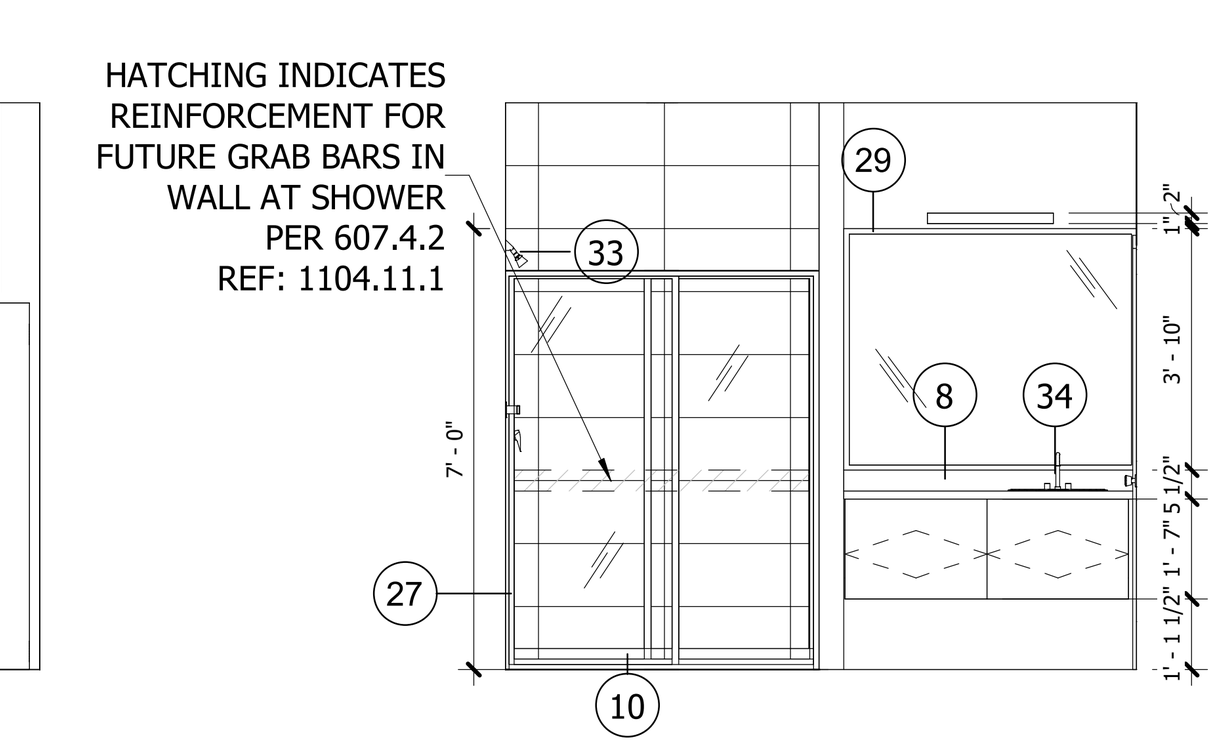


7 UNIT B2 - BATHROOM - ELEV 1
SCALE : 1/4" = 1'-0"

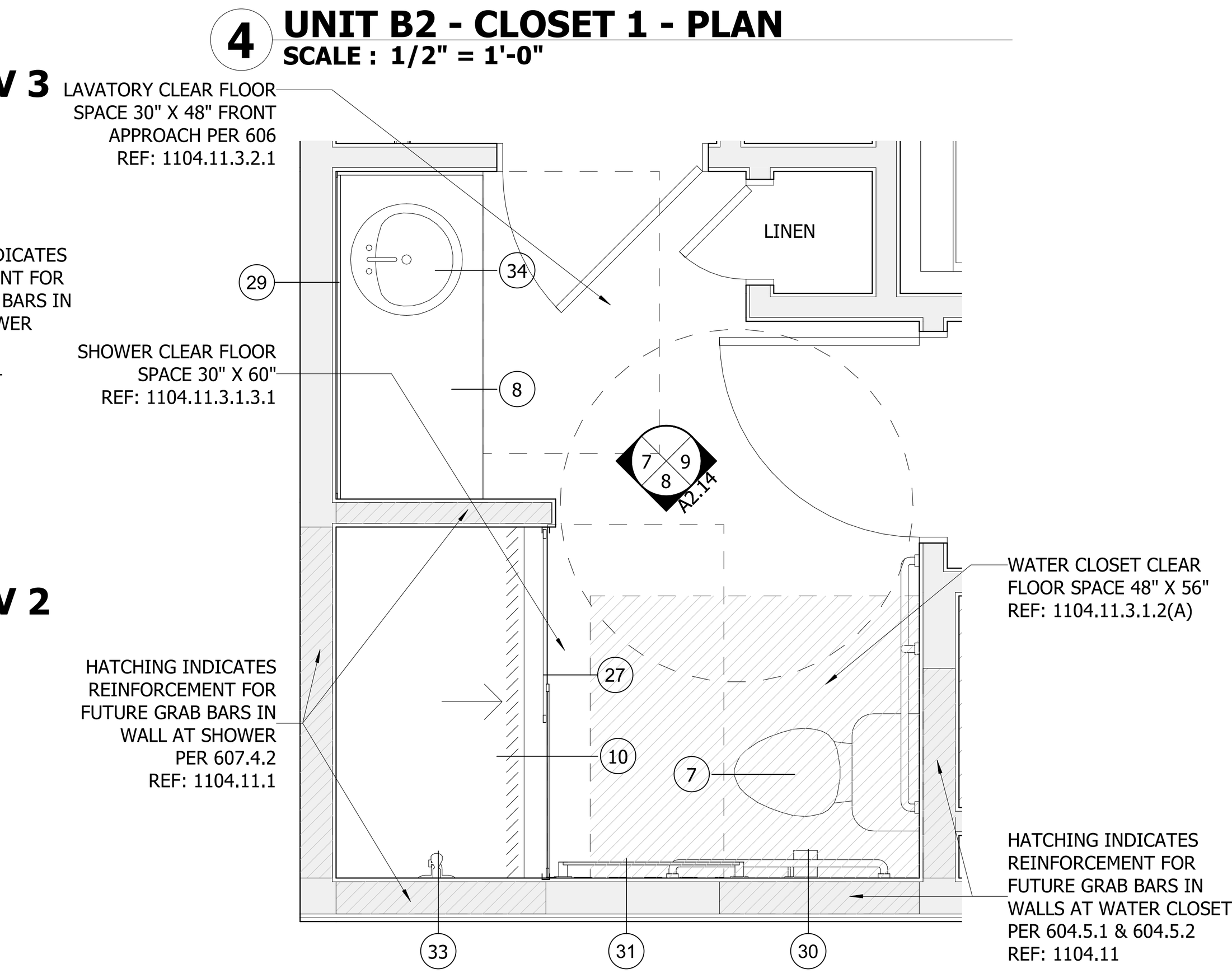


2 UNIT B2 - BATHROOM 1 - PLAN
SCALE : 1/2" = 1'-0"

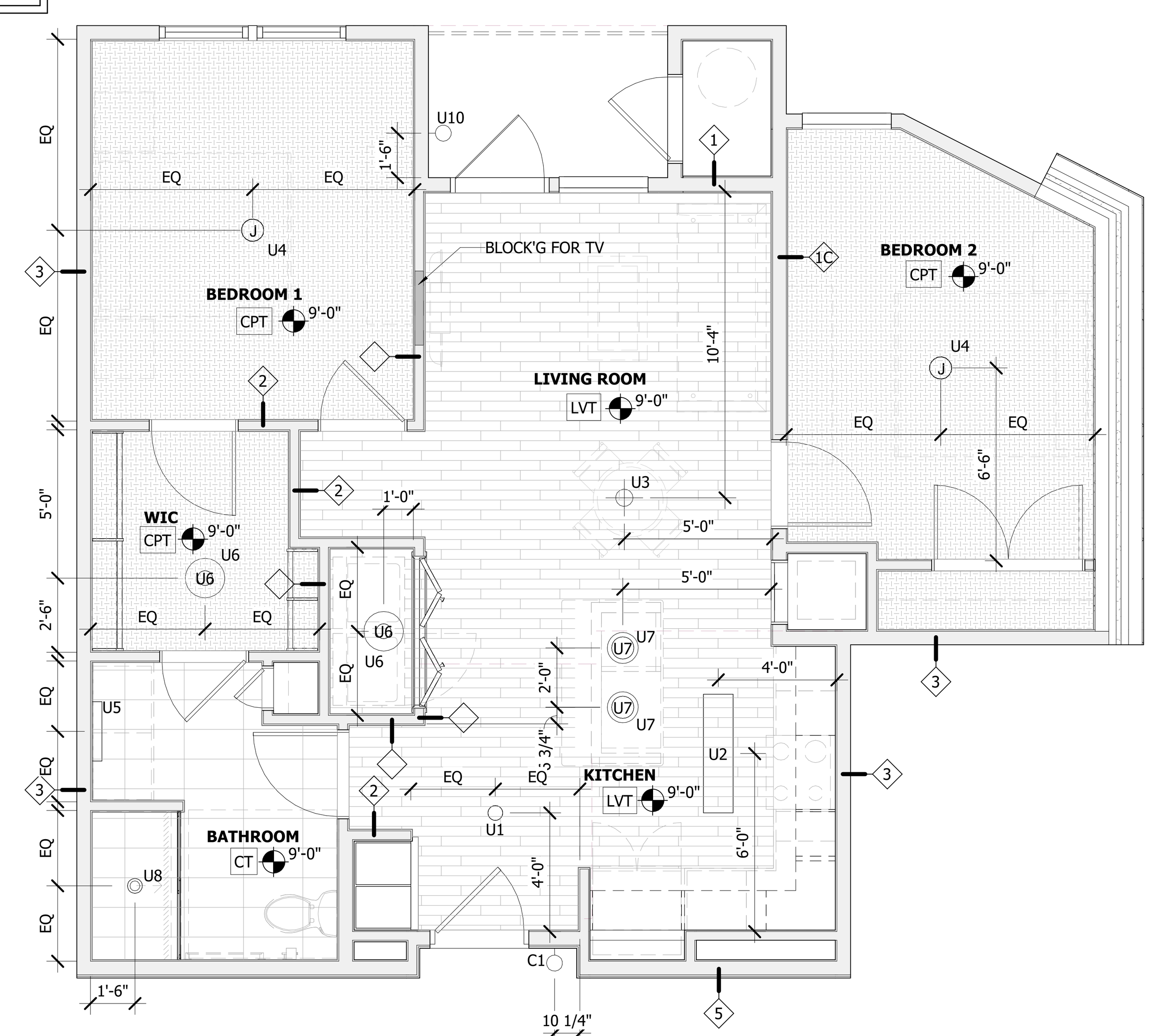


1A UNIT B2 RCP
SCALE : 1/4" = 1'-0"

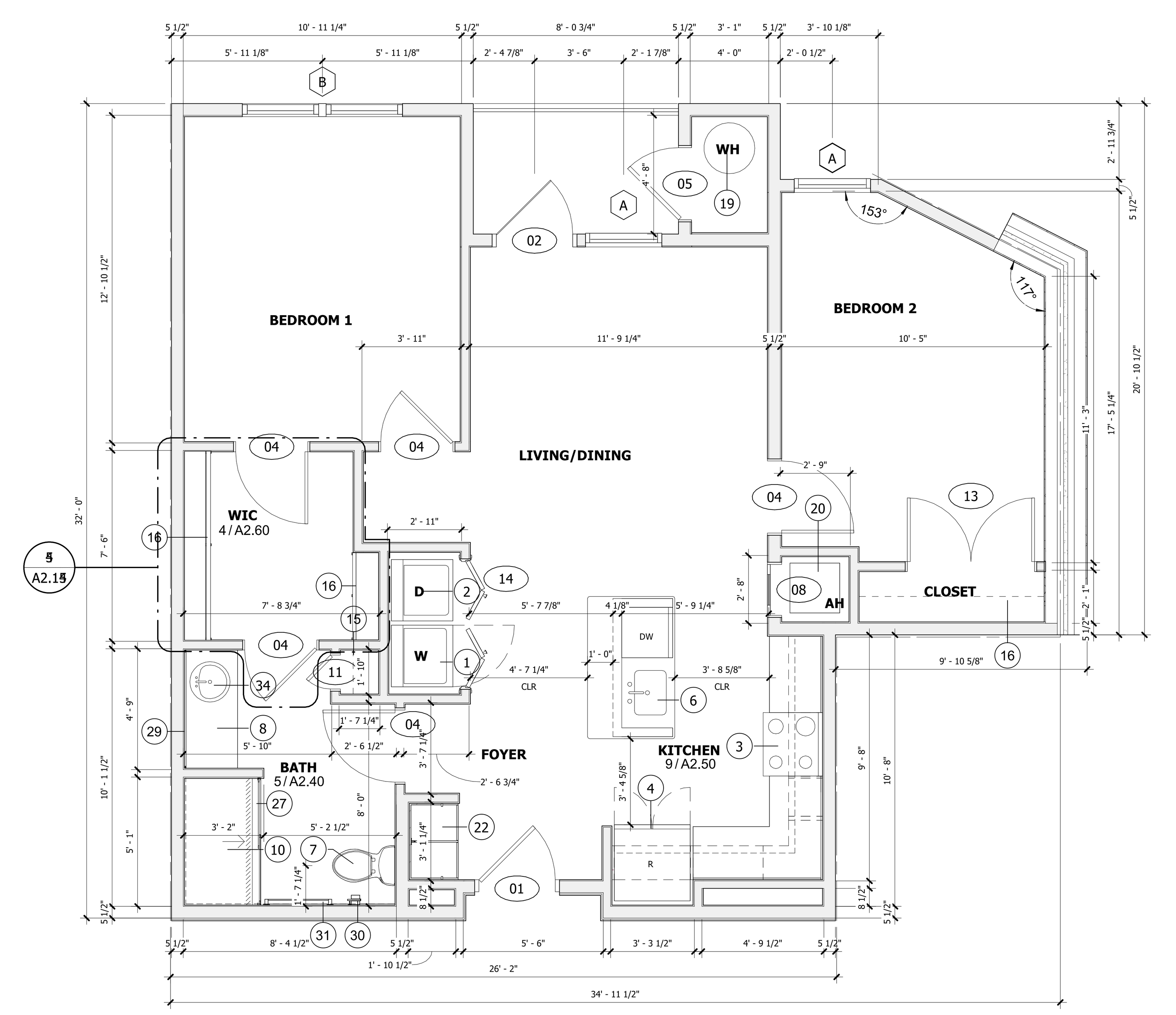


| ROOM # |
|---|
| UNIT B2 |
| 102 |
| 202 |
| 302 |
| 402 |
| Grand total: 4 |

| Unit-B2 | 932 SF |
|---|---|

1 UNIT - B2
SCALE : 1/4" = 1'-0"

ALL REPORTS, PLANS, SPECIFICATIONS AND COMPUTER FILES RELATING TO THIS PROJECT ARE THE PROPERTY OF THE MARTIN ARCHITECTURAL GROUP. THE MARTIN ARCHITECTURAL GROUP RETAINS ALL COMMON LAW, STATUTE AND OTHER RESERVED RIGHTS INCLUDING THE COPYRIGHT THERETO. REPRODUCTION OF THE MATERIAL HEREIN OR SUBSTANTIAL USE WITHOUT WRITTEN PERMISSION OF THE MARTIN ARCHITECTURAL GROUP VIOLATES THE COPYRIGHT LAWS OF THE UNITED STATES AND WILL BE SUBJECT TO LEGAL PROSECUTION.
©2022, The Martin Architectural Group, P.C.

THE MARTIN ARCHITECTURAL GROUP, P.C.
ARCHITECTS AND LAND PLANNERS
A PROFESSIONAL CORPORATION
240 NORTH 22ND STREET, PHILADELPHIA, PA, 19103
P (215) 665-1080 F (215) 561-5064

| | |
|---|---|
| P.A.: | DREW ROMANIC |
| P.M.: | JASON DECAMPLI |
| DRAWN BY: | Author |
| PROJECT NO: | 1362-12 |

| NO. | REVISION | DATE |
|---|---|---|
| 1 | PERMIT SET | 12/20/22 |

UNIT PLANS (UNIT B2)
**Granite Run Apartment 02**
MIDDLETOWN TOWNSHIP, PA

| | |
|---|---|
| SCALE: | |
| DATE: | 09/09/22 |

# A2.14

©2022, The Martin Architectural Group, P.C.

## DOOR SCHEDULE - DWELLING UNIT

| MARK | DOOR TYPE | WIDTH | HEIGHT | DOOR MATERIAL | FRAME TYPE | FRAME MATERIAL | FIRE RATING | REMARKS |
|---|---|---|---|---|---|---|---|---|
| 01 | UA | 3'-0" | 7'-0" | MTL | F1 | MTL | 20 min. | UNIT ENTRY - SPRING HINGES |
| 02 | UE | 3'-0" | 7'-0" | VY | F1 | VY | | BALCONY DOOR |
| 03 | UB | 3'-0" | 6'-8" | MTE | F1 | WD | | |
| 04 | UB | 2'-10" | 6'-8" | MTE | F1 | WD | | |
| 05 | UA | 2'-10" | 6'-8" | EM | F1 | MTL | | UNIT EXT. MECH DOOR |
| 06 | UB | 2'-6" | 6'-8" | MTE | F1 | WD | | |
| 07 | UB | 2'-0" | 6'-8" | MTE | F1 | WD | | |
| 08 | UC | 2'-0" | 6'-8" | MTE | F1 | WD | | LOUVERED AIR HANDLER |
| 09 | UC | 1'-6" | 6'-8" | MTE | F1 | WD | | LOUVERED AIR HANDLER |
| 10 | UB | 1'-6" | 6'-8" | MTE | F1 | WD | | |
| 11 | UB | 1'-4" | 6'-8" | MTE | F1 | WD | | |
| 12 | UDD | 4'-0" | 6'-8" | MTE | | WD | | SLIDING BARN DOOR |
| 13 | UBB | 5'-0" | 6'-8" | MTE | F2 | WD | | DOUBLE SWING DOOR |
| 14 | UCC | 5'-0" | 6'-8" | MTE | F2 | WD | | LOUVERED BI-FOLD |
| 15 | UCC | 6'-0" | 6'-8" | MTE | F2 | WD | | LOUVERED BI-FOLD |
| 19 | UB | 1'-9" | 6'-8" | MTE | F1 | WD | | |
| E | | 3'-0" | 7'-0" | | | | | |
| EE | | 6'-0" | 7'-0" | | | | | |
| F | | 6'-0" | 7'-0" | | | | | *RATED GLASS |

## ROOM FINISH SCHEDULE

| SPACE | FLOOR | WALL | CEILING | HEIGHT | REMARKS |
|---|---|---|---|---|---|
| KITCHEN | 3 | A | 1 | 9'-0" | |
| LIVING RM. | 3 | A | 1 | 9'-0" | |
| BEDROOMS | 1 | A | 1 | 9'-0" | |
| DEN | 3 | A | 1 | 9'-0" | |
| BATHS | 4 | B/C | 2 | 9'-0" | |
| CLOSETS | / | A | 1 | 9'-0" | FLOORING: MATCH ADJ. |
| LAUNDRY | 3 | A | 2 | 9'-0" | FLOORING: MATCH ADJ. |
| UNIT-HVAC | / | A | 1 | 9'-0" | FL.: GYPCRETE PAINT-LIGHT GRAY |

### MATERIAL CODE

| | FLR. / BASE | | WALL | | CEILING |
|---|---|---|---|---|---|
| 1 | CPT / WD | A | G.W.B. | 1 | G.W.B. |
| 2 | | B | MR.G.W.B. | 2 | MR.G.W.B. |
| 3 | LVT / WD | C | CT-2 | 3 | |
| 4 | CT / CT | D | | 4 | |
| 5 | | E | | 5 | |
| 6 | | F | | 6 | |
| 7 | | G | | 7 | |
| 8 | | H | | 8 | |

MATERIAL GLOSSARY

| | |
|---|---|
| CPT | CARPET - SHAW GULF WINDS - COLOR: 532 MINERAL |
| CT-1 | CERAMIC TILE - 12X24 FLORIM MATERIA - COLOR: HONED 02 |
| CT-2 | CERAMIC TILE - 12X24 FLORIM MATERIA - COLOR: STONE CALACATTA |
| G.W.B. | GYPSUM WALL BOARD |
| MR.G.W.B. | MOISTURE RESISTANT G.W.B. |
| LVT | VINYL WOOD PLANK - SHAW TERRAIN 12 MIL - COLOR: 766 ECHO |
| WD. | WOOD |

## UNIT DOOR TYPES

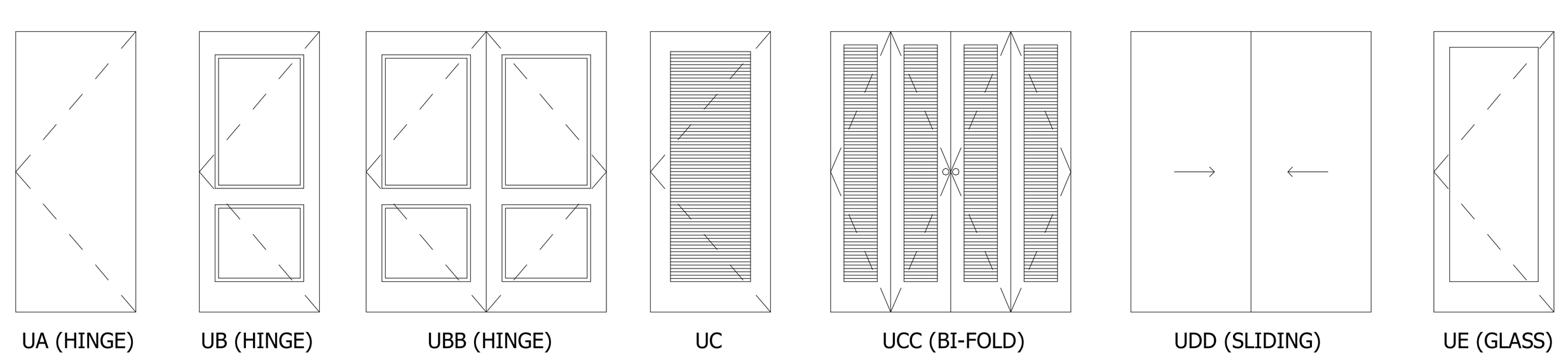


## FRAME TYPES

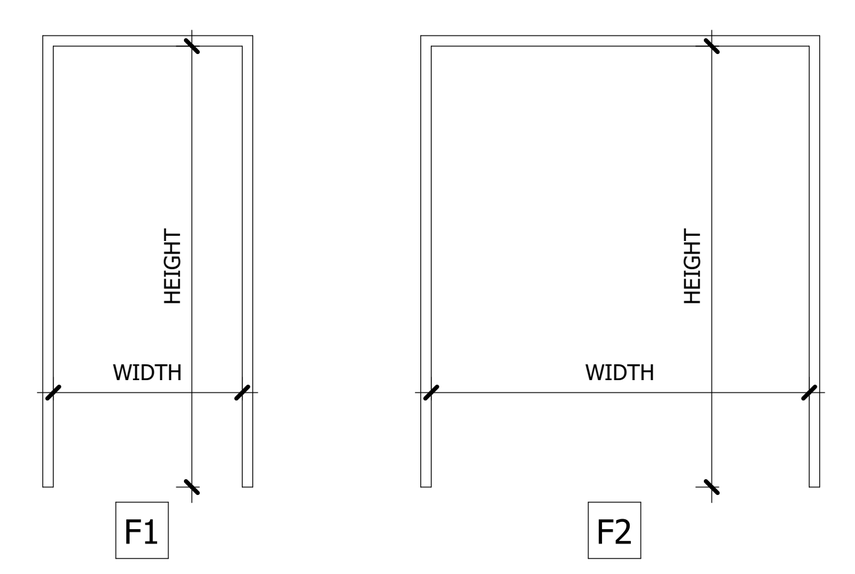


DOOR/FRAME MATERIAL KEY:

| | |
|---|---|
| AL | ALUMINUM |
| EM | EXTERIOR METAL |
| GL | GLASS |
| HC | HOLLOW CORE |
| HM | HOLLOW METAL |
| MTL | METAL |
| SC | SOLID CORE |
| SR | STILE & RAIL |
| VY | VINYL |
| WD | WOOD |
| MTE | MASONITE |

## WINDOW SCHEDULE

| MARK | WIDTH | HEIGHT | WINDOW TYPE | CONSTRUCTION TYPE | COMMENTS |
|---|---|---|---|---|---|
| A | 3'-0" | 6'-0" | SINGLE HUNG | VINYL | All windows to be provided with opening limiters. See specifications. |
| B | 6'-3 1/2" | 6'-0" | SINGLE HUNG | VINYL | All windows to be provided with opening limiters. See specifications. |

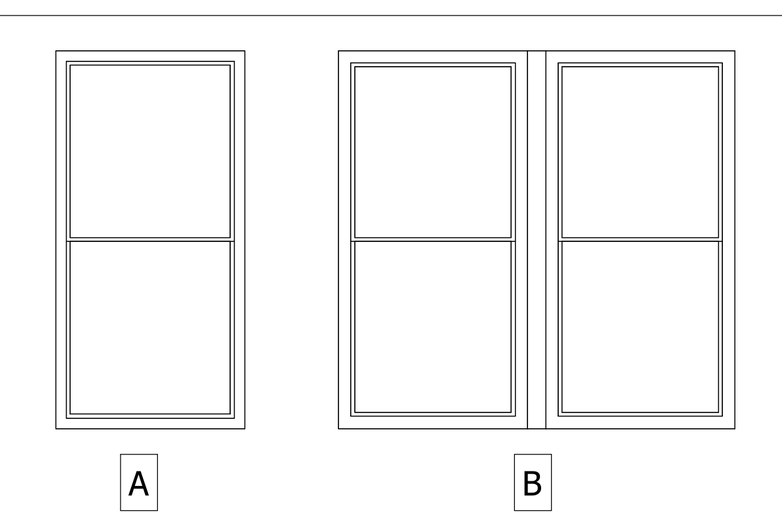


NOTE: (2) 2X6 FRT STUDS PROVIDED BETWEEN GROUP WINDOWS. (TYPICAL)
PROVIDE 4" LIMITATION FOR WINDOW LIMITERS ON ALL WINDOWS

## LIGHT FIXTURE LEGEND

| | |
|---|---|
| U1 | LITHONIA FMSATL-16-20840-BN; SEMI FLUSH MOUNT |
| U2 | LITHONIA FMFL-30840-SATL-BN; LINEAR FLUSH MOUNT |
| U3 | LITHONIA DFMADRL-14-F01; FMPANL-14-20840M6; LED SURFACE MOUNT DRUM |
| U4 | SATCO COVER PLATE |
| U5 | PROGRESS P300187-009-30; LED BATH VANITY |
| U6 | LITHONIA FMMUSL-9-14840-WH; LED CLOSET MUSHROOM |
| U7 | LITHONIA MDPC-BNP-M6; DGDT 1003 M6 |
| U8 | COOPER SMD6R-12-930-WH; 1200 LUMEN SLIM SURFACE (120 VOLT ONLY) |
| U9 | NUVO 62-1161; 7" LED FLUSH MOUNT DISCK |
| U10 | LITHONIA OLWPLED-P1-40K-120-PE-BZ; LED MINI WALL PACK |

## UNIT PLAN AND INTERIOR ELEVATION KEYNOTES

| Number | Description |
|---|---|
| 1 | WASHER |
| 2 | DRYER |
| 3 | RANGE / OVEN |
| 4 | REFRIGERATOR |
| 5 | DISHWASHER |
| 6 | KITCHEN SINK / FAUCET |
| 7 | TOILET |
| 8 | VANITY - SEE ELEVATION FOR SIZE |
| 9 | 30"X60" TUB |
| 10 | 36"X60" SHOWER BASE |
| 11 | 32"X60" SHOWER BASE |
| 12 | ACCESSIBLE THRESHOLD - MARBLE |
| 13 | ACCESSIBLE THRESHOLD - ALUMINIUM |
| 14 | SOFFIT OVER REFRIGERATOR AND BEHIND CABINET |
| 15 | LINEN SHELVES (5) PER SPECIFICATION |
| 16 | WIRE SHEVLING |
| 17 | KNEE WALL BELOW COUNTERTOP |
| 18 | BALCONY RAILING @ 42" HIGH |
| 19 | WALL MOUNTED HOT WATER HEATER |
| 20 | HVAC UNIT MOUNTED ON WALL |
| 21 | PRE ROCK BEHIND BATHING FIXTURES |
| 22 | CUBBIE CABINETS |
| 23 | MICROWAVE WITH RECIRCULATION HOOD |
| 24 | WALL TILE BETWEEN CONTERTOP AND WALL CABINET. SEE 1D DRAWING |
| 25 | BLOCKING FOR GRAB BAR. SEE FIG. 4- SHEET A0.06 |
| 26 | 24" HORIZONTAL GRAB BAR @ TUB BACK WALL. SEE FIG. 4 - SHEET A0.06 |
| 27 | SHOWER ROD |
| 28 | NOT USED |
| 29 | PAINTED FRAME MIRROR |
| 30 | TOILET TISSUE HOLDER @ 26" A.F.F. |
| 31 | 30" TOWEL BAR |
| 32 | ROBE HOOK |
| 33 | SHOWER HEAD |
| 34 | VANITY SINK BOWL |

**NOTES:**

1. SEE SPECIFICATIONS FOR ADDITIONAL INFORMATION.
2. ALL DOOR HARDWARE TO BE COMPLIANT WITH THE FEDERAL FAIR HOUSING ACT (FHA).
3. DOORS SHALL BE OPENABLE WITH NO MORE THAN ONE RELEASING OPERATION.
4. PROVIDE ACCESSIBLE THRESHOLDS AT ALL DOORS.
5. ALL UNITS ARE ADAPTABLE PER FHA. SEE SHEET A0.06 FOR ADDITIONAL INFORMATION.
6. ALL DIMENSIONS ARE TO ROUGH FRAMING U.N.O.
7. ALL WALLS ARE 2X4 STUDS UNLESS NOTED OTHERWISE.
8. ALL TENANT SEPERATIONS AND CORRIDOR WALLS ARE 2X6 UNLESS NOTED OTHERWISE.
9. PATIO AT FIRST FLOOR 4" BELOW UNIT FINISH FLOOR.
10. BALCONIES ARE FLUSH WITH GYPCRETE TOPPING. SEE DETAIL.
11. ALL TOILETS SET ON NEOPRENE GASKET WITH INSULATED PIPE TRAP.
12. ALL KITCHEN APPLIANCES TO HAVE STAINLESS STEEL FRONTS.
13. WHERE DRAWINGS ARE IN CONFLICT WITH OTHER DRAWINGS, CONTRACTOR SHALL NOTIFY THE ARCHITECT.
14. PROVIDE BLOCKING FOR GRAB BARS IN ALL BATHROOMS
15. DIMENSION TO STUD UNLESS OTHERWISE NOTED
16. DIMESNION TO FINISH @ CABINETS
17. PROVIDE BLOCKING FOR TV WALL MOUNT, CENTER AT 60" A.F.F.
18. ALL BATHROOM VANITES ARE 21" IN DEPTH

| ROOM FINISH MATERIAL CODE | |
|---|---|
| CPT | CARPET |
| CT | CERAMIC TILE |
| CONC | CONCRETE |
| GWB | GYPSUM WALL BOARD |
| MR GWB | MOISTURE RESISTANT GWB |
| V | SHEET VINYL |
| VWP | VINYL WOOD PLANK |
| VCT | VINYL COMPOSITE TILE |
| WD | WOOD |

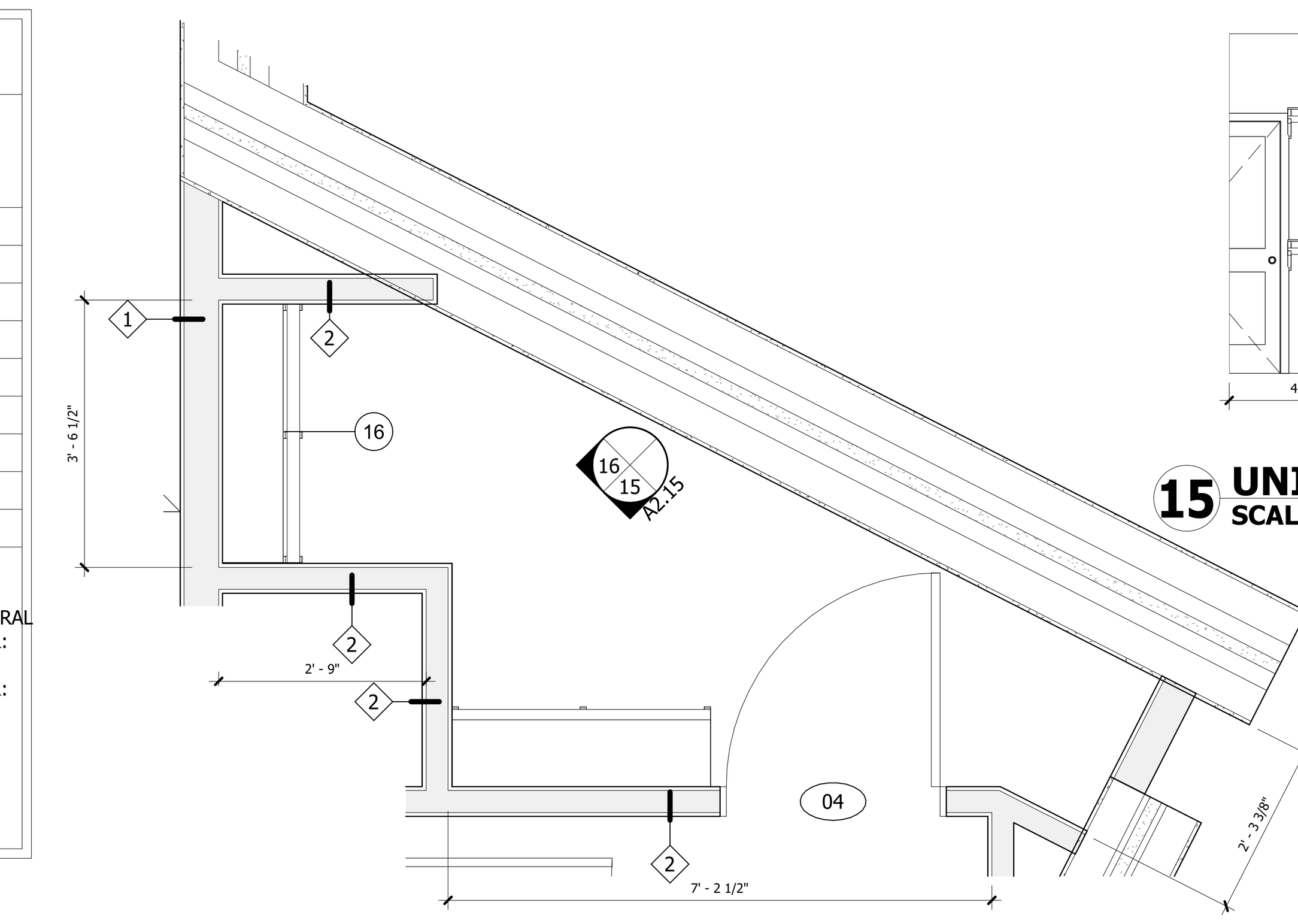

6 **UNIT B3 - CLOSET 2 - PLAN**
SCALE : 1/2" = 1'-0"

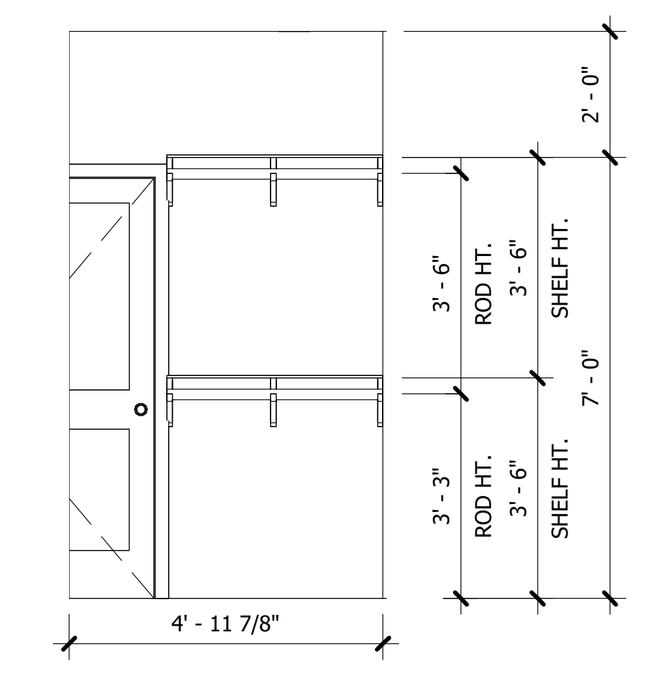

15 **UNIT B3 - CLOSET 2 - ELEV 2**
SCALE : 1/4" = 1'-0"

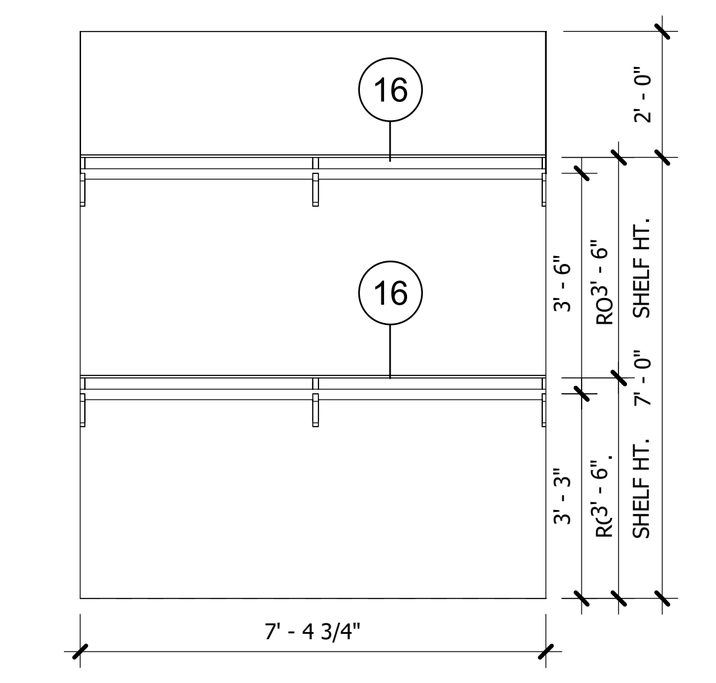

8 **UNIT B3 - CLOSET 1 - ELEV 2**
SCALE : 1/4" = 1'-0"

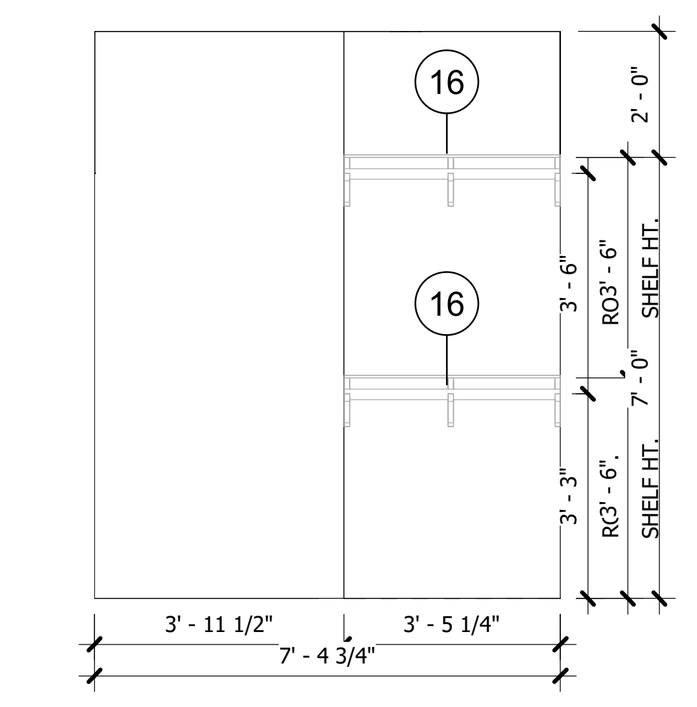

7 **UNIT B3 - CLOSET 1 - ELEV 1**
SCALE : 1/4" = 1'-0"

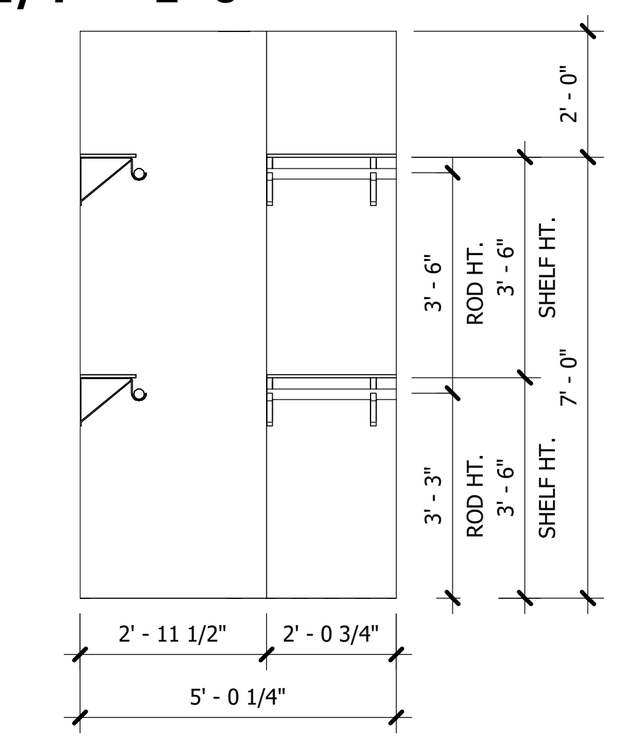

16 **UNIT B3 - CLOSET 2 - ELEV 1**
SCALE : 1/4" = 1'-0"

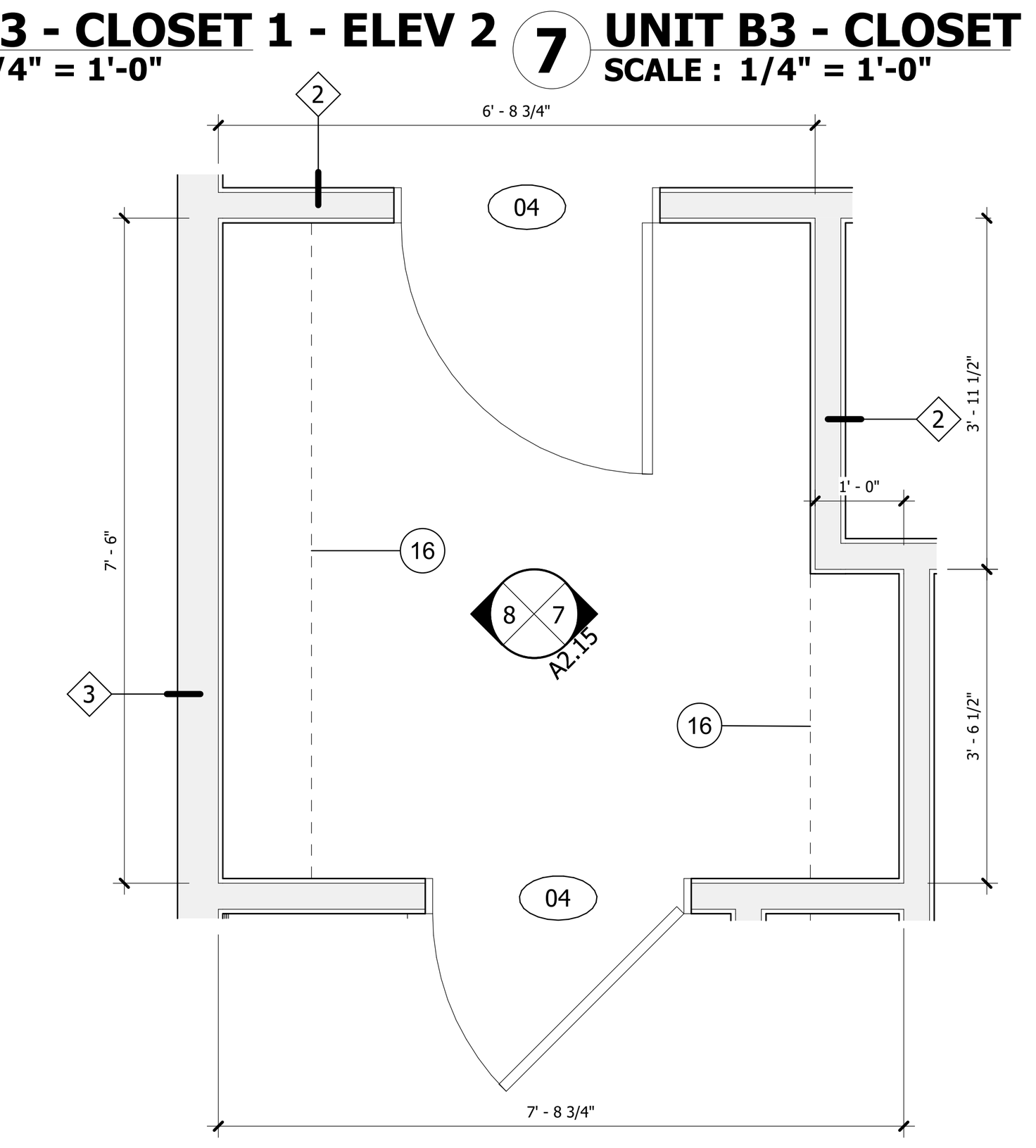

5 **UNIT B3 - CLOSET 1 - PLAN**
SCALE : 1/2" = 1'-0"

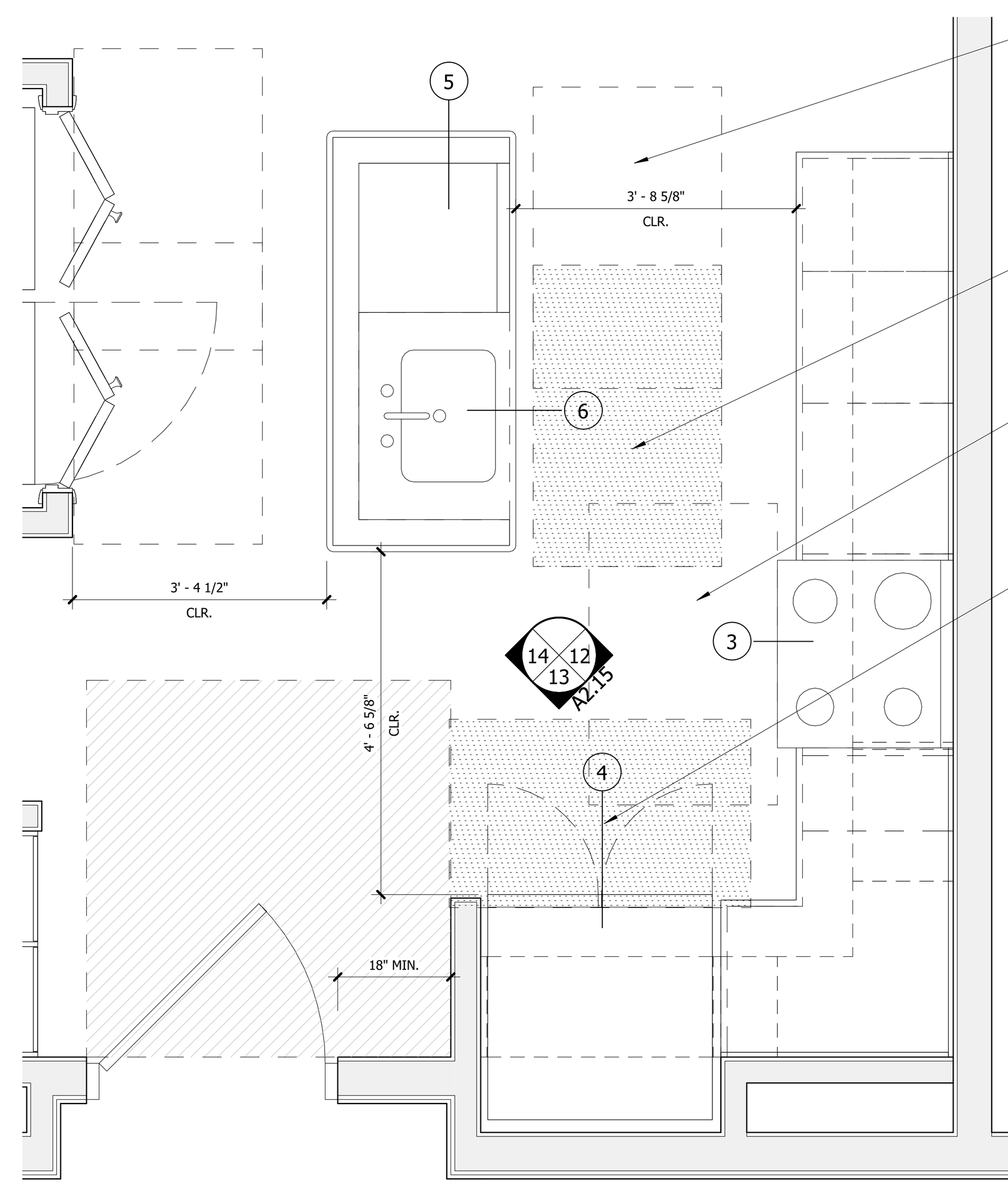

DISHWASHER CLEAR FLOOR SPACE 30" X 48" CENTERED ON FIXTURE PER 305.3 REF: 1104.12.2.2

SINK CLEAR FLOOR SPACE 30" X 48" CENTERED ON BOWL PER 305.3 REF: 1104.12.2.1

RANGE OVEN CLEAN FLOOR SPACE 30" X 48" CENTERED ON RANGE PER 305.3 REF: 1104.12.2.3

REF. CLEAR FLOOR SPACE 30" X 48" CENTERLINE SHALL BE OFFSET 24" MAX. PER 305.3 REF: 1104.12.2.5

3 **UNIT B3 - KITCHEN - PLAN**
SCALE : 1/2" = 1'-0"



14 **UNIT B3 - KITCHEN - ELEV 3**
SCALE : 1/4" = 1'-0"

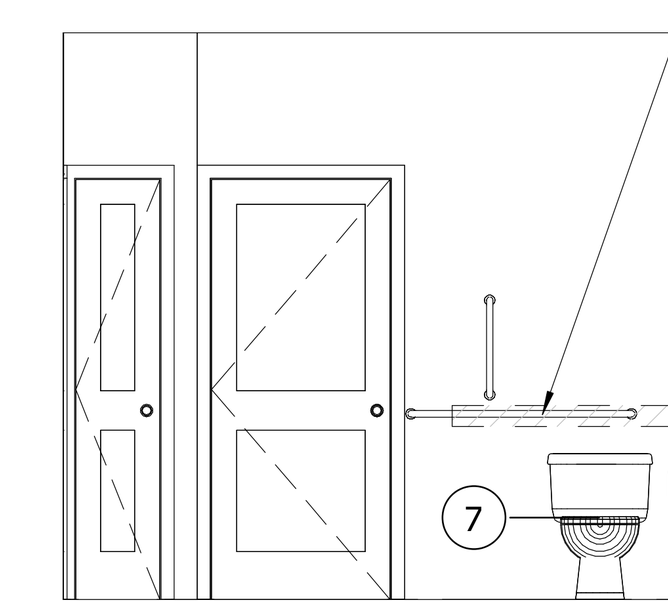

HATCHING INDICATES REINFORCEMENT FOR FUTURE GRAB BARS IN WALLS AT WATER CLOSET PER 604.5.1 & 604.5.2 REF: 1104.11

11 **UNIT B3 - BATHROOM - ELEV 3**
SCALE : 1/4" = 1'-0"

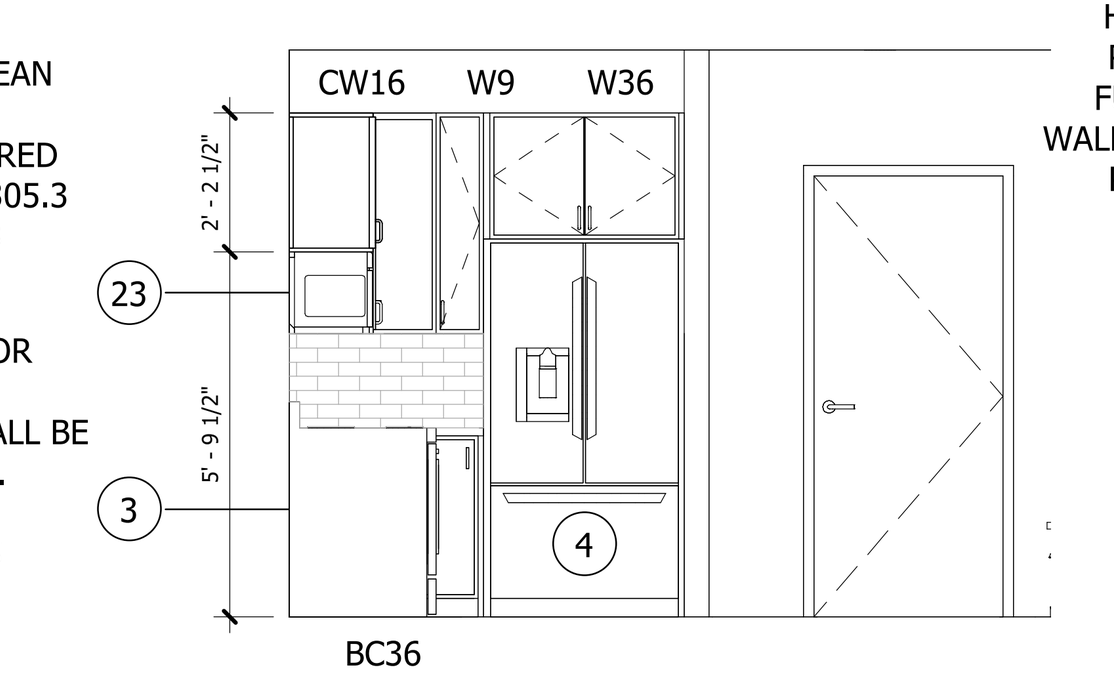

13 **UNIT B3 - KITCHEN - ELEV 2**
SCALE : 1/4" = 1'-0"

HATCHING INDICATES REINFORCEMENT FOR FUTURE GRAB BARS IN WALLS AT WATER CLOSET PER 604.5.1 & 604.5.2 REF: 1104.11

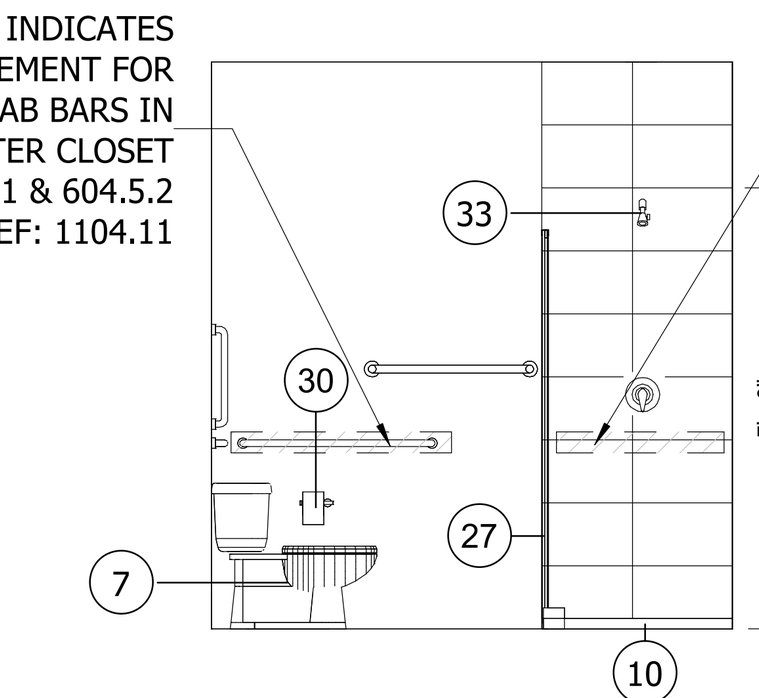

HATCHING INDICATES REINFORCEMENT FOR FUTURE GRAB BARS IN WALL AT SHOWER PER 607.4.2 REF: 1104.11.1

10 **UNIT B3 - BATHROOM - ELEV 2**
SCALE : 1/4" = 1'-0"

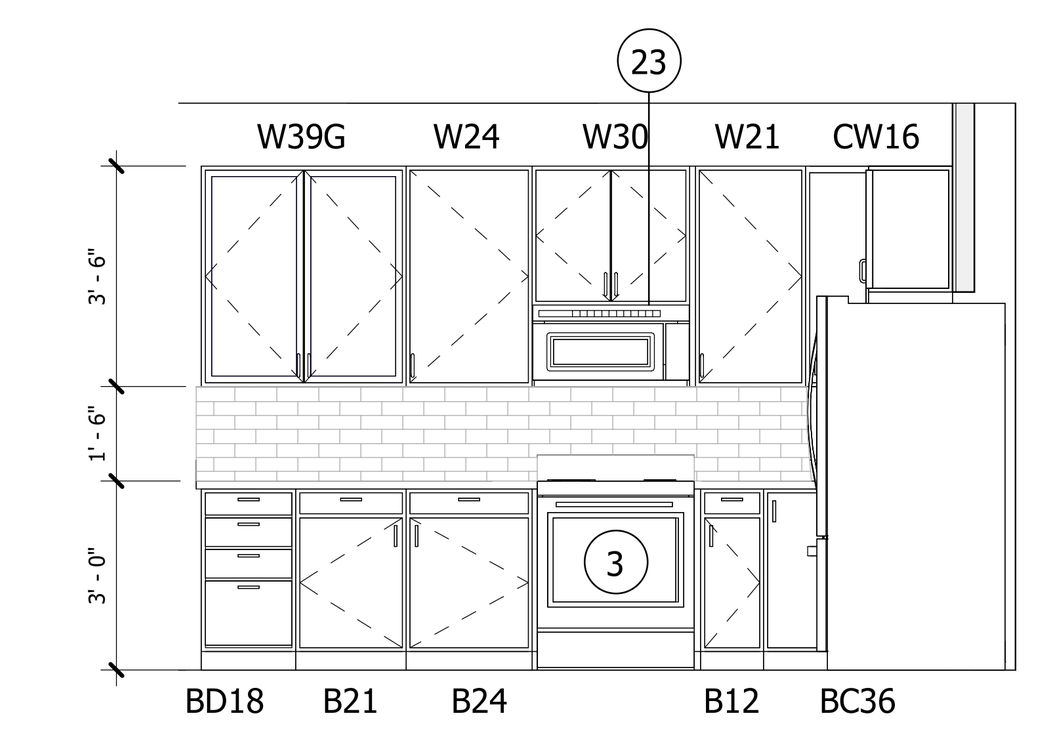

12 **UNIT B3 - KITCHEN - ELEV 1**
SCALE : 1/4" = 1'-0"

HATCHING INDICATES REINFORCEMENT FOR FUTURE GRAB BARS IN WALL AT SHOWER PER 607.4.2 REF: 1104.11.1

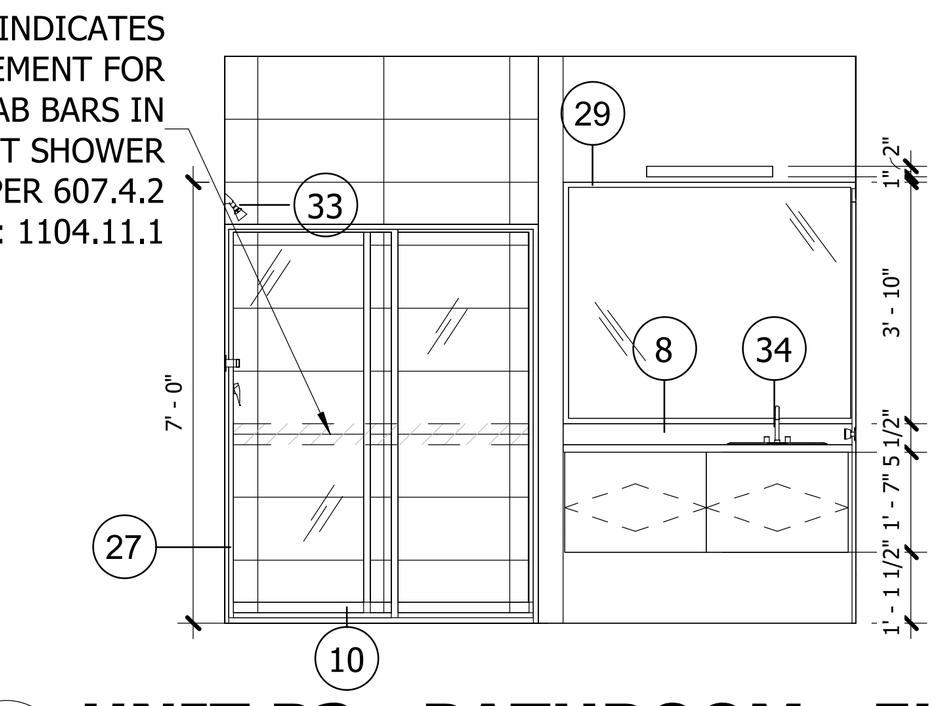

9 **UNIT B3 - BATHROOM - ELEV 1**
SCALE : 1/4" = 1'-0"

LAVATORY CLEAR FLOOR SPACE 30" X 48" FRONT APPROACH PER 606 REF: 1104.11.3.2.1

SHOWER CLEAR FLOOR SPACE 30" X 60" REF: 1104.11.3.1.3.1

HATCHING INDICATES REINFORCEMENT FOR FUTURE GRAB BARS IN WALL AT SHOWER PER 607.4.2 REF: 1104.11.1

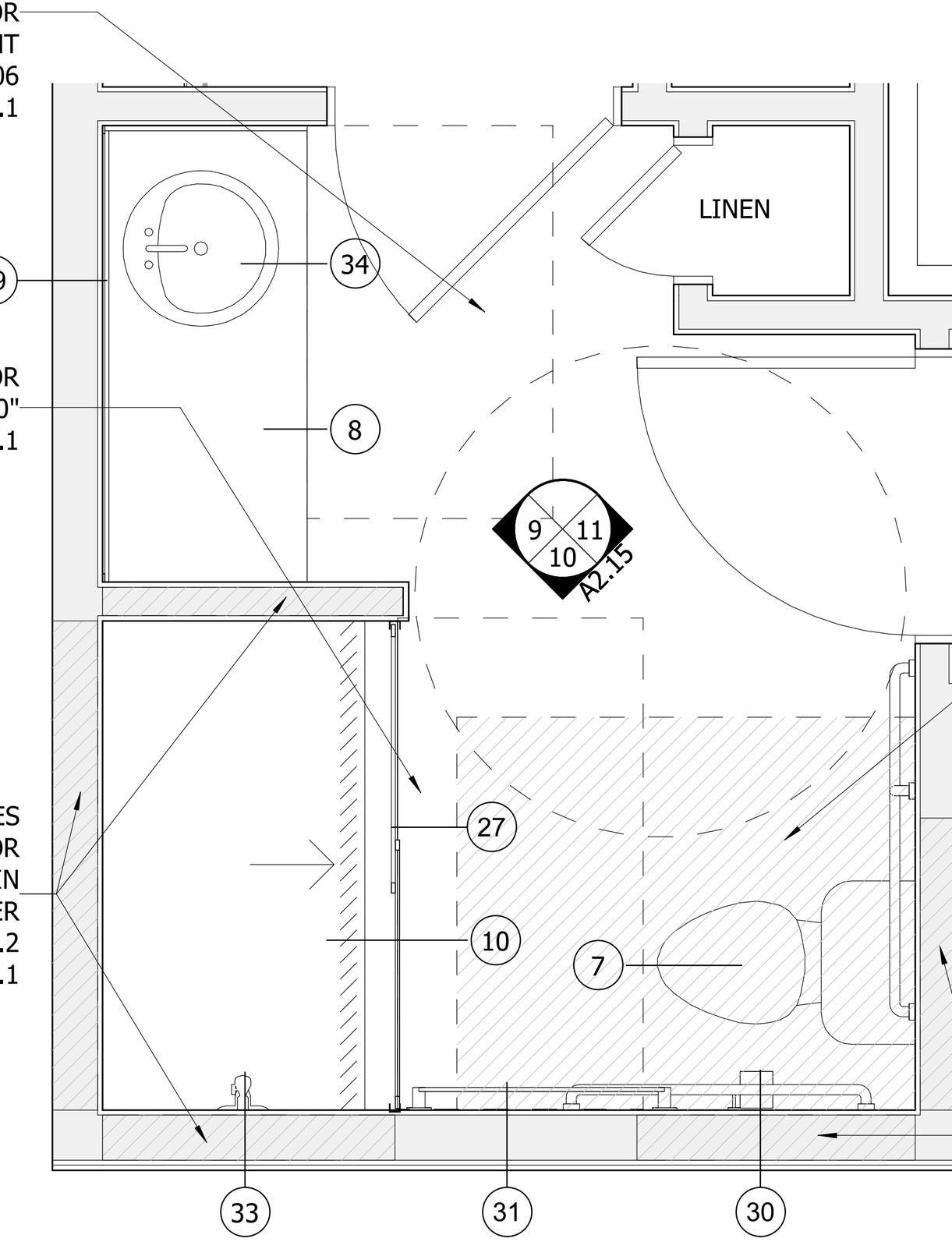

WATER CLOSET CLEAR FLOOR SPACE 48" X 56" REF: 1104.11.3.1.2(A)

HATCHING INDICATES REINFORCEMENT FOR FUTURE GRAB BARS IN WALLS AT WATER CLOSET PER 604.5.1 & 604.5.2 REF: 1104.11

4 **UNIT B3 - BATHROOM 1 - PLAN**
SCALE : 1/2" = 1'-0"

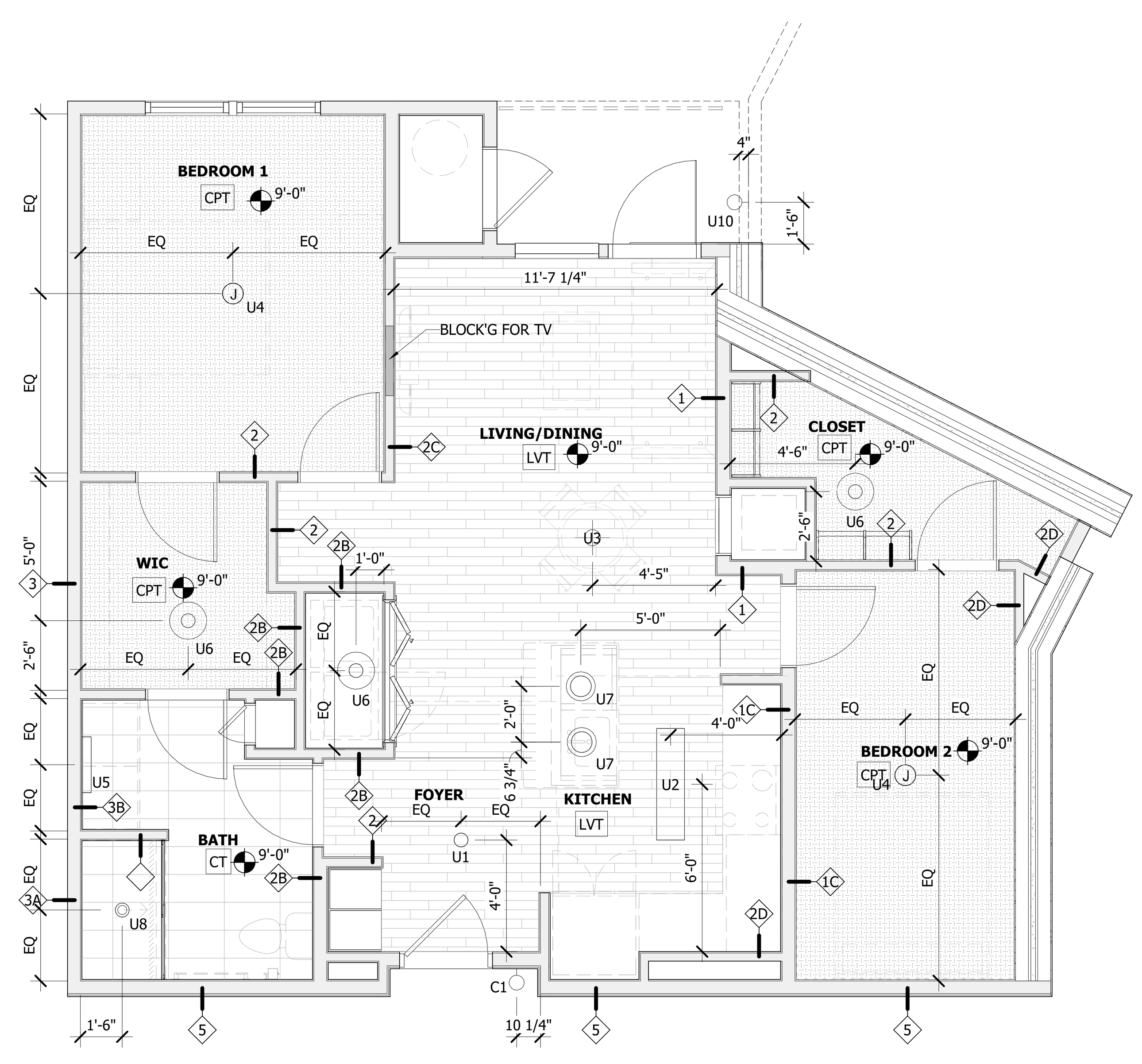


1 **UNIT B3 RCP**
SCALE : 1/4" = 1'-0"

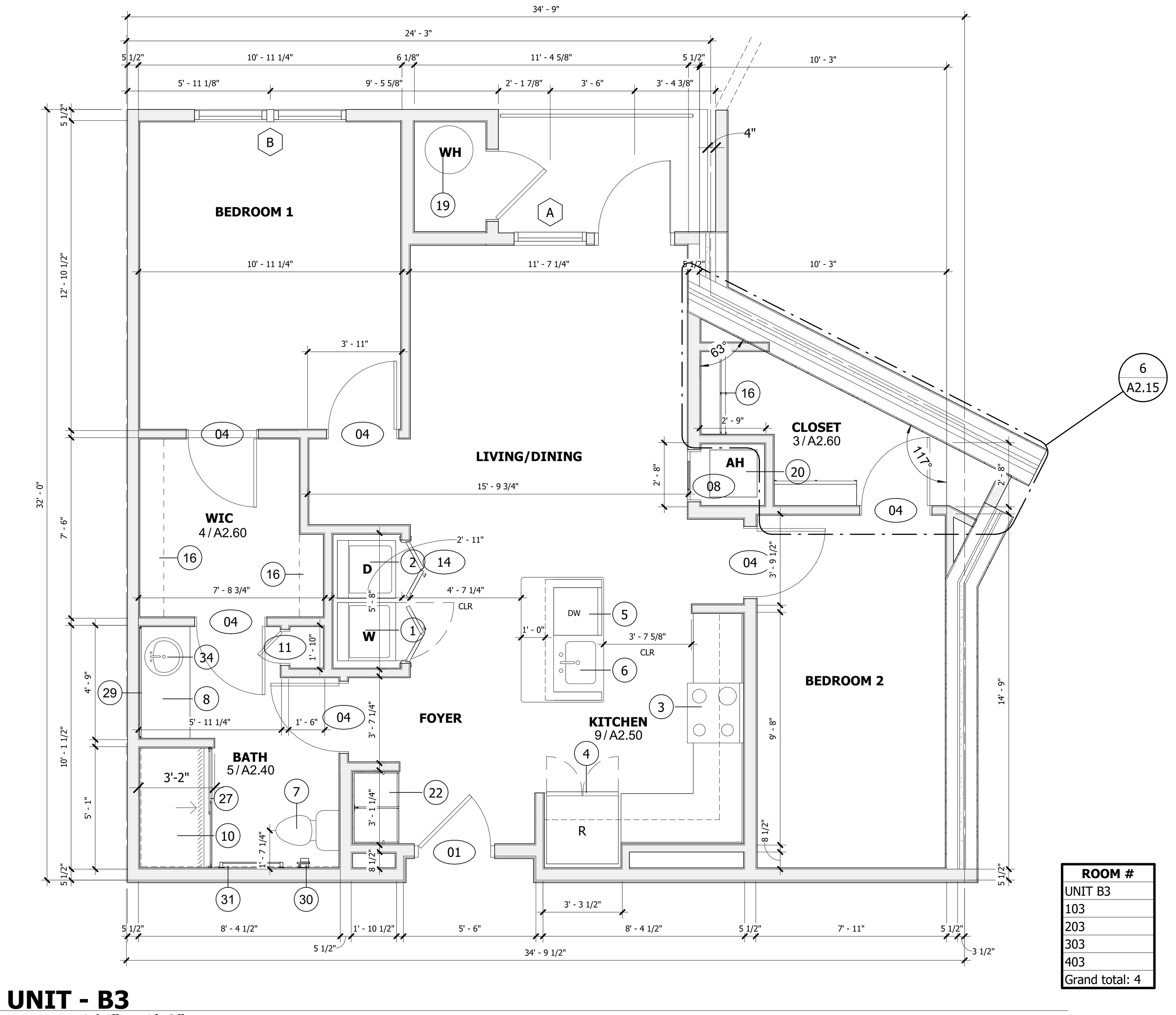


| ROOM # |
|---|
| UNIT B3 |
| 103 |
| 203 |
| 303 |
| 403 |
| Grand total: 4 |

2 **UNIT - B3**
SCALE : 1/4" = 1'-0"

| Unit-B3 | 955 SF |
|---|---|


ALL REPORTS, PLANS, SPECIFICATIONS AND COMPUTER FILES RELATING TO THIS PROJECT ARE THE PROPERTY OF THE MARTIN ARCHITECTURAL GROUP. THE MARTIN ARCHITECTURAL GROUP RETAINS ALL COMMON LAW, STATUTE AND OTHER RESERVED RIGHTS INCLUDING THE COPYRIGHT THERETO. REPRODUCTION OF THE MATERIAL HEREIN OR SUBSTANTIAL USE WITHOUT WRITTEN PERMISSION OF THE MARTIN ARCHITECTURAL GROUP VIOLATES THE COPYRIGHT LAWS OF THE UNITED STATES AND WILL BE SUBJECT TO LEGAL PROSECUTION.
©2022, The Martin Architectural Group, P.C.


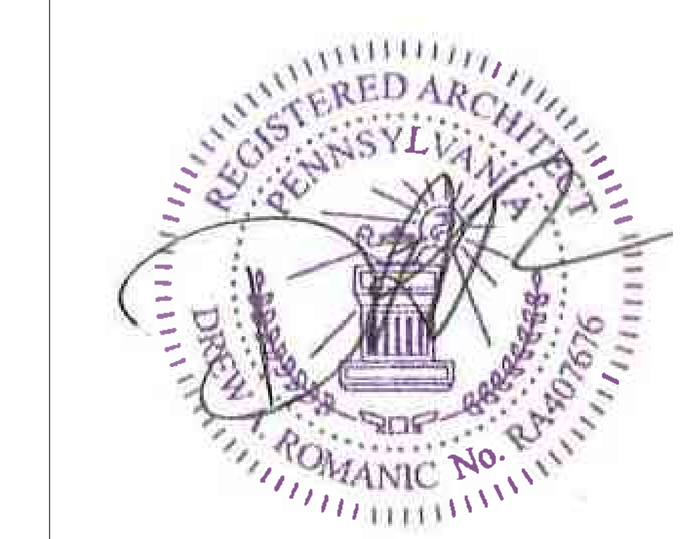



THE MARTIN ARCHITECTURAL GROUP, P.C.
ARCHITECTS AND LAND PLANNERS
A PROFESSIONAL CORPORATION
240 NORTH 22ND STREET, PHILADELPHIA, PA, 19103
P (215) 665-1080 F (215) 561-5064


| | |
|---|---|
| P.A.: | DREW ROMANIC |
| P.M.: | JASON DECAMPLI |
| DRAWN BY: | Author |
| PROJECT NO: | 1362-12 |

| NO. | REVISION | DATE |
|---|---|---|
| 1 | PERMIT SET | 12/20/22 |

# UNIT PLANS (UNIT B3)

**Granite Run Apartment 02**

MIDDLETOWN TOWNSHIP, PA

| | |
|---|---|
| SCALE: | |
| DATE: | 11/15/22 |

# A2.15

©2022, The Martin Architectural Group, P.C.

Printed: 1/13/2023 4:29:30 PM

**DOOR SCHEDULE - DWELLING UNIT**

| MARK | DOOR TYPE | WIDTH | HEIGHT | DOOR MATERIAL | FRAME TYPE | FRAME MATERIAL | FIRE RATING | REMARKS |
|---|---|---|---|---|---|---|---|---|
| 01 | UA | 3'-0" | 7'-0" | MTL | F1 | MTL | 20 min. | UNIT ENTRY - SPRING HINGES |
| 02 | UE | 3'-0" | 7'-0" | VY | F1 | VY | | BALCONY DOOR |
| 03 | UB | 3'-0" | 6'-8" | MTE | F1 | WD | | |
| 04 | UB | 2'-10" | 6'-8" | MTE | F1 | WD | | |
| 05 | UA | 2'-10" | 6'-8" | EM | F1 | MTL | | UNIT EXT. MECH DOOR |
| 06 | UB | 2'-6" | 6'-8" | MTE | F1 | WD | | |
| 07 | UB | 2'-0" | 6'-8" | MTE | F1 | WD | | |
| 08 | UC | 2'-0" | 6'-8" | MTE | F1 | WD | | LOUVERED AIR HANDLER |
| 09 | UC | 1'-6" | 6'-8" | MTE | F1 | WD | | LOUVERED AIR HANDLER |
| 10 | UB | 1'-6" | 6'-8" | MTE | F1 | WD | | |
| 11 | UB | 1'-4" | 6'-8" | MTE | F1 | WD | | |
| 12 | UDD | 4'-0" | 6'-8" | MTE | | WD | | SLIDING BARN DOOR |
| 13 | UBB | 5'-0" | 6'-8" | MTE | F2 | WD | | DOUBLE SWING DOOR |
| 14 | UCC | 5'-0" | 6'-8" | MTE | F2 | WD | | LOUVERED BI-FOLD |
| 15 | UCC | 6'-0" | 6'-8" | MTE | F2 | WD | | LOUVERED BI-FOLD |
| 19 | UB | 1'-9" | 6'-8" | MTE | F1 | WD | | |
| E | | 3'-0" | 7'-0" | | | | | |
| EE | | 6'-0" | 7'-0" | | | | | |
| F | | 6'-0" | 7'-0" | | | | | *RATED GLASS |

## ROOM FINISH SCHEDULE

| SPACE | FLOOR | WALL | CEILING | HEIGHT | REMARKS |
|---|---|---|---|---|---|
| KITCHEN | 3 | A | 1 | 9'-0" | |
| LIVING RM. | 3 | A | 1 | 9'-0" | |
| BEDROOMS | 1 | A | 1 | 9'-0" | |
| DEN | 3 | A | 1 | 9'-0" | |
| BATHS | 4 | B/C | 2 | 9'-0" | |
| CLOSETS | | A | 1 | 9'-0" | FLOORING: MATCH ADJ. |
| LAUNDRY | 3 | A | 2 | 9'-0" | FLOORING: MATCH ADJ. |
| UNIT-HVAC | | A | 1 | 9'-0" | FL.: GYPCRETE PAINT-LIGHT GRAY |

### MATERIAL CODE

| FLR. / BASE | | WALL | | CEILING | |
|---|---|---|---|---|---|
| 1 | CPT / WD | A | G.W.B. | 1 | G.W.B. |
| 2 | | B | MR.G.W.B. | 2 | MR.G.W.B. |
| 3 | LVT / WD | C | CT-2 | 3 | |
| 4 | CT / CT | D | | 4 | |
| 5 | | E | | 5 | |
| 6 | | F | | 6 | |
| 7 | | G | | 7 | |
| 8 | | H | | 8 | |

MATERIAL GLOSSARY

| | |
|---|---|
| CPT | CARPET - SHAW GULF WINDS - COLOR: 532 MINERAL |
| CT-1 | CERAMIC TILE - 12X24 FLORIM MATERIA - COLOR: HONED 02 |
| CT-2 | CERAMIC TILE - 12X24 FLORIM MATERIA - COLOR: STONE CALACATTA |
| G.W.B. | GYPSUM WALL BOARD |
| MR.G.W.B. | MOISTURE RESISTANT G.W.B. |
| LVT | VINYL WOOD PLANK - SHAW TERRAIN 12 MIL - COLOR: 766 ECHO |
| WD. | WOOD |

## UNIT DOOR TYPES

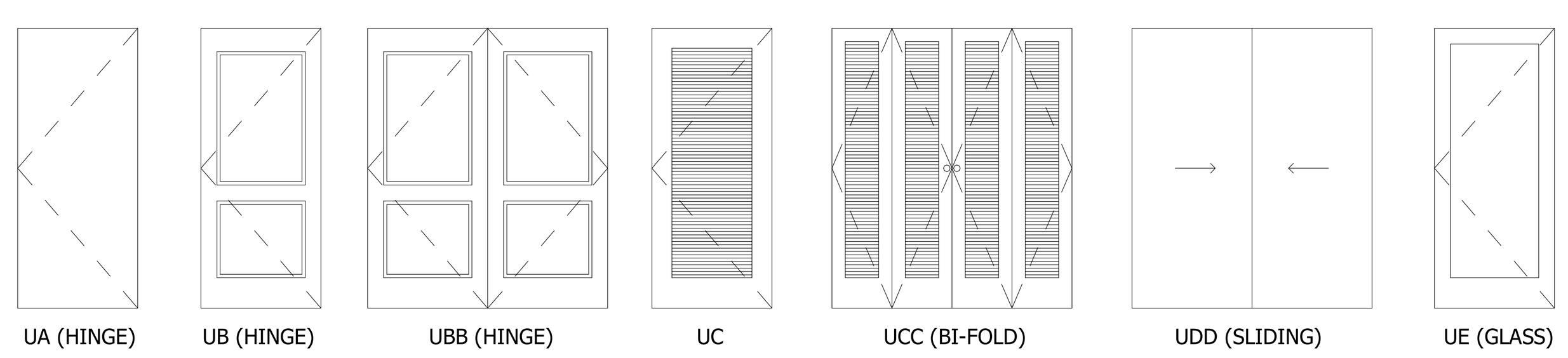


## FRAME TYPES

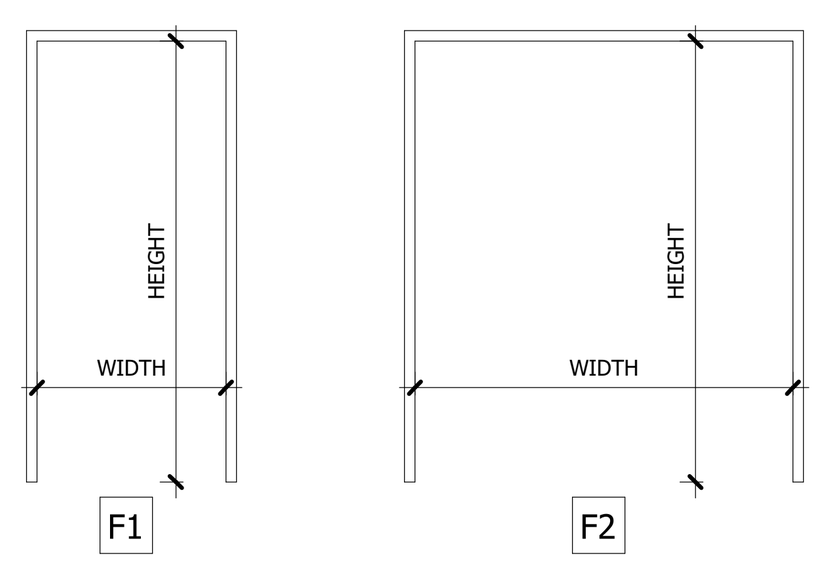


**DOOR/FRAME MATERIAL KEY:**

| | |
|---|---|
| AL | ALUMINUM |
| EM | EXTERIOR METAL |
| GL | GLASS |
| HC | HOLLOW CORE |
| HM | HOLLOW METAL |
| MTL | METAL |
| SC | SOLID CORE |
| SR | STILE & RAIL |
| VY | VINYL |
| WD | WOOD |
| MTE | MASONITE |

**WINDOW SCHEDULE**

| MARK | WIDTH | HEIGHT | WINDOW TYPE | CONSTRUCTION TYPE | COMMENTS |
|---|---|---|---|---|---|
| A | 3'-0" | 6'-0" | SINGLE HUNG | VINYL | All windows to be provided with opening limiters. See specifications. |
| B | 6'-3 1/2" | 6'-0" | SINGLE HUNG | VINYL | All windows to be provided with opening limiters. See specifications. |

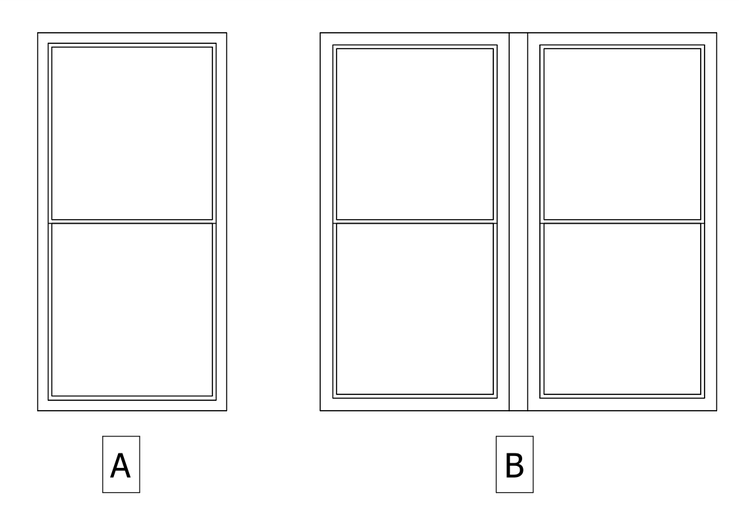


NOTE: (2) 2X6 FRT STUDS PROVIDED BETWEEN GROUP WINDOWS. (TYPICAL) PROVIDE 4" LIMITATION FOR WINDOW LIMITERS ON ALL WINDOWS

**LIGHT FIXTURE LEGEND**

| | |
|---|---|
| U1 | LITHONIA FMSATL-16-20840-BN; SEMI FLUSH MOUNT |
| U2 | LITHONIA FMFL-30840-SATL-BN; LINEAR FLUSH MOUNT |
| U3 | LITHONIA DFMADRL-14-F01; FMPANL-14-20840M6; LED SURFACE MOUNT DRUM |
| U4 | SATCO COVER PLATE |
| U5 | PROGRESS P300187-009-30; LED BATH VANITY |
| U6 | LITHONIA FMMUSL-9-14840-WH; LED CLOSET MUSHROOM |
| U7 | LITHONIA MDPC-BNP-M6; DGDT 1003 M6 |
| U8 | COOPER SMD6R-12-930-WH; 1200 LUMEN SLIM SURFACE (120 VOLT ONLY) |
| U9 | NUVO 62-1161; 7" LED FLUSH MOUNT DISCK |
| U10 | LITHONIA OLWPLED-P1-40K-120-PE-BZ; LED MINI WALL PACK |

**UNIT PLAN AND INTERIOR ELEVATION KEYNOTES**

| Number | Description |
|---|---|
| 1 | WASHER |
| 2 | DRYER |
| 3 | RANGE / OVEN |
| 4 | REFRIGERATOR |
| 5 | DISHWASHER |
| 6 | KITCHEN SINK / FAUCET |
| 7 | TOILET |
| 8 | VANITY - SEE ELEVATION FOR SIZE |
| 9 | 30"X60" TUB |
| 10 | 36"X60" SHOWER BASE |
| 11 | 32"X60" SHOWER BASE |
| 12 | ACCESSIBLE THRESHOLD - MARBLE |
| 13 | ACCESSIBLE THRESHOLD - ALUMINIUM |
| 14 | SOFFIT OVER REFRIGERATOR AND BEHIND CABINET |
| 15 | LINEN SHELVES (5) PER SPECIFICATION |
| 16 | WIRE SHEVLING |
| 17 | KNEE WALL BELOW COUNTERTOP |
| 18 | BALCONY RAILING @ 42" HIGH |
| 19 | WALL MOUNTED HOT WATER HEATER |
| 20 | HVAC UNIT MOUNTED ON WALL |
| 21 | PRE ROCK BEHIND BATHING FIXTURES |
| 22 | CUBBIE CABINETS |
| 23 | MICROWAVE WITH RECIRCULATION HOOD |
| 24 | WALL TILE BETWEEN CONTERTOP AND WALL CABINET. SEE 1D DRAWING |
| 25 | BLOCKING FOR GRAB BAR. SEE FIG. 4- SHEET A0.06 |
| 26 | 24" HORIZONTAL GRAB BAR @ TUB BACK WALL. SEE FIG. 4 - SHEET A0.06 |
| 27 | SHOWER ROD |
| 28 | NOT USED |
| 29 | PAINTED FRAME MIRROR |
| 30 | TOILET TISSUE HOLDER @ 26" A.F.F. |
| 31 | 30" TOWEL BAR |
| 32 | ROBE HOOK |
| 33 | SHOWER HEAD |
| 34 | VANITY SINK BOWL |

**NOTES:**

1. SEE SPECIFICATIONS FOR ADDITIONAL INFORMATION.
2. ALL DOOR HARDWARE TO BE COMPLIANT WITH THE FEDERAL FAIR HOUSING ACT (FHA).
3. DOORS SHALL BE OPENABLE WITH NO MORE THAN ONE RELEASING OPERATION.
4. PROVIDE ACCESSIBLE THRESHOLDS AT ALL DOORS.
5. ALL UNITS ARE ADAPTABLE PER FHA. SEE SHEET A0.06 FOR ADDITIONAL INFORMATION.
6. ALL DIMENSIONS ARE TO ROUGH FRAMING U.N.O.
7. ALL WALLS ARE 2X4 STUDS UNLESS NOTED OTHERWISE.
8. ALL TENANT SEPERATIONS AND CORRIDOR WALLS ARE 2X6 UNLESS NOTED OTHERWISE.
9. PATIO AT FIRST FLOOR 4" BELOW UNIT FINISH FLOOR.
10. BALCONIES ARE FLUSH WITH GYPCRETE TOPPING. SEE DETAIL.
11. ALL TOILETS SET ON NEOPRENE GASKET WITH INSULATED PIPE TRAP.
12. ALL KITCHEN APPLIANCES TO HAVE STAINLESS STEEL FRONTS.
13. WHERE DRAWINGS ARE IN CONFLICT WITH OTHER DRAWINGS, CONTRACTOR SHALL NOTIFY THE ARCHITECT.
14. PROVIDE BLOCKING FOR GRAB BARS IN ALL BATHROOMS
15. DIMENSION TO STUD UNLESS OTHERWISE NOTED
16. DIMESNION TO FINISH @ CABINETS
17. PROVIDE BLOCKING FOR TV WALL MOUNT, CENTER AT 60" A.F.F.
18. ALL BATHROOM VANITES ARE 21" IN DEPTH

**ROOM FINISH MATERIAL CODE**

| | |
|---|---|
| CPT | CARPET |
| CT | CERAMIC TILE |
| CONC | CONCRETE |
| GWB | GYPSUM WALL BOARD |
| MR GWB | MOISTURE RESISTANT GWB |
| V | SHEET VINYL |
| VWP | VINYL WOOD PLANK |
| VCT | VINYL COMPOSITE TILE |
| WD | WOOD |

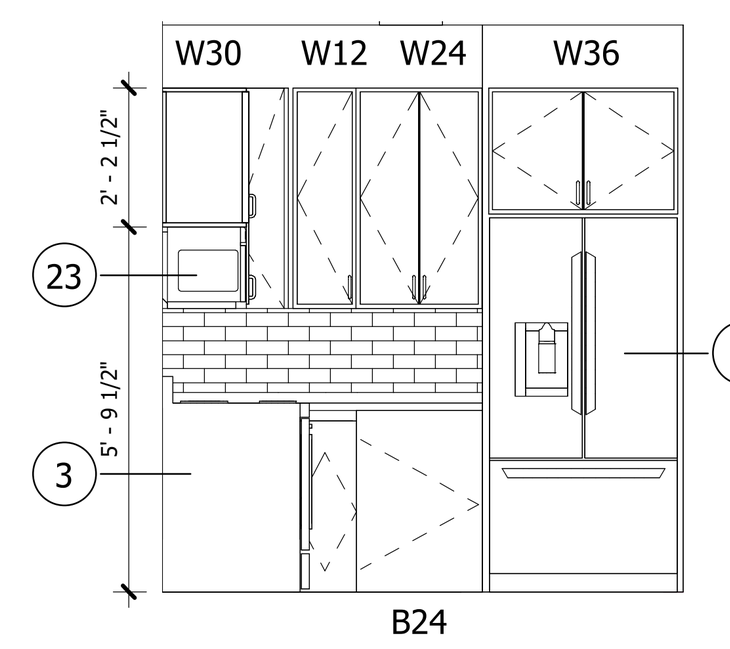


9 **UNIT B4 - KITCHEN - ELEV 1**
SCALE : 1/4" = 1'-0"

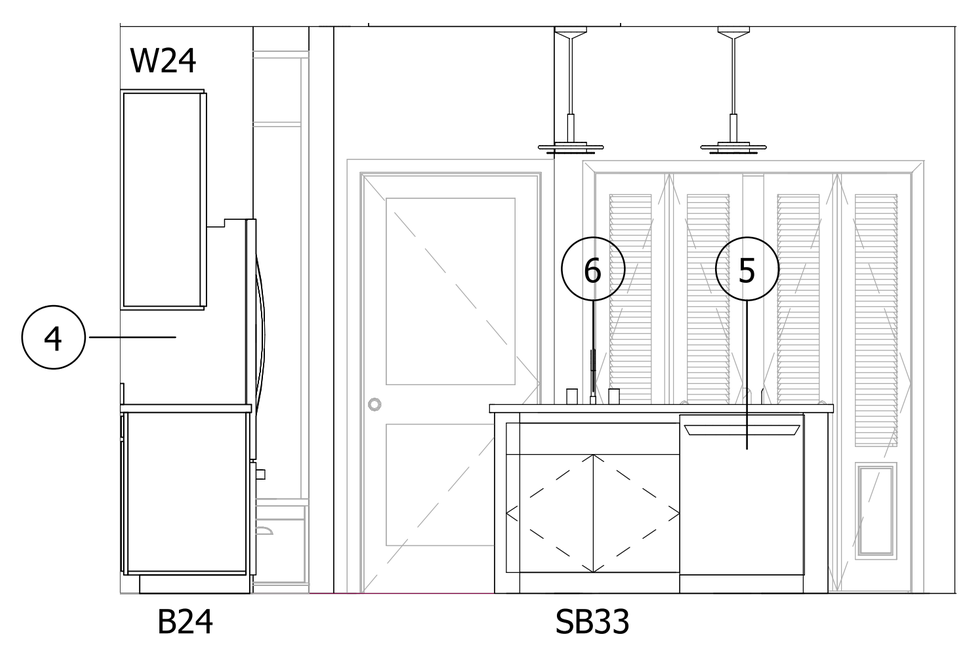


10 **UNIT B4 - KITCHEN - ELEV 2**
SCALE : 1/4" = 1'-0"

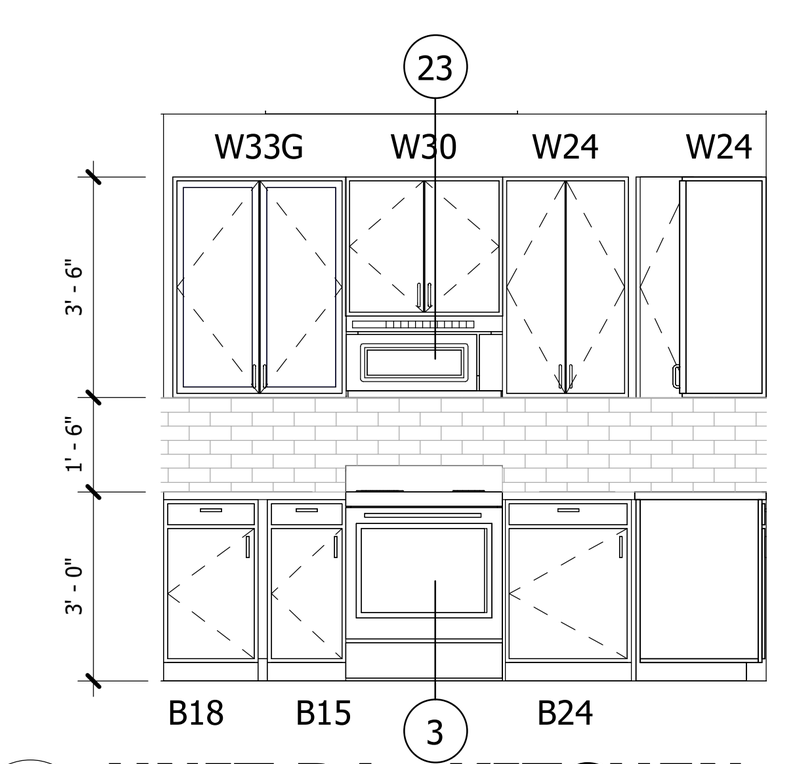


11 **UNIT B4 - KITCHEN - ELEV 3**
SCALE : 1/4" = 1'-0"

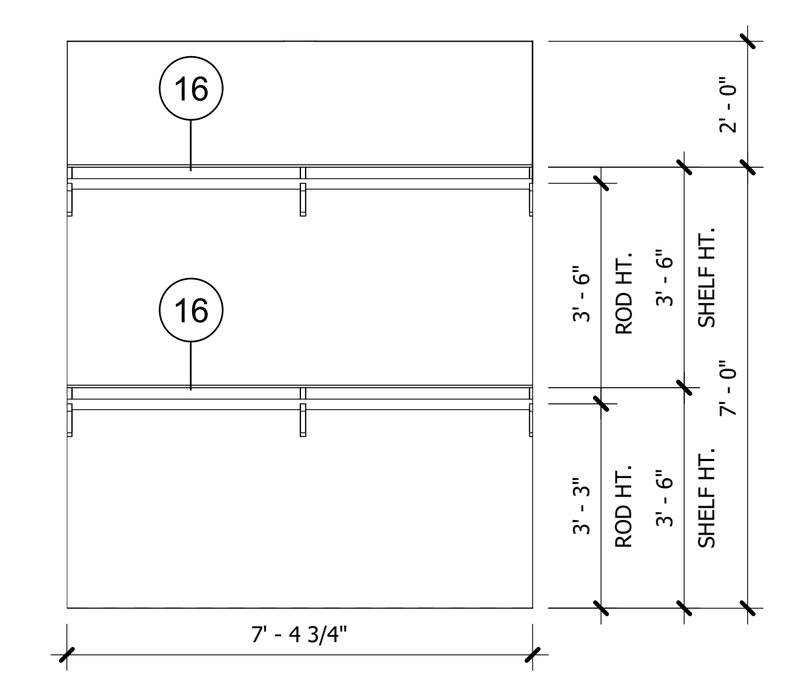


14 **UNIT B4 - CLOSET 1 - ELEV 1**
SCALE : 1/4" = 1'-0"

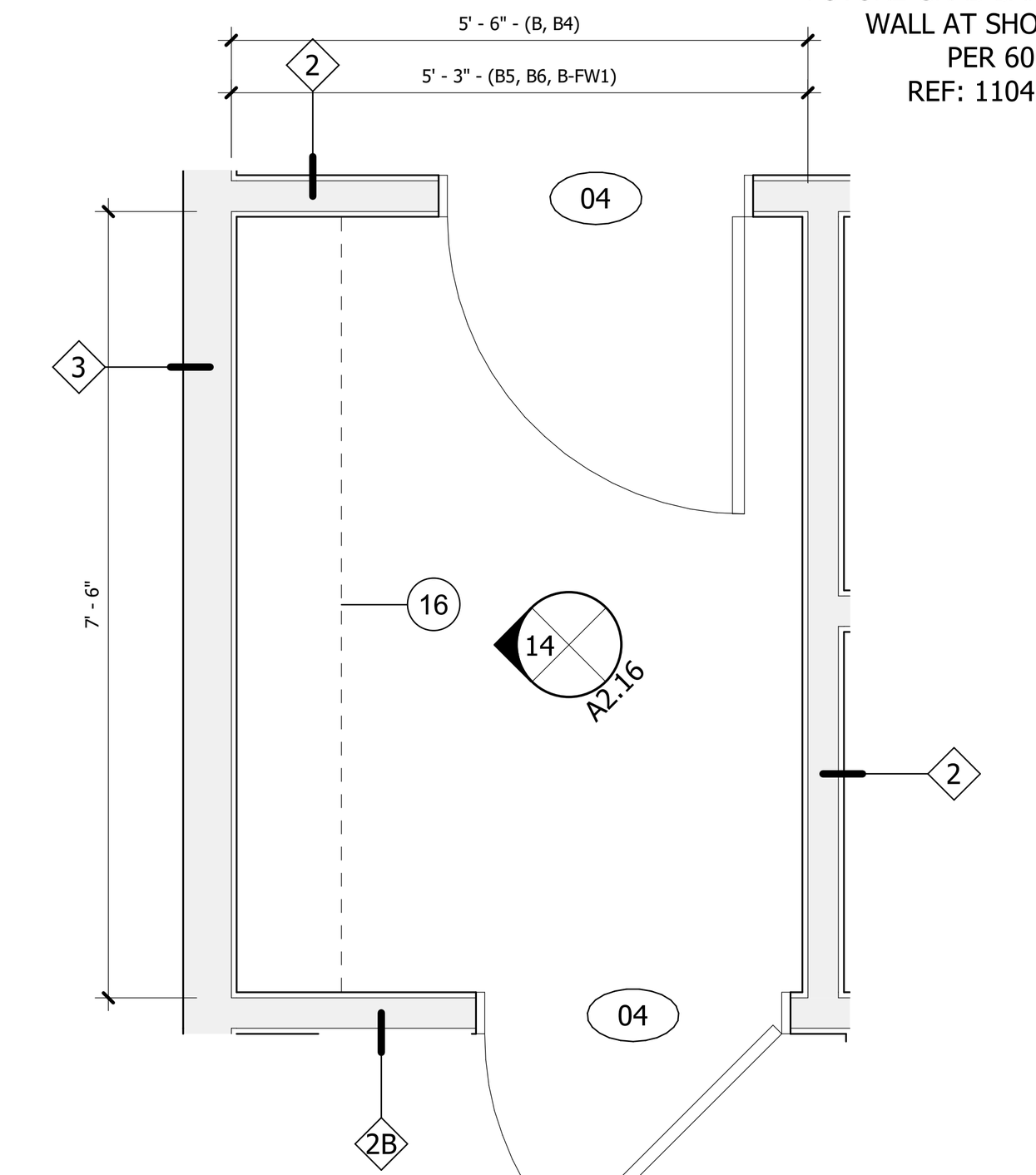


7 **UNIT B4 - CLOSET 1 - PLAN**
SCALE : 1/2" = 1'-0"

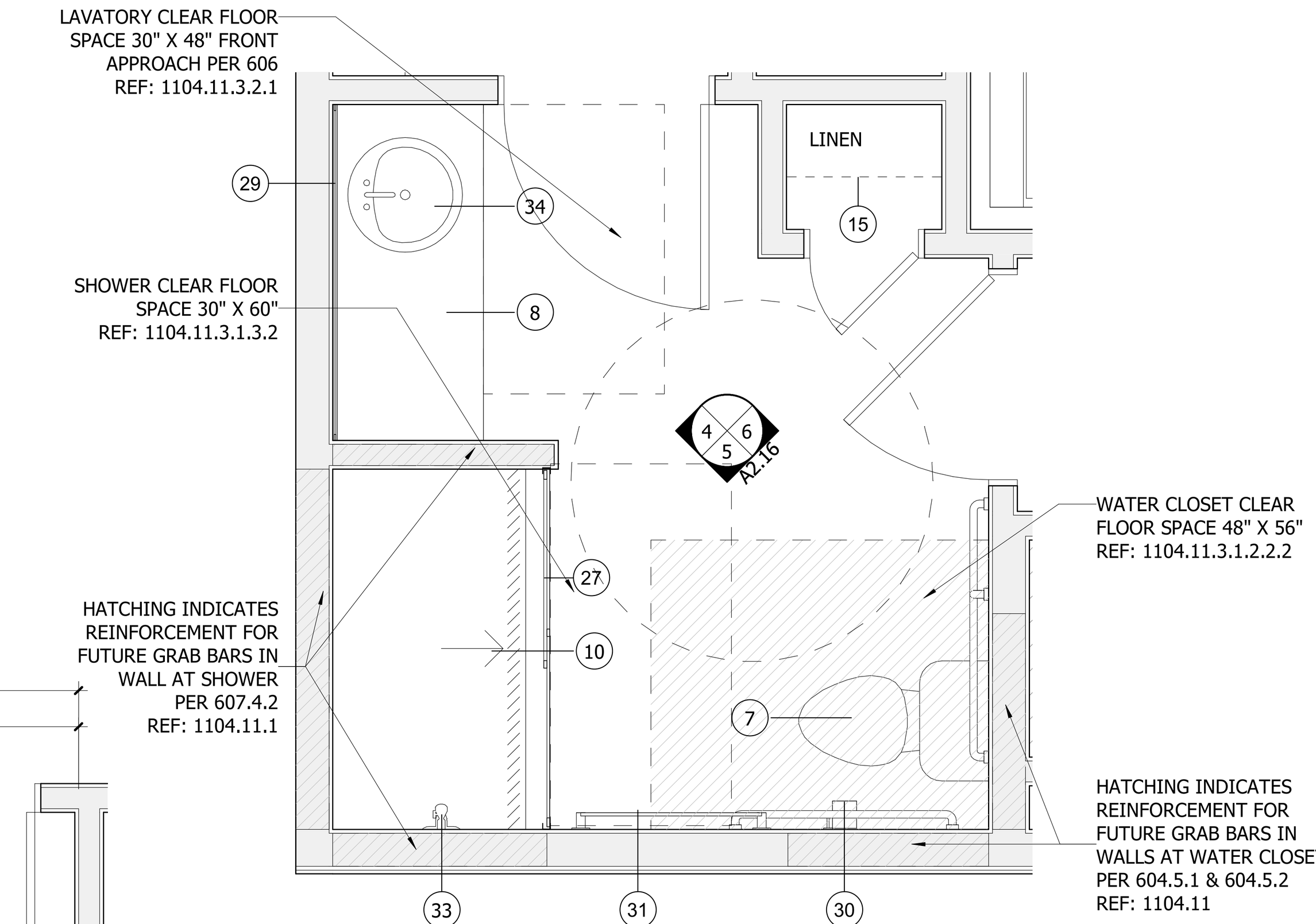


3 **UNIT B4 - BATHROOM - PLAN**
SCALE : 1/2" = 1'-0"

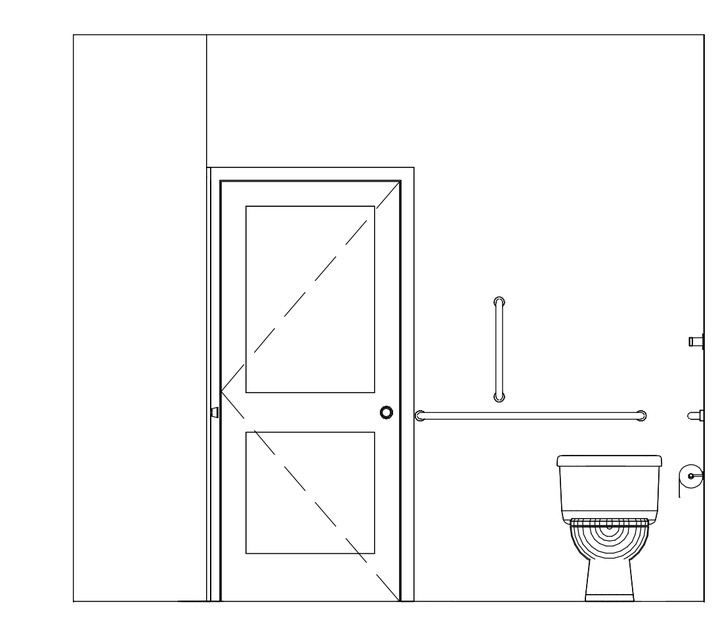

6 **UNIT B4 - BATHROOM - ELEV 3**
SCALE : 1/4" = 1'-0"

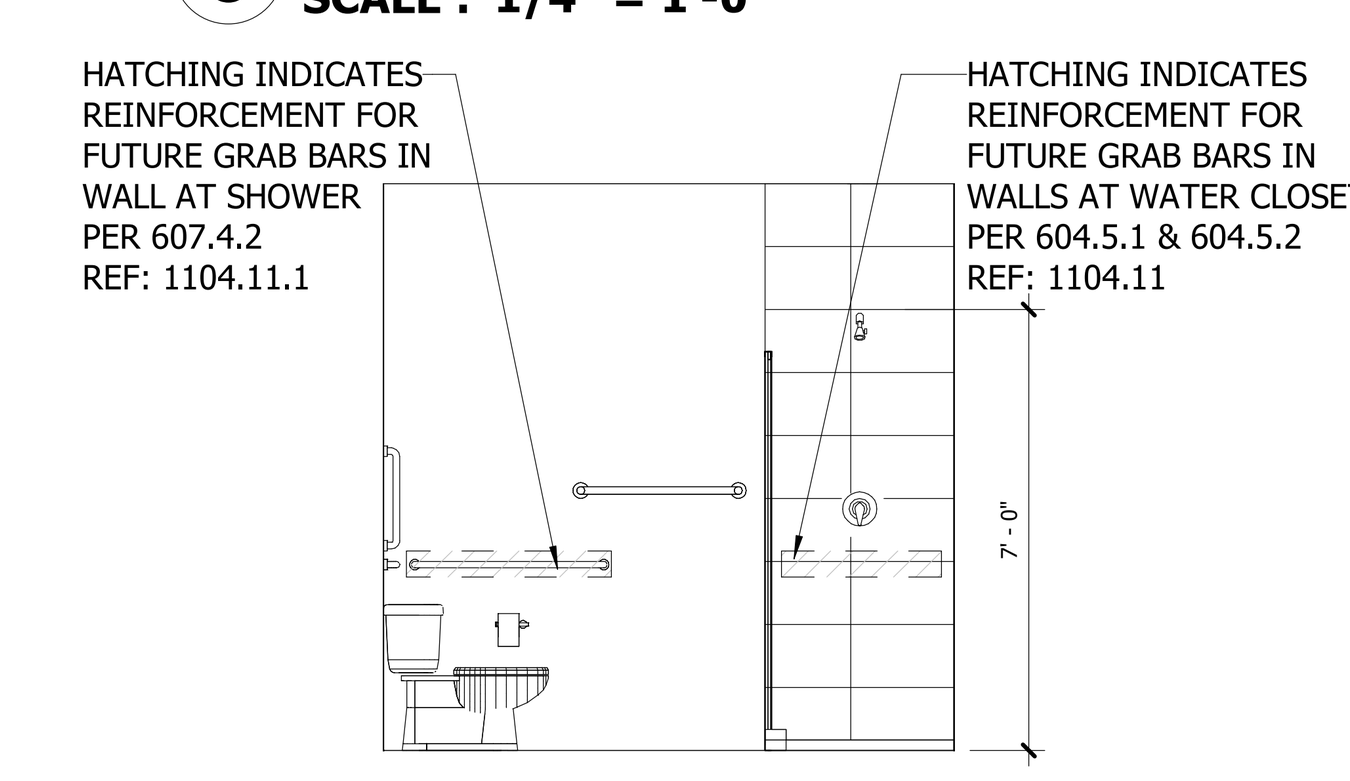


5 **UNIT B4 - BATHROOM - ELEV 2**
SCALE : 1/4" = 1'-0"

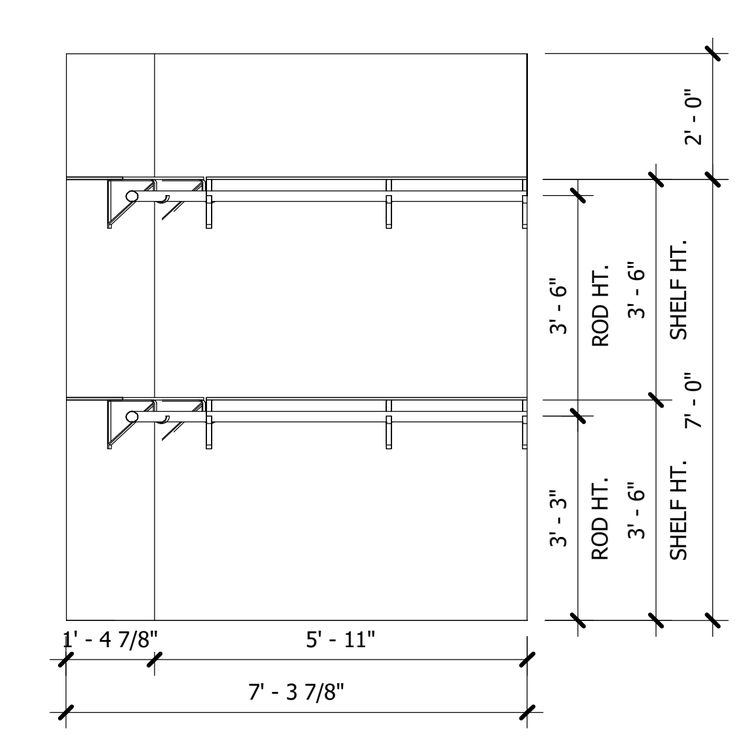


13 **UNIT B4 - CLOSET 2 - ELEV 2**
SCALE : 1/4" = 1'-0"

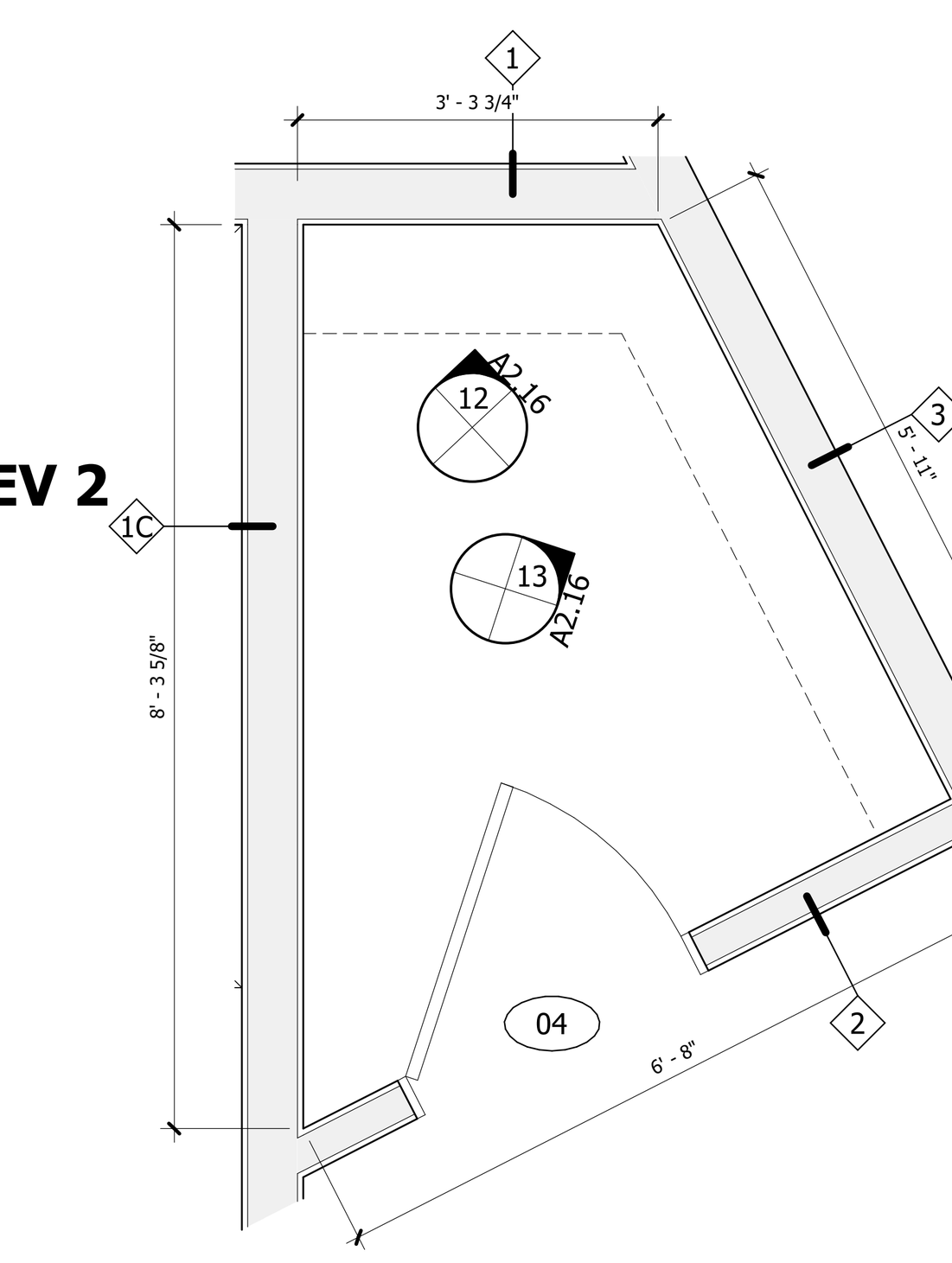


8 **UNIT B4 - CLOSET 2 - PLAN**
SCALE : 1/2" = 1'-0"

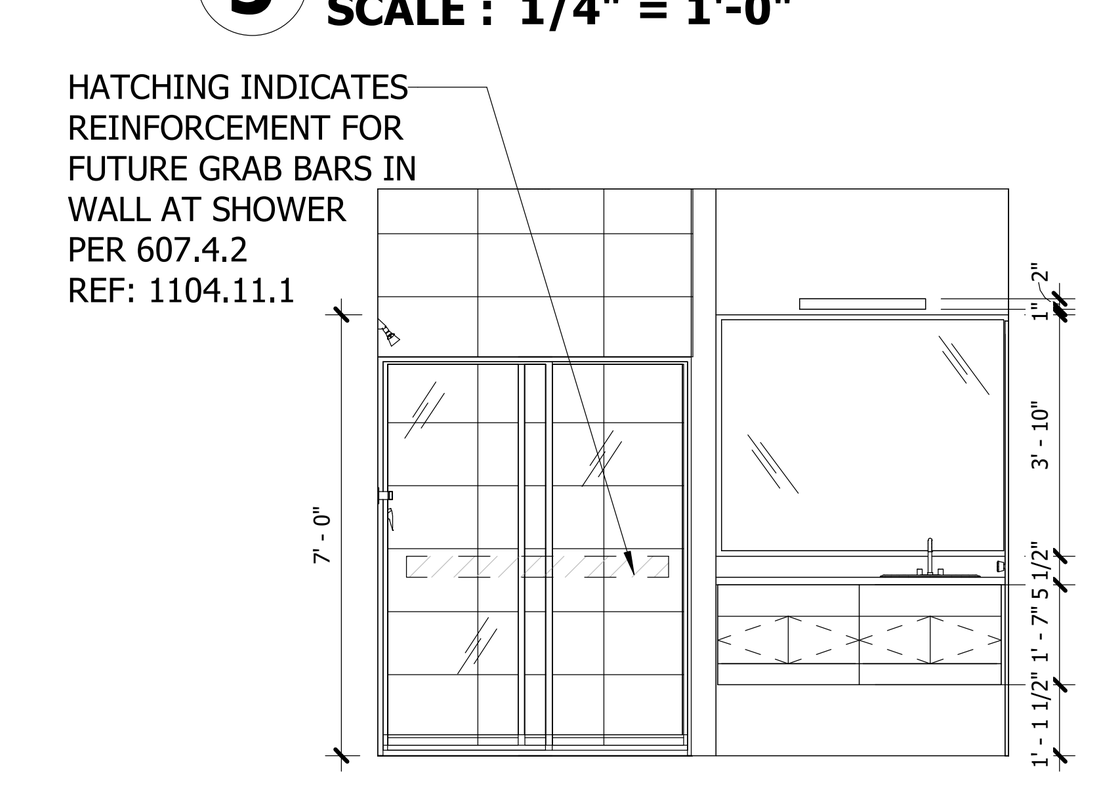


4 **UNIT B4 - BATHROOM - ELEV 1**
SCALE : 1/4" = 1'-0"

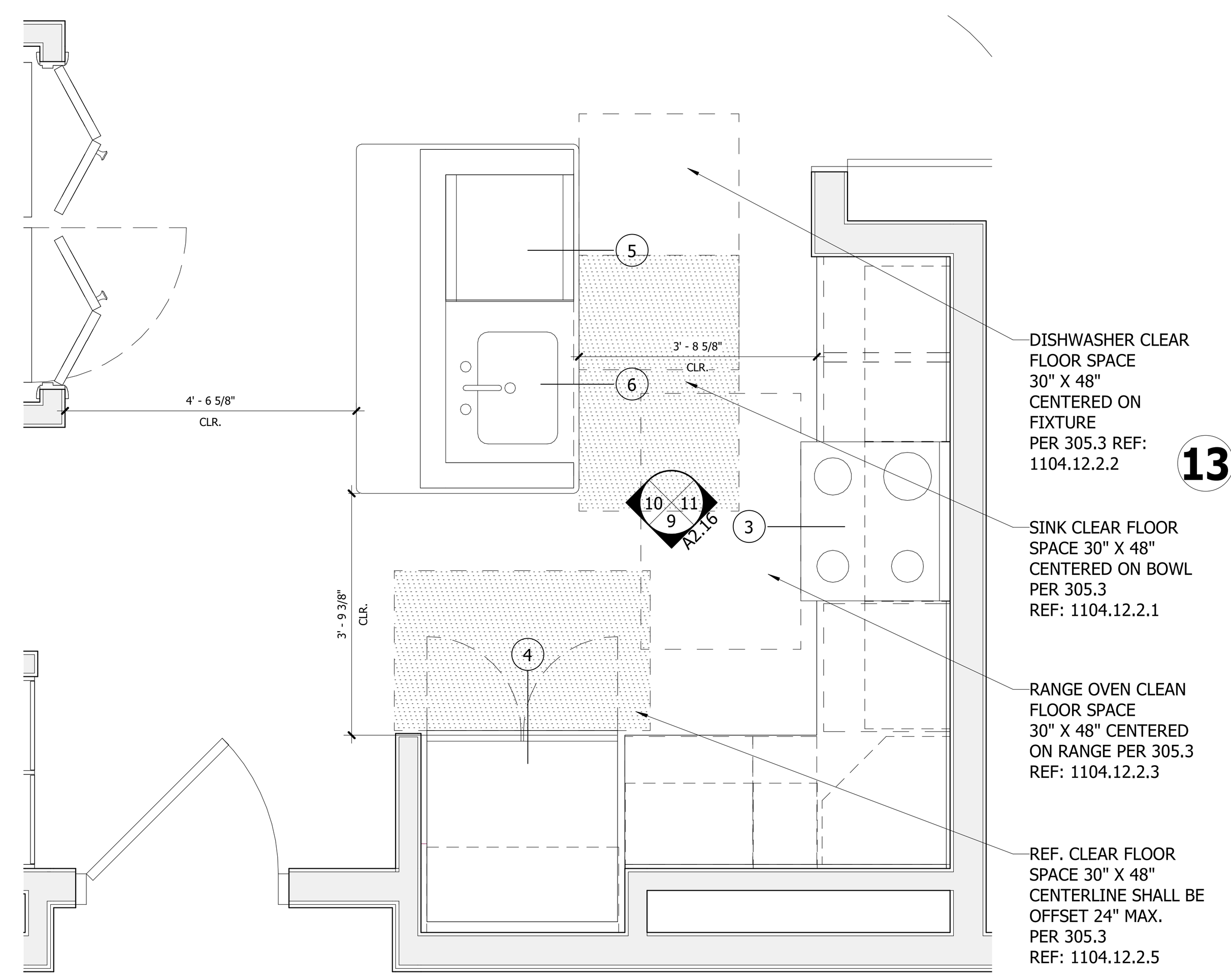


2 **UNIT B4 - KITCHEN - PLAN**
SCALE : 1/2" = 1'-0"

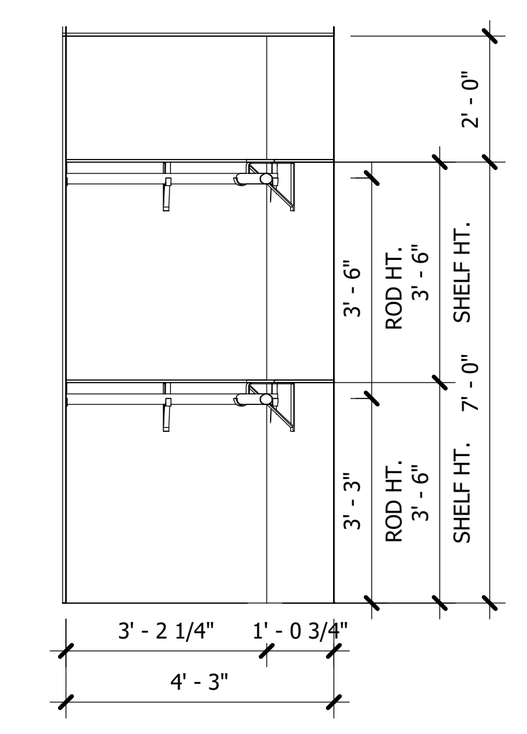


12 **UNIT B4 - CLOSET 2 - ELEV 1**
SCALE : 1/4" = 1'-0"

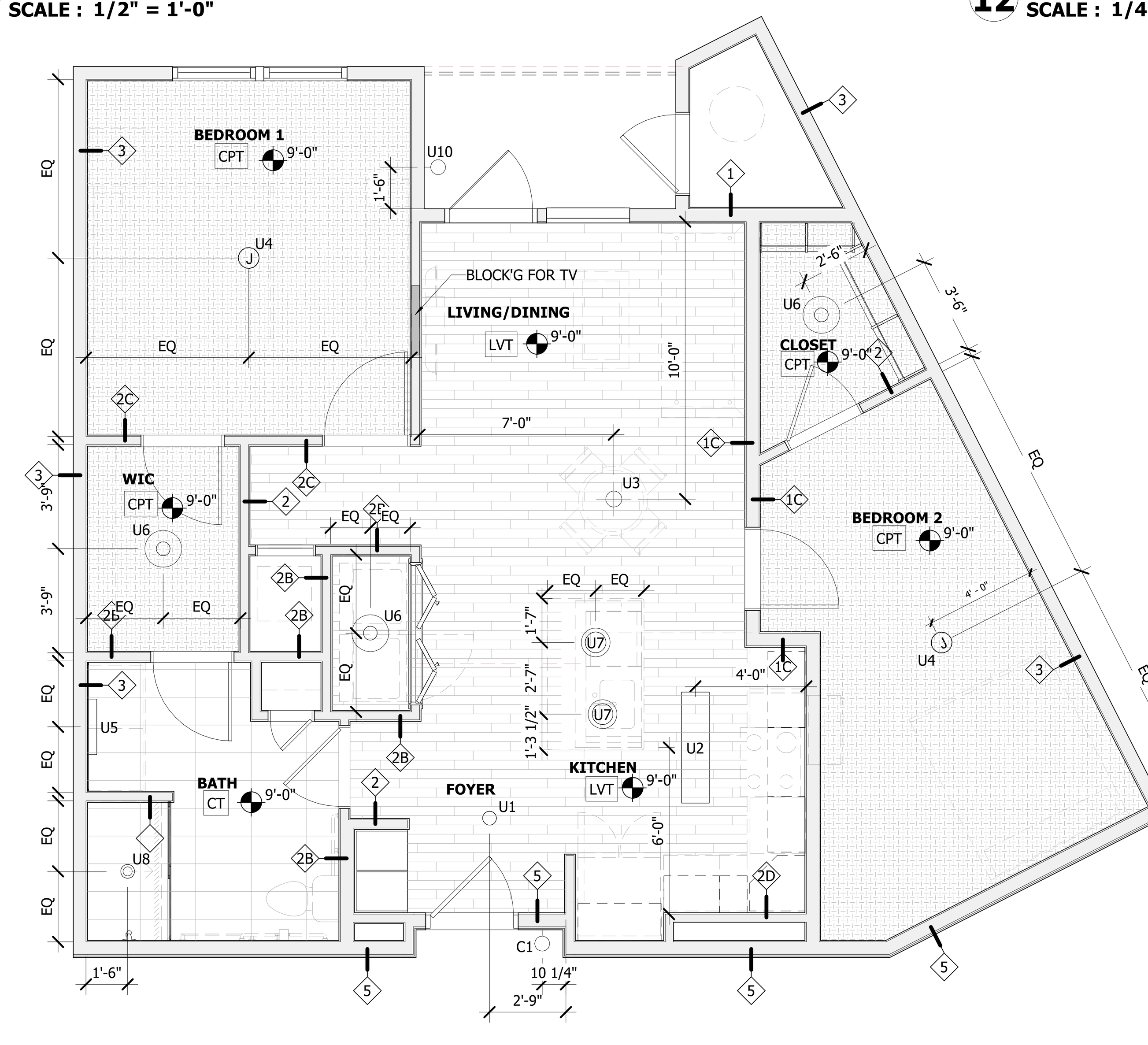


1A **UNIT B4 RCP**
SCALE : 1/4" = 1'-0"

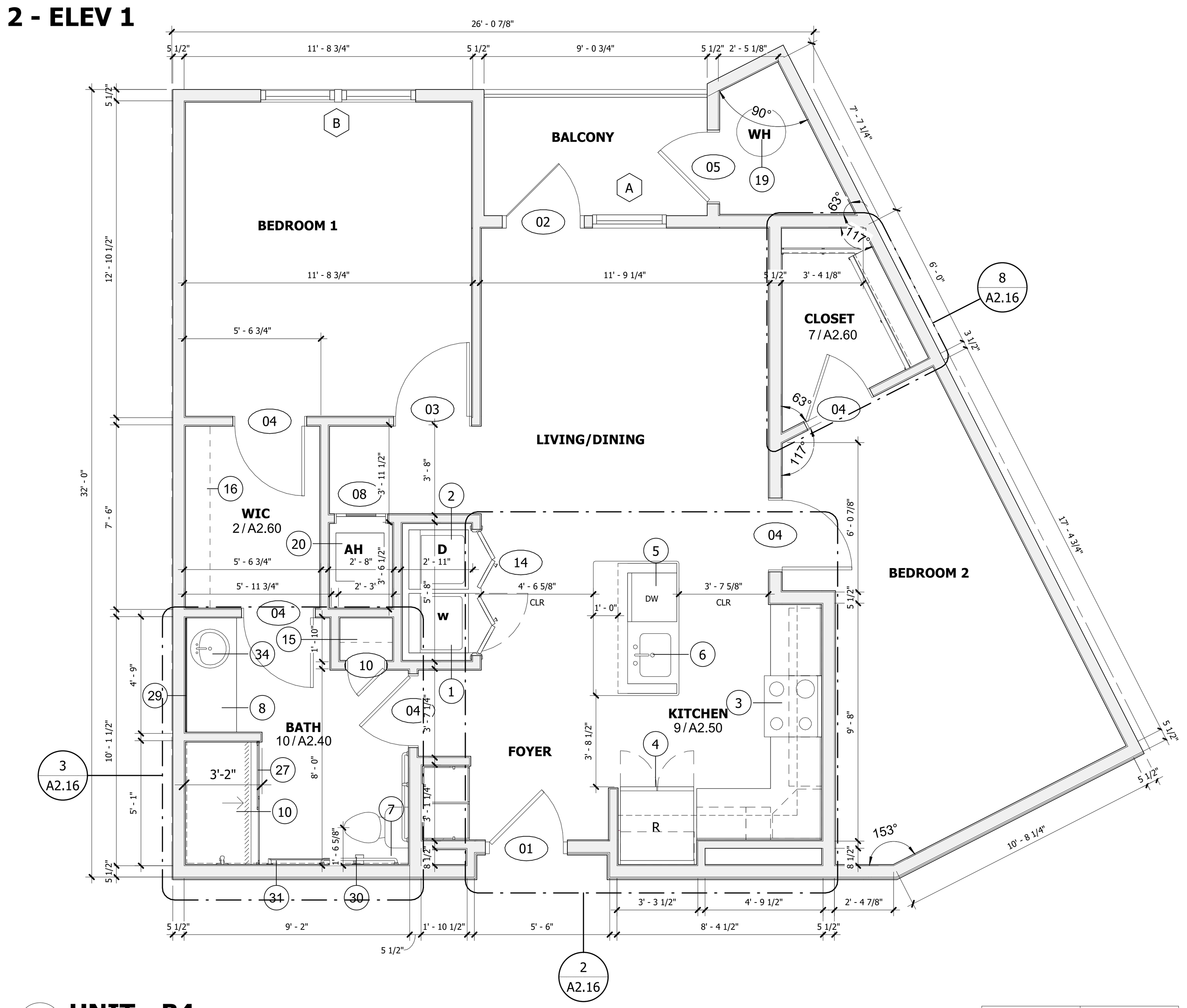


| ROOM # |
|---|
| UNIT B4 |
| 123 |
| 223 |
| 323 |
| 423 |
| Grand total: 4 |

| | |
|---|---|
| Unit-B4 | 1,010 SF |

1 **UNIT - B4**
SCALE : 1/4" = 1'-0"

ALL REPORTS, PLANS, SPECIFICATIONS AND COMPUTER FILES RELATING TO THIS PROJECT ARE THE PROPERTY OF THE MARTIN ARCHITECTURAL GROUP. THE MARTIN ARCHITECTURAL GROUP RETAINS ALL COMMON LAW, STATUTE AND OTHER RESERVED RIGHTS INCLUDING THE COPY-RIGHT THERETO. REPRODUCTION OF THE MATERIAL HEREIN OR SUBSTANTIAL USE WITHOUT WRITTEN PERMISSION OF THE MARTIN ARCHITECTURAL GROUP VIOLATES THE COPYRIGHT LAWS OF THE UNITED STATES AND WILL BE SUBJECT TO LEGAL PROSECUTION.
©2022, The Martin Architectural Group, P.C.

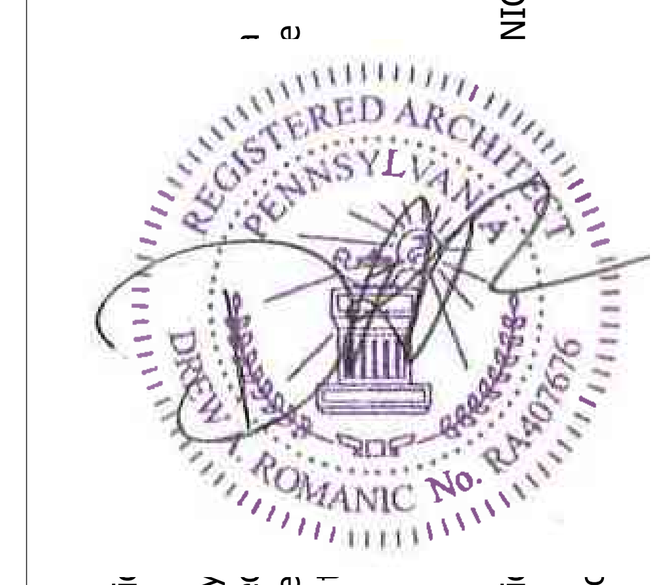

**THE MARTIN ARCHITECTURAL GROUP, P.C.**
ARCHITECTS AND LAND PLANNERS
A PROFESSIONAL CORPORATION
240 NORTH 22ND STREET, PHILADELPHIA, PA 19103
P (215) 665-1080 F (215) 561-5064

| | |
|---|---|
| P.A.: | DREW ROMANIC |
| P.M.: | JASON DECAMPLI |
| DRAWN BY: | Author |
| PROJECT NO: | 1362-12 |

| NO. | REVISION | DATE |
|---|---|---|
| 1 | PERMIT SET | 12/20/22 |

# UNIT PLANS (UNIT B4)
**Granite Run Apartment 02**
MIDDLETOWN TOWNSHIP, PA

| | |
|---|---|
| SCALE: | |
| DATE: | 09/09/22 |

**A2.16**

©2022, The Martin Architectural Group, P.C.

Printed: 1/13/2023 4:29:46 PM

| DOOR SCHEDULE - DWELLING UNIT | | | | | | | | |
|---|---|---|---|---|---|---|---|---|
| MARK | DOOR TYPE | WIDTH | HEIGHT | DOOR MATERIAL | FRAME TYPE | FRAME MATERIAL | FIRE RATING | REMARKS |
| 01 | UA | 3'-0" | 7'-0" | MTL | F1 | MTL | 20 min. | UNIT ENTRY - SPRING HINGES |
| 02 | UE | 3'-0" | 7'-0" | VY | F1 | VY | | BALCONY DOOR |
| 03 | UB | 3'-0" | 6'-8" | MTE | F1 | WD | | |
| 04 | UB | 2'-10" | 6'-8" | MTE | F1 | WD | | |
| 05 | UA | 2'-10" | 6'-8" | EM | F1 | MTL | | UNIT EXT. MECH DOOR |
| 06 | UB | 2'-6" | 6'-8" | MTE | F1 | WD | | |
| 07 | UB | 2'-0" | 6'-8" | MTE | F1 | WD | | |
| 08 | UC | 2'-0" | 6'-8" | MTE | F1 | WD | | LOUVERED AIR HANDLER |
| 09 | UC | 1'-6" | 6'-8" | MTE | F1 | WD | | LOUVERED AIR HANDLER |
| 10 | UB | 1'-6" | 6'-8" | MTE | F1 | WD | | |
| 11 | UB | 1'-4" | 6'-8" | MTE | F1 | WD | | |
| 12 | UDD | 4'-0" | 6'-8" | MTE | | WD | | SLIDING BARN DOOR |
| 13 | UBB | 5'-0" | 6'-8" | MTE | F2 | WD | | DOUBLE SWING DOOR |
| 14 | UCC | 5'-0" | 6'-8" | MTE | F2 | WD | | LOUVERED BI-FOLD |
| 15 | UCC | 6'-0" | 6'-8" | MTE | F2 | WD | | LOUVERED BI-FOLD |
| 19 | UB | 1'-9" | 6'-8" | MTE | F1 | WD | | |
| E | | 3'-0" | 7'-0" | | | | | |
| EE | | 6'-0" | 7'-0" | | | | | |
| F | | 6'-0" | 7'-0" | | | | | *RATED GLASS |

## ROOM FINISH SCHEDULE

| SPACE | FLOOR | WALL | CEILING | HEIGHT | REMARKS |
|---|---|---|---|---|---|
| KITCHEN | 3 | A | 1 | 9'-0" | |
| LIVING RM. | 3 | A | 1 | 9'-0" | |
| BEDROOMS | 1 | A | 1 | 9'-0" | |
| DEN | 3 | A | 1 | 9'-0" | |
| BATHS | 4 | B/C | 2 | 9'-0" | |
| CLOSETS | | A | 1 | 9'-0" | FLOORING: MATCH ADJ. |
| LAUNDRY | 3 | A | 2 | 9'-0" | FLOORING: MATCH ADJ. |
| UNIT-HVAC | | A | 1 | 9'-0" | FL.: GYPCRETE PAINT-LIGHT GRAY |

### MATERIAL CODE

| FLR. / BASE | | WALL | | CEILING | |
|---|---|---|---|---|---|
| 1 | CPT / WD | A | G.W.B. | 1 | G.W.B. |
| 2 | | B | MR.G.W.B. | 2 | MR.G.W.B. |
| 3 | LVT / WD | C | CT-2 | 3 | |
| 4 | CT / CT | D | | 4 | |
| 5 | | E | | 5 | |
| 6 | | F | | 6 | |
| 7 | | G | | 7 | |
| 8 | | H | | 8 | |

MATERIAL GLOSSARY

| | |
|---|---|
| CPT | CARPET - SHAW GULF WINDS - COLOR: 532 MINERAL |
| CT-1 | CERAMIC TILE - 12X24 FLORIM MATERIA - COLOR: HONED 02 |
| CT-2 | CERAMIC TILE - 12X24 FLORIM MATERIA - COLOR: STONE CALACATTA |
| G.W.B. | GYPSUM WALL BOARD |
| MR.G.W.B. | MOISTURE RESISTANT G.W.B. |
| LVT | VINYL WOOD PLANK - SHAW TERRAIN 12 MIL - COLOR: 766 ECHO |
| WD. | WOOD |

## UNIT DOOR TYPES

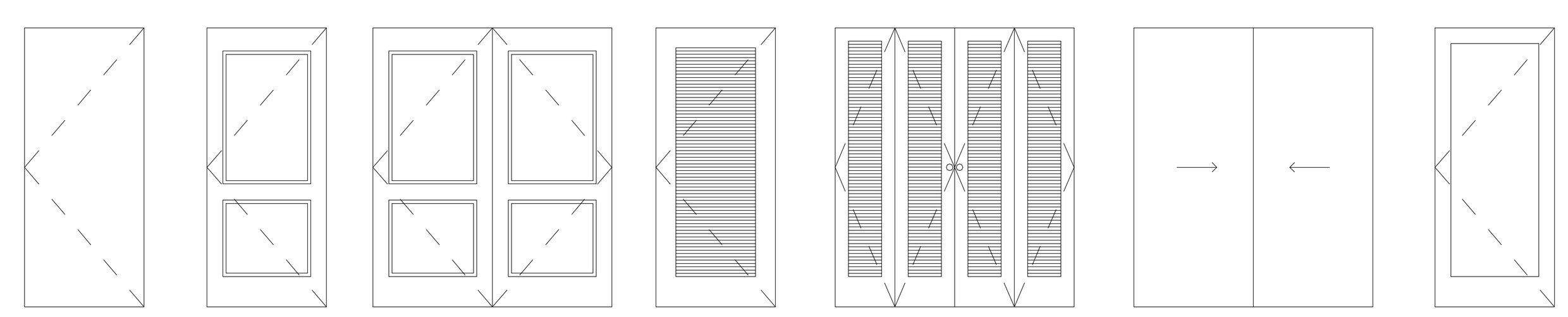

UA (HINGE) UB (HINGE) UBB (HINGE) UC UCC (BI-FOLD) UDD (SLIDING) UE (GLASS)

## FRAME TYPES

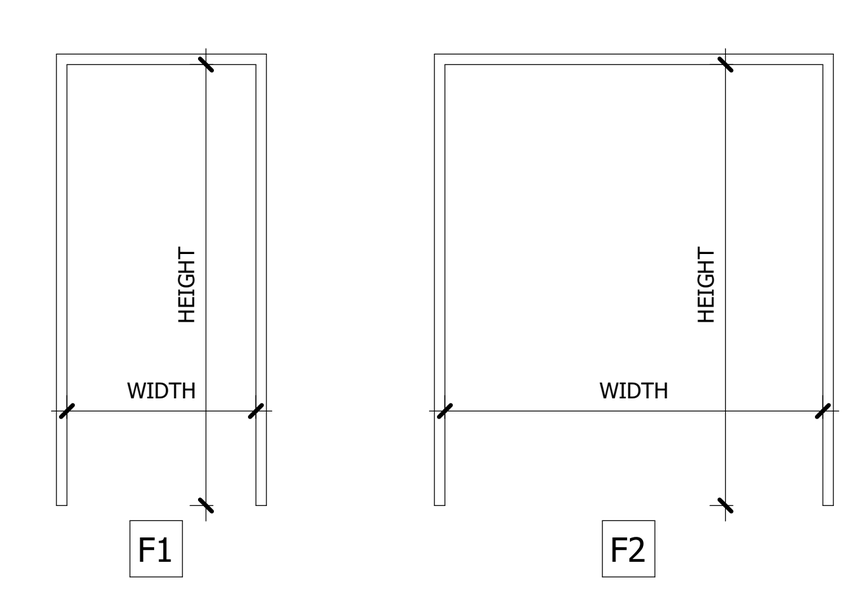


**DOOR/FRAME MATERIAL KEY:**

| | |
|---|---|
| AL | ALUMINUM |
| EM | EXTERIOR METAL |
| GL | GLASS |
| HC | HOLLOW CORE |
| HM | HOLLOW METAL |
| MTL | METAL |
| SC | SOLID CORE |
| SR | STILE & RAIL |
| VY | VINYL |
| WD | WOOD |
| MTE | MASONITE |

| WINDOW SCHEDULE | | | | | |
|---|---|---|---|---|---|
| MARK | WIDTH | HEIGHT | WINDOW TYPE | CONSTRUCTION TYPE | COMMENTS |
| A | 3'-0" | 6'-0" | SINGLE HUNG | VINYL | All windows to be provided with opening limiters. See specifications. |
| B | 6'-3 1/2" | 6'-0" | SINGLE HUNG | VINYL | All windows to be provided with opening limiters. See specifications. |

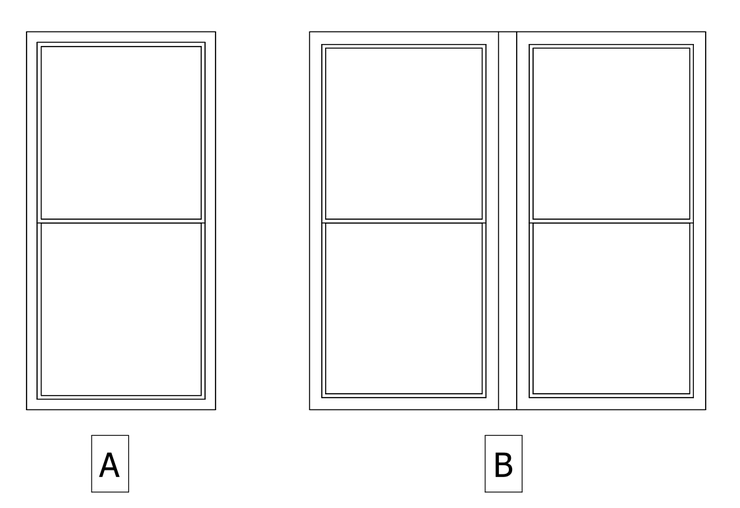

A B

NOTE: (2) 2X6 FRT STUDS PROVIDED BETWEEN GROUP WINDOWS. (TYPICAL) PROVIDE 4" LIMITATION FOR WINDOW LIMITERS ON ALL WINDOWS

| LIGHT FIXTURE LEGEND | |
|---|---|
| U1 | LITHONIA FMSATL-16-20840-BN; SEMI FLUSH MOUNT |
| U2 | LITHONIA FMFL-30840-SATL-BN; LINEAR FLUSH MOUNT |
| U3 | LITHONIA DFMADRL-14-F01; FMPANL-14-20840M6; LED SURFACE MOUNT DRUM |
| U4 | SATCO COVER PLATE |
| U5 | PROGRESS P300187-009-30; LED BATH VANITY |
| U6 | LITHONIA FMMUSL-9-14840-WH; LED CLOSET MUSHROOM |
| U7 | LITHONIA MDPC-BNP-M6; DGDT 1003 M6 |
| U8 | COOPER SMD6R-12-930-WH; 1200 LUMEN SLIM SURFACE (120 VOLT ONLY) |
| U9 | NUVO 62-1161; 7" LED FLUSH MOUNT DISCK |
| U10 | LITHONIA OLWPLED-P1-40K-120-PE-BZ; LED MINI WALL PACK |

| UNIT PLAN AND INTERIOR ELEVATION KEYNOTES | |
|---|---|
| Number | Description |
| 1 | WASHER |
| 2 | DRYER |
| 3 | RANGE / OVEN |
| 4 | REFRIGERATOR |
| 5 | DISHWASHER |
| 6 | KITCHEN SINK / FAUCET |
| 7 | TOILET |
| 8 | VANITY - SEE ELEVATION FOR SIZE |
| 9 | 30"X60" TUB |
| 10 | 36"X60" SHOWER BASE |
| 11 | 32"X60" SHOWER BASE |
| 12 | ACCESSIBLE THRESHOLD - MARBLE |
| 13 | ACCESSIBLE THRESHOLD - ALUMINIUM |
| 14 | SOFFIT OVER REFRIGERATOR AND BEHIND CABINET |
| 15 | LINEN SHELVES (5) PER SPECIFICATION |
| 16 | WIRE SHEVLING |
| 17 | KNEE WALL BELOW COUNTERTOP |
| 18 | BALCONY RAILING @ 42" HIGH |
| 19 | WALL MOUNTED HOT WATER HEATER |
| 20 | HVAC UNIT MOUNTED ON WALL |
| 21 | PRE ROCK BEHIND BATHING FIXTURES |
| 22 | CUBBIE CABINETS |
| 23 | MICROWAVE WITH RECIRCULATION HOOD |
| 24 | WALL TILE BETWEEN CONTERTOP AND WALL CABINET. SEE 1D DRAWING |
| 25 | BLOCKING FOR GRAB BAR. SEE FIG. 4- SHEET A0.06 |
| 26 | 24" HORIZONTAL GRAB BAR @ TUB BACK WALL. SEE FIG. 4 - SHEET A0.06 |
| 27 | SHOWER ROD |
| 28 | NOT USED |
| 29 | PAINTED FRAME MIRROR |
| 30 | TOILET TISSUE HOLDER @ 26" A.F.F. |
| 31 | 30" TOWEL BAR |
| 32 | ROBE HOOK |
| 33 | SHOWER HEAD |
| 34 | VANITY SINK BOWL |

**NOTES:**

1. SEE SPECIFICATIONS FOR ADDITIONAL INFORMATION.
2. ALL DOOR HARDWARE TO BE COMPLIANT WITH THE FEDERAL FAIR HOUSING ACT (FHA).
3. DOORS SHALL BE OPENABLE WITH NO MORE THAN ONE RELEASING OPERATION.
4. PROVIDE ACCESSIBLE THRESHOLDS AT ALL DOORS.
5. ALL UNITS ARE ADAPTABLE PER FHA. SEE SHEET A0.06 FOR ADDITIONAL INFORMATION.
6. ALL DIMENSIONS ARE TO ROUGH FRAMING U.N.O.
7. ALL WALLS ARE 2X4 STUDS UNLESS NOTED OTHERWISE.
8. ALL TENANT SEPERATIONS AND CORRIDOR WALLS ARE 2X6 UNLESS NOTED OTHERWISE.
9. PATIO AT FIRST FLOOR 4" BELOW UNIT FINISH FLOOR.
10. BALCONIES ARE FLUSH WITH GYPCRETE TOPPING. SEE DETAIL.
11. ALL TOILETS SET ON NEOPRENE GASKET WITH INSULATED PIPE TRAP.
12. ALL KITCHEN APPLIANCES TO HAVE STAINLESS STEEL FRONTS.
13. WHERE DRAWINGS ARE IN CONFLICT WITH OTHER DRAWINGS, CONTRACTOR SHALL NOTIFY THE ARCHITECT.
14. PROVIDE BLOCKING FOR GRAB BARS IN ALL BATHROOMS
15. DIMENSION TO STUD UNLESS OTHERWISE NOTED
16. DIMESNION TO FINISH @ CABINETS
17. PROVIDE BLOCKING FOR TV WALL MOUNT, CENTER AT 60" A.F.F.
18. ALL BATHROOM VANITES ARE 21" IN DEPTH

| ROOM FINISH MATERIAL CODE | |
|---|---|
| CPT | CARPET |
| CT | CERAMIC TILE |
| CONC | CONCRETE |
| GWB | GYPSUM WALL BOARD |
| MR GWB | MOISTURE RESISTANT GWB |
| V | SHEET VINYL |
| VWP | VINYL WOOD PLANK |
| VCT | VINYL COMPOSITE TILE |
| WD | WOOD |

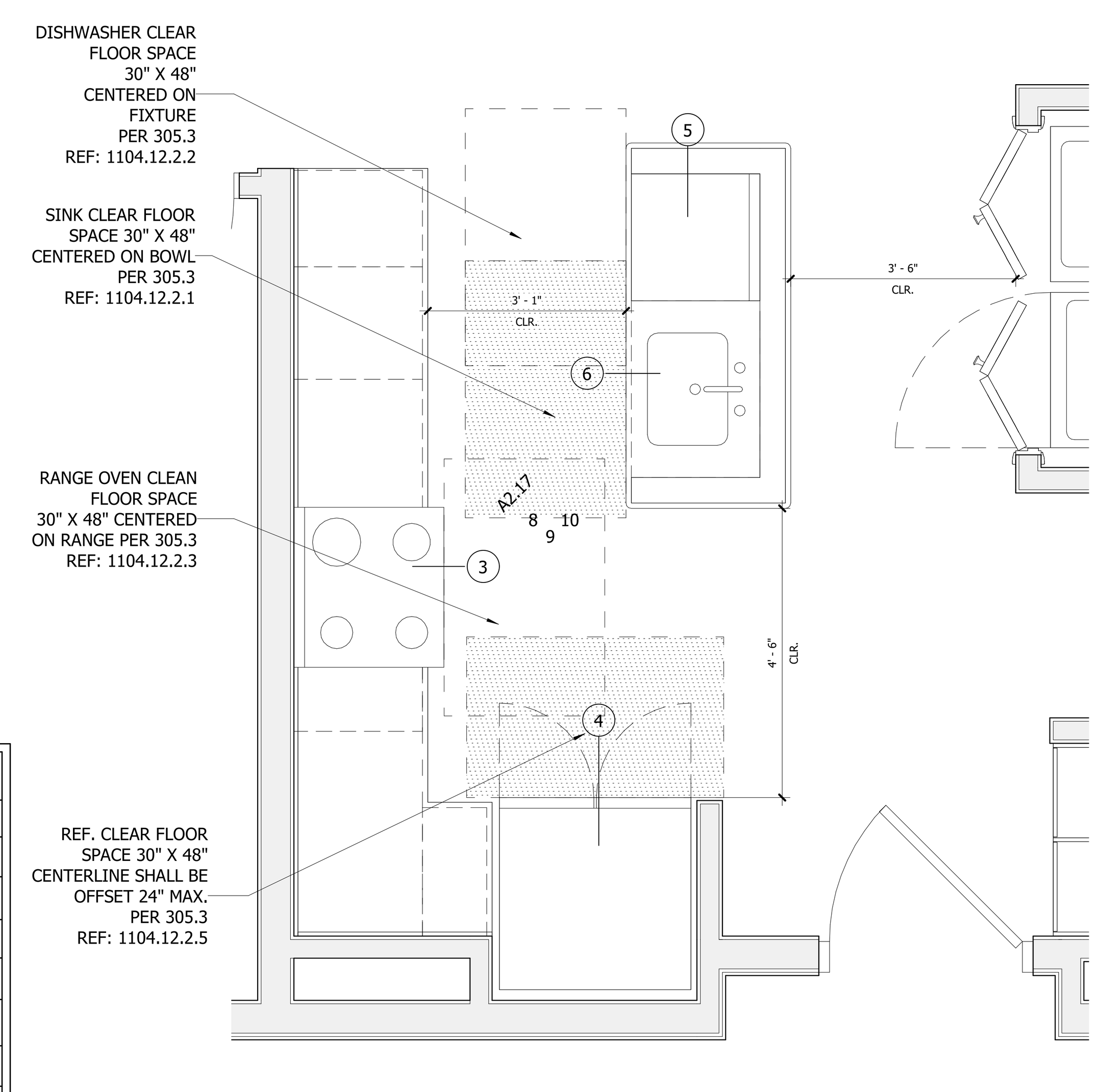


**3 UNIT B5 - KITCHEN - PLAN**
**SCALE : 1/2" = 1'-0"**

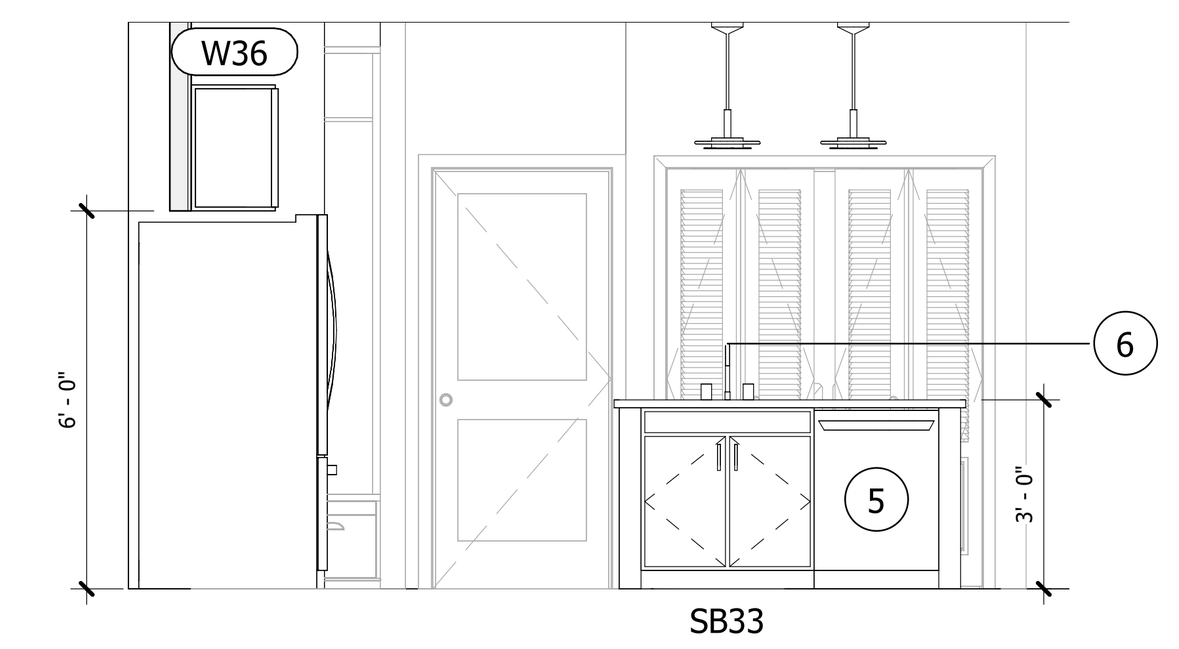


**10 UNIT B5 - KITCHEN - ELEV 3**
**SCALE : 1/4" = 1'-0"**

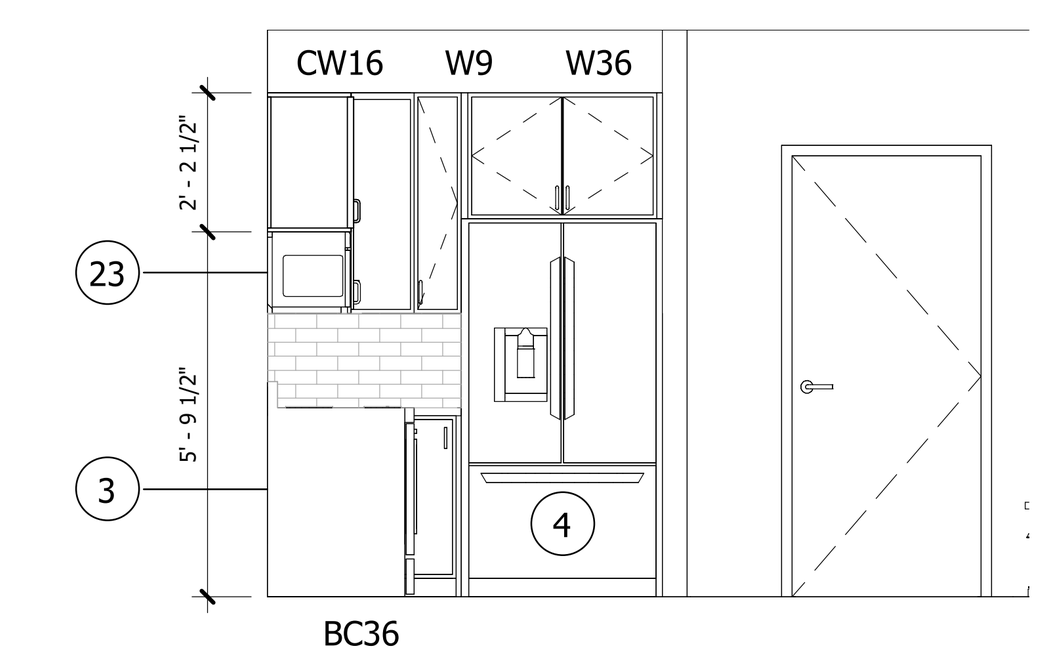


**9 UNIT B5 - KITCHEN - ELEV 2**
**SCALE : 1/4" = 1'-0"**

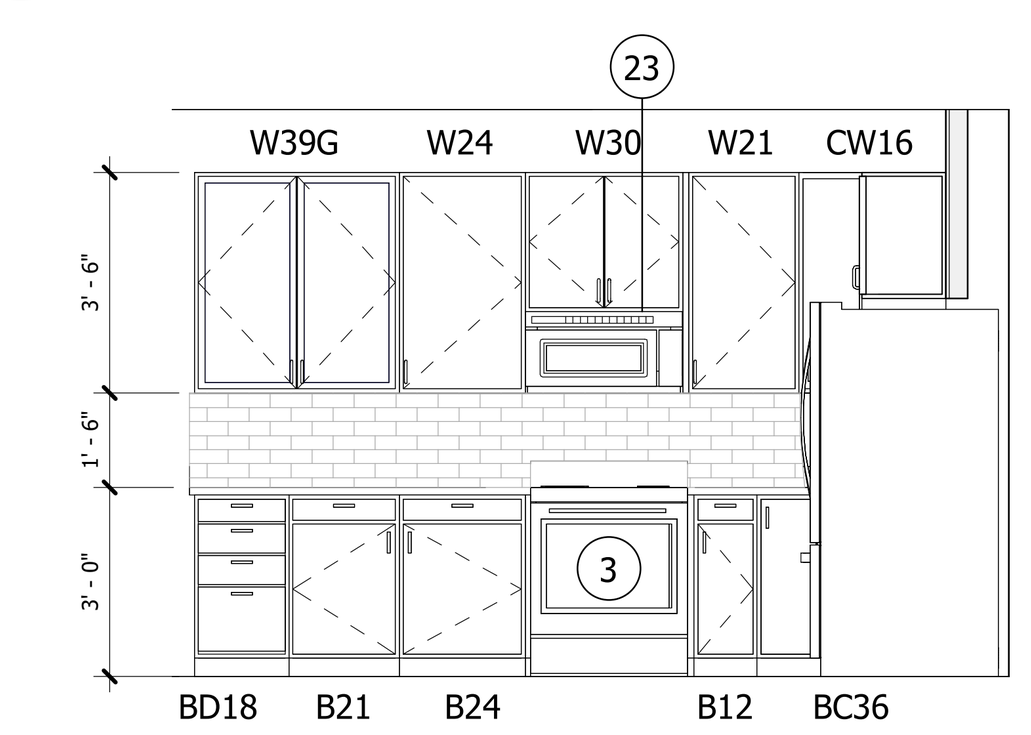


**8 UNIT B5 - KITCHEN - ELEV 1**
**SCALE : 1/4" = 1'-0"**

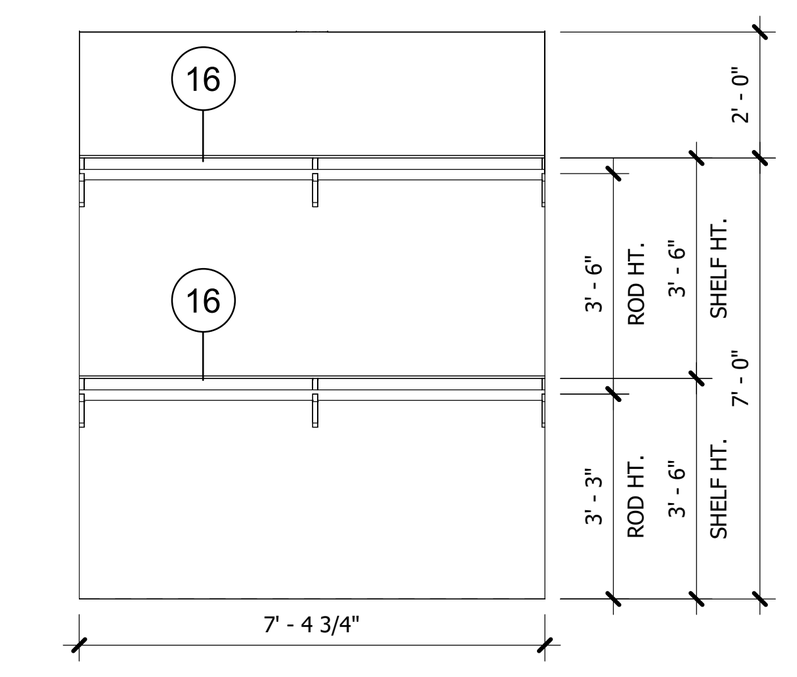


**12 UNIT B5 - CLOSET 1 - ELEV 1**
**SCALE : 1/4" = 1'-0"**

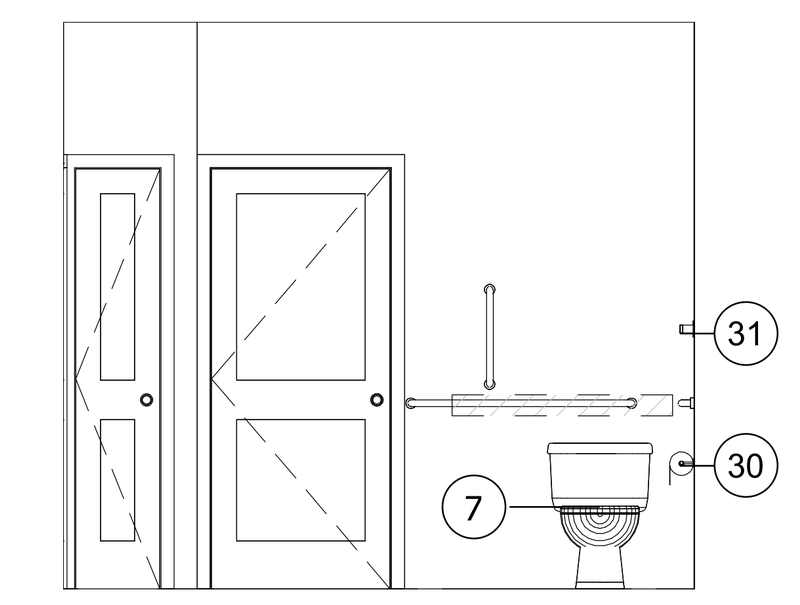

**7 UNIT B5 - BATHROOM - ELEV 3**
**SCALE : 1/4" = 1'-0"**

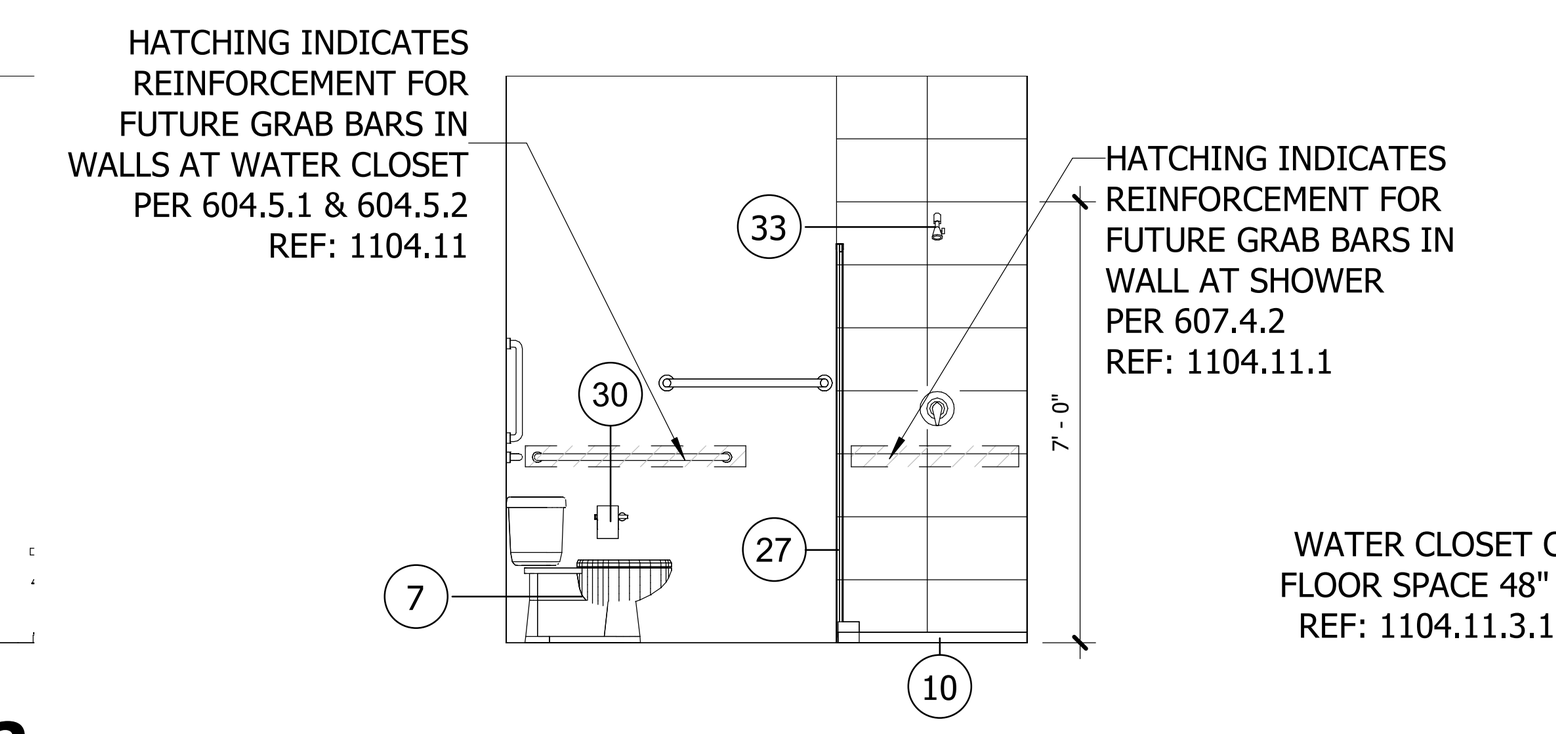


**6 UNIT B5 - BATHROOM - ELEV 2**
**SCALE : 1/4" = 1'-0"**

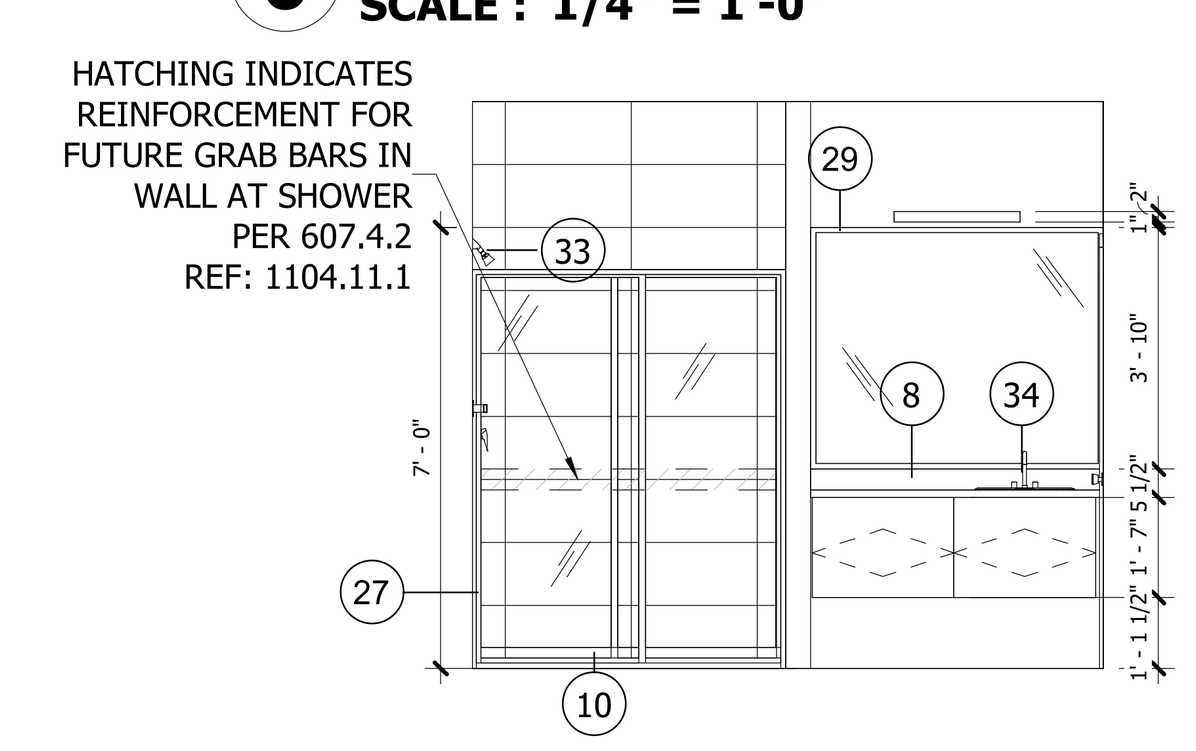


**5 UNIT B5 - BATHROOM - ELEV 1**
**SCALE : 1/4" = 1'-0"**

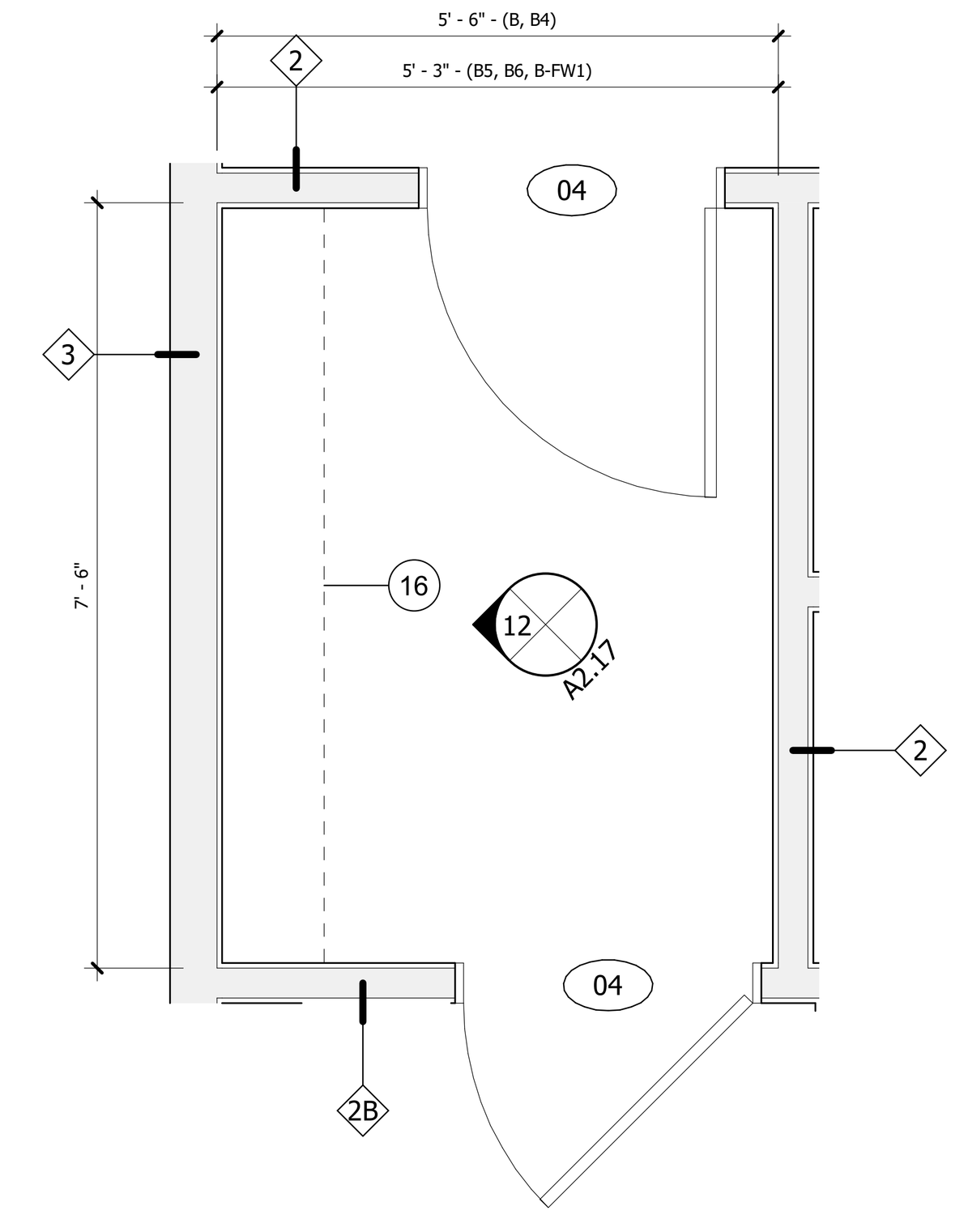


**11 UNIT B5 - CLOSET 1 - PLAN**
**SCALE : 1/2" = 1'-0"**

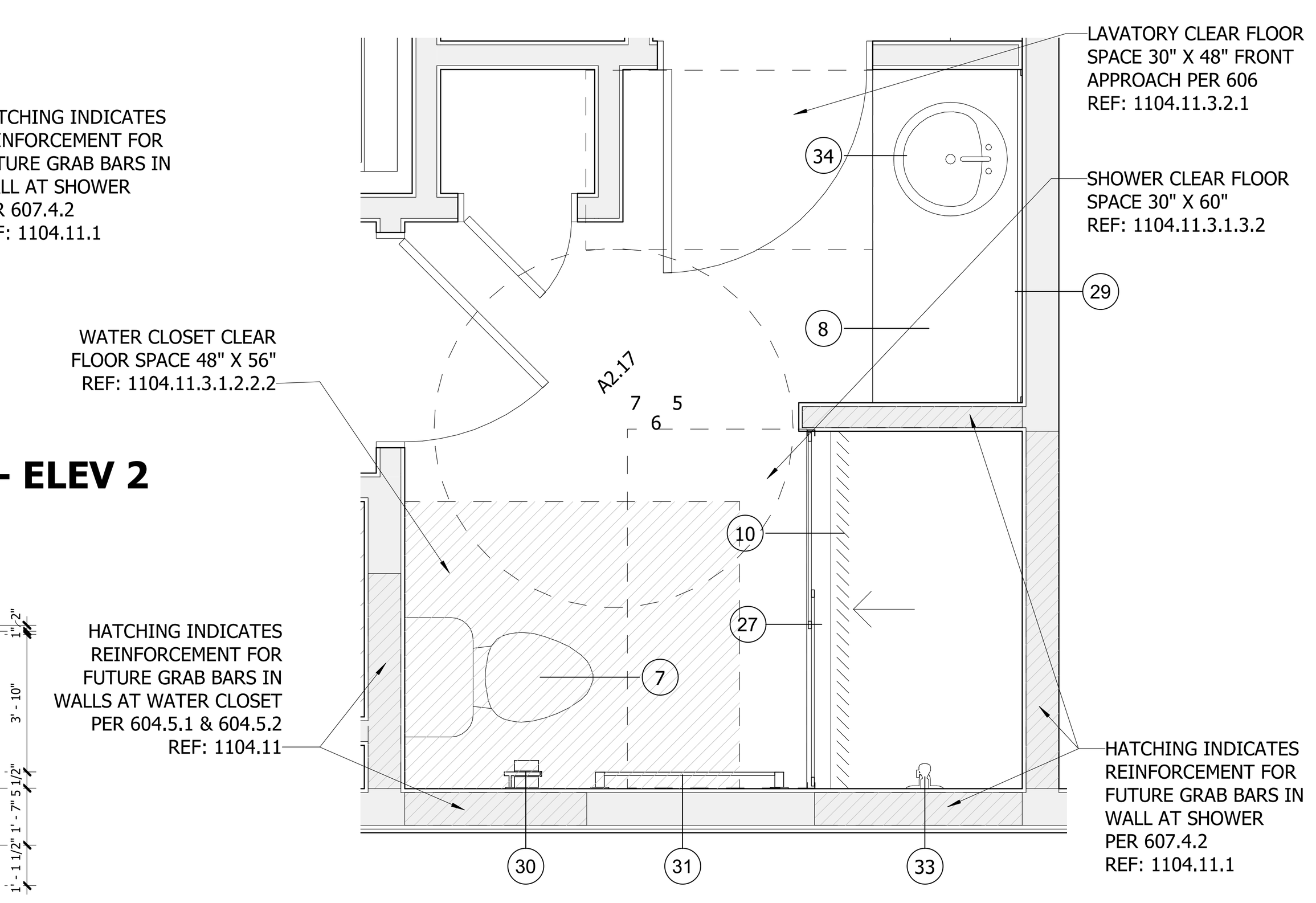


**4 UNIT B5 - BATHROOM - PLAN**
**SCALE : 1/2" = 1'-0"**

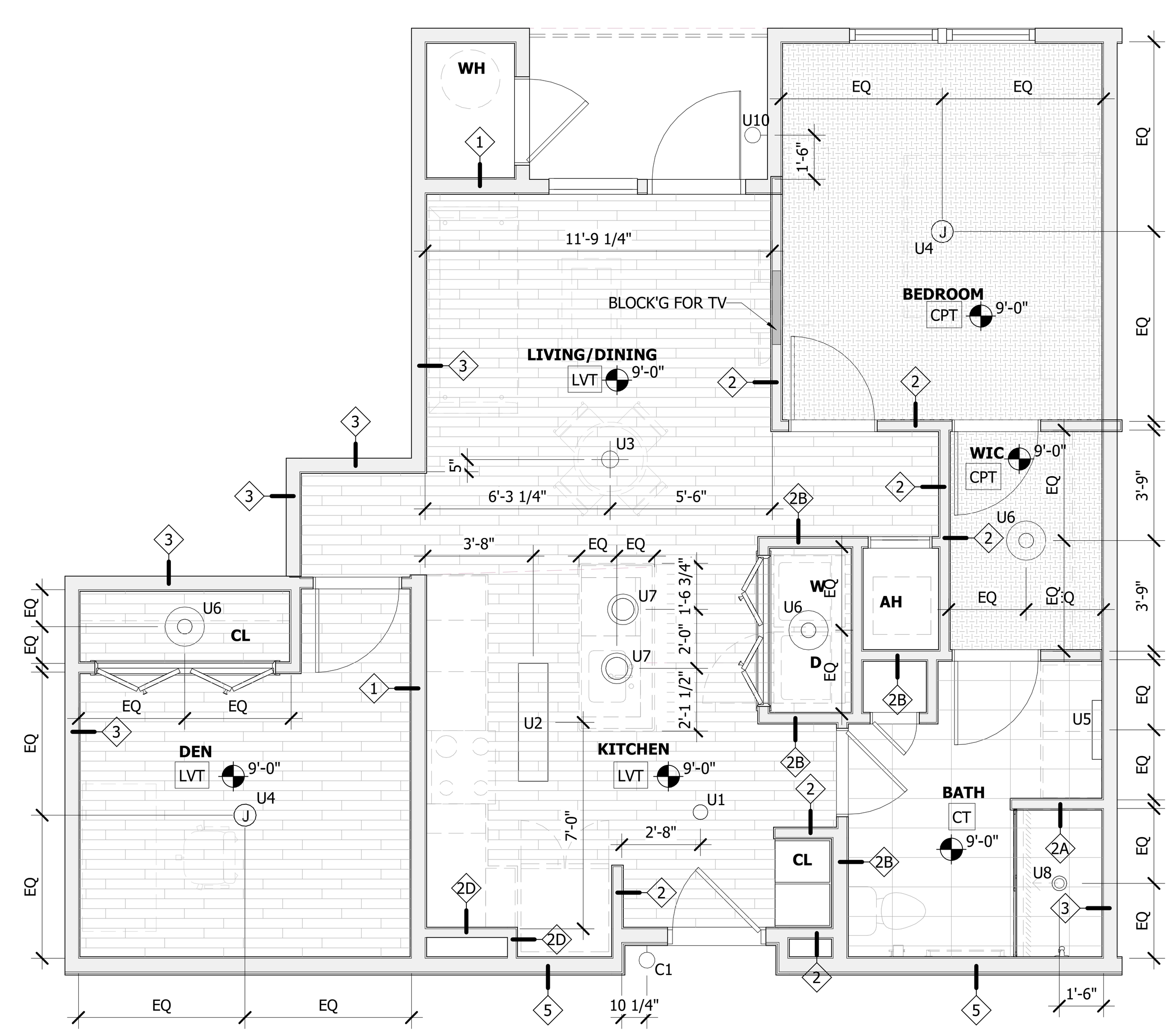


**2 UNIT B5 RCP**
**SCALE : 1/4" = 1'-0"**

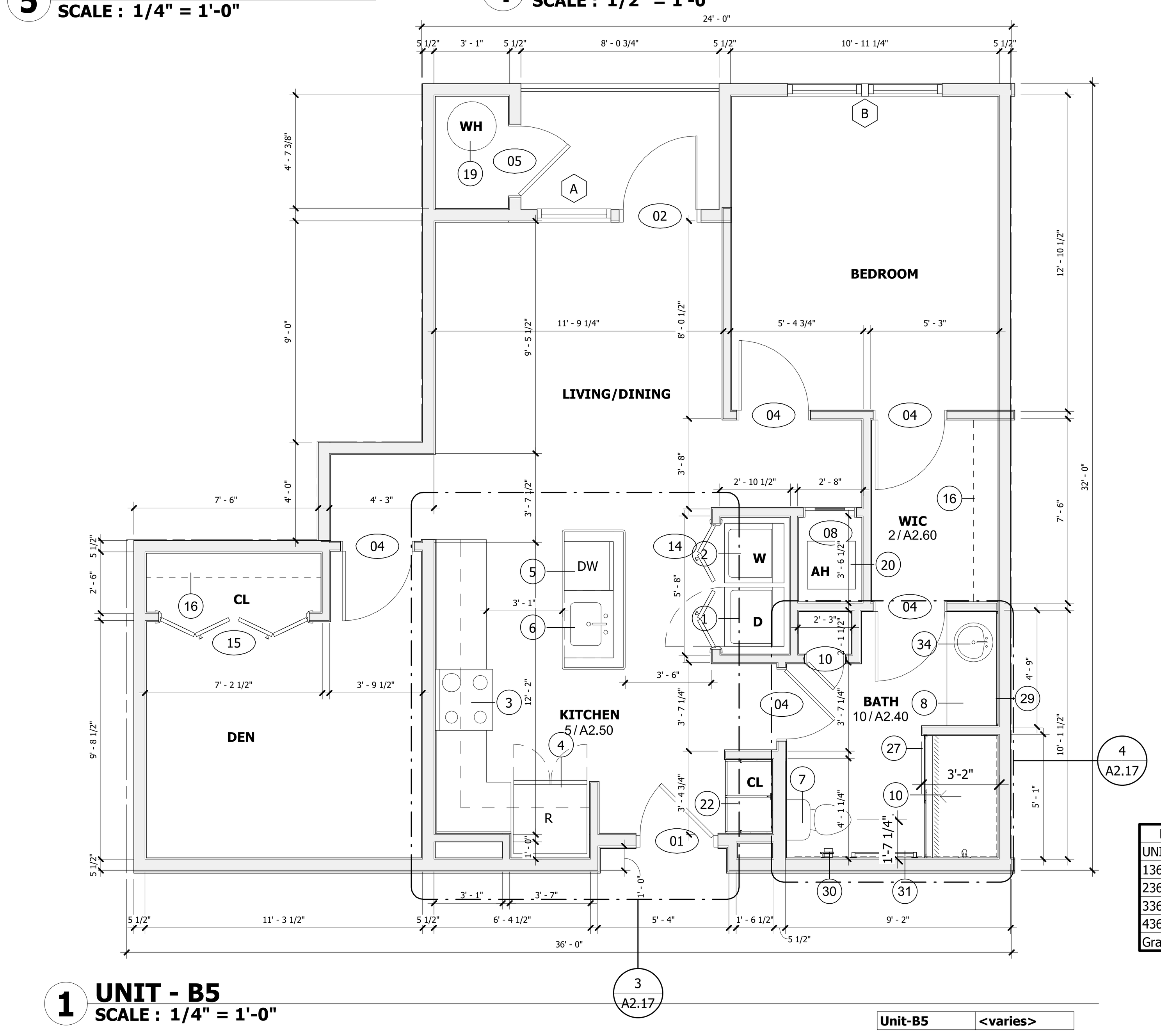


**1 UNIT - B5**
**SCALE : 1/4" = 1'-0"**

| ROOM # |
|---|
| UNIT B5 |
| 136 |
| 236 |
| 336 |
| 436 |
| Grand total: 4 |

Unit-B5 <varies>

ALL REPORTS, PLANS, SPECIFICATIONS AND COMPUTER FILES RELATING TO THIS PROJECT ARE THE PROPERTY OF THE MARTIN ARCHITECTURAL GROUP. THE MARTIN ARCHITECTURAL GROUP RETAINS ALL COMMON LAW, STATUTE AND OTHER RESERVED RIGHTS INCLUDING THE COPYRIGHT THERETO. REPRODUCTION OF THE MATERIAL HEREIN OR SUBSTANTIAL USE WITHOUT WRITTEN PERMISSION OF THE MARTIN ARCHITECTURAL GROUP VIOLATES THE COPYRIGHT LAWS OF THE UNITED STATES AND WILL BE SUBJECT TO LEGAL PROSECUTION.
©2022, The Martin Architectural Group, P.C.

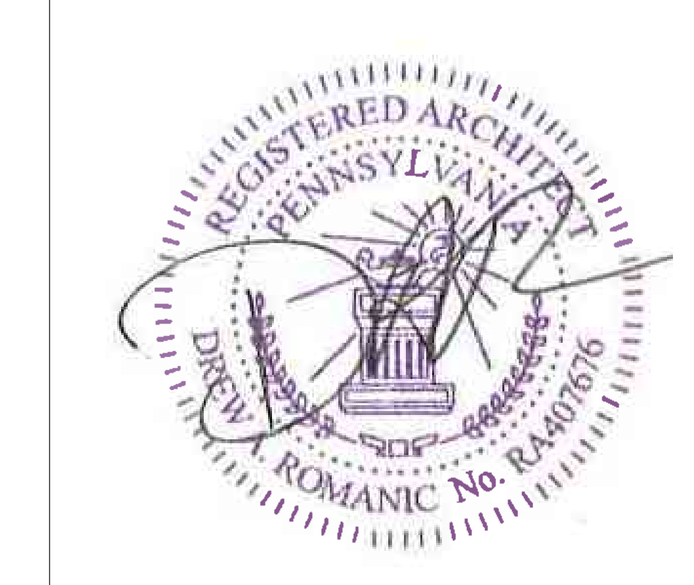


THE MARTIN ARCHITECTURAL GROUP, P.C.
ARCHITECTS AND LAND PLANNERS
A PROFESSIONAL CORPORATION
240 NORTH 22ND STREET, PHILADELPHIA, PA, 19103
P (215) 665-1080 F (215) 561-5064

| | |
|---|---|
| P.A.: | DREW ROMANIC |
| P.M.: | JASON DECAMPLI |
| DRAWN BY: | Author |
| PROJECT NO: | 1362-12 |

| NO. | REVISION | DATE |
|---|---|---|
| 1 | PERMIT SET | 12/20/22 |

# UNIT PLANS (UNIT B5)

**Granite Run Apartment 02**

MIDDLETOWN TOWNSHIP, PA

| | |
|---|---|
| SCALE: | |
| DATE: | 11/16/22 |

# A2.17

©2022, The Martin Architectural Group, P.C.

Printed: 1/13/2023 4:30:00 PM

## DOOR SCHEDULE - DWELLING UNIT

| MARK | DOOR TYPE | WIDTH | HEIGHT | DOOR MATERIAL | FRAME TYPE | FRAME MATERIAL | FIRE RATING | REMARKS |
|---|---|---|---|---|---|---|---|---|
| 01 | UA | 3'-0" | 7'-0" | MTL | F1 | MTL | 20 min. | UNIT ENTRY - SPRING HINGES |
| 02 | UE | 3'-0" | 7'-0" | VY | F1 | VY | | BALCONY DOOR |
| 03 | UB | 3'-0" | 6'-8" | MTE | F1 | WD | | |
| 04 | UB | 2'-10" | 6'-8" | MTE | F1 | WD | | |
| 05 | UA | 2'-10" | 6'-8" | EM | F1 | MTL | | UNIT EXT. MECH DOOR |
| 06 | UB | 2'-6" | 6'-8" | MTE | F1 | WD | | |
| 07 | UB | 2'-0" | 6'-8" | MTE | F1 | WD | | |
| 08 | UC | 2'-0" | 6'-8" | MTE | F1 | WD | | LOUVERED AIR HANDLER |
| 09 | UC | 1'-6" | 6'-8" | MTE | F1 | WD | | LOUVERED AIR HANDLER |
| 10 | UB | 1'-6" | 6'-8" | MTE | F1 | WD | | |
| 11 | UB | 1'-4" | 6'-8" | MTE | F1 | WD | | |
| 12 | UDD | 4'-0" | 6'-8" | MTE | | WD | | SLIDING BARN DOOR |
| 13 | UBB | 5'-0" | 6'-8" | MTE | F2 | WD | | DOUBLE SWING DOOR |
| 14 | UCC | 5'-0" | 6'-8" | MTE | F2 | WD | | LOUVERED BI-FOLD |
| 15 | UCC | 6'-0" | 6'-8" | MTE | F2 | WD | | LOUVERED BI-FOLD |
| 19 | UB | 1'-9" | 6'-8" | MTE | F1 | WD | | |
| E | | 3'-0" | 7'-0" | | | | | |
| EE | | 6'-0" | 7'-0" | | | | | |
| F | | 6'-0" | 7'-0" | | | | | *RATED GLASS |

## ROOM FINISH SCHEDULE

| SPACE | FLOOR | WALL | CEILING | HEIGHT | REMARKS |
|---|---|---|---|---|---|
| KITCHEN | 3 | A | 1 | 9'-0" | |
| LIVING RM. | 3 | A | 1 | 9'-0" | |
| BEDROOMS | 1 | A | 1 | 9'-0" | |
| DEN | 3 | A | 1 | 9'-0" | |
| BATHS | 4 | B/C | 2 | 9'-0" | |
| CLOSETS | | A | 1 | 9'-0" | FLOORING: MATCH ADJ. |
| LAUNDRY | 3 | A | 2 | 9'-0" | FLOORING: MATCH ADJ. |
| UNIT-HVAC | | A | 1 | 9'-0" | FL.: GYPCRETE PAINT-LIGHT GRAY |

### MATERIAL CODE

| FLR. / BASE | | WALL | | CEILING | |
|---|---|---|---|---|---|
| 1 | CPT / WD | A | G.W.B. | 1 | G.W.B. |
| 2 | | B | MR.G.W.B. | 2 | MR.G.W.B. |
| 3 | LVT / WD | C | CT-2 | 3 | |
| 4 | CT / CT | D | | 4 | |
| 5 | | E | | 5 | |
| 6 | | F | | 6 | |
| 7 | | G | | 7 | |
| 8 | | H | | 8 | |

MATERIAL GLOSSARY

| | |
|---|---|
| CPT | CARPET - SHAW GULF WINDS - COLOR: 532 MINERAL |
| CT-1 | CERAMIC TILE - 12X24 FLORIM MATERIA - COLOR: HONED 02 |
| CT-2 | CERAMIC TILE - 12X24 FLORIM MATERIA - COLOR: STONE CALACATTA |
| G.W.B. | GYPSUM WALL BOARD |
| MR.G.W.B. | MOISTURE RESISTANT G.W.B. |
| LVT | VINYL WOOD PLANK - SHAW TERRAIN 12 MIL - COLOR: 766 ECHO |
| WD. | WOOD |

## UNIT DOOR TYPES

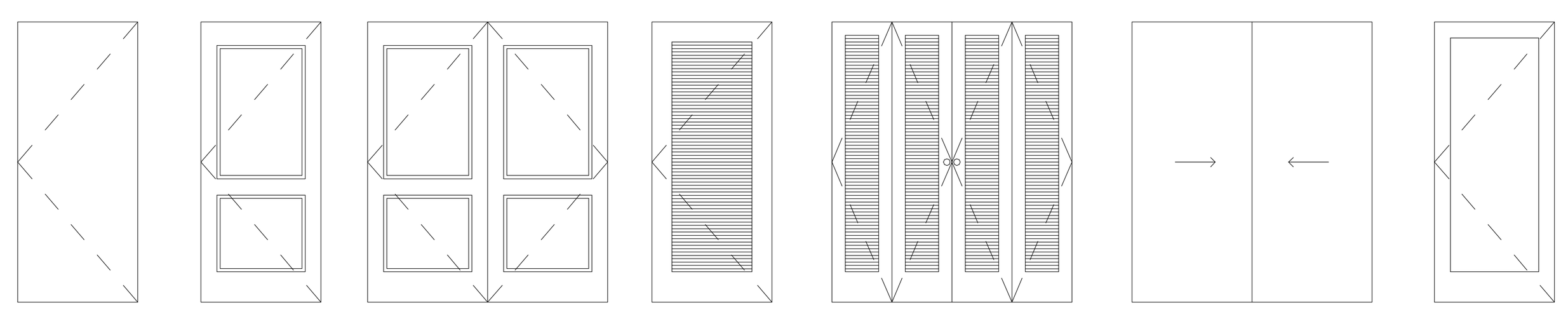


## FRAME TYPES

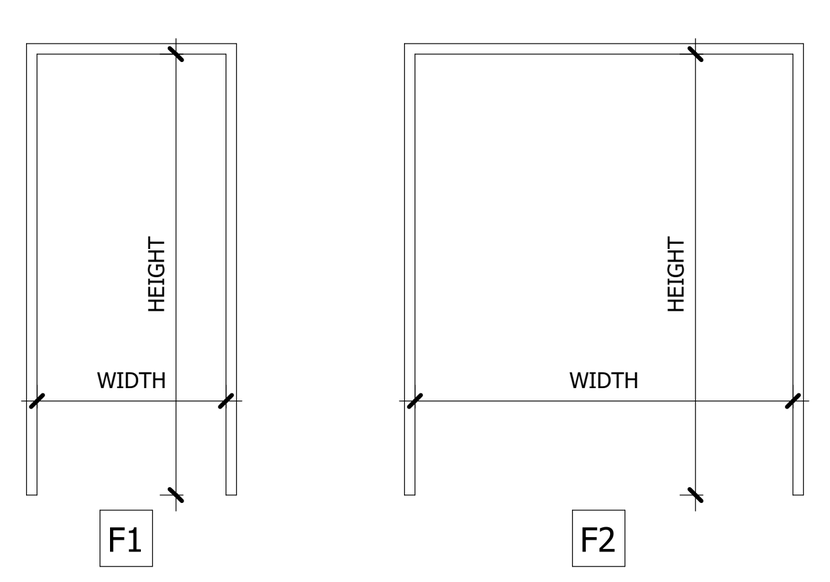


**DOOR/FRAME MATERIAL KEY:**

AL ALUMINUM
EM EXTERIOR METAL
GL GLASS
HC HOLLOW CORE
HM HOLLOW METAL
MTL METAL
SC SOLID CORE
SR STILE & RAIL
VY VINYL
WD WOOD
MTE MASONITE

## WINDOW SCHEDULE

| MARK | WIDTH | HEIGHT | WINDOW TYPE | CONSTRUCTION TYPE | COMMENTS |
|---|---|---|---|---|---|
| A | 3'-0" | 6'-0" | SINGLE HUNG | VINYL | All windows to be provided with opening limiters. See specifications. |
| B | 6'-3 1/2" | 6'-0" | SINGLE HUNG | VINYL | All windows to be provided with opening limiters. See specifications. |

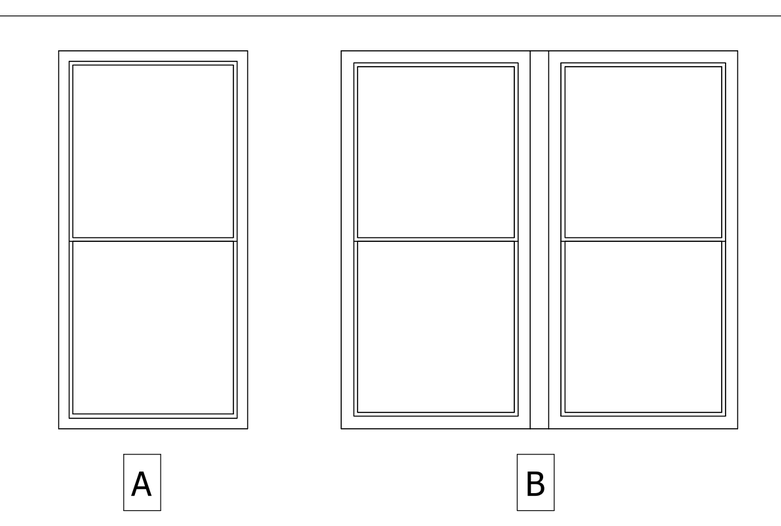


NOTE: (2) 2X6 FRT STUDS PROVIDED BETWEEN GROUP WINDOWS. (TYPICAL)
PROVIDE 4" LIMITATION FOR WINDOW LIMITERS ON ALL WINDOWS

## LIGHT FIXTURE LEGEND

| | |
|---|---|
| U1 | LITHONIA FMSATL-16-20840-BN; SEMI FLUSH MOUNT |
| U2 | LITHONIA FMFL-30840-SATL-BN; LINEAR FLUSH MOUNT |
| U3 | LITHONIA DFMADRL-14-F01; FMPANL-14-20840M6; LED SURFACE MOUNT DRUM |
| U4 | SATCO COVER PLATE |
| U5 | PROGRESS P300187-009-30; LED BATH VANITY |
| U6 | LITHONIA FMMUSL-9-14840-WH; LED CLOSET MUSHROOM |
| U7 | LITHONIA MDPC-BNP-M6; DGDT 1003 M6 |
| U8 | COOPER SMD6R-12-930-WH; 1200 LUMEN SLIM SURFACE (120 VOLT ONLY) |
| U9 | NUVO 62-1161; 7" LED FLUSH MOUNT DISCK |
| U10 | LITHONIA OLWPLED-P1-40K-120-PE-BZ; LED MINI WALL PACK |

## UNIT PLAN AND INTERIOR ELEVATION KEYNOTES

| Number | Description |
|---|---|
| 1 | WASHER |
| 2 | DRYER |
| 3 | RANGE / OVEN |
| 4 | REFRIGERATOR |
| 5 | DISHWASHER |
| 6 | KITCHEN SINK / FAUCET |
| 7 | TOILET |
| 8 | VANITY - SEE ELEVATION FOR SIZE |
| 9 | 30"X60" TUB |
| 10 | 36"X60" SHOWER BASE |
| 11 | 32"X60" SHOWER BASE |
| 12 | ACCESSIBLE THRESHOLD - MARBLE |
| 13 | ACCESSIBLE THRESHOLD - ALUMINIUM |
| 14 | SOFFIT OVER REFRIGERATOR AND BEHIND CABINET |
| 15 | LINEN SHELVES (5) PER SPECIFICATION |
| 16 | WIRE SHEVLING |
| 17 | KNEE WALL BELOW COUNTERTOP |
| 18 | BALCONY RAILING @ 42" HIGH |
| 19 | WALL MOUNTED HOT WATER HEATER |
| 20 | HVAC UNIT MOUNTED ON WALL |
| 21 | PRE ROCK BEHIND BATHING FIXTURES |
| 22 | CUBBIE CABINETS |
| 23 | MICROWAVE WITH RECIRCULATION HOOD |
| 24 | WALL TILE BETWEEN CONTERTOP AND WALL CABINET. SEE 1D DRAWING |
| 25 | BLOCKING FOR GRAB BAR. SEE FIG. 4- SHEET A0.06 |
| 26 | 24" HORIZONTAL GRAB BAR @ TUB BACK WALL. SEE FIG. 4 - SHEET A0.06 |
| 27 | SHOWER ROD |
| 28 | NOT USED |
| 29 | PAINTED FRAME MIRROR |
| 30 | TOILET TISSUE HOLDER @ 26" A.F.F. |
| 31 | 30" TOWEL BAR |
| 32 | ROBE HOOK |
| 33 | SHOWER HEAD |
| 34 | VANITY SINK BOWL |

**NOTES:**

1. SEE SPECIFICATIONS FOR ADDITIONAL INFORMATION.
2. ALL DOOR HARDWARE TO BE COMPLIANT WITH THE FEDERAL FAIR HOUSING ACT (FHA).
3. DOORS SHALL BE OPENABLE WITH NO MORE THAN ONE RELEASING OPERATION.
4. PROVIDE ACCESSIBLE THRESHOLDS AT ALL DOORS.
5. ALL UNITS ARE ADAPTABLE PER FHA. SEE SHEET A0.06 FOR ADDITIONAL INFORMATION.
6. ALL DIMENSIONS ARE TO ROUGH FRAMING U.N.O.
7. ALL WALLS ARE 2X4 STUDS UNLESS NOTED OTHERWISE.
8. ALL TENANT SEPERATIONS AND CORRIDOR WALLS ARE 2X6 UNLESS NOTED OTHERWISE.
9. PATIO AT FIRST FLOOR 4" BELOW UNIT FINISH FLOOR.
10. BALCONIES ARE FLUSH WITH GYPCRETE TOPPING. SEE DETAIL.
11. ALL TOILETS SET ON NEOPRENE GASKET WITH INSULATED PIPE TRAP.
12. ALL KITCHEN APPLIANCES TO HAVE STAINLESS STEEL FRONTS.
13. WHERE DRAWINGS ARE IN CONFLICT WITH OTHER DRAWINGS, CONTRACTOR SHALL NOTIFY THE ARCHITECT.
14. PROVIDE BLOCKING FOR GRAB BARS IN ALL BATHROOMS
15. DIMENSION TO STUD UNLESS OTHERWISE NOTED
16. DIMESNION TO FINISH @ CABINETS
17. PROVIDE BLOCKING FOR TV WALL MOUNT, CENTER AT 60" A.F.F.
18. ALL BATHROOM VANITES ARE 21" IN DEPTH

### ROOM FINISH MATERIAL CODE

| | |
|---|---|
| CPT | CARPET |
| CT | CERAMIC TILE |
| CONC | CONCRETE |
| GWB | GYPSUM WALL BOARD |
| MR GWB | MOISTURE RESISTANT GWB |
| V | SHEET VINYL |
| VWP | VINYL WOOD PLANK |
| VCT | VINYL COMPOSITE TILE |
| WD | WOOD |

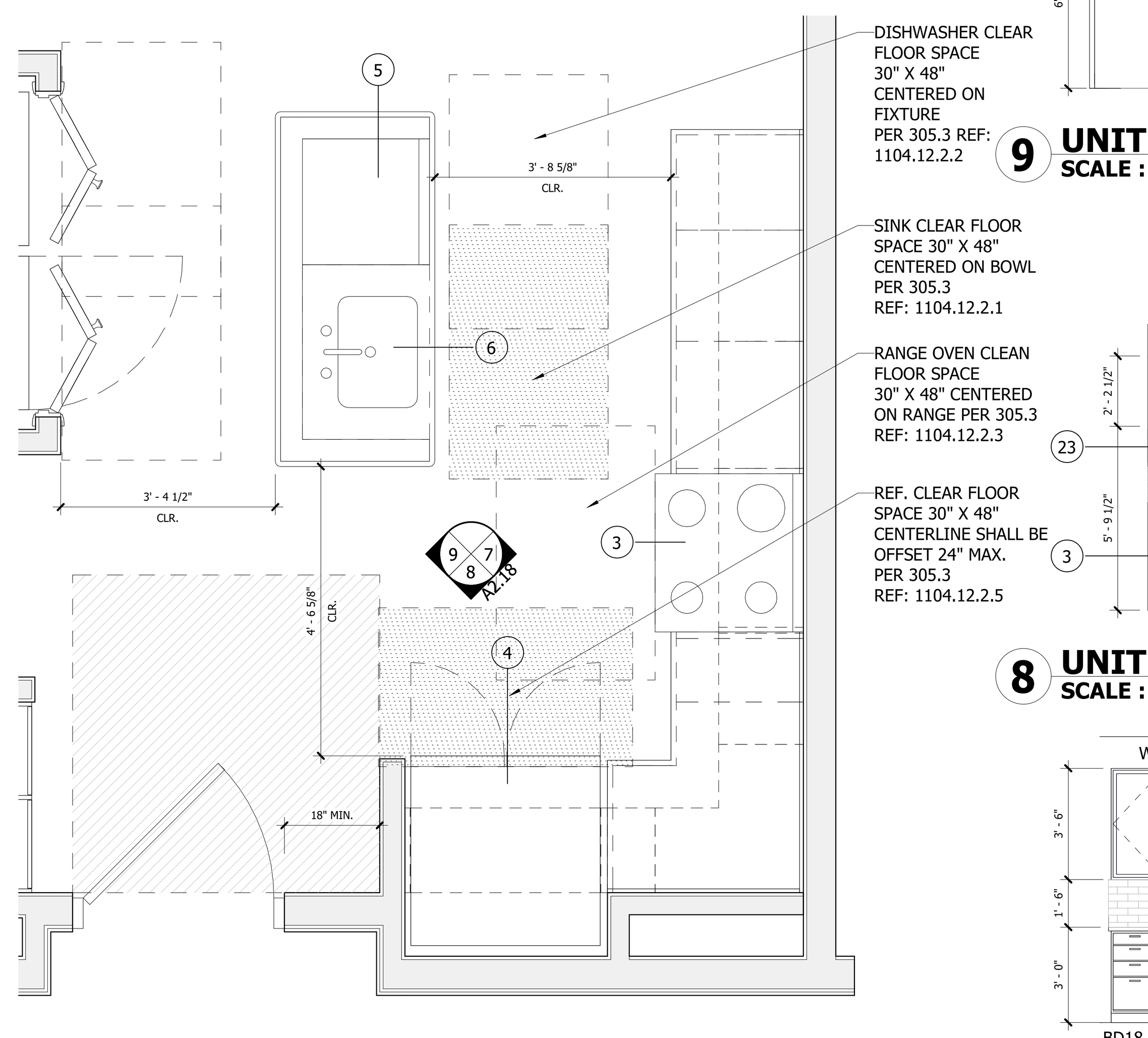


**3 UNIT B6 - KITCHEN - PLAN**
SCALE : 1/2" = 1'-0"




**9 UNIT B6 - KITCHEN - ELEV 3**
SCALE : 1/4" = 1'-0"

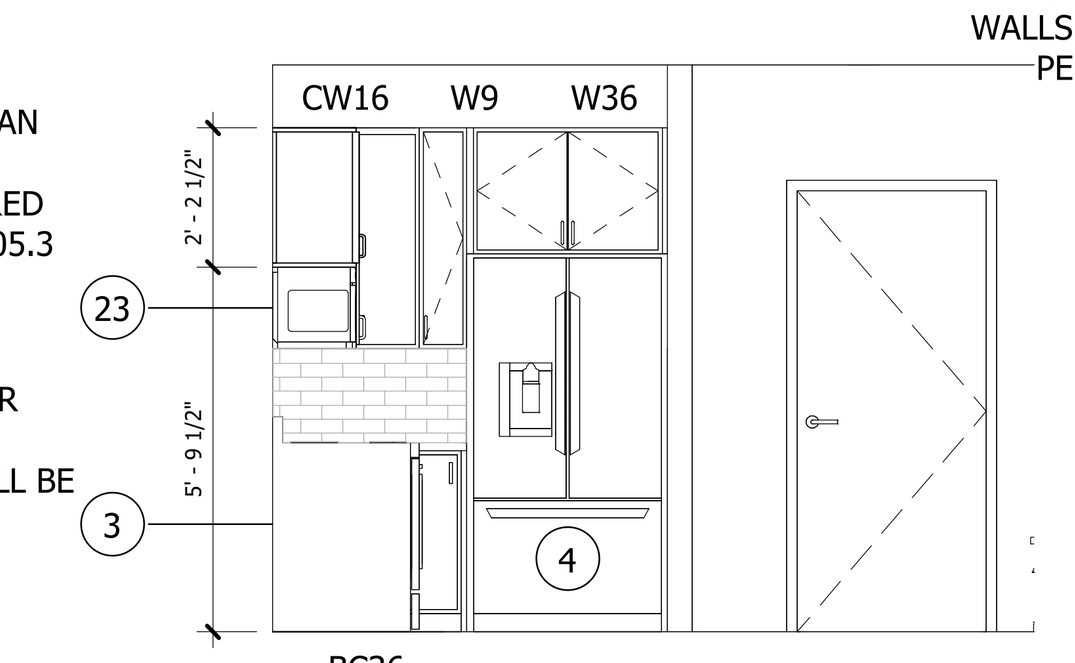


**8 UNIT B6 - KITCHEN - ELEV 2**
SCALE : 1/4" = 1'-0"

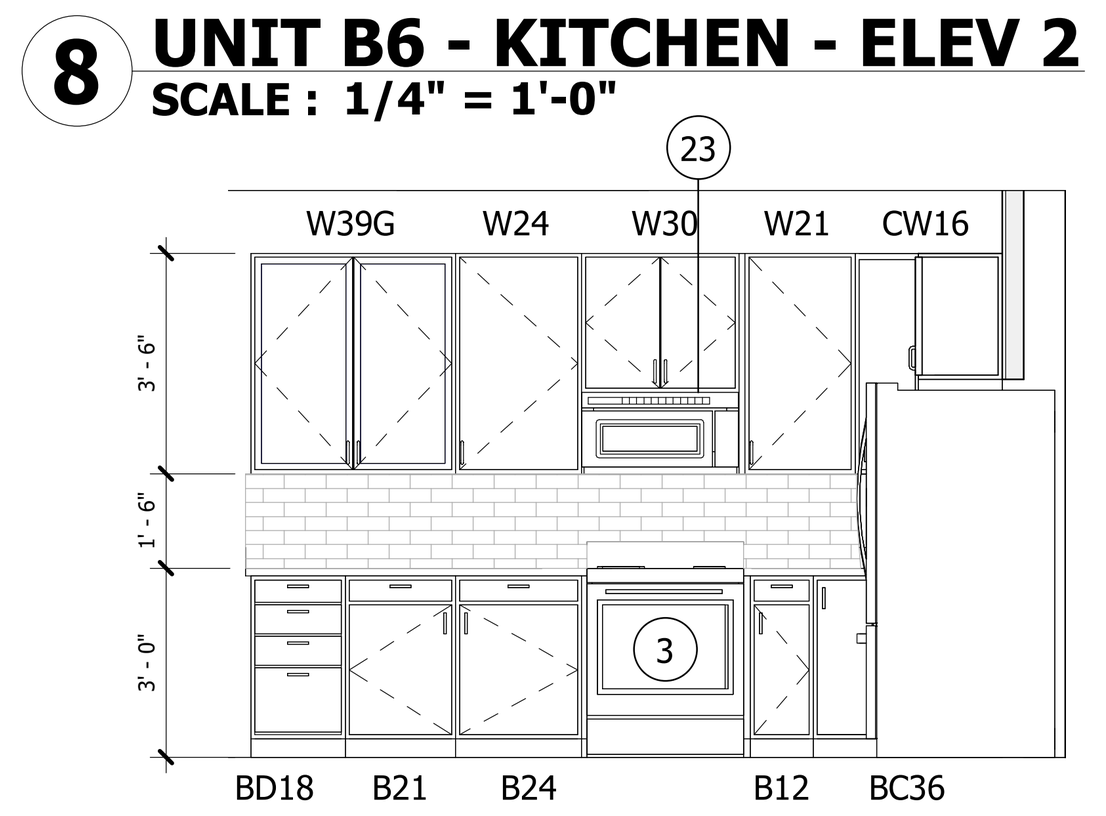


**7 UNIT B6 - KITCHEN - ELEV 1**
SCALE : 1/4" = 1'-0"

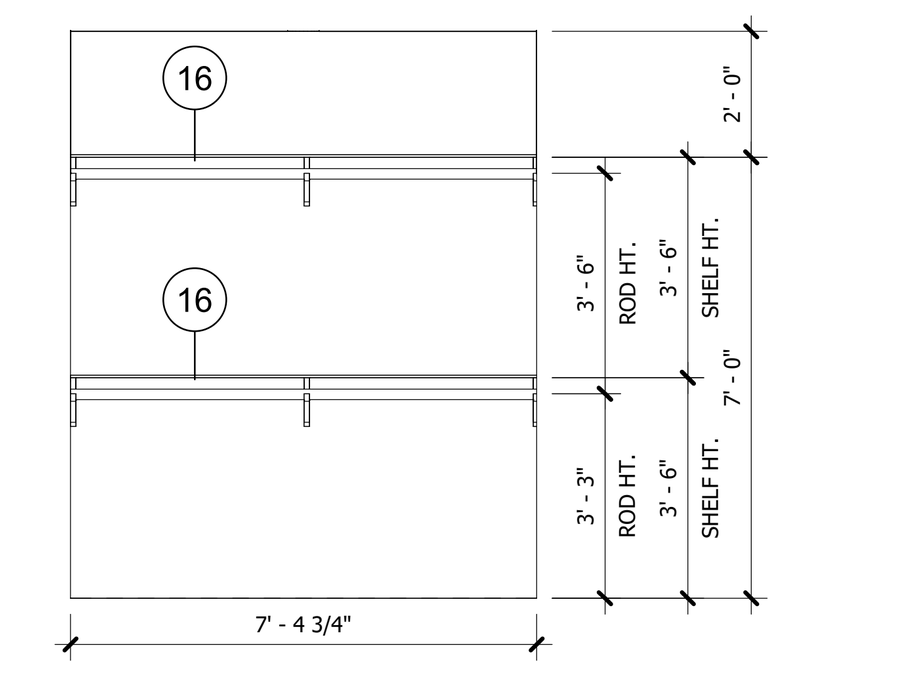


**11 UNIT B6 - CLOSET 1 - ELEV 1**
SCALE : 1/4" = 1'-0"

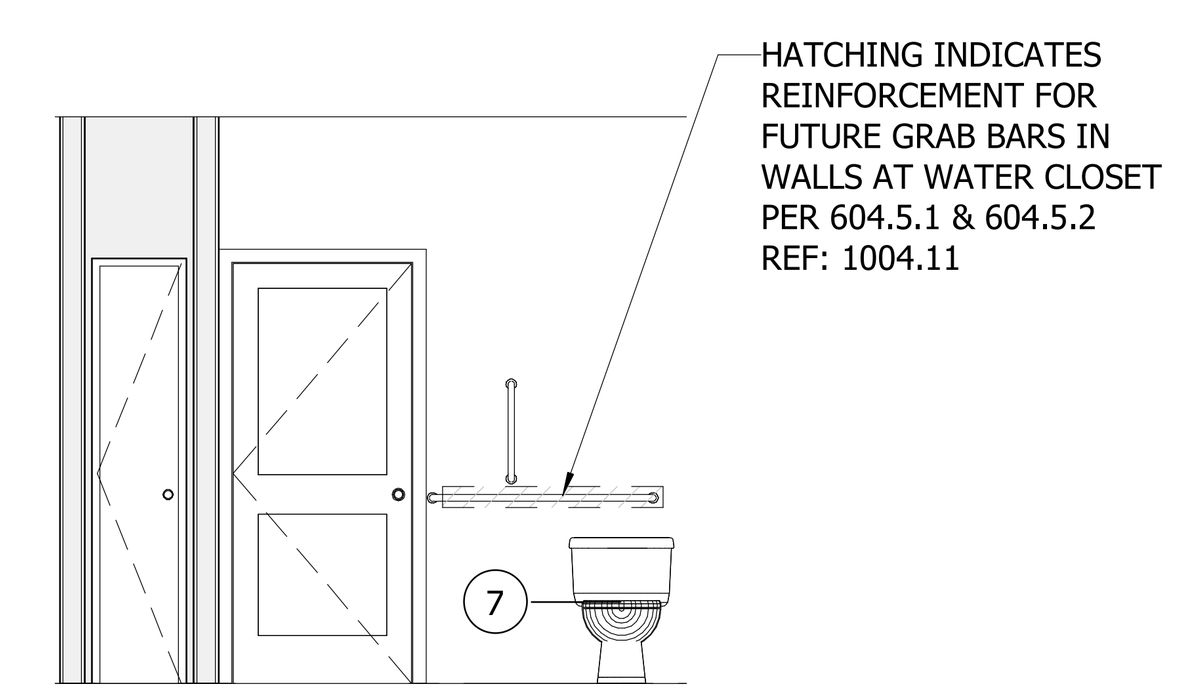


**6 UNIT B6 - BATHROOM - ELEV 3**
SCALE : 1/4" = 1'-0"

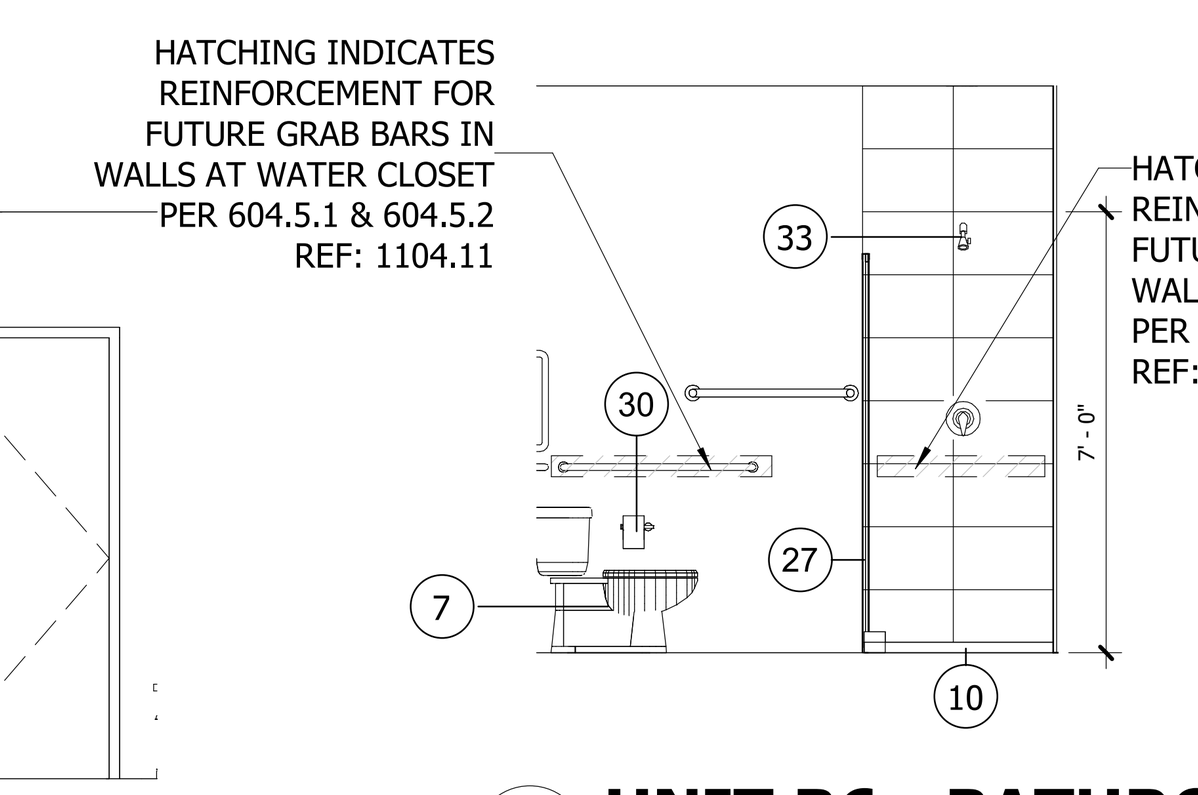


**5 UNIT B6 - BATHROOM - ELEV 2**
SCALE : 1/4" = 1'-0"

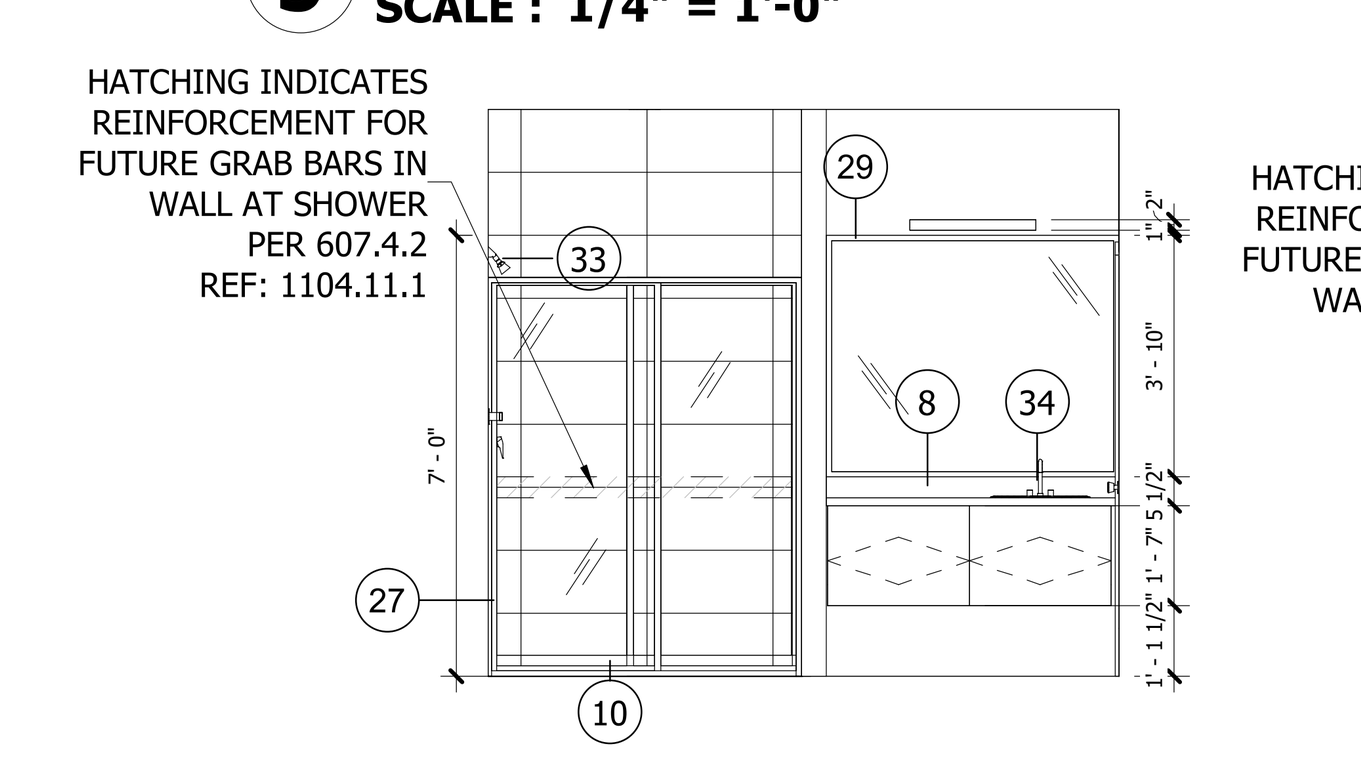


**4 UNIT B6 - BATHROOM - ELEV 1**
SCALE : 1/4" = 1'-0"

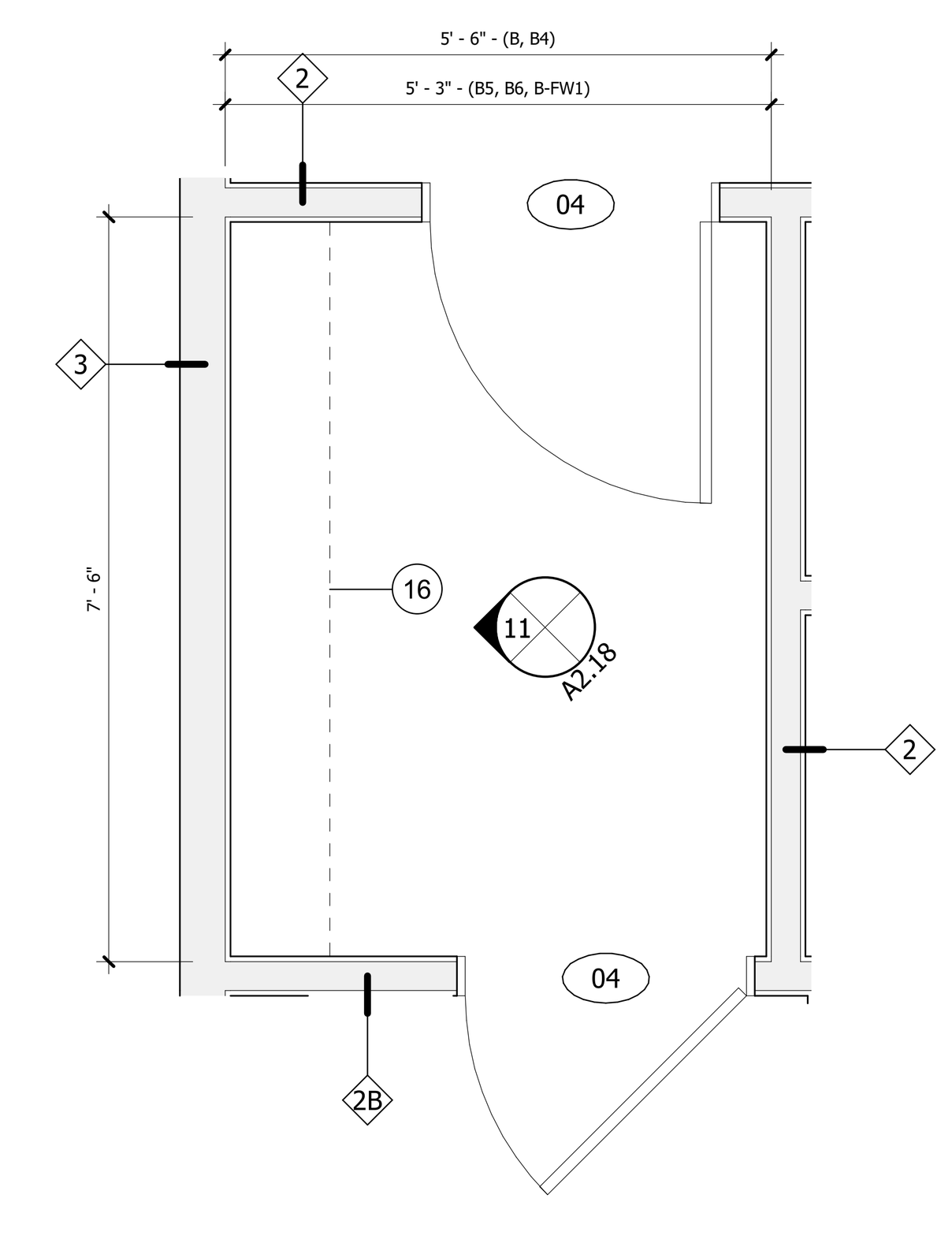


**10 UNIT B6 - CLOSET 1 - PLAN**
SCALE : 1/2" = 1'-0"

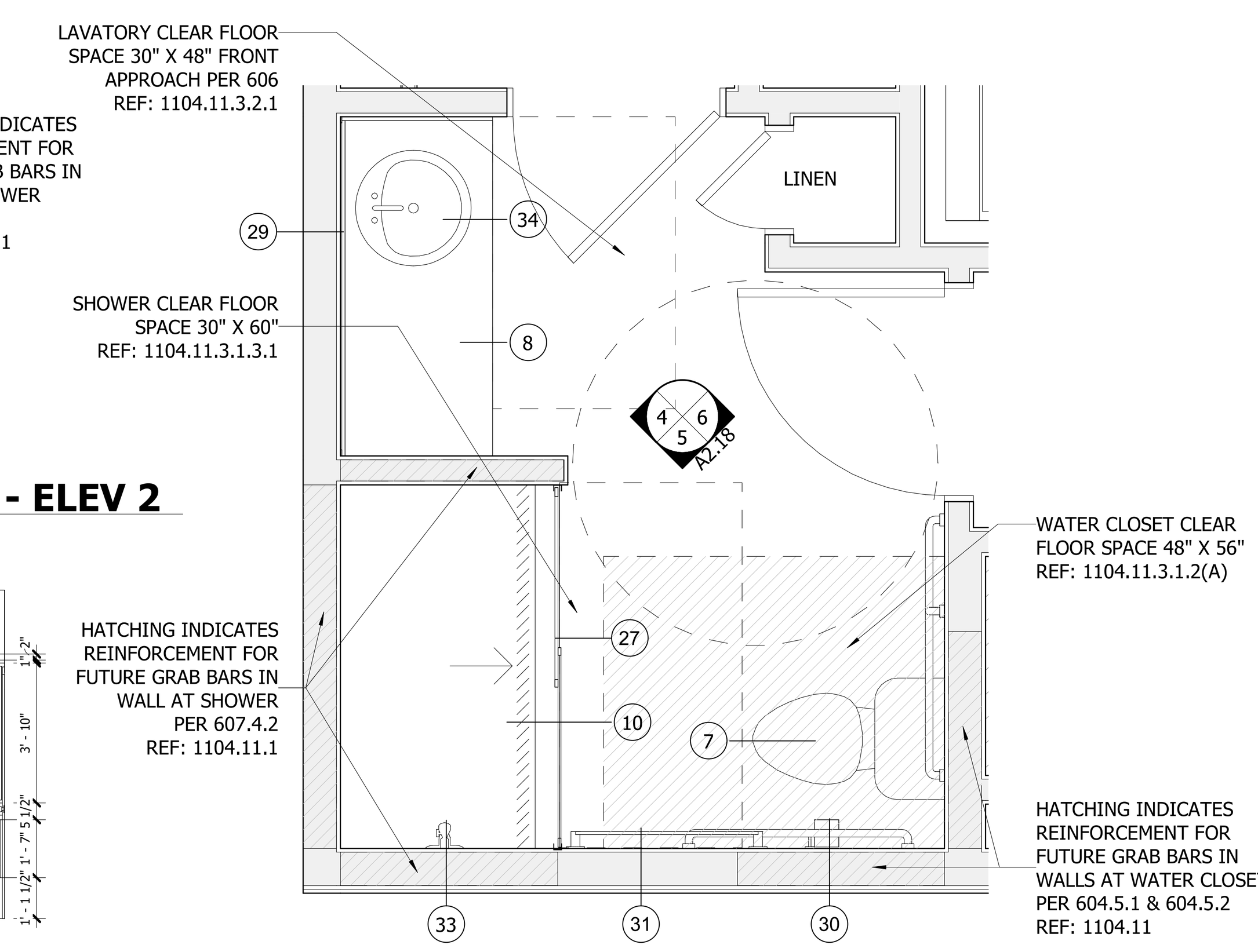


**2 UNIT B6 - BATHROOM - PLAN**
SCALE : 1/2" = 1'-0"

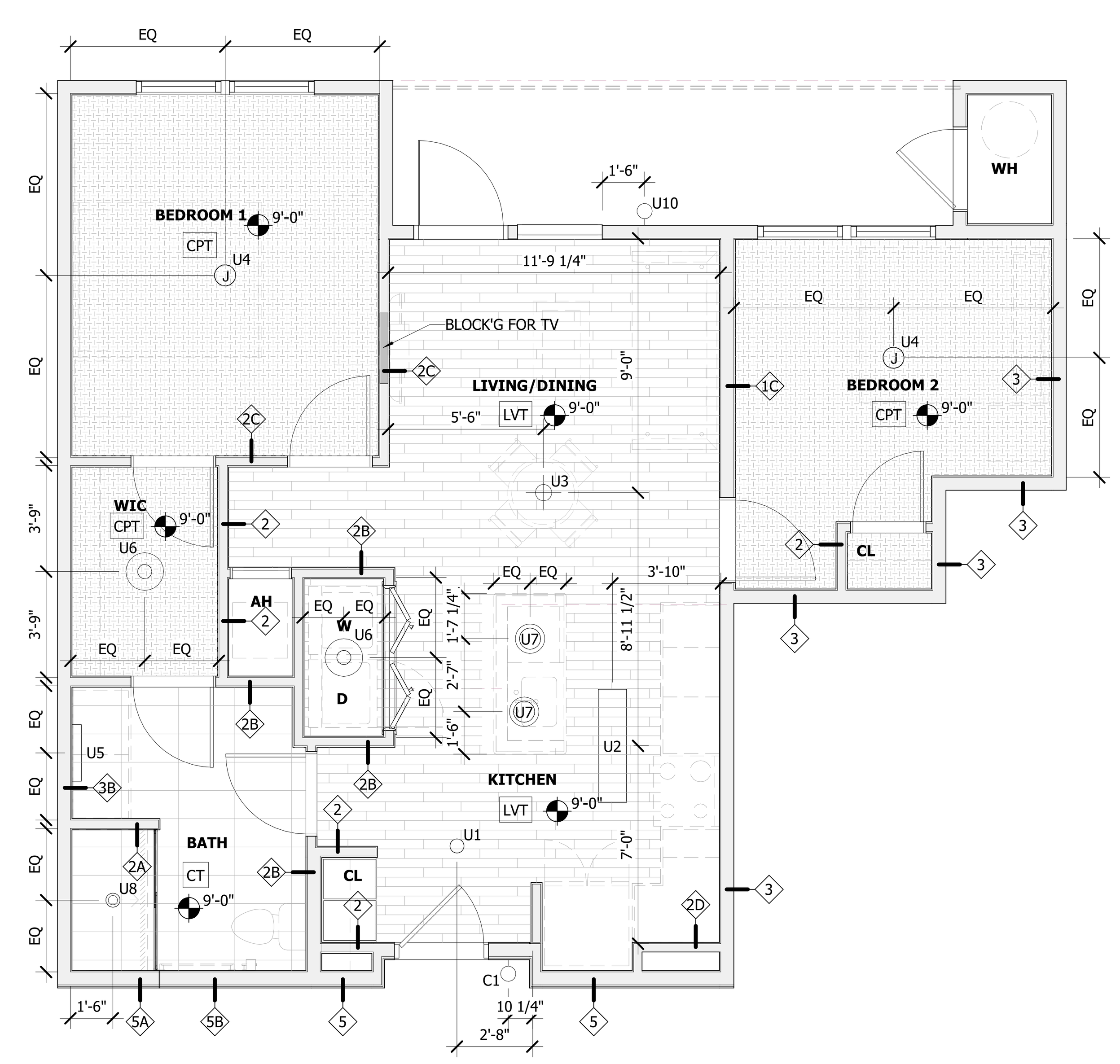


**1A UNIT B6 RCP**
SCALE : 1/4" = 1'-0"

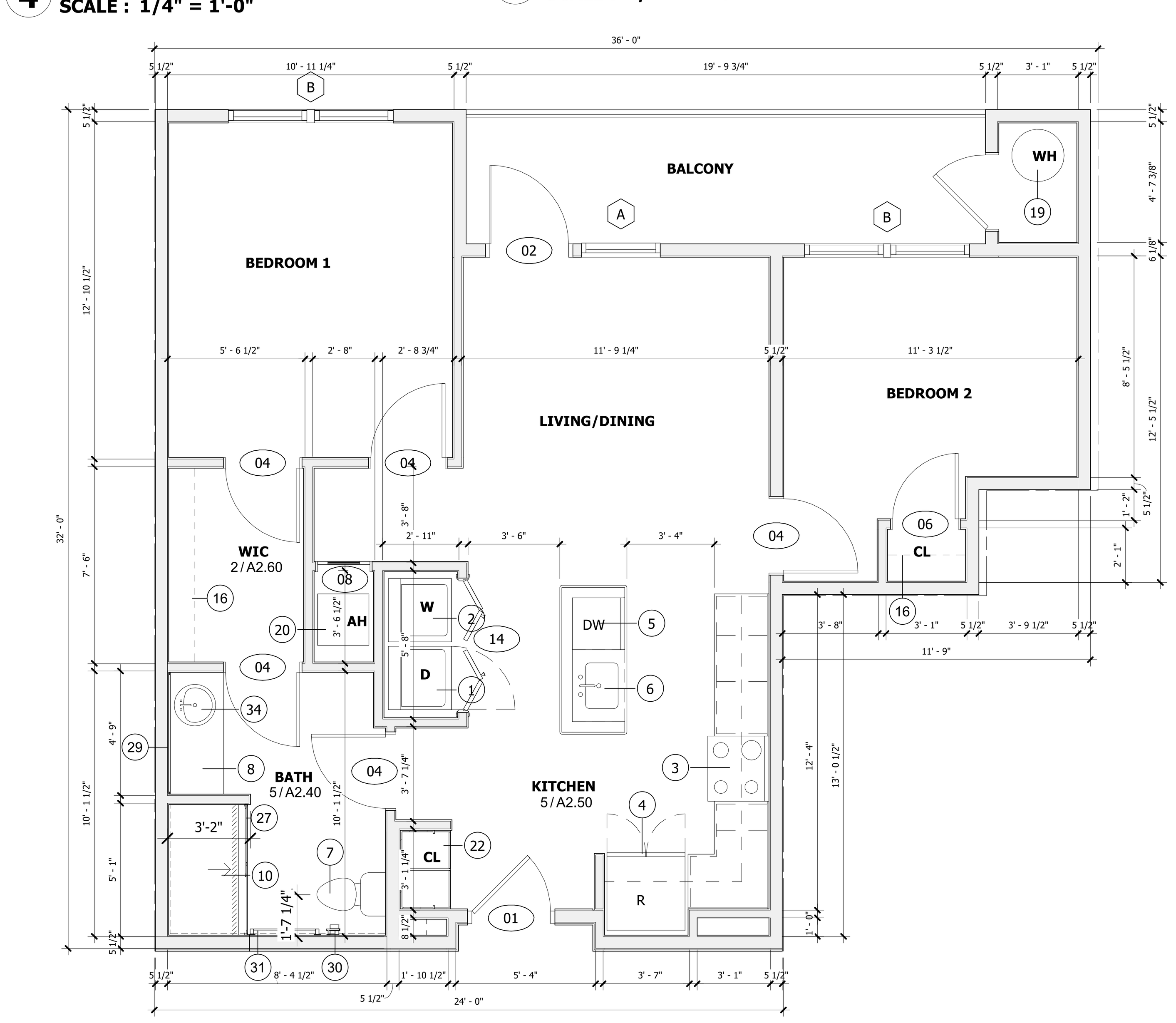


| ROOM # |
|---|
| UNIT B6 |
| 135 |
| 235 |
| 335 |
| 435 |
| Grand total: 4 |

**1 UNIT - B6**
SCALE : 1/4" = 1'-0"

| Unit-B6 | <varies> |
|---|---|


ALL REPORTS, PLANS, SPECIFICATIONS AND COMPUTER FILES RELATING TO THIS PROJECT ARE THE PROPERTY OF THE MARTIN ARCHITECTURAL GROUP. THE MARTIN ARCHITECTURAL GROUP RETAINS ALL COMMON LAW, STATUTE AND OTHER RESERVED RIGHTS INCLUDING THE COPY-RIGHT THERETO. REPRODUCTION OF THE MATERIAL HEREIN OR SUBSTANTIAL USE WITHOUT WRITTEN PERMISSION OF THE MARTIN ARCHITECTURAL GROUP VIOLATES THE COPYRIGHT LAWS OF THE UNITED STATES AND WILL BE SUBJECT TO LEGAL PROSECUTION.
©2022, The Martin Architectural Group, P.C.


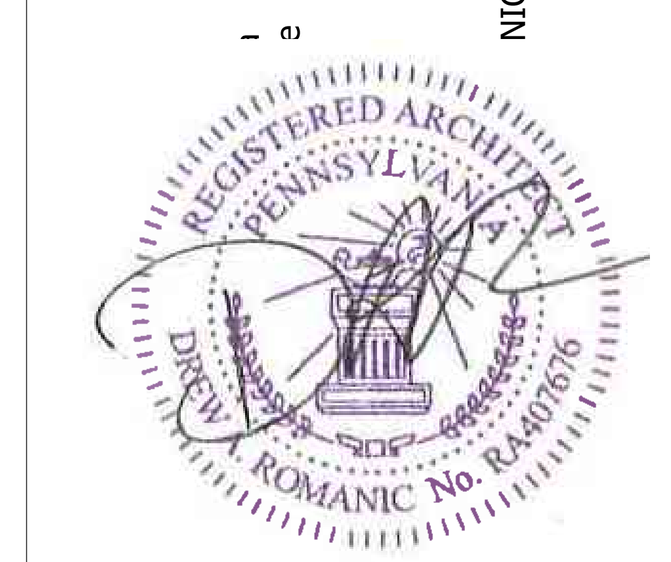



THE MARTIN ARCHITECTURAL GROUP, P.C.
ARCHITECTS AND LAND PLANNERS
A PROFESSIONAL CORPORATION
240 NORTH 22ND STREET, PHILADELPHIA, PA, 19103
P (215) 665-1080 F (215) 561-5064


| | |
|---|---|
| P.A.: | DREW ROMANIC |
| P.M.: | JASON DECAMPLI |
| DRAWN BY: | Author |
| PROJECT NO: | 1362-12 |

| NO. | REVISION | DATE |
|---|---|---|
| 1 | PERMIT SET | 12/20/22 |

# UNIT PLANS (UNIT B6)

**Granite Run Apartment 02**

MIDDLETOWN TOWNSHIP, PA

| | |
|---|---|
| SCALE: | |
| DATE: | 09/09/22 |

# A2.18

©2022, The Martin Architectural Group, P.C.

| DOOR SCHEDULE - DWELLING UNIT | | | | | | | | |
|---|---|---|---|---|---|---|---|---|
| MARK | DOOR TYPE | WIDTH | HEIGHT | DOOR MATERIAL | FRAME TYPE | FRAME MATERIAL | FIRE RATING | REMARKS |
| 01 | UA | 3'-0" | 7'-0" | MTL | F1 | MTL | 20 min. | UNIT ENTRY - SPRING HINGES |
| 02 | UE | 3'-0" | 7'-0" | VY | F1 | VY | | BALCONY DOOR |
| 03 | UB | 3'-0" | 6'-8" | MTE | F1 | WD | | |
| 04 | UB | 2'-10" | 6'-8" | MTE | F1 | WD | | |
| 05 | UA | 2'-10" | 6'-8" | EM | F1 | MTL | | UNIT EXT. MECH DOOR |
| 06 | UB | 2'-6" | 6'-8" | MTE | F1 | WD | | |
| 07 | UB | 2'-0" | 6'-8" | MTE | F1 | WD | | |
| 08 | UC | 2'-0" | 6'-8" | MTE | F1 | WD | | LOUVERED AIR HANDLER |
| 09 | UC | 1'-6" | 6'-8" | MTE | F1 | WD | | LOUVERED AIR HANDLER |
| 10 | UB | 1'-6" | 6'-8" | MTE | F1 | WD | | |
| 11 | UB | 1'-4" | 6'-8" | MTE | F1 | WD | | |
| 12 | UDD | 4'-0" | 6'-8" | MTE | | WD | | SLIDING BARN DOOR |
| 13 | UBB | 5'-0" | 6'-8" | MTE | F2 | WD | | DOUBLE SWING DOOR |
| 14 | UCC | 5'-0" | 6'-8" | MTE | F2 | WD | | LOUVERED BI-FOLD |
| 15 | UCC | 6'-0" | 6'-8" | MTE | F2 | WD | | LOUVERED BI-FOLD |
| 19 | UB | 1'-9" | 6'-8" | MTE | F1 | WD | | |
| E | | 3'-0" | 7'-0" | | | | | |
| EE | | 6'-0" | 7'-0" | | | | | |
| F | | 6'-0" | 7'-0" | | | | | *RATED GLASS |

## UNIT DOOR TYPES

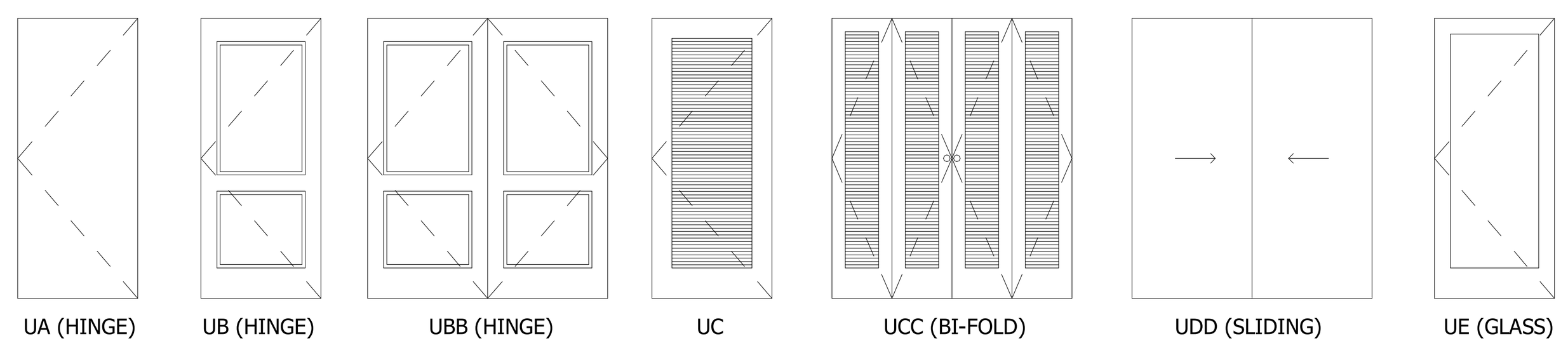


## FRAME TYPES

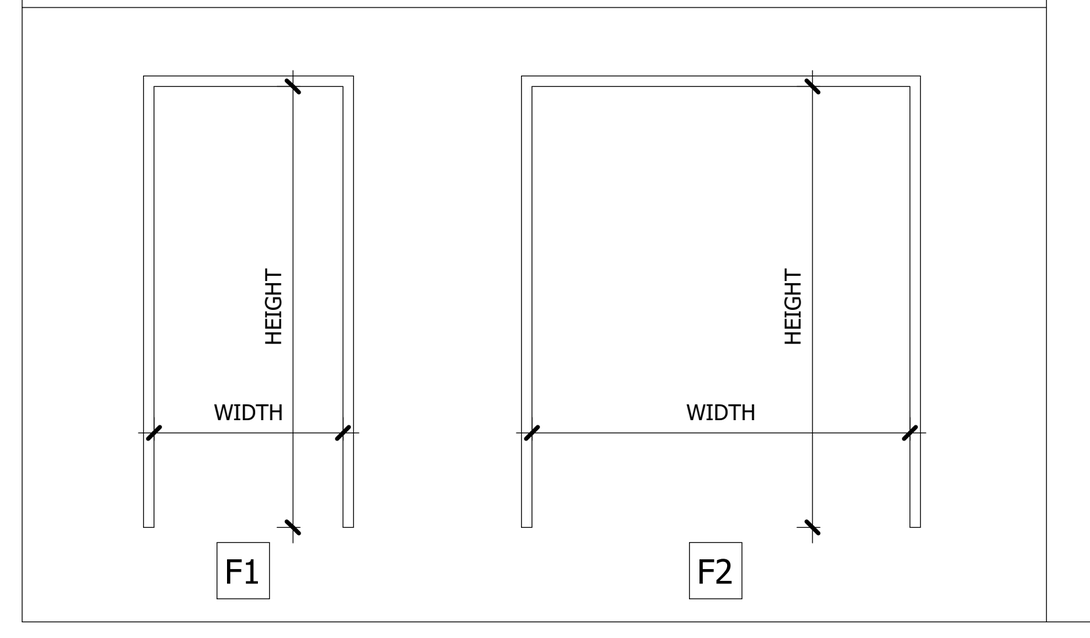


**DOOR/FRAME MATERIAL KEY:**

AL ALUMINUM
EM EXTERIOR METAL
GL GLASS
HC HOLLOW CORE
HM HOLLOW METAL
MTL METAL
SC SOLID CORE
SR STILE & RAIL
VY VINYL
WD WOOD
MTE MASONITE

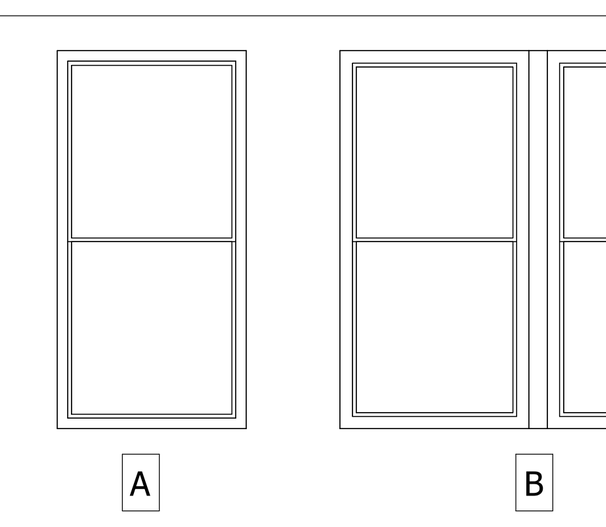


NOTE: (2) 2X6 FRT STUDS PROVIDED BETWEEN GROUP WINDOWS. (TYPICAL)
PROVIDE 4" LIMITATION FOR WINDOW LIMITERS ON ALL WINDOWS

| WINDOW SCHEDULE | | | | | |
|---|---|---|---|---|---|
| MARK | WIDTH | HEIGHT | WINDOW TYPE | CONSTRUCTI ON TYPE | COMMENTS |
| A | 3'-0" | 6'-0" | SINGLE HUNG | VINYL | All windows to be provided with opening limiters. See specifications. |
| B | 6'-3 1/2" | 6'-0" | SINGLE HUNG | VINYL | All windows to be provided with opening limiters. See specifications. |

| LIGHT FIXTURE LEGEND | |
|---|---|
| U1 | LITHONIA FMSATL-16-20840-BN; SEMI FLUSH MOUNT |
| U2 | LITHONIA FMFL-30840-SATL-BN; LINEAR FLUSH MOUNT |
| U3 | LITHONIA DFMADRL-14-F01; FMPANL-14-20840M6; LED SURFACE MOUNT DRUM |
| U4 | SATCO COVER PLATE |
| U5 | PROGRESS P300187-009-30; LED BATH VANITY |
| U6 | LITHONIA FMMUSL-9-14840-WH; LED CLOSET MUSHROOM |
| U7 | LITHONIA MDPC-BNP-M6; DGDT 1003 M6 |
| U8 | COOPER SMD6R-12-930-WH; 1200 LUMEN SLIM SURFACE (120 VOLT ONLY) |
| U9 | NUVO 62-1161; 7" LED FLUSH MOUNT DISCK |
| U10 | LITHONIA OLWPLED-P1-40K-120-PE-BZ; LED MINI WALL PACK |

**NOTES:**

1. SEE SPECIFICATIONS FOR ADDITIONAL INFORMATION.
2. ALL DOOR HARDWARE TO BE COMPLIANT WITH THE FEDERAL FAIR HOUSING ACT (FHA).
3. DOORS SHALL BE OPENABLE WITH NO MORE THAN ONE RELEASING OPERATION.
4. PROVIDE ACCESSIBLE THRESHOLDS AT ALL DOORS.
5. ALL UNITS ARE ADAPTABLE PER FHA. SEE SHEET A0.06 FOR ADDITIONAL INFORMATION.
6. ALL DIMENSIONS ARE TO ROUGH FRAMING U.N.O.
7. ALL WALLS ARE 2X4 STUDS UNLESS NOTED OTHERWISE.
8. ALL TENANT SEPERATIONS AND CORRIDOR WALLS ARE 2X6 UNLESS NOTED OTHERWISE.
9. PATIO AT FIRST FLOOR 4" BELOW UNIT FINISH FLOOR.
10. BALCONIES ARE FLUSH WITH GYPCRETE TOPPING. SEE DETAIL.
11. ALL TOILETS SET ON NEOPRENE GASKET WITH INSULATED PIPE TRAP.
12. ALL KITCHEN APPLIANCES TO HAVE STAINLESS STEEL FRONTS.
13. WHERE DRAWINGS ARE IN CONFLICT WITH OTHER DRAWINGS, CONTRACTOR SHALL NOTIFY THE ARCHITECT.
14. PROVIDE BLOCKING FOR GRAB BARS IN ALL BATHROOMS
15. DIMENSION TO STUD UNLESS OTHERWISE NOTED
16. DIMESNION TO FINISH @ CABINETS
17. PROVIDE BLOCKING FOR TV WALL MOUNT, CENTER AT 60" A.F.F.
18. ALL BATHROOM VANITES ARE 21" IN DEPTH

| UNIT PLAN AND INTERIOR ELEVATION KEYNOTES | |
|---|---|
| Number | Description |
| 1 | WASHER |
| 2 | DRYER |
| 3 | RANGE / OVEN |
| 4 | REFRIGERATOR |
| 5 | DISHWASHER |
| 6 | KITCHEN SINK / FAUCET |
| 7 | TOILET |
| 8 | VANITY - SEE ELEVATION FOR SIZE |
| 9 | 30"X60" TUB |
| 10 | 36"X60" SHOWER BASE |
| 11 | 32"X60" SHOWER BASE |
| 12 | ACCESSIBLE THRESHOLD - MARBLE |
| 13 | ACCESSIBLE THRESHOLD - ALUMINIUM |
| 14 | SOFFIT OVER REFRIGERATOR AND BEHIND CABINET |
| 15 | LINEN SHELVES (5) PER SPECIFICATION |
| 16 | WIRE SHEVLING |
| 17 | KNEE WALL BELOW COUNTERTOP |
| 18 | BALCONY RAILING @ 42" HIGH |
| 19 | WALL MOUNTED HOT WATER HEATER |
| 20 | HVAC UNIT MOUNTED ON WALL |
| 21 | PRE ROCK BEHIND BATHING FIXTURES |
| 22 | CUBBIE CABINETS |
| 23 | MICROWAVE WITH RECIRCULATION HOOD |
| 24 | WALL TILE BETWEEN CONTERTOP AND WALL CABINET. SEE 1D DRAWING |
| 25 | BLOCKING FOR GRAB BAR. SEE FIG. 4- SHEET A0.06 |
| 26 | 24" HORIZONTAL GRAB BAR @ TUB BACK WALL. SEE FIG. 4 - SHEET A0.06 |
| 27 | SHOWER ROD |
| 28 | NOT USED |
| 29 | PAINTED FRAME MIRROR |
| 30 | TOILET TISSUE HOLDER @ 26" A.F.F. |
| 31 | 30" TOWEL BAR |
| 32 | ROBE HOOK |
| 33 | SHOWER HEAD |
| 34 | VANITY SINK BOWL |

| ROOM FINISH MATERIAL CODE | |
|---|---|
| CPT | CARPET |
| CT | CERAMIC TILE |
| CONC | CONCRETE |
| GWB | GYPSUM WALL BOARD |
| MR GWB | MOISTURE RESISTANT GWB |
| V | SHEET VINYL |
| VWP | VINYL WOOD PLANK |
| VCT | VINYL COMPOSITE TILE |
| WD | WOOD |

## ROOM FINISH SCHEDULE

| SPACE | FLOOR | WALL | CEILING | HEIGHT | REMARKS |
|---|---|---|---|---|---|
| KITCHEN | 3 | A | 1 | 9'-0" | |
| LIVING RM. | 3 | A | 1 | 9'-0" | |
| BEDROOMS | 1 | A | 1 | 9'-0" | |
| DEN | 3 | A | 1 | 9'-0" | |
| BATHS | 4 | B/C | 2 | 9'-0" | |
| CLOSETS | | A | 1 | 9'-0" | FLOORING: MATCH ADJ. |
| LAUNDRY | 3 | A | 2 | 9'-0" | FLOORING: MATCH ADJ. |
| UNIT-HVAC | | A | 1 | 9'-0" | FL.: GYPCRETE PAINT-LIGHT GRAY |

## MATERIAL CODE

| FLR. / BASE | | WALL | | CEILING | |
|---|---|---|---|---|---|
| 1 | CPT / WD | A | G.W.B. | 1 | G.W.B. |
| 2 | | B | MR.G.W.B. | 2 | MR.G.W.B. |
| 3 | LVT / WD | C | CT-2 | 3 | |
| 4 | CT / CT | D | | 4 | |
| 5 | | E | | 5 | |
| 6 | | F | | 6 | |
| 7 | | G | | 7 | |
| 8 | | H | | 8 | |

MATERIAL GLOSSARY

CPT CARPET - SHAW GULF WINDS - COLOR: 532 MINERAL
CT-1 CERAMIC TILE - 12X24 FLORIM MATERIA - COLOR: HONED 02
CT-2 CERAMIC TILE - 12X24 FLORIM MATERIA - COLOR: STONE CALACATTA
G.W.B. GYPSUM WALL BOARD
MR.G.W.B. MOISTURE RESISTANT G.W.B.
LVT VINYL WOOD PLANK - SHAW TERRAIN 12 MIL - COLOR: 766 ECHO
WD. WOOD

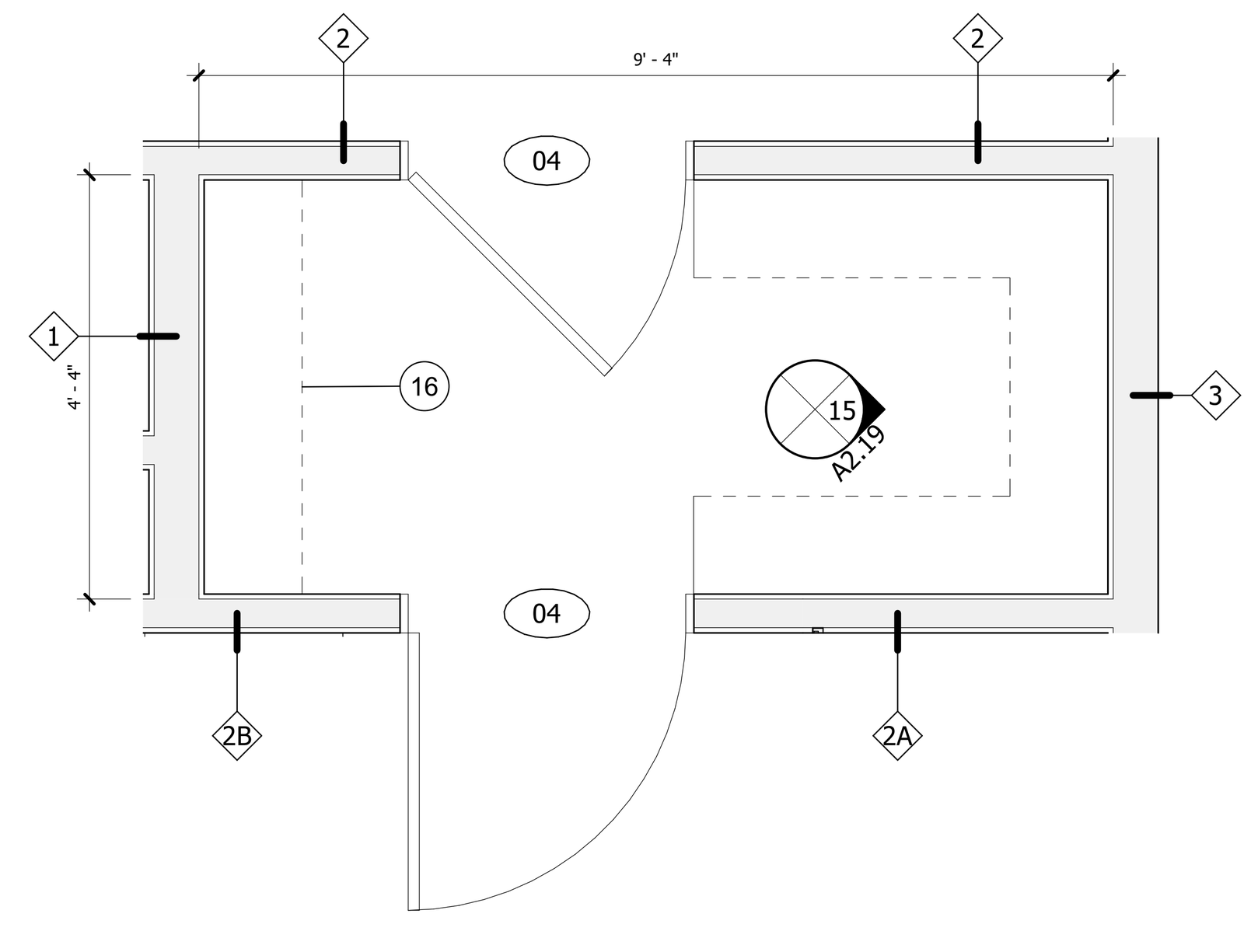


13 UNIT C - CLOSET 1 - PLAN
SCALE : 1/2" = 1'-0"

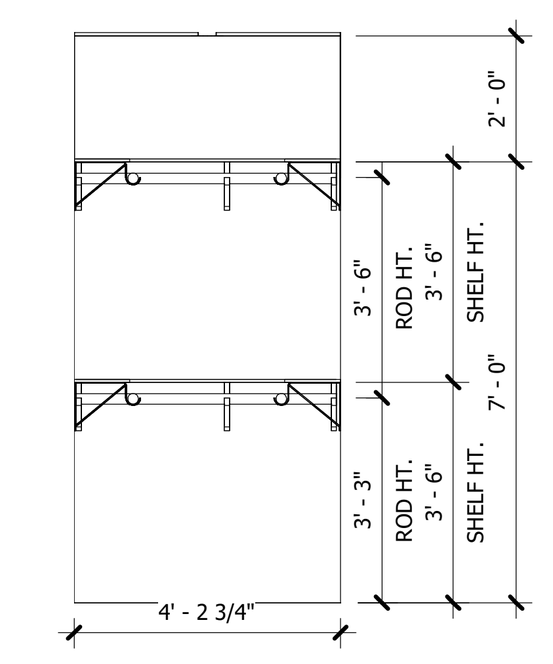


15 UNIT C - CLOSET 1 - ELEV 2
SCALE : 1/4" = 1'-0"

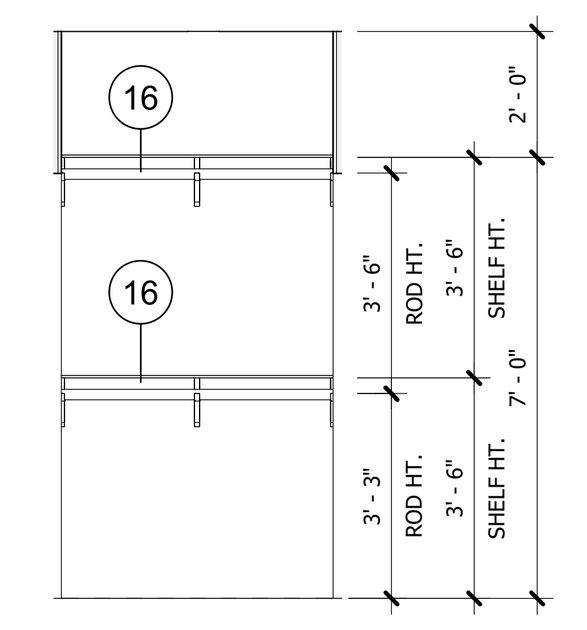


14 UNIT C - CLOSET 1 - ELEV 1
SCALE : 1/4" = 1'-0"

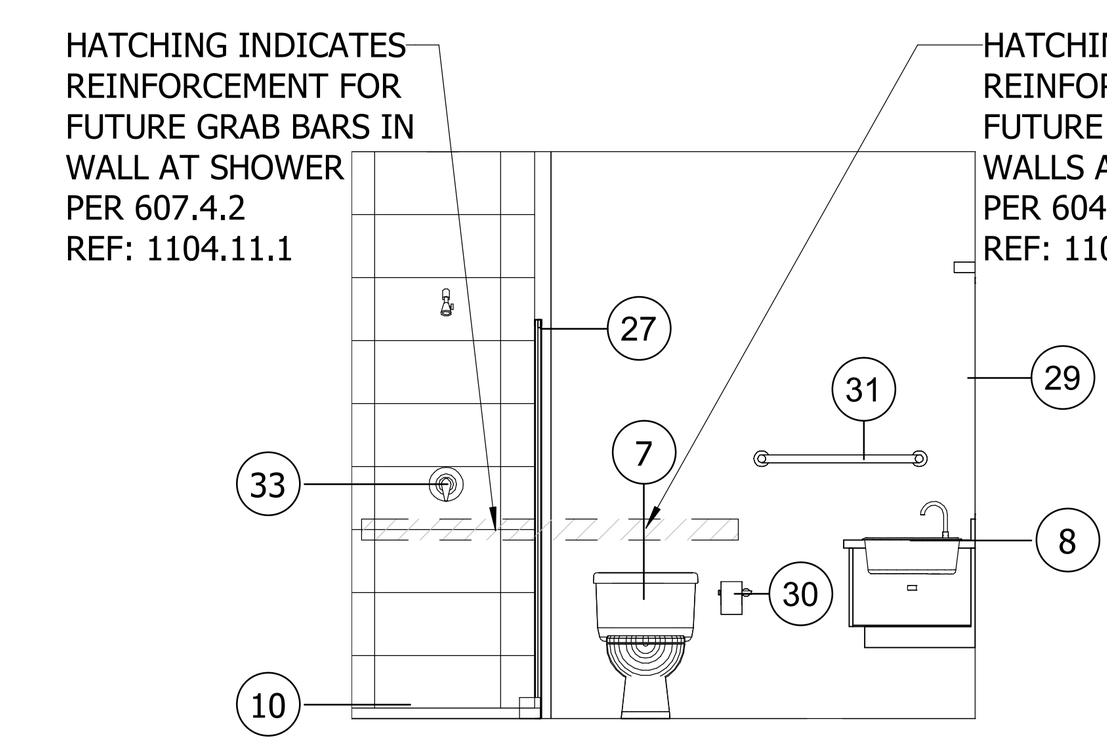


11 UNIT C - BATHROOM 2 - ELEV 2
SCALE : 1/4" = 1'-0"

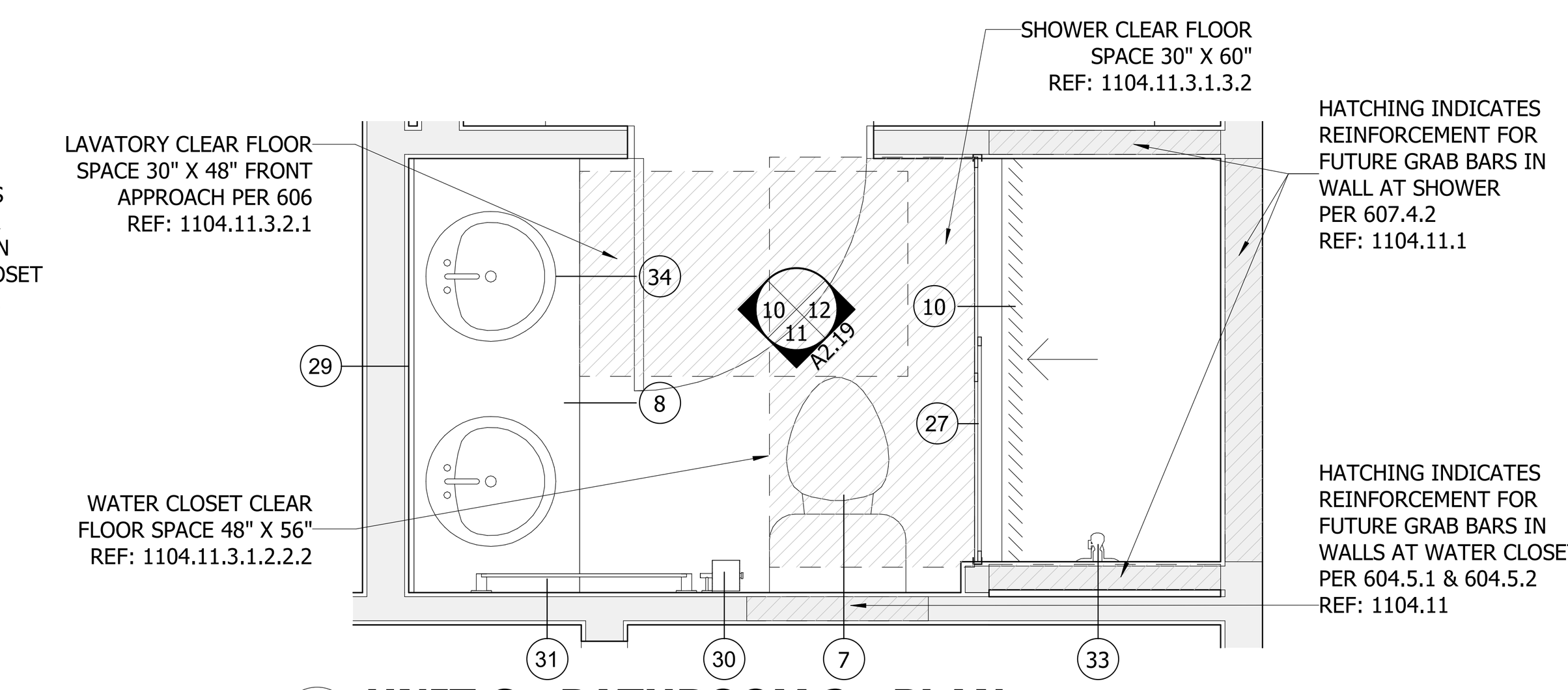


3 UNIT C - BATHROOM 2 - PLAN
SCALE : 1/2" = 1'-0"

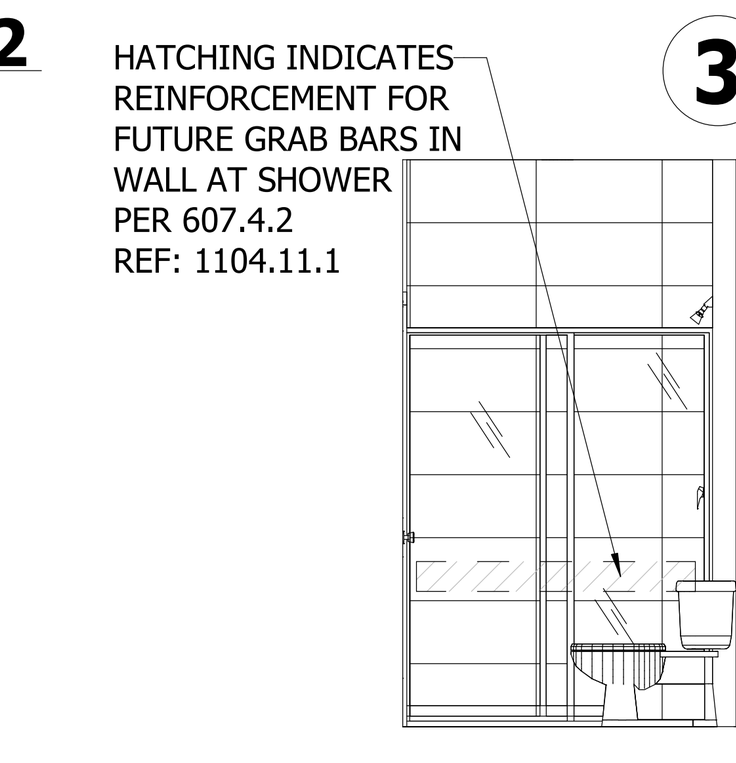


12 UNIT C - BATHROOM 2 - ELEV 3
SCALE : 1/4" = 1'-0"

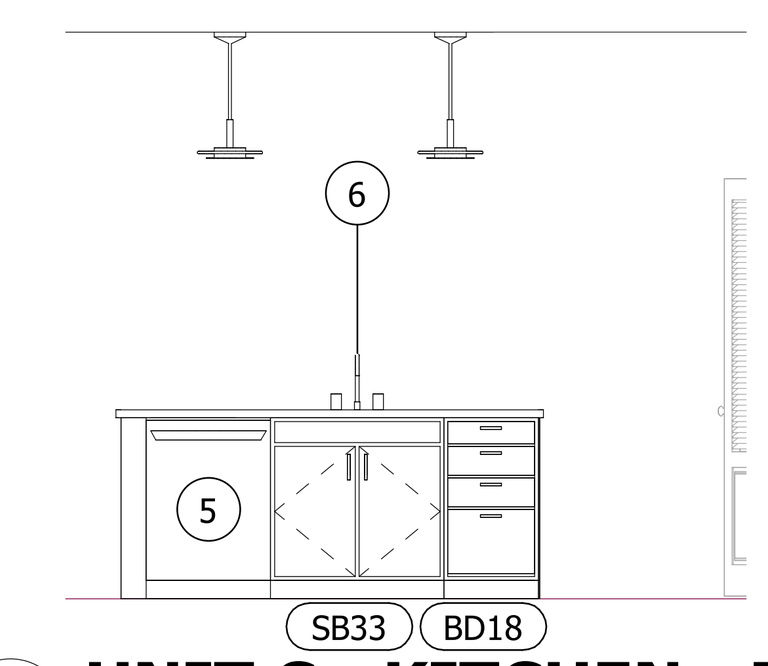


7 UNIT C - KITCHEN - ELEV 3
SCALE : 1/4" = 1'-0"

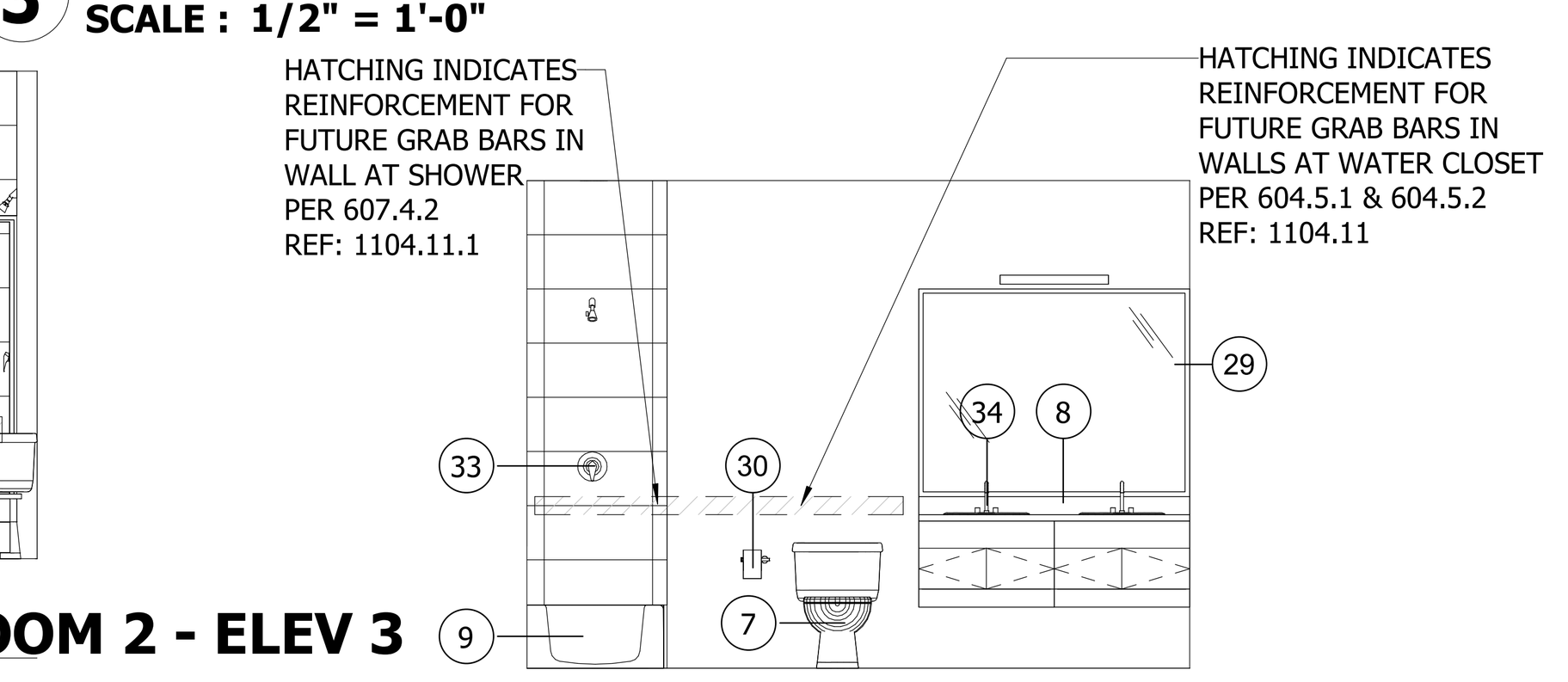


8 UNIT C - BATHROOM 1 - ELEV 2
SCALE : 1/4" = 1'-0"

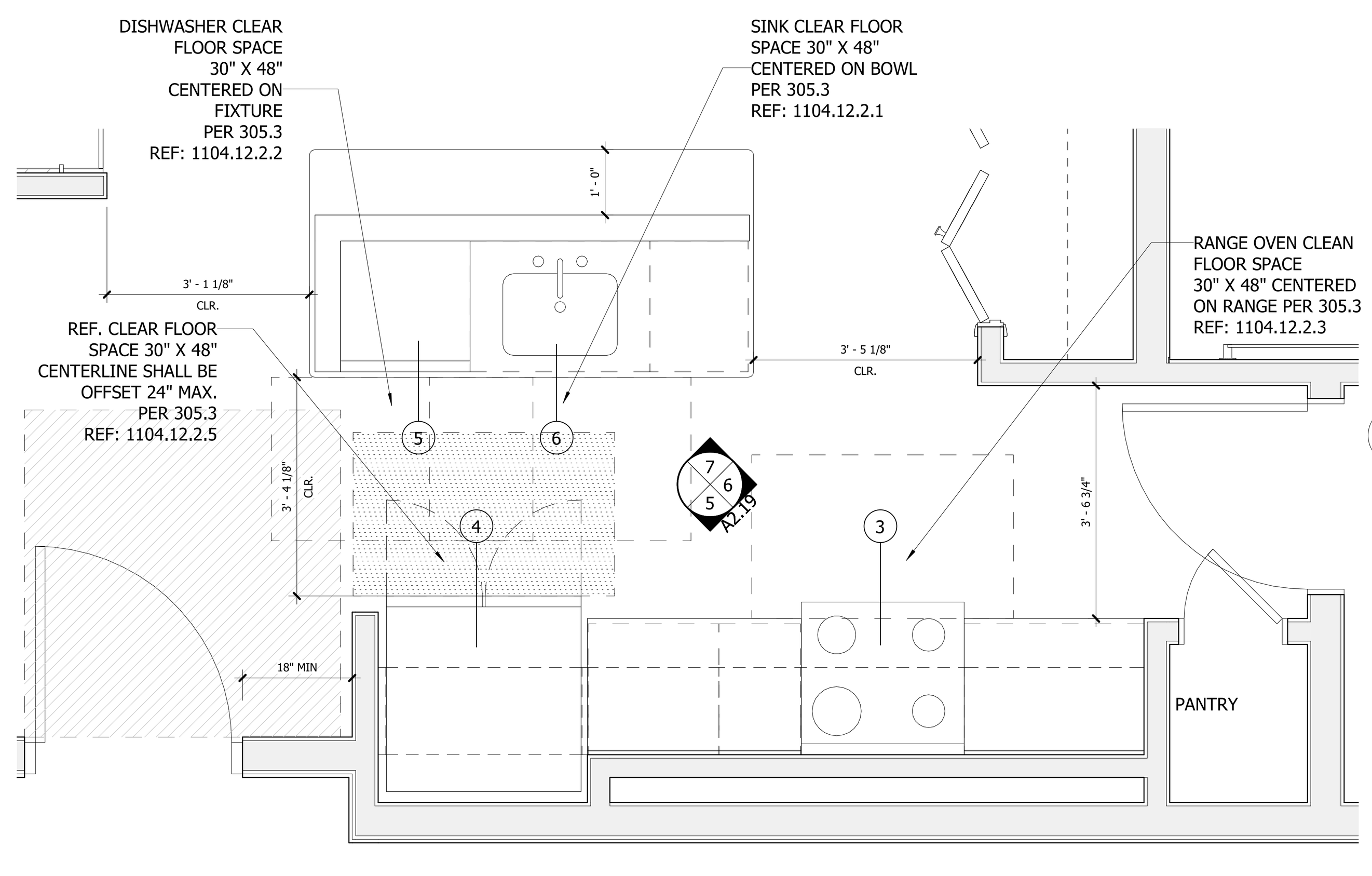


4 UNIT C - KITCHEN - PLAN
SCALE : 1/2" = 1'-0"

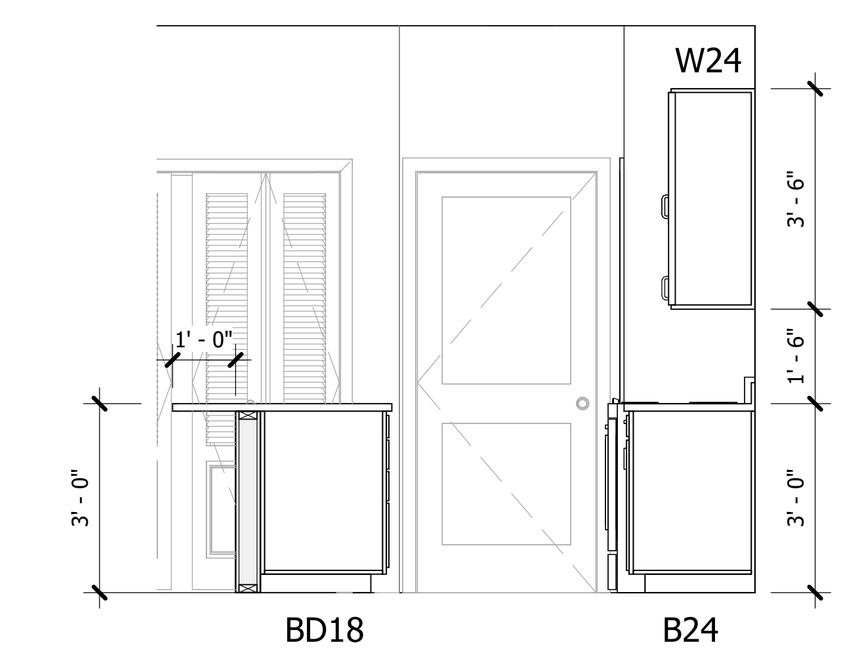


6 UNIT C - KITCHEN - ELEV 2
SCALE : 1/4" = 1'-0"

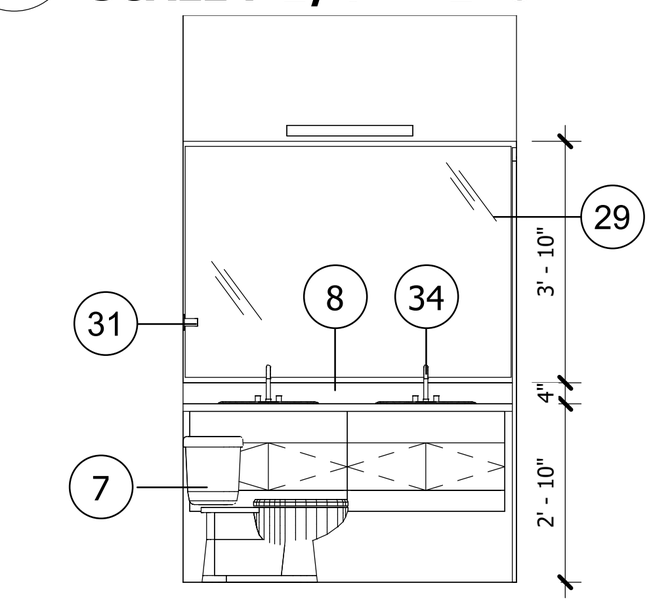

10 UNIT C - BATHROOM 2 - ELEV 1
SCALE : 1/4" = 1'-0"

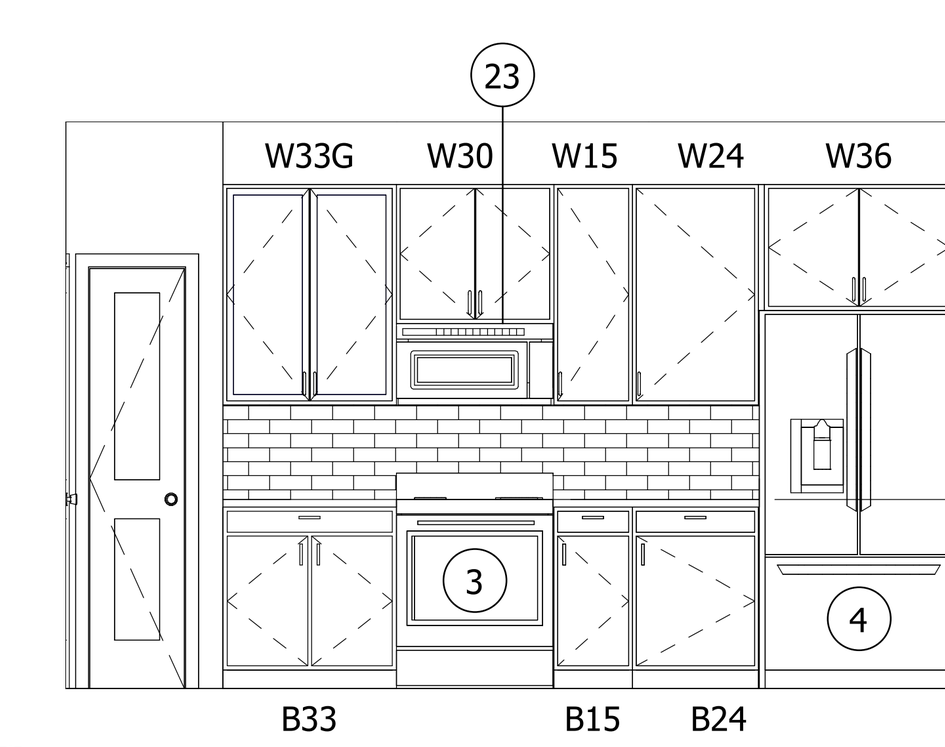


5 UNIT C - KITCHEN - ELEV 1
SCALE : 1/4" = 1'-0"

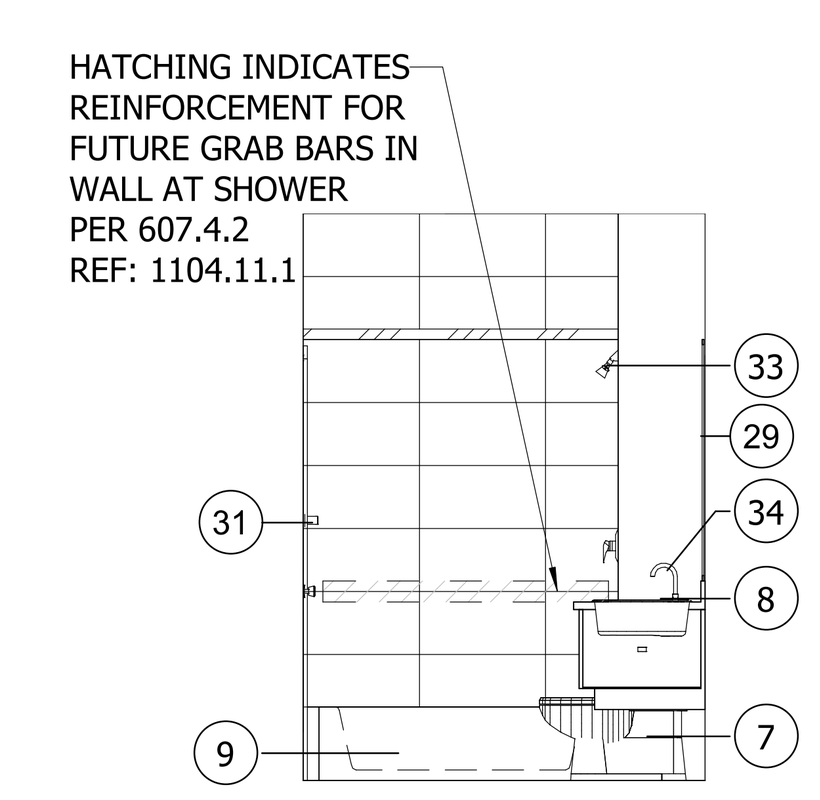


9 UNIT C - BATHROOM 1 - ELEV 1
SCALE : 1/4" = 1'-0"

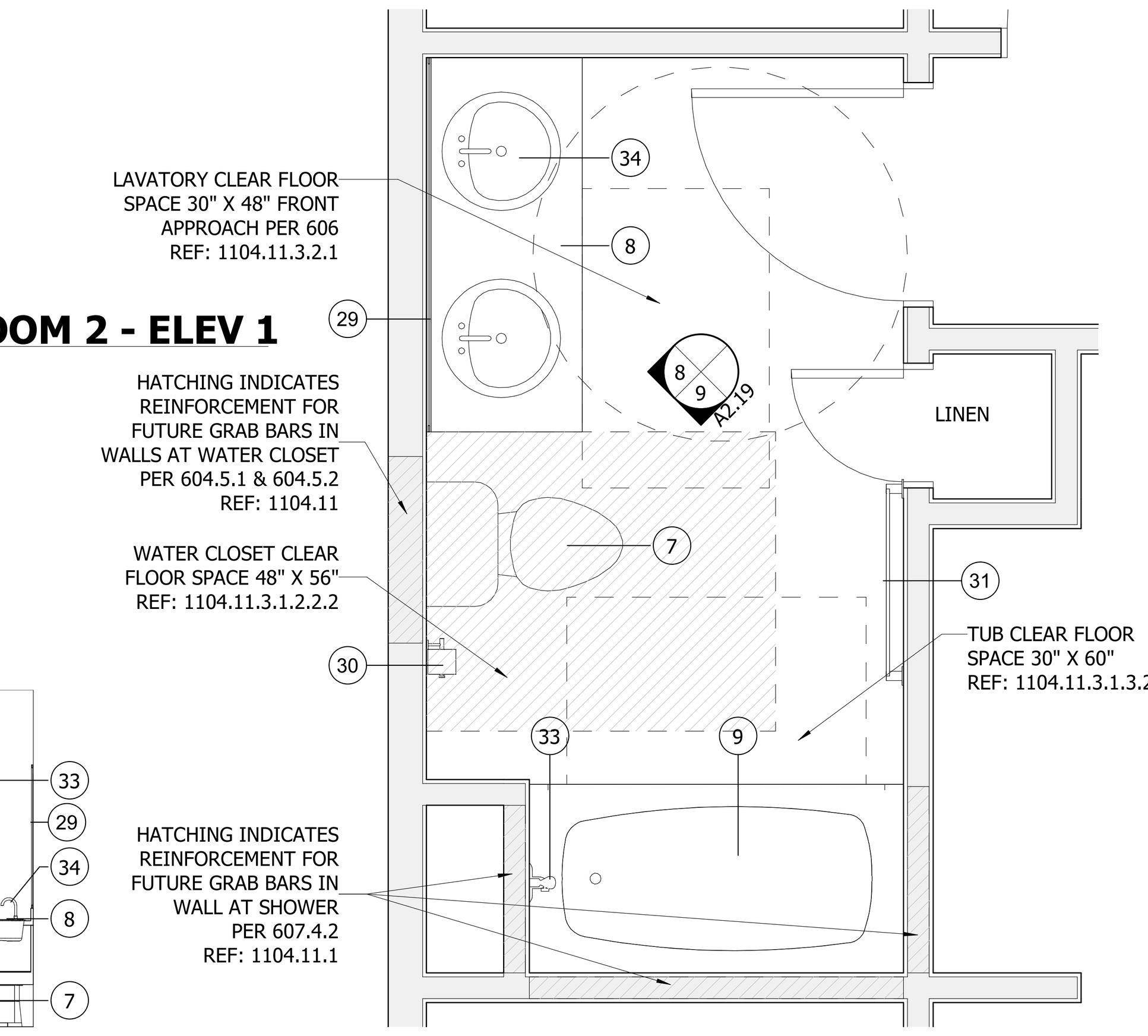


2 UNIT C - BATHROOM 1 - PLAN
SCALE : 1/2" = 1'-0"

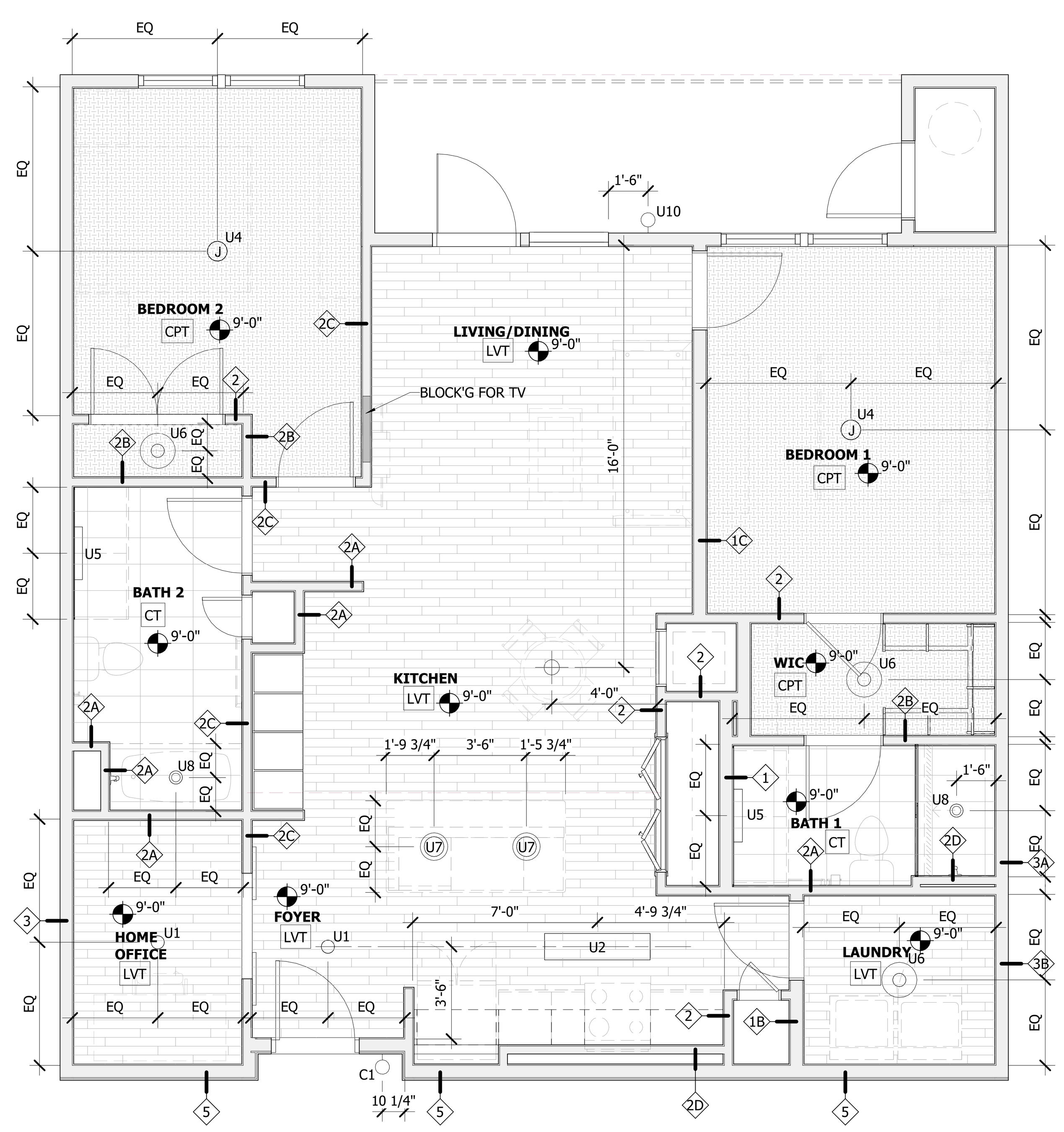


1A UNIT C RCP
SCALE : 1/4" = 1'-0"

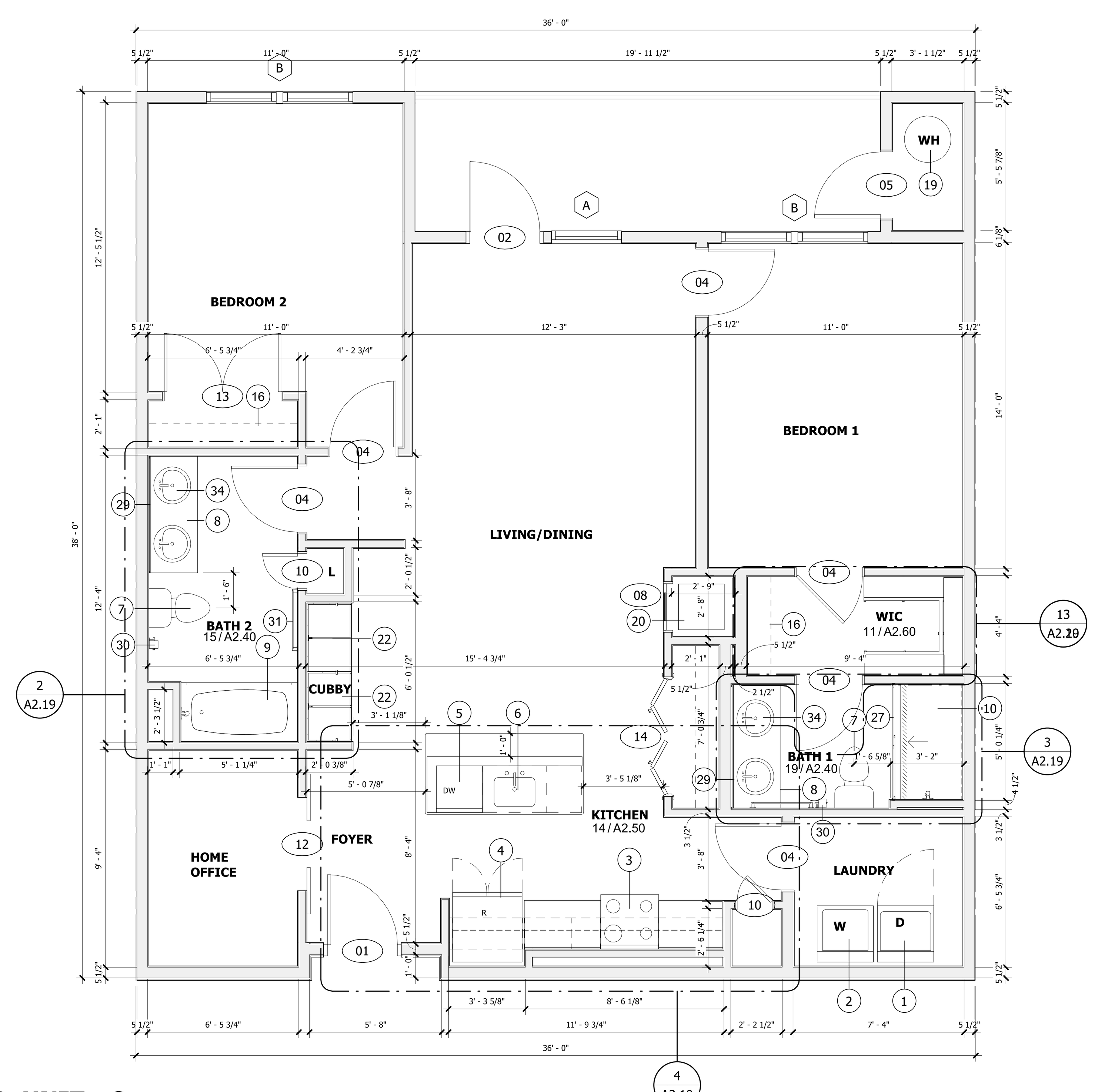


1 UNIT - C
SCALE : 1/4" = 1'-0"

| Unit-C | 1,242 SF |
|---|---|

| ROOM # |
|---|
| UNIT C |
| 120 |
| 134 |
| 138 |
| 139 |
| 146 |
| 148 |
| 153 |
| 220 |
| 227 |
| 228 |
| 231 |
| 234 |
| 238 |
| 239 |
| 246 |
| 248 |
| 253 |
| 320 |
| 327 |
| 328 |
| 331 |
| 334 |
| 338 |
| 339 |
| 346 |
| 348 |
| 353 |
| 420 |
| 427 |
| 428 |
| 431 |
| 434 |
| 438 |
| 439 |
| 446 |
| 448 |
| 453 |
| Grand total: 37 |

ALL REPORTS, PLANS, SPECIFICATIONS AND COMPUTER FILES RELATING TO THIS PROJECT ARE THE PROPERTY OF THE MARTIN ARCHITECTURAL GROUP. THE MARTIN ARCHITECTURAL GROUP RETAINS ALL COMMON LAW, STATUTE AND OTHER RESERVED RIGHTS INCLUDING THE COPYRIGHT THERETO. REPRODUCTION OF THE MATERIAL HEREIN OR SUBSTANTIAL USE WITHOUT WRITTEN PERMISSION OF THE MARTIN ARCHITECTURAL GROUP VIOLATES THE COPYRIGHT LAWS OF THE UNITED STATES AND WILL BE SUBJECT TO LEGAL PROSECUTION.
©2022, The Martin Architectural Group, P.C.

THE MARTIN ARCHITECTURAL GROUP, P.C.
ARCHITECTS AND LAND PLANNERS
A PROFESSIONAL CORPORATION
240 NORTH 22ND STREET, PHILADELPHIA, PA, 19103
P (215) 665-1080 F (215) 561-5064

| | |
|---|---|
| P.A.: | DREW ROMANIC |
| P.M.: | JASON DECAMPLI |
| DRAWN BY: | MAG |
| PROJECT NO: | 1362-12 |

| NO. | REVISION | DATE |
|---|---|---|
| 1 | PERMIT SET | 12/20/22 |

UNIT PLANS (UNIT C)
**Granite Run Apartment 02**
MIDDLETOWN TOWNSHIP, PA

| | |
|---|---|
| SCALE: | AS NOTED |
| DATE: | 12/31/2017 |

# A2.19

©2022, The Martin Architectural Group, P.C.

Printed: 1/13/2023 4:30:31 PM

## DOOR SCHEDULE - DWELLING UNIT

| MARK | DOOR TYPE | WIDTH | HEIGHT | DOOR MATERIAL | FRAME TYPE | FRAME MATERIAL | FIRE RATING | REMARKS |
|---|---|---|---|---|---|---|---|---|
| 01 | UA | 3'-0" | 7'-0" | MTL | F1 | MTL | 20 min. | UNIT ENTRY - SPRING HINGES |
| 02 | UE | 3'-0" | 7'-0" | VY | F1 | VY | | BALCONY DOOR |
| 03 | UB | 3'-0" | 6'-8" | MTE | F1 | WD | | |
| 04 | UB | 2'-10" | 6'-8" | MTE | F1 | WD | | |
| 05 | UA | 2'-10" | 6'-8" | EM | F1 | MTL | | UNIT EXT. MECH DOOR |
| 06 | UB | 2'-6" | 6'-8" | MTE | F1 | WD | | |
| 07 | UB | 2'-0" | 6'-8" | MTE | F1 | WD | | |
| 08 | UC | 2'-0" | 6'-8" | MTE | F1 | WD | | LOUVERED AIR HANDLER |
| 09 | UC | 1'-6" | 6'-8" | MTE | F1 | WD | | LOUVERED AIR HANDLER |
| 10 | UB | 1'-6" | 6'-8" | MTE | F1 | WD | | |
| 11 | UB | 1'-4" | 6'-8" | MTE | F1 | WD | | |
| 12 | UDD | 4'-0" | 6'-8" | MTE | | WD | | SLIDING BARN DOOR |
| 13 | UBB | 5'-0" | 6'-8" | MTE | F2 | WD | | DOUBLE SWING DOOR |
| 14 | UCC | 5'-0" | 6'-8" | MTE | F2 | WD | | LOUVERED BI-FOLD |
| 15 | UCC | 6'-0" | 6'-8" | MTE | F2 | WD | | LOUVERED BI-FOLD |
| 19 | UB | 1'-9" | 6'-8" | MTE | F1 | WD | | |
| E | | 3'-0" | 7'-0" | | | | | |
| EE | | 6'-0" | 7'-0" | | | | | |
| F | | 6'-0" | 7'-0" | | | | | *RATED GLASS |

## UNIT DOOR TYPES

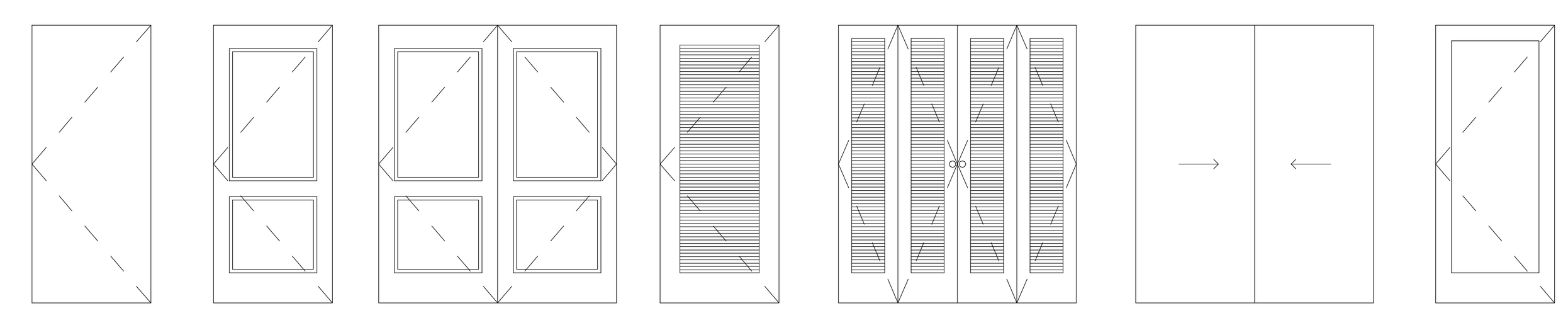


## FRAME TYPES

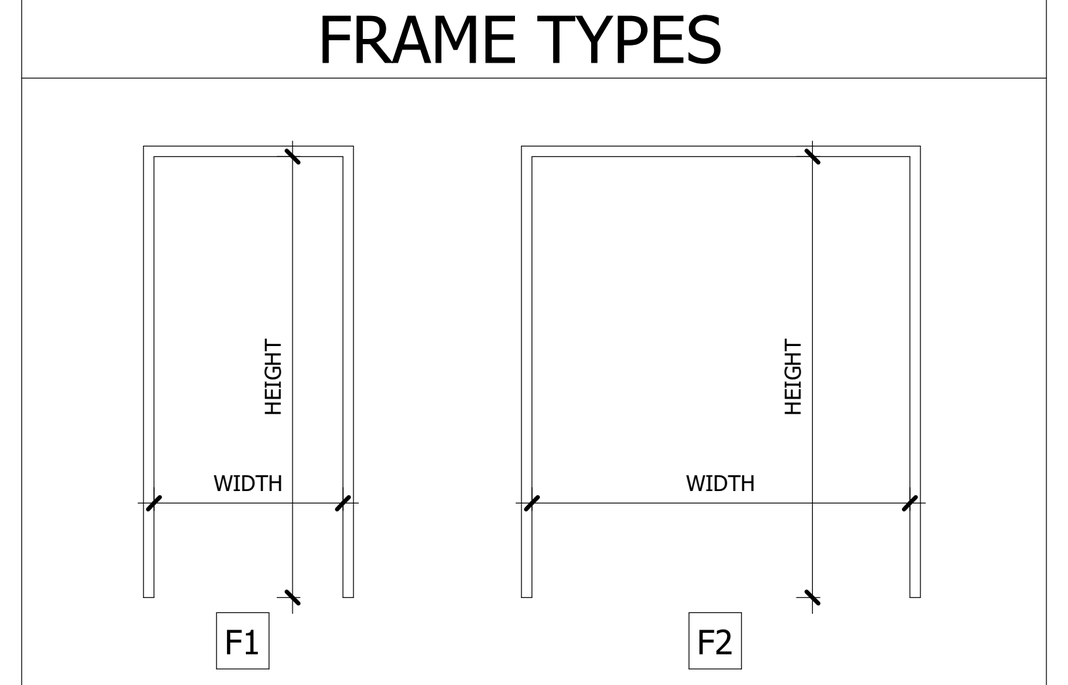


**DOOR/FRAME MATERIAL KEY:**

| | |
|---|---|
| AL | ALUMINUM |
| EM | EXTERIOR METAL |
| GL | GLASS |
| HC | HOLLOW CORE |
| HM | HOLLOW METAL |
| MTL | METAL |
| SC | SOLID CORE |
| SR | STILE & RAIL |
| VY | VINYL |
| WD | WOOD |
| MTE | MASONITE |

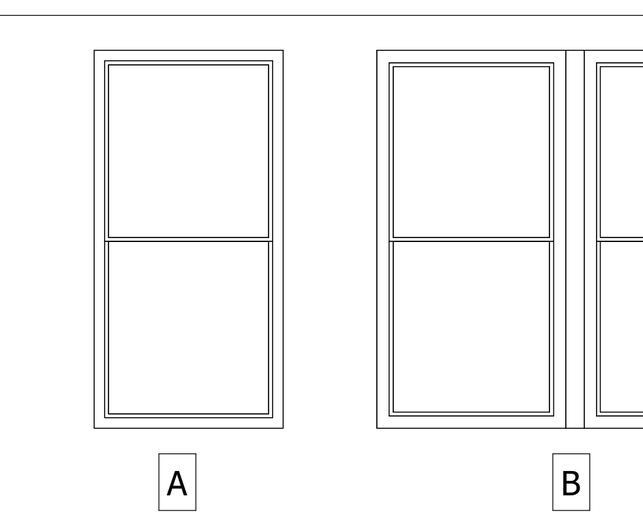


NOTE: (2) 2X6 FRT STUDS PROVIDED BETWEEN GROUP WINDOWS. (TYPICAL) PROVIDE 4" LIMITATION FOR WINDOW LIMITERS ON ALL WINDOWS

## WINDOW SCHEDULE

| MARK | WIDTH | HEIGHT | WINDOW TYPE | CONSTRUCTION TYPE | COMMENTS |
|---|---|---|---|---|---|
| A | 3'-0" | 6'-0" | SINGLE HUNG | VINYL | All windows to be provided with opening limiters. See specifications. |
| B | 6'-3 1/2" | 6'-0" | SINGLE HUNG | VINYL | All windows to be provided with opening limiters. See specifications. |

## LIGHT FIXTURE LEGEND

| | |
|---|---|
| U1 | LITHONIA FMSATL-16-20840-BN; SEMI FLUSH MOUNT |
| U2 | LITHONIA FMFL-30840-SATL-BN; LINEAR FLUSH MOUNT |
| U3 | LITHONIA DFMADRL-14-F01; FMPANL-14-20840M6; LED SURFACE MOUNT DRUM |
| U4 | SATCO COVER PLATE |
| U5 | PROGRESS P300187-009-30; LED BATH VANITY |
| U6 | LITHONIA FMMUSL-9-14840-WH; LED CLOSET MUSHROOM |
| U7 | LITHONIA MDPC-BNP-M6; DGDT 1003 M6 |
| U8 | COOPER SMD6R-12-930-WH; 1200 LUMEN SLIM SURFACE (120 VOLT ONLY) |
| U9 | NUVO 62-1161; 7" LED FLUSH MOUNT DISCK |
| U10 | LITHONIA OLWPLED-P1-40K-120-PE-BZ; LED MINI WALL PACK |

**NOTES:**

1. SEE SPECIFICATIONS FOR ADDITIONAL INFORMATION.
2. ALL DOOR HARDWARE TO BE COMPLIANT WITH THE FEDERAL FAIR HOUSING ACT (FHA).
3. DOORS SHALL BE OPENABLE WITH NO MORE THAN ONE RELEASING OPERATION.
4. PROVIDE ACCESSIBLE THRESHOLDS AT ALL DOORS.
5. ALL UNITS ARE ADAPTABLE PER FHA. SEE SHEET A0.06 FOR ADDITIONAL INFORMATION.
6. ALL DIMENSIONS ARE TO ROUGH FRAMING U.N.O.
7. ALL WALLS ARE 2X4 STUDS UNLESS NOTED OTHERWISE.
8. ALL TENANT SEPERATIONS AND CORRIDOR WALLS ARE 2X6 UNLESS NOTED OTHERWISE.
9. PATIO AT FIRST FLOOR 4" BELOW UNIT FINISH FLOOR.
10. BALCONIES ARE FLUSH WITH GYPCRETE TOPPING. SEE DETAIL.
11. ALL TOILETS SET ON NEOPRENE GASKET WITH INSULATED PIPE TRAP.
12. ALL KITCHEN APPLIANCES TO HAVE STAINLESS STEEL FRONTS.
13. WHERE DRAWINGS ARE IN CONFLICT WITH OTHER DRAWINGS, CONTRACTOR SHALL NOTIFY THE ARCHITECT.
14. PROVIDE BLOCKING FOR GRAB BARS IN ALL BATHROOMS
15. DIMENSION TO STUD UNLESS OTHERWISE NOTED
16. DIMESNION TO FINISH @ CABINETS
17. PROVIDE BLOCKING FOR TV WALL MOUNT, CENTER AT 60" A.F.F.
18. ALL BATHROOM VANITES ARE 21" IN DEPTH

## UNIT PLAN AND INTERIOR ELEVATION KEYNOTES

| Number | Description |
|---|---|
| 1 | WASHER |
| 2 | DRYER |
| 3 | RANGE / OVEN |
| 4 | REFRIGERATOR |
| 5 | DISHWASHER |
| 6 | KITCHEN SINK / FAUCET |
| 7 | TOILET |
| 8 | VANITY - SEE ELEVATION FOR SIZE |
| 9 | 30"X60" TUB |
| 10 | 36"X60" SHOWER BASE |
| 11 | 32"X60" SHOWER BASE |
| 12 | ACCESSIBLE THRESHOLD - MARBLE |
| 13 | ACCESSIBLE THRESHOLD - ALUMINIUM |
| 14 | SOFFIT OVER REFRIGERATOR AND BEHIND CABINET |
| 15 | LINEN SHELVES (5) PER SPECIFICATION |
| 16 | WIRE SHEVLING |
| 17 | KNEE WALL BELOW COUNTERTOP |
| 18 | BALCONY RAILING @ 42" HIGH |
| 19 | WALL MOUNTED HOT WATER HEATER |
| 20 | HVAC UNIT MOUNTED ON WALL |
| 21 | PRE ROCK BEHIND BATHING FIXTURES |
| 22 | CUBBIE CABINETS |
| 23 | MICROWAVE WITH RECIRCULATION HOOD |
| 24 | WALL TILE BETWEEN CONTERTOP AND WALL CABINET. SEE 1D DRAWING |
| 25 | BLOCKING FOR GRAB BAR. SEE FIG. 4- SHEET A0.06 |
| 26 | 24" HORIZONTAL GRAB BAR @ TUB BACK WALL. SEE FIG. 4 - SHEET A0.06 |
| 27 | SHOWER ROD |
| 28 | NOT USED |
| 29 | PAINTED FRAME MIRROR |
| 30 | TOILET TISSUE HOLDER @ 26" A.F.F. |
| 31 | 30" TOWEL BAR |
| 32 | ROBE HOOK |
| 33 | SHOWER HEAD |
| 34 | VANITY SINK BOWL |

## ROOM FINISH MATERIAL CODE

| | |
|---|---|
| CPT | CARPET |
| CT | CERAMIC TILE |
| CONC | CONCRETE |
| GWB | GYPSUM WALL BOARD |
| MR GWB | MOISTURE RESISTANT GWB |
| V | SHEET VINYL |
| VWP | VINYL WOOD PLANK |
| VCT | VINYL COMPOSITE TILE |
| WD | WOOD |

## ROOM FINISH SCHEDULE

| SPACE | FLOOR | WALL | CEILING | HEIGHT | REMARKS |
|---|---|---|---|---|---|
| KITCHEN | 3 | A | 1 | 9'-0" | |
| LIVING RM. | 3 | A | 1 | 9'-0" | |
| BEDROOMS | 1 | A | 1 | 9'-0" | |
| DEN | 3 | A | 1 | 9'-0" | |
| BATHS | 4 | B/C | 2 | 9'-0" | |
| CLOSETS | | A | 1 | 9'-0" | FLOORING: MATCH ADJ. |
| LAUNDRY | 3 | A | 2 | 9'-0" | FLOORING: MATCH ADJ. |
| UNIT-HVAC | | A | 1 | 9'-0" | FL.: GYPCRETE PAINT-LIGHT GRAY |

### MATERIAL CODE

| FLR. / BASE | | WALL | | CEILING | |
|---|---|---|---|---|---|
| 1 | CPT / WD | A | G.W.B. | 1 | G.W.B. |
| 2 | | B | MR.G.W.B. | 2 | MR.G.W.B. |
| 3 | LVT / WD | C | CT-2 | 3 | |
| 4 | CT / CT | D | | 4 | |
| 5 | | E | | 5 | |
| 6 | | F | | 6 | |
| 7 | | G | | 7 | |
| 8 | | H | | 8 | |

MATERIAL GLOSSARY

| | |
|---|---|
| CPT | CARPET - SHAW GULF WINDS - COLOR: 532 MINERAL |
| CT-1 | CERAMIC TILE - 12X24 FLORIM MATERIA - COLOR: HONED 02 |
| CT-2 | CERAMIC TILE - 12X24 FLORIM MATERIA - COLOR: STONE CALACATTA |
| G.W.B. | GYPSUM WALL BOARD |
| MR.G.W.B. | MOISTURE RESISTANT G.W.B. |
| LVT | VINYL WOOD PLANK - SHAW TERRAIN 12 MIL - COLOR: 766 ECHO |
| WD. | WOOD |

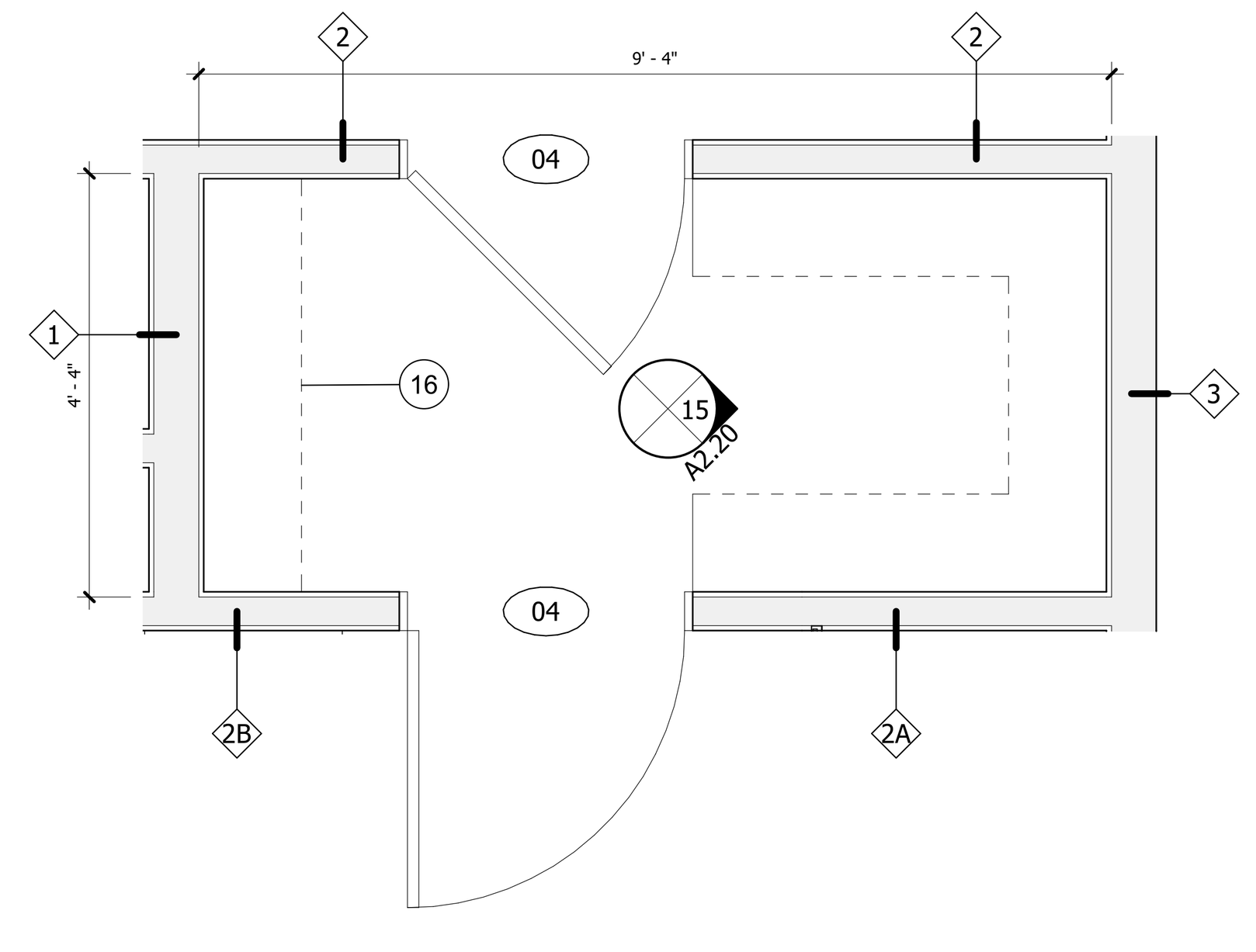

13 UNIT C(FW1) - CLOSET - PLAN
SCALE : 1/2" = 1'-0"

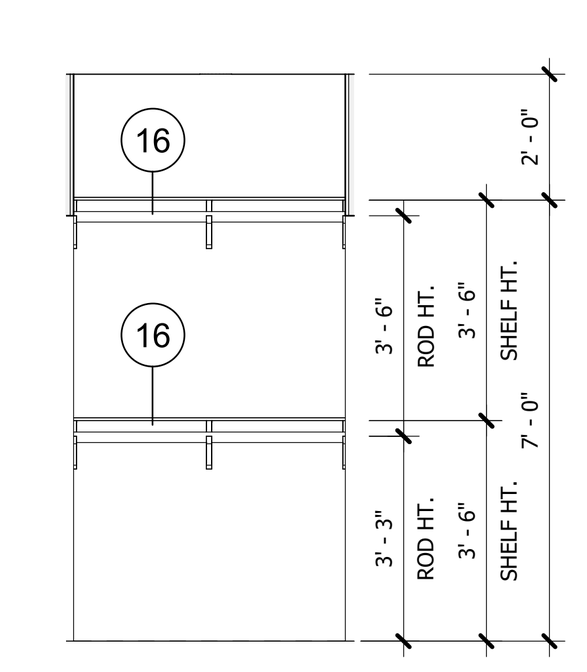

14 UNIT C(FW1) - CLOSET - ELEV 1
SCALE : 1/4" = 1'-0"

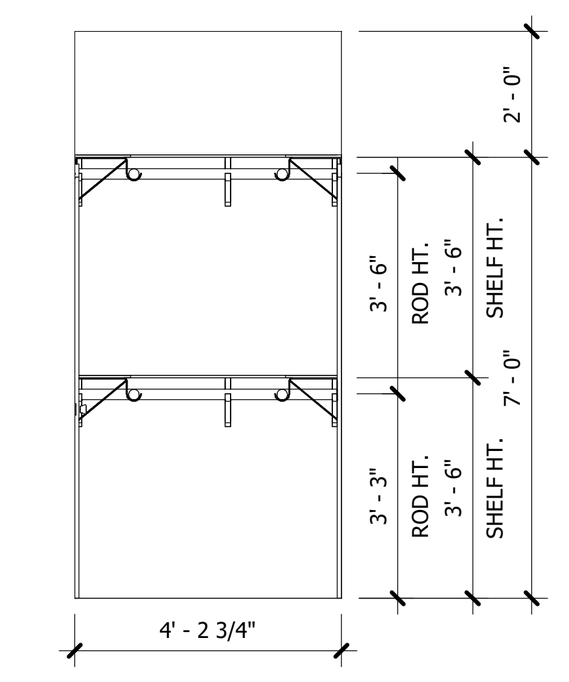

15 UNIT C(FW1) - CLOSET - ELEV 2
SCALE : 1/4" = 1'-0"

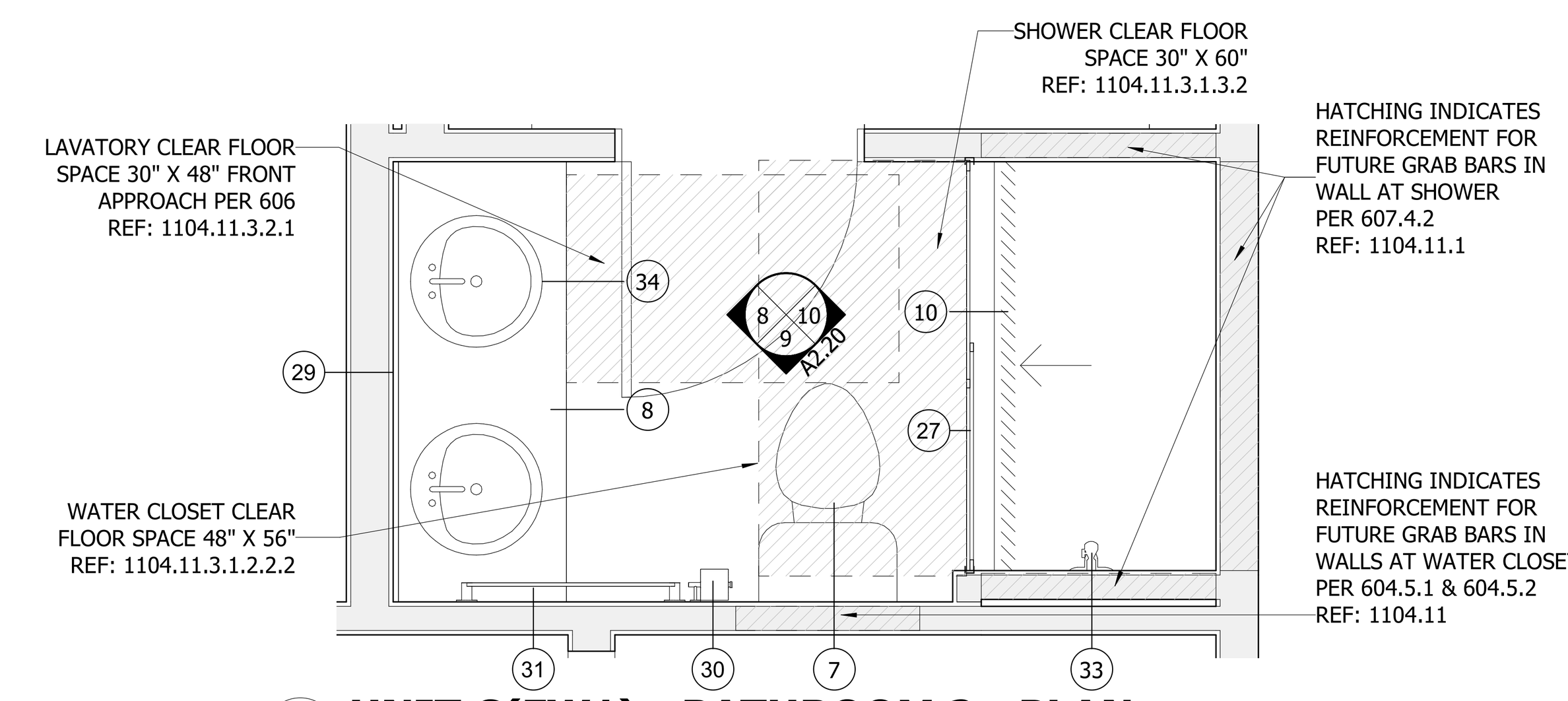


4 UNIT C(FW1) - BATHROOM 2 - PLAN
SCALE : 1/2" = 1'-0"

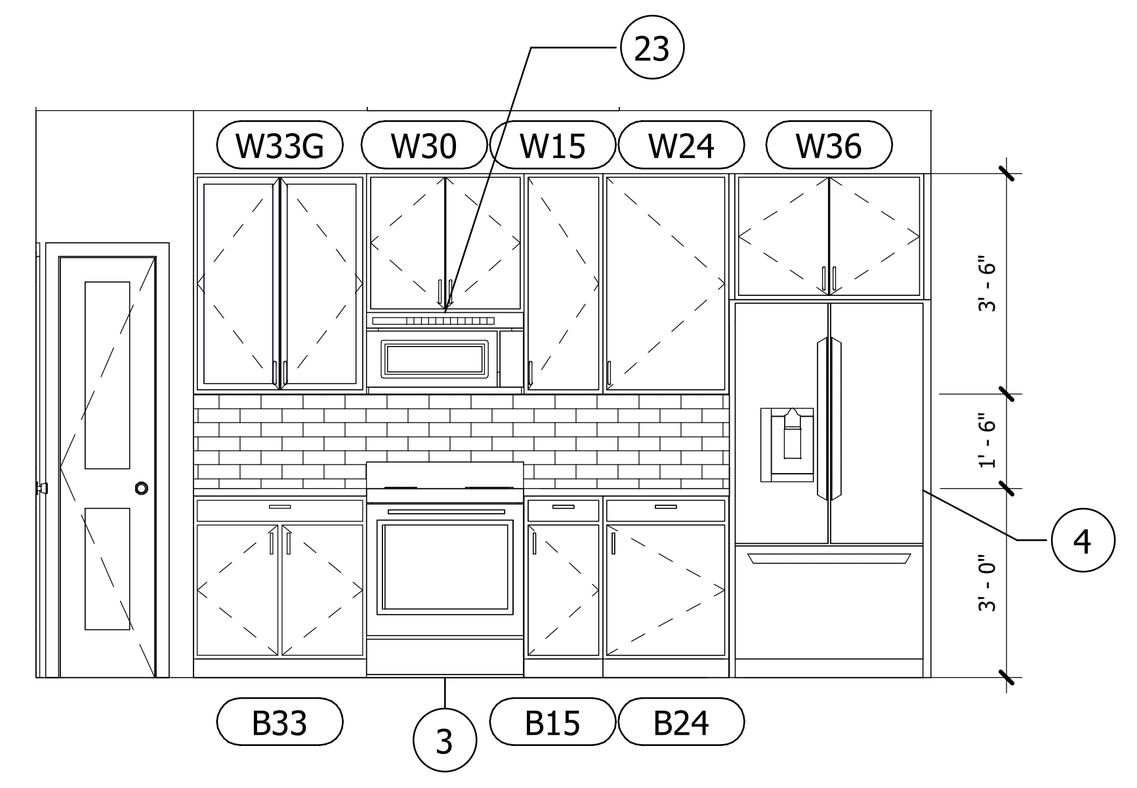

11 UNIT C(FW1) - KITCHEN - ELEV 1
SCALE : 1/4" = 1'-0"

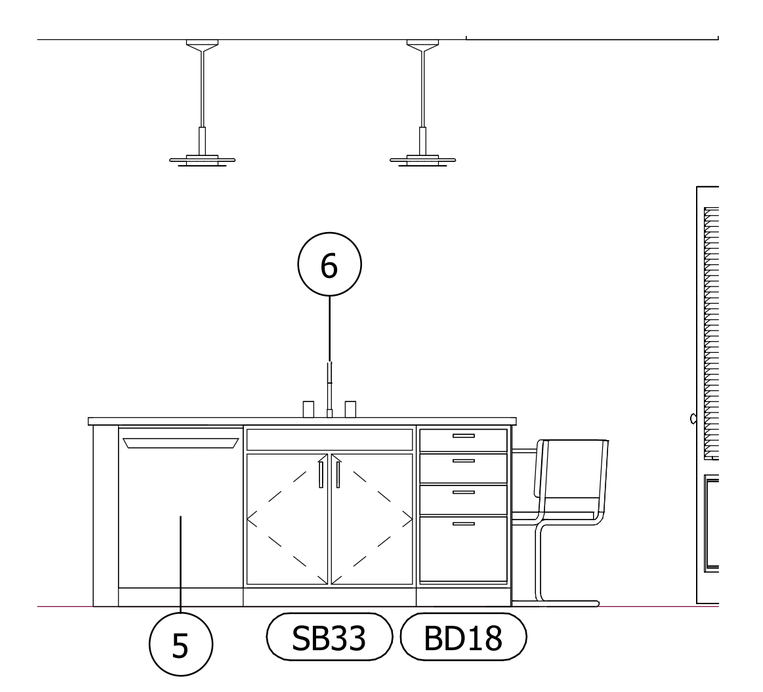

12 UNIT C(FW1) - KITCHEN - ELEV 2
SCALE : 1/4" = 1'-0"

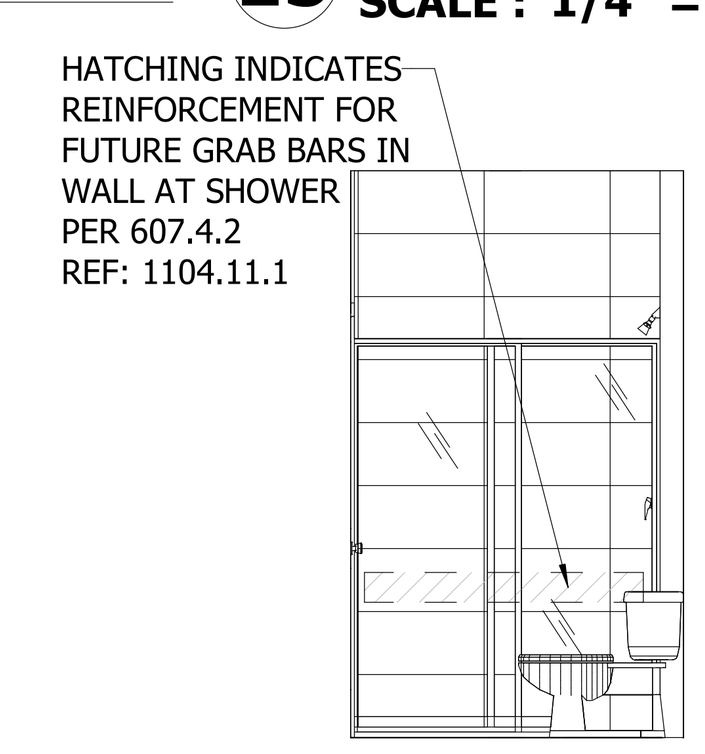


10 UNIT C(FW1) - BATHROOM 2 - ELEV 3
SCALE : 1/4" = 1'-0"

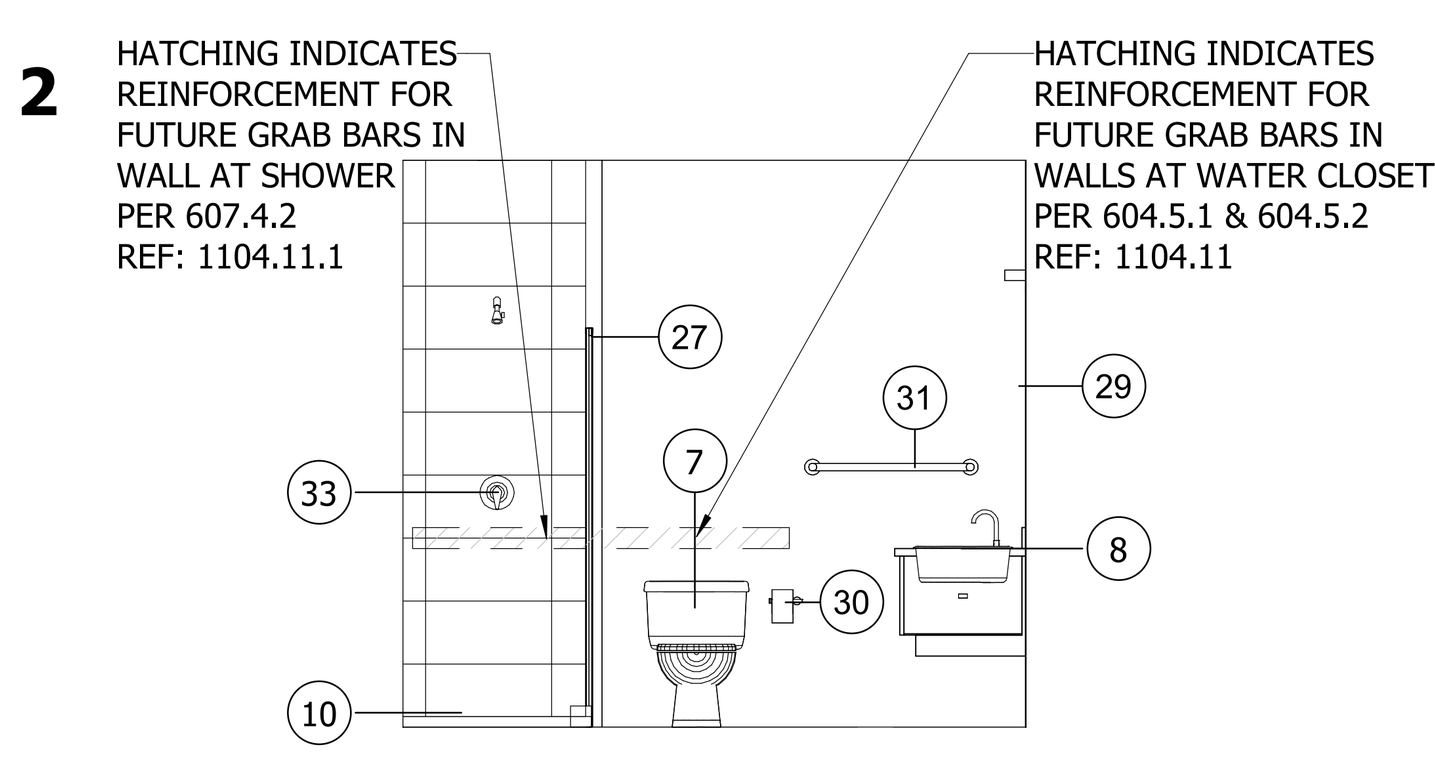


9 UNIT C(FW1) - BATHROOM 2 - ELEV 2
SCALE : 1/4" = 1'-0"

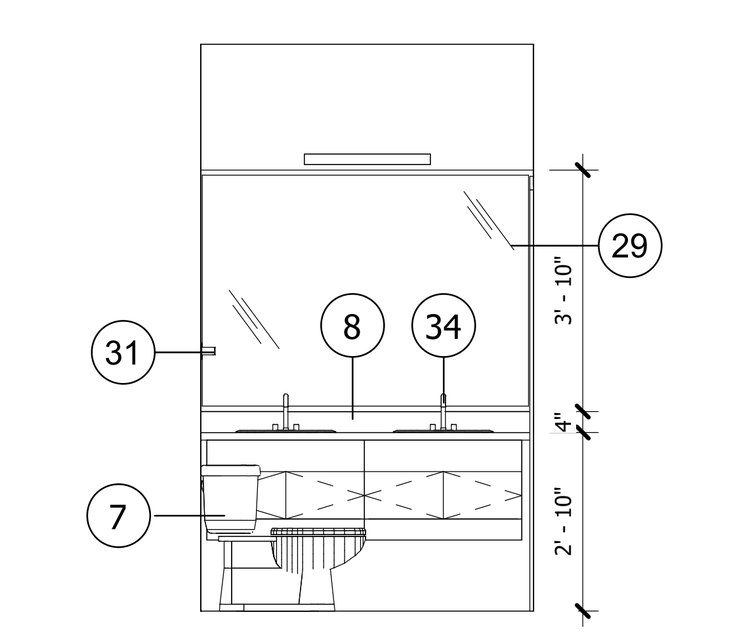

8 UNIT C(FW1) - BATHROOM 2 - ELEV 1
SCALE : 1/4" = 1'-0"

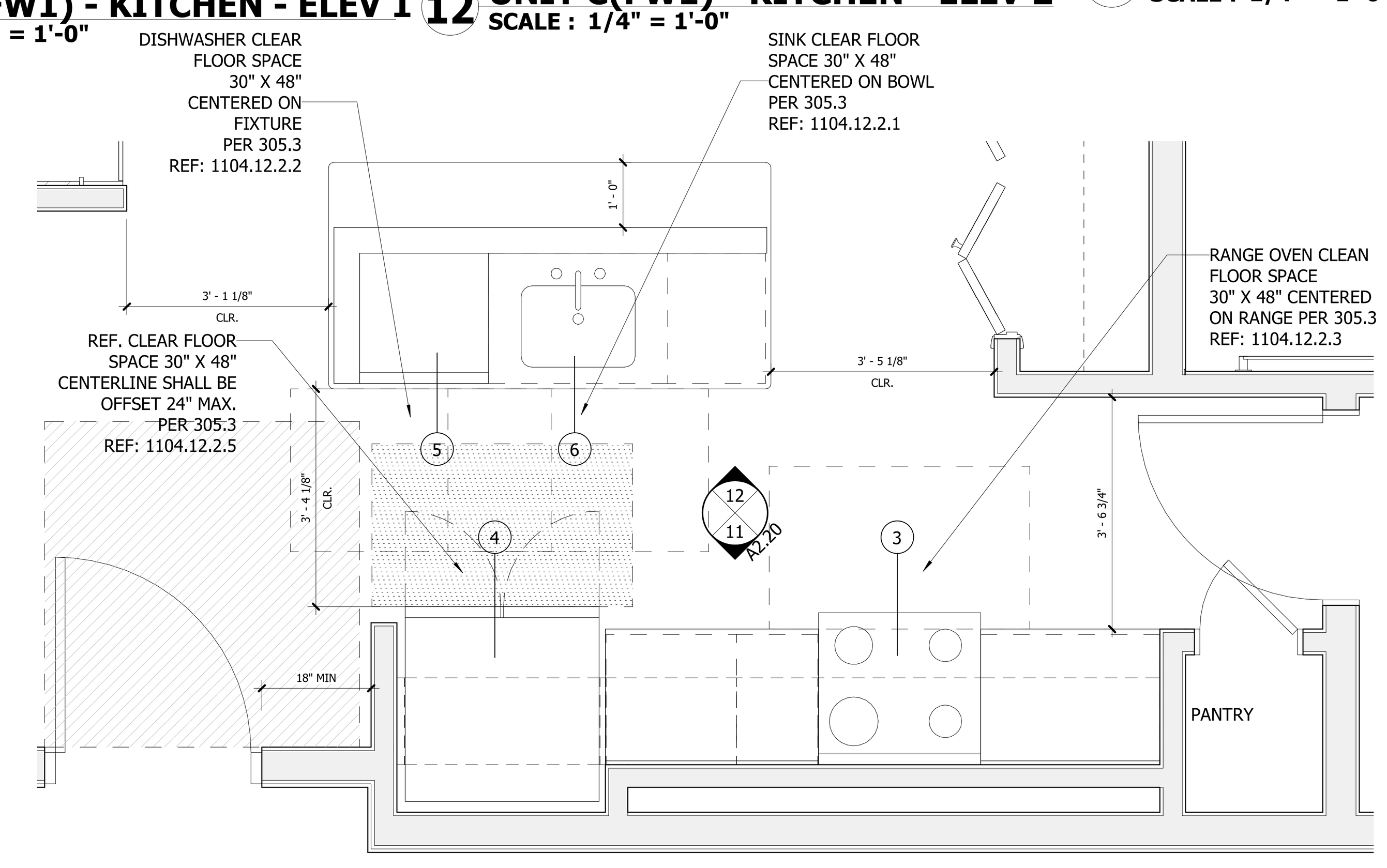


5 UNIT C(FW1) - KITCHEN - PLAN
SCALE : 1/2" = 1'-0"

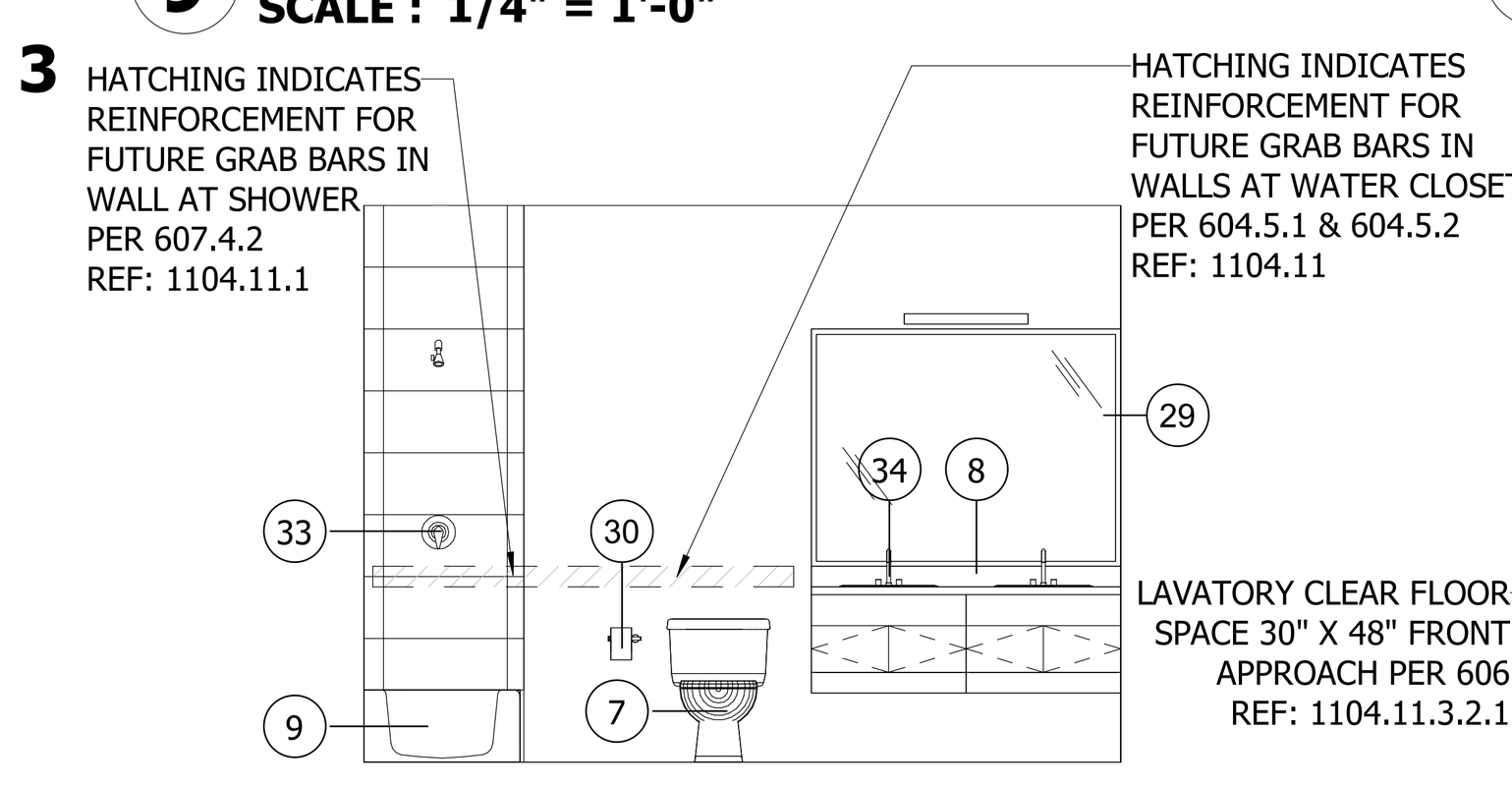


7 UNIT C(FW1) - BATHROOM 1 - ELEV 2
SCALE : 1/4" = 1'-0"

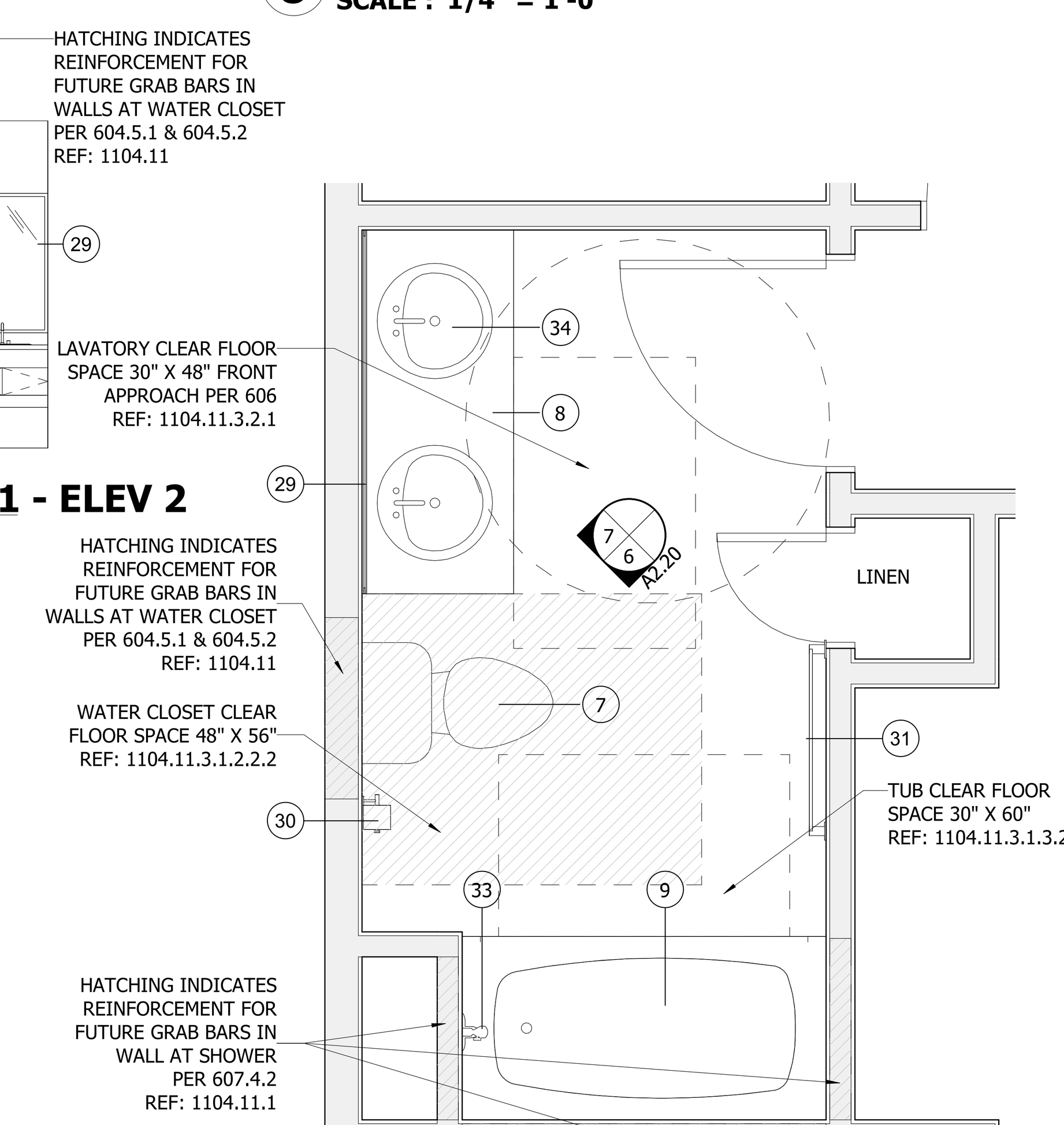


3 UNIT C(FW1) - BATHROOM 1 - PLAN
SCALE : 1/2" = 1'-0"

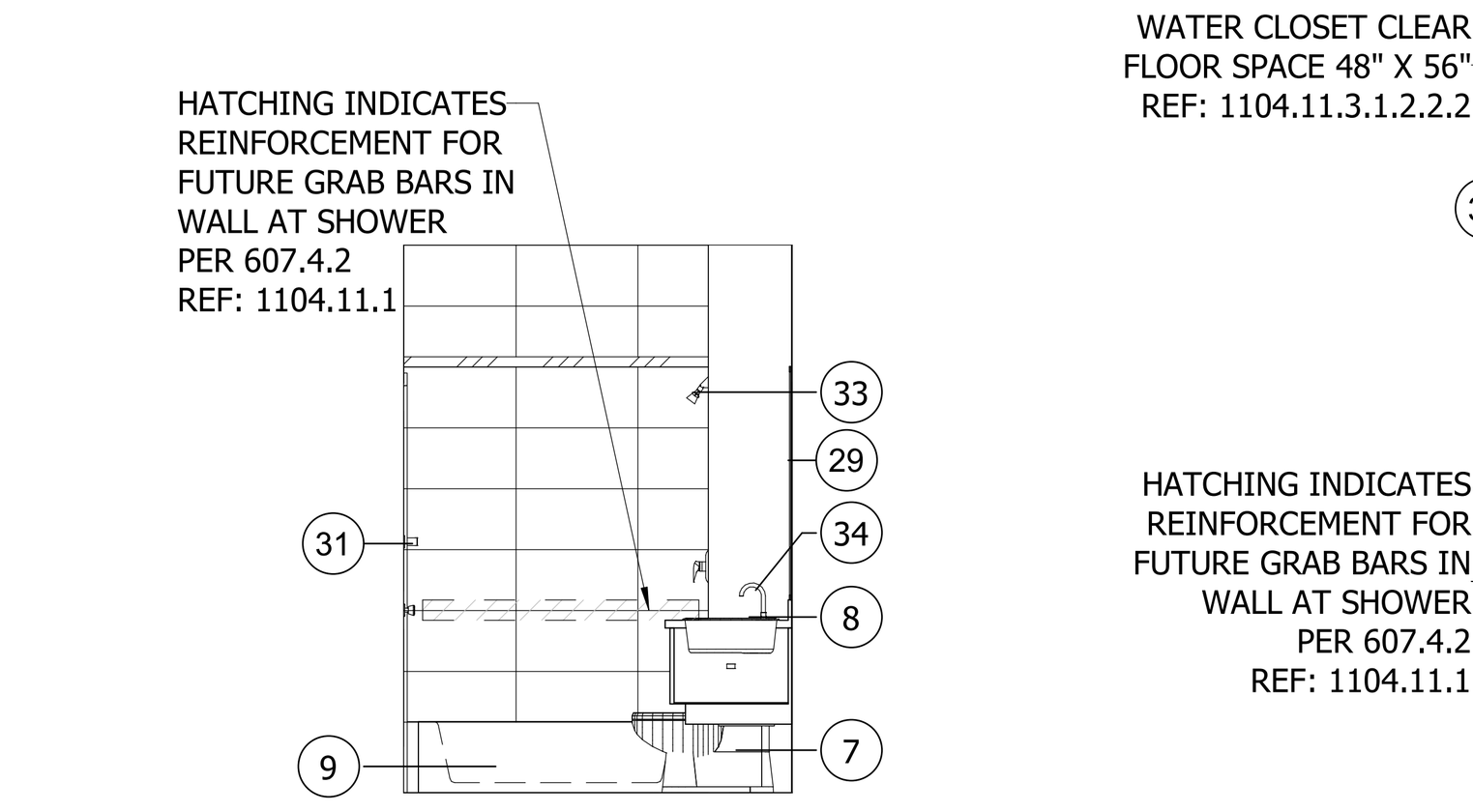


6 UNIT C(FW1) - BATHROOM 1 - ELEV 1
SCALE : 1/4" = 1'-0"

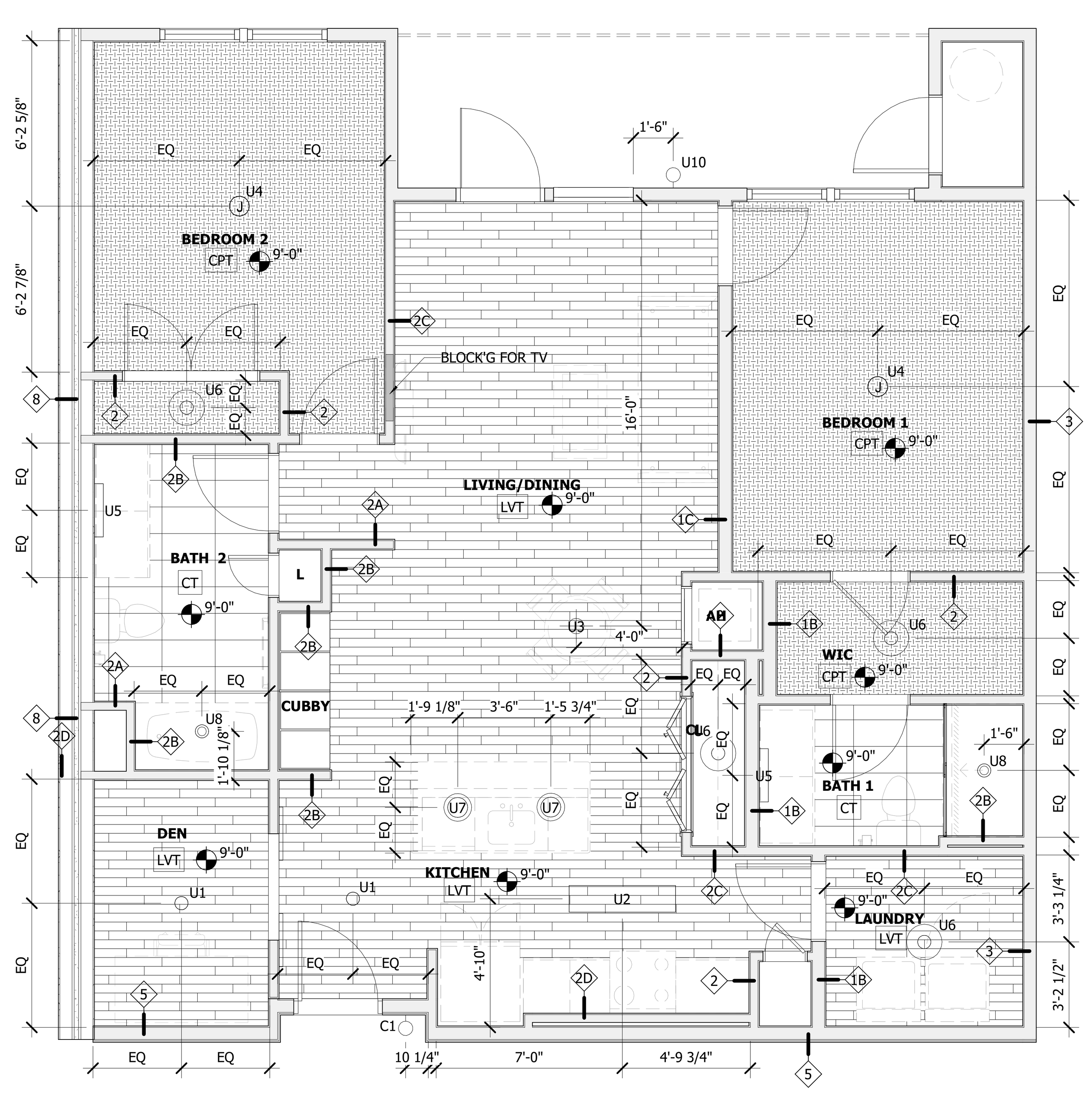


2 UNIT C-FW1 RCP
SCALE : 1/4" = 1'-0"

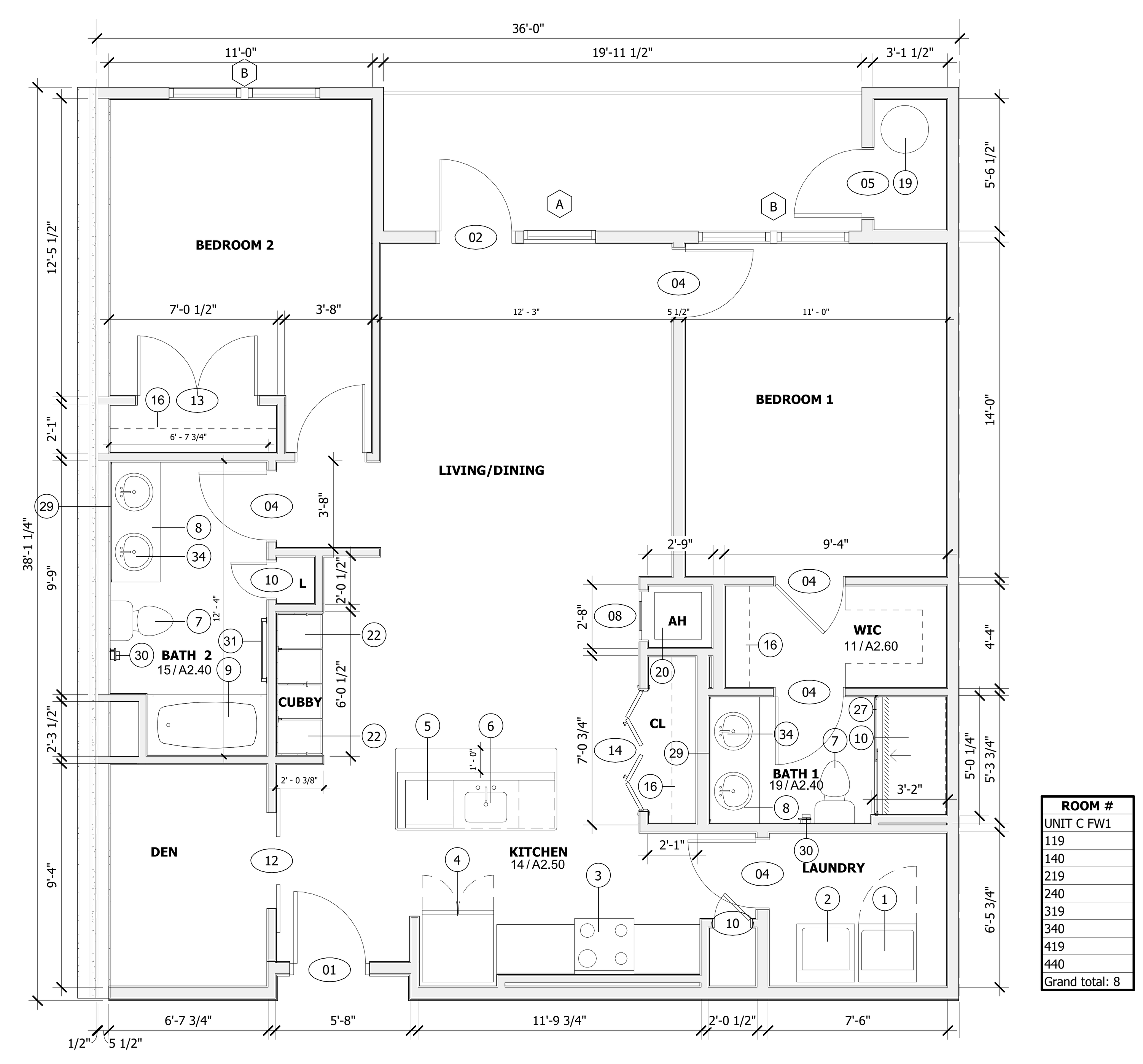


| ROOM # |
|---|
| UNIT C FW1 |
| 119 |
| 140 |
| 219 |
| 240 |
| 319 |
| 340 |
| 419 |
| 440 |
| Grand total: 8 |

1 UNIT - C (FW-1)
SCALE : 1/4" = 1'-0"

ALL REPORTS, PLANS, SPECIFICATIONS AND COMPUTER FILES RELATING TO THIS PROJECT ARE THE PROPERTY OF THE MARTIN ARCHITECTURAL GROUP. THE MARTIN ARCHITECTURAL GROUP RETAINS ALL COMMON LAW, STATUTE AND OTHER RESERVED RIGHTS INCLUDING THE COPYRIGHT THERETO. REPRODUCTION OF THE MATERIAL HEREIN OR SUBSTANTIAL USE WITHOUT WRITTEN PERMISSION OF THE MARTIN ARCHITECTURAL GROUP VIOLATES THE COPYRIGHT LAWS OF THE UNITED STATES AND WILL BE SUBJECT TO LEGAL PROSECUTION.
©2022, The Martin Architectural Group, P.C.




THE MARTIN ARCHITECTURAL GROUP, P.C.
ARCHITECTS AND LAND PLANNERS
A PROFESSIONAL CORPORATION
240 NORTH 22ND STREET, PHILADELPHIA, PA 19103
P (215) 665-1080 F (215) 561-5064

| | |
|---|---|
| P.A.: | DREW ROMANIC |
| P.M.: | JASON DECAMPLI |
| DRAWN BY: | Author |
| PROJECT NO: | 1362-12 |

| NO. | REVISION | DATE |
|---|---|---|
| 1 | PERMIT SET | 12/20/22 |

# UNIT PLANS (UNIT C-FW1)
## Granite Run Apartment 02

MIDDLETOWN TOWNSHIP, PA

| | |
|---|---|
| SCALE: | |
| DATE: | 11/17/22 |

A2.20

©2022, The Martin Architectural Group, P.C.

## DOOR SCHEDULE - DWELLING UNIT

| MARK | DOOR TYPE | WIDTH | HEIGHT | DOOR MATERIAL | FRAME TYPE | FRAME MATERIAL | FIRE RATING | REMARKS |
|---|---|---|---|---|---|---|---|---|
| 01 | UA | 3'-0" | 7'-0" | MTL | F1 | MTL | 20 min. | UNIT ENTRY - SPRING HINGES |
| 02 | UE | 3'-0" | 7'-0" | VY | F1 | VY | | BALCONY DOOR |
| 03 | UB | 3'-0" | 6'-8" | MTE | F1 | WD | | |
| 04 | UB | 2'-10" | 6'-8" | MTE | F1 | WD | | |
| 05 | UA | 2'-10" | 6'-8" | EM | F1 | MTL | | UNIT EXT. MECH DOOR |
| 06 | UB | 2'-6" | 6'-8" | MTE | F1 | WD | | |
| 07 | UB | 2'-0" | 6'-8" | MTE | F1 | WD | | |
| 08 | UC | 2'-0" | 6'-8" | MTE | F1 | WD | | LOUVERED AIR HANDLER |
| 09 | UC | 1'-6" | 6'-8" | MTE | F1 | WD | | LOUVERED AIR HANDLER |
| 10 | UB | 1'-6" | 6'-8" | MTE | F1 | WD | | |
| 11 | UB | 1'-4" | 6'-8" | MTE | F1 | WD | | |
| 12 | UDD | 4'-0" | 6'-8" | MTE | | WD | | SLIDING BARN DOOR |
| 13 | UBB | 5'-0" | 6'-8" | MTE | F2 | WD | | DOUBLE SWING DOOR |
| 14 | UCC | 5'-0" | 6'-8" | MTE | F2 | WD | | LOUVERED BI-FOLD |
| 15 | UCC | 6'-0" | 6'-8" | MTE | F2 | WD | | LOUVERED BI-FOLD |
| 19 | UB | 1'-9" | 6'-8" | MTE | F1 | WD | | |
| E | | 3'-0" | 7'-0" | | | | | |
| EE | | 6'-0" | 7'-0" | | | | | |
| F | | 6'-0" | 7'-0" | | | | | *RATED GLASS |

## ROOM FINISH SCHEDULE

| SPACE | FLOOR | WALL | CEILING | HEIGHT | REMARKS |
|---|---|---|---|---|---|
| KITCHEN | 3 | A | 1 | 9'-0" | |
| LIVING RM. | 3 | A | 1 | 9'-0" | |
| BEDROOMS | 1 | A | 1 | 9'-0" | |
| DEN | 3 | A | 1 | 9'-0" | |
| BATHS | 4 | B/C | 2 | 9'-0" | |
| CLOSETS | | A | 1 | 9'-0" | FLOORING: MATCH ADJ. |
| LAUNDRY | 3 | A | 2 | 9'-0" | FLOORING: MATCH ADJ. |
| UNIT-HVAC | | A | 1 | 9'-0" | FL.: GYPCRETE PAINT-LIGHT GRAY |

### MATERIAL CODE

| FLR. / BASE | | WALL | | CEILING | |
|---|---|---|---|---|---|
| 1 | CPT / WD | A | G.W.B. | 1 | G.W.B. |
| 2 | | B | MR.G.W.B. | 2 | MR.G.W.B. |
| 3 | LVT / WD | C | CT-2 | 3 | |
| 4 | CT / CT | D | | 4 | |
| 5 | | E | | 5 | |
| 6 | | F | | 6 | |
| 7 | | G | | 7 | |
| 8 | | H | | 8 | |

MATERIAL GLOSSARY

| | |
|---|---|
| CPT | CARPET - SHAW GULF WINDS - COLOR: 532 MINERAL |
| CT-1 | CERAMIC TILE - 12X24 FLORIM MATERIA - COLOR: HONED 02 |
| CT-2 | CERAMIC TILE - 12X24 FLORIM MATERIA - COLOR: STONE CALACATTA |
| G.W.B. | GYPSUM WALL BOARD |
| MR.G.W.B. | MOISTURE RESISTANT G.W.B. |
| LVT | VINYL WOOD PLANK - SHAW TERRAIN 12 MIL - COLOR: 766 ECHO |
| WD. | WOOD |

## UNIT DOOR TYPES

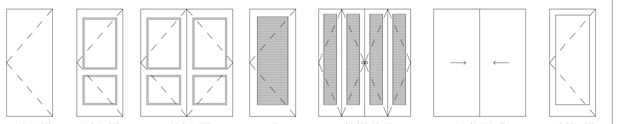


## FRAME TYPES

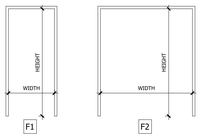


**DOOR/FRAME MATERIAL KEY:**

| | |
|---|---|
| AL | ALUMINUM |
| EM | EXTERIOR METAL |
| GL | GLASS |
| HC | HOLLOW CORE |
| HM | HOLLOW METAL |
| MTL | METAL |
| SC | SOLID CORE |
| SR | STILE & RAIL |
| VY | VINYL |
| WD | WOOD |
| MTE | MASONITE |

## WINDOW SCHEDULE

| MARK | WIDTH | HEIGHT | WINDOW TYPE | CONSTRUCTION TYPE | COMMENTS |
|---|---|---|---|---|---|
| A | 3'-0" | 6'-0" | SINGLE HUNG | VINYL | All windows to be provided with opening limiters. See specifications. |
| B | 6'-3 1/2" | 6'-0" | SINGLE HUNG | VINYL | All windows to be provided with opening limiters. See specifications. |

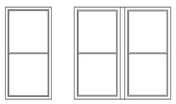


NOTE: (2) 2X6 FRT STUDS PROVIDED BETWEEN GROUP WINDOWS. (TYPICAL)
PROVIDE 4" LIMITATION FOR WINDOW LIMITERS ON ALL WINDOWS

## LIGHT FIXTURE LEGEND

| | |
|---|---|
| U1 | LITHONIA FMSATL-16-20840-BN; SEMI FLUSH MOUNT |
| U2 | LITHONIA FMFL-30840-SATL-BN; LINEAR FLUSH MOUNT |
| U3 | LITHONIA DFMADRL-14-F01; FMPANL-14-20840M6; LED SURFACE MOUNT DRUM |
| U4 | SATCO COVER PLATE |
| U5 | PROGRESS P300187-009-30; LED BATH VANITY |
| U6 | LITHONIA FMMUSL-9-14840-WH; LED CLOSET MUSHROOM |
| U7 | LITHONIA MDPC-BNP-M6; DGDT 1003 M6 |
| U8 | COOPER SMD6R-12-930-WH; 1200 LUMEN SLIM SURFACE (120 VOLT ONLY) |
| U9 | NUVO 62-1161; 7" LED FLUSH MOUNT DISCK |
| U10 | LITHONIA OLWPLED-P1-40K-120-PE-BZ; LED MINI WALL PACK |

## UNIT PLAN AND INTERIOR ELEVATION KEYNOTES

| Number | Description |
|---|---|
| 1 | WASHER |
| 2 | DRYER |
| 3 | RANGE / OVEN |
| 4 | REFRIGERATOR |
| 5 | DISHWASHER |
| 6 | KITCHEN SINK / FAUCET |
| 7 | TOILET |
| 8 | VANITY - SEE ELEVATION FOR SIZE |
| 9 | 30"X60" TUB |
| 10 | 36"X60" SHOWER BASE |
| 11 | 32"X60" SHOWER BASE |
| 12 | ACCESSIBLE THRESHOLD - MARBLE |
| 13 | ACCESSIBLE THRESHOLD - ALUMINIUM |
| 14 | SOFFIT OVER REFRIGERATOR AND BEHIND CABINET |
| 15 | LINEN SHELVES (5) PER SPECIFICATION |
| 16 | WIRE SHEVLING |
| 17 | KNEE WALL BELOW COUNTERTOP |
| 18 | BALCONY RAILING @ 42" HIGH |
| 19 | WALL MOUNTED HOT WATER HEATER |
| 20 | HVAC UNIT MOUNTED ON WALL |
| 21 | PRE ROCK BEHIND BATHING FIXTURES |
| 22 | CUBBIE CABINETS |
| 23 | MICROWAVE WITH RECIRCULATION HOOD |
| 24 | WALL TILE BETWEEN CONTERTOP AND WALL CABINET. SEE 1D DRAWING |
| 25 | BLOCKING FOR GRAB BAR. SEE FIG. 4- SHEET A0.06 |
| 26 | 24" HORIZONTAL GRAB BAR @ TUB BACK WALL. SEE FIG. 4 - SHEET A0.06 |
| 27 | SHOWER ROD |
| 28 | NOT USED |
| 29 | PAINTED FRAME MIRROR |
| 30 | TOILET TISSUE HOLDER @ 26" A.F.F. |
| 31 | 30" TOWEL BAR |
| 32 | ROBE HOOK |
| 33 | SHOWER HEAD |
| 34 | VANITY SINK BOWL |

**NOTES:**

1. SEE SPECIFICATIONS FOR ADDITIONAL INFORMATION.
2. ALL DOOR HARDWARE TO BE COMPLIANT WITH THE FEDERAL FAIR HOUSING ACT (FHA).
3. DOORS SHALL BE OPENABLE WITH NO MORE THAN ONE RELEASING OPERATION.
4. PROVIDE ACCESSIBLE THRESHOLDS AT ALL DOORS.
5. ALL UNITS ARE ADAPTABLE PER FHA. SEE SHEET A0.06 FOR ADDITIONAL INFORMATION.
6. ALL DIMENSIONS ARE TO ROUGH FRAMING U.N.O.
7. ALL WALLS ARE 2X4 STUDS UNLESS NOTED OTHERWISE.
8. ALL TENANT SEPERATIONS AND CORRIDOR WALLS ARE 2X6 UNLESS NOTED OTHERWISE.
9. PATIO AT FIRST FLOOR 4" BELOW UNIT FINISH FLOOR.
10. BALCONIES ARE FLUSH WITH GYPCRETE TOPPING. SEE DETAIL.
11. ALL TOILETS SET ON NEOPRENE GASKET WITH INSULATED PIPE TRAP.
12. ALL KITCHEN APPLIANCES TO HAVE STAINLESS STEEL FRONTS.
13. WHERE DRAWINGS ARE IN CONFLICT WITH OTHER DRAWINGS, CONTRACTOR SHALL NOTIFY THE ARCHITECT.
14. PROVIDE BLOCKING FOR GRAB BARS IN ALL BATHROOMS
15. DIMENSION TO STUD UNLESS OTHERWISE NOTED
16. DIMESNION TO FINISH @ CABINETS
17. PROVIDE BLOCKING FOR TV WALL MOUNT, CENTER AT 60" A.F.F.
18. ALL BATHROOM VANITES ARE 21" IN DEPTH

| ROOM FINISH MATERIAL CODE | |
|---|---|
| CPT | CARPET |
| CT | CERAMIC TILE |
| CONC | CONCRETE |
| GWB | GYPSUM WALL BOARD |
| MR GWB | MOISTURE RESISTANT GWB |
| V | SHEET VINYL |
| VWP | VINYL WOOD PLANK |
| VCT | VINYL COMPOSITE TILE |
| WD | WOOD |

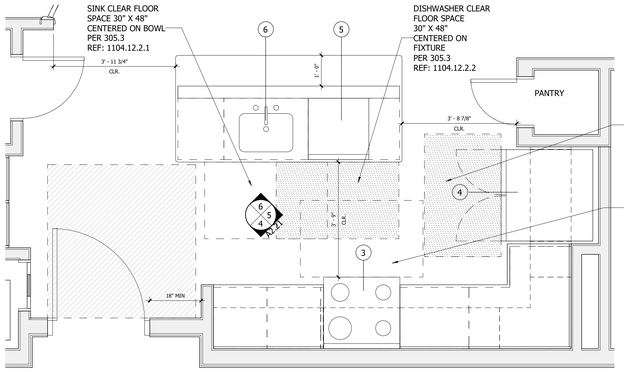


### 3 UNIT C2 - KITCHEN - PLAN
SCALE : 1/2" = 1'-0"

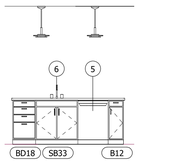


### 6 UNIT C2 - KITCHEN - ELEV 3
SCALE : 1/4" = 1'-0"

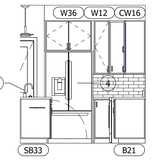


### 5 UNIT C2 - KITCHEN - ELEV 2
SCALE : 1/4" = 1'-0"

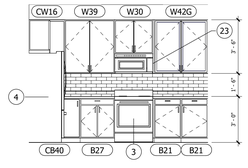


### 4 UNIT C2 - KITCHEN - ELEV 1
SCALE : 1/4" = 1'-0"

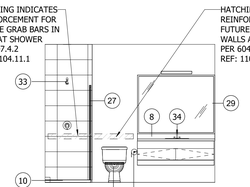


### 7 UNIT C2 - BATHROOM - ELEV 1
SCALE : 1/4" = 1'-0"

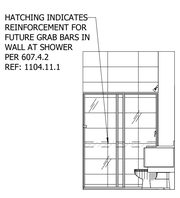


### 8 UNIT C2 - BATHROOM - ELEV 2
SCALE : 1/4" = 1'-0"

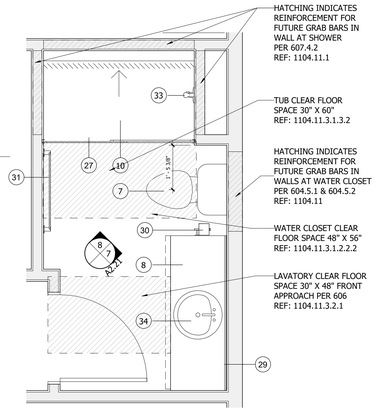


### 2 UNIT C2 - BATHROOM - PLAN
SCALE : 1/2" = 1'-0"

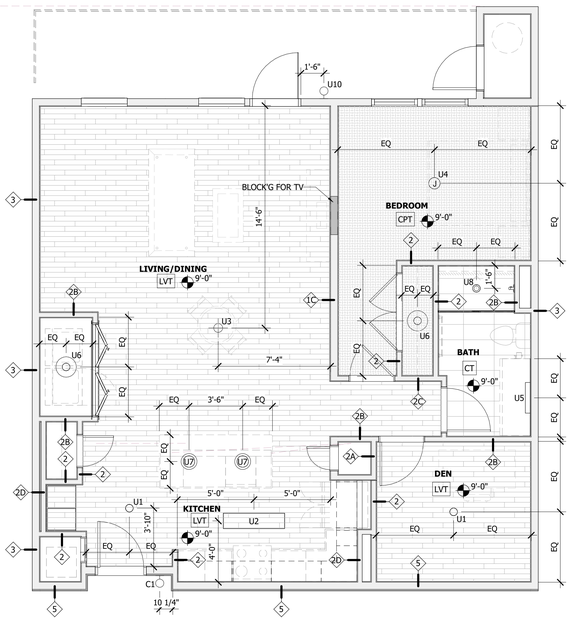


### 1A UNIT C2 RCP
SCALE : 1/4" = 1'-0"

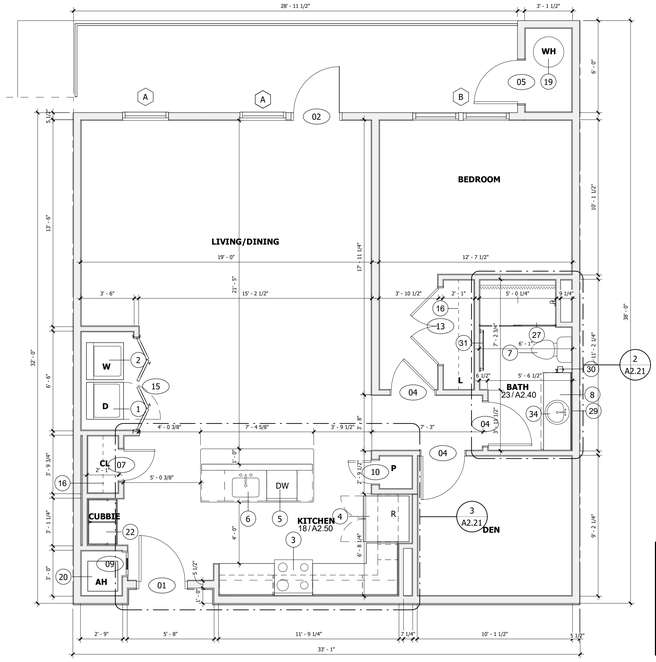


### 1 UNIT - C2
SCALE : 1/4" = 1'-0"


ALL REPORTS, PLANS, SPECIFICATIONS AND COMPUTER FILES RELATING TO THIS PROJECT ARE THE PROPERTY OF THE MARTIN ARCHITECTURAL GROUP. THE MARTIN ARCHITECTURAL GROUP RETAINS ALL COMMON LAW, STATUTE AND OTHER RESERVED RIGHTS INCLUDING THE COPY-RIGHT THERETO. REPRODUCTION OF THE MATERIAL HEREIN OR SUBSTANTIAL USE WITHOUT WRITTEN PERMISSION OF THE MARTIN ARCHITECTURAL GROUP VIOLATES THE COPYRIGHT LAWS OF THE UNITED STATES AND WILL BE SUBJECT TO LEGAL PROSECUTION.
©2022, The Martin Architectural Group, P.C.


NIC

REGISTERED ARCHITECT COMMONWEALTH OF PENNSYLVANIA DREW ROMANIC No. RA-020015

Professi
I hereby prepare to the laws of
Professi License Expiatic


THE MARTIN ARCHITECTURAL GROUP, P.C.
ARCHITECTS AND LAND PLANNERS
A PROFESSIONAL CORPORATION
240 NORTH 22ND STREET, PHILADELPHIA, PA, 19103
P (215) 665-1080 F (215) 561-5064


| | |
|---|---|
| P.A.: | DREW ROMANIC |
| P.M.: | JASON DECAMPLI |
| DRAWN BY: | Author |
| PROJECT NO: | 1362-12 |

| NO. | REVISION / PERMIT SET | DATE |
|---|---|---|
| 1 | | 12/20/22 |

# UNIT PLAN (UNIT C2)
## Granite Run Apartment 02
MIDDLETOWN TOWNSHIP, PA

SCALE:
DATE: 09/09/22

# A2.21


©2022, The Martin Architectural Group, P.C.


Printed: 1/13/2023 4:30:57 PM

| DOOR SCHEDULE - DWELLING UNIT | | | | | | | | |
|---|---|---|---|---|---|---|---|---|
| MARK | DOOR TYPE | WIDTH | HEIGHT | DOOR MATERIAL | FRAME TYPE | FRAME MATERIAL | FIRE RATING | REMARKS |
| 01 | UA | 3'-0" | 7'-0" | MTL | F1 | MTL | 20 min. | UNIT ENTRY - SPRING HINGES |
| 02 | UE | 3'-0" | 7'-0" | VY | F1 | VY | | BALCONY DOOR |
| 03 | UB | 3'-0" | 6'-8" | MTE | F1 | WD | | |
| 04 | UB | 2'-10" | 6'-8" | MTE | F1 | WD | | |
| 05 | UA | 2'-10" | 6'-8" | EM | F1 | MTL | | UNIT EXT. MECH DOOR |
| 06 | UB | 2'-6" | 6'-8" | MTE | F1 | WD | | |
| 07 | UB | 2'-0" | 6'-8" | MTE | F1 | WD | | |
| 08 | UC | 2'-0" | 6'-8" | MTE | F1 | WD | | LOUVERED AIR HANDLER |
| 09 | UC | 1'-6" | 6'-8" | MTE | F1 | WD | | LOUVERED AIR HANDLER |
| 10 | UB | 1'-6" | 6'-8" | MTE | F1 | WD | | |
| 11 | UB | 1'-4" | 6'-8" | MTE | F1 | WD | | |
| 12 | UDD | 4'-0" | 6'-8" | MTE | | WD | | SLIDING BARN DOOR |
| 13 | UBB | 5'-0" | 6'-8" | MTE | F2 | WD | | DOUBLE SWING DOOR |
| 14 | UCC | 5'-0" | 6'-8" | MTE | F2 | WD | | LOUVERED BI-FOLD |
| 15 | UCC | 6'-0" | 6'-8" | MTE | F2 | WD | | LOUVERED BI-FOLD |
| 19 | UB | 1'-9" | 6'-8" | MTE | F1 | WD | | |
| E | | 3'-0" | 7'-0" | | | | | |
| EE | | 6'-0" | 7'-0" | | | | | |
| F | | 6'-0" | 7'-0" | | | | | *RATED GLASS |

## ROOM FINISH SCHEDULE

| SPACE | FLOOR | WALL | CEILING | HEIGHT | REMARKS |
|---|---|---|---|---|---|
| KITCHEN | 3 | A | 1 | 9'-0" | |
| LIVING RM. | 3 | A | 1 | 9'-0" | |
| BEDROOMS | 1 | A | 1 | 9'-0" | |
| DEN | 3 | A | 1 | 9'-0" | |
| BATHS | 4 | B/C | 2 | 9'-0" | |
| CLOSETS | | A | 1 | 9'-0" | FLOORING: MATCH ADJ. |
| LAUNDRY | 3 | A | 2 | 9'-0" | FLOORING: MATCH ADJ. |
| UNIT-HVAC | | A | 1 | 9'-0" | FL.: GYPCRETE PAINT-LIGHT GRAY |

### MATERIAL CODE

| FLR. / BASE | | WALL | | CEILING | |
|---|---|---|---|---|---|
| 1 | CPT / WD | A | G.W.B. | 1 | G.W.B. |
| 2 | | B | MR.G.W.B. | 2 | MR.G.W.B. |
| 3 | LVT / WD | C | CT-2 | 3 | |
| 4 | CT / CT | D | | 4 | |
| 5 | | E | | 5 | |
| 6 | | F | | 6 | |
| 7 | | G | | 7 | |
| 8 | | H | | 8 | |

MATERIAL GLOSSARY

| | |
|---|---|
| CPT | CARPET - SHAW GULF WINDS - COLOR: 532 MINERAL |
| CT-1 | CERAMIC TILE - 12X24 FLORIM MATERIA - COLOR: HONED 02 |
| CT-2 | CERAMIC TILE - 12X24 FLORIM MATERIA - COLOR: STONE CALACATTA |
| G.W.B. | GYPSUM WALL BOARD |
| MR.G.W.B. | MOISTURE RESISTANT G.W.B. |
| LVT | VINYL WOOD PLANK - SHAW TERRAIN 12 MIL - COLOR: 766 ECHO |
| WD. | WOOD |

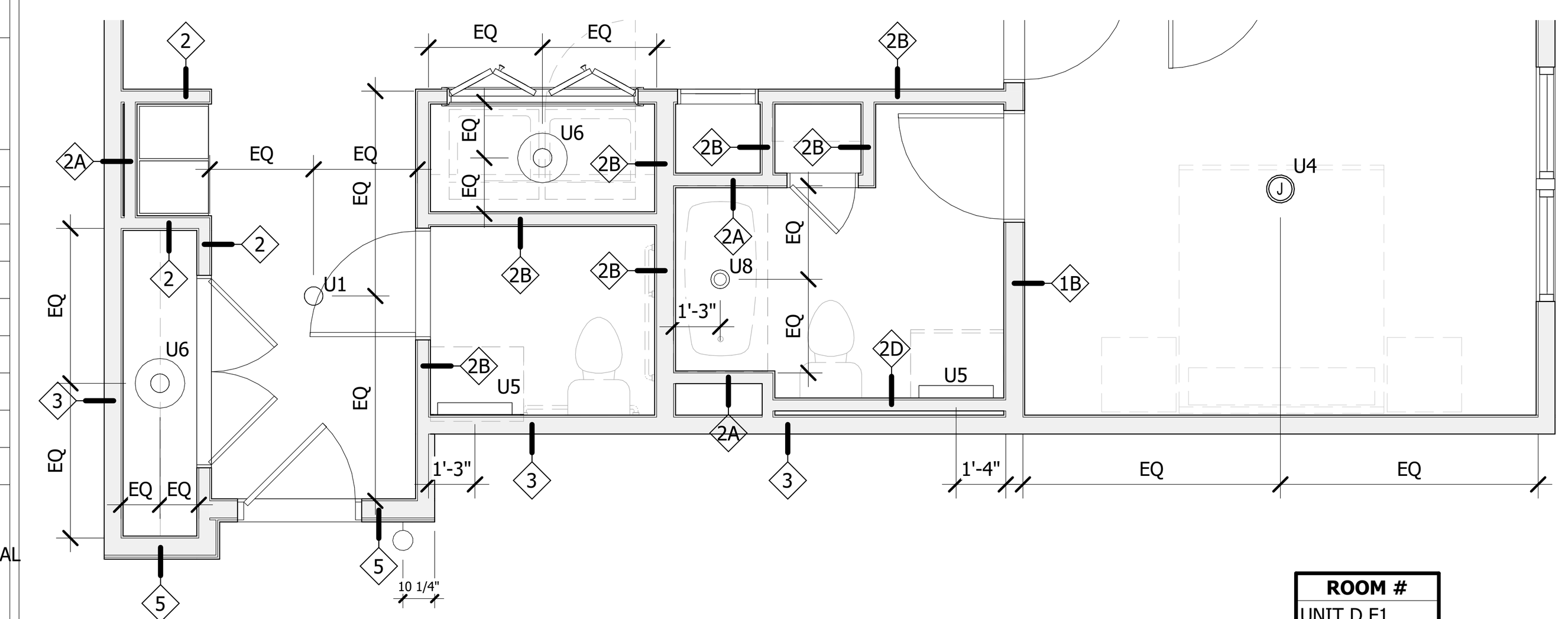

| ROOM # |
|---|
| UNIT D F1 |
| 126 |
| 226 |
| 326 |
| 426 |
| Grand total: 4 |

4 UNIT D-F1 RCP
SCALE : 1/4" = 1'-0"

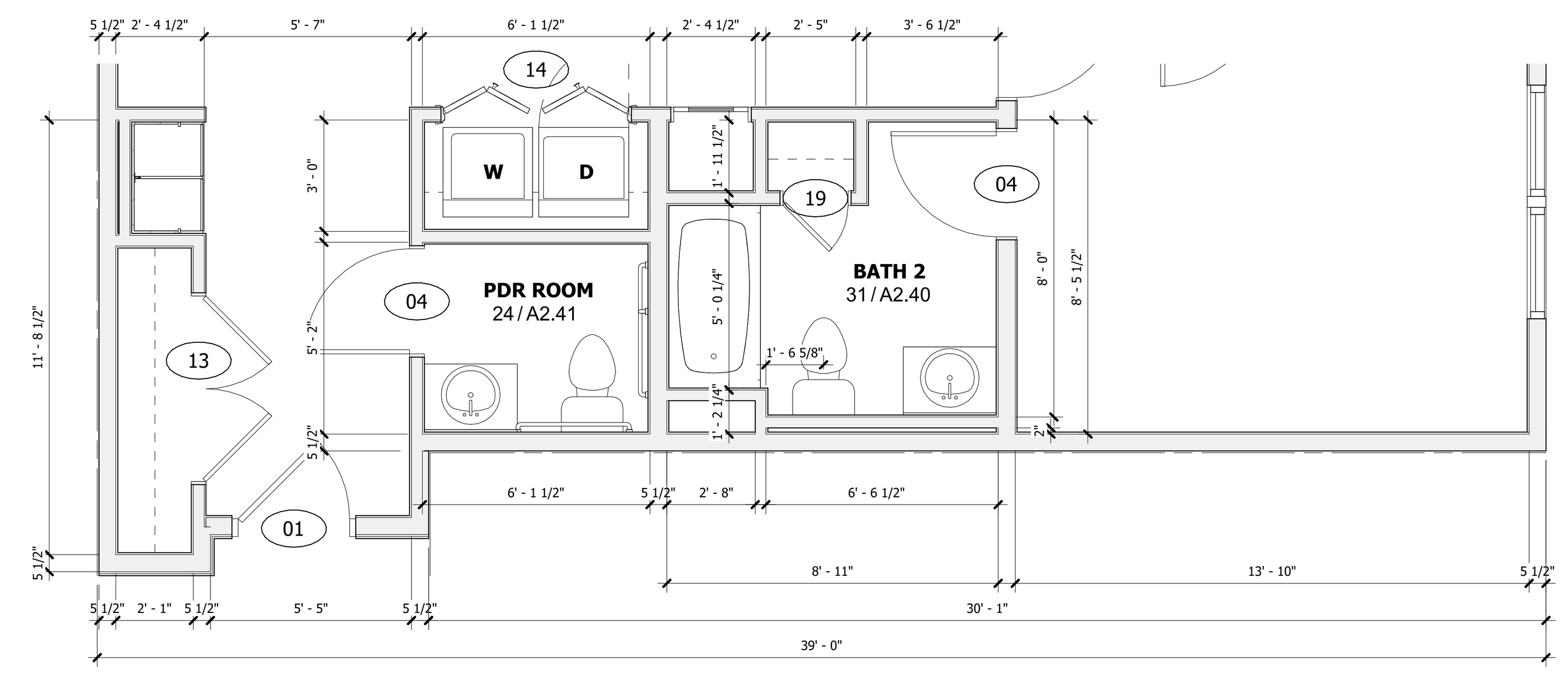

2 UNIT - D - F1 (ALT. FOYER)
SCALE : 1/4" = 1'-0"

## UNIT DOOR TYPES

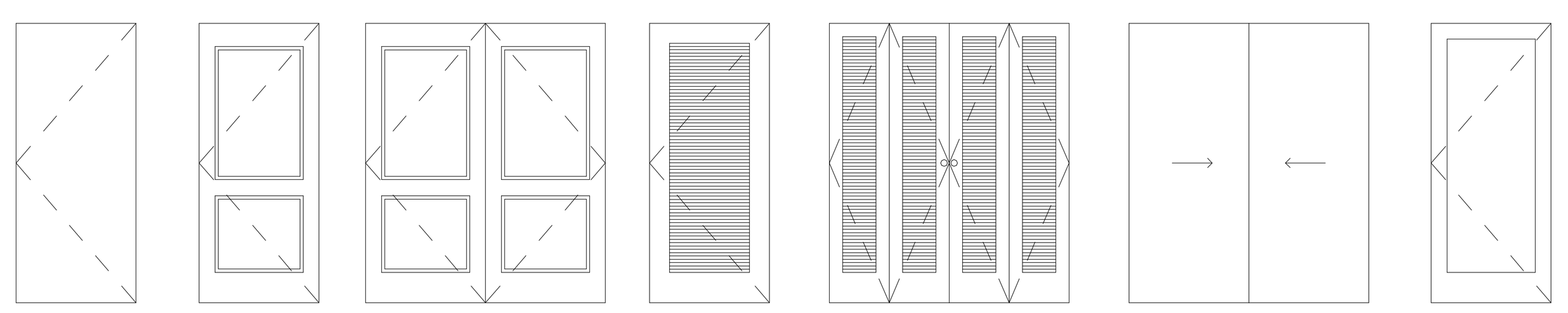


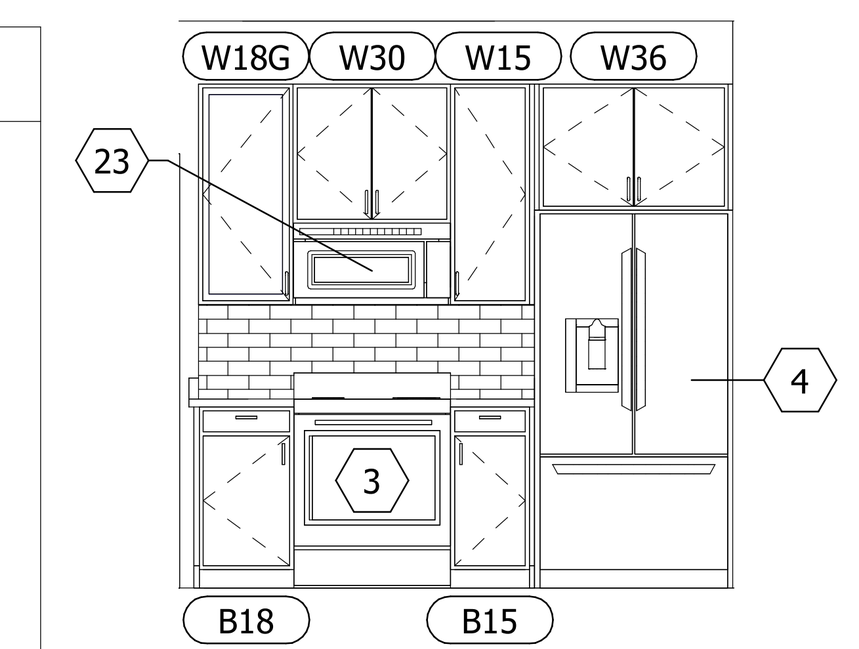

9 UNIT D, D-F1 - KITCHEN 1
SCALE : 1/4" = 1'-0"

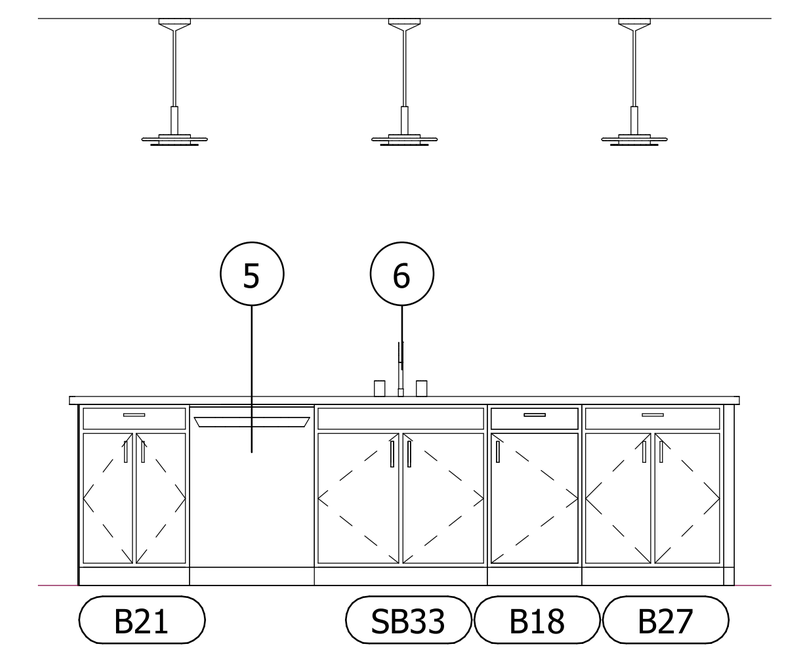

10 UNIT D, D-F1 - KITCHEN 2
SCALE : 1/4" = 1'-0"

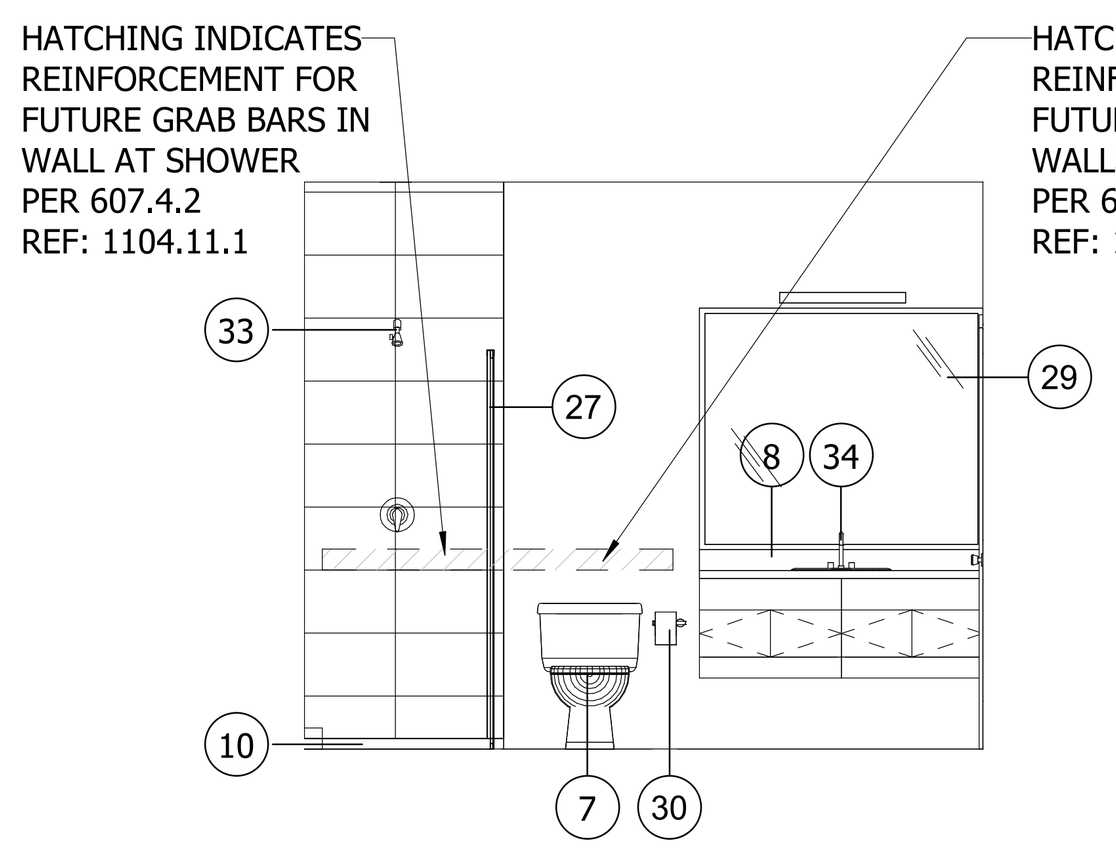


11 UNIT D, D-F1 - BATH 2 - 1
SCALE : 1/4" = 1'-0"

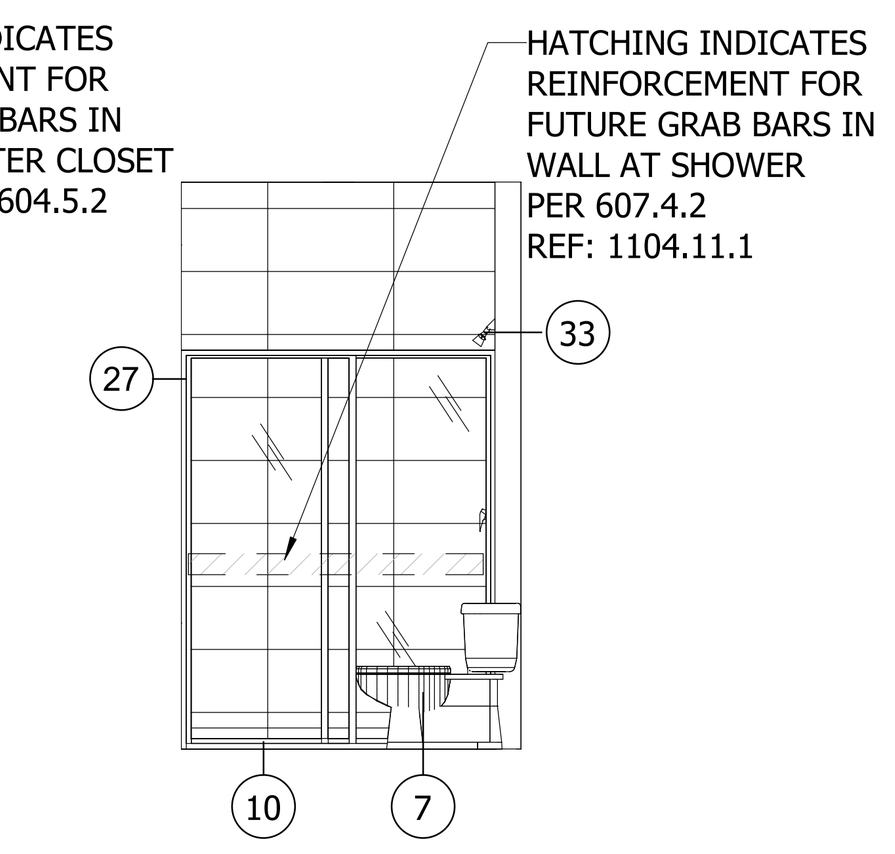


12 UNIT D, D-F1 - BATH 2 - 2
SCALE : 1/4" = 1'-0"

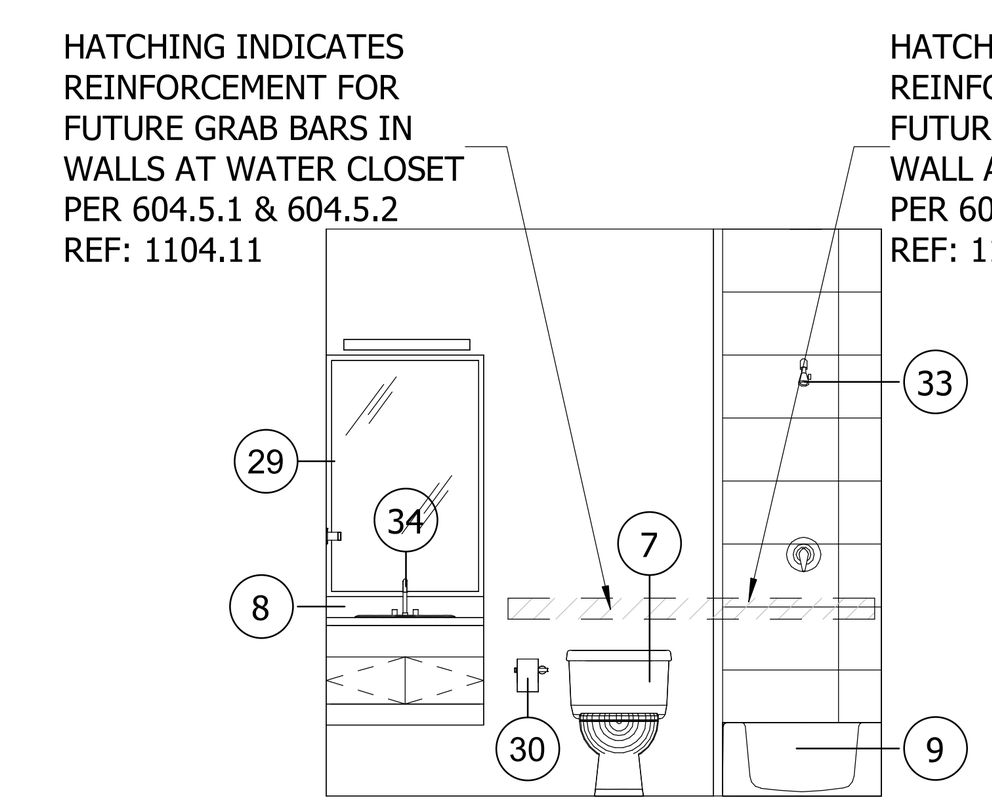


13 UNIT D, D-F1 - BATH 1 - 1
SCALE : 1/4" = 1'-0"

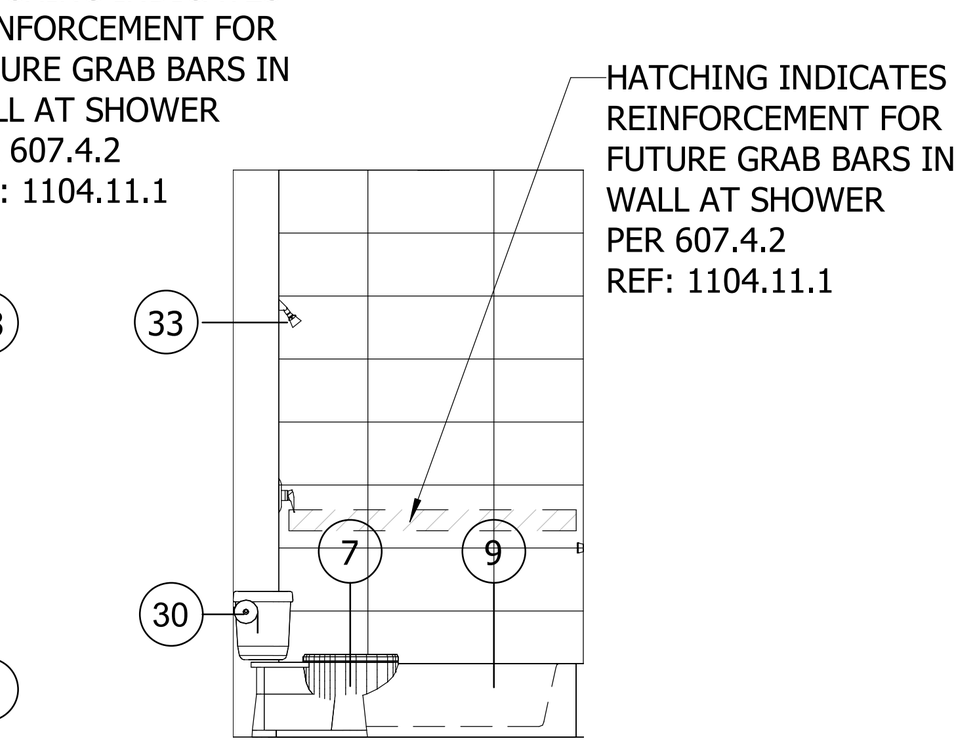


14 UNIT D, D-F1 - BATH 1 - 2
SCALE : 1/4" = 1'-0"

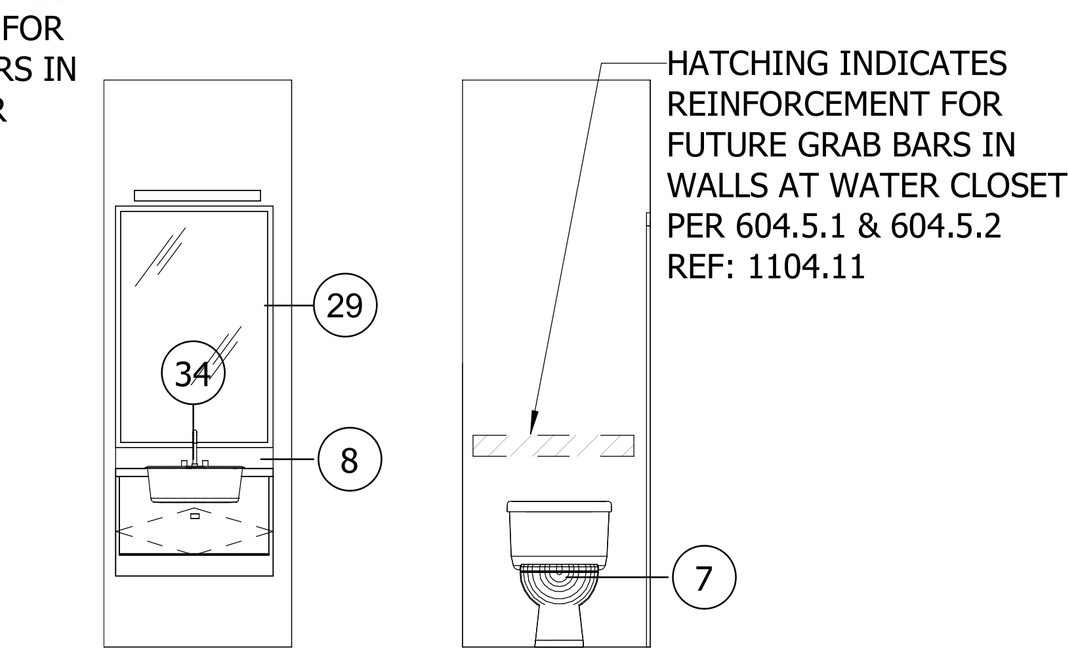


16 UNIT D, D-F1 - PR - 1&2
SCALE : 1/4" = 1'-0"

## FRAME TYPES

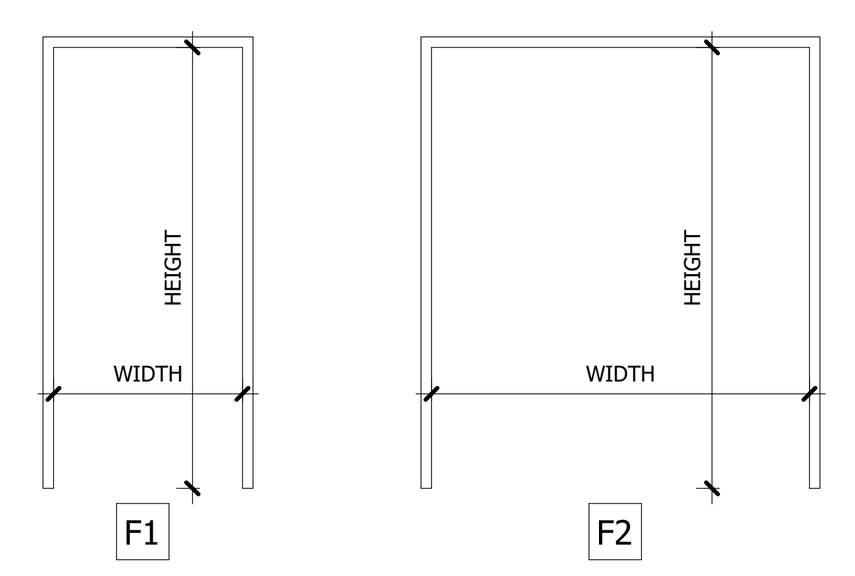


**DOOR/FRAME MATERIAL KEY:**

| | |
|---|---|
| AL | ALUMINUM |
| EM | EXTERIOR METAL |
| GL | GLASS |
| HC | HOLLOW CORE |
| HM | HOLLOW METAL |
| MTL | METAL |
| SC | SOLID CORE |
| SR | STILE & RAIL |
| VY | VINYL |
| WD | WOOD |
| MTE | MASONITE |

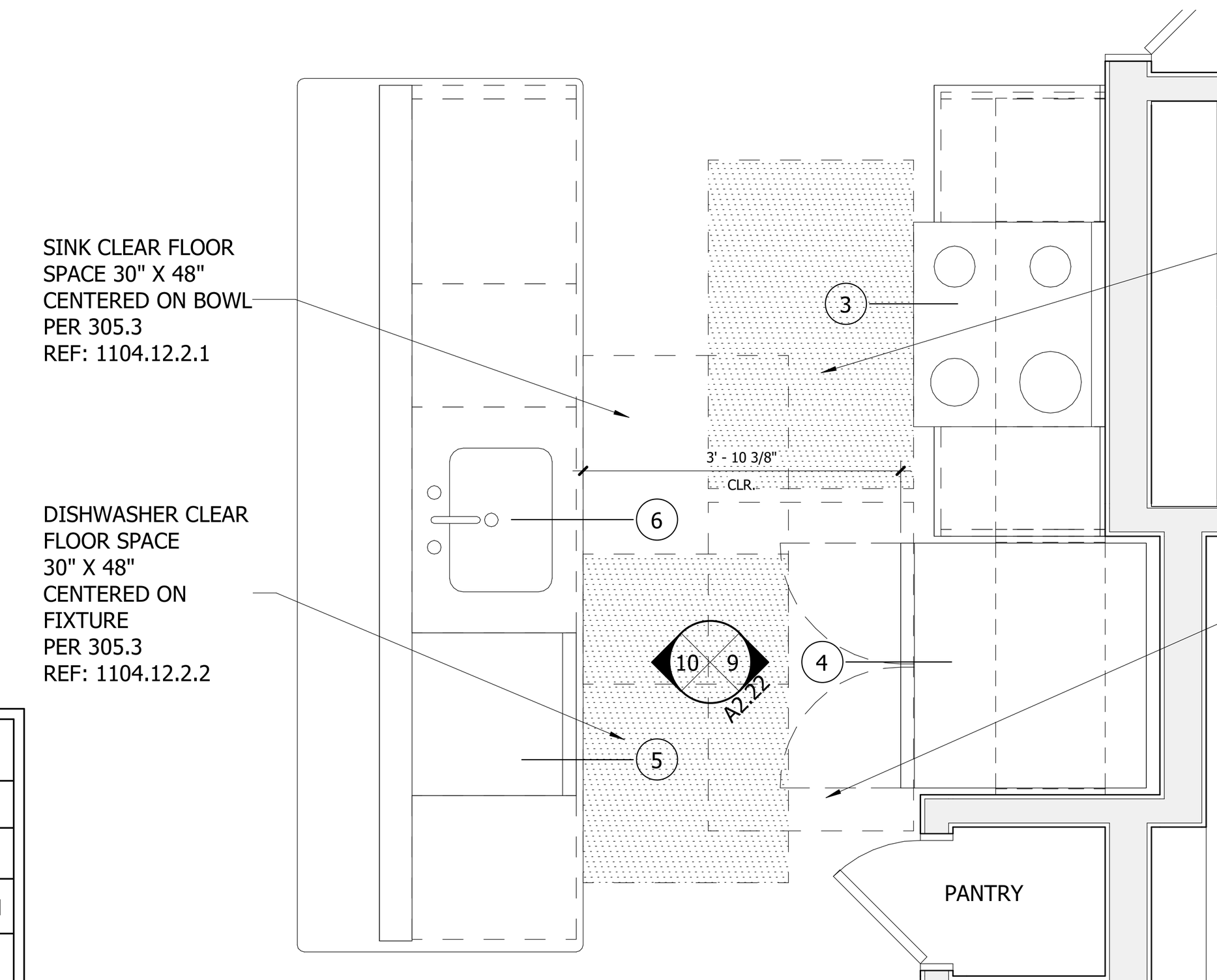


8 UNIT D, D-F1 - KITCHEN - PLAN
SCALE : 1/2" = 1'-0"

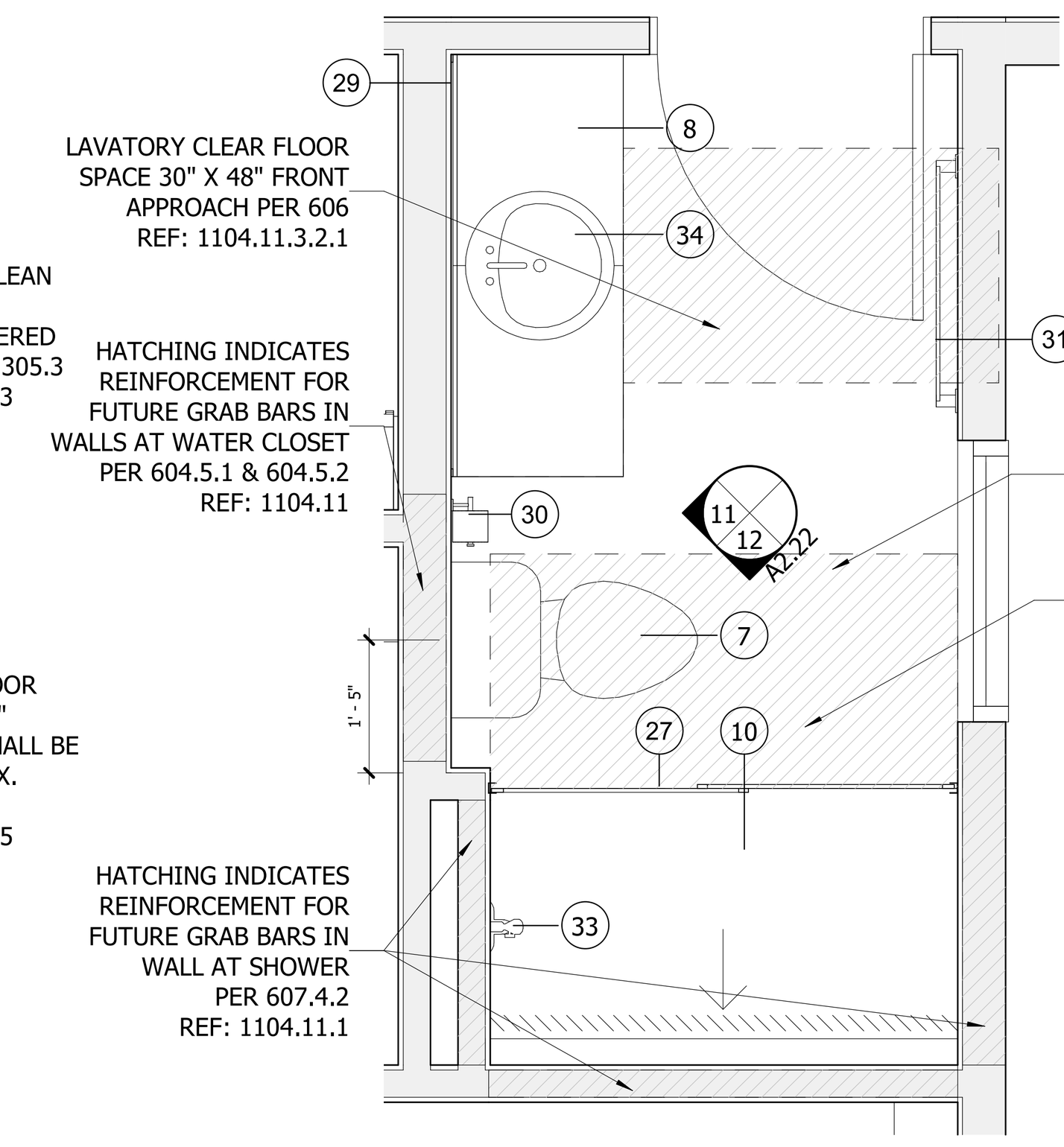


6 UNIT D, D-F1 - BATHROOM 2 - PLAN
SCALE : 1/2" = 1'-0"

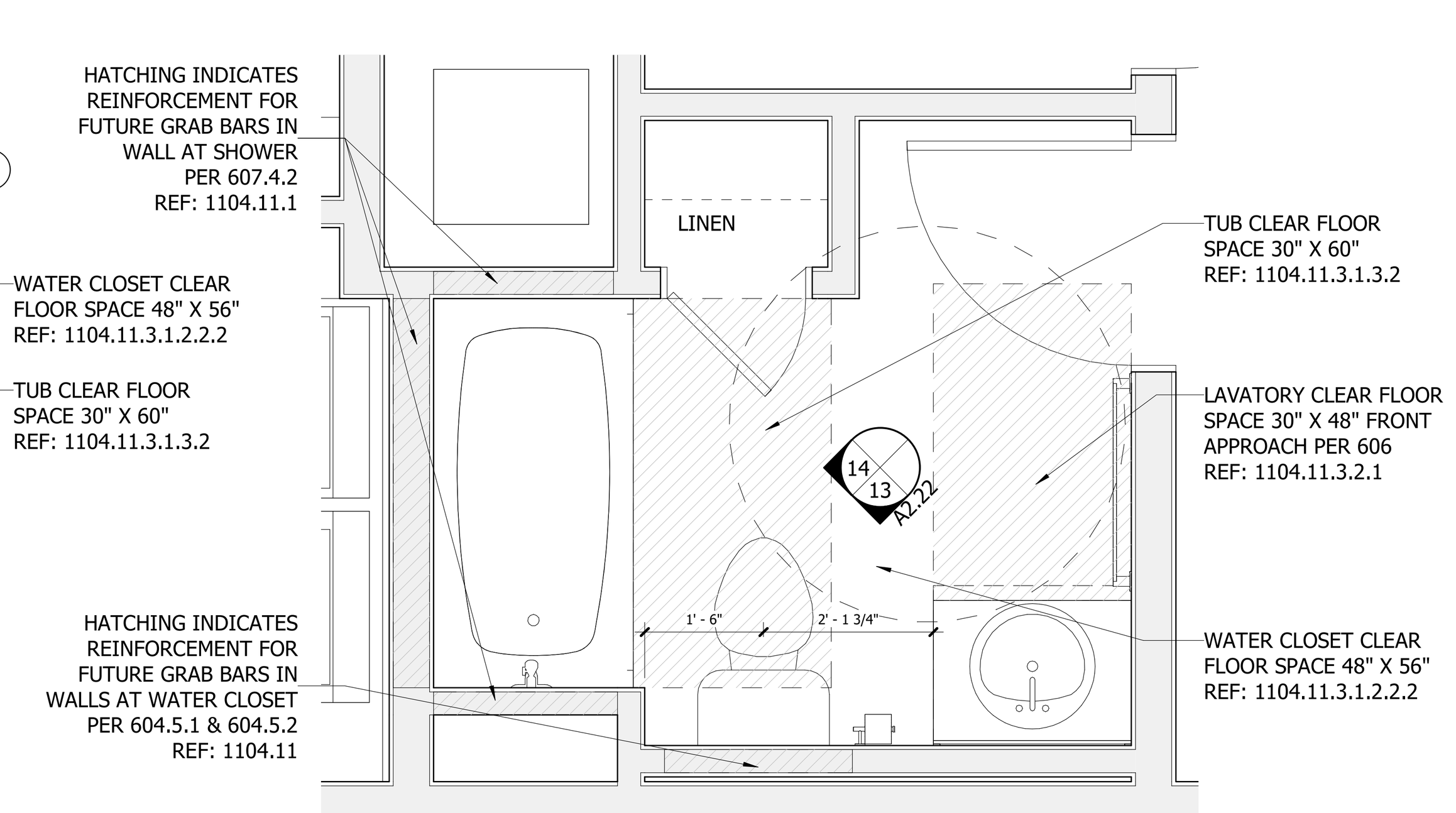


5 UNIT D, D-F1 - BATHROOM 1 - PLAN
SCALE : 1/2" = 1'-0"

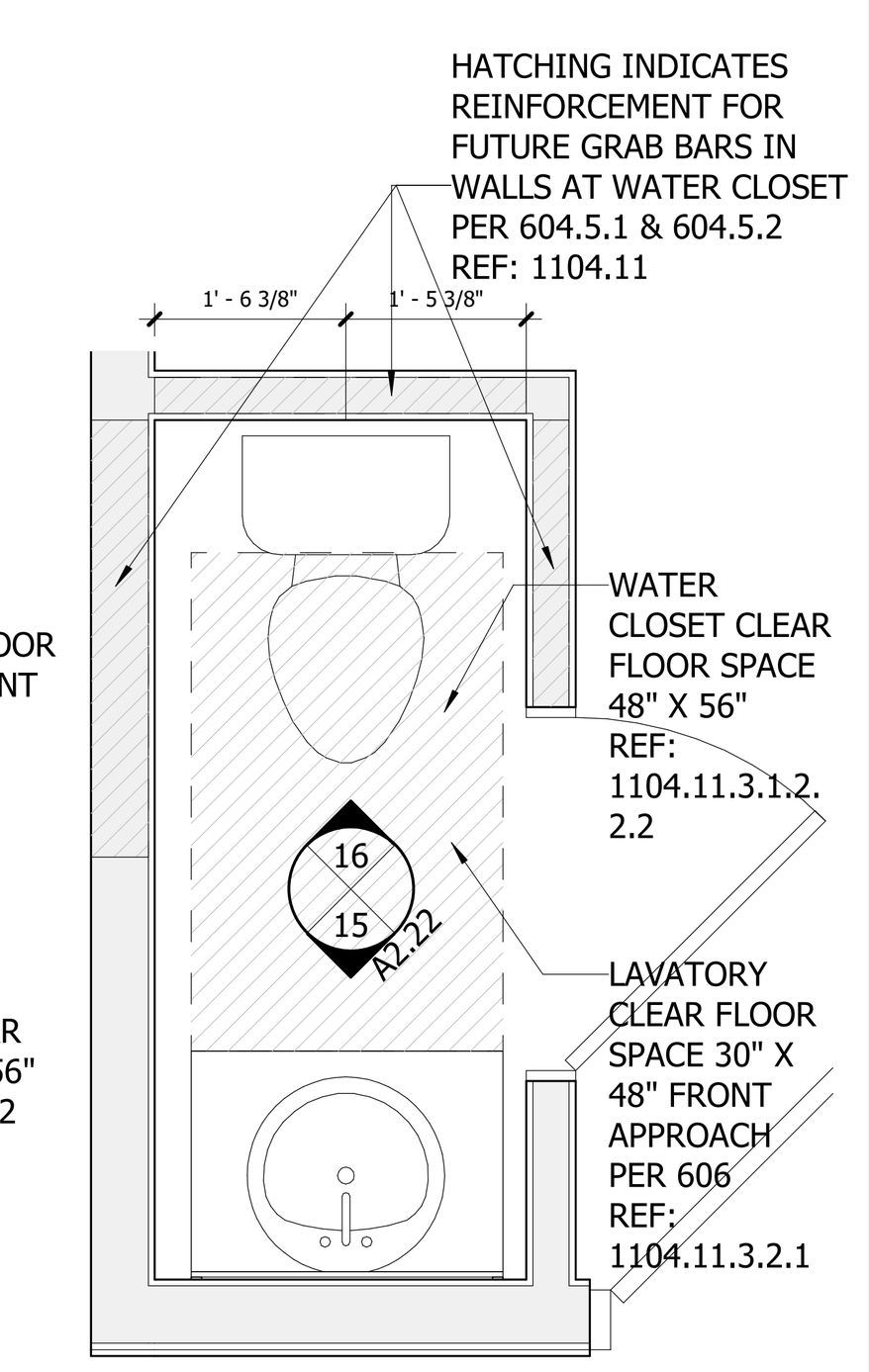


7 UNIT D, D-F1 - PDR RM - PLAN
SCALE : 1/2" = 1'-0"

| WINDOW SCHEDULE | | | | | |
|---|---|---|---|---|---|
| MARK | WIDTH | HEIGHT | WINDOW TYPE | CONSTRUCTION TYPE | COMMENTS |
| A | 3'-0" | 6'-0" | SINGLE HUNG | VINYL | All windows to be provided with opening limiters. See specifications. |
| B | 6'-3 1/2" | 6'-0" | SINGLE HUNG | VINYL | All windows to be provided with opening limiters. See specifications. |

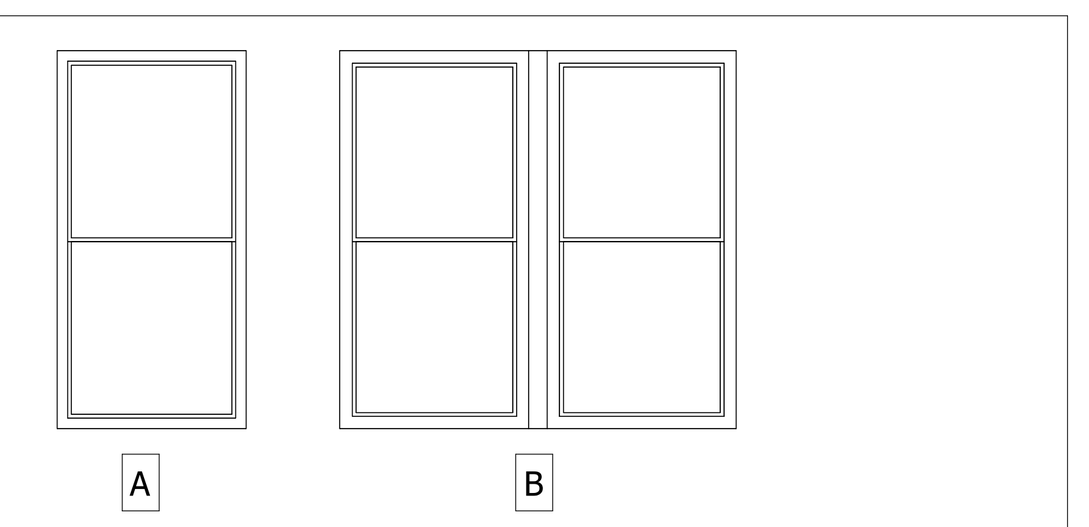


NOTE: (2) 2X6 FRT STUDS PROVIDED BETWEEN GROUP WINDOWS. (TYPICAL)
PROVIDE 4" LIMITATION FOR WINDOW LIMITERS ON ALL WINDOWS

## LIGHT FIXTURE LEGEND

| | |
|---|---|
| U1 | LITHONIA FMSATL-16-20840-BN; SEMI FLUSH MOUNT |
| U2 | LITHONIA FMFL-30840-SATL-BN; LINEAR FLUSH MOUNT |
| U3 | LITHONIA DFMADRL-14-F01; FMPANL-14-20840M6; LED SURFACE MOUNT DRUM |
| U4 | SATCO COVER PLATE |
| U5 | PROGRESS P300187-009-30; LED BATH VANITY |
| U6 | LITHONIA FMMUSL-9-14840-WH; LED CLOSET MUSHROOM |
| U7 | LITHONIA MDPC-BNP-M6; DGDT 1003 M6 |
| U8 | COOPER SMD6R-12-930-WH; 1200 LUMEN SLIM SURFACE (120 VOLT ONLY) |
| U9 | NUVO 62-1161; 7" LED FLUSH MOUNT DISCK |
| U10 | LITHONIA OLWPLED-P1-40K-120-PE-BZ; LED MINI WALL PACK |

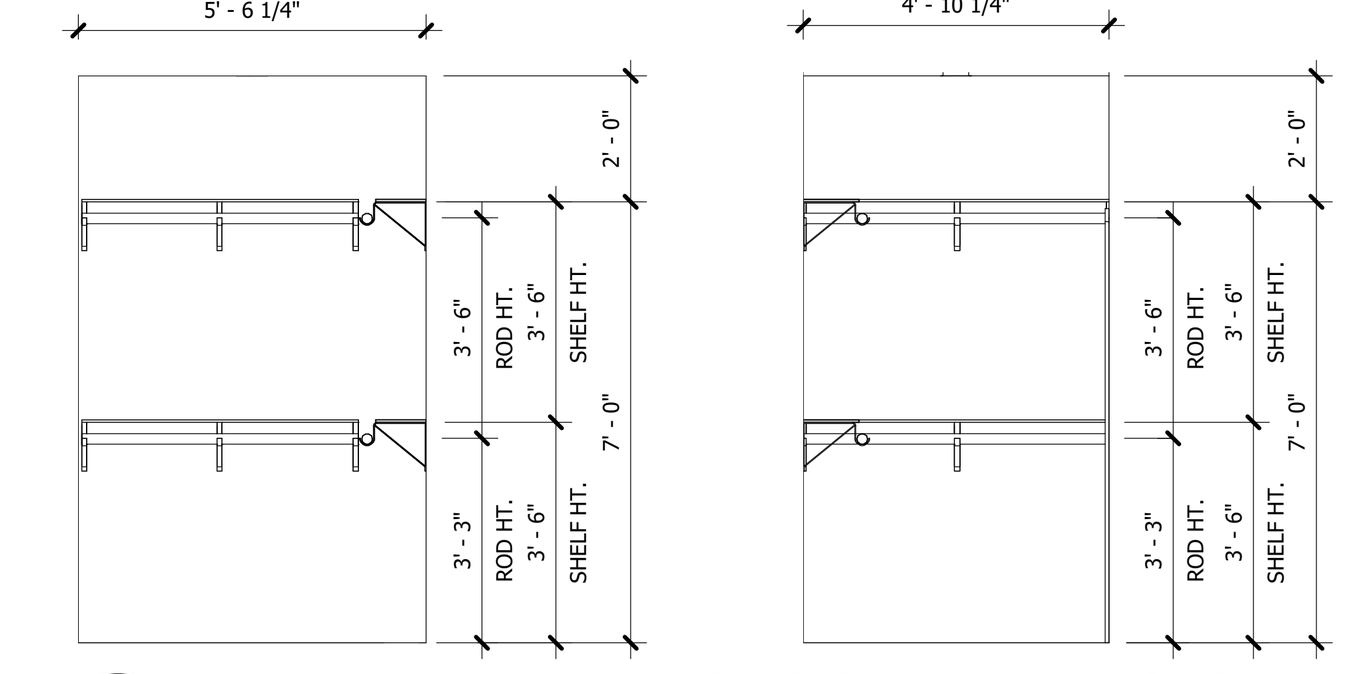

19 UNIT D, D-F1 - CLOSET 1 - 1 & 2
SCALE : 1/4" = 1'-0"

### UNIT PLAN AND INTERIOR ELEVATION KEYNOTES

| Number | Description |
|---|---|
| 1 | WASHER |
| 2 | DRYER |
| 3 | RANGE / OVEN |
| 4 | REFRIGERATOR |
| 5 | DISHWASHER |
| 6 | KITCHEN SINK / FAUCET |
| 7 | TOILET |
| 8 | VANITY - SEE ELEVATION FOR SIZE |
| 9 | 30"X60" TUB |
| 10 | 36"X60" SHOWER BASE |
| 11 | 32"X60" SHOWER BASE |
| 12 | ACCESSIBLE THRESHOLD - MARBLE |
| 13 | ACCESSIBLE THRESHOLD - ALUMINIUM |
| 14 | SOFFIT OVER REFRIGERATOR AND BEHIND CABINET |
| 15 | LINEN SHELVES (5) PER SPECIFICATION |
| 16 | WIRE SHEVLING |
| 17 | KNEE WALL BELOW COUNTERTOP |
| 18 | BALCONY RAILING @ 42" HIGH |
| 19 | WALL MOUNTED HOT WATER HEATER |
| 20 | HVAC UNIT MOUNTED ON WALL |
| 21 | PRE ROCK BEHIND BATHING FIXTURES |
| 22 | CUBBIE CABINETS |
| 23 | MICROWAVE WITH RECIRCULATION HOOD |
| 24 | WALL TILE BETWEEN CONTERTOP AND WALL CABINET. SEE 1D DRAWING |
| 25 | BLOCKING FOR GRAB BAR. SEE FIG. 4- SHEET A0.06 |
| 26 | 24" HORIZONTAL GRAB BAR @ TUB BACK WALL. SEE FIG. 4 - SHEET A0.06 |
| 27 | SHOWER ROD |
| 28 | NOT USED |
| 29 | PAINTED FRAME MIRROR |
| 30 | TOILET TISSUE HOLDER @ 26" A.F.F. |
| 31 | 30" TOWEL BAR |
| 32 | ROBE HOOK |
| 33 | SHOWER HEAD |
| 34 | VANITY SINK BOWL |

**NOTES:**

1. SEE SPECIFICATIONS FOR ADDITIONAL INFORMATION.
2. ALL DOOR HARDWARE TO BE COMPLIANT WITH THE FEDERAL FAIR HOUSING ACT (FHA).
3. DOORS SHALL BE OPENABLE WITH NO MORE THAN ONE RELEASING OPERATION.
4. PROVIDE ACCESSIBLE THRESHOLDS AT ALL DOORS.
5. ALL UNITS ARE ADAPTABLE PER FHA. SEE SHEET A0.06 FOR ADDITIONAL INFORMATION.
6. ALL DIMENSIONS ARE TO ROUGH FRAMING U.N.O.
7. ALL WALLS ARE 2X4 STUDS UNLESS NOTED OTHERWISE.
8. ALL TENANT SEPERATIONS AND CORRIDOR WALLS ARE 2X6 UNLESS NOTED OTHERWISE.
9. PATIO AT FIRST FLOOR 4" BELOW UNIT FINISH FLOOR.
10. BALCONIES ARE FLUSH WITH GYPCRETE TOPPING. SEE DETAIL.
11. ALL TOILETS SET ON NEOPRENE GASKET WITH INSULATED PIPE TRAP.
12. ALL KITCHEN APPLIANCES TO HAVE STAINLESS STEEL FRONTS.
13. WHERE DRAWINGS ARE IN CONFLICT WITH OTHER DRAWINGS, CONTRACTOR SHALL NOTIFY THE ARCHITECT.
14. PROVIDE BLOCKING FOR GRAB BARS IN ALL BATHROOMS
15. DIMENSION TO STUD UNLESS OTHERWISE NOTED
16. DIMESNION TO FINISH @ CABINETS
17. PROVIDE BLOCKING FOR TV WALL MOUNT, CENTER AT 60" A.F.F.
18. ALL BATHROOM VANITES ARE 21" IN DEPTH

| ROOM FINISH MATERIAL CODE | |
|---|---|
| CPT | CARPET |
| CT | CERAMIC TILE |
| CONC | CONCRETE |
| GWB | GYPSUM WALL BOARD |
| MR GWB | MOISTURE RESISTANT GWB |
| V | SHEET VINYL |
| VWP | VINYL WOOD PLANK |
| VCT | VINYL COMPOSITE TILE |
| WD | WOOD |

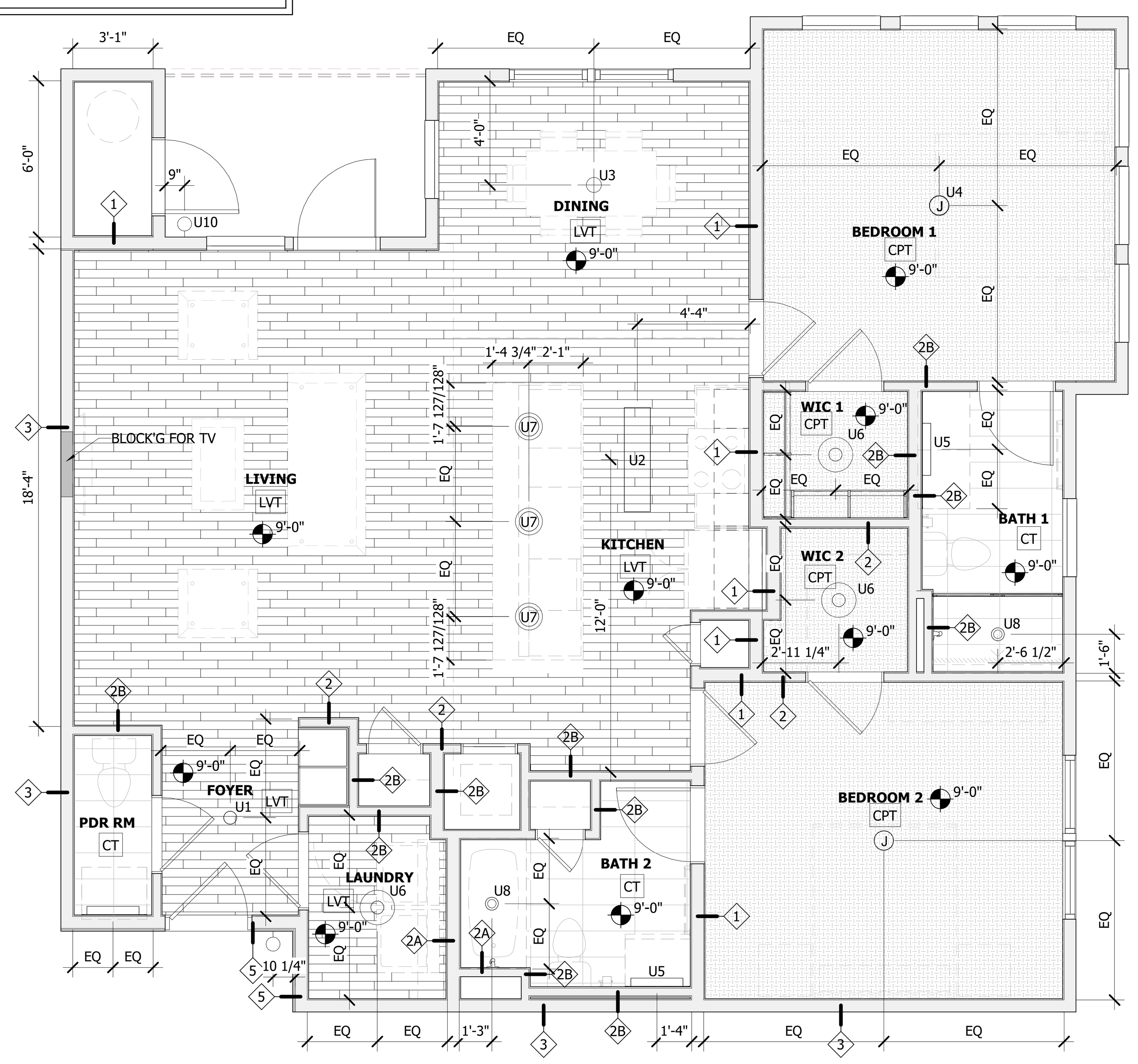


| ROOM # |
|---|
| UNIT D |
| 105 |
| 106 |
| 113 |
| 114 |
| 143 |
| 144 |
| 205 |
| 206 |
| 213 |
| 214 |
| 229 |
| 230 |
| 243 |
| 244 |
| 305 |
| 306 |
| 313 |
| 314 |
| 329 |
| 330 |
| 343 |
| 344 |
| 405 |
| 406 |
| 413 |
| 414 |
| 429 |
| 430 |
| 443 |
| 444 |
| Grand total: 30 |

3 UNIT D RCP
SCALE : 1/4" = 1'-0"

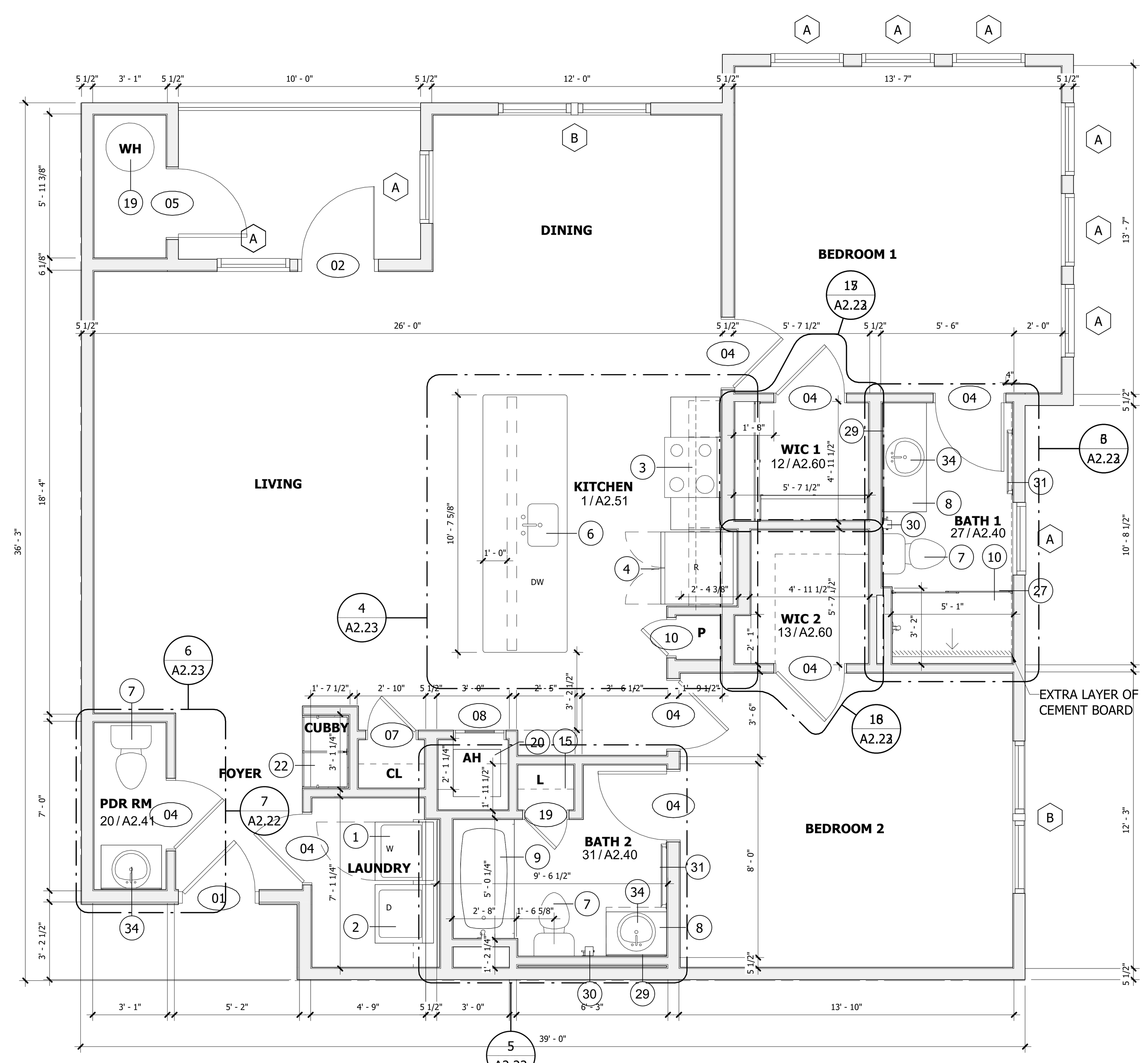


1 UNIT - D
SCALE : 1/4" = 1'-0"

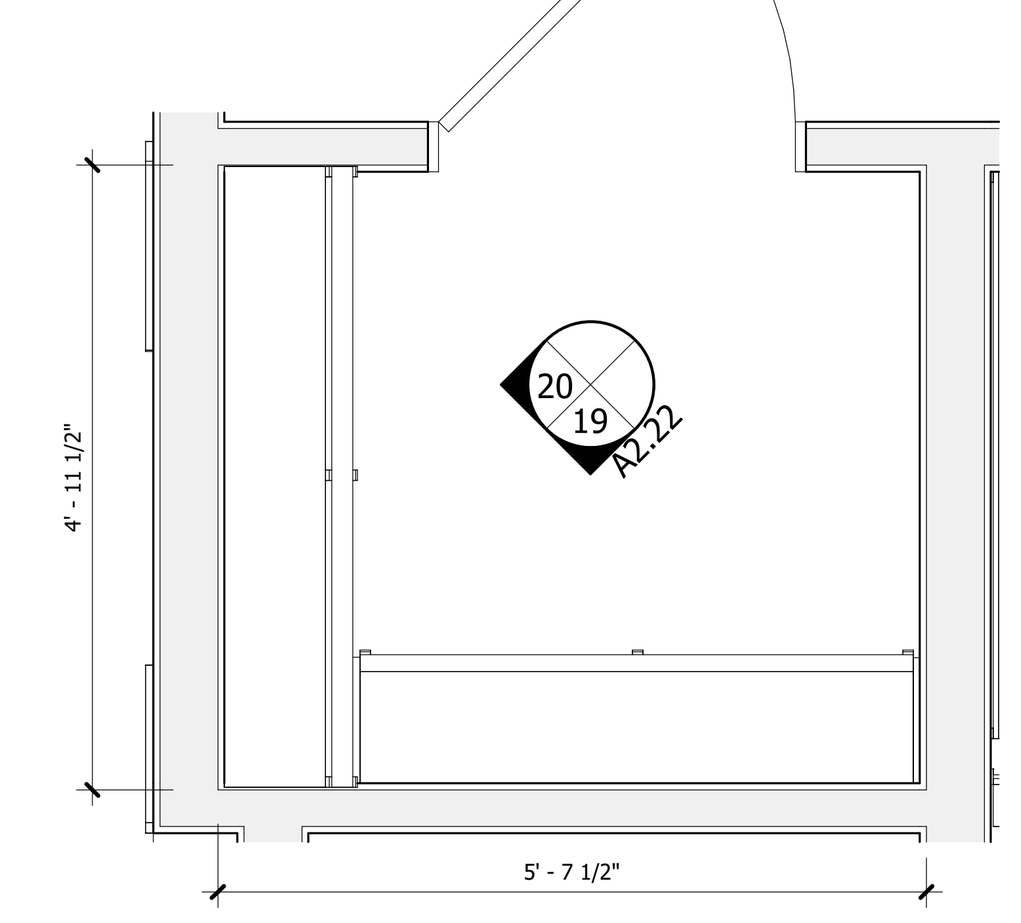

17 UNIT D, D-F1 - CLOSET 1 - PLAN
SCALE : 1/2" = 1'-0"

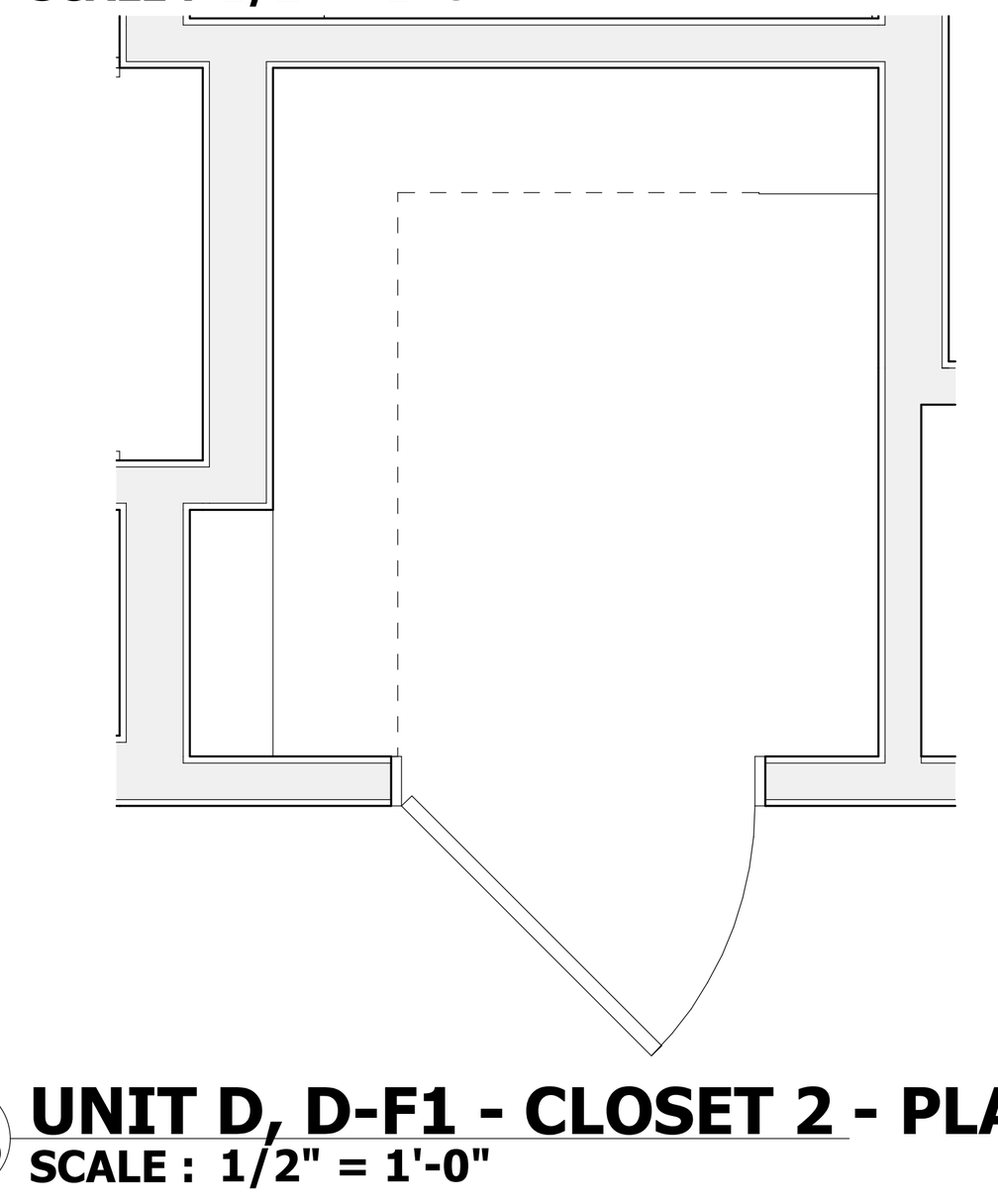

18 UNIT D, D-F1 - CLOSET 2 - PLAN
SCALE : 1/2" = 1'-0"

ALL REPORTS, PLANS, SPECIFICATIONS AND COMPUTER FILES RELATING TO THIS PROJECT ARE THE PROPERTY OF THE MARTIN ARCHITECTURAL GROUP. THE MARTIN ARCHITECTURAL GROUP RETAINS ALL COMMON LAW, STATUTE AND OTHER RESERVED RIGHTS INCLUDING THE COPYRIGHT THERETO. REPRODUCTION OF THE MATERIAL HEREIN OR SUBSTANTIAL USE WITHOUT WRITTEN PERMISSION OF THE MARTIN ARCHITECTURAL GROUP VIOLATES THE COPYRIGHT LAWS OF THE UNITED STATES AND WILL BE SUBJECT TO LEGAL PROSECUTION.
©2022, The Martin Architectural Group, P.C.

REGISTERED ARCHITECT PENNSYLVANIA DREW ROMANIC No. RA407676

THE MARTIN ARCHITECTURAL GROUP, P.C.
ARCHITECTS AND LAND PLANNERS
A PROFESSIONAL CORPORATION
240 NORTH 22ND STREET, PHILADELPHIA, PA 19103
P (215) 665-1080 F (215) 561-5064

| | |
|---|---|
| P.A.: | DREW ROMANIC |
| P.M.: | JASON DECAMPLI |
| DRAWN BY: | MAG |
| PROJECT NO: | 1362-12 |

| NO. | REVISION | DATE |
|---|---|---|
| 1 | PERMIT SET | 12/20/22 |

# UNIT PLANS (UNIT D, D-F1)
## Granite Run Apartment 02
MIDDLETOWN TOWNSHIP, PA

| | |
|---|---|
| SCALE: | AS NOTED |
| DATE: | 12/31/2017 |

# A2.22

©2022, The Martin Architectural Group, P.C.

## DOOR SCHEDULE - DWELLING UNIT

| MARK | DOOR TYPE | WIDTH | HEIGHT | DOOR MATERIAL | FRAME TYPE | FRAME MATERIAL | FIRE RATING | REMARKS |
|---|---|---|---|---|---|---|---|---|
| 01 | UA | 3'-0" | 7'-0" | MTL | F1 | MTL | 20 min. | UNIT ENTRY - SPRING HINGES |
| 02 | UE | 3'-0" | 7'-0" | VY | F1 | VY | | BALCONY DOOR |
| 03 | UB | 3'-0" | 6'-8" | MTE | F1 | WD | | |
| 04 | UB | 2'-10" | 6'-8" | MTE | F1 | WD | | |
| 05 | UA | 2'-10" | 6'-8" | EM | F1 | MTL | | UNIT EXT. MECH DOOR |
| 06 | UB | 2'-6" | 6'-8" | MTE | F1 | WD | | |
| 07 | UB | 2'-0" | 6'-8" | MTE | F1 | WD | | |
| 08 | UC | 2'-0" | 6'-8" | MTE | F1 | WD | | LOUVERED AIR HANDLER |
| 09 | UC | 1'-6" | 6'-8" | MTE | F1 | WD | | LOUVERED AIR HANDLER |
| 10 | UB | 1'-6" | 6'-8" | MTE | F1 | WD | | |
| 11 | UB | 1'-4" | 6'-8" | MTE | F1 | WD | | |
| 12 | UDD | 4'-0" | 6'-8" | MTE | | WD | | SLIDING BARN DOOR |
| 13 | UBB | 5'-0" | 6'-8" | MTE | F2 | WD | | DOUBLE SWING DOOR |
| 14 | UCC | 5'-0" | 6'-8" | MTE | F2 | WD | | LOUVERED BI-FOLD |
| 15 | UCC | 6'-0" | 6'-8" | MTE | F2 | WD | | LOUVERED BI-FOLD |
| 19 | UB | 1'-9" | 6'-8" | MTE | F1 | WD | | |
| E | | 3'-0" | 7'-0" | | | | | |
| EE | | 6'-0" | 7'-0" | | | | | |
| F | | 6'-0" | 7'-0" | | | | | *RATED GLASS |

## ROOM FINISH SCHEDULE

| SPACE | FLOOR | WALL | CEILING | HEIGHT | REMARKS |
|---|---|---|---|---|---|
| KITCHEN | 3 | A | 1 | 9'-0" | |
| LIVING RM. | 3 | A | 1 | 9'-0" | |
| BEDROOMS | 1 | A | 1 | 9'-0" | |
| DEN | 3 | A | 1 | 9'-0" | |
| BATHS | 4 | B/C | 2 | 9'-0" | |
| CLOSETS | | A | 1 | 9'-0" | FLOORING: MATCH ADJ. |
| LAUNDRY | 3 | A | 2 | 9'-0" | FLOORING: MATCH ADJ. |
| UNIT-HVAC | | A | 1 | 9'-0" | FL.: GYPCRETE PAINT-LIGHT GRAY |

### MATERIAL CODE

| FLR. / BASE | | WALL | | CEILING | |
|---|---|---|---|---|---|
| 1 | CPT / WD | A | G.W.B. | 1 | G.W.B. |
| 2 | | B | MR.G.W.B. | 2 | MR.G.W.B. |
| 3 | LVT / WD | C | CT-2 | 3 | |
| 4 | CT / CT | D | | 4 | |
| 5 | | E | | 5 | |
| 6 | | F | | 6 | |
| 7 | | G | | 7 | |
| 8 | | H | | 8 | |

MATERIAL GLOSSARY

| | |
|---|---|
| CPT | CARPET - SHAW GULF WINDS - COLOR: 532 MINERAL |
| CT-1 | CERAMIC TILE - 12X24 FLORIM MATERIA - COLOR: HONED 02 |
| CT-2 | CERAMIC TILE - 12X24 FLORIM MATERIA - COLOR: STONE CALACATTA |
| G.W.B. | GYPSUM WALL BOARD |
| MR.G.W.B. | MOISTURE RESISTANT G.W.B. |
| LVT | VINYL WOOD PLANK - SHAW TERRAIN 12 MIL - COLOR: 766 ECHO |
| WD. | WOOD |

## WINDOW SCHEDULE

| MARK | WIDTH | HEIGHT | WINDOW TYPE | CONSTRUCTION TYPE | COMMENTS |
|---|---|---|---|---|---|
| A | 3'-0" | 6'-0" | SINGLE HUNG | VINYL | All windows to be provided with opening limiters. See specifications. |
| B | 6'-3 1/2" | 6'-0" | SINGLE HUNG | VINYL | All windows to be provided with opening limiters. See specifications. |

## FRAME TYPES

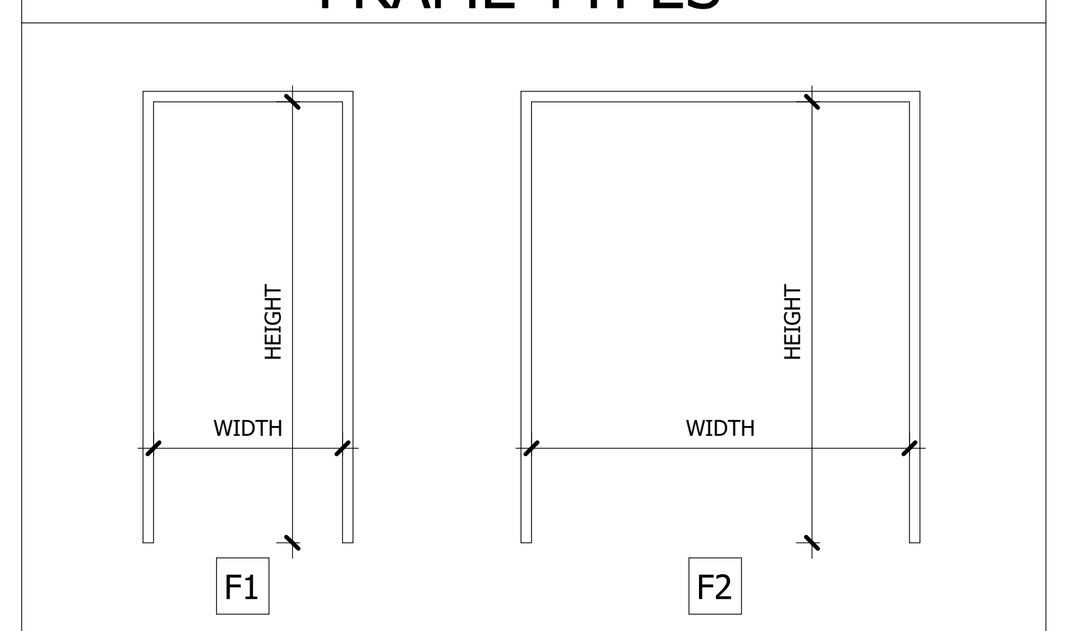


DOOR/FRAME MATERIAL KEY:

| | |
|---|---|
| AL | ALUMINUM |
| EM | EXTERIOR METAL |
| GL | GLASS |
| HC | HOLLOW CORE |
| HM | HOLLOW METAL |
| MTL | METAL |
| SC | SOLID CORE |
| SR | STILE & RAIL |
| VY | VINYL |
| WD | WOOD |
| MTE | MASONITE |

## UNIT DOOR TYPES

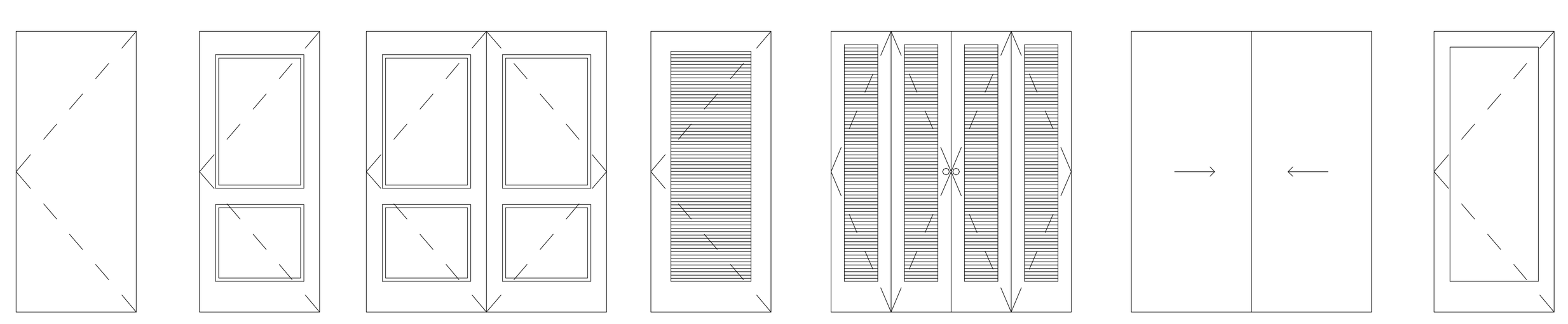


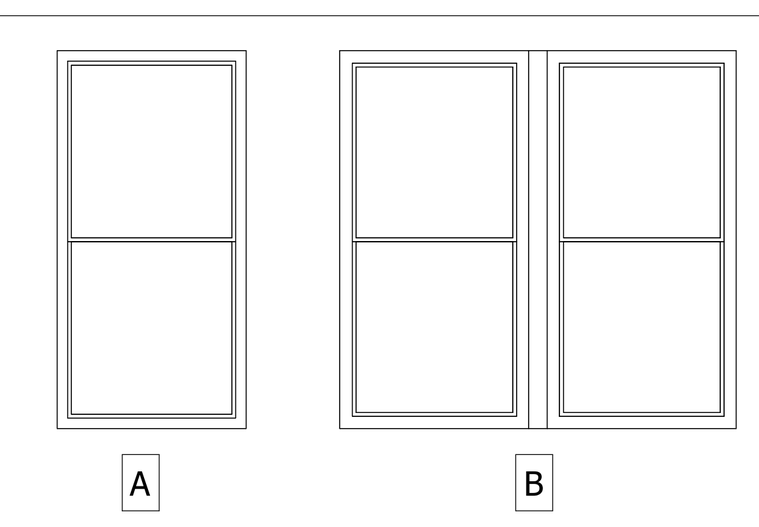


NOTE: (2) 2X6 FRT STUDS PROVIDED BETWEEN GROUP WINDOWS. (TYPICAL) PROVIDE 4" LIMITATION FOR WINDOW LIMITERS ON ALL WINDOWS

## LIGHT FIXTURE LEGEND

| | |
|---|---|
| U1 | LITHONIA FMSATL-16-20840-BN; SEMI FLUSH MOUNT |
| U2 | LITHONIA FMFL-30840-SATL-BN; LINEAR FLUSH MOUNT |
| U3 | LITHONIA DFMADRL-14-F01; FMPANL-14-20840M6; LED SURFACE MOUNT DRUM |
| U4 | SATCO COVER PLATE |
| U5 | PROGRESS P300187-009-30; LED BATH VANITY |
| U6 | LITHONIA FMMUSL-9-14840-WH; LED CLOSET MUSHROOM |
| U7 | LITHONIA MDPC-BNP-M6; DGDT 1003 M6 |
| U8 | COOPER SMD6R-12-930-WH; 1200 LUMEN SLIM SURFACE (120 VOLT ONLY) |
| U9 | NUVO 62-1161; 7" LED FLUSH MOUNT DISCK |
| U10 | LITHONIA OLWPLED-P1-40K-120-PE-BZ; LED MINI WALL PACK |

## UNIT PLAN AND INTERIOR ELEVATION KEYNOTES

| Number | Description |
|---|---|
| 1 | WASHER |
| 2 | DRYER |
| 3 | RANGE / OVEN |
| 4 | REFRIGERATOR |
| 5 | DISHWASHER |
| 6 | KITCHEN SINK / FAUCET |
| 7 | TOILET |
| 8 | VANITY - SEE ELEVATION FOR SIZE |
| 9 | 30"X60" TUB |
| 10 | 36"X60" SHOWER BASE |
| 11 | 32"X60" SHOWER BASE |
| 12 | ACCESSIBLE THRESHOLD - MARBLE |
| 13 | ACCESSIBLE THRESHOLD - ALUMINIUM |
| 14 | SOFFIT OVER REFRIGERATOR AND BEHIND CABINET |
| 15 | LINEN SHELVES (5) PER SPECIFICATION |
| 16 | WIRE SHEVLING |
| 17 | KNEE WALL BELOW COUNTERTOP |
| 18 | BALCONY RAILING @ 42" HIGH |
| 19 | WALL MOUNTED HOT WATER HEATER |
| 20 | HVAC UNIT MOUNTED ON WALL |
| 21 | PRE ROCK BEHIND BATHING FIXTURES |
| 22 | CUBBIE CABINETS |
| 23 | MICROWAVE WITH RECIRCULATION HOOD |
| 24 | WALL TILE BETWEEN CONTERTOP AND WALL CABINET. SEE 1D DRAWING |
| 25 | BLOCKING FOR GRAB BAR. SEE FIG. 4-SHEET A0.06 |
| 26 | 24" HORIZONTAL GRAB BAR @ TUB BACK WALL. SEE FIG. 4 - SHEET A0.06 |
| 27 | SHOWER ROD |
| 28 | NOT USED |
| 29 | PAINTED FRAME MIRROR |
| 30 | TOILET TISSUE HOLDER @ 26" A.F.F. |
| 31 | 30" TOWEL BAR |
| 32 | ROBE HOOK |
| 33 | SHOWER HEAD |
| 34 | VANITY SINK BOWL |

**NOTES:**

1. SEE SPECIFICATIONS FOR ADDITIONAL INFORMATION.
2. ALL DOOR HARDWARE TO BE COMPLIANT WITH THE FEDERAL FAIR HOUSING ACT (FHA).
3. DOORS SHALL BE OPENABLE WITH NO MORE THAN ONE RELEASING OPERATION.
4. PROVIDE ACCESSIBLE THRESHOLDS AT ALL DOORS.
5. ALL UNITS ARE ADAPTABLE PER FHA. SEE SHEET A0.06 FOR ADDITIONAL INFORMATION.
6. ALL DIMENSIONS ARE TO ROUGH FRAMING U.N.O.
7. ALL WALLS ARE 2X4 STUDS UNLESS NOTED OTHERWISE.
8. ALL TENANT SEPERATIONS AND CORRIDOR WALLS ARE 2X6 UNLESS NOTED OTHERWISE.
9. PATIO AT FIRST FLOOR 4" BELOW UNIT FINISH FLOOR.
10. BALCONIES ARE FLUSH WITH GYPCRETE TOPPING. SEE DETAIL.
11. ALL TOILETS SET ON NEOPRENE GASKET WITH INSULATED PIPE TRAP.
12. ALL KITCHEN APPLIANCES TO HAVE STAINLESS STEEL FRONTS.
13. WHERE DRAWINGS ARE IN CONFLICT WITH OTHER DRAWINGS, CONTRACTOR SHALL NOTIFY THE ARCHITECT.
14. PROVIDE BLOCKING FOR GRAB BARS IN ALL BATHROOMS
15. DIMENSION TO STUD UNLESS OTHERWISE NOTED
16. DIMESNION TO FINISH @ CABINETS
17. PROVIDE BLOCKING FOR TV WALL MOUNT, CENTER AT 60" A.F.F.
18. ALL BATHROOM VANITES ARE 21" IN DEPTH

### ROOM FINISH MATERIAL CODE

| | |
|---|---|
| CPT | CARPET |
| CT | CERAMIC TILE |
| CONC | CONCRETE |
| GWB | GYPSUM WALL BOARD |
| MR GWB | MOISTURE RESISTANT GWB |
| V | SHEET VINYL |
| VWP | VINYL WOOD PLANK |
| VCT | VINYL COMPOSITE TILE |
| WD | WOOD |

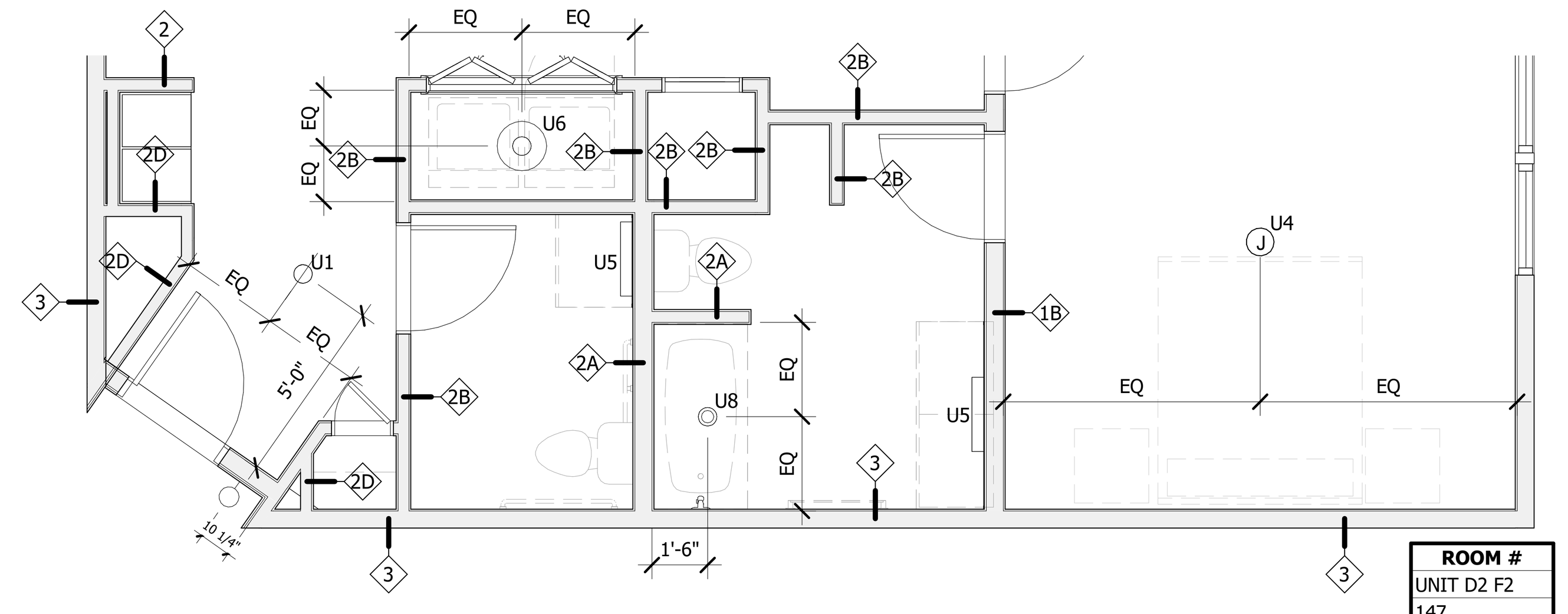


**2A UNIT D2-F2 RCP**
SCALE : 1/4" = 1'-0"

| ROOM # |
|---|
| UNIT D2 F2 |
| 147 |
| 247 |
| 347 |
| 447 |
| Grand total: 4 |

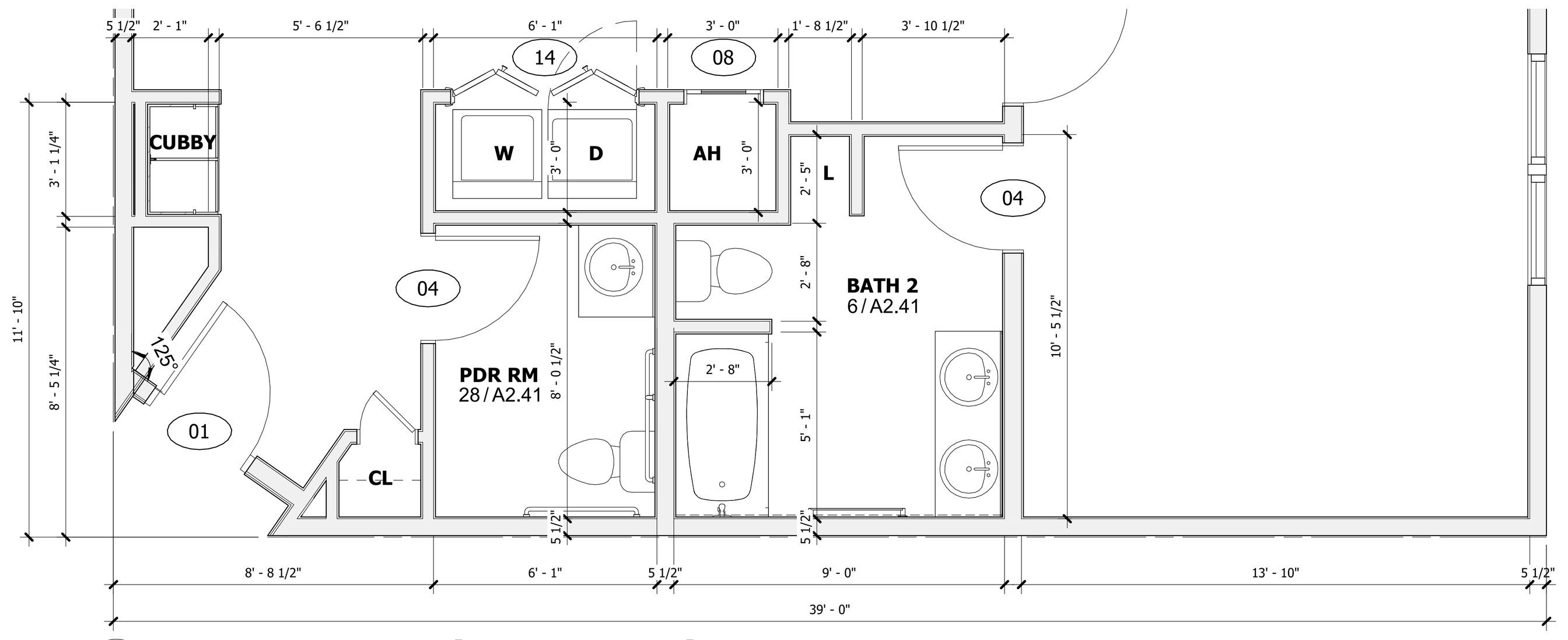


**2 UNIT - D2 - F2 (ALT. FOYER)**
SCALE : 1/4" = 1'-0"

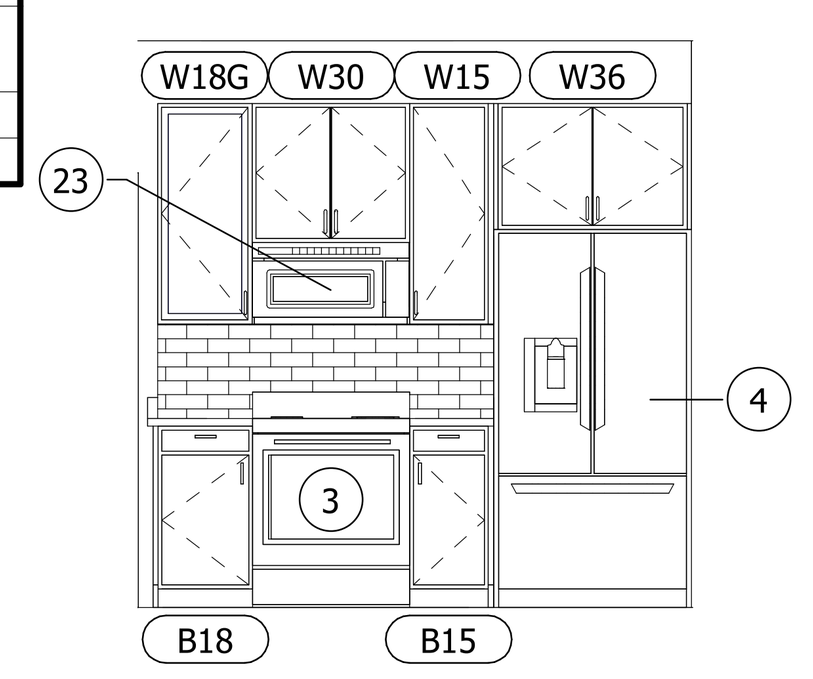


**7 UNIT D2-F1, D2-F2 - KITCHEN 1**
SCALE : 1/4" = 1'-0"

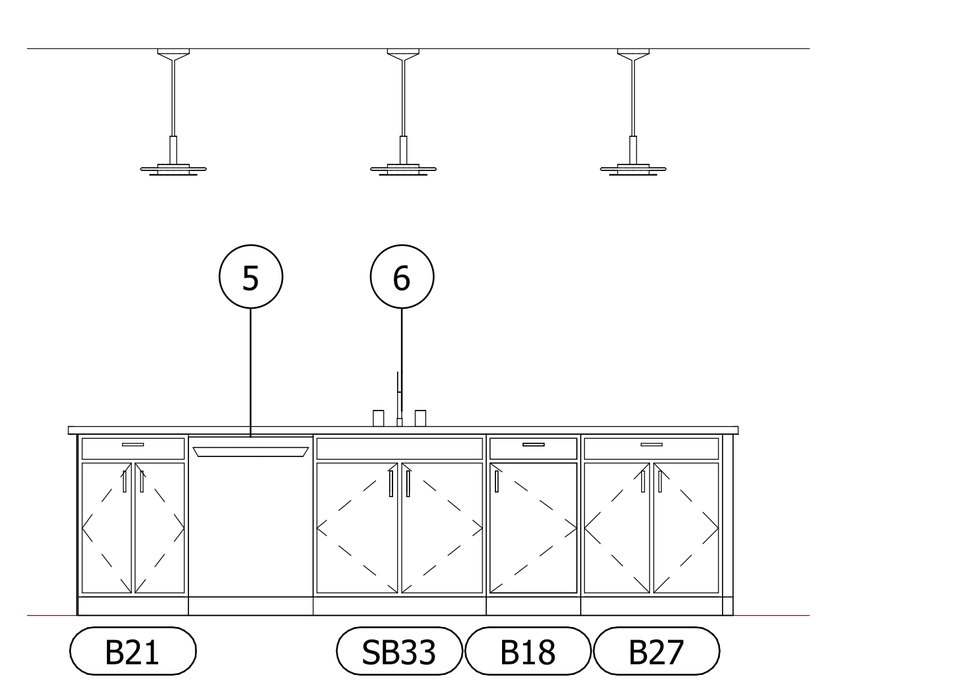


**8 UNIT D2-F1, D2-F2 - KITCHEN 2**
SCALE : 1/4" = 1'-0"

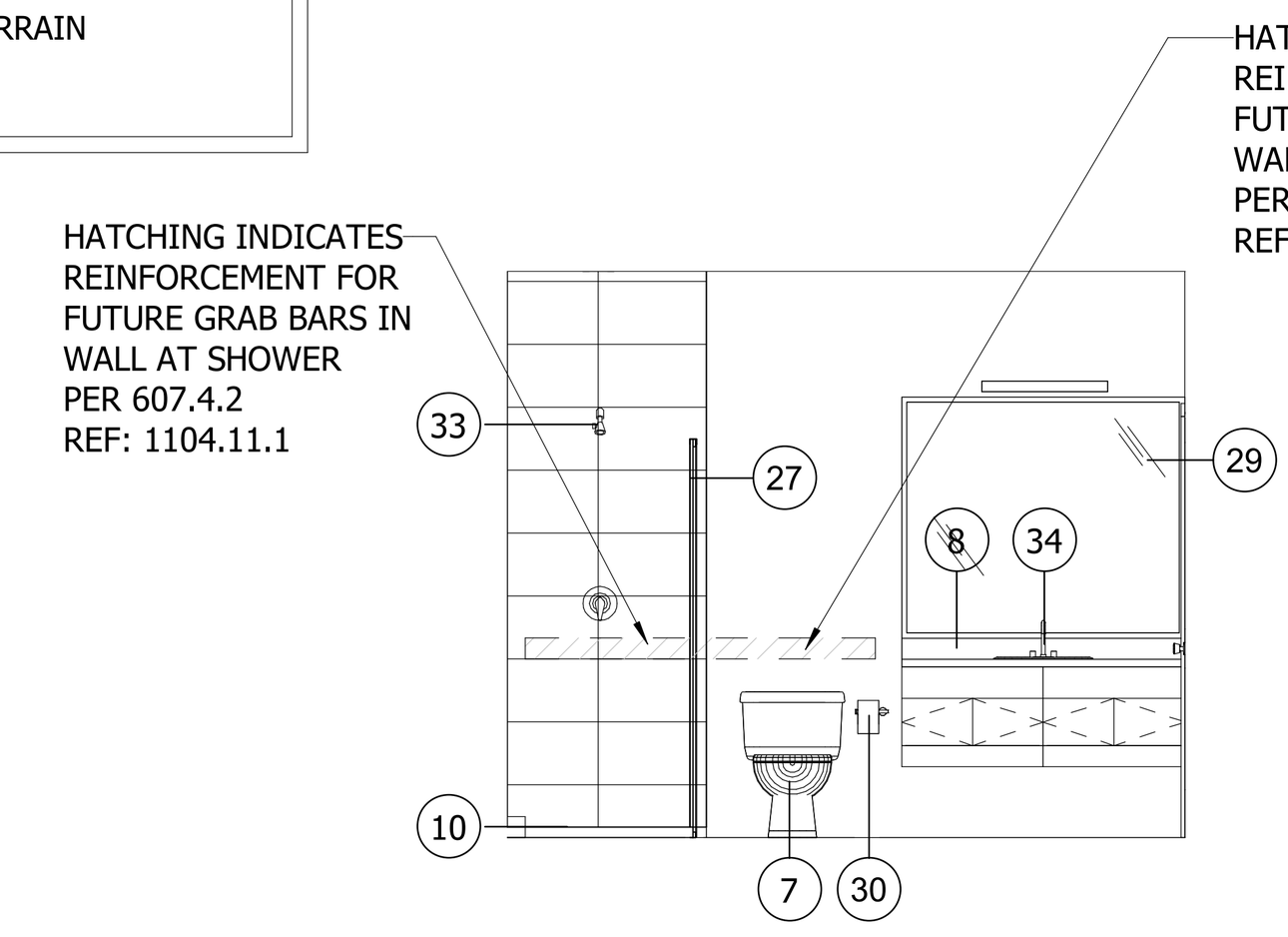


**9 UNIT D2-F1, D2-F2 - BATH 2 - 1**
SCALE : 1/4" = 1'-0"

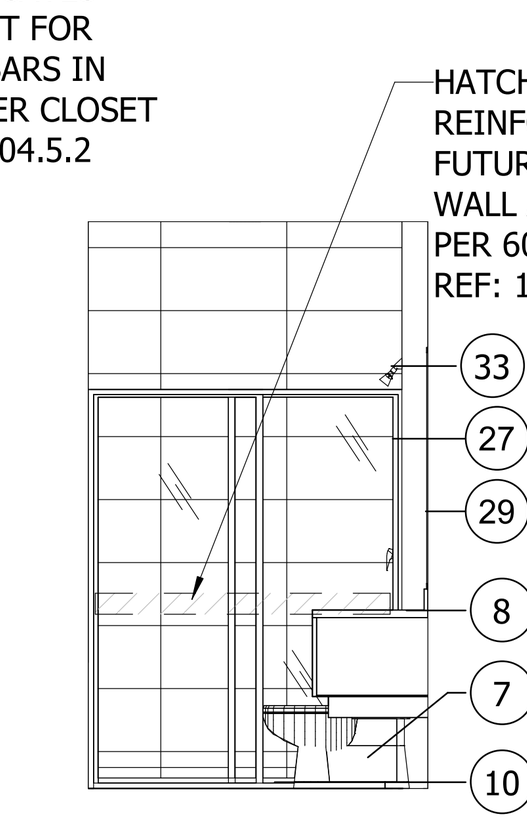


**10 UNIT D2-F1, D2-F2 - BATH 2 - 2**
SCALE : 1/4" = 1'-0"

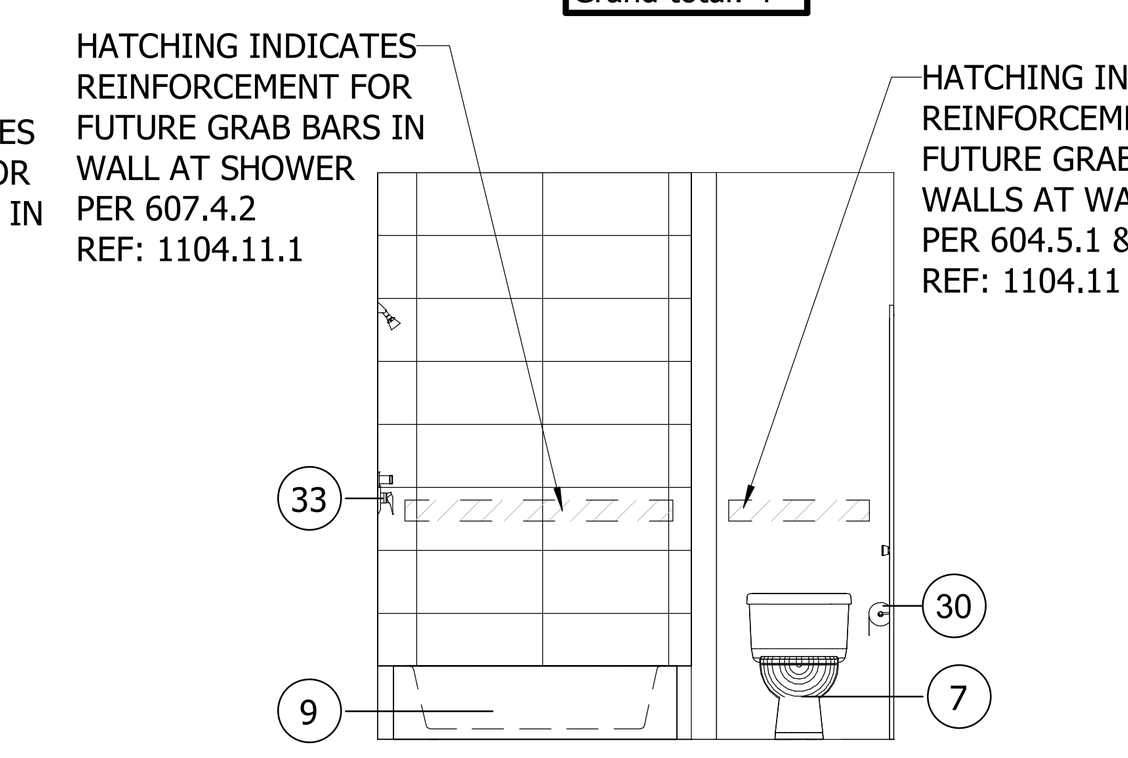


**11 UNIT D2-F1, D2-F2 - BATH 1 - 1**
SCALE : 1/4" = 1'-0"

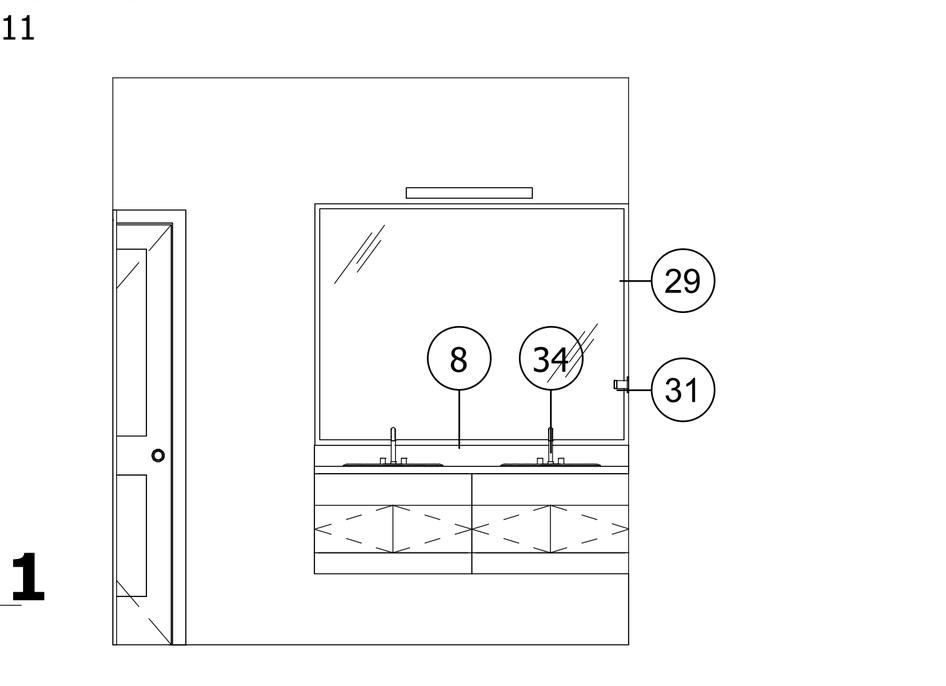

**12 UNIT D2-F1, D2-F2 - BATH 1 - 2**
SCALE : 1/4" = 1'-0"

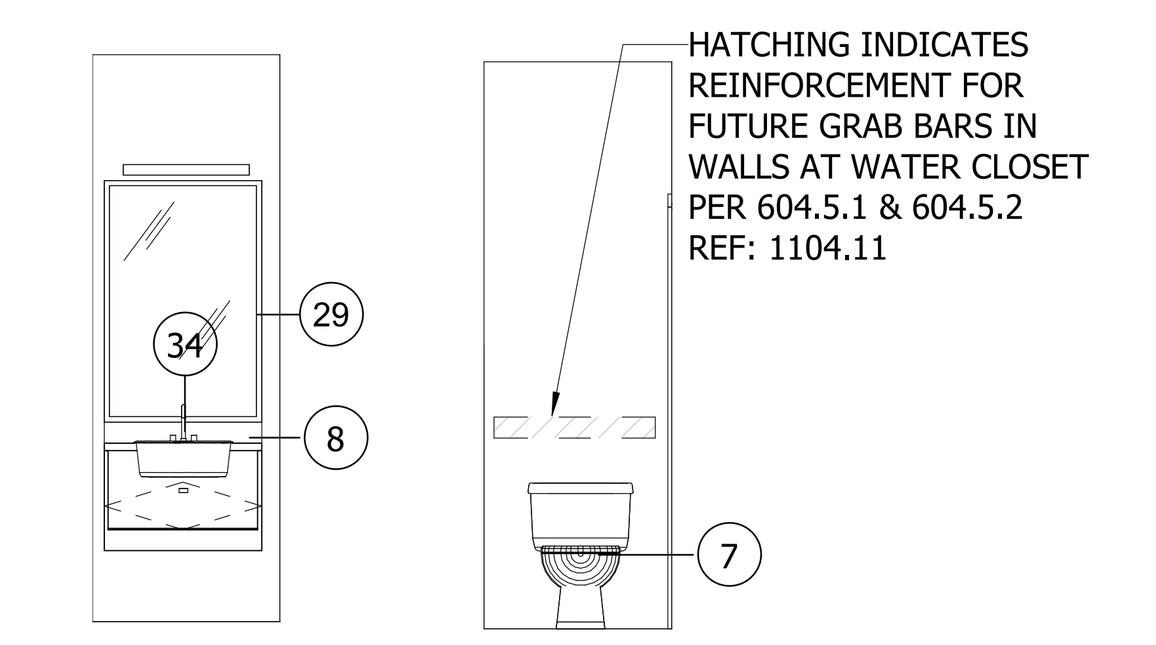


**13 UNIT D2-F1, D2-F2 - PR 1 & 2**
SCALE : 1/4" = 1'-0"

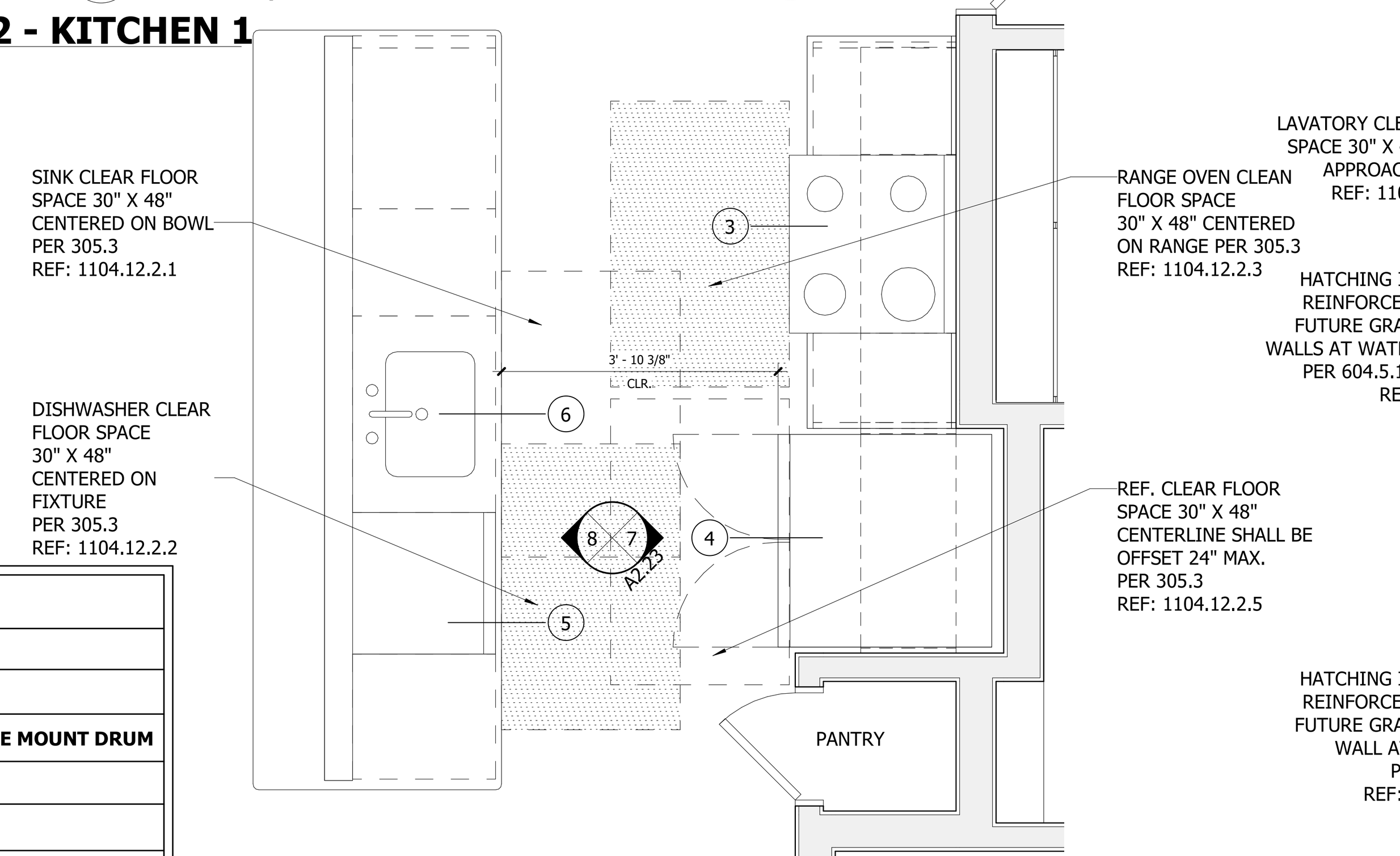


**4 UNIT D2-F1, D2-F2 - KITCHEN - PLAN**
SCALE : 1/2" = 1'-0"

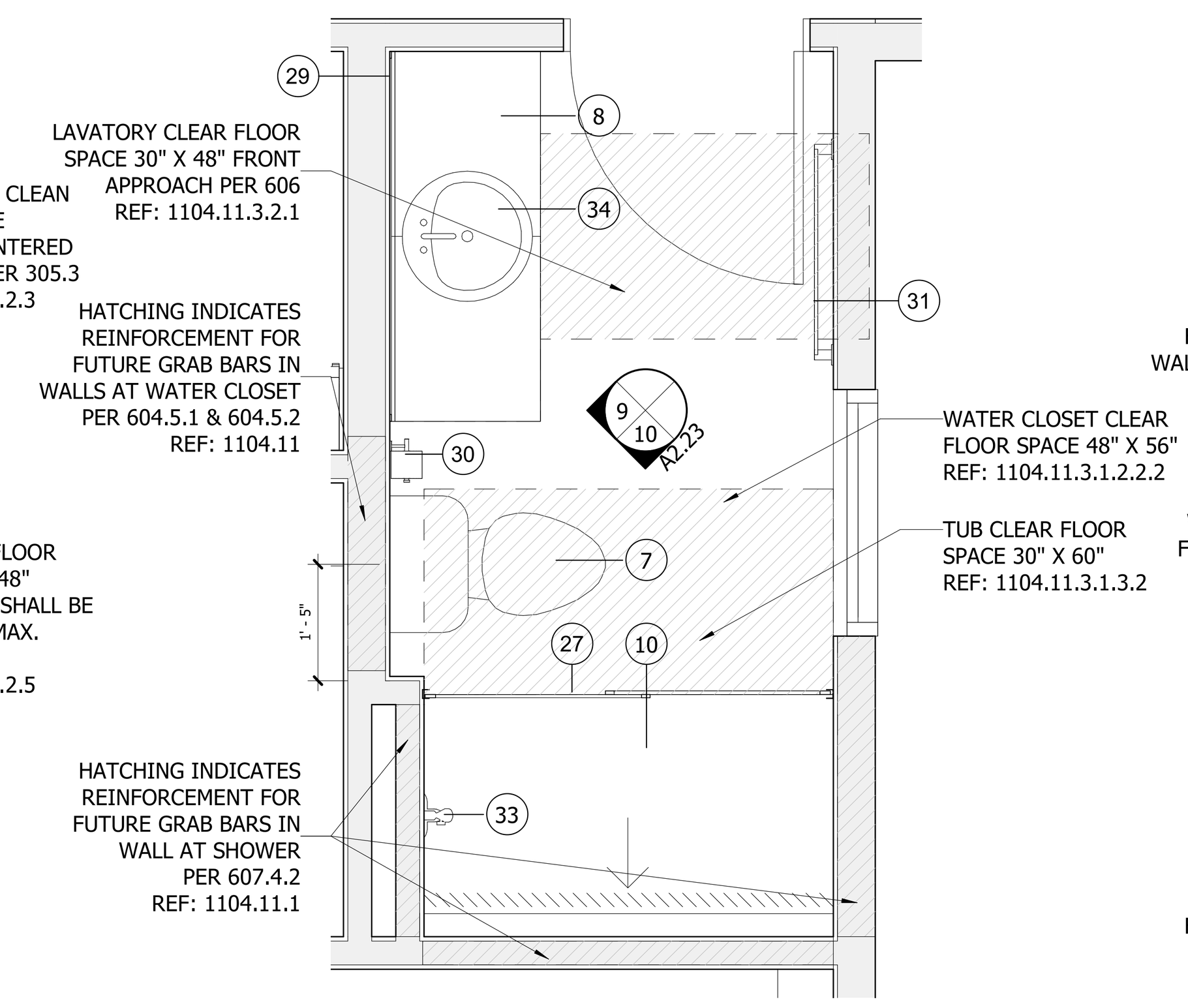


**3 UNIT D2-F1, D2-F2 - BATHROOM 2 - PLAN**
SCALE : 1/2" = 1'-0"

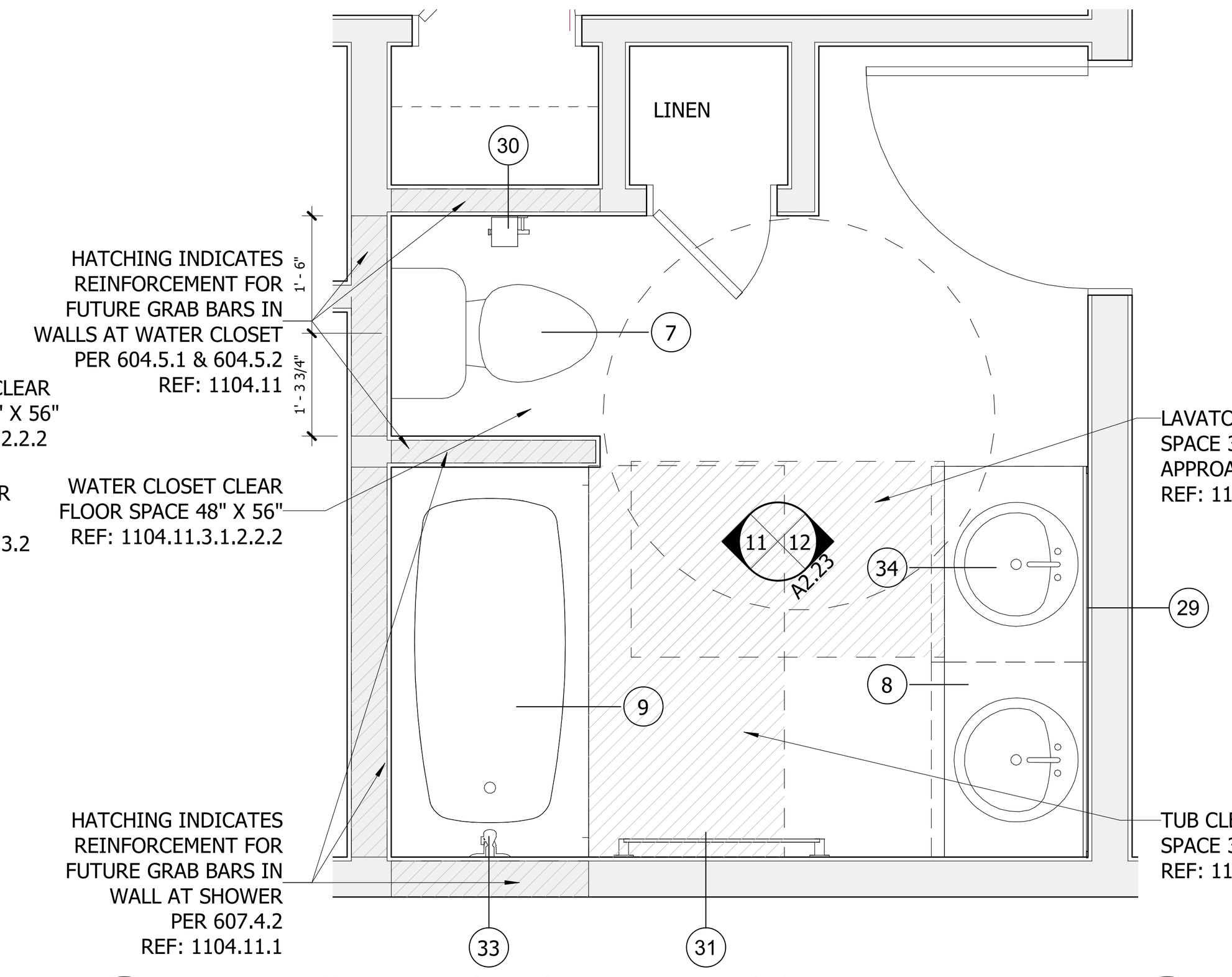


**5 UNIT D2-F1, D2-F2 - BATHROOM 1 - PLAN**
SCALE : 1/2" = 1'-0"

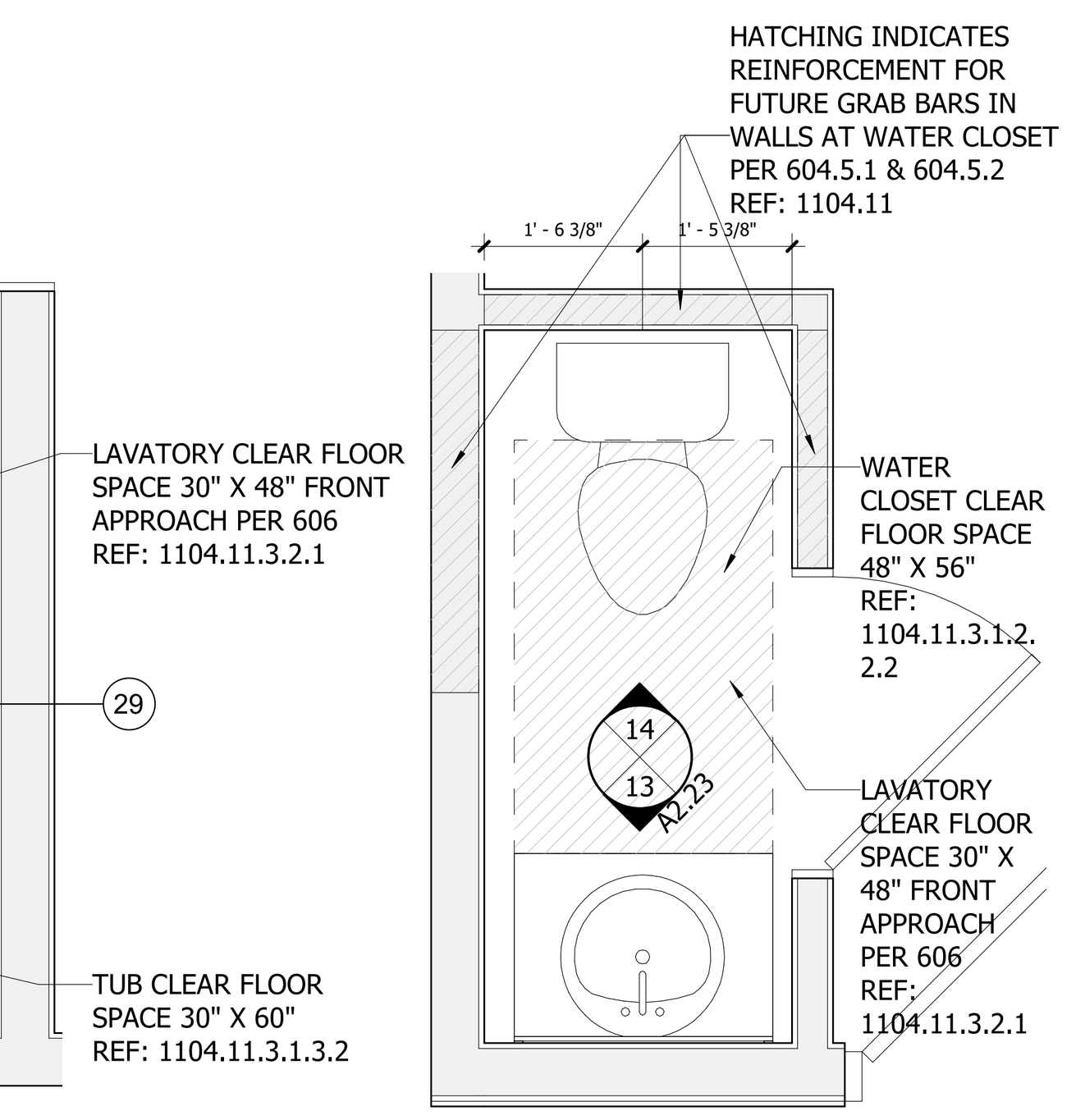


**6 UNIT D2-F1, D2-F2 - PR - PLAN**
SCALE : 1/2" = 1'-0"

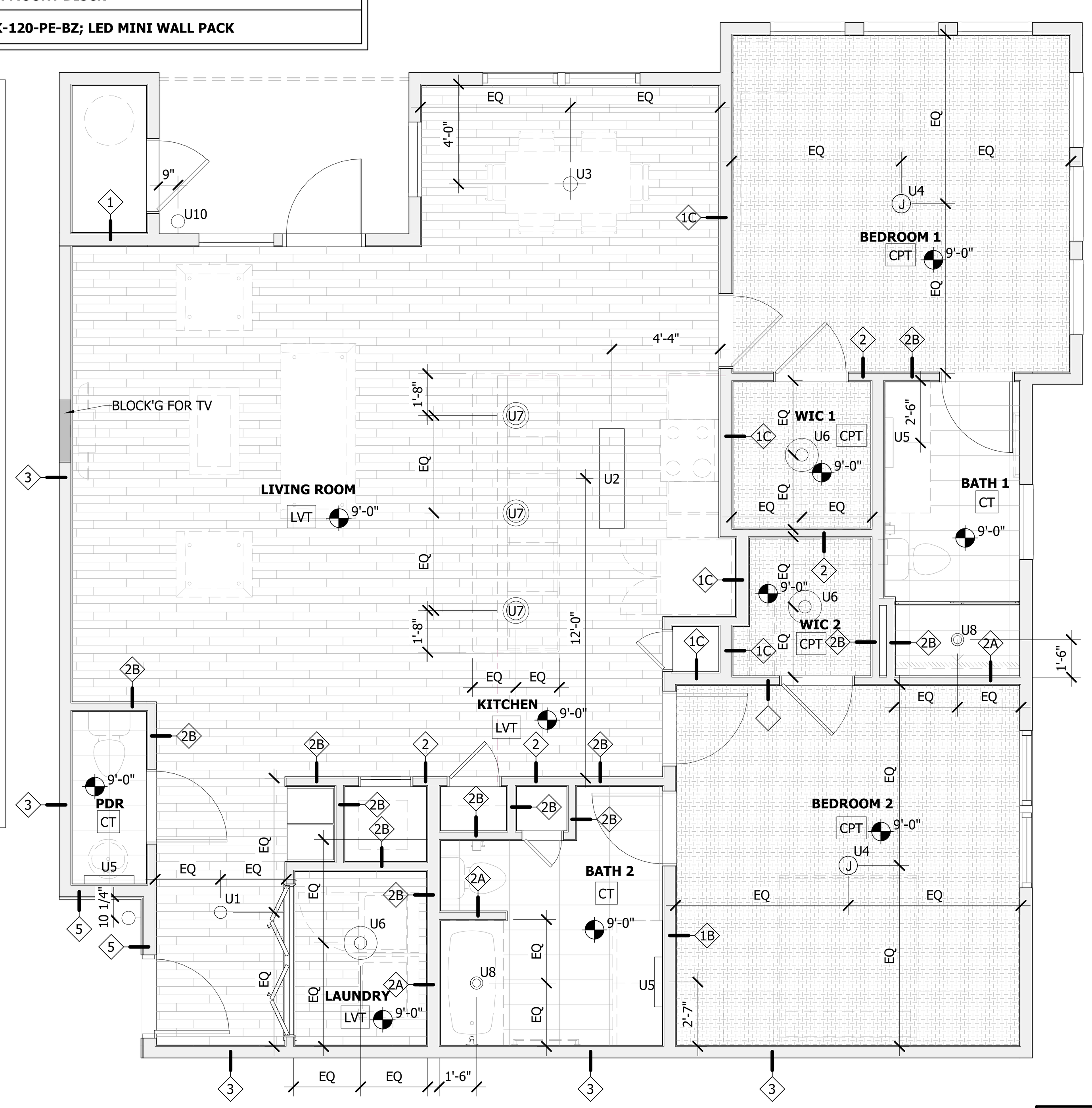


**1A UNIT D2-F1 RCP**
SCALE : 1/4" = 1'-0"

| ROOM # |
|---|
| UNIT D2 F1 |
| 118 |
| 218 |
| 318 |
| 418 |
| Grand total: 4 |

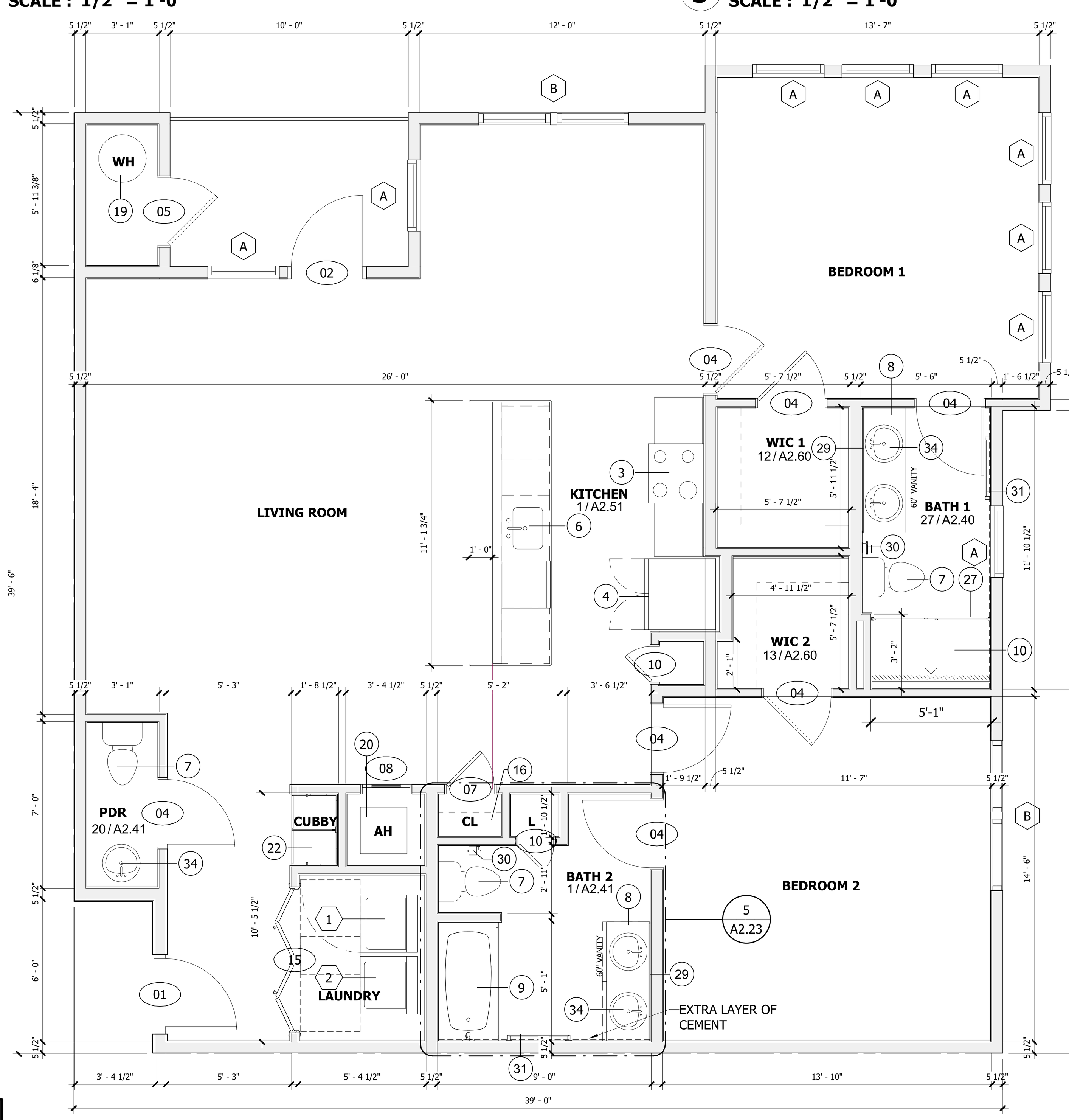


**1 UNIT - D2 - F1**
SCALE : 1/4" = 1'-0"

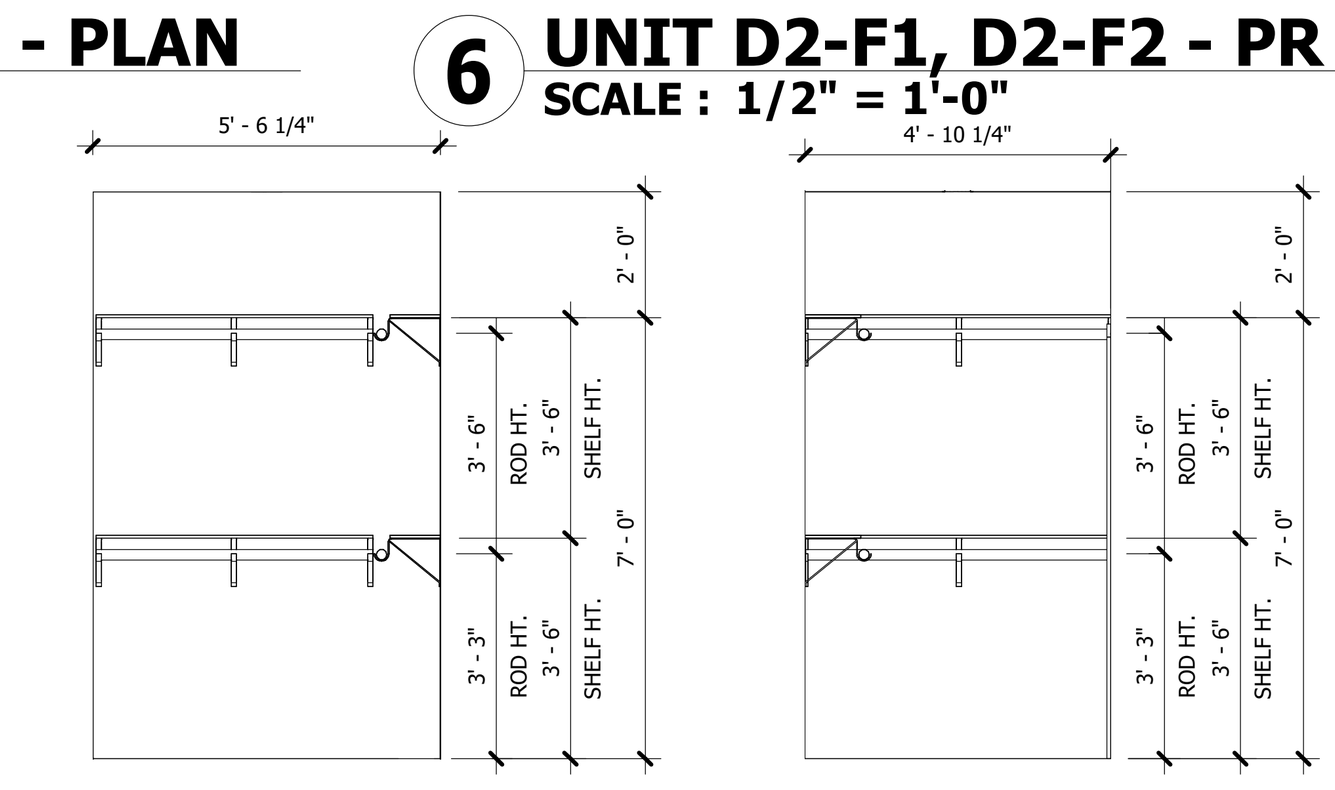


**17 UNIT D2-F1, D2-F2 - CLOSET 1 - 1 & 2**
SCALE : 1/4" = 1'-0"

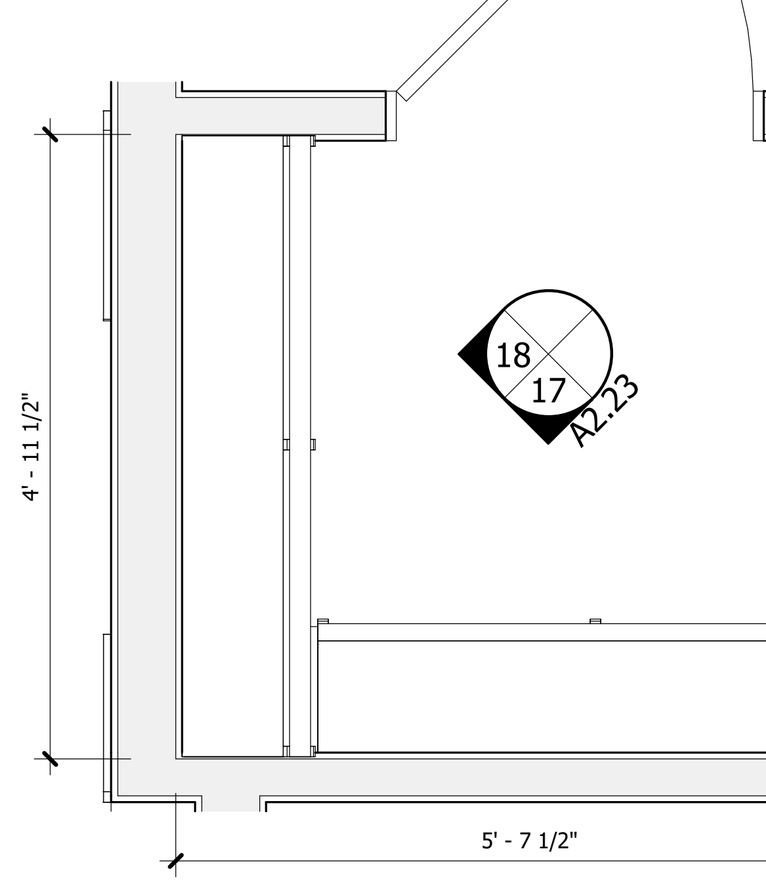

**15 UNIT D2-F1, D2-F2 - CLOSET 1 - PLAN**
SCALE : 1/2" = 1'-0"

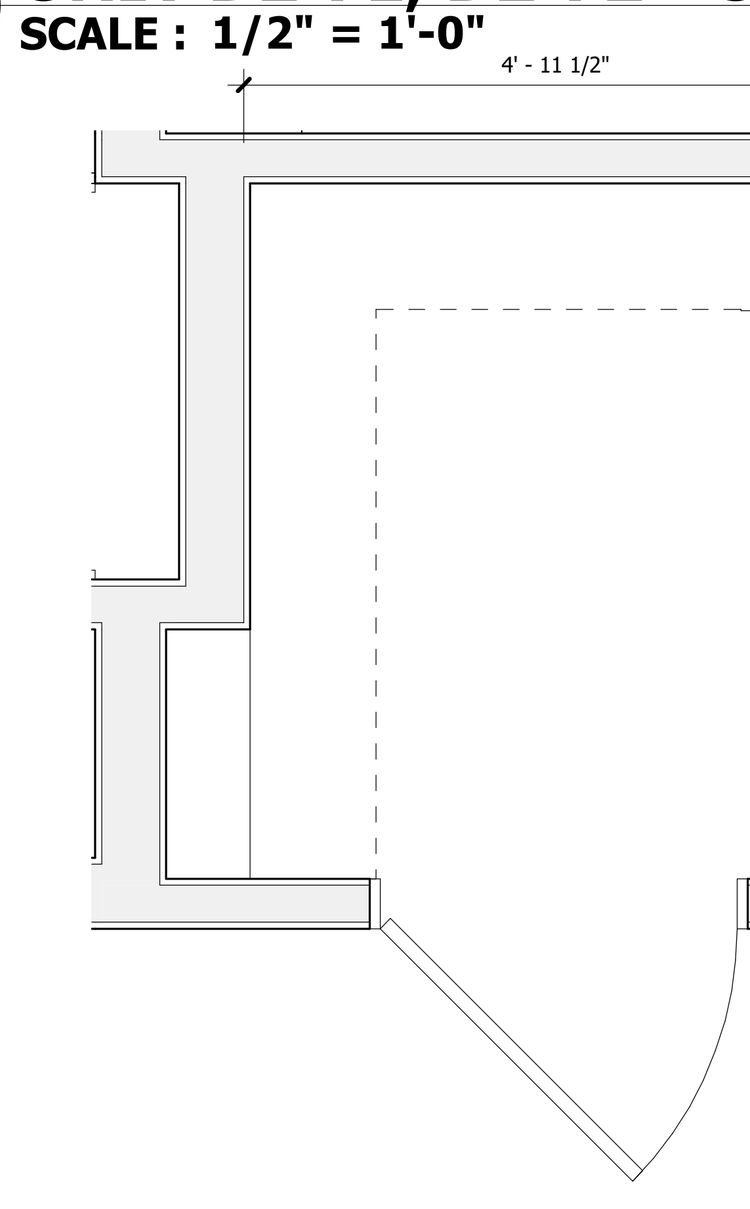

**16 UNIT D2-F1, D2-F2 - CLOSET 2 - PLAN**
SCALE : 1/2" = 1'-0"

ALL REPORTS, PLANS, SPECIFICATIONS AND COMPUTER FILES RELATING TO THIS PROJECT ARE THE PROPERTY OF THE MARTIN ARCHITECTURAL GROUP. THE MARTIN ARCHITECTURAL GROUP RETAINS ALL COMMON LAW, STATUTE AND OTHER RESERVED RIGHTS INCLUDING THE COPYRIGHT THERETO. REPRODUCTION OF THE MATERIAL HEREIN OR SUBSTANTIAL USE WITHOUT WRITTEN PERMISSION OF THE MARTIN ARCHITECTURAL GROUP VIOLATES THE COPYRIGHT LAWS OF THE UNITED STATES AND WILL BE SUBJECT TO LEGAL PROSECUTION.
©2022, The Martin Architectural Group, P.C.




Professi... I hereby prepare... duly lice... laws of ... Professi... License Expiratio... NIC

THE MARTIN ARCHITECTURAL GROUP, P.C.
ARCHITECTS AND LAND PLANNERS
A PROFESSIONAL CORPORATION
240 NORTH 22ND STREET, PHILADELPHIA, PA 19103
P (215) 665-1080 F (215) 561-5064

| | |
|---|---|
| P.A.: | DREW ROMANIC |
| P.M.: | JASON DECAMPLI |
| DRAWN BY: | Author |
| PROJECT NO: | 1362-12 |

| NO. | REVISION | DATE |
|---|---|---|
| 1 | PERMIT SET | 12/20/22 |

# UNIT PLANS (UNIT D2-F1, D2-F2)
**Granite Run Apartment 02**
MIDDLETOWN TOWNSHIP, PA

| | |
|---|---|
| SCALE: | |
| DATE: | 09/09/22 |

# A2.23

©2022, The Martin Architectural Group, P.C.

Printed: 1/13/2023 4:31:32 PM

## DOOR SCHEDULE - DWELLING UNIT

| MARK | DOOR TYPE | WIDTH | HEIGHT | DOOR MATERIAL | FRAME TYPE | FRAME MATERIAL | FIRE RATING | REMARKS |
|---|---|---|---|---|---|---|---|---|
| 01 | UA | 3'-0" | 7'-0" | MTL | F1 | MTL | 20 min. | UNIT ENTRY - SPRING HINGES |
| 02 | UE | 3'-0" | 7'-0" | VY | F1 | VY | | BALCONY DOOR |
| 03 | UB | 3'-0" | 6'-8" | MTE | F1 | WD | | |
| 04 | UB | 2'-10" | 6'-8" | MTE | F1 | WD | | |
| 05 | UA | 2'-10" | 6'-8" | EM | F1 | MTL | | UNIT EXT. MECH DOOR |
| 06 | UB | 2'-6" | 6'-8" | MTE | F1 | WD | | |
| 07 | UB | 2'-0" | 6'-8" | MTE | F1 | WD | | |
| 08 | UC | 2'-0" | 6'-8" | MTE | F1 | WD | | LOUVERED AIR HANDLER |
| 09 | UC | 1'-6" | 6'-8" | MTE | F1 | WD | | LOUVERED AIR HANDLER |
| 10 | UB | 1'-6" | 6'-8" | MTE | F1 | WD | | |
| 11 | UB | 1'-4" | 6'-8" | MTE | F1 | WD | | |
| 12 | UDD | 4'-0" | 6'-8" | MTE | | WD | | SLIDING BARN DOOR |
| 13 | UBB | 5'-0" | 6'-8" | MTE | F2 | WD | | DOUBLE SWING DOOR |
| 14 | UCC | 5'-0" | 6'-8" | MTE | F2 | WD | | LOUVERED BI-FOLD |
| 15 | UCC | 6'-0" | 6'-8" | MTE | F2 | WD | | LOUVERED BI-FOLD |
| 19 | UB | 1'-9" | 6'-8" | MTE | F1 | WD | | |
| E | | 3'-0" | 7'-0" | | | | | |
| EE | | 6'-0" | 7'-0" | | | | | |
| F | | 6'-0" | 7'-0" | | | | | *RATED GLASS |

## ROOM FINISH SCHEDULE

| SPACE | FLOOR | WALL | CEILING | HEIGHT | REMARKS |
|---|---|---|---|---|---|
| KITCHEN | 3 | A | 1 | 9'-0" | |
| LIVING RM. | 3 | A | 1 | 9'-0" | |
| BEDROOMS | 1 | A | 1 | 9'-0" | |
| DEN | 3 | A | 1 | 9'-0" | |
| BATHS | 4 | B/C | 2 | 9'-0" | |
| CLOSETS | | A | 1 | 9'-0" | FLOORING: MATCH ADJ. |
| LAUNDRY | 3 | A | 2 | 9'-0" | FLOORING: MATCH ADJ. |
| UNIT-HVAC | | A | 1 | 9'-0" | FL.: GYPCRETE PAINT-LIGHT GRAY |

### MATERIAL CODE

| FLR. / BASE | | WALL | | CEILING | |
|---|---|---|---|---|---|
| 1 | CPT / WD | A | G.W.B. | 1 | G.W.B. |
| 2 | | B | MR.G.W.B. | 2 | MR.G.W.B. |
| 3 | LVT / WD | C | CT-2 | 3 | |
| 4 | CT / CT | D | | 4 | |
| 5 | | E | | 5 | |
| 6 | | F | | 6 | |
| 7 | | G | | 7 | |
| 8 | | H | | 8 | |

MATERIAL GLOSSARY

| | |
|---|---|
| CPT | CARPET - SHAW GULF WINDS - COLOR: 532 MINERAL |
| CT-1 | CERAMIC TILE - 12X24 FLORIM MATERIA - COLOR: HONED 02 |
| CT-2 | CERAMIC TILE - 12X24 FLORIM MATERIA - COLOR: STONE CALACATTA |
| G.W.B. | GYPSUM WALL BOARD |
| MR.G.W.B. | MOISTURE RESISTANT G.W.B. |
| LVT | VINYL WOOD PLANK - SHAW TERRAIN 12 MIL - COLOR: 766 ECHO |
| WD. | WOOD |

## UNIT DOOR TYPES

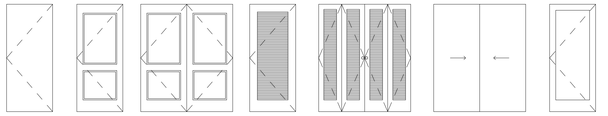


## FRAME TYPES

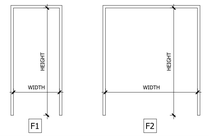


**DOOR/FRAME MATERIAL KEY:**

| | |
|---|---|
| AL | ALUMINUM |
| EM | EXTERIOR METAL |
| GL | GLASS |
| HC | HOLLOW CORE |
| HM | HOLLOW METAL |
| MTL | METAL |
| SC | SOLID CORE |
| SR | STILE & RAIL |
| VY | VINYL |
| WD | WOOD |
| MTE | MASONITE |

## WINDOW SCHEDULE

| MARK | WIDTH | HEIGHT | WINDOW TYPE | CONSTRUCTION TYPE | COMMENTS |
|---|---|---|---|---|---|
| A | 3'-0" | 6'-0" | SINGLE HUNG | VINYL | All windows to be provided with opening limiters. See specifications. |
| B | 6'-3 1/2" | 6'-0" | SINGLE HUNG | VINYL | All windows to be provided with opening limiters. See specifications. |

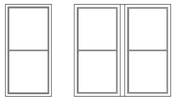


NOTE: (2) 2X6 FRT STUDS PROVIDED BETWEEN GROUP WINDOWS. (TYPICAL) PROVIDE 4" LIMITATION FOR WINDOW LIMITERS ON ALL WINDOWS

| ROOM FINISH MATERIAL CODE | |
|---|---|
| CPT | CARPET |
| CT | CERAMIC TILE |
| CONC | CONCRETE |
| GWB | GYPSUM WALL BOARD |
| MR GWB | MOISTURE RESISTANT GWB |
| V | SHEET VINYL |
| VWP | VINYL WOOD PLANK |
| VCT | VINYL COMPOSITE TILE |
| WD | WOOD |

## UNIT PLAN AND INTERIOR ELEVATION KEYNOTES

| Number | Description |
|---|---|
| 1 | WASHER |
| 2 | DRYER |
| 3 | RANGE / OVEN |
| 4 | REFRIGERATOR |
| 5 | DISHWASHER |
| 6 | KITCHEN SINK / FAUCET |
| 7 | TOILET |
| 8 | VANITY - SEE ELEVATION FOR SIZE |
| 9 | 30"X60" TUB |
| 10 | 36"X60" SHOWER BASE |
| 11 | 32"X60" SHOWER BASE |
| 12 | ACCESSIBLE THRESHOLD - MARBLE |
| 13 | ACCESSIBLE THRESHOLD - ALUMINIUM |
| 14 | SOFFIT OVER REFRIGERATOR AND BEHIND CABINET |
| 15 | LINEN SHELVES (5) PER SPECIFICATION |
| 16 | WIRE SHEVLING |
| 17 | KNEE WALL BELOW COUNTERTOP |
| 18 | BALCONY RAILING @ 42" HIGH |
| 19 | WALL MOUNTED HOT WATER HEATER |
| 20 | HVAC UNIT MOUNTED ON WALL |
| 21 | PRE ROCK BEHIND BATHING FIXTURES |
| 22 | CUBBIE CABINETS |
| 23 | MICROWAVE WITH RECIRCULATION HOOD |
| 24 | WALL TILE BETWEEN CONTERTOP AND WALL CABINET. SEE 1D DRAWING |
| 25 | BLOCKING FOR GRAB BAR. SEE FIG. 4- SHEET A0.06 |
| 26 | 24" HORIZONTAL GRAB BAR @ TUB BACK WALL. SEE FIG. 4 - SHEET A0.06 |
| 27 | SHOWER ROD |
| 28 | NOT USED |
| 29 | PAINTED FRAME MIRROR |
| 30 | TOILET TISSUE HOLDER @ 26" A.F.F. |
| 31 | 30" TOWEL BAR |
| 32 | ROBE HOOK |
| 33 | SHOWER HEAD |
| 34 | VANITY SINK BOWL |

**NOTES:**

1. SEE SPECIFICATIONS FOR ADDITIONAL INFORMATION.
2. ALL DOOR HARDWARE TO BE COMPLIANT WITH THE FEDERAL FAIR HOUSING ACT (FHA).
3. DOORS SHALL BE OPENABLE WITH NO MORE THAN ONE RELEASING OPERATION.
4. PROVIDE ACCESSIBLE THRESHOLDS AT ALL DOORS.
5. ALL UNITS ARE ADAPTABLE PER FHA. SEE SHEET A0.06 FOR ADDITIONAL INFORMATION.
6. ALL DIMENSIONS ARE TO ROUGH FRAMING U.N.O.
7. ALL WALLS ARE 2X4 STUDS UNLESS NOTED OTHERWISE.
8. ALL TENANT SEPERATIONS AND CORRIDOR WALLS ARE 2X6 UNLESS NOTED OTHERWISE.
9. PATIO AT FIRST FLOOR 4" BELOW UNIT FINISH FLOOR.
10. BALCONIES ARE FLUSH WITH GYPCRETE TOPPING. SEE DETAIL.
11. ALL TOILETS SET ON NEOPRENE GASKET WITH INSULATED PIPE TRAP.
12. ALL KITCHEN APPLIANCES TO HAVE STAINLESS STEEL FRONTS.
13. WHERE DRAWINGS ARE IN CONFLICT WITH OTHER DRAWINGS, CONTRACTOR SHALL NOTIFY THE ARCHITECT.
14. PROVIDE BLOCKING FOR GRAB BARS IN ALL BATHROOMS
15. DIMENSION TO STUD UNLESS OTHERWISE NOTED
16. DIMESNION TO FINISH @ CABINETS
17. PROVIDE BLOCKING FOR TV WALL MOUNT, CENTER AT 60" A.F.F.
18. ALL BATHROOM VANITES ARE 21" IN DEPTH

## LIGHT FIXTURE LEGEND

| | |
|---|---|
| U1 | LITHONIA FMSATL-16-20840-BN; SEMI FLUSH MOUNT |
| U2 | LITHONIA FMFL-30840-SATL-BN; LINEAR FLUSH MOUNT |
| U3 | LITHONIA DFMADRL-14-F01; FMPANL-14-20840M6; LED SURFACE MOUNT DRUM |
| U4 | SATCO COVER PLATE |
| U5 | PROGRESS P300187-009-30; LED BATH VANITY |
| U6 | LITHONIA FMMUSL-9-14840-WH; LED CLOSET MUSHROOM |
| U7 | LITHONIA MDPC-BNP-M6; DGDT 1003 M6 |
| U8 | COOPER SMD6R-12-930-WH; 1200 LUMEN SLIM SURFACE (120 VOLT ONLY) |
| U9 | NUVO 62-1161; 7" LED FLUSH MOUNT DISCK |
| U10 | LITHONIA OLWPLED-P1-40K-120-PE-BZ; LED MINI WALL PACK |

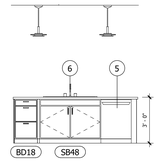


### 6 UNIT E - KITCHEN 2
SCALE : 1/4" = 1'-0"

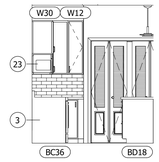


### 7 UNIT E - KITCHEN 3
SCALE : 1/4" = 1'-0"

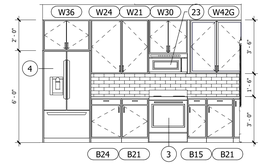


### 5 UNIT E - KITCHEN 1
SCALE : 1/4" = 1'-0"

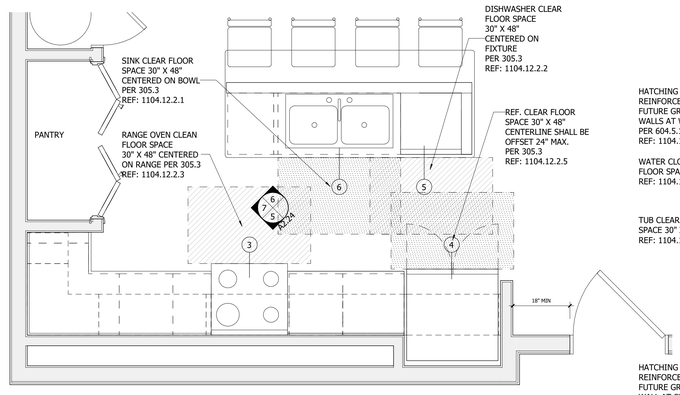


### 4 UNIT E - KITCHEN - PLAN
SCALE : 1/2" = 1'-0"

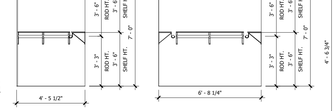


### 14 UNIT E - CLOSET 1 - ELEV 1 & 2
SCALE : 1/4" = 1'-0"

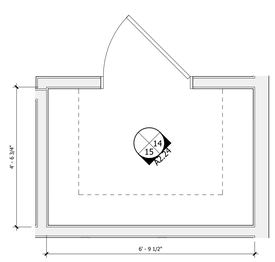


### 12 UNIT E - CLOSET 1 - PLAN
SCALE : 1/2" = 1'-0"

### 13 UNIT E - CLOSET 2 - PLAN
SCALE : 1/2" = 1'-0"

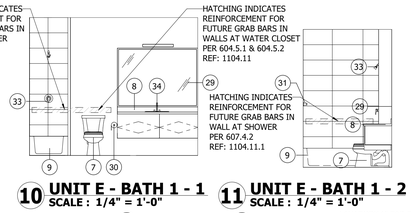


### 10 UNIT E - BATH 1 - 1
SCALE : 1/4" = 1'-0"

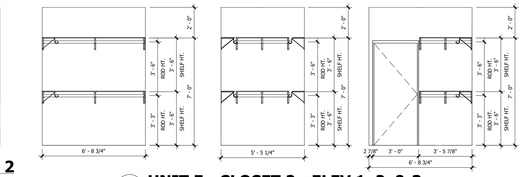


### 11 UNIT E - BATH 1 - 2
SCALE : 1/4" = 1'-0"

### 16 UNIT E - CLOSET 2 - ELEV 1, 2, & 3
SCALE : 1/4" = 1'-0"

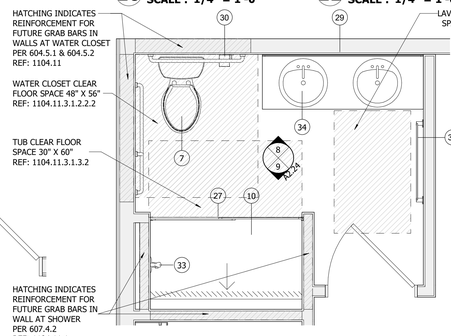


### 3 UNIT E - BATHROOM 2 - PLAN
SCALE : 1/2" = 1'-0"

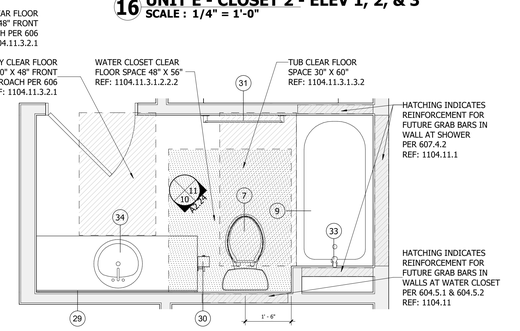


### 2 UNIT E - BATHROOM 1 - PLAN
SCALE : 1/2" = 1'-0"

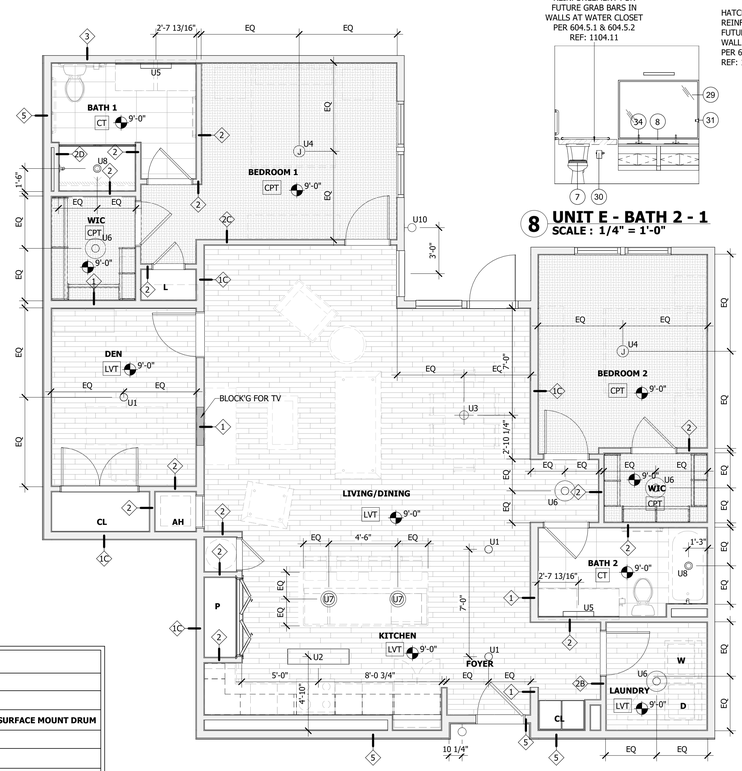


### 8 UNIT E - BATH 2 - 1
SCALE : 1/4" = 1'-0"




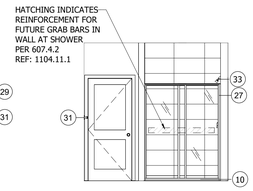


### 9 UNIT E - BATH 2 - 2
SCALE : 1/4" = 1'-0"

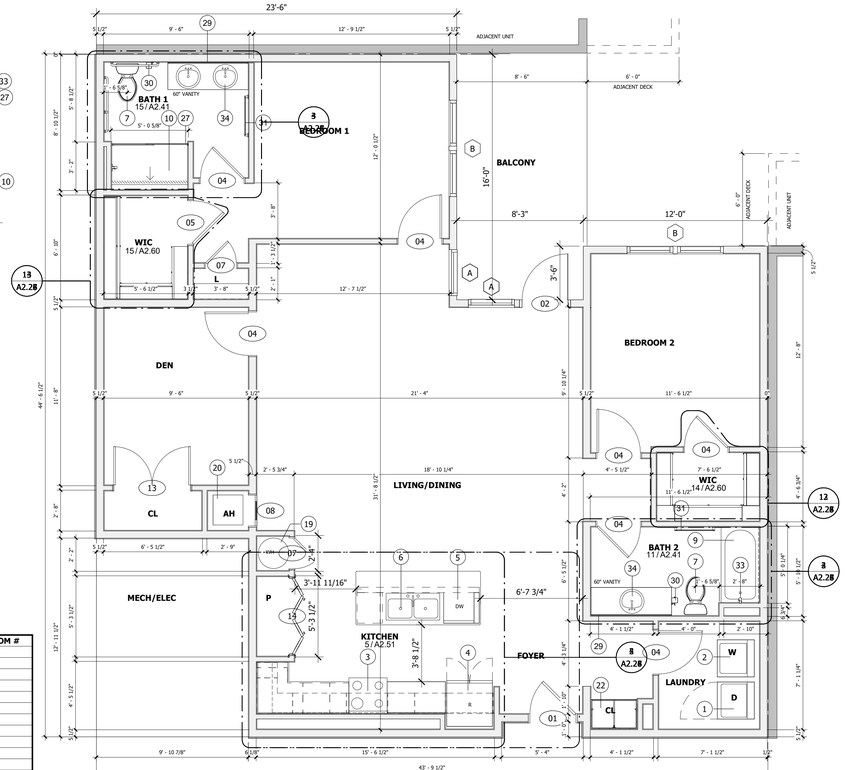


### 1 UNIT - E
SCALE : 1/4" = 1'-0"

| ROOM # |
|---|
| UNIT E |
| 124 |
| 141 |
| 224 |
| 233 |
| 241 |
| 324 |
| 333 |
| 341 |
| 424 |
| 433 |
| 441 |
| Grand total: 11 |

### 1A UNIT E RCP
SCALE : 1/4" = 1'-0"


ALL REPORTS, PLANS, SPECIFICATIONS AND COMPUTER FILES RELATING TO THIS PROJECT ARE THE PROPERTY OF THE MARTIN ARCHITECTURAL GROUP. THE MARTIN ARCHITECTURAL GROUP RETAINS ALL COMMON LAW, STATUTE AND OTHER RESERVED RIGHTS INCLUDING THE COPY-RIGHT THERETO. REPRODUCTION OF THE MATERIAL HEREIN OR SUBSTANTIAL USE WITHOUT WRITTEN PERMISSION OF THE MARTIN ARCHITECTURAL GROUP VIOLATES THE COPYRIGHT LAWS OF THE UNITED STATES AND WILL BE SUBJECT TO LEGAL PROSECUTION.
©2022, The Martin Architectural Group, P.C.


NIC

Professi I hereby prepare to the laws of

Professi License Expirati


THE MARTIN ARCHITECTURAL GROUP, P.C.
ARCHITECTS AND LAND PLANNERS
A PROFESSIONAL CORPORATION
240 NORTH 22ND STREET, PHILADELPHIA, PA, 19103
P (215) 665-1080 F (215) 561-5064


| | |
|---|---|
| P.A.: | DREW ROMANIC |
| P.M.: | JASON DECAMPLI |
| DRAWN BY: | Author |
| PROJECT NO: | 1362-12 |

| NO. | REVISION | DATE |
|---|---|---|
| 1 | PERMIT SET | 12/20/22 |

UNIT PLAN (UNIT E)
**Granite Run Apartment 02**
MIDDLETOWN TOWNSHIP, PA

SCALE:
DATE: 09/09/22

**A2.24**

©2022, The Martin Architectural Group, P.C.

Printed: 1/13/2023 4:31:48 PM

## DOOR SCHEDULE - DWELLING UNIT

| MARK | DOOR TYPE | WIDTH | HEIGHT | DOOR MATERIAL | FRAME TYPE | FRAME MATERIAL | FIRE RATING | REMARKS |
|---|---|---|---|---|---|---|---|---|
| 01 | UA | 3'-0" | 7'-0" | MTL | F1 | MTL | 20 min. | UNIT ENTRY - SPRING HINGES |
| 02 | UE | 3'-0" | 7'-0" | VY | F1 | VY | | BALCONY DOOR |
| 03 | UB | 3'-0" | 6'-8" | MTE | F1 | WD | | |
| 04 | UB | 2'-10" | 6'-8" | MTE | F1 | WD | | |
| 05 | UA | 2'-10" | 6'-8" | EM | F1 | MTL | | UNIT EXT. MECH DOOR |
| 06 | UB | 2'-6" | 6'-8" | MTE | F1 | WD | | |
| 07 | UB | 2'-0" | 6'-8" | MTE | F1 | WD | | |
| 08 | UC | 2'-0" | 6'-8" | MTE | F1 | WD | | LOUVERED AIR HANDLER |
| 09 | UC | 1'-6" | 6'-8" | MTE | F1 | WD | | LOUVERED AIR HANDLER |
| 10 | UB | 1'-6" | 6'-8" | MTE | F1 | WD | | |
| 11 | UB | 1'-4" | 6'-8" | MTE | F1 | WD | | |
| 12 | UDD | 4'-0" | 6'-8" | MTE | | WD | | SLIDING BARN DOOR |
| 13 | UBB | 5'-0" | 6'-8" | MTE | F2 | WD | | DOUBLE SWING DOOR |
| 14 | UCC | 5'-0" | 6'-8" | MTE | F2 | WD | | LOUVERED BI-FOLD |
| 15 | UCC | 6'-0" | 6'-8" | MTE | F2 | WD | | LOUVERED BI-FOLD |
| 19 | UB | 1'-9" | 6'-8" | MTE | F1 | WD | | |
| E | | 3'-0" | 7'-0" | | | | | |
| EE | | 6'-0" | 7'-0" | | | | | |
| F | | 6'-0" | 7'-0" | | | | | *RATED GLASS |

## ROOM FINISH SCHEDULE

| SPACE | FLOOR | WALL | CEILING | HEIGHT | REMARKS |
|---|---|---|---|---|---|
| KITCHEN | 3 | A | 1 | 9'-0" | |
| LIVING RM. | 3 | A | 1 | 9'-0" | |
| BEDROOMS | 1 | A | 1 | 9'-0" | |
| DEN | 3 | A | 1 | 9'-0" | |
| BATHS | 4 | B/C | 2 | 9'-0" | |
| CLOSETS | | A | 1 | 9'-0" | FLOORING: MATCH ADJ. |
| LAUNDRY | 3 | A | 2 | 9'-0" | FLOORING: MATCH ADJ. |
| UNIT-HVAC | | A | 1 | 9'-0" | FL. - GYPCRETE. PAINT-LIGHT GRAY |

### MATERIAL CODE

| FLR. / BASE | | WALL | | CEILING | |
|---|---|---|---|---|---|
| 1 | CPT / WD | A | G.W.B. | 1 | G.W.B. |
| 2 | | B | MR.G.W.B. | 2 | MR.G.W.B. |
| 3 | LVT / WD | C | CT-2 | 3 | |
| 4 | CT / CT | D | | 4 | |
| 5 | | E | | 5 | |
| 6 | | F | | 6 | |
| 7 | | G | | 7 | |
| 8 | | H | | 8 | |

MATERIAL GLOSSARY

| | |
|---|---|
| CPT | CARPET - SHAW GULF WINDS - COLOR: 532 MINERAL |
| CT-1 | CERAMIC TILE - 12X24 FLORIM MATERIA - COLOR: HONED 02 |
| CT-2 | CERAMIC TILE - 12X24 FLORIM MATERIA - COLOR: STONE CALACATTA |
| G.W.B. | GYPSUM WALL BOARD |
| MR.G.W.B. | MOISTURE RESISTANT G.W.B. |
| LVT | VINYL WOOD PLANK - SHAW TERRAIN 12 MIL - COLOR: 766 ECHO |
| WD. | WOOD |

## UNIT DOOR TYPES

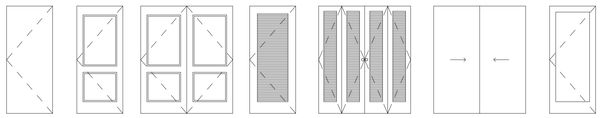


## FRAME TYPES

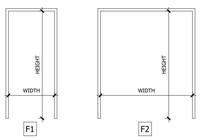


**DOOR/FRAME MATERIAL KEY:**

| | |
|---|---|
| AL | ALUMINUM |
| EM | EXTERIOR METAL |
| GL | GLASS |
| HC | HOLLOW CORE |
| HM | HOLLOW METAL |
| MTL | METAL |
| SC | SOLID CORE |
| SR | STILE & RAIL |
| VY | VINYL |
| WD | WOOD |
| MTE | MASONITE |

## WINDOW SCHEDULE

| MARK | WIDTH | HEIGHT | WINDOW TYPE | CONSTRUCTION TYPE | COMMENTS |
|---|---|---|---|---|---|
| A | 3'-0" | 6'-0" | SINGLE HUNG | VINYL | All windows to be provided with opening limiters. See specifications. |
| B | 6'-3 1/2" | 6'-0" | SINGLE HUNG | VINYL | All windows to be provided with opening limiters. See specifications. |

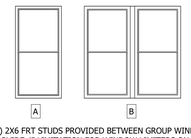


NOTE: (2) 2X6 FRT STUDS PROVIDED BETWEEN GROUP WINDOWS. (TYPICAL) PROVIDE 4" LIMITATION FOR WINDOW LIMITERS ON ALL WINDOWS

| ROOM FINISH MATERIAL CODE | |
|---|---|
| CPT | CARPET |
| CT | CERAMIC TILE |
| CONC | CONCRETE |
| GWB | GYPSUM WALL BOARD |
| MR GWB | MOISTURE RESISTANT GWB |
| V | SHEET VINYL |
| VWP | VINYL WOOD PLANK |
| VCT | VINYL COMPOSITE TILE |
| WD | WOOD |

## UNIT PLAN AND INTERIOR ELEVATION KEYNOTES

| Number | Description |
|---|---|
| 1 | WASHER |
| 2 | DRYER |
| 3 | RANGE / OVEN |
| 4 | REFRIGERATOR |
| 5 | DISHWASHER |
| 6 | KITCHEN SINK / FAUCET |
| 7 | TOILET |
| 8 | VANITY - SEE ELEVATION FOR SIZE |
| 9 | 30"X60" TUB |
| 10 | 36"X60" SHOWER BASE |
| 11 | 32"X60" SHOWER BASE |
| 12 | ACCESSIBLE THRESHOLD - MARBLE |
| 13 | ACCESSIBLE THRESHOLD - ALUMINIUM |
| 14 | SOFFIT OVER REFRIGERATOR AND BEHIND CABINET |
| 15 | LINEN SHELVES (5) PER SPECIFICATION |
| 16 | WIRE SHEVLING |
| 17 | KNEE WALL BELOW COUNTERTOP |
| 18 | BALCONY RAILING @ 42" HIGH |
| 19 | WALL MOUNTED HOT WATER HEATER |
| 20 | HVAC UNIT MOUNTED ON WALL |
| 21 | PRE ROCK BEHIND BATHING FIXTURES |
| 22 | CUBBIE CABINETS |
| 23 | MICROWAVE WITH RECIRCULATION HOOD |
| 24 | WALL TILE BETWEEN CONTERTOP AND WALL CABINET. SEE 1D DRAWING |
| 25 | BLOCKING FOR GRAB BAR. SEE FIG. 4- SHEET A0.06 |
| 26 | 24" HORIZONTAL GRAB BAR @ TUB BACK WALL. SEE FIG. 4 - SHEET A0.06 |
| 27 | SHOWER ROD |
| 28 | NOT USED |
| 29 | PAINTED FRAME MIRROR |
| 30 | TOILET TISSUE HOLDER @ 26" A.F.F. |
| 31 | 30" TOWEL BAR |
| 32 | ROBE HOOK |
| 33 | SHOWER HEAD |
| 34 | VANITY SINK BOWL |

**NOTES:**

1. SEE SPECIFICATIONS FOR ADDITIONAL INFORMATION.
2. ALL DOOR HARDWARE TO BE COMPLIANT WITH THE FEDERAL FAIR HOUSING ACT (FHA).
3. DOORS SHALL BE OPENABLE WITH NO MORE THAN ONE RELEASING OPERATION.
4. PROVIDE ACCESSIBLE THRESHOLDS AT ALL DOORS.
5. ALL UNITS ARE ADAPTABLE PER FHA. SEE SHEET A0.06 FOR ADDITIONAL INFORMATION.
6. ALL DIMENSIONS ARE TO ROUGH FRAMING U.N.O.
7. ALL WALLS ARE 2X4 STUDS UNLESS NOTED OTHERWISE.
8. ALL TENANT SEPERATIONS AND CORRIDOR WALLS ARE 2X6 UNLESS NOTED OTHERWISE.
9. PATIO AT FIRST FLOOR 4" BELOW UNIT FINISH FLOOR.
10. BALCONIES ARE FLUSH WITH GYPCRETE TOPPING. SEE DETAIL.
11. ALL TOILETS SET ON NEOPRENE GASKET WITH INSULATED PIPE TRAP.
12. ALL KITCHEN APPLIANCES TO HAVE STAINLESS STEEL FRONTS.
13. WHERE DRAWINGS ARE IN CONFLICT WITH OTHER DRAWINGS, CONTRACTOR SHALL NOTIFY THE ARCHITECT.
14. PROVIDE BLOCKING FOR GRAB BARS IN ALL BATHROOMS
15. DIMENSION TO STUD UNLESS OTHERWISE NOTED
16. DIMESNION TO FINISH @ CABINETS
17. PROVIDE BLOCKING FOR TV WALL MOUNT, CENTER AT 60" A.F.F.
18. ALL BATHROOM VANITES ARE 21" IN DEPTH

## LIGHT FIXTURE LEGEND

| | |
|---|---|
| U1 | LITHONIA FMSATL-16-20840-BN; SEMI FLUSH MOUNT |
| U2 | LITHONIA FMFL-30840-SATL-BN; LINEAR FLUSH MOUNT |
| U3 | LITHONIA DFMADRL-14-F01; FMPANL-14-20840M6; LED SURFACE MOUNT DRUM |
| U4 | SATCO COVER PLATE |
| U5 | PROGRESS P300187-009-30; LED BATH VANITY |
| U6 | LITHONIA FMMUSL-9-14840-WH; LED CLOSET MUSHROOM |
| U7 | LITHONIA MDPC-BNP-M6; DGDT 1003 M6 |
| U8 | COOPER SMD6R-12-930-WH; 1200 LUMEN SLIM SURFACE (120 VOLT ONLY) |
| U9 | NUVO 62-1161; 7" LED FLUSH MOUNT DISCK |
| U10 | LITHONIA OLWPLED-P1-40K-120-PE-BZ; LED MINI WALL PACK |

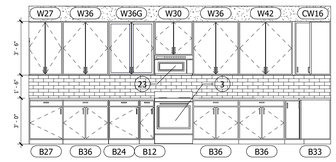


### 9 UNIT E(FW1) KITCHEN - 1
SCALE : 1/4" = 1'-0"

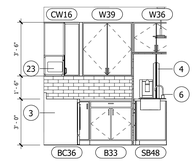


### 10 UNIT E(FW1) KITCHEN - 2
SCALE : 1/4" = 1'-0"

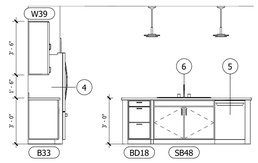


### 11 UNIT E(FW1) KITCHEN - 3
SCALE : 1/4" = 1'-0"

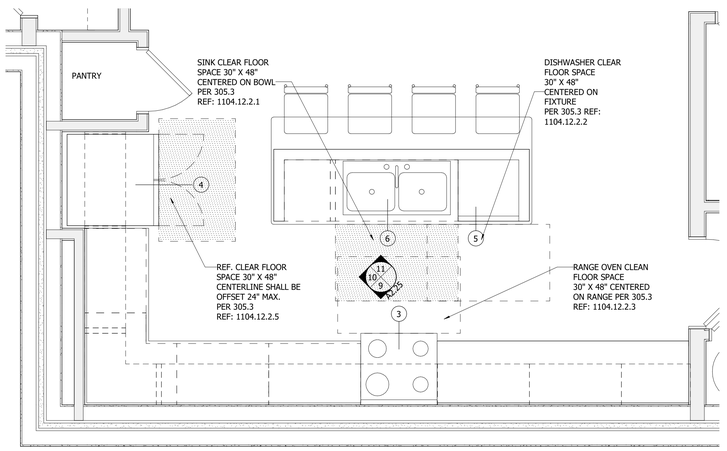


### 4 UNIT E(FW-1) - KITCHEN - PLAN
SCALE : 1/2" = 1'-0"

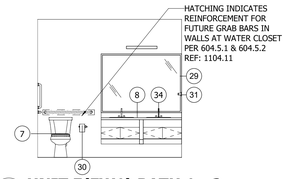


### 5 UNIT E(FW1) BATH 1 - 2
SCALE : 1/4" = 1'-0"

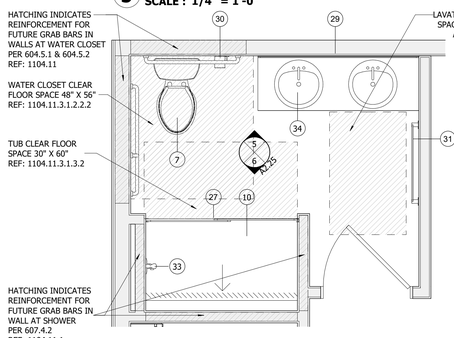


### 14 UNIT E(FW1) - CLOSET 1 - ELEV 1 & 2
SCALE : 1/4" = 1'-0"

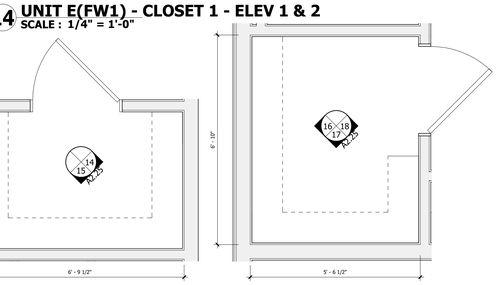


### 8 UNIT E(FW1) BATH 2 - 1
SCALE : 1/4" = 1'-0"

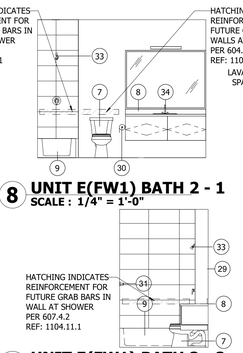


### 7 UNIT E(FW1) BATH 2 - 2
SCALE : 1/4" = 1'-0"

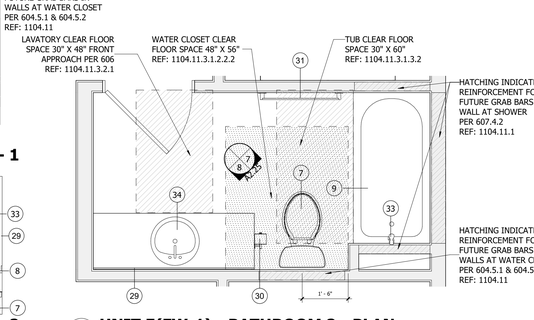


### 2 UNIT E(FW-1) - BATHROOM 2 - PLAN
SCALE : 1/2" = 1'-0"

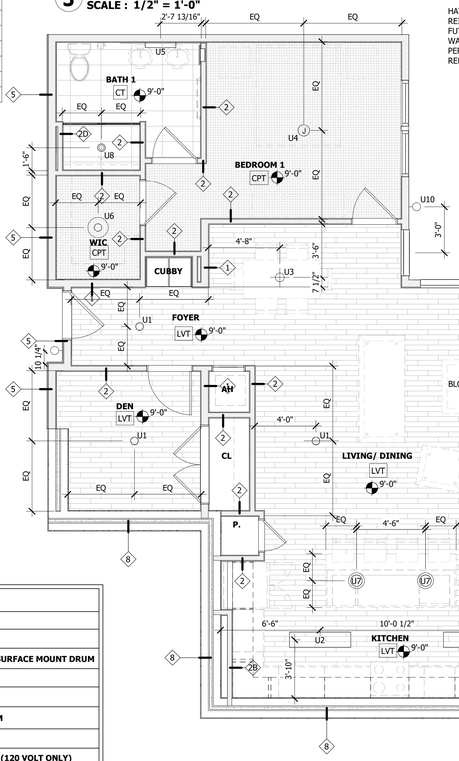


### 3 UNIT E(FW-1) - BATHROOM 1 - PLAN
SCALE : 1/2" = 1'-0"

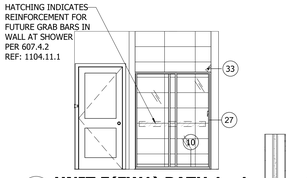


### 12 UNIT E(FW1) - CLOSET 1 - PLAN
SCALE : 1/2" = 1'-0"

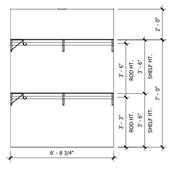


### 13 UNIT E(FW1) - CLOSET 2 - PLAN
SCALE : 1/2" = 1'-0"

### 6 UNIT E(FW1) BATH 1 - 1
SCALE : 1/4" = 1'-0"

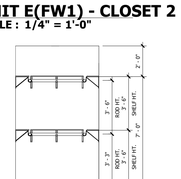


### 16 UNIT E(FW1) - CLOSET 2 - 1
SCALE : 1/4" = 1'-0"

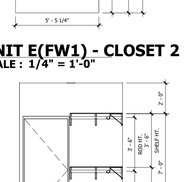


### 17 UNIT E(FW1) - CLOSET 2 - 2
SCALE : 1/4" = 1'-0"

### 18 UNIT E(FW1) - CLOSET 2 - 3
SCALE : 1/4" = 1'-0"

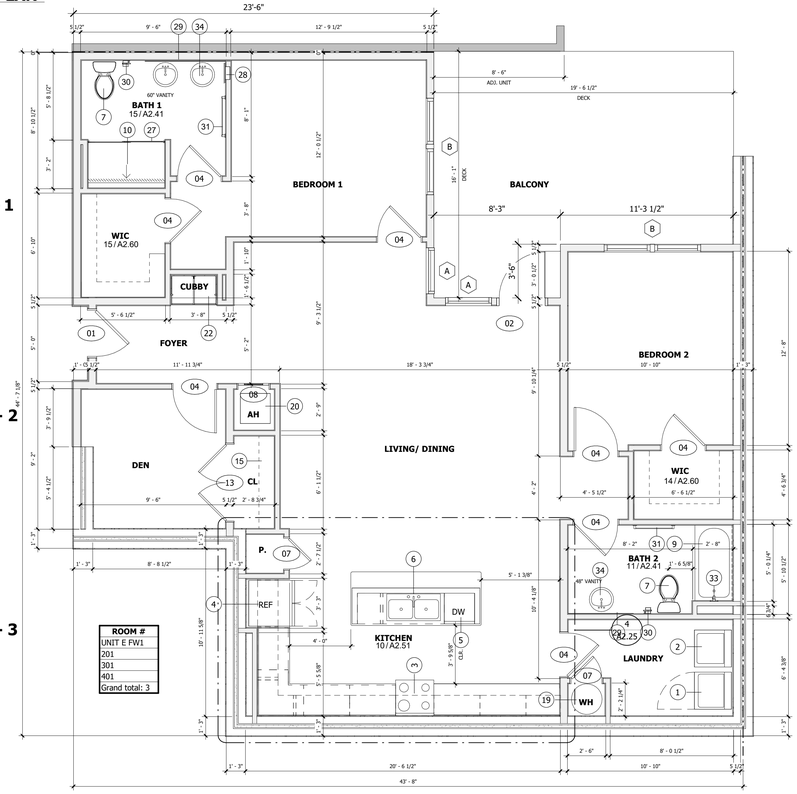


### 1 UNIT - E (FW-1)
SCALE : 1/4" = 1'-0"

### 1A UNIT E-FW1 RCP
SCALE : 1/4" = 1'-0"


ALL REPORTS, PLANS, SPECIFICATIONS AND COMPUTER FILES RELATING TO THIS PROJECT ARE THE PROPERTY OF THE MARTIN ARCHITECTURAL GROUP. THE MARTIN ARCHITECTURAL GROUP RETAINS ALL COMMON LAW, STATUTE AND OTHER RESERVED RIGHTS INCLUDING THE COPYRIGHT THERETO. REPRODUCTION OF THE MATERIAL HEREIN OR SUBSTANTIAL USE WITHOUT WRITTEN PERMISSION OF THE MARTIN ARCHITECTURAL GROUP VIOLATES THE COPYRIGHT LAWS OF THE UNITED STATES AND WILL BE SUBJECT TO LEGAL PROSECUTION.
©2022, The Martin Architectural Group, P.C.


NIC

COMMONWEALTH OF PENNSYLVANIA REGISTERED ARCHITECT DREW ROMANIC No. RA409015

I hereby certify that I prepare this plan in accordance with the applicable laws of the Commonwealth of Pennsylvania governing the practice of Professional Architecture.


THE MARTIN ARCHITECTURAL GROUP, P.C.
ARCHITECTS AND LAND PLANNERS
A PROFESSIONAL CORPORATION
240 NORTH 22ND STREET, PHILADELPHIA, PA, 19103
P (215) 665-1600 F (215) 561-5064


| | |
|---|---|
| P.A.: | DREW ROMANIC |
| P.M.: | JASON DECAMPLI |
| DRAWN BY: | Author |
| PROJECT NO: | 1362-12 |

| NO. | REVISION | DATE |
|---|---|---|
| 1 | PERMIT SET | 12/20/22 |

# UNIT PLANS (UNIT E-FW1)
## Granite Run Apartment 02
MIDDLETOWN TOWNSHIP, PA

SCALE:
DATE: 09/15/22

# A2.25

©2022, The Martin Architectural Group, P.C.

Printed: 1/13/2023 4:32:03 PM

## UNIT PLAN AND INTERIOR ELEVATION KEYNOTES

| Number | Description |
|---|---|
| 1 | WASHER |
| 2 | DRYER |
| 3 | RANGE / OVEN |
| 4 | REFRIGERATOR |
| 5 | DISHWASHER |
| 6 | KITCHEN SINK / FAUCET |
| 7 | TOILET |
| 8 | VANITY - SEE ELEVATION FOR SIZE |
| 9 | 30"X60" TUB |
| 10 | 36"X60" SHOWER BASE |
| 11 | 32"X60" SHOWER BASE |
| 12 | ACCESSIBLE THRESHOLD - MARBLE |
| 13 | ACCESSIBLE THRESHOLD - ALUMINIUM |
| 14 | SOFFIT OVER REFRIGERATOR AND BEHIND CABINET |
| 15 | LINEN SHELVES (5) PER SPECIFICATION |
| 16 | WIRE SHEVLING |
| 17 | KNEE WALL BELOW COUNTERTOP |
| 18 | BALCONY RAILING @ 42" HIGH |
| 19 | WALL MOUNTED HOT WATER HEATER |
| 20 | HVAC UNIT MOUNTED ON WALL |
| 21 | PRE ROCK BEHIND BATHING FIXTURES |
| 22 | CUBBIE CABINETS |
| 23 | MICROWAVE WITH RECIRCULATION HOOD |
| 24 | WALL TILE BETWEEN CONTERTOP AND WALL CABINET. SEE 1D DRAWING |
| 25 | BLOCKING FOR GRAB BAR. SEE FIG. 4- SHEET A0.06 |
| 26 | 24" HORIZONTAL GRAB BAR @ TUB BACK WALL. SEE FIG. 4 - SHEET A0.06 |
| 27 | SHOWER ROD |
| 28 | NOT USED |
| 29 | PAINTED FRAME MIRROR |
| 30 | TOILET TISSUE HOLDER @ 26" A.F.F. |
| 31 | 30" TOWEL BAR |
| 32 | ROBE HOOK |
| 33 | SHOWER HEAD |
| 34 | VANITY SINK BOWL |

**NOTES:**

1. SEE SPECIFICATIONS FOR ADDITIONAL INFORMATION.
2. ALL DOOR HARDWARE TO BE COMPLIANT WITH THE FEDERAL FAIR HOUSING ACT (FHA).
3. DOORS SHALL BE OPENABLE WITH NO MORE THAN ONE RELEASING OPERATION.
4. PROVIDE ACCESSIBLE THRESHOLDS AT ALL DOORS.
5. ALL UNITS ARE ADAPTABLE PER FHA. SEE SHEET A0.06 FOR ADDITIONAL INFORMATION.
6. ALL DIMENSIONS ARE TO ROUGH FRAMING U.N.O.
7. ALL WALLS ARE 2X4 STUDS UNLESS NOTED OTHERWISE.
8. ALL TENANT SEPERATIONS AND CORRIDOR WALLS ARE 2X6 UNLESS NOTED OTHERWISE.
9. PATIO AT FIRST FLOOR 4" BELOW UNIT FINISH FLOOR.
10. BALCONIES ARE FLUSH WITH GYPCRETE TOPPING. SEE DETAIL.
11. ALL TOILETS SET ON NEOPRENE GASKET WITH INSULATED PIPE TRAP.
12. ALL KITCHEN APPLIANCES TO HAVE STAINLESS STEEL FRONTS.
13. WHERE DRAWINGS ARE IN CONFLICT WITH OTHER DRAWINGS, CONTRACTOR SHALL NOTIFY THE ARCHITECT.
14. PROVIDE BLOCKING FOR GRAB BARS IN ALL BATHROOMS
15. DIMENSION TO STUD UNLESS OTHERWISE NOTED
16. DIMESNION TO FINISH @ CABINETS
17. PROVIDE BLOCKING FOR TV WALL MOUNT, CENTER AT 60" A.F.F.
18. ALL BATHROOM VANITES ARE 21" IN DEPTH

| ROOM FINISH MATERIAL CODE | |
|---|---|
| CPT | CARPET |
| CT | CERAMIC TILE |
| CONC | CONCRETE |
| GWB | GYPSUM WALL BOARD |
| MR GWB | MOISTURE RESISTANT GWB |
| V | SHEET VINYL |
| VWP | VINYL WOOD PLANK |
| VCT | VINYL COMPOSITE TILE |
| WD | WOOD |

## ROOM FINISH SCHEDULE

| SPACE | FLOOR | WALL | CEILING | HEIGHT | REMARKS |
|---|---|---|---|---|---|
| KITCHEN | 3 | A | 1 | 9'-0" | |
| LIVING RM. | 3 | A | 1 | 9'-0" | |
| BEDROOMS | 1 | A | 1 | 9'-0" | |
| DEN | 3 | A | 1 | 9'-0" | |
| BATHS | 4 | B/C | 2 | 9'-0" | |
| CLOSETS | | A | 1 | 9'-0" | FLOORING: MATCH ADJ. |
| LAUNDRY | 3 | A | 2 | 9'-0" | FLOORING: MATCH ADJ. |
| UNIT-HVAC | | A | 1 | 9'-0" | FL.: GYPCRETE PAINT-LIGHT GRAY |

## MATERIAL CODE

| FLR. / BASE | | WALL | | CEILING | |
|---|---|---|---|---|---|
| 1 | CPT / WD | A | G.W.B. | 1 | G.W.B. |
| 2 | | B | MR.G.W.B. | 2 | MR.G.W.B. |
| 3 | LVT / WD | C | CT-2 | 3 | |
| 4 | CT / CT | D | | 4 | |
| 5 | | E | | 5 | |
| 6 | | F | | 6 | |
| 7 | | G | | 7 | |
| 8 | | H | | 8 | |

MATERIAL GLOSSARY

| | |
|---|---|
| CPT | CARPET - SHAW GULF WINDS - COLOR: 532 MINERAL |
| CT-1 | CERAMIC TILE - 12X24 FLORIM MATERIA - COLOR: HONED 02 |
| CT-2 | CERAMIC TILE - 12X24 FLORIM MATERIA - COLOR: STONE CALACATTA |
| G.W.B. | GYPSUM WALL BOARD |
| MR.G.W.B. | MOISTURE RESISTANT G.W.B. |
| LVT | VINYL WOOD PLANK - SHAW TERRAIN 12 MIL - COLOR: 766 ECHO |
| WD. | WOOD |

## FRAME TYPES

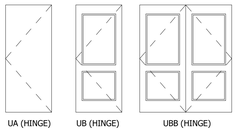


**DOOR/FRAME MATERIAL KEY:**

| | |
|---|---|
| AL | ALUMINUM |
| EM | EXTERIOR METAL |
| GL | GLASS |
| HC | HOLLOW CORE |
| HM | HOLLOW METAL |
| MTL | METAL |
| SC | SOLID CORE |
| SR | STILE & RAIL |
| VY | VINYL |
| WD | WOOD |
| MTE | MASONITE |

## WINDOW SCHEDULE

| MARK | WIDTH | HEIGHT | WINDOW TYPE | CONSTRUCTION TYPE | COMMENTS |
|---|---|---|---|---|---|
| A | 3'-0" | 6'-0" | SINGLE HUNG | VINYL | All windows to be provided with opening limiters. See specifications. |
| B | 6'-3 1/2" | 6'-0" | SINGLE HUNG | VINYL | All windows to be provided with opening limiters. See specifications. |

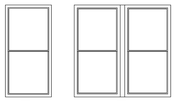


NOTE: (2) 2X6 FRT STUDS PROVIDED BETWEEN GROUP WINDOWS. (TYPICAL) PROVIDE 4" LIMITATION FOR WINDOW LIMITERS ON ALL WINDOWS

## LIGHT FIXTURE LEGEND

| | |
|---|---|
| U1 | LITHONIA FMSATL-16-20840-BN; SEMI FLUSH MOUNT |
| U2 | LITHONIA FMFL-30840-SATL-BN; LINEAR FLUSH MOUNT |
| U3 | LITHONIA DFMADRL-14-F01; FMPANL-14-20840M6; LED SURFACE MOUNT DRUM |
| U4 | SATCO COVER PLATE |
| U5 | PROGRESS P300187-009-30; LED BATH VANITY |
| U6 | LITHONIA FMMUSL-9-14840-WH; LED CLOSET MUSHROOM |
| U7 | LITHONIA MDPC-BNP-M6; DGDT 1003 M6 |
| U8 | COOPER SMD6R-12-930-WH; 1200 LUMEN SLIM SURFACE (120 VOLT ONLY) |
| U9 | NUVO 62-1161; 7" LED FLUSH MOUNT DISCK |
| U10 | LITHONIA OLWPLED-P1-40K-120-PE-BZ; LED MINI WALL PACK |

## DOOR SCHEDULE - DWELLING UNIT

| MARK | DOOR TYPE | WIDTH | HEIGHT | DOOR MATERIAL | FRAME TYPE | FRAME MATERIAL | FIRE RATING | REMARKS |
|---|---|---|---|---|---|---|---|---|
| 01 | UA | 3'-0" | 7'-0" | MTL | F1 | MTL | 20 min. | UNIT ENTRY - SPRING HINGES |
| 02 | UE | 3'-0" | 7'-0" | VY | F1 | VY | | BALCONY DOOR |
| 03 | UB | 3'-0" | 6'-8" | MTE | F1 | WD | | |
| 04 | UB | 2'-10" | 6'-8" | MTE | F1 | WD | | |
| 05 | UA | 2'-10" | 6'-8" | EM | F1 | MTL | | UNIT EXT. MECH DOOR |
| 06 | UB | 2'-6" | 6'-8" | MTE | F1 | WD | | |
| 07 | UB | 2'-0" | 6'-8" | MTE | F1 | WD | | |
| 08 | UC | 2'-0" | 6'-8" | MTE | F1 | WD | | LOUVERED AIR HANDLER |
| 09 | UC | 1'-6" | 6'-8" | MTE | F1 | WD | | LOUVERED AIR HANDLER |
| 10 | UB | 1'-6" | 6'-8" | MTE | F1 | WD | | |
| 11 | UB | 1'-4" | 6'-8" | MTE | F1 | WD | | |
| 12 | UDD | 4'-0" | 6'-8" | MTE | | WD | | SLIDING BARN DOOR |
| 13 | UBB | 5'-0" | 6'-8" | MTE | F2 | WD | | DOUBLE SWING DOOR |
| 14 | UCC | 5'-0" | 6'-8" | MTE | F2 | WD | | LOUVERED BI-FOLD |
| 15 | UCC | 6'-0" | 6'-8" | MTE | F2 | WD | | LOUVERED BI-FOLD |
| 19 | UB | 1'-9" | 6'-8" | MTE | F1 | WD | | |
| E | | 3'-0" | 7'-0" | | | | | |
| EE | | 6'-0" | 7'-0" | | | | | |
| F | | 6'-0" | 7'-0" | | | | | *RATED GLASS |

## UNIT DOOR TYPES




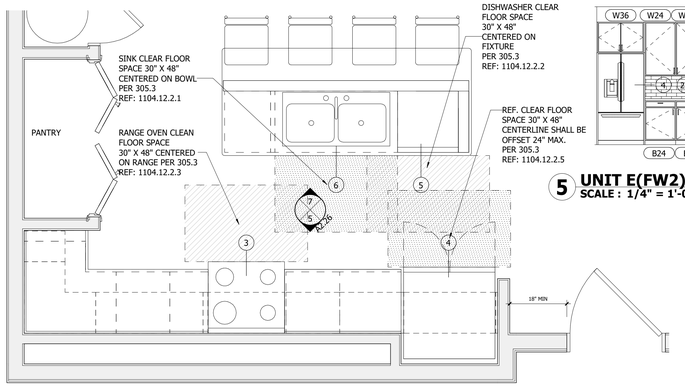


## 2 UNIT E(FW-2) - KITCHEN - PLAN
SCALE : 1/2" = 1'-0"

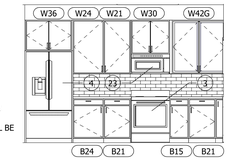


## 5 UNIT E(FW2) KITCHEN - 1
SCALE : 1/4" = 1'-0"

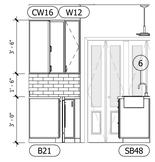


## 6 UNIT E(FW2) KITCHEN - 2
SCALE : 1/4" = 1'-0"

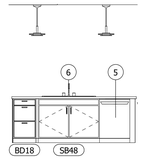


## 7 UNIT E(FW2) KITCHEN - 3
SCALE : 1/4" = 1'-0"

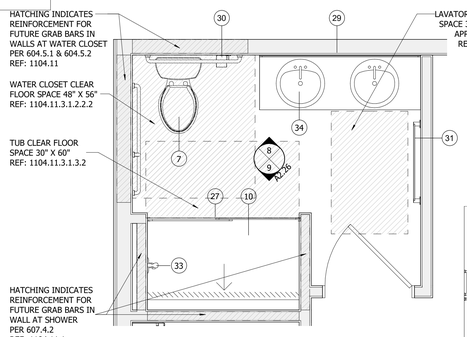


## 3 UNIT E(FW-2) - BATHROOM 1 - PLAN
SCALE : 1/2" = 1'-0"

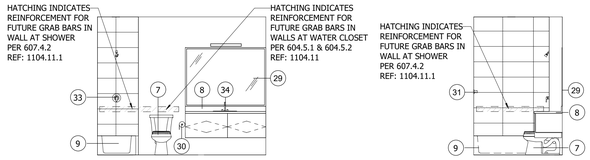


## 10 UNIT E(FW2) BATH 2 - 1
SCALE : 1/4" = 1'-0"




## 11 UNIT E(FW2) BATH 2 - 2
SCALE : 1/4" = 1'-0"

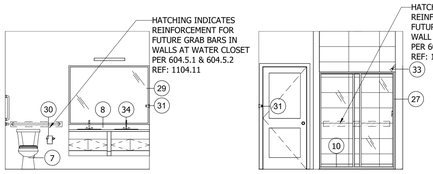


## 8 UNIT E(FW2) BATH 1 - 1
SCALE : 1/4" = 1'-0"

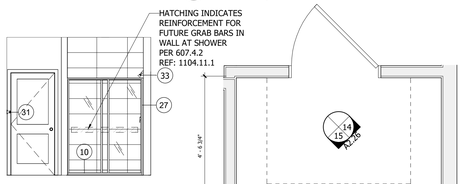


## 9 UNIT E(FW2) BATH 1 - 2
SCALE : 1/4" = 1'-0"

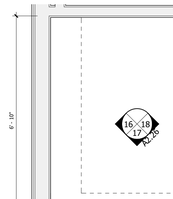


## 13 UNIT E(FW2) - CLOSET 2 - PLAN
SCALE : 1/2" = 1'-0"

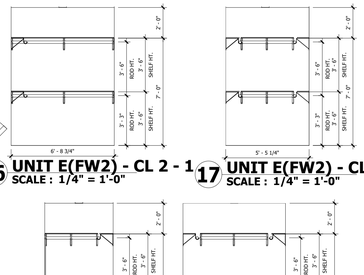


## 16 UNIT E(FW2) - CL 2 - 1
SCALE : 1/4" = 1'-0"

## 17 UNIT E(FW2) - CL 2 - 2
SCALE : 1/4" = 1'-0"




## 12 UNIT E(FW2) - CLOSET 1 - PLAN
SCALE : 1/2" = 1'-0"




## 14 UNIT E(FW2) - CLOSET 1 - ELEV 1 & 2
SCALE : 1/4" = 1'-0"

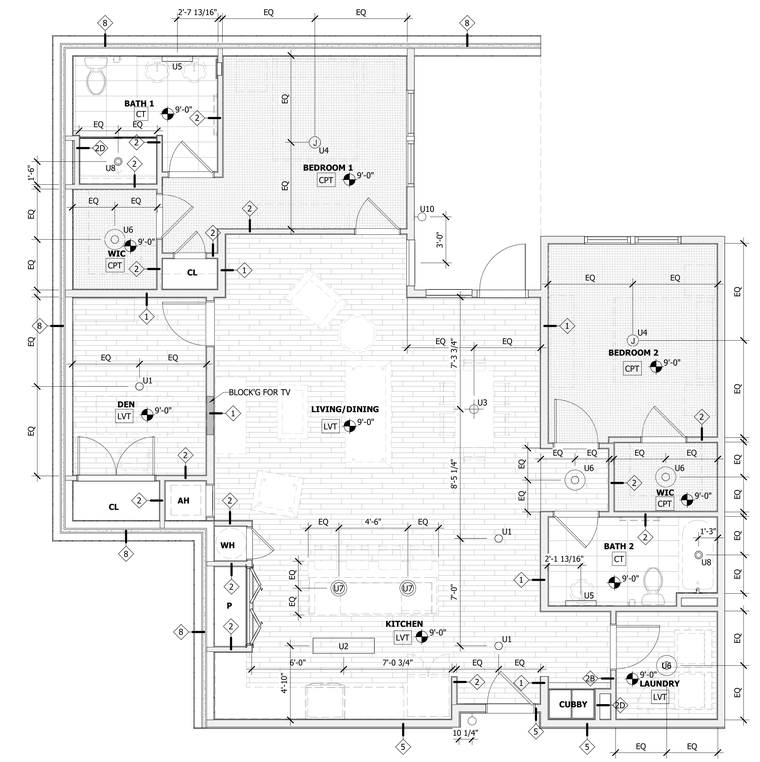


## 1A UNIT E-FW2 RCP
SCALE : 1/4" = 1'-0"

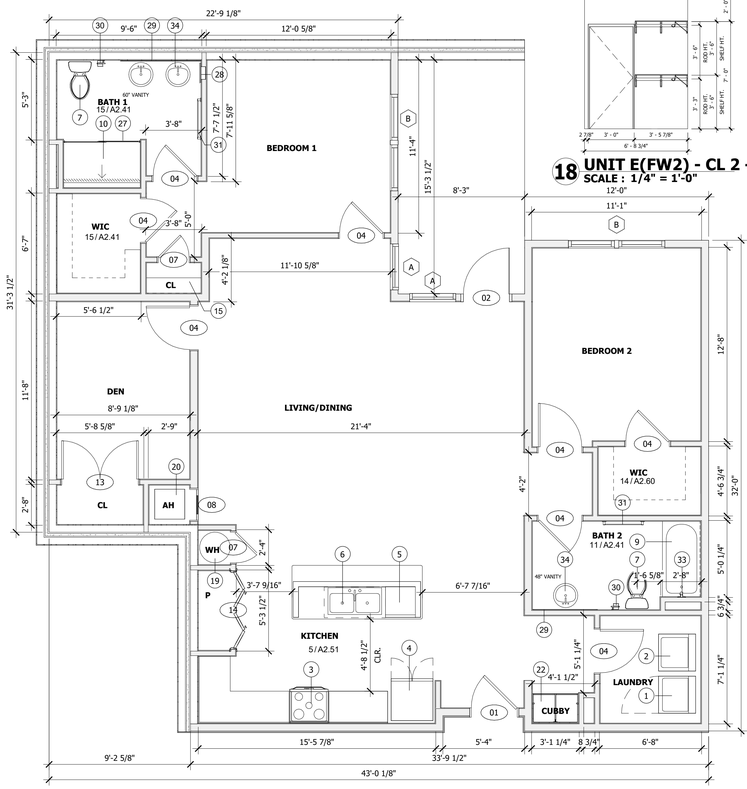


## 1 UNIT - E (FW-2)
SCALE : 1/4" = 1'-0"




## 18 UNIT E(FW2) - CL 2 - 3
SCALE : 1/4" = 1'-0"

| ROOM # |
|---|
| UNIT E FW2 |
| 108 |
| 208 |
| 308 |
| 408 |
| Grand total: 4 |


ALL REPORTS, PLANS, SPECIFICATIONS AND COMPUTER FILES RELATING TO THIS PROJECT ARE THE PROPERTY OF THE MARTIN ARCHITECTURAL GROUP. THE MARTIN ARCHITECTURAL GROUP RETAINS ALL COMMON LAW, STATUTE AND OTHER RESERVED RIGHTS INCLUDING THE COPYRIGHT THERETO. REPRODUCTION OF THE MATERIAL HEREIN OR SUBSTANTIAL USE WITHOUT WRITTEN PERMISSION OF THE MARTIN ARCHITECTURAL GROUP VIOLATES THE COPYRIGHT LAWS OF THE UNITED STATES AND WILL BE SUBJECT TO LEGAL PROSECUTION.
©2022, The Martin Architectural Group, P.C.


REGISTERED ARCHITECT COMMONWEALTH OF PENNSYLVANIA JASON C. DECAMPLI ROMANIC No. 406005


THE MARTIN ARCHITECTURAL GROUP, P.C.
ARCHITECTS AND LAND PLANNERS
A PROFESSIONAL CORPORATION
240 NORTH 22ND STREET, PHILADELPHIA, PA, 19103
P (215) 665-1680 F (215) 561-5064


| | |
|---|---|
| P.A.: | DREW ROMANIC |
| P.M.: | JASON DECAMPLI |
| DRAWN BY: | Author |
| PROJECT NO: | 1362-12 |

| NO. | REVISION | DATE |
|---|---|---|
| A | PERMIT SET | 12/20/22 |
| 1 | PERMIT SET | 12/28/22 |

UNIT PLANS (E-FW2)

**Granite Run Apartment 02**

MIDDLETOWN TOWNSHIP, PA

SCALE:

DATE: 07/19/22

**A2.26**


©2022, The Martin Architectural Group, P.C.


Printed: 1/13/2023 4:32:18 PM

## UNIT DOOR TYPES

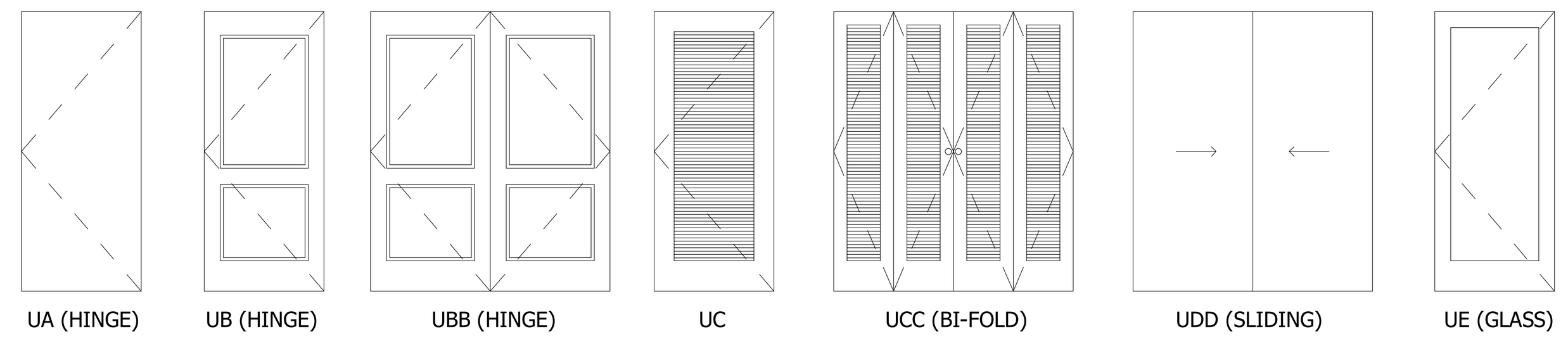


## FRAME TYPES

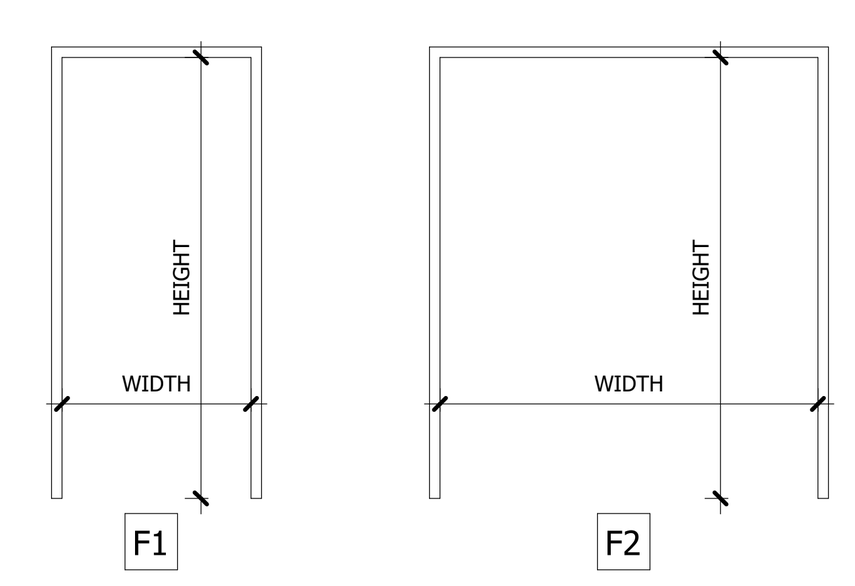


**DOOR/FRAME MATERIAL KEY:**

| | |
|---|---|
| AL | ALUMINUM |
| EM | EXTERIOR METAL |
| GL | GLASS |
| HC | HOLLOW CORE |
| HM | HOLLOW METAL |
| MTL | METAL |
| SC | SOLID CORE |
| SR | STILE & RAIL |
| VY | VINYL |
| WD | WOOD |
| MTE | MASONITE |

**ROOM FINISH MATERIAL CODE**

| | |
|---|---|
| CPT | CARPET |
| CT | CERAMIC TILE |
| CONC | CONCRETE |
| GWB | GYPSUM WALL BOARD |
| MR GWB | MOISTURE RESISTANT GWB |
| V | SHEET VINYL |
| VWP | VINYL WOOD PLANK |
| VCT | VINYL COMPOSITE TILE |
| WD | WOOD |

**DOOR SCHEDULE - DWELLING UNIT**

| MARK | DOOR TYPE | WIDTH | HEIGHT | DOOR MATERIAL | FRAME TYPE | FRAME MATERIAL | FIRE RATING | REMARKS |
|---|---|---|---|---|---|---|---|---|
| 01 | UA | 3'-0" | 7'-0" | MTL | F1 | MTL | 20 min. | UNIT ENTRY - SPRING HINGES |
| 02 | UE | 3'-0" | 7'-0" | VY | F1 | VY | | BALCONY DOOR |
| 03 | UB | 3'-0" | 6'-8" | MTE | F1 | WD | | |
| 04 | UB | 2'-10" | 6'-8" | MTE | F1 | WD | | |
| 05 | UA | 2'-10" | 6'-8" | EM | F1 | MTL | | UNIT EXT. MECH DOOR |
| 06 | UB | 2'-6" | 6'-8" | MTE | F1 | WD | | |
| 07 | UB | 2'-0" | 6'-8" | MTE | F1 | WD | | |
| 08 | UC | 2'-0" | 6'-8" | MTE | F1 | WD | | LOUVERED AIR HANDLER |
| 09 | UC | 1'-6" | 6'-8" | MTE | F1 | WD | | LOUVERED AIR HANDLER |
| 10 | UB | 1'-6" | 6'-8" | MTE | F1 | WD | | |
| 11 | UB | 1'-4" | 6'-8" | MTE | F1 | WD | | |
| 12 | UDD | 4'-0" | 6'-8" | MTE | | WD | | SLIDING BARN DOOR |
| 13 | UBB | 5'-0" | 6'-8" | MTE | F2 | WD | | DOUBLE SWING DOOR |
| 14 | UCC | 5'-0" | 6'-8" | MTE | F2 | WD | | LOUVERED BI-FOLD |
| 15 | UCC | 6'-0" | 6'-8" | MTE | F2 | WD | | LOUVERED BI-FOLD |
| 19 | UB | 1'-9" | 6'-8" | MTE | F1 | WD | | |
| E | | 3'-0" | 7'-0" | | | | | |
| EE | | 6'-0" | 7'-0" | | | | | |
| F | | 6'-0" | 7'-0" | | | | | *RATED GLASS |

**WINDOW SCHEDULE**

| MARK | WIDTH | HEIGHT | WINDOW TYPE | CONSTRUCTION TYPE | COMMENTS |
|---|---|---|---|---|---|
| A | 3'-0" | 6'-0" | SINGLE HUNG | VINYL | All windows to be provided with opening limiters. See specifications. |
| B | 6'-3 1/2" | 6'-0" | SINGLE HUNG | VINYL | All windows to be provided with opening limiters. See specifications. |

**UNIT PLAN AND INTERIOR ELEVATION KEYNOTES**

| Number | Description |
|---|---|
| 1 | WASHER |
| 2 | DRYER |
| 3 | RANGE / OVEN |
| 4 | REFRIGERATOR |
| 5 | DISHWASHER |
| 6 | KITCHEN SINK / FAUCET |
| 7 | TOILET |
| 8 | VANITY - SEE ELEVATION FOR SIZE |
| 9 | 30"X60" TUB |
| 10 | 36"X60" SHOWER BASE |
| 11 | 32"X60" SHOWER BASE |
| 12 | ACCESSIBLE THRESHOLD - MARBLE |
| 13 | ACCESSIBLE THRESHOLD - ALUMINIUM |
| 14 | SOFFIT OVER REFRIGERATOR AND BEHIND CABINET |
| 15 | LINEN SHELVES (5) PER SPECIFICATION |
| 16 | WIRE SHEVLING |
| 17 | KNEE WALL BELOW COUNTERTOP |
| 18 | BALCONY RAILING @ 42" HIGH |
| 19 | WALL MOUNTED HOT WATER HEATER |
| 20 | HVAC UNIT MOUNTED ON WALL |
| 21 | PRE ROCK BEHIND BATHING FIXTURES |
| 22 | CUBBIE CABINETS |
| 23 | MICROWAVE WITH RECIRCULATION HOOD |
| 24 | WALL TILE BETWEEN CONTERTOP AND WALL CABINET. SEE 1D DRAWING |
| 25 | BLOCKING FOR GRAB BAR. SEE FIG. 4-SHEET A0.06 |
| 26 | 24" HORIZONTAL GRAB BAR @ TUB BACK WALL. SEE FIG. 4 - SHEET A0.06 |
| 27 | SHOWER ROD |
| 28 | NOT USED |
| 29 | PAINTED FRAME MIRROR |
| 30 | TOILET TISSUE HOLDER @ 26" A.F.F. |
| 31 | 30" TOWEL BAR |
| 32 | ROBE HOOK |
| 33 | SHOWER HEAD |
| 34 | VANITY SINK BOWL |

**NOTES:**

1. SEE SPECIFICATIONS FOR ADDITIONAL INFORMATION.
2. ALL DOOR HARDWARE TO BE COMPLIANT WITH THE FEDERAL FAIR HOUSING ACT (FHA).
3. DOORS SHALL BE OPENABLE WITH NO MORE THAN ONE RELEASING OPERATION.
4. PROVIDE ACCESSIBLE THRESHOLDS AT ALL DOORS.
5. ALL UNITS ARE ADAPTABLE PER FHA. SEE SHEET A0.06 FOR ADDITIONAL INFORMATION.
6. ALL DIMENSIONS ARE TO ROUGH FRAMING U.N.O.
7. ALL WALLS ARE 2X4 STUDS UNLESS NOTED OTHERWISE.
8. ALL TENANT SEPERATIONS AND CORRIDOR WALLS ARE 2X6 UNLESS NOTED OTHERWISE.
9. PATIO AT FIRST FLOOR 4" BELOW UNIT FINISH FLOOR.
10. BALCONIES ARE FLUSH WITH GYPCRETE TOPPING. SEE DETAIL.
11. ALL TOILETS SET ON NEOPRENE GASKET WITH INSULATED PIPE TRAP.
12. ALL KITCHEN APPLIANCES TO HAVE STAINLESS STEEL FRONTS.
13. WHERE DRAWINGS ARE IN CONFLICT WITH OTHER DRAWINGS, CONTRACTOR SHALL NOTIFY THE ARCHITECT.
14. PROVIDE BLOCKING FOR GRAB BARS IN ALL BATHROOMS
15. DIMENSION TO STUD UNLESS OTHERWISE NOTED
16. DIMESNION TO FINISH @ CABINETS
17. PROVIDE BLOCKING FOR TV WALL MOUNT, CENTER AT 60" A.F.F.
18. ALL BATHROOM VANITES ARE 21" IN DEPTH

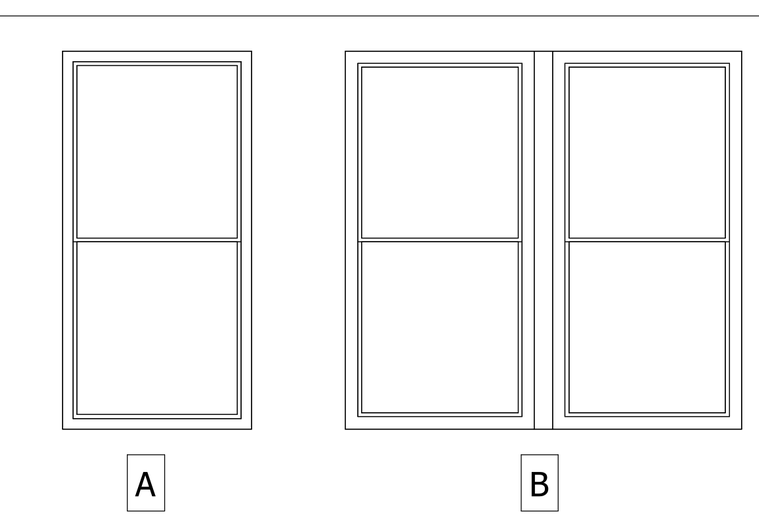


NOTE: (2) 2X6 FRT STUDS PROVIDED BETWEEN GROUP WINDOWS. (TYPICAL) PROVIDE 4" LIMITATION FOR WINDOW LIMITERS ON ALL WINDOWS

**ROOM FINISH SCHEDULE**

| SPACE | FLOOR | WALL | CEILING | HEIGHT | REMARKS |
|---|---|---|---|---|---|
| KITCHEN | 3 | A | 1 | 9'-0" | |
| LIVING RM. | 3 | A | 1 | 9'-0" | |
| BEDROOMS | 1 | A | 1 | 9'-0" | |
| DEN | 3 | A | 1 | 9'-0" | |
| BATHS | 4 | B/C | 2 | 9'-0" | |
| CLOSETS | | A | 1 | 9'-0" | FLOORING: MATCH ADJ. |
| LAUNDRY | 3 | A | 2 | 9'-0" | FLOORING: MATCH ADJ. |
| UNIT-HVAC | | A | 1 | 9'-0" | FL.: GYPCRETE PAINT-LIGHT GRAY |

**MATERIAL CODE**

| FLR. / BASE | | WALL | | CEILING | |
|---|---|---|---|---|---|
| 1 | CPT / WD | A | G.W.B. | 1 | G.W.B. |
| 2 | | B | MR.G.W.B. | 2 | MR.G.W.B. |
| 3 | LVT / WD | C | CT-2 | 3 | |
| 4 | CT / CT | D | | 4 | |
| 5 | | E | | 5 | |
| 6 | | F | | 6 | |
| 7 | | G | | 7 | |
| 8 | | H | | 8 | |

MATERIAL GLOSSARY

| | |
|---|---|
| CPT | CARPET - SHAW GULF WINDS - COLOR: 532 MINERAL |
| CT-1 | CERAMIC TILE - 12X24 FLORIM MATERIA - COLOR: HONED 02 |
| CT-2 | CERAMIC TILE - 12X24 FLORIM MATERIA - COLOR: STONE CALACATTA |
| G.W.B. | GYPSUM WALL BOARD |
| MR.G.W.B. | MOISTURE RESISTANT G.W.B. |
| LVT | VINYL WOOD PLANK - SHAW TERRAIN 12 MIL - COLOR: 766 ECHO |
| WD. | WOOD |

**LIGHT FIXTURE LEGEND**

| | |
|---|---|
| U1 | LITHONIA FMSATL-16-20840-BN; SEMI FLUSH MOUNT |
| U2 | LITHONIA FMFL-30840-SATL-BN; LINEAR FLUSH MOUNT |
| U3 | LITHONIA DFMADRL-14-F01; FMPANL-14-20840M6; LED SURFACE MOUNT DRUM |
| U4 | SATCO COVER PLATE |
| U5 | PROGRESS P300187-009-30; LED BATH VANITY |
| U6 | LITHONIA FMMUSL-9-14840-WH; LED CLOSET MUSHROOM |
| U7 | LITHONIA MDPC-BNP-M6; DGDT 1003 M6 |
| U8 | COOPER SMD6R-12-930-WH; 1200 LUMEN SLIM SURFACE (120 VOLT ONLY) |
| U9 | NUVO 62-1161; 7" LED FLUSH MOUNT DISCK |
| U10 | LITHONIA OLWPLED-P1-40K-120-PE-BZ; LED MINI WALL PACK |

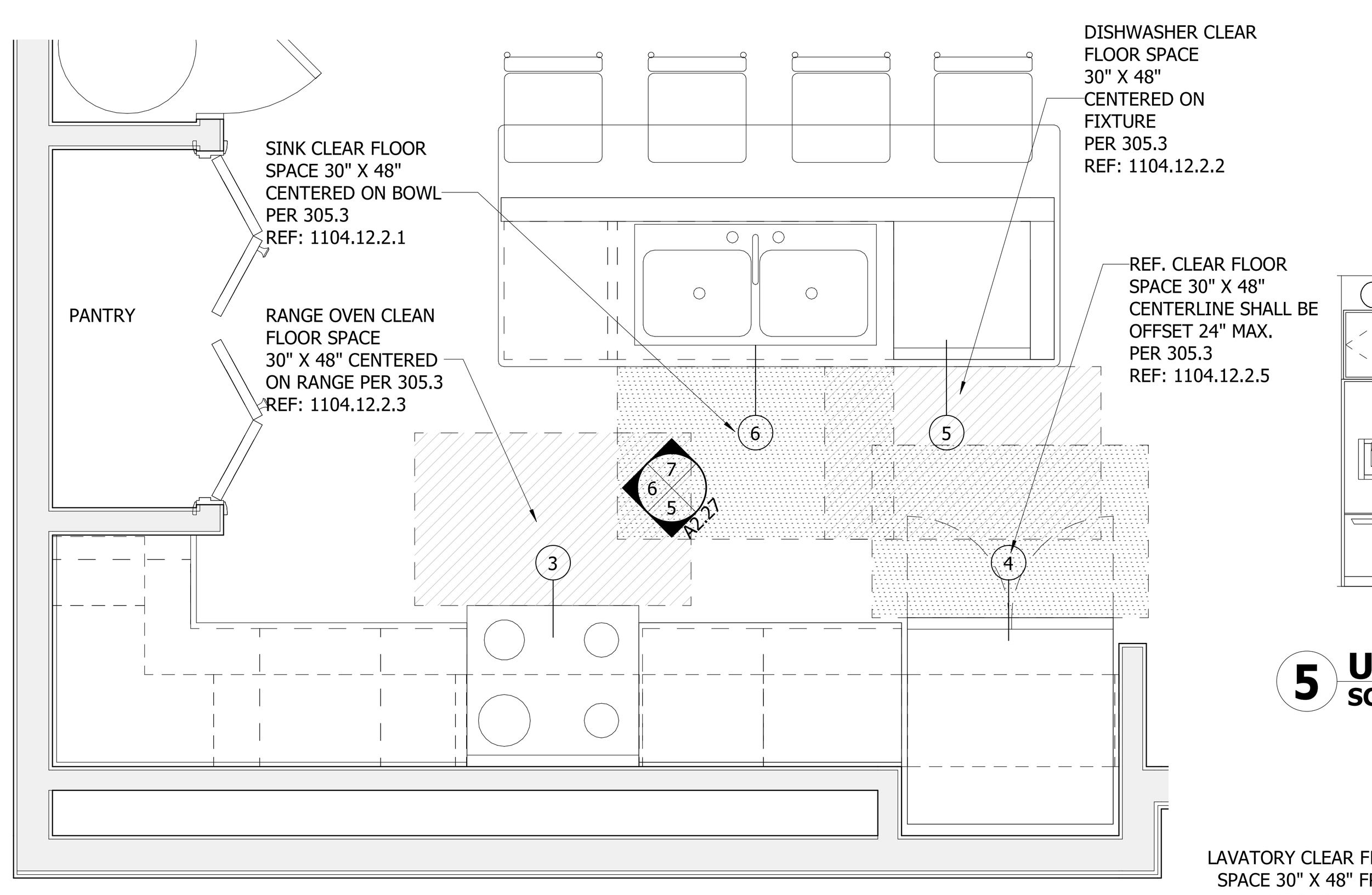


2 UNIT E(FW-3) - KITCHEN - PLAN
SCALE : 1/2" = 1'-0"

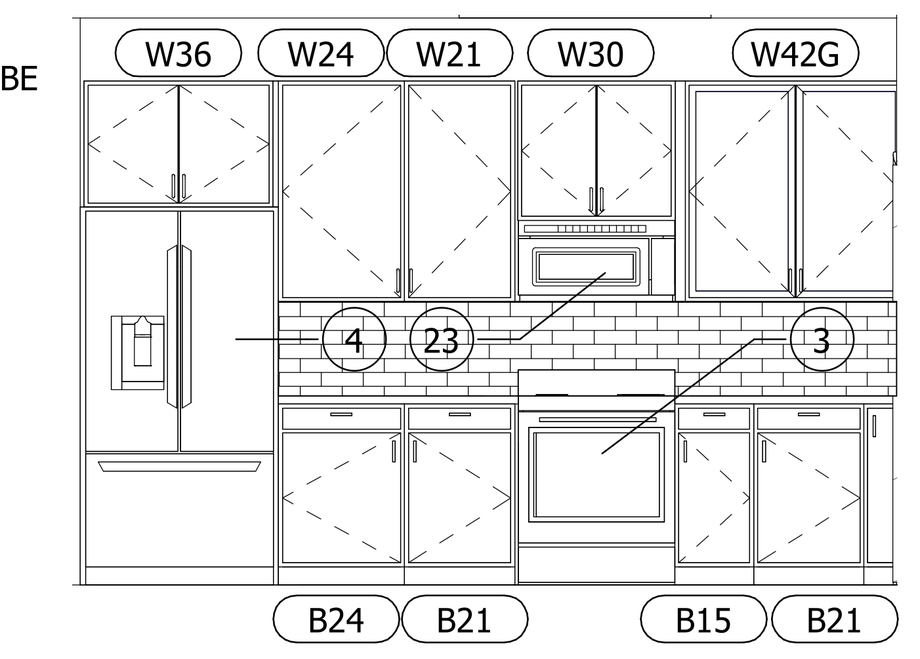


5 UNIT E(FW3) KITCHEN - 1
SCALE : 1/4" = 1'-0"

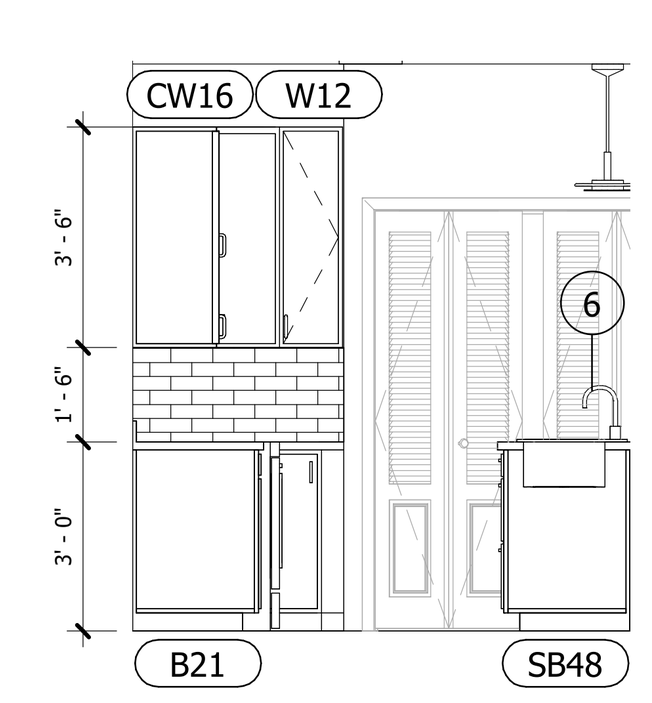


6 UNIT E(FW3) KITCHEN - 2
SCALE : 1/4" = 1'-0"

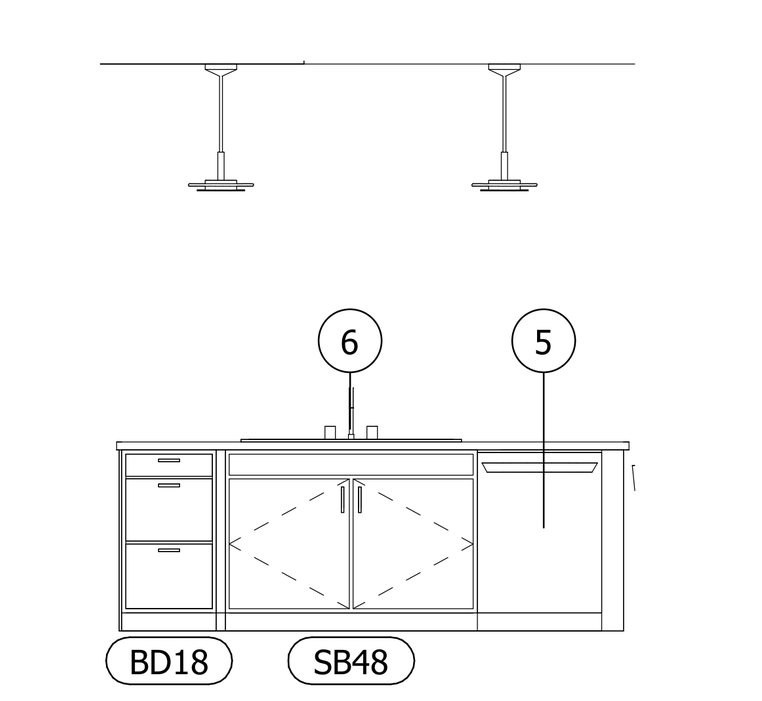


7 UNIT E(FW3) KITCHEN - 3
SCALE : 1/4" = 1'-0"

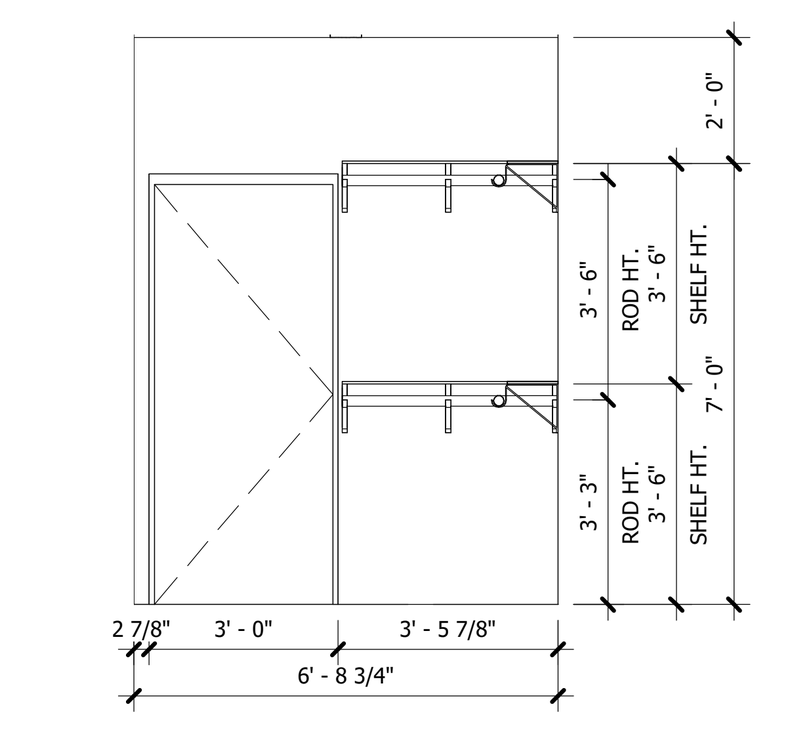


18 UNIT E(FW3) - CL 2 - 3
SCALE : 1/4" = 1'-0"

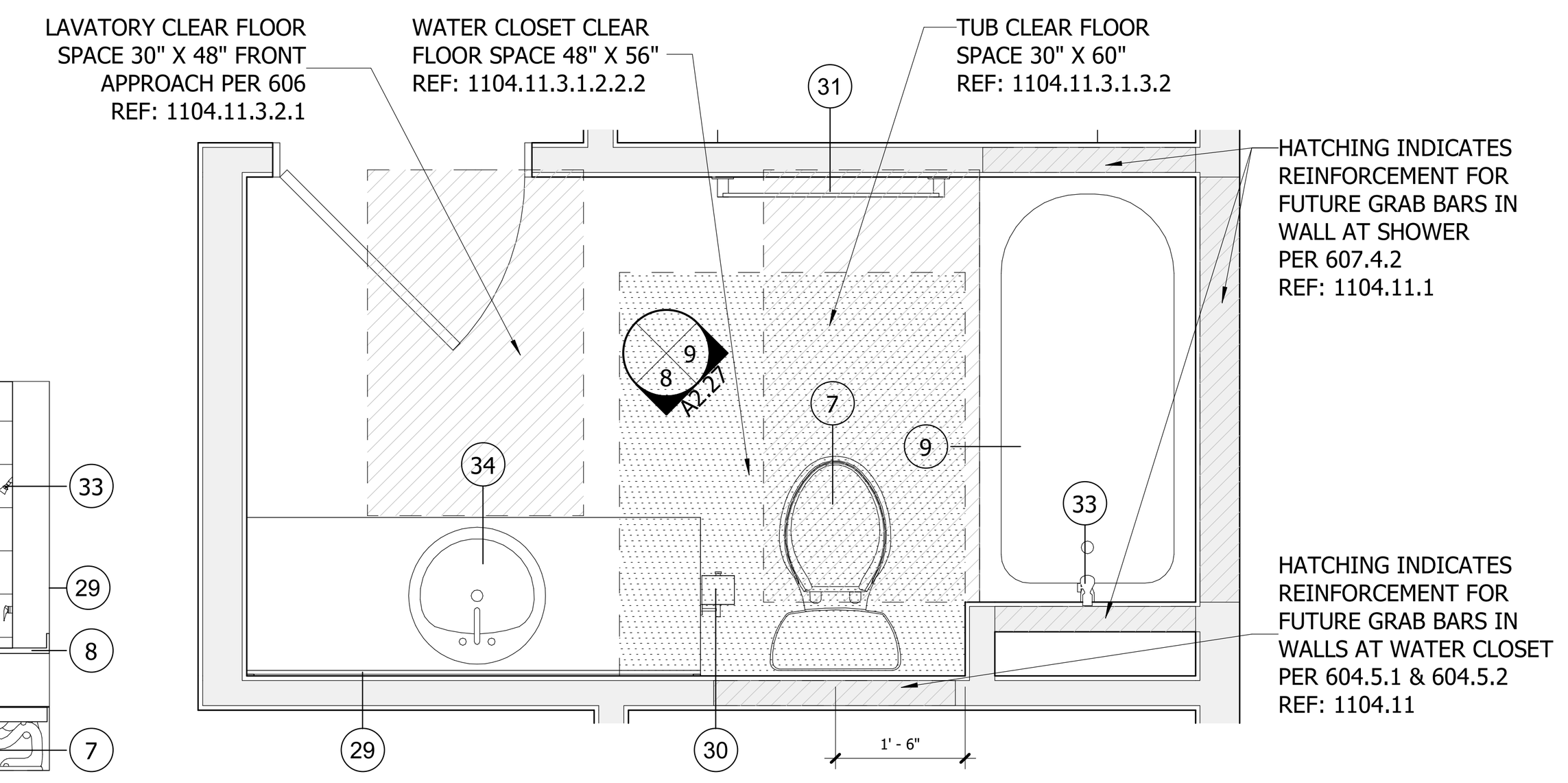


3 UNIT E(FW-3) - BATHROOM 1 - PLAN
SCALE : 1/2" = 1'-0"

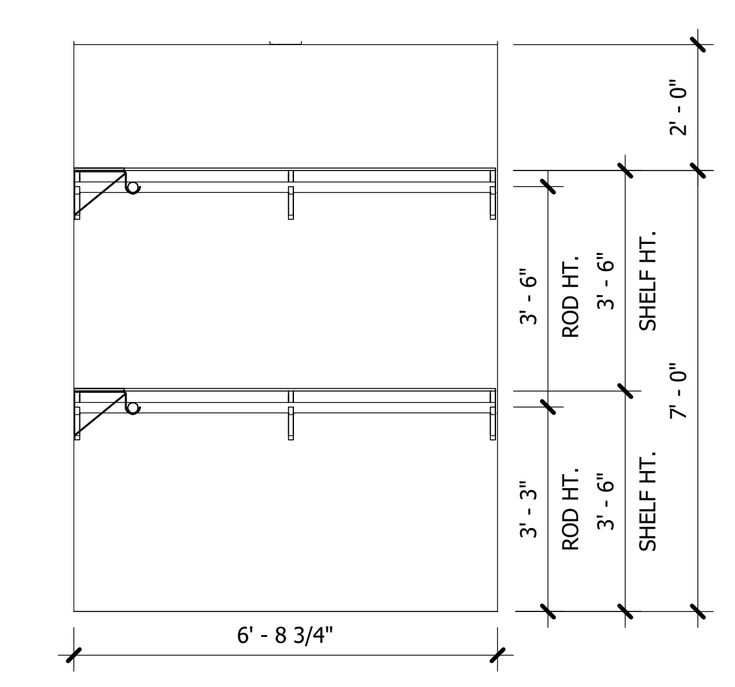


16 UNIT E(FW3) - CL 2 - 1
SCALE : 1/4" = 1'-0"

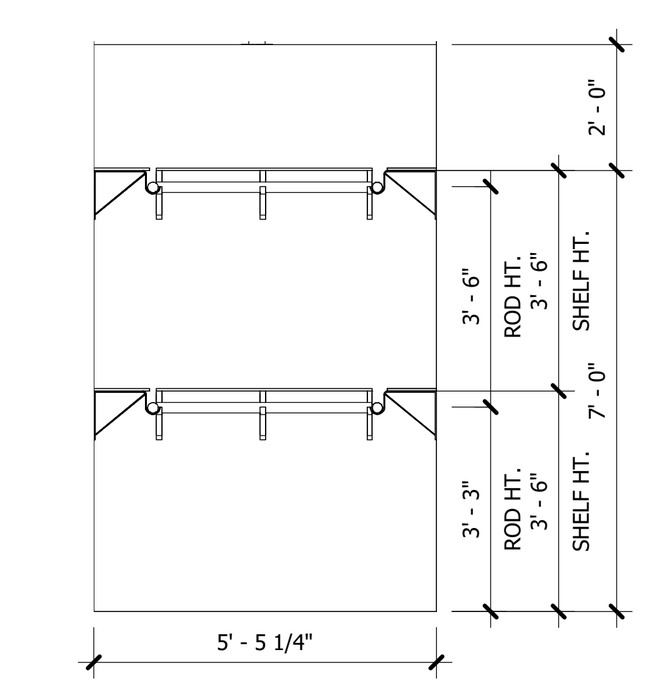


17 UNIT E(FW3) - CL 2 - 2
SCALE : 1/4" = 1'-0"

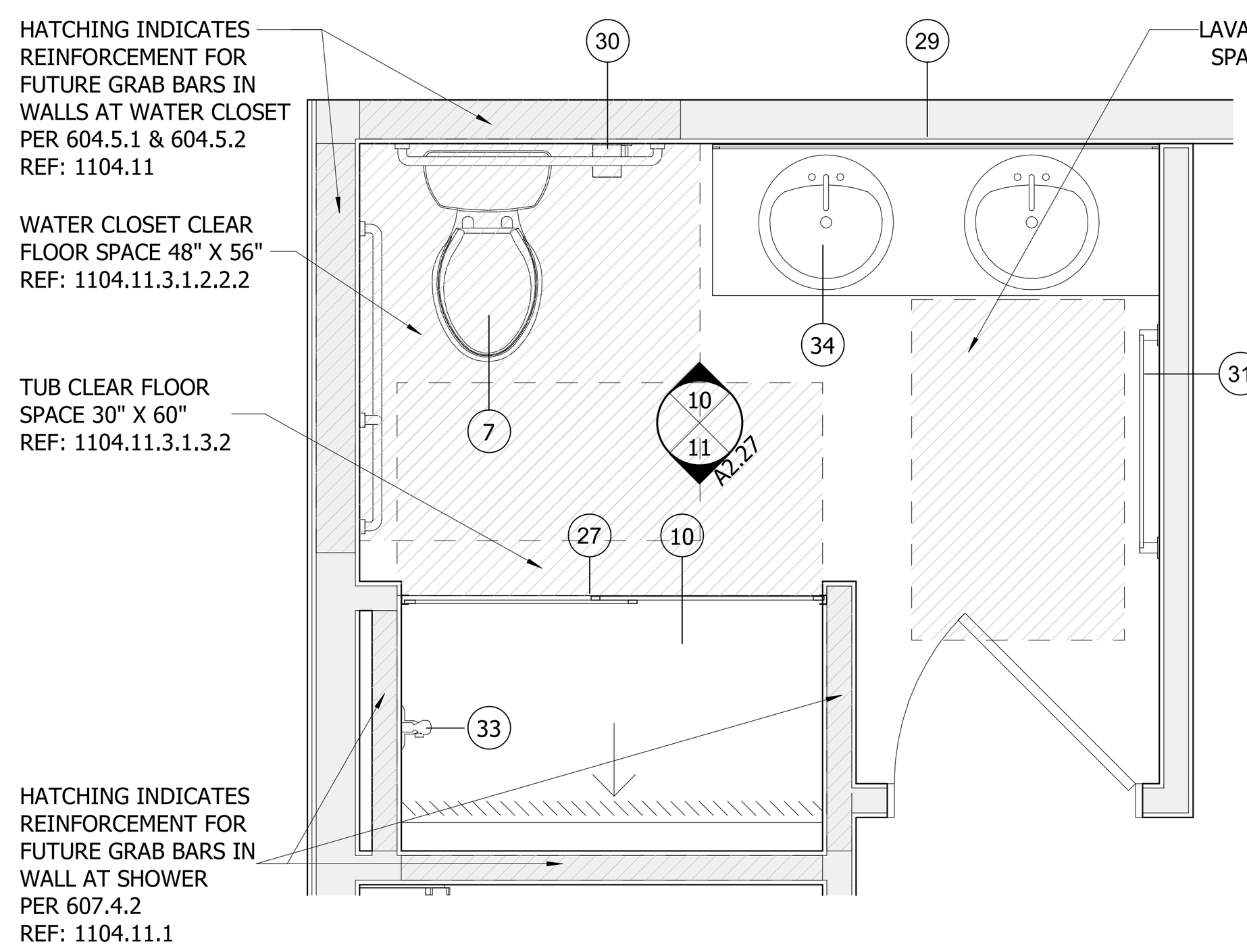


4 UNIT E(FW-3) - BATHROOM 2 - PLAN
SCALE : 1/2" = 1'-0"

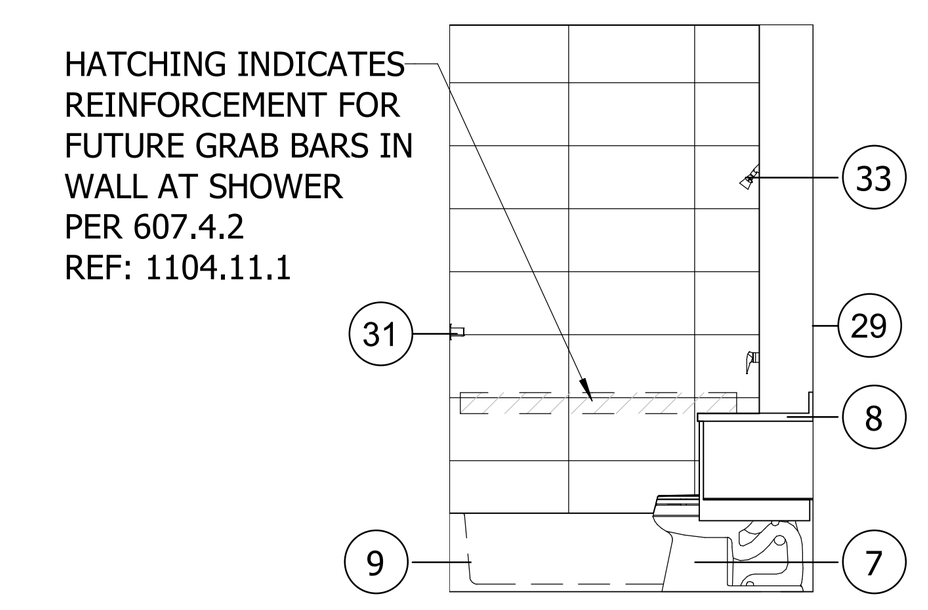


9 UNIT E(FW3) BATH 1 - 2
SCALE : 1/4" = 1'-0"

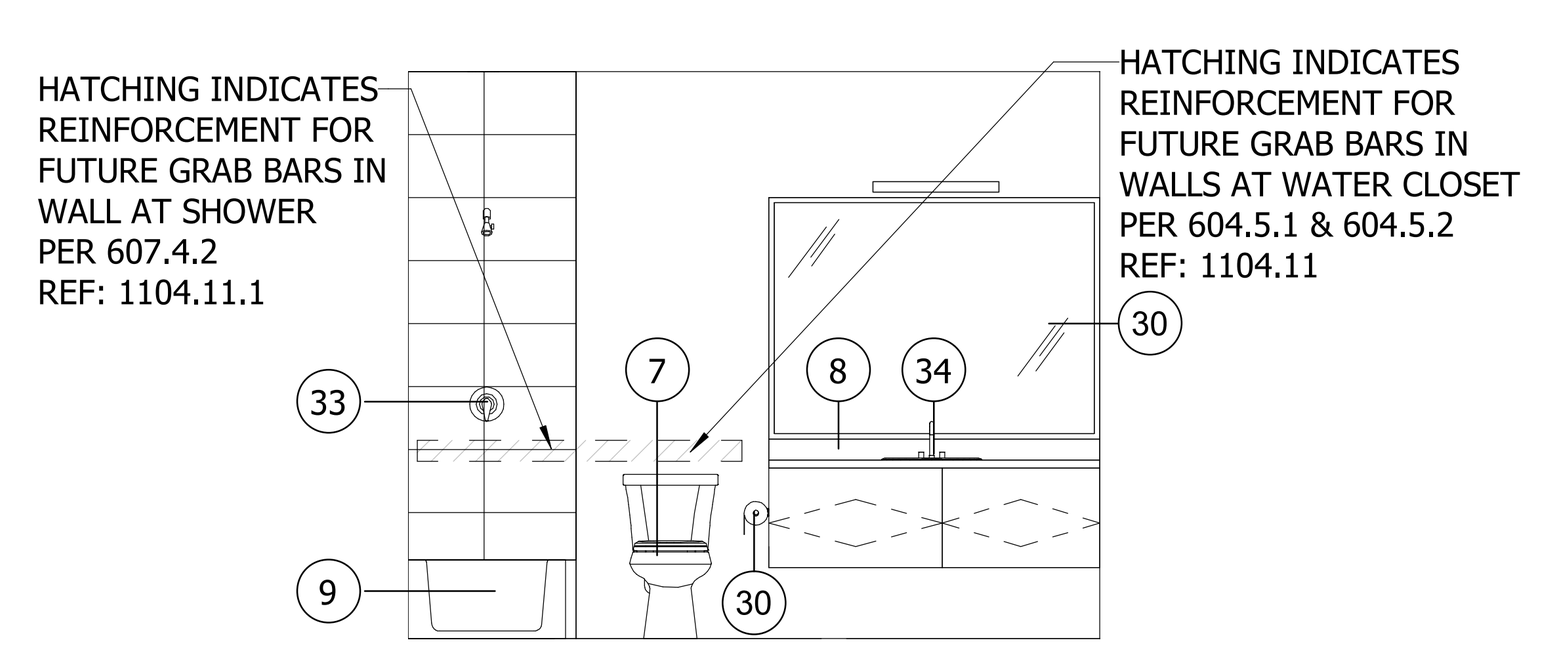


8 UNIT E(FW3) BATH 1 - 1
SCALE : 1/4" = 1'-0"

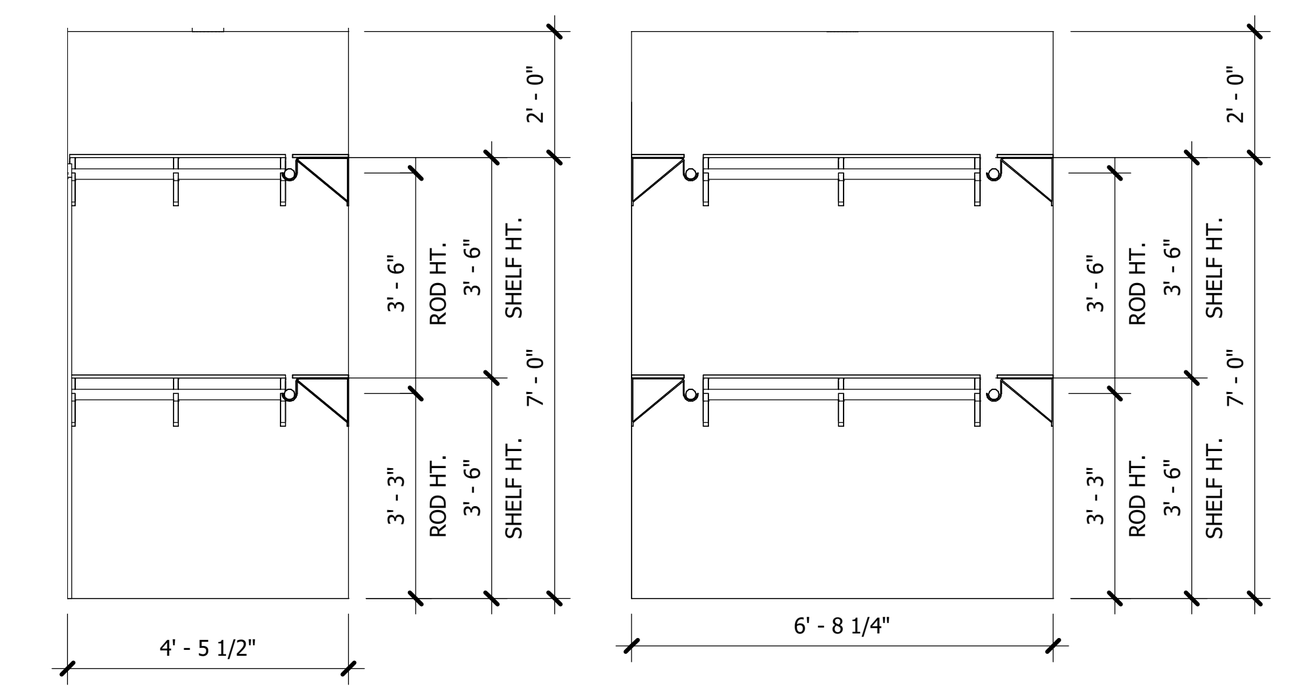


14 UNIT E(FW3) - CLOSET 1 - ELEV 1 & 2
SCALE : 1/4" = 1'-0"

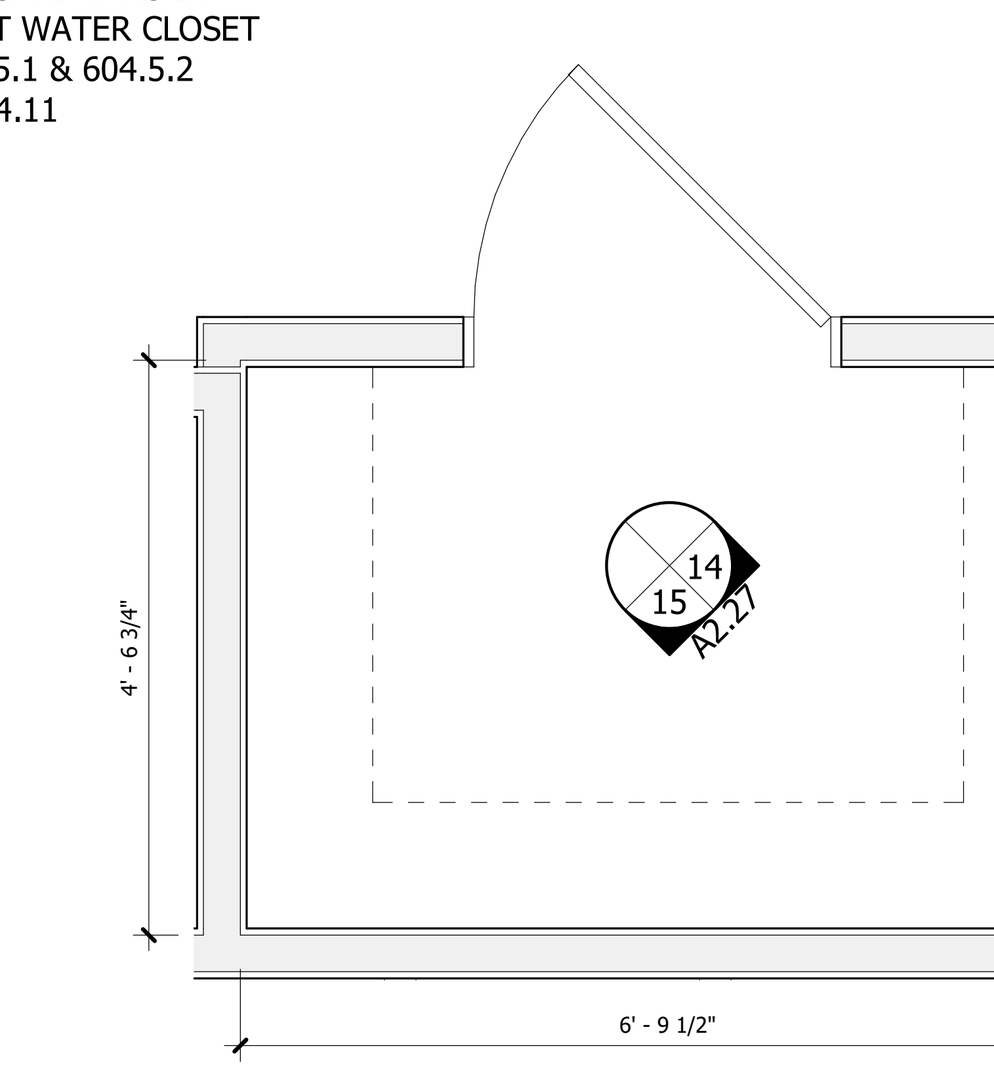


12 UNIT E(FW3) - CLOSET 1 - PLAN
SCALE : 1/2" = 1'-0"

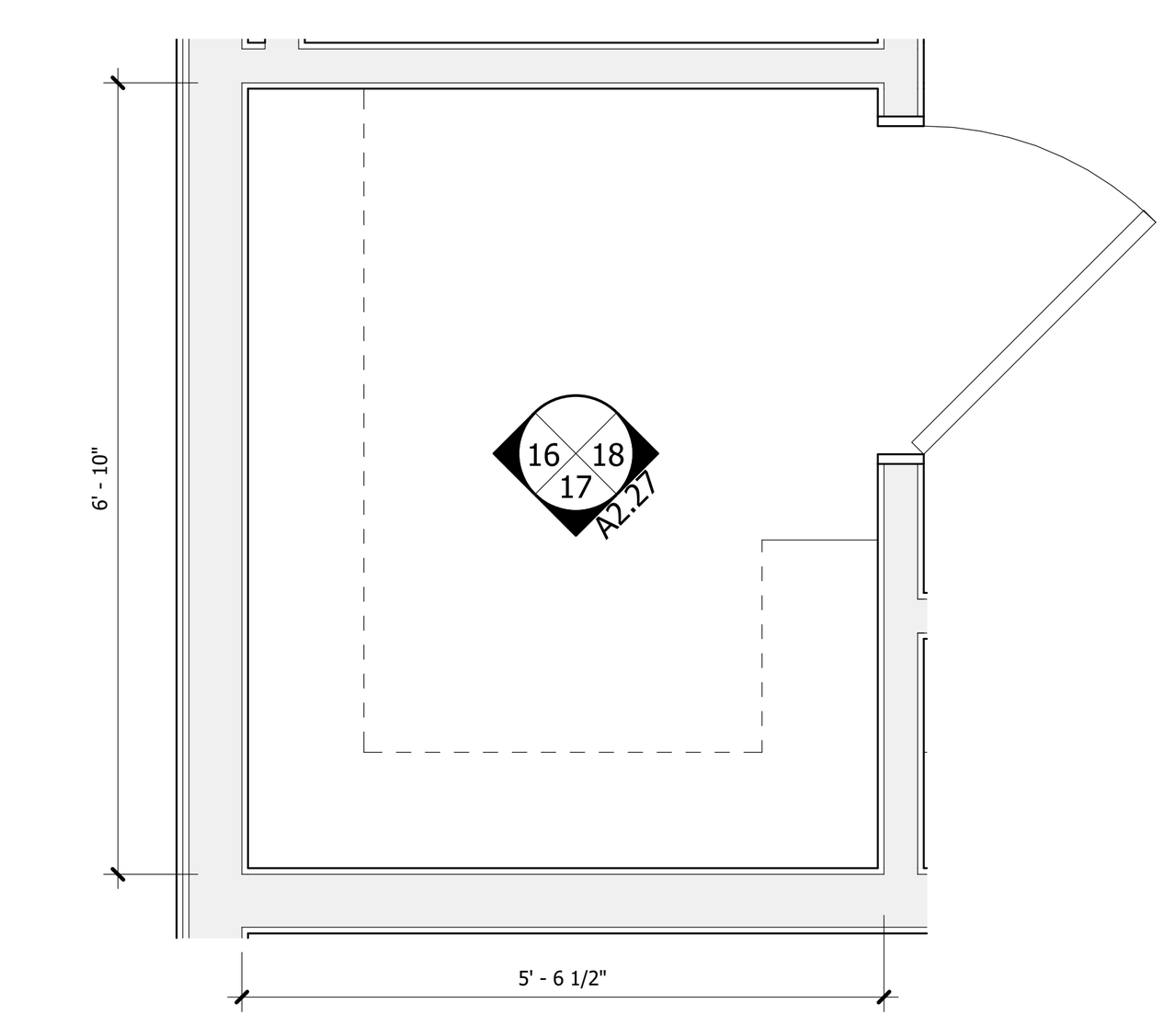


13 UNIT E(FW3) - CLOSET 2 - PLAN
SCALE : 1/2" = 1'-0"

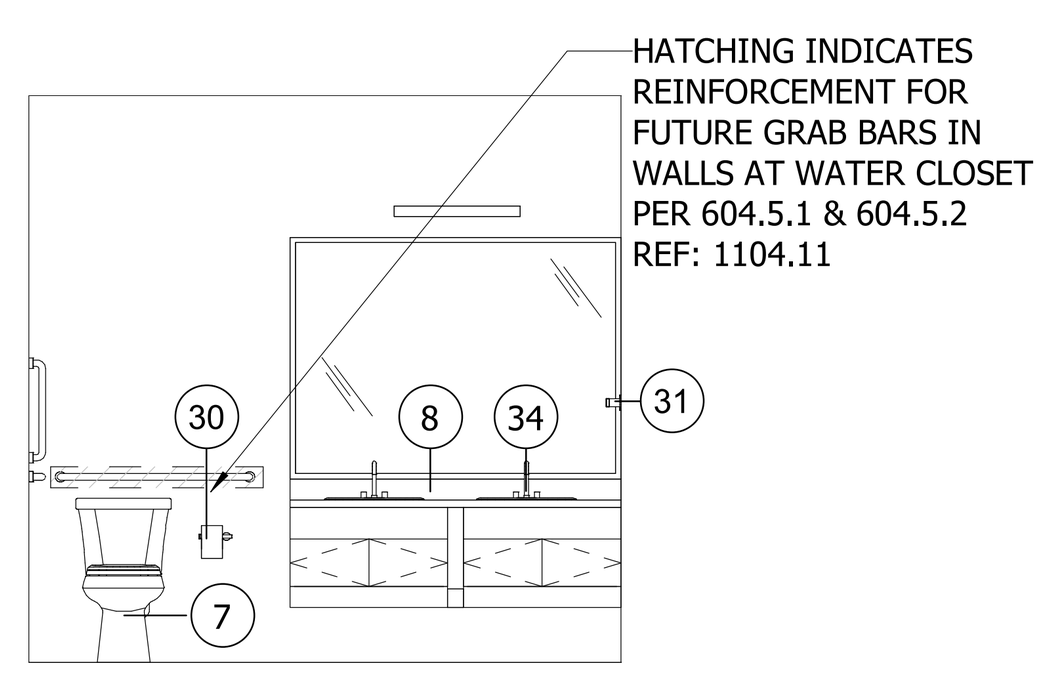


10 UNIT E(FW3) BATH 2 - 1
SCALE : 1/4" = 1'-0"

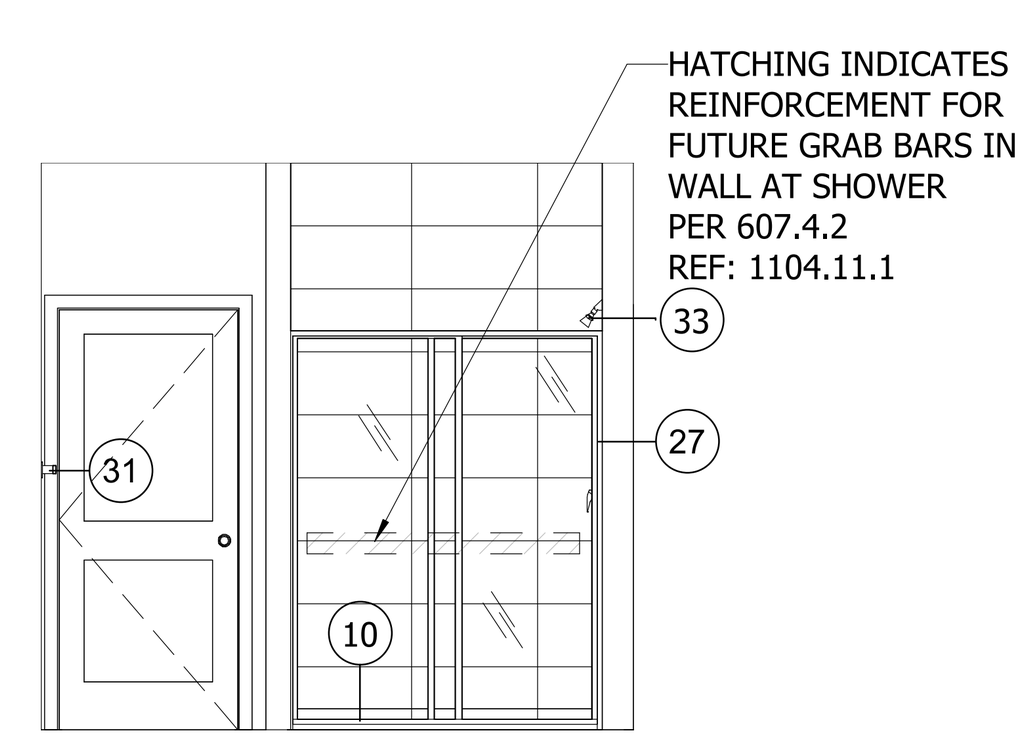


11 UNIT E(FW3) BATH 2 - 2
SCALE : 1/4" = 1'-0"

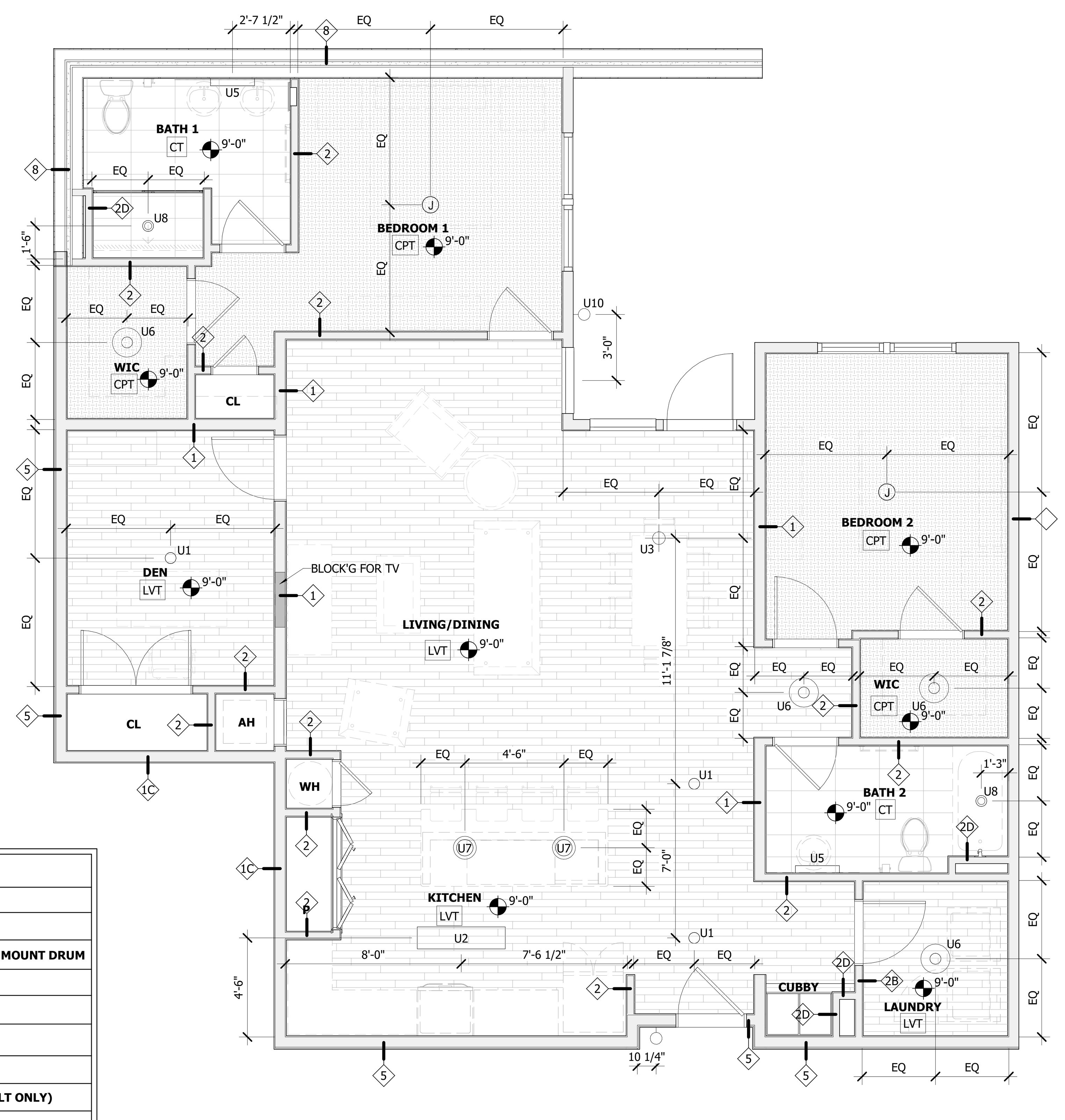


1A UNIT E-FW3 RCP
SCALE : 1/4" = 1'-0"

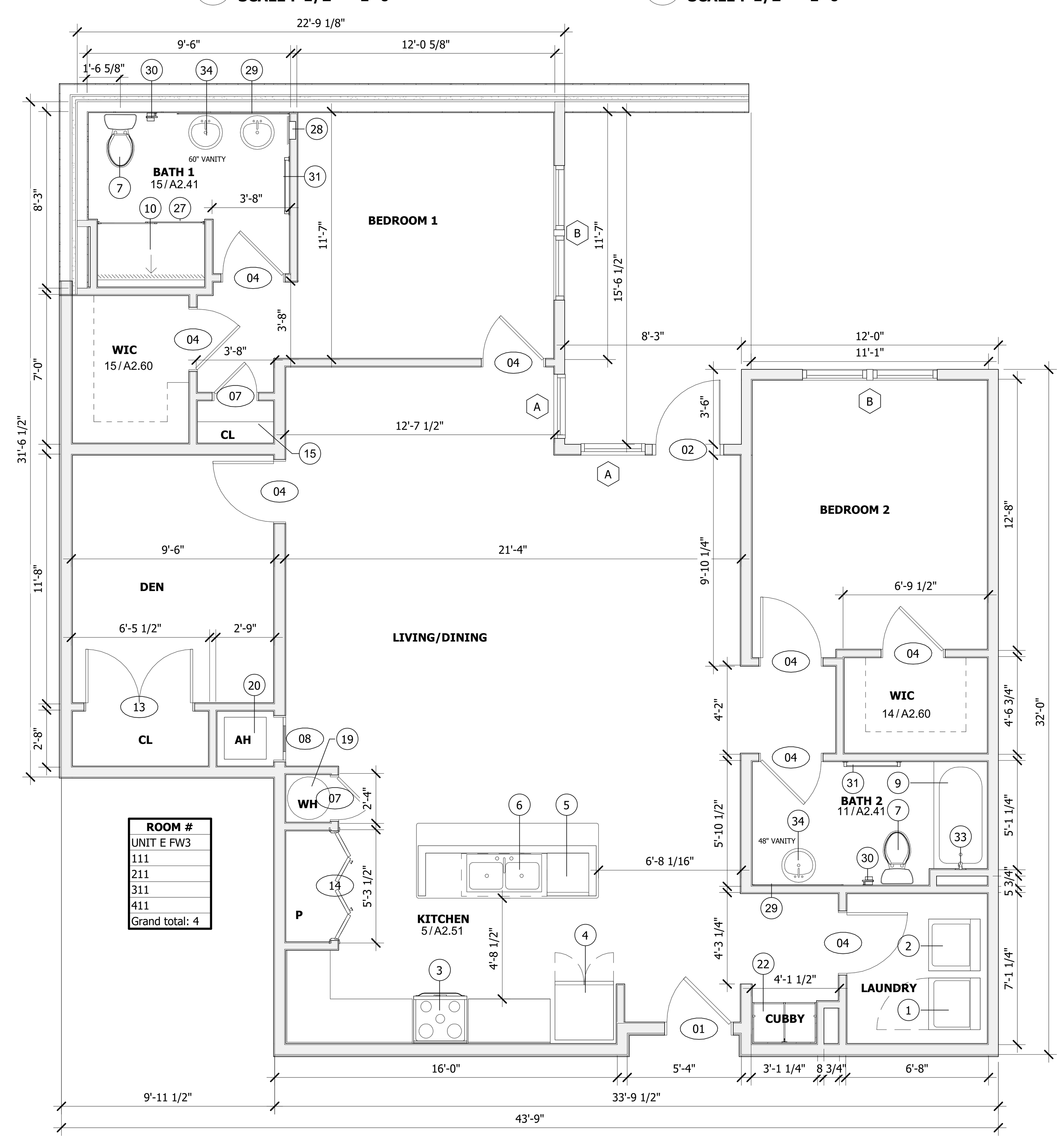


| ROOM # |
|---|
| UNIT E FW3 |
| 111 |
| 211 |
| 311 |
| 411 |
| Grand total: 4 |

1 UNIT - E (FW-3)
SCALE : 1/4" = 1'-0"

ALL REPORTS, PLANS, SPECIFICATIONS AND COMPUTER FILES RELATING TO THIS PROJECT ARE THE PROPERTY OF THE MARTIN ARCHITECTURAL GROUP. THE MARTIN ARCHITECTURAL GROUP RETAINS ALL COMMON LAW, STATUTE AND OTHER RESERVED RIGHTS INCLUDING THE COPY-RIGHT THERETO. REPRODUCTION OF THE MATERIAL HEREIN OR SUBSTANTIAL USE WITHOUT WRITTEN PERMISSION OF THE MARTIN ARCHITECTURAL GROUP VIOLATES THE COPYRIGHT LAWS OF THE UNITED STATES AND WILL BE SUBJECT TO LEGAL PROSECUTION.
©2022, The Martin Architectural Group, P.C.

REGISTERED ARCHITECT PENNSYLVANIA DREW ROMANIC No. RA407676

THE MARTIN ARCHITECTURAL GROUP, P.C.
ARCHITECTS AND LAND PLANNERS
A PROFESSIONAL CORPORATION
240 NORTH 22ND STREET, PHILADELPHIA, PA, 19103
P (215) 665-1080 F (215) 561-5064

| | |
|---|---|
| P.A.: | DREW ROMANIC |
| P.M.: | JASON DECAMPLI |
| DRAWN BY: | Author |
| PROJECT NO: | 1362-12 |

| NO. | REVISION | DATE |
|---|---|---|
| 1 | PERMIT SET | 12/20/22 |

# UNIT PLANS (UNIT E-FW3)

**Granite Run Apartment 02**

MIDDLETOWN TOWNSHIP, PA

| | |
|---|---|
| SCALE: | |
| DATE: | 09/15/22 |

**A2.27**

©2022, The Martin Architectural Group, P.C.

Printed: 1/13/2023 4:32:33 PM

| DOOR SCHEDULE - DWELLING UNIT | | | | | | | | |
|---|---|---|---|---|---|---|---|---|
| MARK | DOOR TYPE | WIDTH | HEIGHT | DOOR MATERIAL | FRAME TYPE | FRAME MATERIAL | FIRE RATING | REMARKS |
| 01 | UA | 3'-0" | 7'-0" | MTL | F1 | MTL | 20 min. | UNIT ENTRY - SPRING HINGES |
| 02 | UE | 3'-0" | 7'-0" | VY | F1 | VY | | BALCONY DOOR |
| 03 | UB | 3'-0" | 6'-8" | MTE | F1 | WD | | |
| 04 | UB | 2'-10" | 6'-8" | MTE | F1 | WD | | |
| 05 | UA | 2'-10" | 6'-8" | EM | F1 | MTL | | UNIT EXT. MECH DOOR |
| 06 | UB | 2'-6" | 6'-8" | MTE | F1 | WD | | |
| 07 | UB | 2'-0" | 6'-8" | MTE | F1 | WD | | |
| 08 | UC | 2'-0" | 6'-8" | MTE | F1 | WD | | LOUVERED AIR HANDLER |
| 09 | UC | 1'-6" | 6'-8" | MTE | F1 | WD | | LOUVERED AIR HANDLER |
| 10 | UB | 1'-6" | 6'-8" | MTE | F1 | WD | | |
| 11 | UB | 1'-4" | 6'-8" | MTE | F1 | WD | | |
| 12 | UDD | 4'-0" | 6'-8" | MTE | | WD | | SLIDING BARN DOOR |
| 13 | UBB | 5'-0" | 6'-8" | MTE | F2 | WD | | DOUBLE SWING DOOR |
| 14 | UCC | 5'-0" | 6'-8" | MTE | F2 | WD | | LOUVERED BI-FOLD |
| 15 | UCC | 6'-0" | 6'-8" | MTE | F2 | WD | | LOUVERED BI-FOLD |
| 19 | UB | 1'-9" | 6'-8" | MTE | F1 | WD | | |
| E | | 3'-0" | 7'-0" | | | | | |
| EE | | 6'-0" | 7'-0" | | | | | |
| F | | 6'-0" | 7'-0" | | | | | *RATED GLASS |

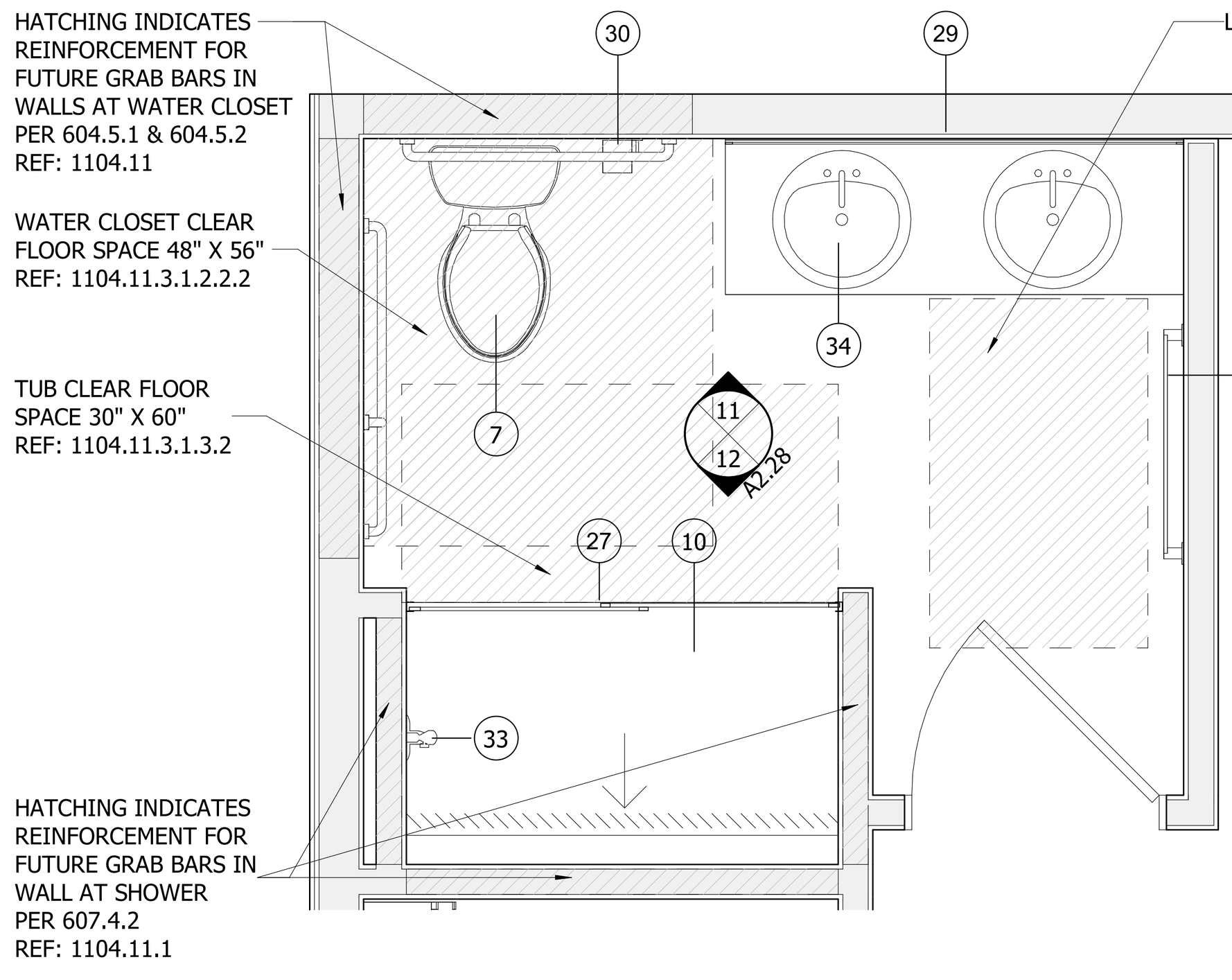


**4 UNIT E(FW-4) - BATHROOM 2 - PLAN**
SCALE : 1/2" = 1'-0"

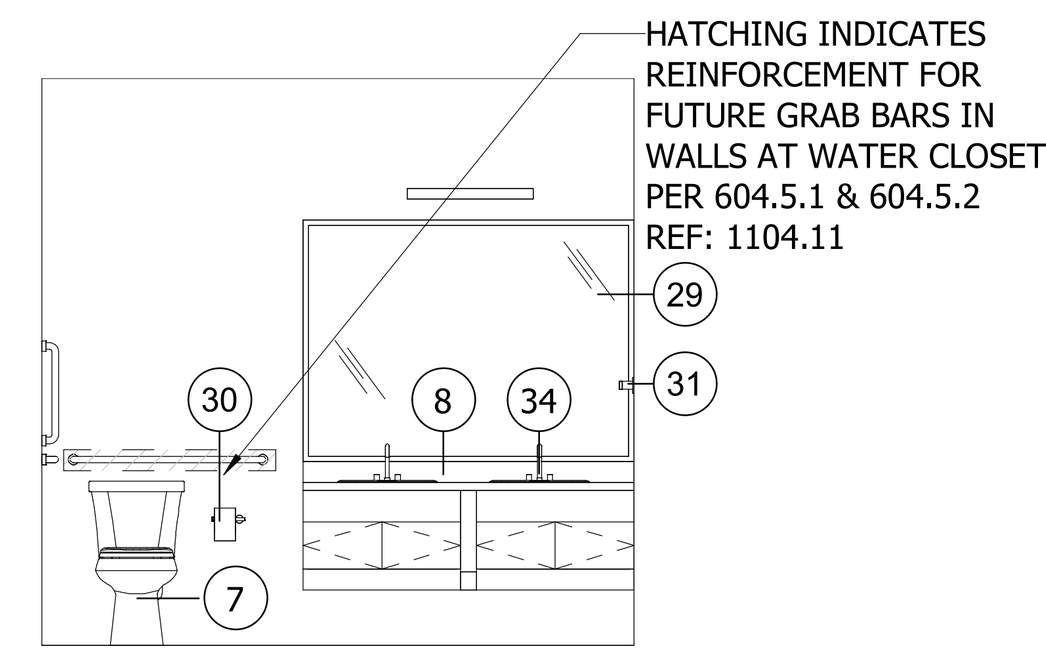


**11 UNIT E(FW4) BATH 2 - 1**
SCALE : 1/4" = 1'-0"

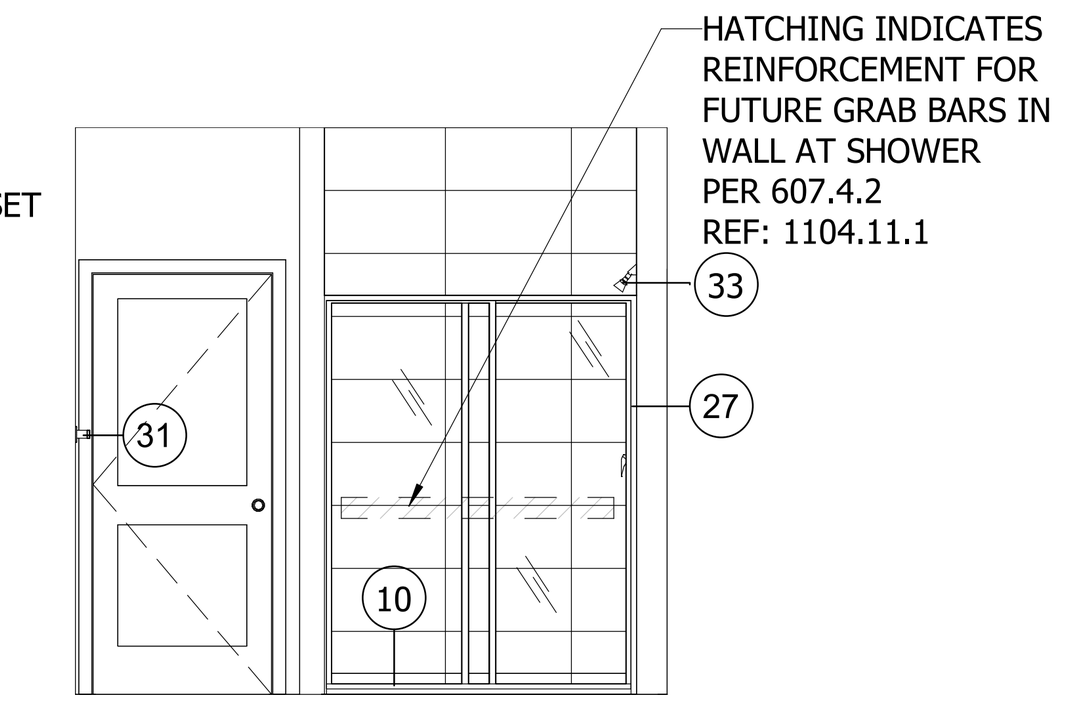


**12 UNIT E(FW4) BATH 2 - 2**
SCALE : 1/4" = 1'-0"

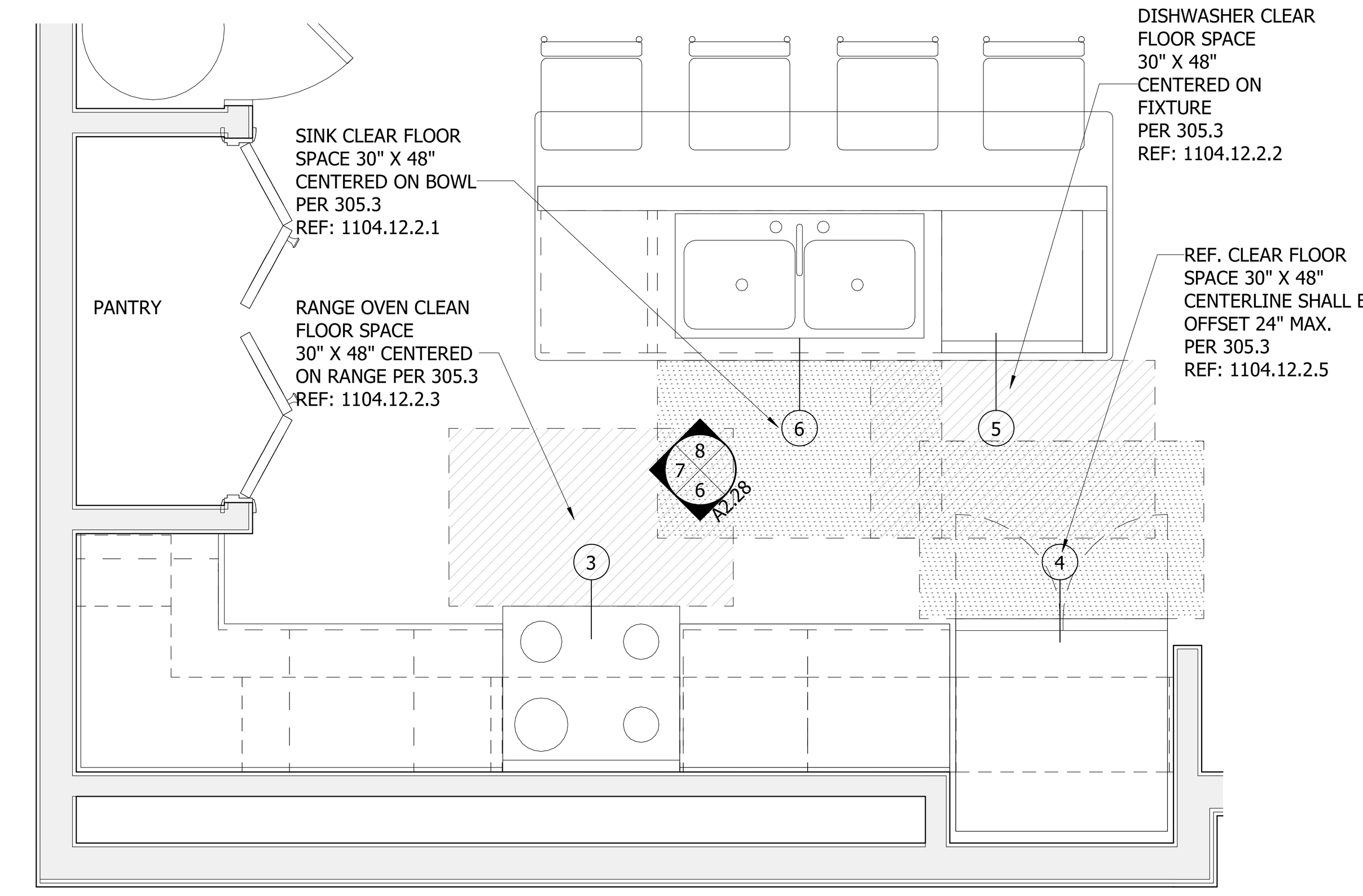


**5 UNIT E(FW-4) - KITCHEN - PLAN**
SCALE : 1/2" = 1'-0"

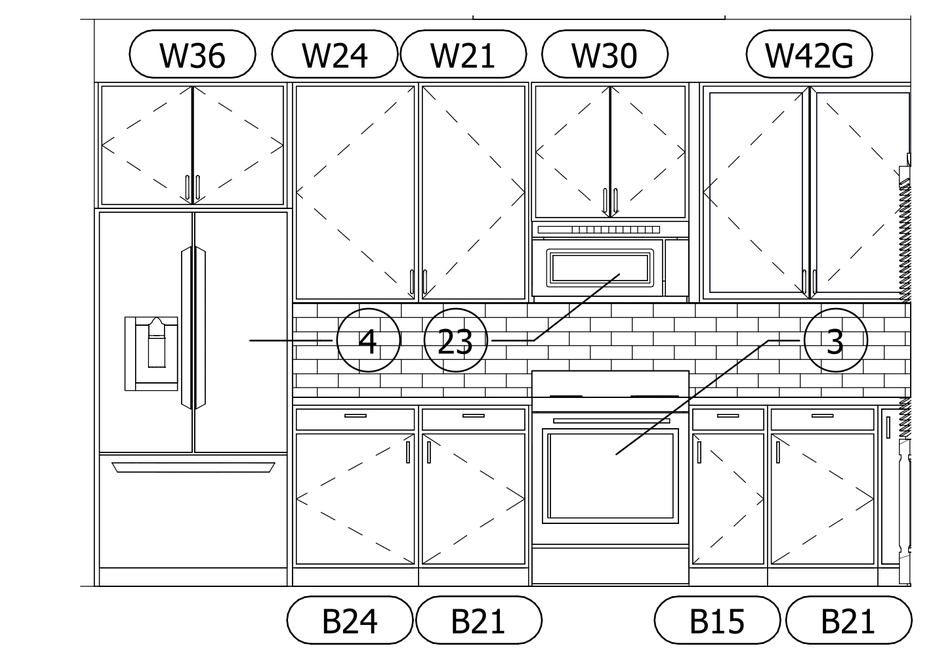


**6 UNIT E(FW4) KITCHEN - 1**
SCALE : 1/4" = 1'-0"

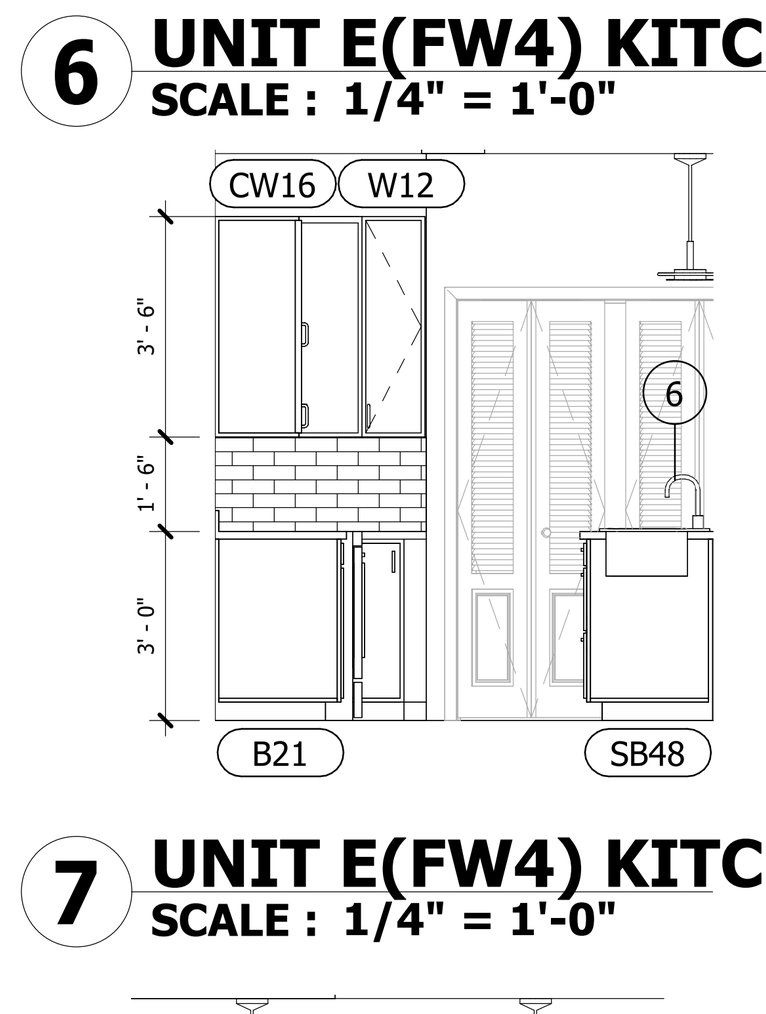


**7 UNIT E(FW4) KITCHEN - 2**
SCALE : 1/4" = 1'-0"

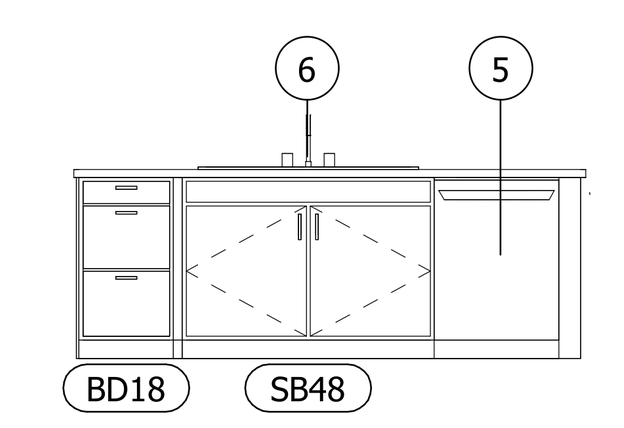


**8 UNIT E(FW4) KITCHEN - 3**
SCALE : 1/4" = 1'-0"

## UNIT DOOR TYPES

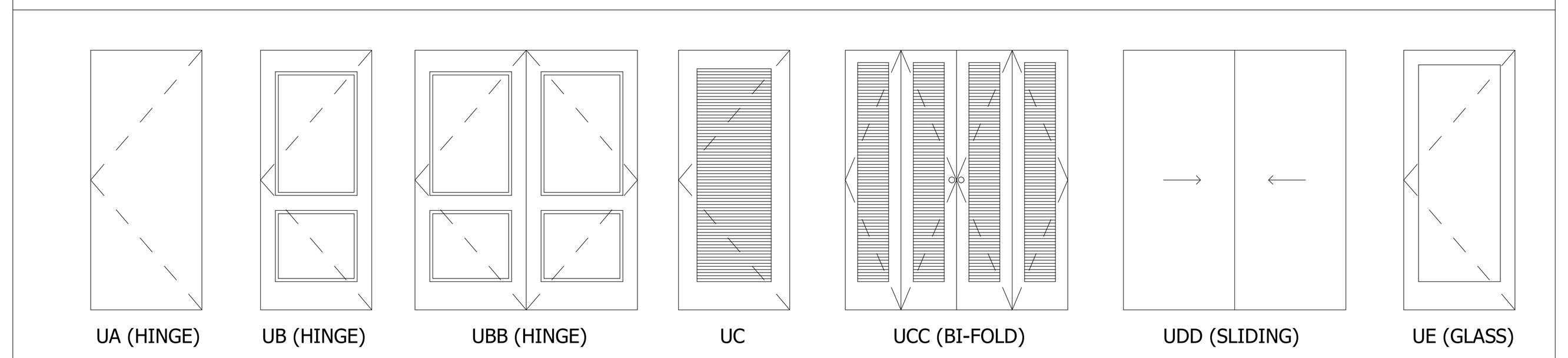


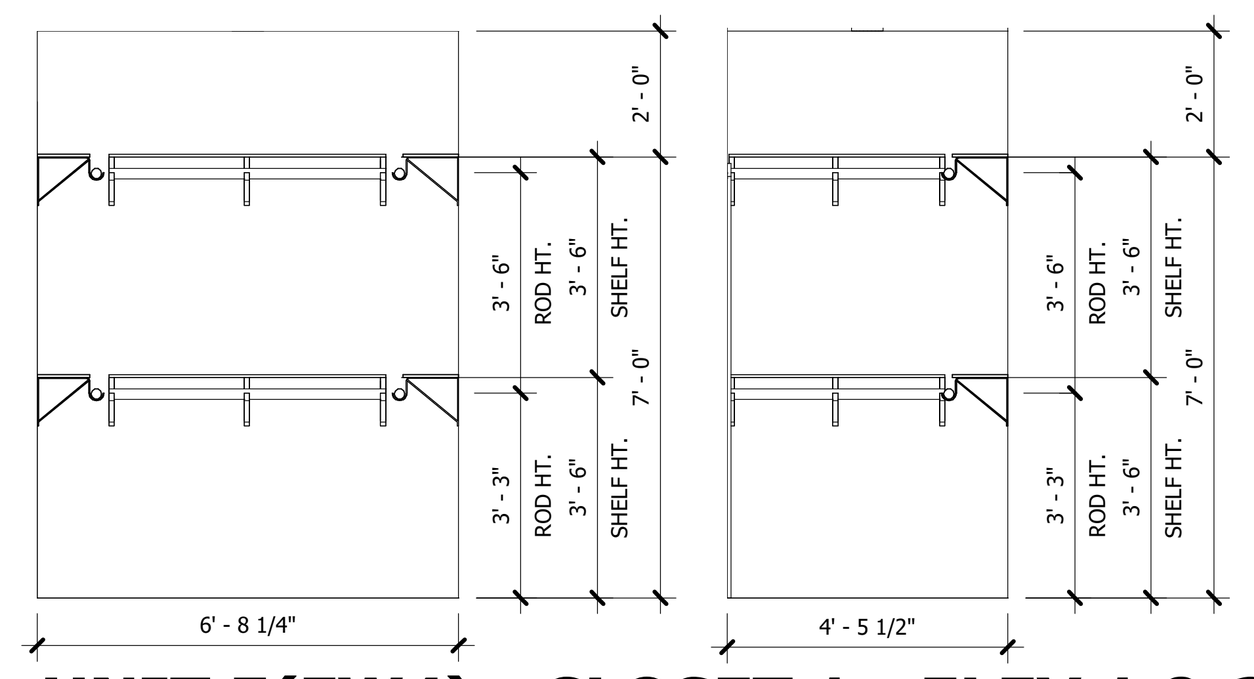

**15 UNIT E(FW4) - CLOSET 1 - ELEV 1 & 2**
SCALE : 1/4" = 1'-0"

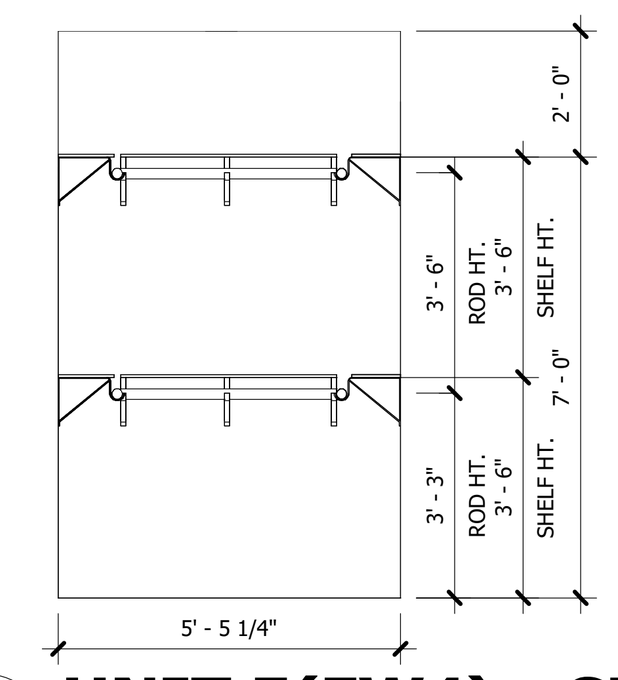

**17 UNIT E(FW4) - CLOSET 2 - 1**
SCALE : 1/4" = 1'-0"

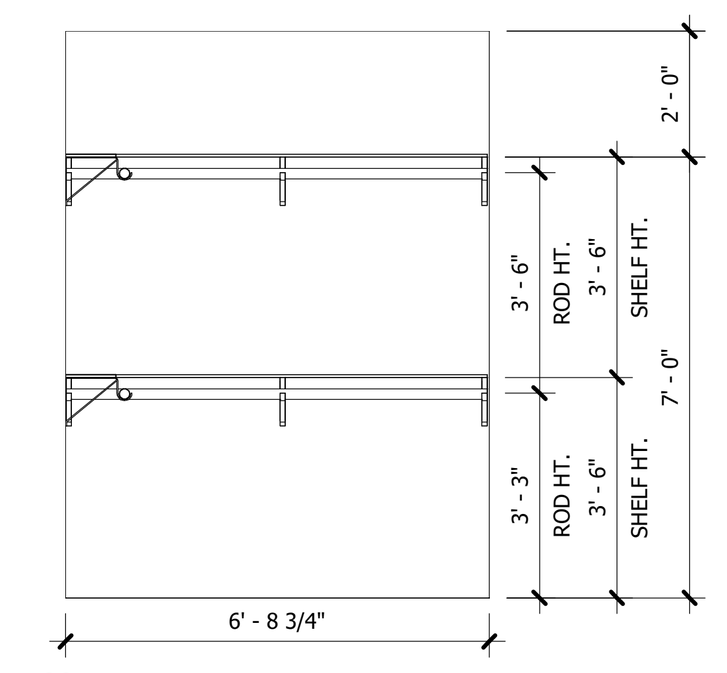

**18 UNIT E(FW4) - CLOSET 2 - 2**
SCALE : 1/4" = 1'-0"

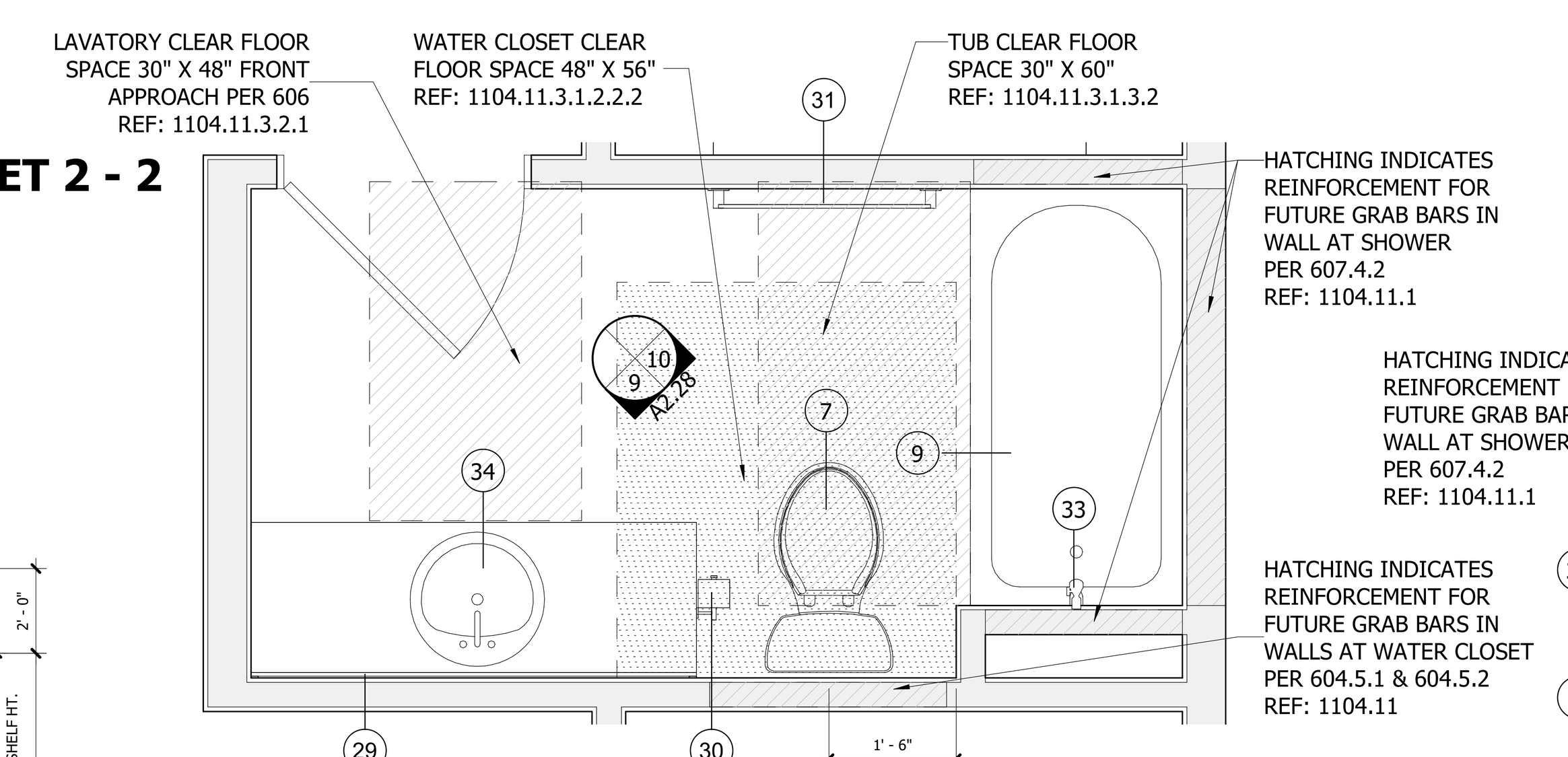


**3 UNIT E(FW-4) - BATHROOM 1 - PLAN**
SCALE : 1/2" = 1'-0"

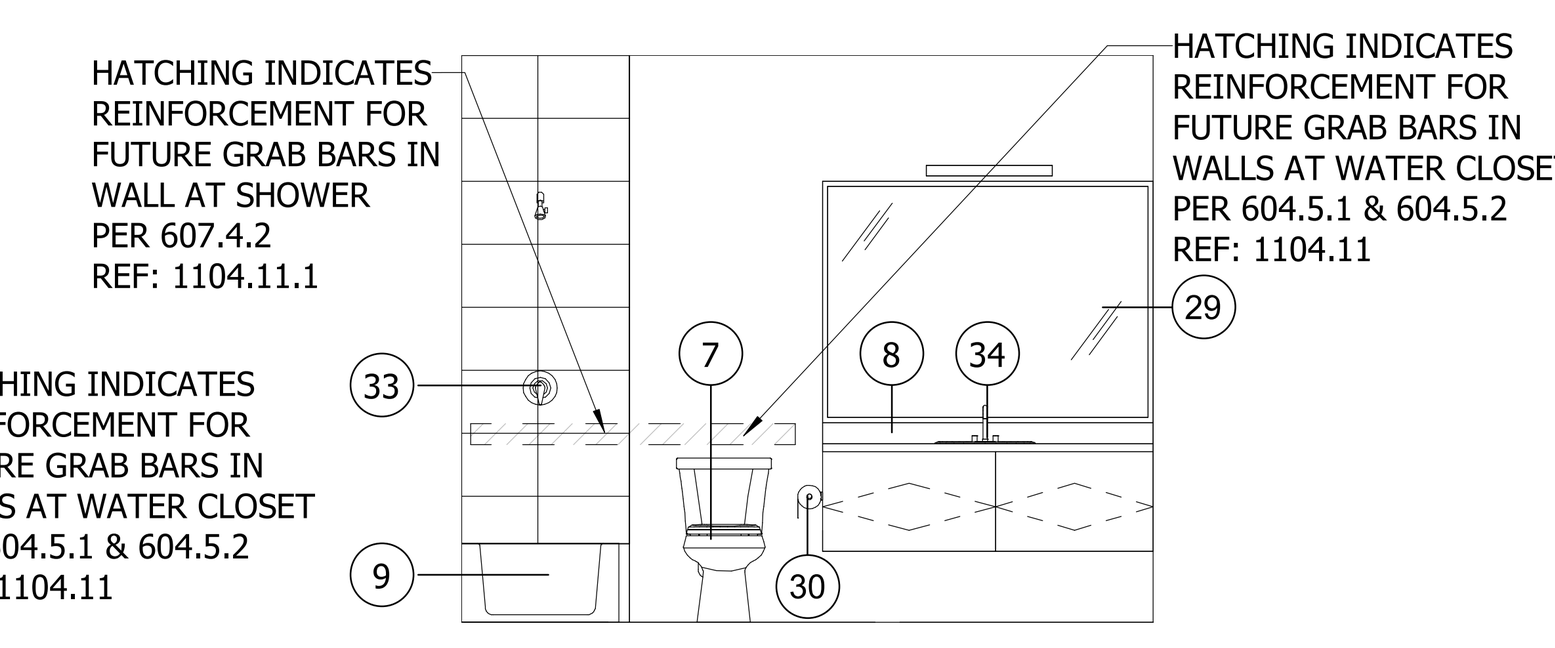


**9 UNIT E(FW4) BATH 1 - 1**
SCALE : 1/4" = 1'-0"

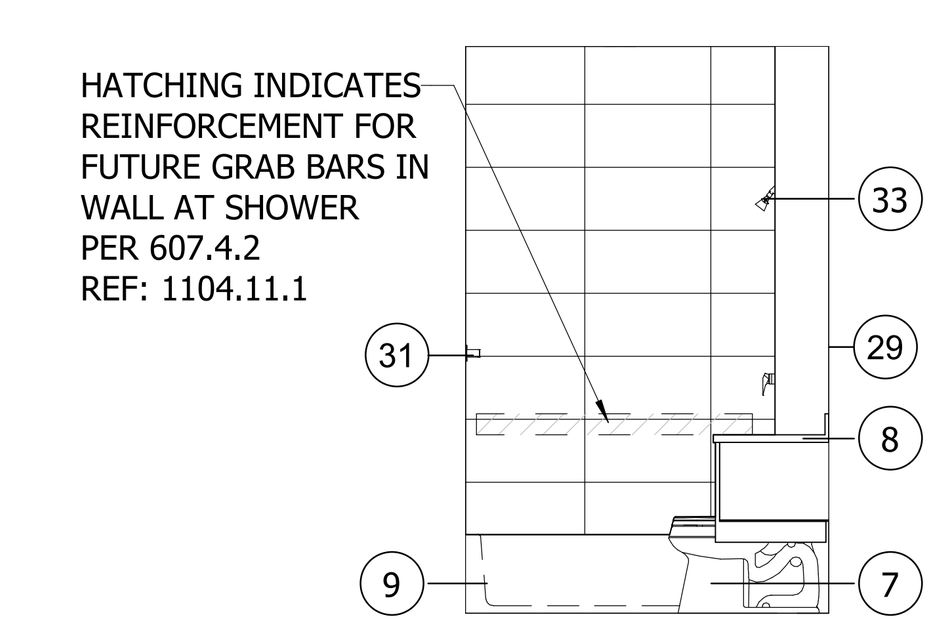


**10 UNIT E(FW4) BATH 1 - 2**
SCALE : 1/4" = 1'-0"

## FRAME TYPES

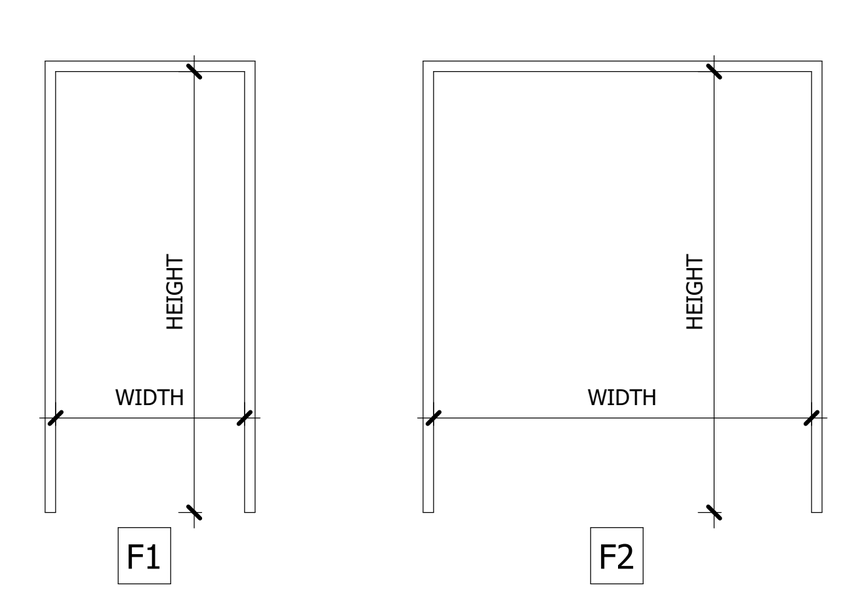


**DOOR/FRAME MATERIAL KEY:**

| | |
|---|---|
| AL | ALUMINUM |
| EM | EXTERIOR METAL |
| GL | GLASS |
| HC | HOLLOW CORE |
| HM | HOLLOW METAL |
| MTL | METAL |
| SC | SOLID CORE |
| SR | STILE & RAIL |
| VY | VINYL |
| WD | WOOD |
| MTE | MASONITE |

**NOTES:**

1. SEE SPECIFICATIONS FOR ADDITIONAL INFORMATION.
2. ALL DOOR HARDWARE TO BE COMPLIANT WITH THE FEDERAL FAIR HOUSING ACT (FHA).
3. DOORS SHALL BE OPENABLE WITH NO MORE THAN ONE RELEASING OPERATION.
4. PROVIDE ACCESSIBLE THRESHOLDS AT ALL DOORS.
5. ALL UNITS ARE ADAPTABLE PER FHA. SEE SHEET A0.06 FOR ADDITIONAL INFORMATION.
6. ALL DIMENSIONS ARE TO ROUGH FRAMING U.N.O.
7. ALL WALLS ARE 2X4 STUDS UNLESS NOTED OTHERWISE.
8. ALL TENANT SEPERATIONS AND CORRIDOR WALLS ARE 2X6 UNLESS NOTED OTHERWISE.
9. PATIO AT FIRST FLOOR 4" BELOW UNIT FINISH FLOOR.
10. BALCONIES ARE FLUSH WITH GYPCRETE TOPPING. SEE DETAIL.
11. ALL TOILETS SET ON NEOPRENE GASKET WITH INSULATED PIPE TRAP.
12. ALL KITCHEN APPLIANCES TO HAVE STAINLESS STEEL FRONTS.
13. WHERE DRAWINGS ARE IN CONFLICT WITH OTHER DRAWINGS, CONTRACTOR SHALL NOTIFY THE ARCHITECT.
14. PROVIDE BLOCKING FOR GRAB BARS IN ALL BATHROOMS
15. DIMENSION TO STUD UNLESS OTHERWISE NOTED
16. DIMESNION TO FINISH @ CABINETS
17. PROVIDE BLOCKING FOR TV WALL MOUNT, CENTER AT 60" A.F.F.
18. ALL BATHROOM VANITES ARE 21" IN DEPTH

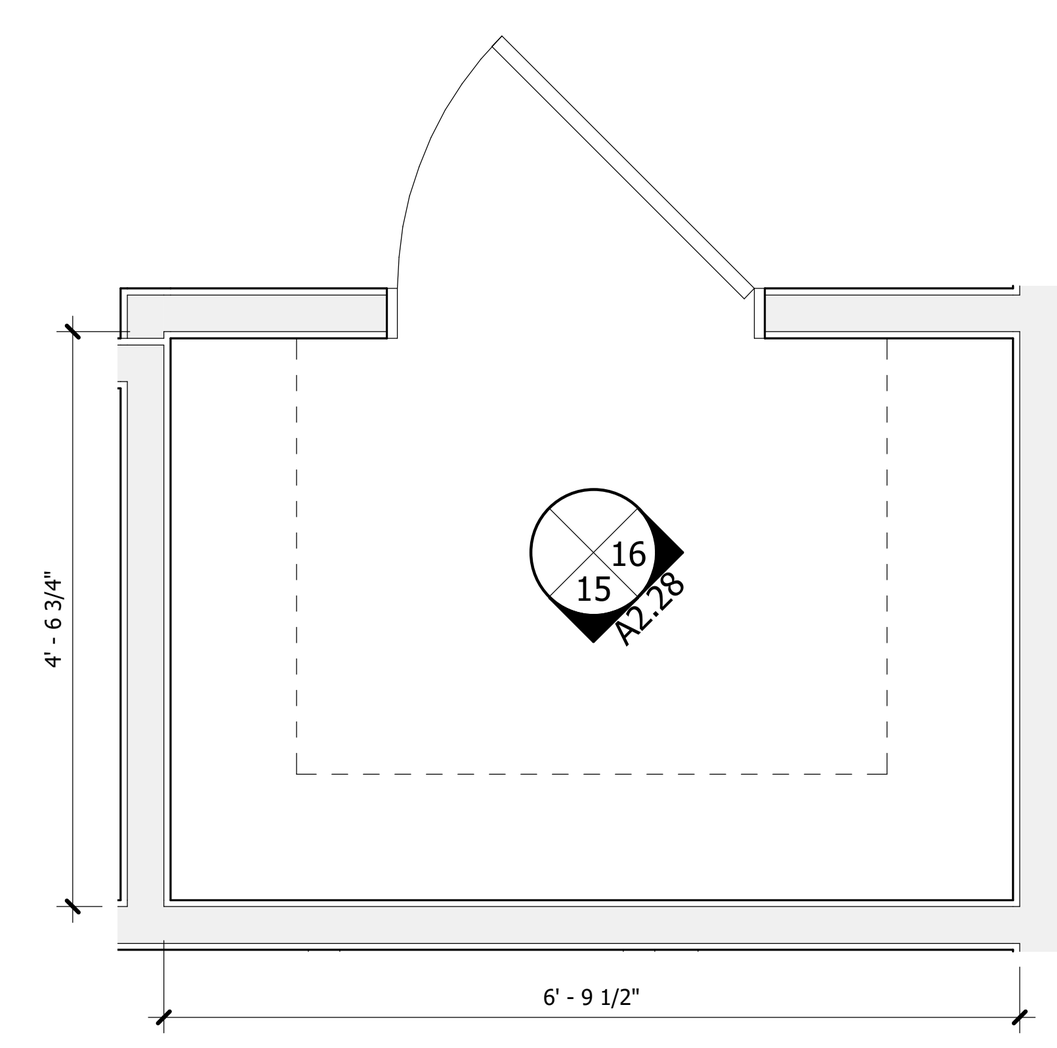

**13 UNIT E(FW4) - CLOSET 1 - PLAN**
SCALE : 1/2" = 1'-0"

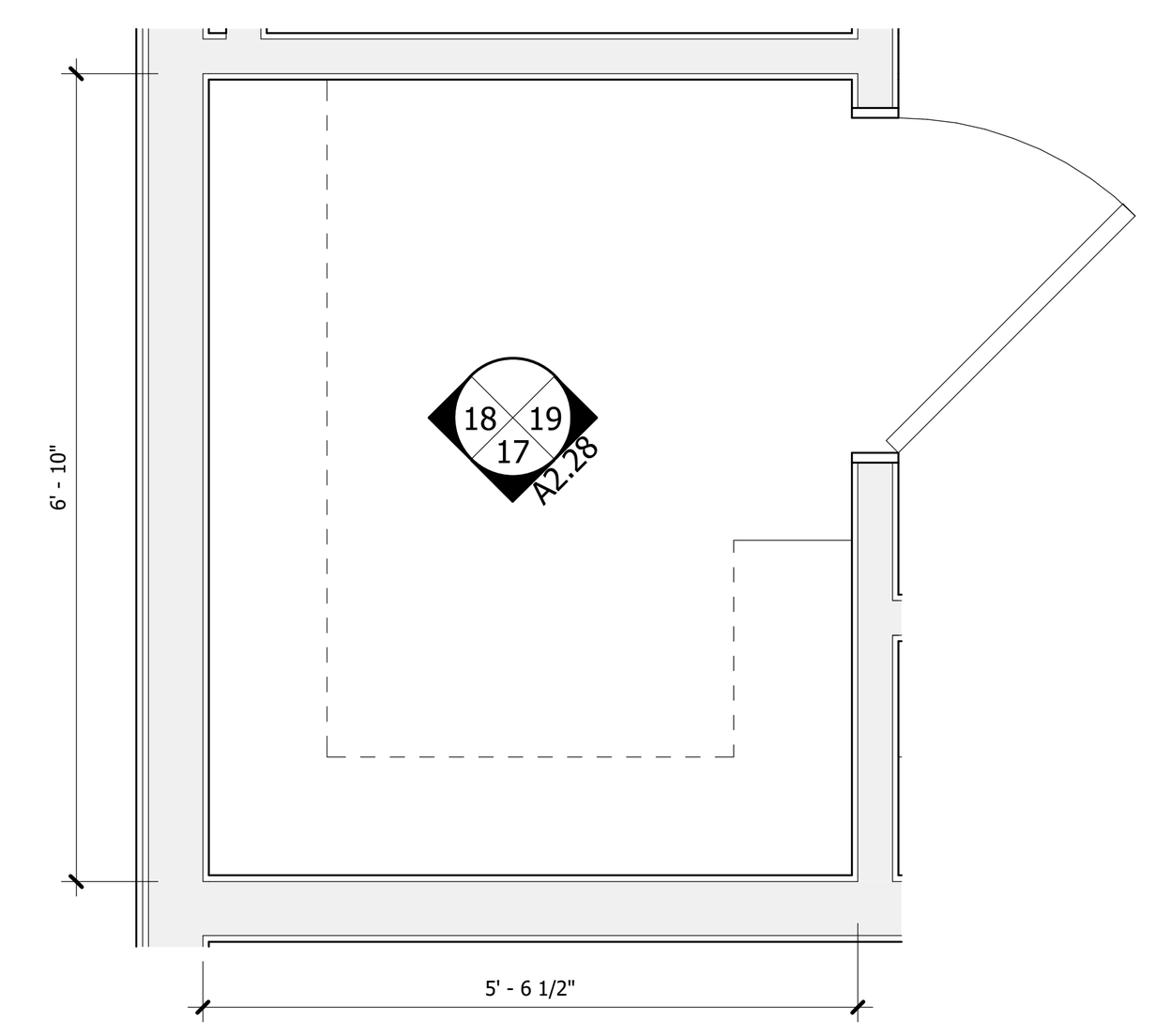

**14 UNIT E(FW4) - CLOSET 2 - PLAN**
SCALE : 1/2" = 1'-0"

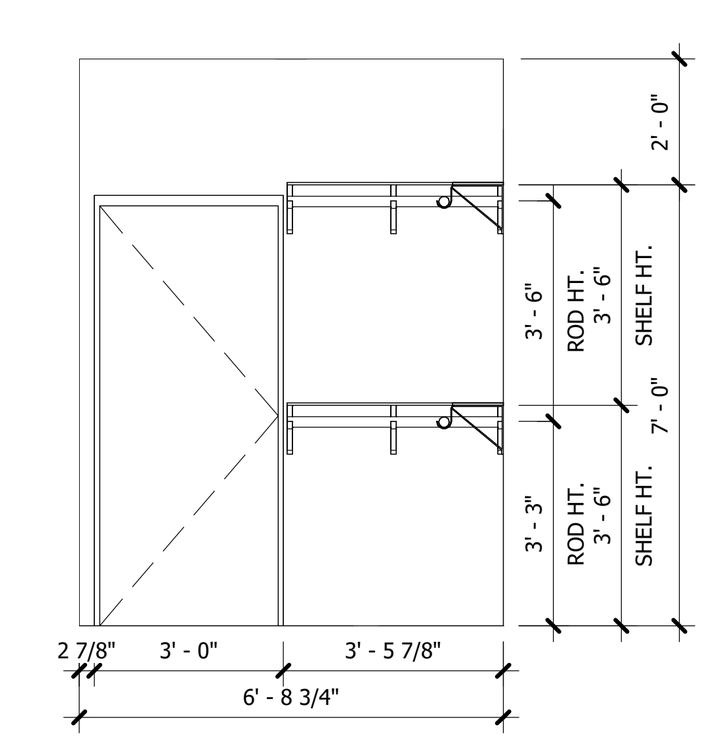

**19 UNIT E(FW4) - CLOSET 2 - 3**
SCALE : 1/4" = 1'-0"

| LIGHT FIXTURE LEGEND | |
|---|---|
| U1 | LITHONIA FMSATL-16-20840-BN; SEMI FLUSH MOUNT |
| U2 | LITHONIA FMFL-30840-SATL-BN; LINEAR FLUSH MOUNT |
| U3 | LITHONIA DFMADRL-14-F01; FMPANL-14-20840M6; LED SURFACE MOUNT DRUM |
| U4 | SATCO COVER PLATE |
| U5 | PROGRESS P300187-009-30; LED BATH VANITY |
| U6 | LITHONIA FMMUSL-9-14840-WH; LED CLOSET MUSHROOM |
| U7 | LITHONIA MDPC-BNP-M6; DGDT 1003 M6 |
| U8 | COOPER SMD6R-12-930-WH; 1200 LUMEN SLIM SURFACE (120 VOLT ONLY) |
| U9 | NUVO 62-1161; 7" LED FLUSH MOUNT DISCK |
| U10 | LITHONIA OLWPLED-P1-40K-120-PE-BZ; LED MINI WALL PACK |

| WINDOW SCHEDULE | | | | | |
|---|---|---|---|---|---|
| MARK | WIDTH | HEIGHT | WINDOW TYPE | CONSTRUCTION TYPE | COMMENTS |
| A | 3'-0" | 6'-0" | SINGLE HUNG | VINYL | All windows to be provided with opening limiters. See specifications. |
| B | 6'-3 1/2" | 6'-0" | SINGLE HUNG | VINYL | All windows to be provided with opening limiters. See specifications. |

| UNIT PLAN AND INTERIOR ELEVATION KEYNOTES | |
|---|---|
| Number | Description |
| 1 | WASHER |
| 2 | DRYER |
| 3 | RANGE / OVEN |
| 4 | REFRIGERATOR |
| 5 | DISHWASHER |
| 6 | KITCHEN SINK / FAUCET |
| 7 | TOILET |
| 8 | VANITY - SEE ELEVATION FOR SIZE |
| 9 | 30"X60" TUB |
| 10 | 36"X60" SHOWER BASE |
| 11 | 32"X60" SHOWER BASE |
| 12 | ACCESSIBLE THRESHOLD - MARBLE |
| 13 | ACCESSIBLE THRESHOLD - ALUMINIUM |
| 14 | SOFFIT OVER REFRIGERATOR AND BEHIND CABINET |
| 15 | LINEN SHELVES (5) PER SPECIFICATION |
| 16 | WIRE SHEVLING |
| 17 | KNEE WALL BELOW COUNTERTOP |
| 18 | BALCONY RAILING @ 42" HIGH |
| 19 | WALL MOUNTED HOT WATER HEATER |
| 20 | HVAC UNIT MOUNTED ON WALL |
| 21 | PRE ROCK BEHIND BATHING FIXTURES |
| 22 | CUBBIE CABINETS |
| 23 | MICROWAVE WITH RECIRCULATION HOOD |
| 24 | WALL TILE BETWEEN CONTERTOP AND WALL CABINET. SEE 1D DRAWING |
| 25 | BLOCKING FOR GRAB BAR. SEE FIG. 4- SHEET A0.06 |
| 26 | 24" HORIZONTAL GRAB BAR @ TUB BACK WALL. SEE FIG. 4 - SHEET A0.06 |
| 27 | SHOWER ROD |
| 28 | NOT USED |
| 29 | PAINTED FRAME MIRROR |
| 30 | TOILET TISSUE HOLDER @ 26" A.F.F. |
| 31 | 30" TOWEL BAR |
| 32 | ROBE HOOK |
| 33 | SHOWER HEAD |
| 34 | VANITY SINK BOWL |

| ROOM FINISH MATERIAL CODE | |
|---|---|
| CPT | CARPET |
| CT | CERAMIC TILE |
| CONC | CONCRETE |
| GWB | GYPSUM WALL BOARD |
| MR GWB | MOISTURE RESISTANT GWB |
| V | SHEET VINYL |
| VWP | VINYL WOOD PLANK |
| VCT | VINYL COMPOSITE TILE |
| WD | WOOD |

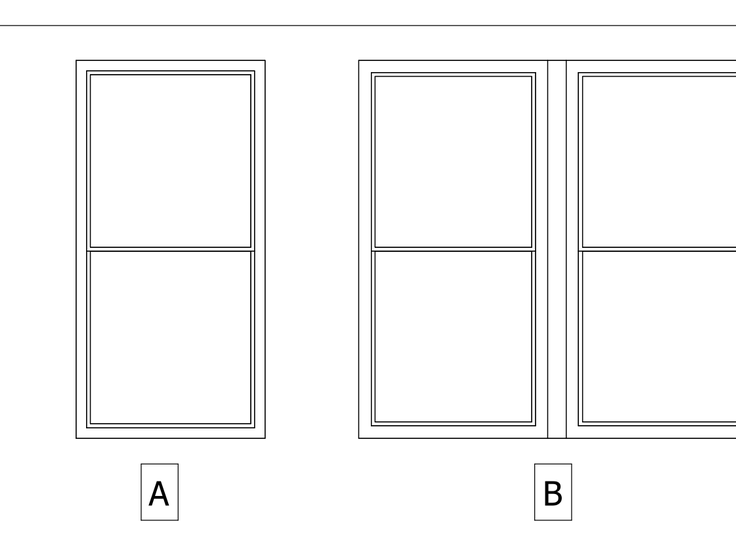


NOTE: (2) 2X6 FRT STUDS PROVIDED BETWEEN GROUP WINDOWS. (TYPICAL) PROVIDE 4" LIMITATION FOR WINDOW LIMITERS ON ALL WINDOWS

## ROOM FINISH SCHEDULE

| SPACE | FLOOR | WALL | CEILING | HEIGHT | REMARKS |
|---|---|---|---|---|---|
| KITCHEN | 3 | A | 1 | 9'-0" | |
| LIVING RM. | 3 | A | 1 | 9'-0" | |
| BEDROOMS | 1 | A | 1 | 9'-0" | |
| DEN | 3 | A | 1 | 9'-0" | |
| BATHS | 4 | B/C | 2 | 9'-0" | |
| CLOSETS | | A | 1 | 9'-0" | FLOORING: MATCH ADJ. |
| LAUNDRY | 3 | A | 2 | 9'-0" | FLOORING: MATCH ADJ. |
| UNIT-HVAC | | A | 1 | 9'-0" | FL.: GYPCRETE PAINT-LIGHT GRAY |

### MATERIAL CODE

| FLR. / BASE | | WALL | | CEILING | |
|---|---|---|---|---|---|
| 1 | CPT / WD | A | G.W.B. | 1 | G.W.B. |
| 2 | | B | MR.G.W.B. | 2 | MR.G.W.B. |
| 3 | LVT / WD | C | CT-2 | 3 | |
| 4 | CT / CT | D | | 4 | |
| 5 | | E | | 5 | |
| 6 | | F | | 6 | |
| 7 | | G | | 7 | |
| 8 | | H | | 8 | |

MATERIAL GLOSSARY

| | |
|---|---|
| CPT | CARPET - SHAW GULF WINDS - COLOR: 532 MINERAL |
| CT-1 | CERAMIC TILE - 12X24 FLORIM MATERIA - COLOR: HONED 02 |
| CT-2 | CERAMIC TILE - 12X24 FLORIM MATERIA - COLOR: STONE CALACATTA |
| G.W.B. | GYPSUM WALL BOARD |
| MR.G.W.B. | MOISTURE RESISTANT G.W.B. |
| LVT | VINYL WOOD PLANK - SHAW TERRAIN 12 MIL - COLOR: 766 ECHO |
| WD. | WOOD |

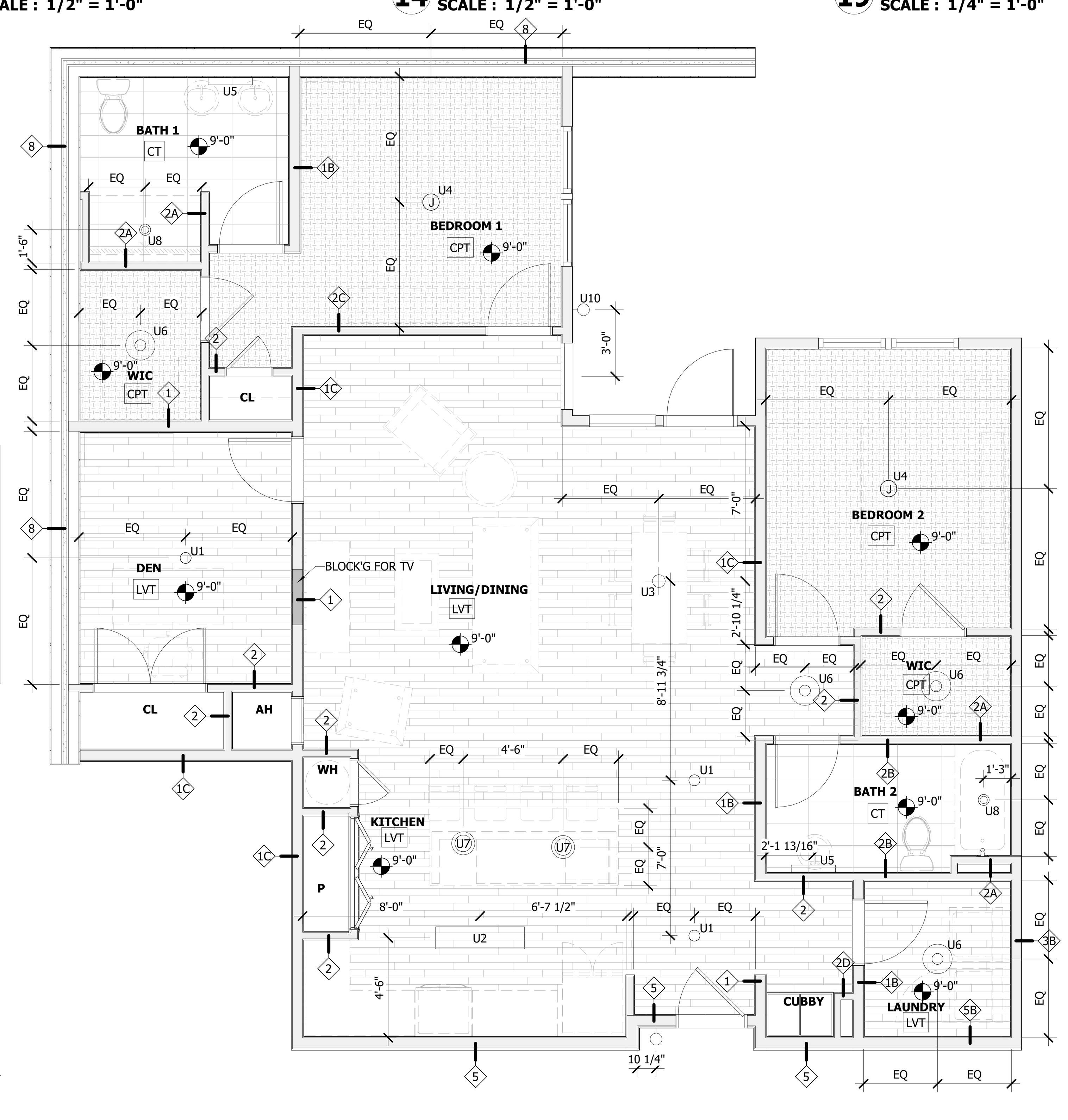


**2 UNIT E-FW4 RCP**
SCALE : 1/4" = 1'-0"

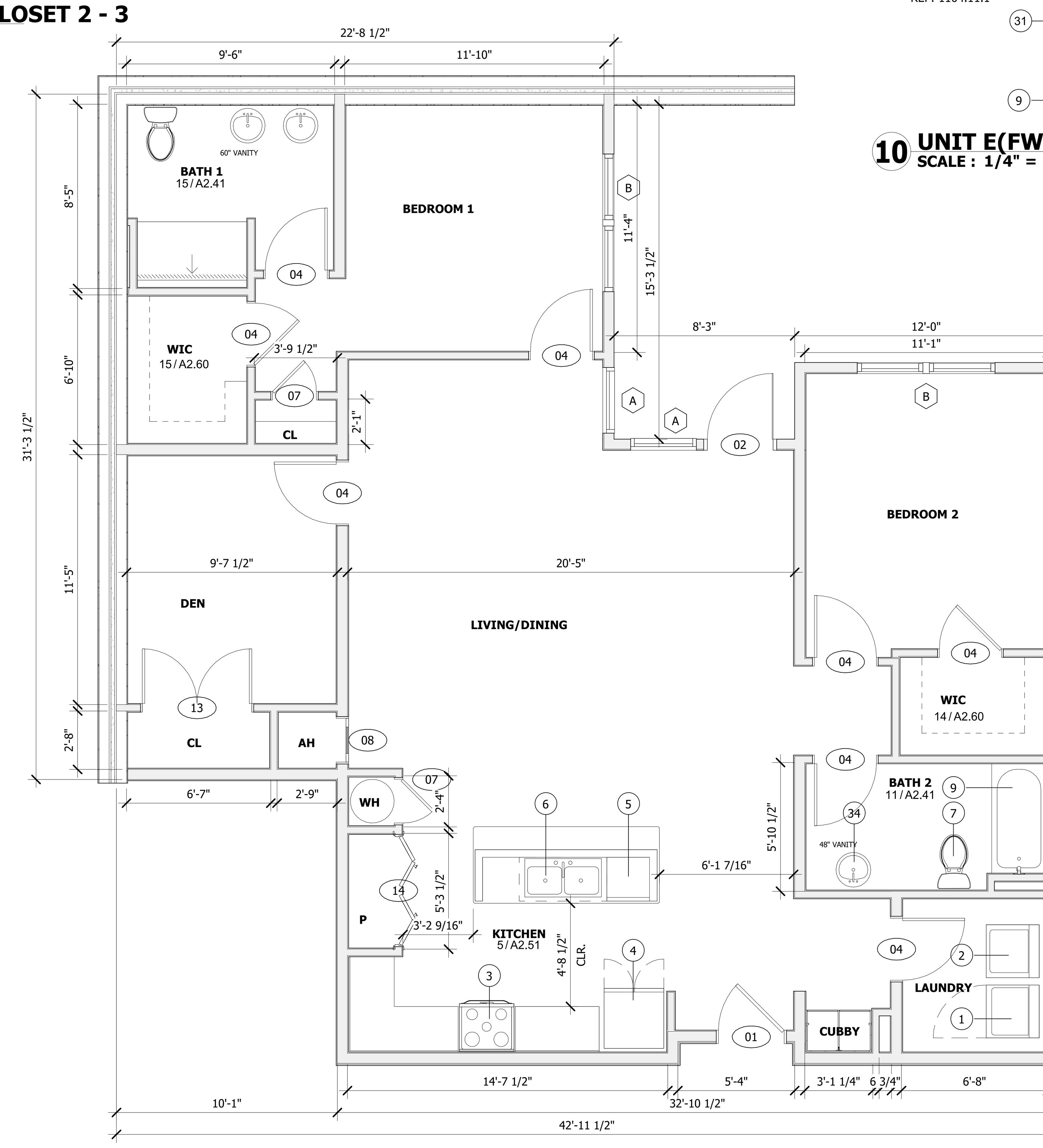


| ROOM # |
|---|
| UNIT E FW4 |
| 137 |
| 237 |
| 337 |
| 437 |
| Grand total: 4 |

**1 UNIT - E (FW-4)**
SCALE : 1/4" = 1'-0"

ALL REPORTS, PLANS, SPECIFICATIONS AND COMPUTER FILES RELATING TO THIS PROJECT ARE THE PROPERTY OF THE MARTIN ARCHITECTURAL GROUP. THE MARTIN ARCHITECTURAL GROUP RETAINS ALL COMMON LAW, STATUTE AND OTHER RESERVED RIGHTS INCLUDING THE COPYRIGHT THERETO. REPRODUCTION OF THE MATERIAL HEREIN OR SUBSTANTIAL USE WITHOUT WRITTEN PERMISSION OF THE MARTIN ARCHITECTURAL GROUP VIOLATES THE COPYRIGHT LAWS OF THE UNITED STATES AND WILL BE SUBJECT TO LEGAL PROSECUTION.
©2022, The Martin Architectural Group, P.C.




THE MARTIN ARCHITECTURAL GROUP, P.C.
ARCHITECTS AND LAND PLANNERS
A PROFESSIONAL CORPORATION
240 NORTH 22ND STREET, PHILADELPHIA, PA, 19103
P (215) 665-1080 F (215) 561-5064

| | |
|---|---|
| P.A.: | DREW ROMANIC |
| P.M.: | JASON DECAMPLI |
| DRAWN BY: | Author |
| PROJECT NO: | 1362-12 |

| NO. | REVISION | DATE |
|---|---|---|
| 1 | PERMIT SET | 12/20/22 |

# UNIT PLANS (E-FW4)
## Granite Run Apartment 02
MIDDLETOWN TOWNSHIP, PA

| | |
|---|---|
| SCALE: | |
| DATE: | 11/18/22 |

# A2.28

©2022, The Martin Architectural Group, P.C.

Printed: 1/13/2023 4:32:48 PM

## DOOR SCHEDULE - DWELLING UNIT

| MARK | DOOR TYPE | WIDTH | HEIGHT | DOOR MATERIAL | FRAME TYPE | FRAME MATERIAL | FIRE RATING | REMARKS |
|---|---|---|---|---|---|---|---|---|
| 01 | UA | 3'-0" | 7'-0" | MTL | F1 | MTL | 20 min. | UNIT ENTRY - SPRING HINGES |
| 02 | UE | 3'-0" | 7'-0" | VY | F1 | VY | | BALCONY DOOR |
| 03 | UB | 3'-0" | 6'-8" | MTE | F1 | WD | | |
| 04 | UB | 2'-10" | 6'-8" | MTE | F1 | WD | | |
| 05 | UA | 2'-10" | 6'-8" | EM | F1 | MTL | | UNIT EXT. MECH DOOR |
| 06 | UB | 2'-6" | 6'-8" | MTE | F1 | WD | | |
| 07 | UB | 2'-0" | 6'-8" | MTE | F1 | WD | | |
| 08 | UC | 2'-0" | 6'-8" | MTE | F1 | WD | | LOUVERED AIR HANDLER |
| 09 | UC | 1'-6" | 6'-8" | MTE | F1 | WD | | LOUVERED AIR HANDLER |
| 10 | UB | 1'-6" | 6'-8" | MTE | F1 | WD | | |
| 11 | UB | 1'-4" | 6'-8" | MTE | F1 | WD | | |
| 12 | UDD | 4'-0" | 6'-8" | MTE | | WD | | SLIDING BARN DOOR |
| 13 | UBB | 5'-0" | 6'-8" | MTE | F2 | WD | | DOUBLE SWING DOOR |
| 14 | UCC | 5'-0" | 6'-8" | MTE | F2 | WD | | LOUVERED BI-FOLD |
| 15 | UCC | 6'-0" | 6'-8" | MTE | F2 | WD | | LOUVERED BI-FOLD |
| 19 | UB | 1'-9" | 6'-8" | MTE | F1 | WD | | |
| E | | 3'-0" | 7'-0" | | | | | |
| EE | | 6'-0" | 7'-0" | | | | | |
| F | | 6'-0" | 7'-0" | | | | | *RATED GLASS |

## UNIT DOOR TYPES

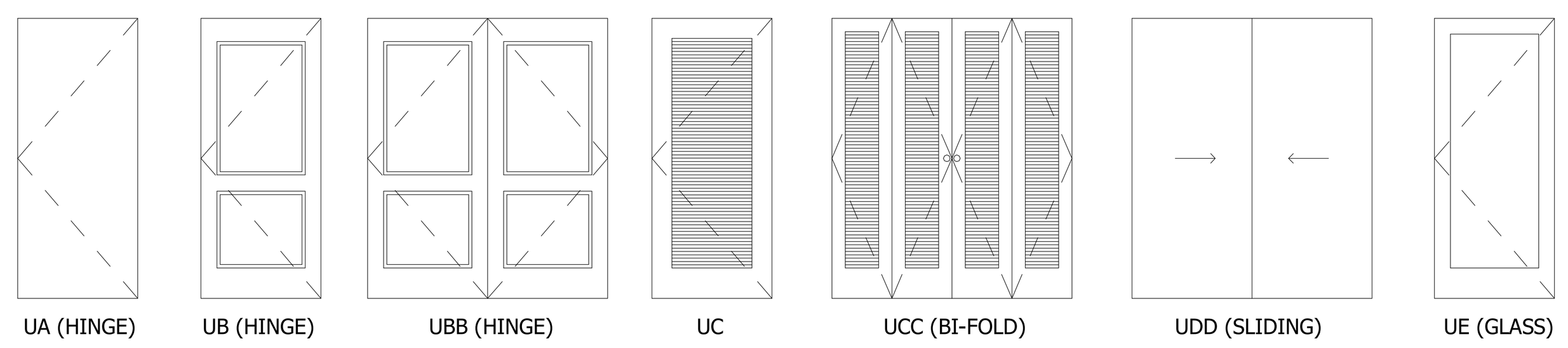


## FRAME TYPES

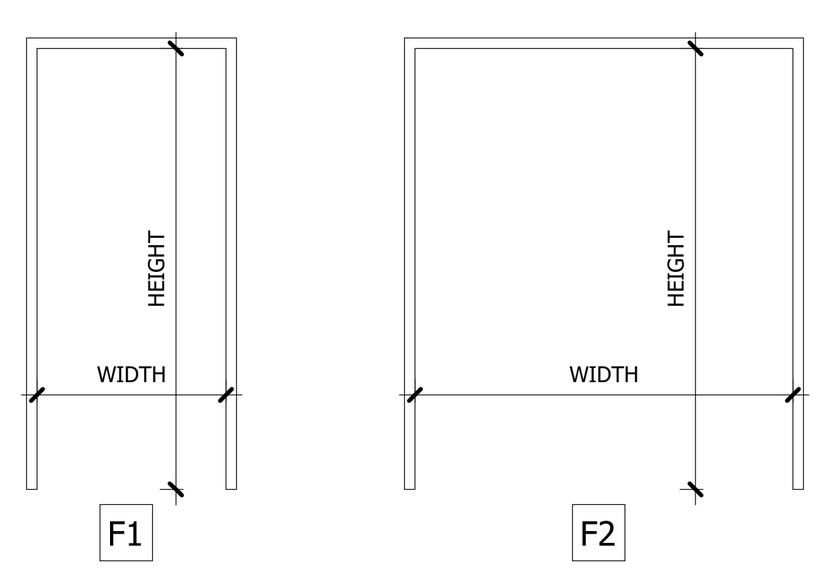


**DOOR/FRAME MATERIAL KEY:**

AL ALUMINUM
EM EXTERIOR METAL
GL GLASS
HC HOLLOW CORE
HM HOLLOW METAL
MTL METAL
SC SOLID CORE
SR STILE & RAIL
VY VINYL
WD WOOD
MTE MASONITE

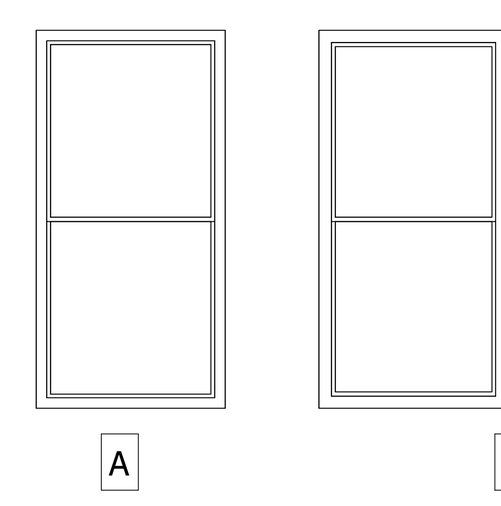


NOTE: (2) 2X6 FRT STUDS PROVIDED BETWEEN GROUP WINDOWS. (TYPICAL)
PROVIDE 4" LIMITATION FOR WINDOW LIMITERS ON ALL WINDOWS

## WINDOW SCHEDULE

| MARK | WIDTH | HEIGHT | WINDOW TYPE | CONSTRUCTI ON TYPE | COMMENTS |
|---|---|---|---|---|---|
| A | 3'-0" | 6'-0" | SINGLE HUNG | VINYL | All windows to be provided with opening limiters. See specifications. |
| B | 6'-3 1/2" | 6'-0" | SINGLE HUNG | VINYL | All windows to be provided with opening limiters. See specifications. |

## LIGHT FIXTURE LEGEND

| | |
|---|---|
| U1 | LITHONIA FMSATL-16-20840-BN; SEMI FLUSH MOUNT |
| U2 | LITHONIA FMFL-30840-SATL-BN; LINEAR FLUSH MOUNT |
| U3 | LITHONIA DFMADRL-14-F01; FMPANL-14-20840M6; LED SURFACE MOUNT DRUM |
| U4 | SATCO COVER PLATE |
| U5 | PROGRESS P300187-009-30; LED BATH VANITY |
| U6 | LITHONIA FMMUSL-9-14840-WH; LED CLOSET MUSHROOM |
| U7 | LITHONIA MDPC-BNP-M6; DGDT 1003 M6 |
| U8 | COOPER SMD6R-12-930-WH; 1200 LUMEN SLIM SURFACE (120 VOLT ONLY) |
| U9 | NUVO 62-1161; 7" LED FLUSH MOUNT DISCK |
| U10 | LITHONIA OLWPLED-P1-40K-120-PE-BZ; LED MINI WALL PACK |

## UNIT PLAN AND INTERIOR ELEVATION KEYNOTES

| Number | Description |
|---|---|
| 1 | WASHER |
| 2 | DRYER |
| 3 | RANGE / OVEN |
| 4 | REFRIGERATOR |
| 5 | DISHWASHER |
| 6 | KITCHEN SINK / FAUCET |
| 7 | TOILET |
| 8 | VANITY - SEE ELEVATION FOR SIZE |
| 9 | 30"X60" TUB |
| 10 | 36"X60" SHOWER BASE |
| 11 | 32"X60" SHOWER BASE |
| 12 | ACCESSIBLE THRESHOLD - MARBLE |
| 13 | ACCESSIBLE THRESHOLD - ALUMINIUM |
| 14 | SOFFIT OVER REFRIGERATOR AND BEHIND CABINET |
| 15 | LINEN SHELVES (5) PER SPECIFICATION |
| 16 | WIRE SHEVLING |
| 17 | KNEE WALL BELOW COUNTERTOP |
| 18 | BALCONY RAILING @ 42" HIGH |
| 19 | WALL MOUNTED HOT WATER HEATER |
| 20 | HVAC UNIT MOUNTED ON WALL |
| 21 | PRE ROCK BEHIND BATHING FIXTURES |
| 22 | CUBBIE CABINETS |
| 23 | MICROWAVE WITH RECIRCULATION HOOD |
| 24 | WALL TILE BETWEEN CONTERTOP AND WALL CABINET. SEE 1D DRAWING |
| 25 | BLOCKING FOR GRAB BAR. SEE FIG. 4- SHEET A0.06 |
| 26 | 24" HORIZONTAL GRAB BAR @ TUB BACK WALL. SEE FIG. 4 - SHEET A0.06 |
| 27 | SHOWER ROD |
| 28 | NOT USED |
| 29 | PAINTED FRAME MIRROR |
| 30 | TOILET TISSUE HOLDER @ 26" A.F.F. |
| 31 | 30" TOWEL BAR |
| 32 | ROBE HOOK |
| 33 | SHOWER HEAD |
| 34 | VANITY SINK BOWL |

## ROOM FINISH MATERIAL CODE

| | |
|---|---|
| CPT | CARPET |
| CT | CERAMIC TILE |
| CONC | CONCRETE |
| GWB | GYPSUM WALL BOARD |
| MR GWB | MOISTURE RESISTANT GWB |
| V | SHEET VINYL |
| VWP | VINYL WOOD PLANK |
| VCT | VINYL COMPOSITE TILE |
| WD | WOOD |

**NOTES:**

1. SEE SPECIFICATIONS FOR ADDITIONAL INFORMATION.
2. ALL DOOR HARDWARE TO BE COMPLIANT WITH THE FEDERAL FAIR HOUSING ACT (FHA).
3. DOORS SHALL BE OPENABLE WITH NO MORE THAN ONE RELEASING OPERATION.
4. PROVIDE ACCESSIBLE THRESHOLDS AT ALL DOORS.
5. ALL UNITS ARE ADAPTABLE PER FHA. SEE SHEET A0.06 FOR ADDITIONAL INFORMATION.
6. ALL DIMENSIONS ARE TO ROUGH FRAMING U.N.O.
7. ALL WALLS ARE 2X4 STUDS UNLESS NOTED OTHERWISE.
8. ALL TENANT SEPERATIONS AND CORRIDOR WALLS ARE 2X6 UNLESS NOTED OTHERWISE.
9. PATIO AT FIRST FLOOR 4" BELOW UNIT FINISH FLOOR.
10. BALCONIES ARE FLUSH WITH GYPCRETE TOPPING. SEE DETAIL.
11. ALL TOILETS SET ON NEOPRENE GASKET WITH INSULATED PIPE TRAP.
12. ALL KITCHEN APPLIANCES TO HAVE STAINLESS STEEL FRONTS.
13. WHERE DRAWINGS ARE IN CONFLICT WITH OTHER DRAWINGS, CONTRACTOR SHALL NOTIFY THE ARCHITECT.
14. PROVIDE BLOCKING FOR GRAB BARS IN ALL BATHROOMS
15. DIMENSION TO STUD UNLESS OTHERWISE NOTED
16. DIMESNION TO FINISH @ CABINETS
17. PROVIDE BLOCKING FOR TV WALL MOUNT, CENTER AT 60" A.F.F.
18. ALL BATHROOM VANITES ARE 21" IN DEPTH

## ROOM FINISH SCHEDULE

| SPACE | FLOOR | WALL | CEILING | HEIGHT | REMARKS |
|---|---|---|---|---|---|
| KITCHEN | 3 | A | 1 | 9'-0" | |
| LIVING RM. | 3 | A | 1 | 9'-0" | |
| BEDROOMS | 1 | A | 1 | 9'-0" | |
| DEN | 3 | A | 1 | 9'-0" | |
| BATHS | 4 | B/C | 2 | 9'-0" | |
| CLOSETS | | A | 1 | 9'-0" | FLOORING: MATCH ADJ. |
| LAUNDRY | 3 | A | 2 | 9'-0" | FLOORING: MATCH ADJ. |
| UNIT-HVAC | | A | 1 | 9'-0" | FL.: GYPCRETE PAINT-LIGHT GRAY |

### MATERIAL CODE

| FLR. / BASE | | WALL | | CEILING | |
|---|---|---|---|---|---|
| 1 | CPT / WD | A | G.W.B. | 1 | G.W.B. |
| 2 | | B | MR.G.W.B. | 2 | MR.G.W.B. |
| 3 | LVT / WD | C | CT-2 | 3 | |
| 4 | CT / CT | D | | 4 | |
| 5 | | E | | 5 | |
| 6 | | F | | 6 | |
| 7 | | G | | 7 | |
| 8 | | H | | 8 | |

MATERIAL GLOSSARY

| | |
|---|---|
| CPT | CARPET - SHAW GULF WINDS - COLOR: 532 MINERAL |
| CT-1 | CERAMIC TILE - 12X24 FLORIM MATERIA - COLOR: HONED 02 |
| CT-2 | CERAMIC TILE - 12X24 FLORIM MATERIA - COLOR: STONE CALACATTA |
| G.W.B. | GYPSUM WALL BOARD |
| MR.G.W.B. | MOISTURE RESISTANT G.W.B. |
| LVT | VINYL WOOD PLANK - SHAW TERRAIN 12 MIL - COLOR: 766 ECHO |
| WD. | WOOD |

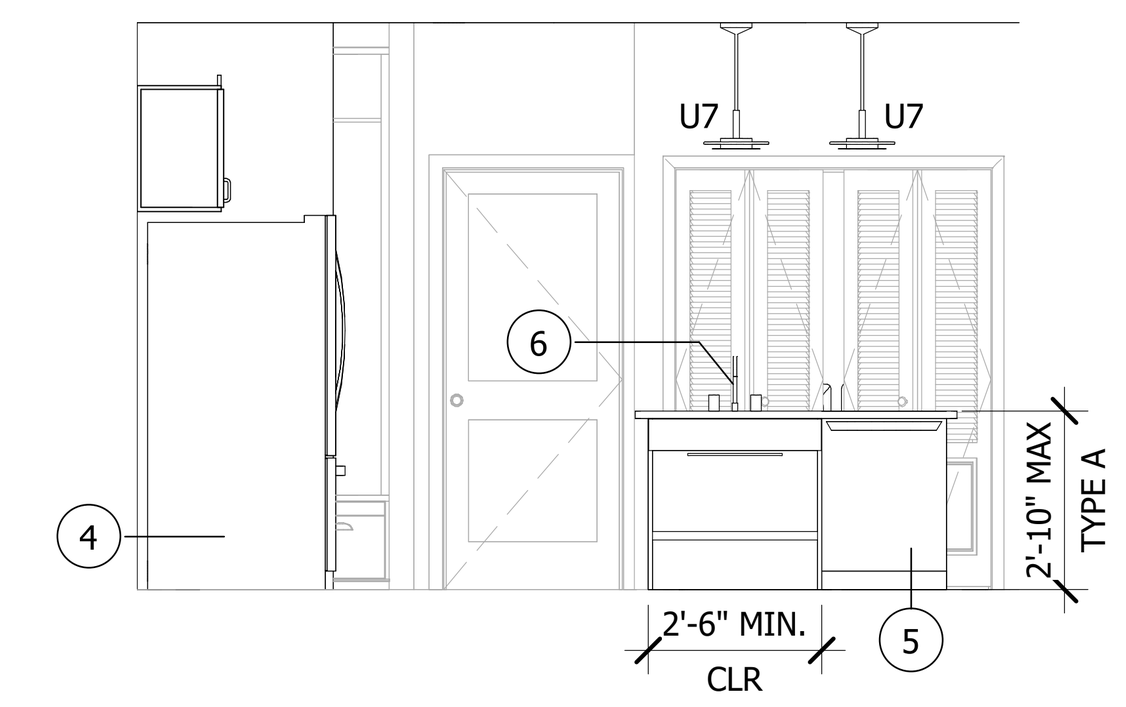


10 UNIT - B TYPE A KITCHEN ELEV. 3
SCALE : 1/4" = 1'-0"

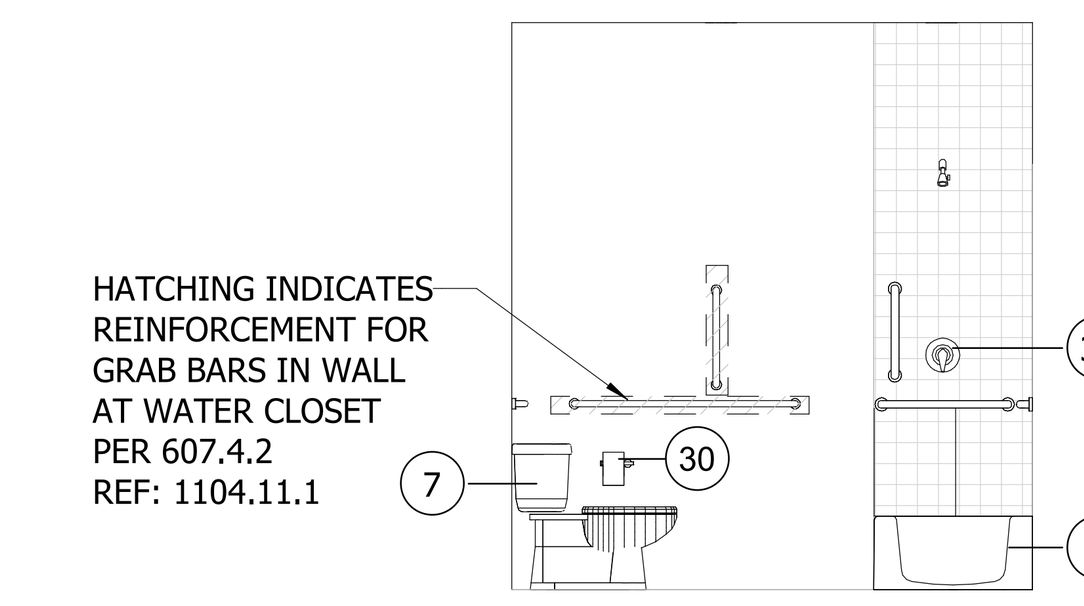


6 UNIT - B TYPE A - BATH. ELEV. 3
SCALE : 1/4" = 1'-0"

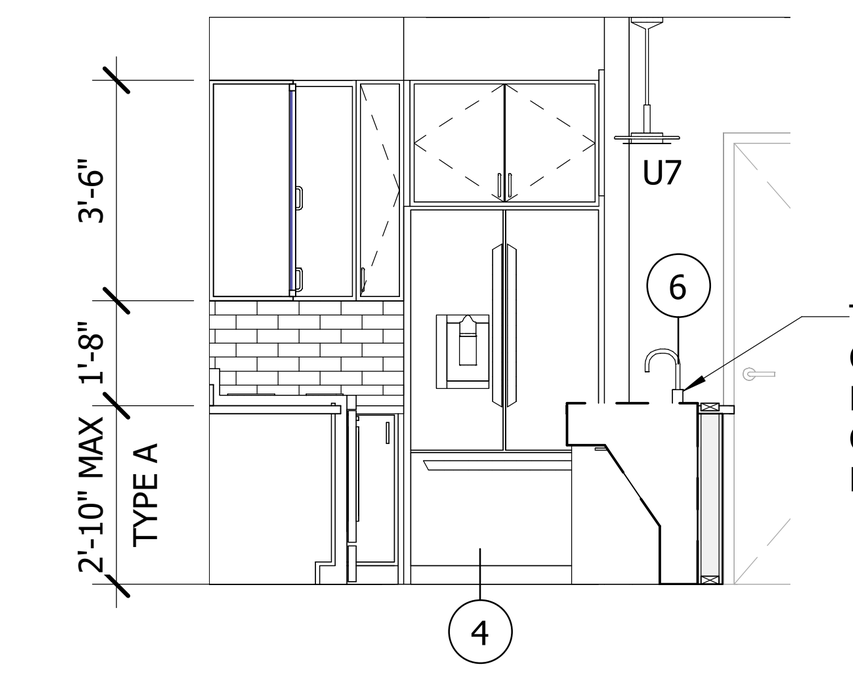


9 UNIT - B TYPE A KITCHEN ELEV. 2
SCALE : 1/4" = 1'-0"




8 UNIT - B TYPE A KITCHEN ELEV. 1
SCALE : 1/4" = 1'-0"

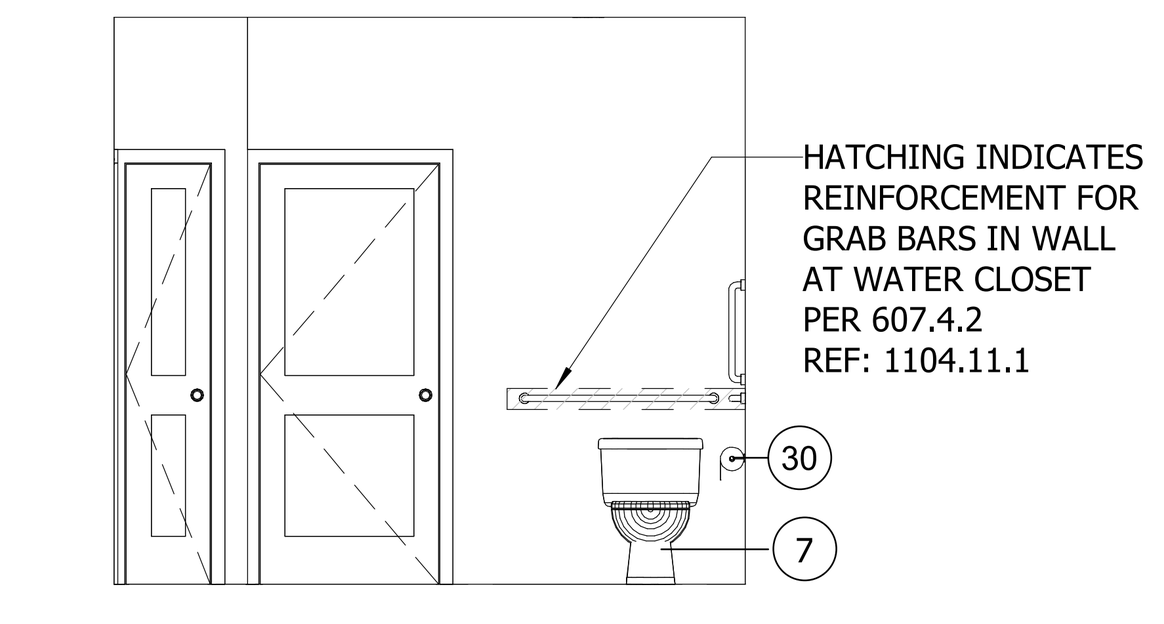


5 UNIT - B TYPE A - BATH. ELEV. 2
SCALE : 1/4" = 1'-0"

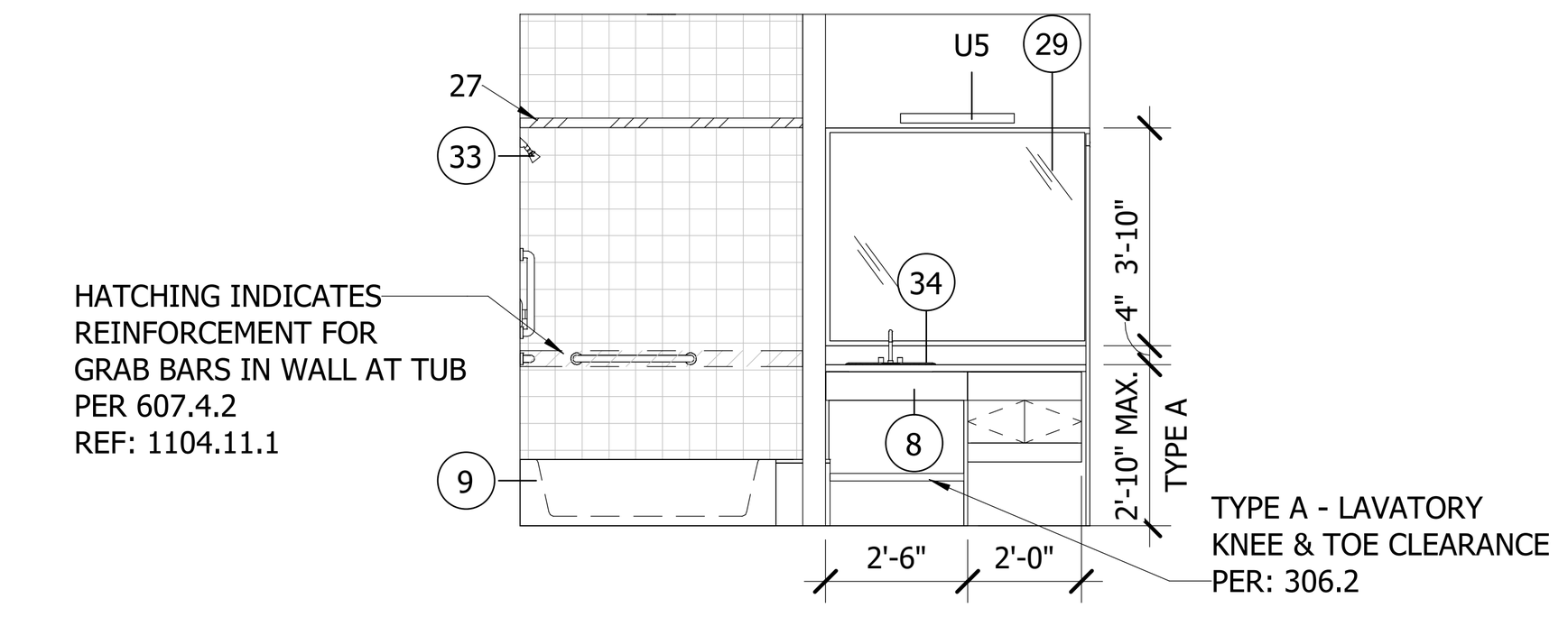


4 UNIT - B TYPE A - BATH. ELEV. 1
SCALE : 1/4" = 1'-0"

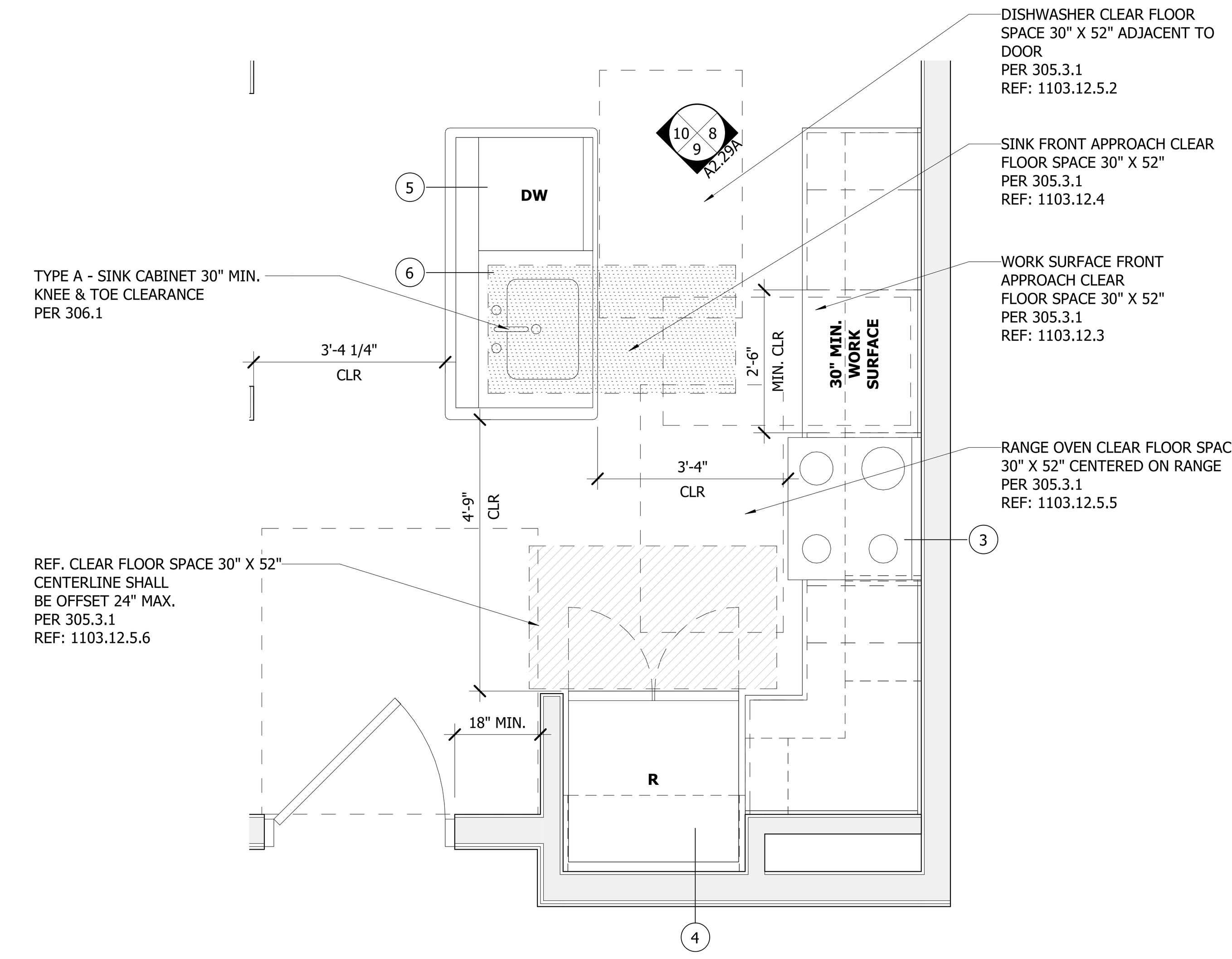


7 UNIT - B TYPE A KITCHEN PLAN
SCALE : 1/2" = 1'-0"

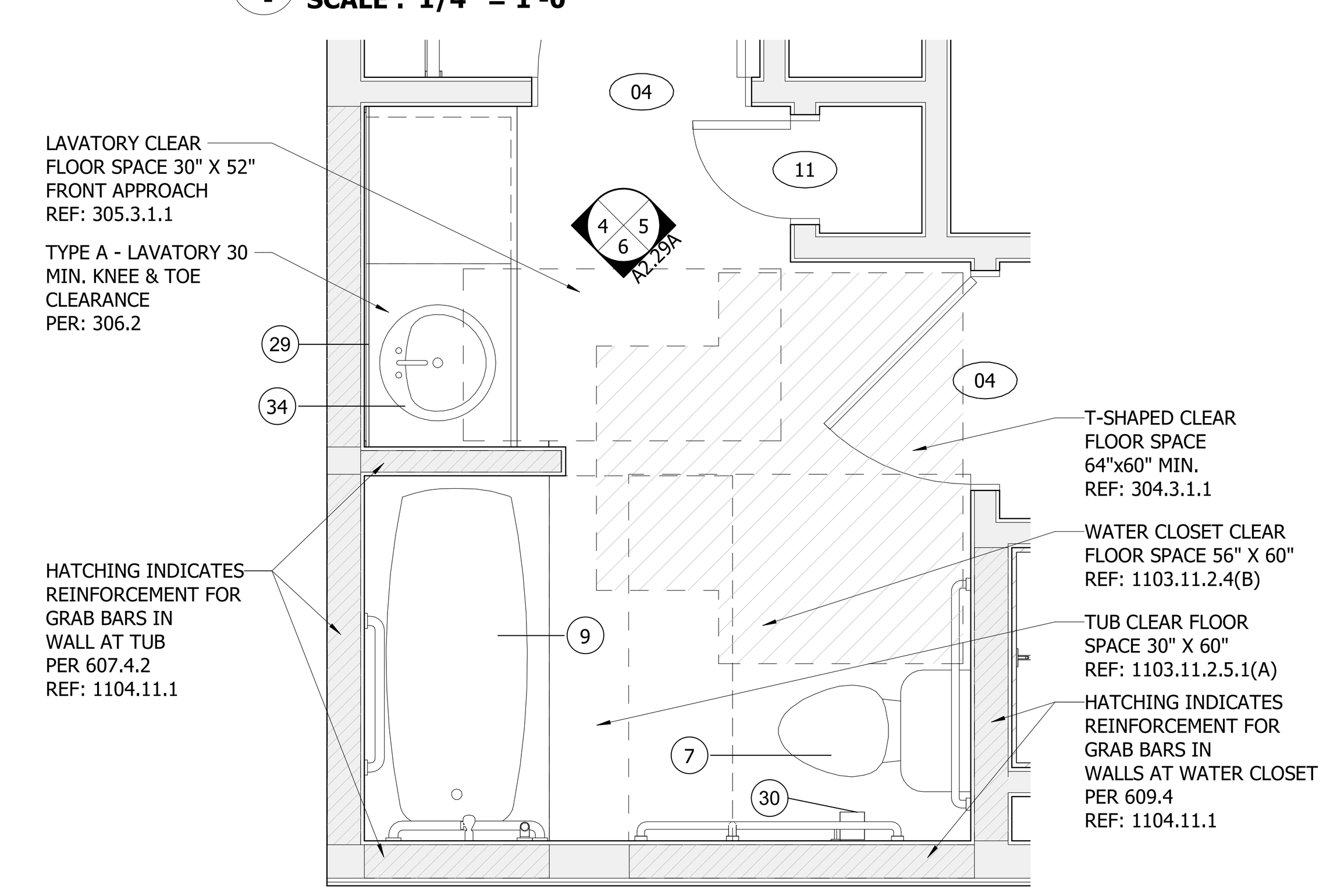


3 UNIT - B TYPE A - BATHROOM
SCALE : 1/2" = 1'-0"

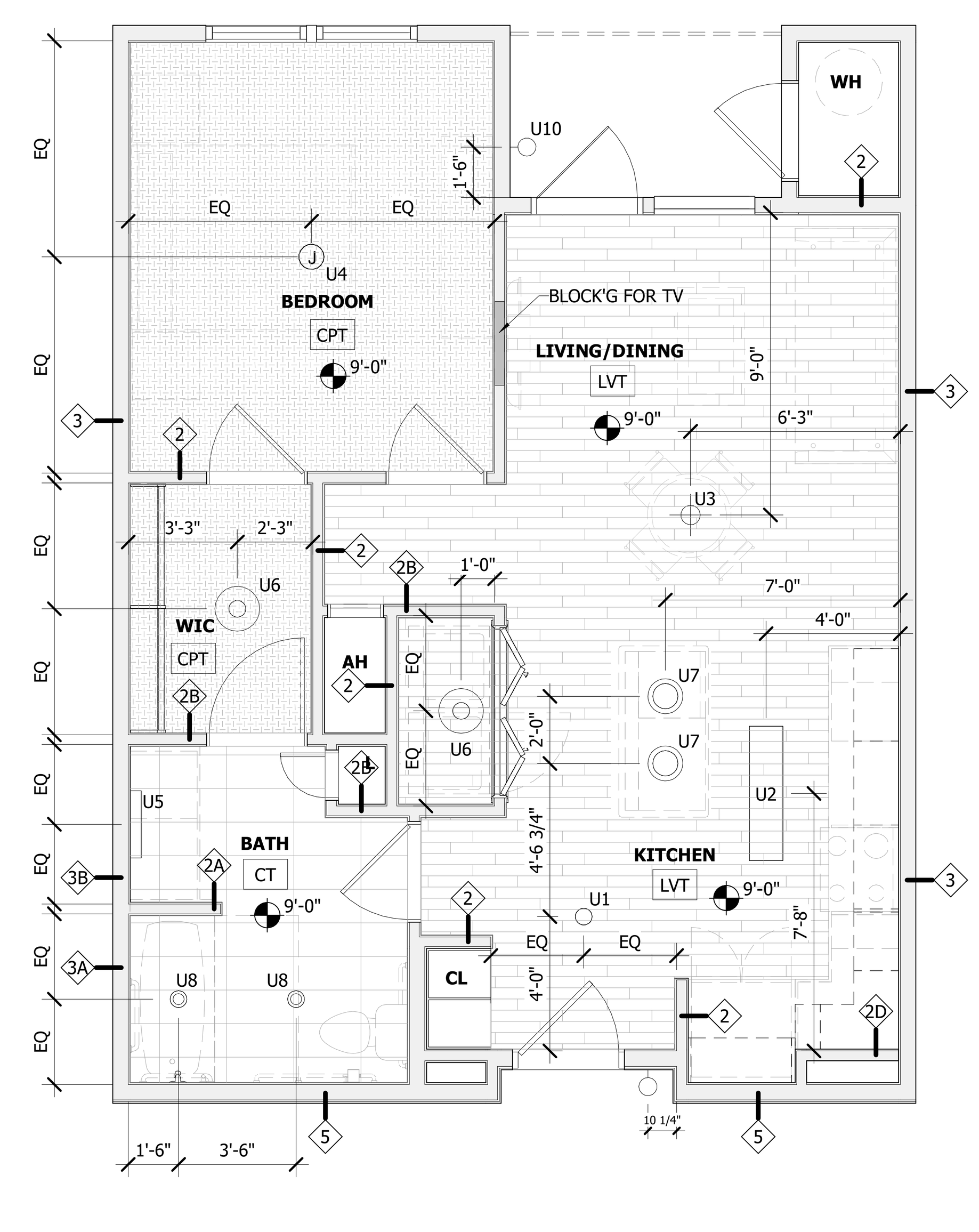


2 UNIT B TYPE A RCP
SCALE : 1/4" = 1'-0"

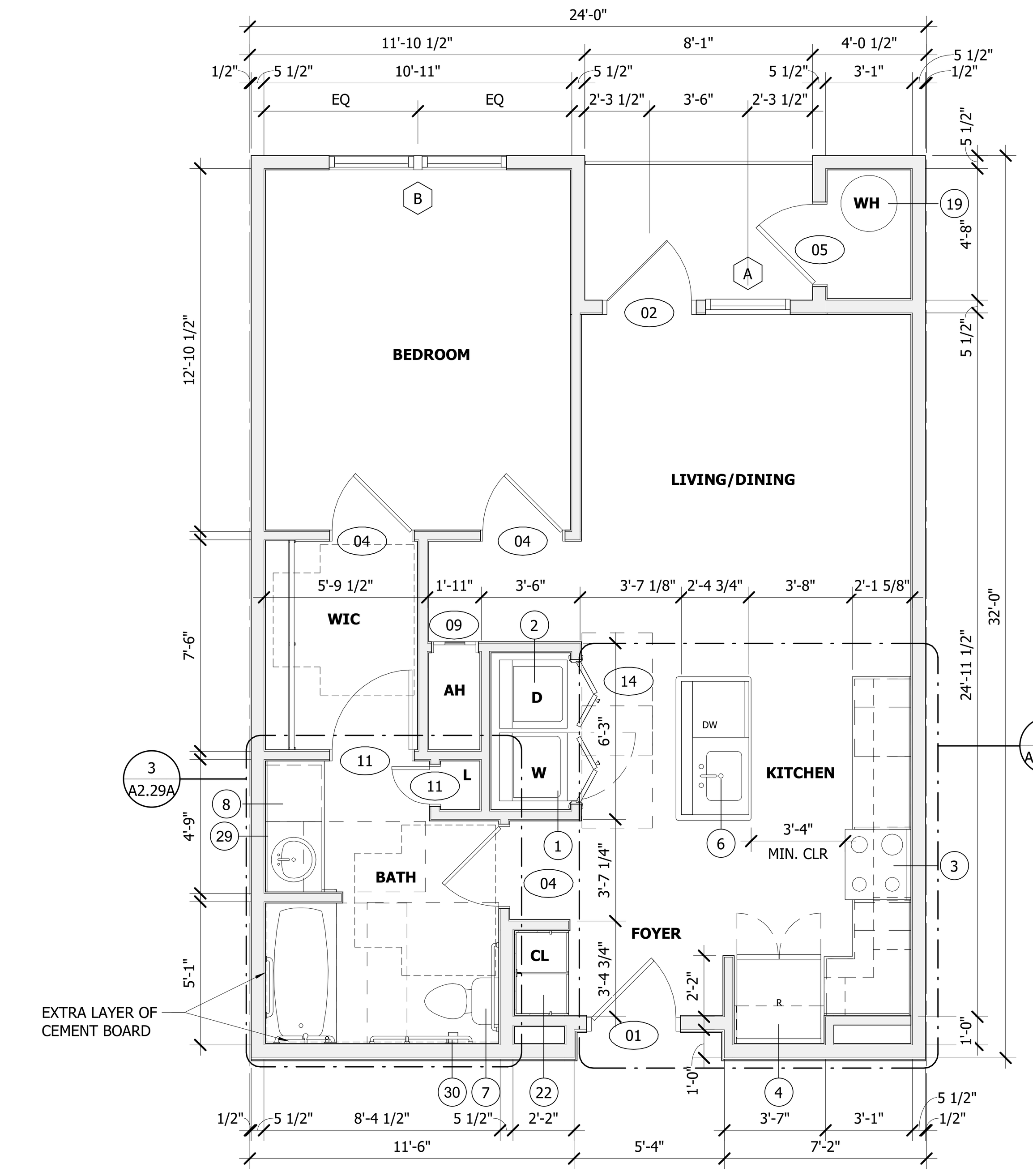


1 UNIT - B TYPE A
SCALE : 1/4" = 1'-0"

| Unit-B | 723 SF |
|---|---|

ALL REPORTS, PLANS, SPECIFICATIONS AND COMPUTER FILES RELATING TO THIS PROJECT ARE THE PROPERTY OF THE MARTIN ARCHITECTURAL GROUP. THE MARTIN ARCHITECTURAL GROUP RETAINS ALL COMMON LAW, STATUTE AND OTHER RESERVED RIGHTS INCLUDING THE COPY-RIGHT THERETO. REPRODUCTION OF THE MATERIAL HEREIN OR SUBSTANTIAL USE WITHOUT WRITTEN PERMISSION OF THE MARTIN ARCHITECTURAL GROUP VIOLATES THE COPYRIGHT LAWS OF THE UNITED STATES AND WILL BE SUBJECT TO LEGAL PROSECUTION.
©2022, The Martin Architectural Group, P.C.

THE MARTIN ARCHITECTURAL GROUP, P.C.
ARCHITECTS AND LAND PLANNERS
A PROFESSIONAL CORPORATION
240 NORTH 22ND STREET, PHILADELPHIA, PA, 19103
P (215) 665-1080 F (215) 561-5064

| | |
|---|---|
| P.A.: | DREW ROMANIC |
| P.M.: | JASON DECAMPLI |
| DRAWN BY: | Author |
| PROJECT NO: | 1362-12 |

| NO. | REVISION | DATE |
|---|---|---|
| 1 | PERMIT SET | 12/20/22 |

# UNIT PLAN (UNIT B TYPE A)
**Granite Run Apartment 02**
MIDDLETOWN TOWNSHIP, PA

| | |
|---|---|
| SCALE: | |
| DATE: | 12/09/22 |

**A2.29A**

©2022, The Martin Architectural Group, P.C.

Printed: 1/13/2023 4:33:00 PM

| DOOR SCHEDULE - DWELLING UNIT | | | | | | | | |
|---|---|---|---|---|---|---|---|---|
| MARK | DOOR TYPE | WIDTH | HEIGHT | DOOR MATERIAL | FRAME TYPE | FRAME MATERIAL | FIRE RATING | REMARKS |
| 01 | UA | 3'-0" | 7'-0" | MTL | F1 | MTL | 20 min. | UNIT ENTRY - SPRING HINGES |
| 02 | UE | 3'-0" | 7'-0" | VY | F1 | VY | | BALCONY DOOR |
| 03 | UB | 3'-0" | 6'-8" | MTE | F1 | WD | | |
| 04 | UB | 2'-10" | 6'-8" | MTE | F1 | WD | | |
| 05 | UA | 2'-10" | 6'-8" | EM | F1 | MTL | | UNIT EXT. MECH DOOR |
| 06 | UB | 2'-6" | 6'-8" | MTE | F1 | WD | | |
| 07 | UB | 2'-0" | 6'-8" | MTE | F1 | WD | | |
| 08 | UC | 2'-0" | 6'-8" | MTE | F1 | WD | | LOUVERED AIR HANDLER |
| 09 | UC | 1'-6" | 6'-8" | MTE | F1 | WD | | LOUVERED AIR HANDLER |
| 10 | UB | 1'-6" | 6'-8" | MTE | F1 | WD | | |
| 11 | UB | 1'-4" | 6'-8" | MTE | F1 | WD | | |
| 12 | UDD | 4'-0" | 6'-8" | MTE | | WD | | SLIDING BARN DOOR |
| 13 | UBB | 5'-0" | 6'-8" | MTE | F2 | WD | | DOUBLE SWING DOOR |
| 14 | UCC | 5'-0" | 6'-8" | MTE | F2 | WD | | LOUVERED BI-FOLD |
| 15 | UCC | 6'-0" | 6'-8" | MTE | F2 | WD | | LOUVERED BI-FOLD |
| 19 | UB | 1'-9" | 6'-8" | MTE | F1 | WD | | |
| E | | 3'-0" | 7'-0" | | | | | |
| EE | | 6'-0" | 7'-0" | | | | | |
| F | | 6'-0" | 7'-0" | | | | | *RATED GLASS |

## UNIT DOOR TYPES

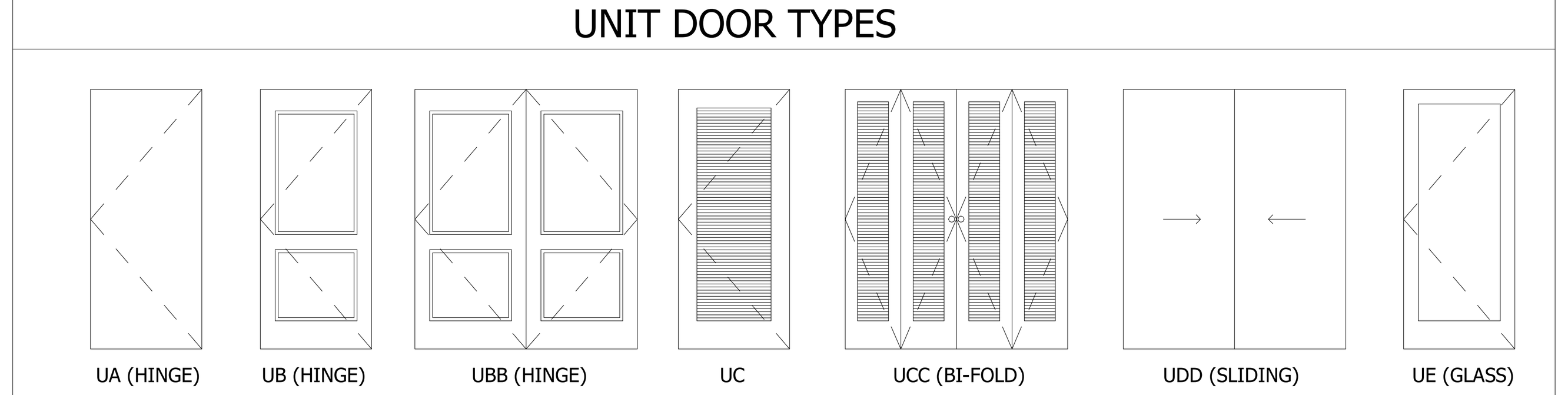


## FRAME TYPES

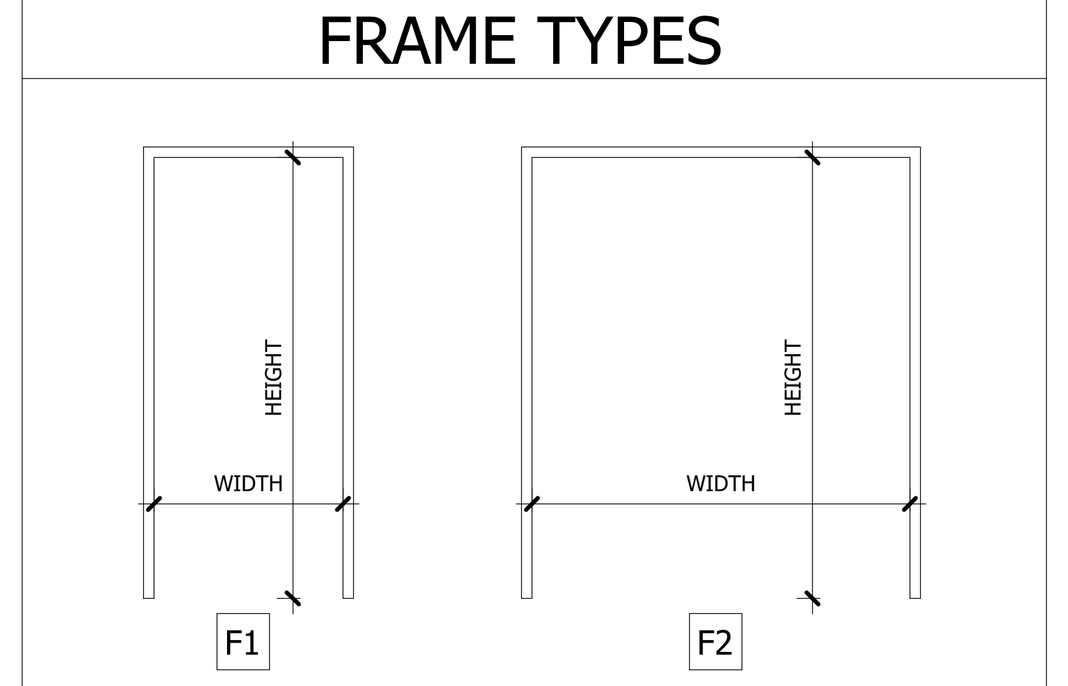


**DOOR/FRAME MATERIAL KEY:**

AL ALUMINUM
EM EXTERIOR METAL
GL GLASS
HC HOLLOW CORE
HM HOLLOW METAL
MTL METAL
SC SOLID CORE
SR STILE & RAIL
VY VINYL
WD WOOD
MTE MASONITE

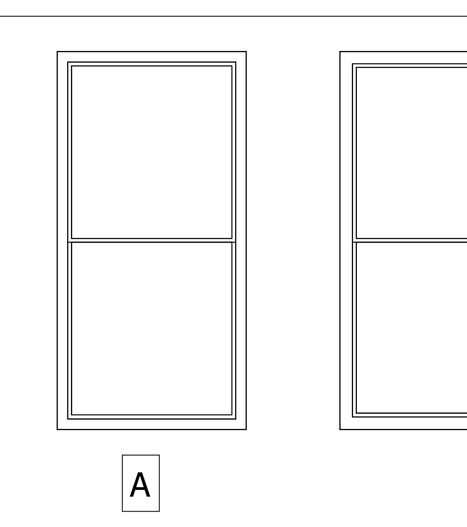


NOTE: (2) 2X6 FRT STUDS PROVIDED BETWEEN GROUP WINDOWS. (TYPICAL) PROVIDE 4" LIMITATION FOR WINDOW LIMITERS ON ALL WINDOWS

| WINDOW SCHEDULE | | | | | |
|---|---|---|---|---|---|
| MARK | WIDTH | HEIGHT | WINDOW TYPE | CONSTRUCTION TYPE | COMMENTS |
| A | 3'-0" | 6'-0" | SINGLE HUNG | VINYL | All windows to be provided with opening limiters. See specifications. |
| B | 6'-3 1/2" | 6'-0" | SINGLE HUNG | VINYL | All windows to be provided with opening limiters. See specifications. |

| LIGHT FIXTURE LEGEND | |
|---|---|
| U1 | LITHONIA FMSATL-16-20840-BN; SEMI FLUSH MOUNT |
| U2 | LITHONIA FMFL-30840-SATL-BN; LINEAR FLUSH MOUNT |
| U3 | LITHONIA DFMADRL-14-F01; FMPANL-14-20840M6; LED SURFACE MOUNT DRUM |
| U4 | SATCO COVER PLATE |
| U5 | PROGRESS P300187-009-30; LED BATH VANITY |
| U6 | LITHONIA FMMUSL-9-14840-WH; LED CLOSET MUSHROOM |
| U7 | LITHONIA MDPC-BNP-M6; DGDT 1003 M6 |
| U8 | COOPER SMD6R-12-930-WH; 1200 LUMEN SLIM SURFACE (120 VOLT ONLY) |
| U9 | NUVO 62-1161; 7" LED FLUSH MOUNT DISCK |
| U10 | LITHONIA OLWPLED-P1-40K-120-PE-BZ; LED MINI WALL PACK |

| UNIT PLAN AND INTERIOR ELEVATION KEYNOTES | |
|---|---|
| Number | Description |
| 1 | WASHER |
| 2 | DRYER |
| 3 | RANGE / OVEN |
| 4 | REFRIGERATOR |
| 5 | DISHWASHER |
| 6 | KITCHEN SINK / FAUCET |
| 7 | TOILET |
| 8 | VANITY - SEE ELEVATION FOR SIZE |
| 9 | 30"X60" TUB |
| 10 | 36"X60" SHOWER BASE |
| 11 | 32"X60" SHOWER BASE |
| 12 | ACCESSIBLE THRESHOLD - MARBLE |
| 13 | ACCESSIBLE THRESHOLD - ALUMINIUM |
| 14 | SOFFIT OVER REFRIGERATOR AND BEHIND CABINET |
| 15 | LINEN SHELVES (5) PER SPECIFICATION |
| 16 | WIRE SHEVLING |
| 17 | KNEE WALL BELOW COUNTERTOP |
| 18 | BALCONY RAILING @ 42" HIGH |
| 19 | WALL MOUNTED HOT WATER HEATER |
| 20 | HVAC UNIT MOUNTED ON WALL |
| 21 | PRE ROCK BEHIND BATHING FIXTURES |
| 22 | CUBBIE CABINETS |
| 23 | MICROWAVE WITH RECIRCULATION HOOD |
| 24 | WALL TILE BETWEEN CONTERTOP AND WALL CABINET. SEE 1D DRAWING |
| 25 | BLOCKING FOR GRAB BAR. SEE FIG. 4- SHEET A0.06 |
| 26 | 24" HORIZONTAL GRAB BAR @ TUB BACK WALL. SEE FIG. 4 - SHEET A0.06 |
| 27 | SHOWER ROD |
| 28 | NOT USED |
| 29 | PAINTED FRAME MIRROR |
| 30 | TOILET TISSUE HOLDER @ 26" A.F.F. |
| 31 | 30" TOWEL BAR |
| 32 | ROBE HOOK |
| 33 | SHOWER HEAD |
| 34 | VANITY SINK BOWL |

| ROOM FINISH MATERIAL CODE | |
|---|---|
| CPT | CARPET |
| CT | CERAMIC TILE |
| CONC | CONCRETE |
| GWB | GYPSUM WALL BOARD |
| MR GWB | MOISTURE RESISTANT GWB |
| V | SHEET VINYL |
| VWP | VINYL WOOD PLANK |
| VCT | VINYL COMPOSITE TILE |
| WD | WOOD |

**NOTES:**

1. SEE SPECIFICATIONS FOR ADDITIONAL INFORMATION.
2. ALL DOOR HARDWARE TO BE COMPLIANT WITH THE FEDERAL FAIR HOUSING ACT (FHA).
3. DOORS SHALL BE OPENABLE WITH NO MORE THAN ONE RELEASING OPERATION.
4. PROVIDE ACCESSIBLE THRESHOLDS AT ALL DOORS.
5. ALL UNITS ARE ADAPTABLE PER FHA. SEE SHEET A0.06 FOR ADDITIONAL INFORMATION.
6. ALL DIMENSIONS ARE TO ROUGH FRAMING U.N.O.
7. ALL WALLS ARE 2X4 STUDS UNLESS NOTED OTHERWISE.
8. ALL TENANT SEPERATIONS AND CORRIDOR WALLS ARE 2X6 UNLESS NOTED OTHERWISE.
9. PATIO AT FIRST FLOOR 4" BELOW UNIT FINISH FLOOR.
10. BALCONIES ARE FLUSH WITH GYPCRETE TOPPING. SEE DETAIL.
11. ALL TOILETS SET ON NEOPRENE GASKET WITH INSULATED PIPE TRAP.
12. ALL KITCHEN APPLIANCES TO HAVE STAINLESS STEEL FRONTS.
13. WHERE DRAWINGS ARE IN CONFLICT WITH OTHER DRAWINGS, CONTRACTOR SHALL NOTIFY THE ARCHITECT.
14. PROVIDE BLOCKING FOR GRAB BARS IN ALL BATHROOMS
15. DIMENSION TO STUD UNLESS OTHERWISE NOTED
16. DIMESNION TO FINISH @ CABINETS
17. PROVIDE BLOCKING FOR TV WALL MOUNT, CENTER AT 60" A.F.F.
18. ALL BATHROOM VANITES ARE 21" IN DEPTH

## ROOM FINISH SCHEDULE

| SPACE | FLOOR | WALL | CEILING | HEIGHT | REMARKS |
|---|---|---|---|---|---|
| KITCHEN | 3 | A | 1 | 9'-0" | |
| LIVING RM. | 3 | A | 1 | 9'-0" | |
| BEDROOMS | 1 | A | 1 | 9'-0" | |
| DEN | 3 | A | 1 | 9'-0" | |
| BATHS | 4 | B/C | 2 | 9'-0" | |
| CLOSETS | | A | 1 | 9'-0" | FLOORING: MATCH ADJ. |
| LAUNDRY | 3 | A | 2 | 9'-0" | FLOORING: MATCH ADJ. |
| UNIT-HVAC | | A | 1 | 9'-0" | FL.: GYPCRETE PAINT-LIGHT GRAY |

## MATERIAL CODE

| FLR. / BASE | | WALL | | CEILING | |
|---|---|---|---|---|---|
| 1 | CPT / WD | A | G.W.B. | 1 | G.W.B. |
| 2 | | B | MR.G.W.B. | 2 | MR.G.W.B. |
| 3 | LVT / WD | C | CT-2 | 3 | |
| 4 | CT / CT | D | | 4 | |
| 5 | | E | | 5 | |
| 6 | | F | | 6 | |
| 7 | | G | | 7 | |
| 8 | | H | | 8 | |

MATERIAL GLOSSARY

| | |
|---|---|
| CPT | CARPET - SHAW GULF WINDS - COLOR: 532 MINERAL |
| CT-1 | CERAMIC TILE - 12X24 FLORIM MATERIA - COLOR: HONED 02 |
| CT-2 | CERAMIC TILE - 12X24 FLORIM MATERIA - COLOR: STONE CALACATTA |
| G.W.B. | GYPSUM WALL BOARD |
| MR.G.W.B. | MOISTURE RESISTANT G.W.B. |
| LVT | VINYL WOOD PLANK - SHAW TERRAIN 12 MIL - COLOR: 766 ECHO |
| WD. | WOOD |

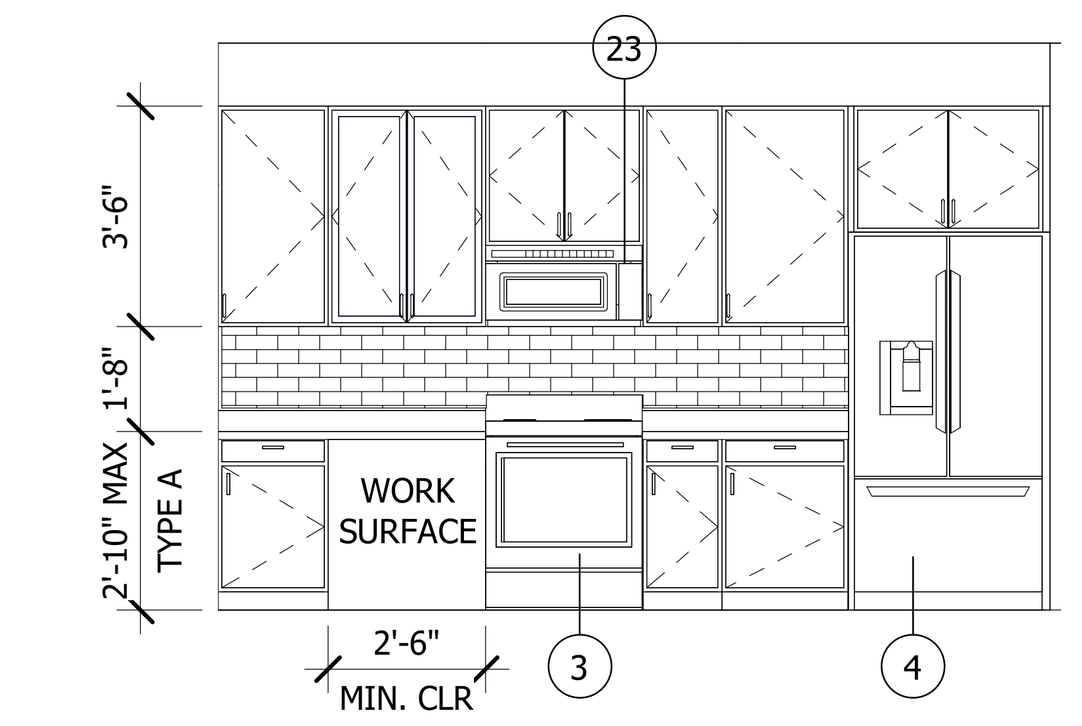


11 UNIT C TYPE A - KITCHEN ELEV. 1
SCALE : 1/4" = 1'-0"

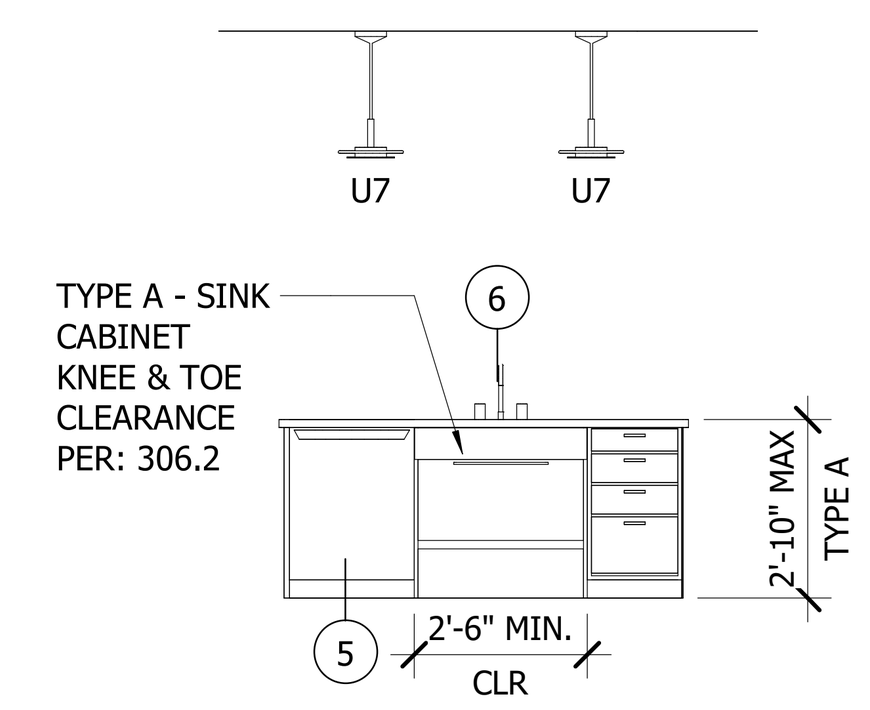


12 UNIT C TYPE A - KITCHEN ELEV. 2
SCALE : 1/4" = 1'-0"

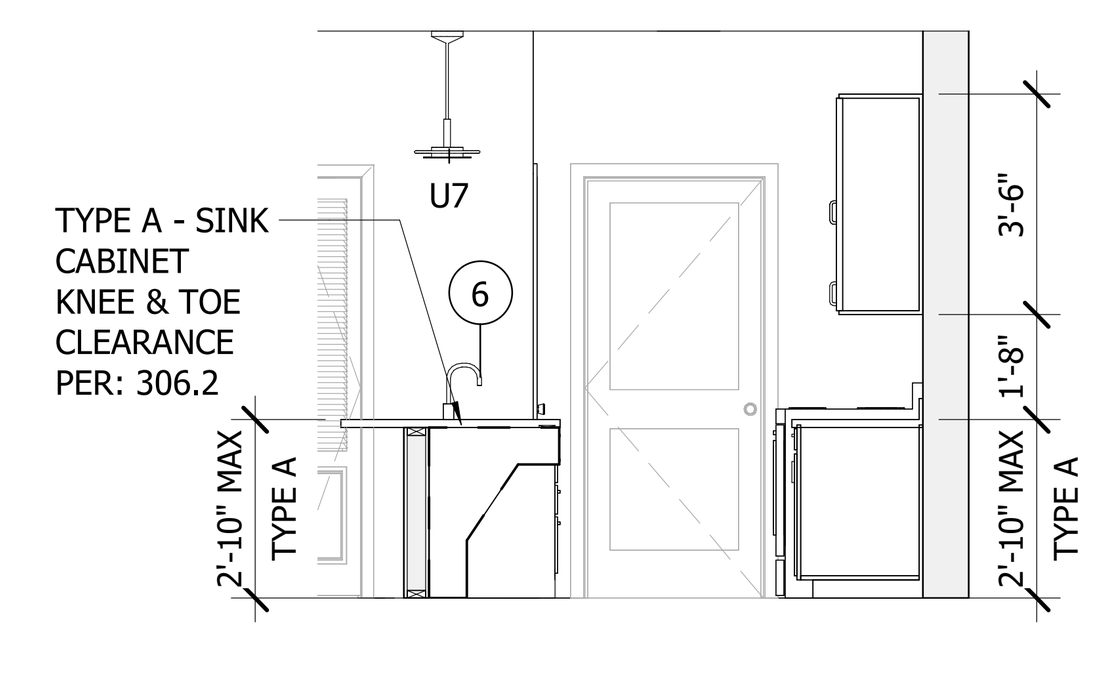


13 UNIT C TYPE A - KITCHEN ELEV. 3
SCALE : 1/4" = 1'-0"

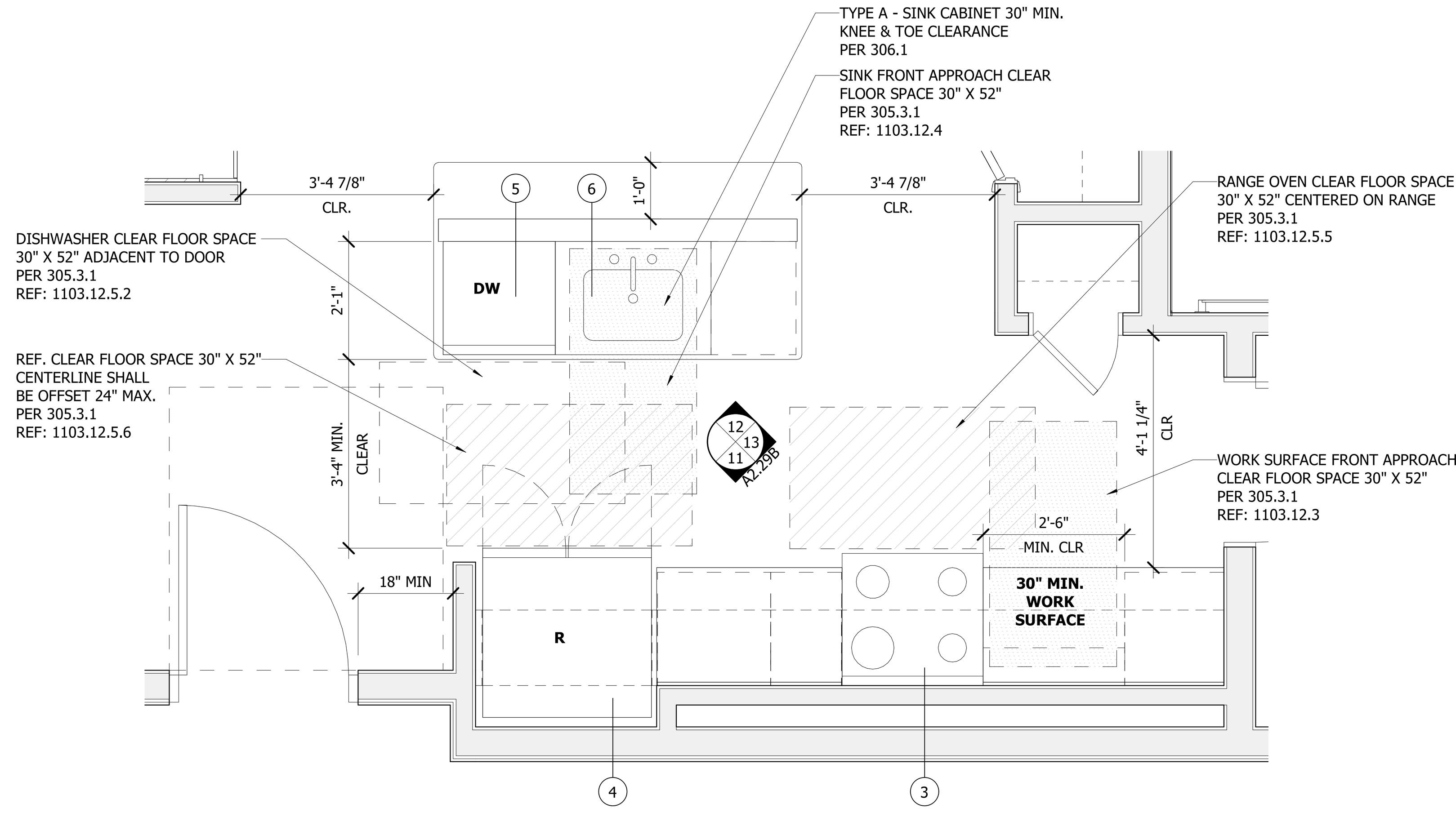


10 UNIT - C TYPE A KITCHEN PLAN
SCALE : 1/2" = 1'-0"

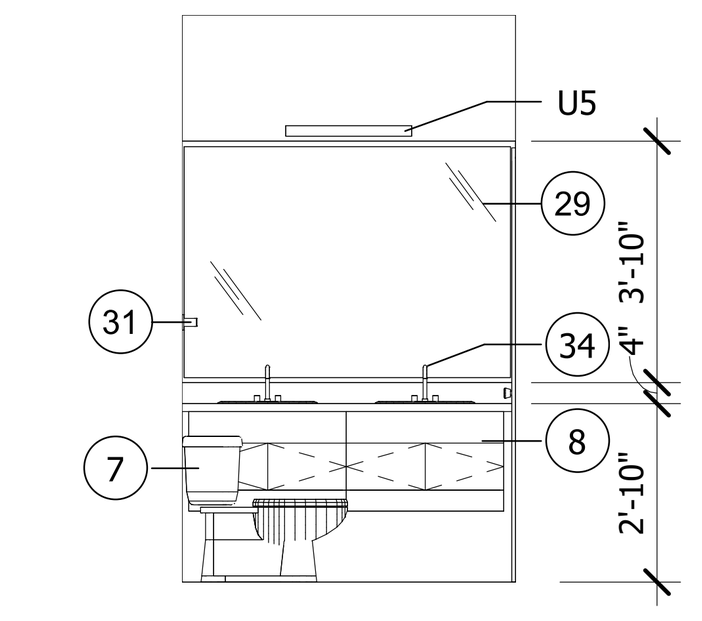


9 UNIT C TYPE A - BATH. 2 ELEV. 1
SCALE : 1/4" = 1'-0"

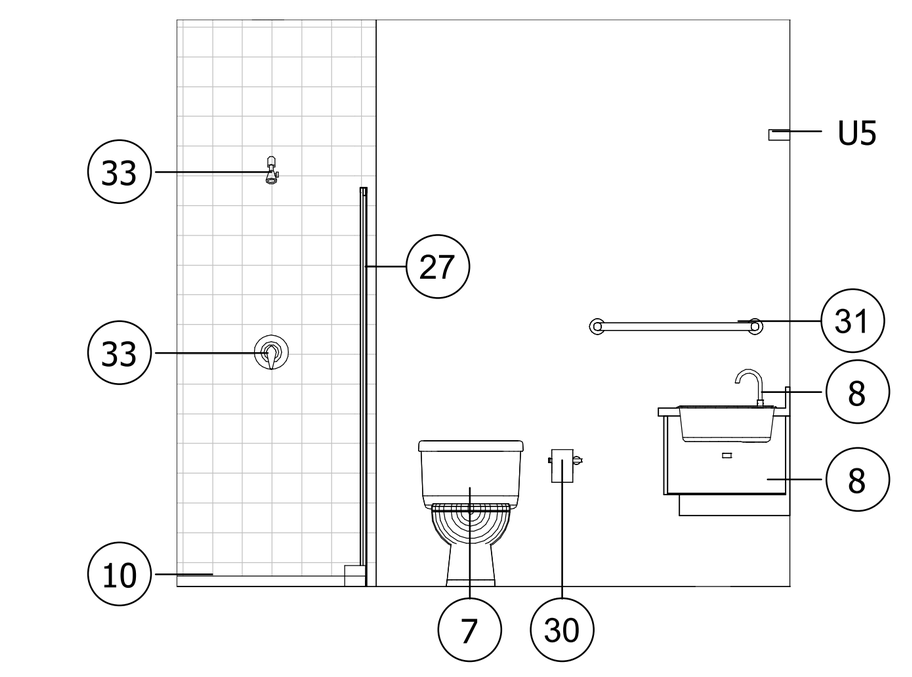


8 UNIT C TYPE A - BATH. 2 ELEV. 2
SCALE : 1/4" = 1'-0"

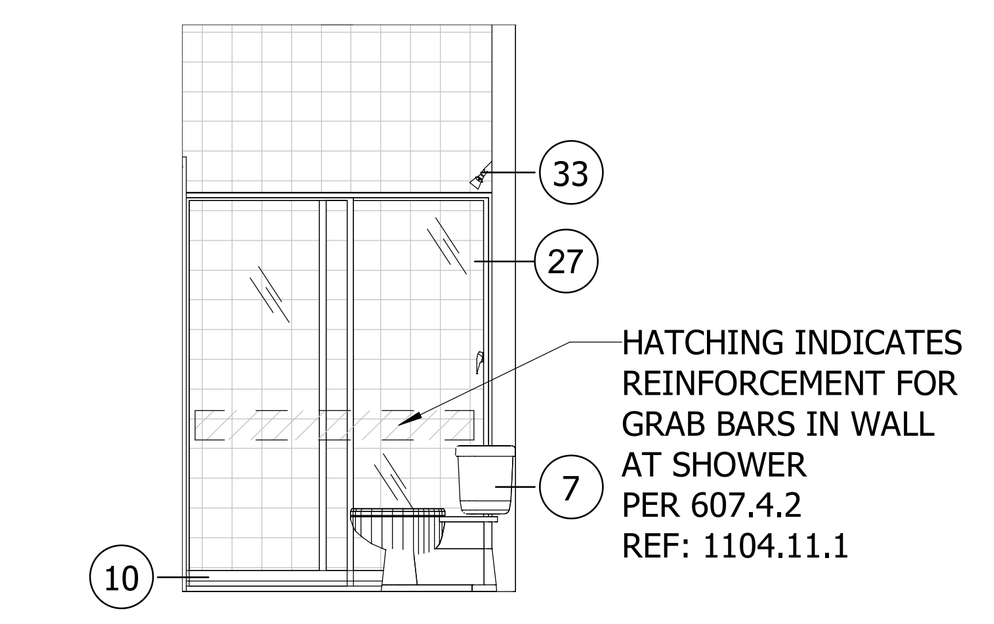


7 UNIT C TYPE A - BATH. 2 ELEV. 3
SCALE : 1/4" = 1'-0"

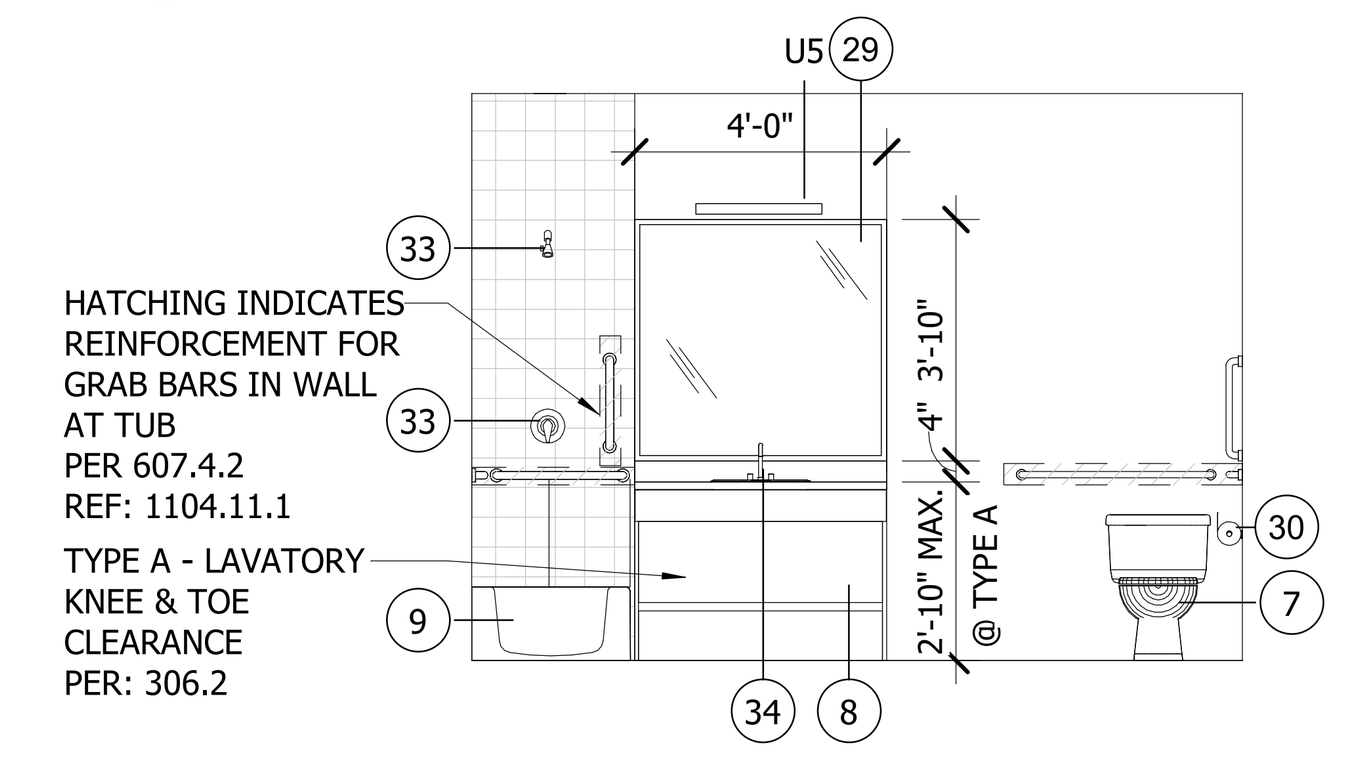


4 UNIT C TYPE A - BATH. 1 ELEV. 1
SCALE : 1/4" = 1'-0"

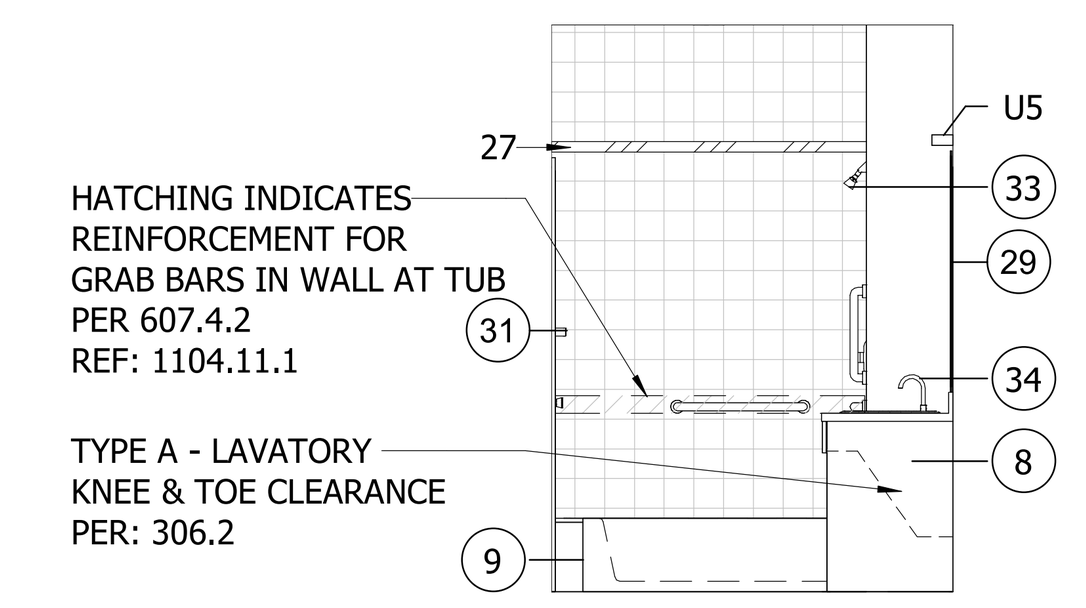


5 UNIT C TYPE A - BATH. 1 ELEV. 2
SCALE : 1/4" = 1'-0"

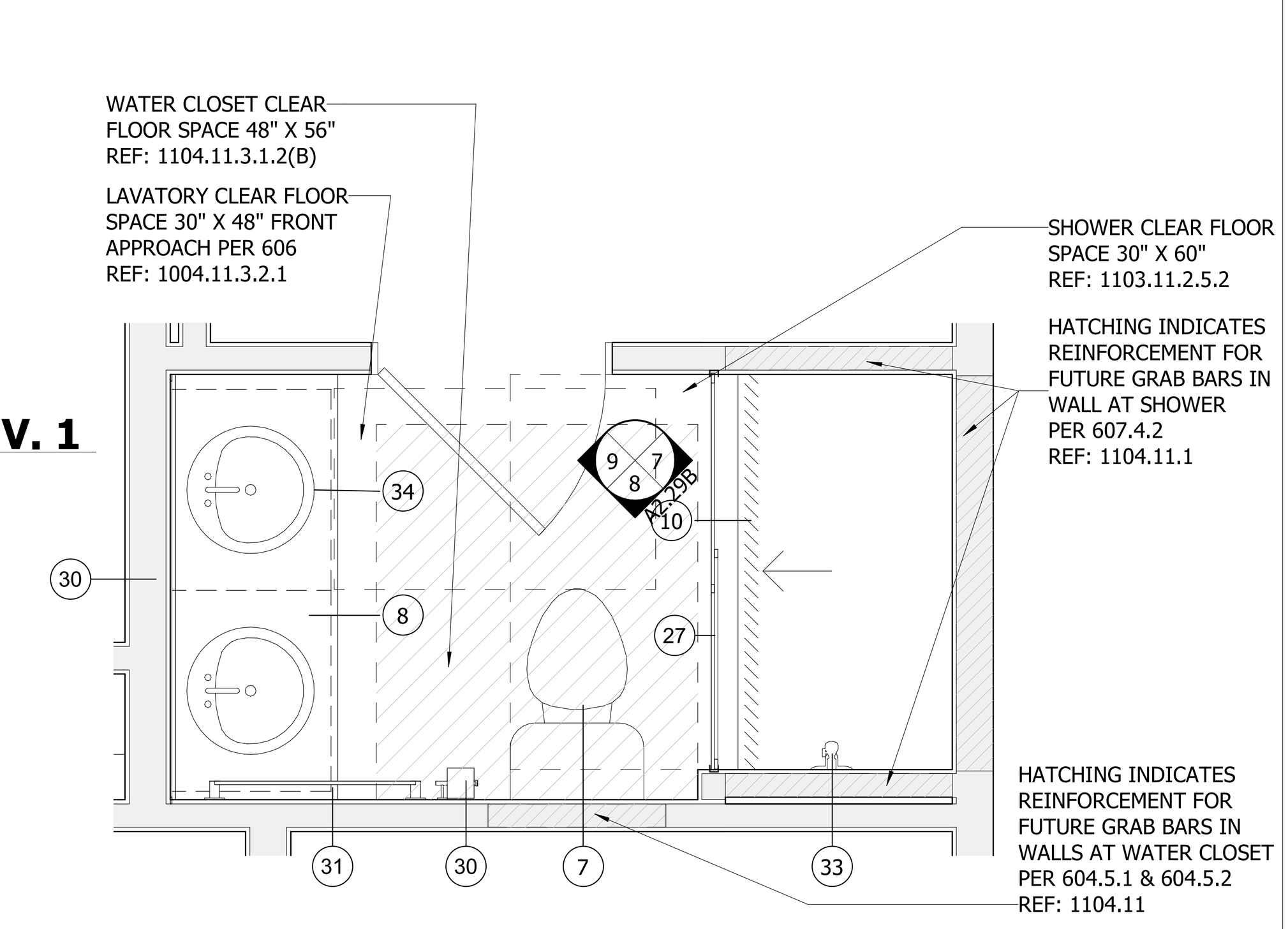


6 UNIT - C TYPE A - BATHROOM 2
SCALE : 1/2" = 1'-0"

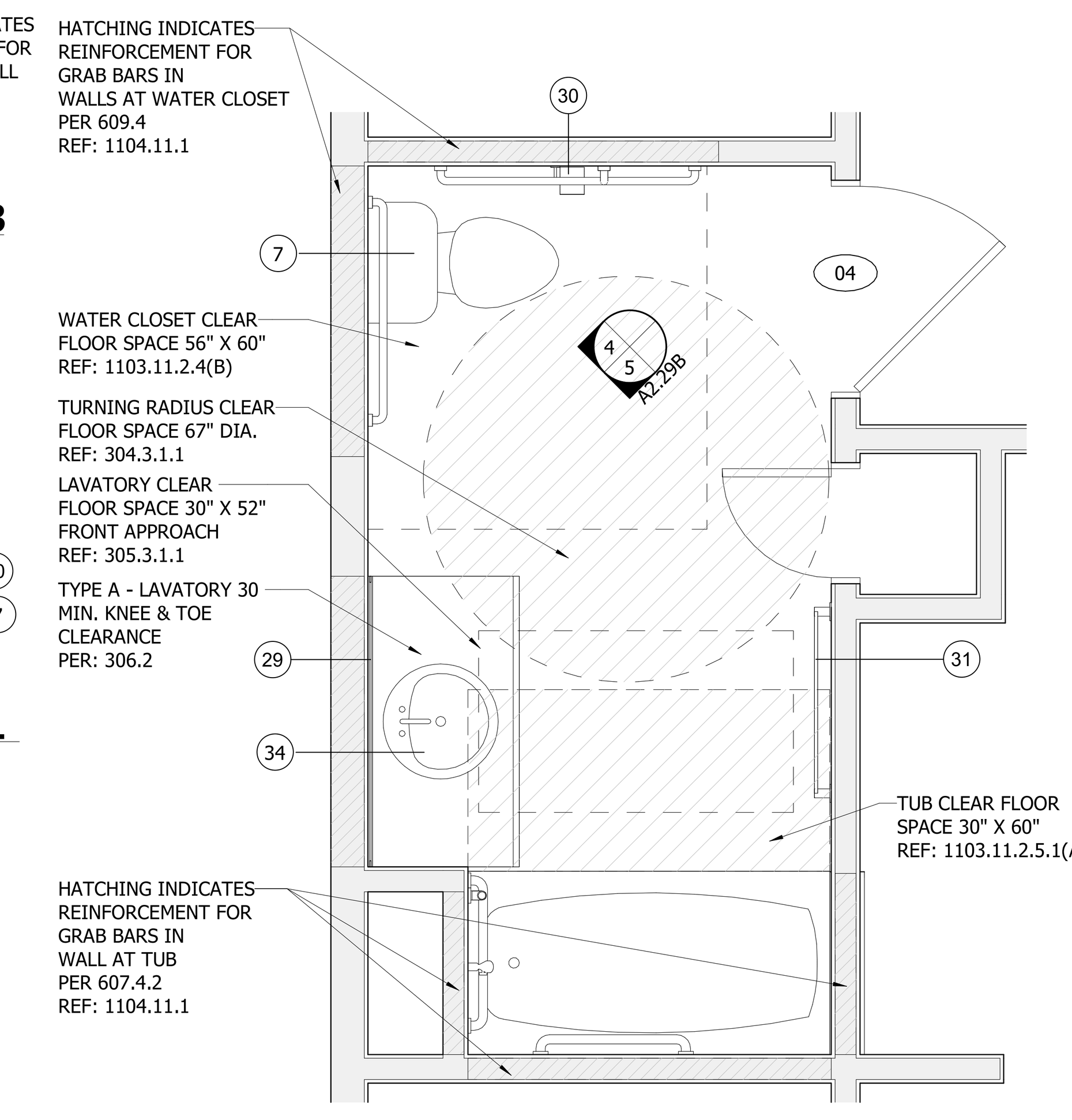


3 UNIT - C TYPE A - BATHROOM 1
SCALE : 1/2" = 1'-0"

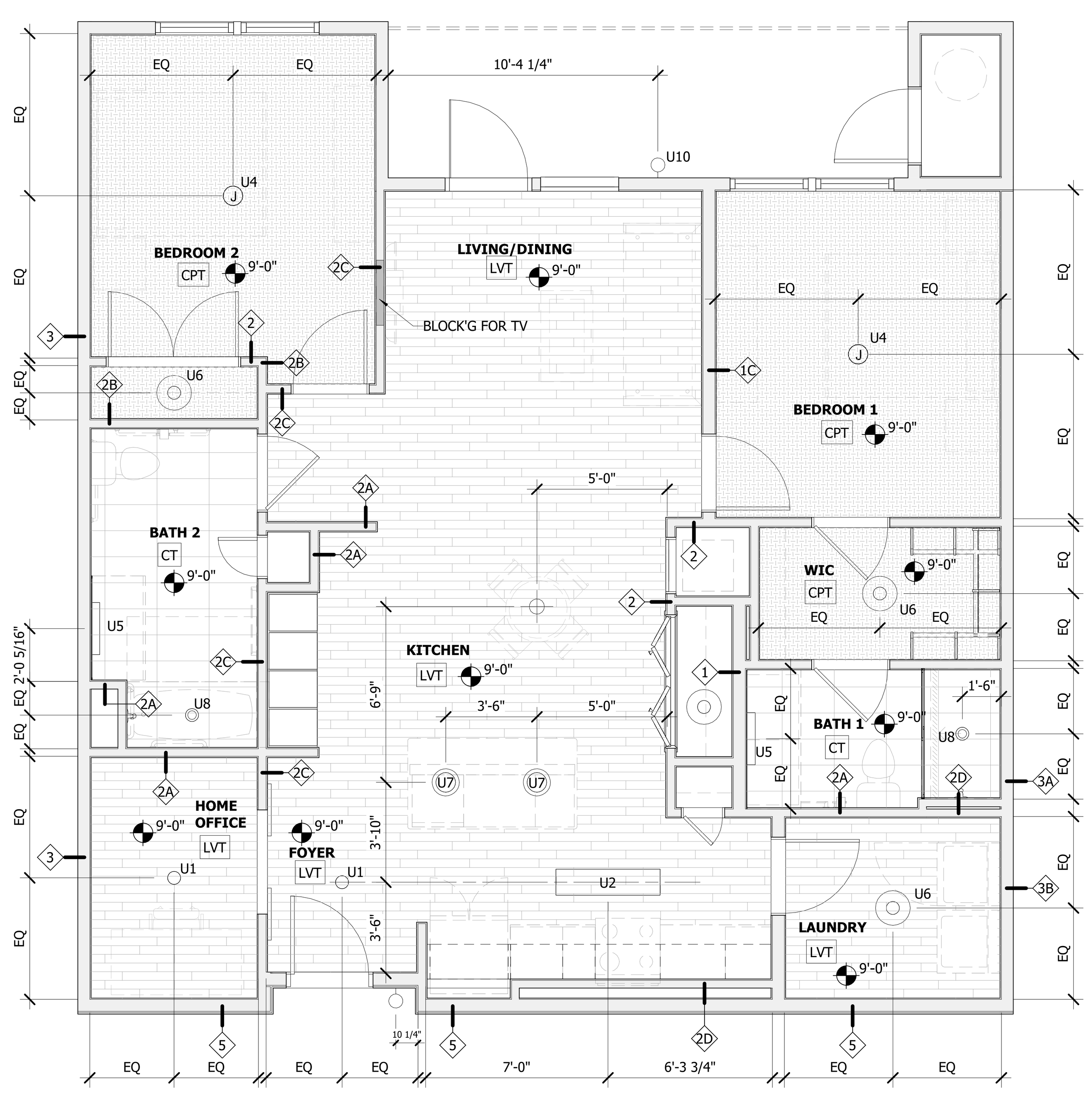


2 UNIT C TYPE A RCP
SCALE : 1/4" = 1'-0"

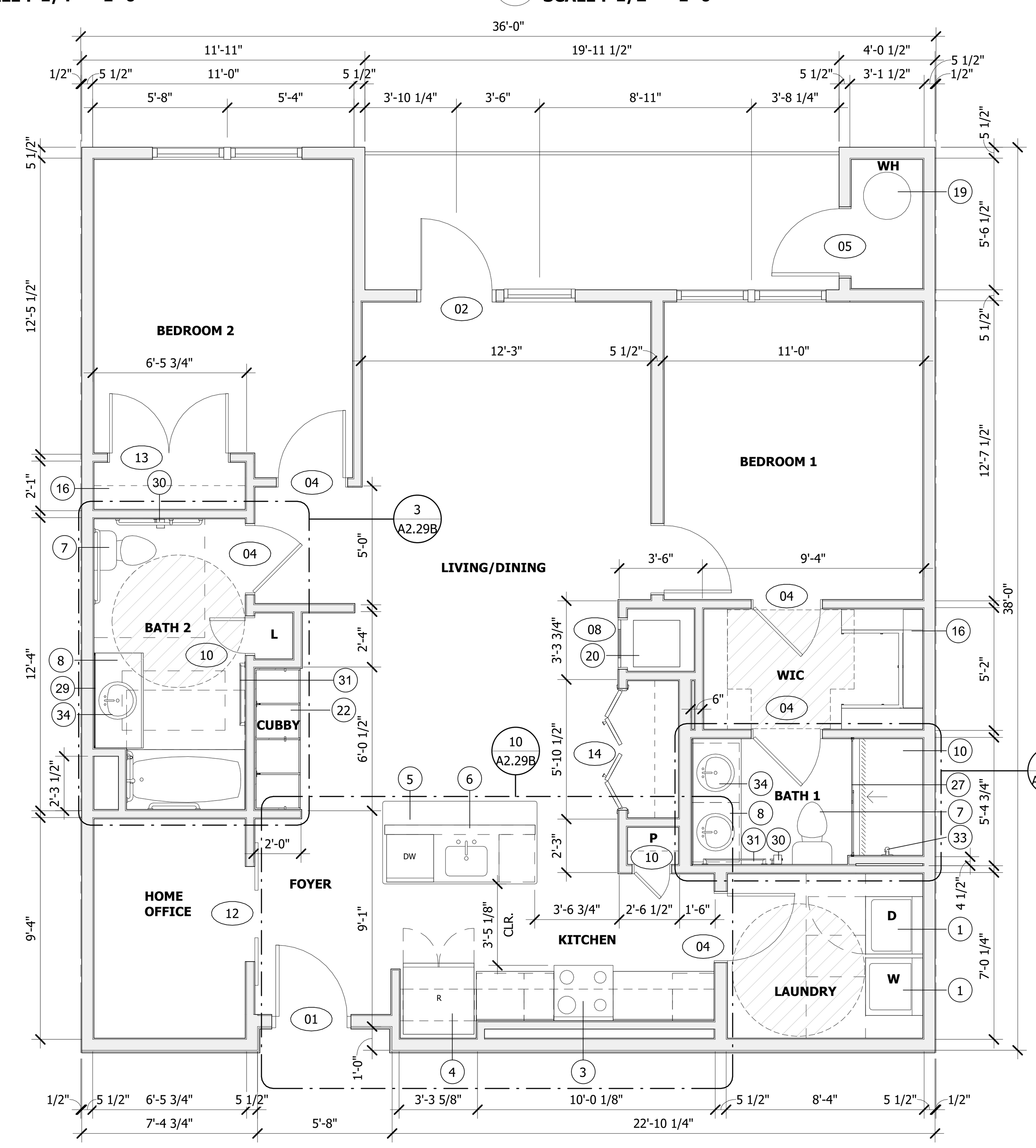


1 UNIT - C TYPE A
SCALE : 1/4" = 1'-0"

| Unit-C | 1,242 SF |
|---|---|

ALL REPORTS, PLANS, SPECIFICATIONS AND COMPUTER FILES RELATING TO THIS PROJECT ARE THE PROPERTY OF THE MARTIN ARCHITECTURAL GROUP. THE MARTIN ARCHITECTURAL GROUP RETAINS ALL COMMON LAW, STATUTE AND OTHER RESERVED RIGHTS INCLUDING THE COPYRIGHT THERETO. REPRODUCTION OF THE MATERIAL HEREIN OR SUBSTANTIAL USE WITHOUT WRITTEN PERMISSION OF THE MARTIN ARCHITECTURAL GROUP VIOLATES THE COPYRIGHT LAWS OF THE UNITED STATES AND WILL BE SUBJECT TO LEGAL PROSECUTION.
©2022, The Martin Architectural Group, P.C.

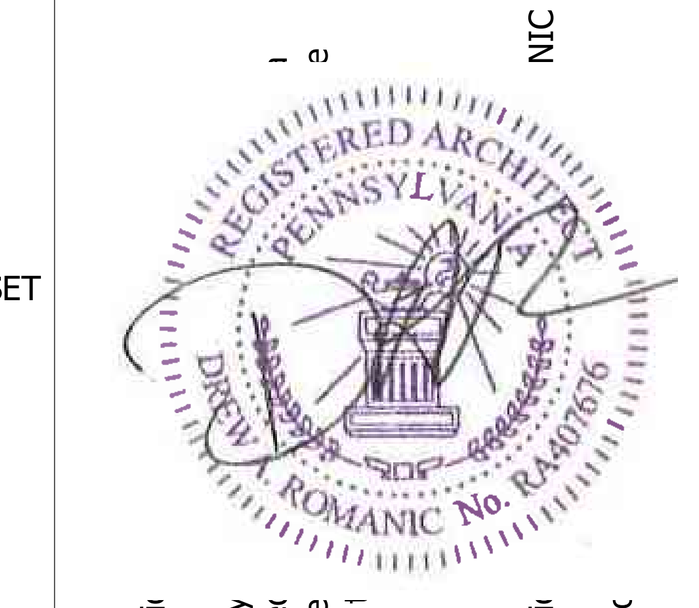


Professi
I hereby prepare duly lice laws of
Professi License Expiratio
NIC

THE MARTIN ARCHITECTURAL GROUP, P.C.
ARCHITECTS AND LAND PLANNERS
A PROFESSIONAL CORPORATION
240 NORTH 22ND STREET, PHILADELPHIA, PA, 19103
P (215) 665-1080 F (215) 561-5064

| | |
|---|---|
| P.A.: | DREW ROMANIC |
| P.M.: | JASON DECAMPLI |
| DRAWN BY: | Author |
| PROJECT NO: | 1362-12 |

| NO. | REVISION | DATE |
|---|---|---|
| 1 | PERMIT SET | 12/20/22 |

# UNIT PLAN (UNIT C TYPE A)

**Granite Run Apartment 02**

MIDDLETOWN TOWNSHIP, PA

| | |
|---|---|
| SCALE: | |
| DATE: | 12/09/22 |

# A2.29B

©2022, The Martin Architectural Group, P.C.

## LIGHT FIXTURE LEGEND - COMMON AREAS

| | |
|---|---|
| C1 | UNIT ENTRY SCONCE - TO BE SELECTED BY INTERIOR DESIGNER |
| C2 | LITHONIA FMSATL-16-20840-BN; FLUSH/ SEMI-FLUSH MOUNT |
| C3 | LITHONIA ZL1N-L48-5000LM-FST-MVOLT-40K-80CRI-WH; LED SURFACE MOUNT STRIP |
| C4 | LITHONIA 2RTL4-40L-EZB-LP840-N80; 2x4 VOLUMETRIC LIGHTING |

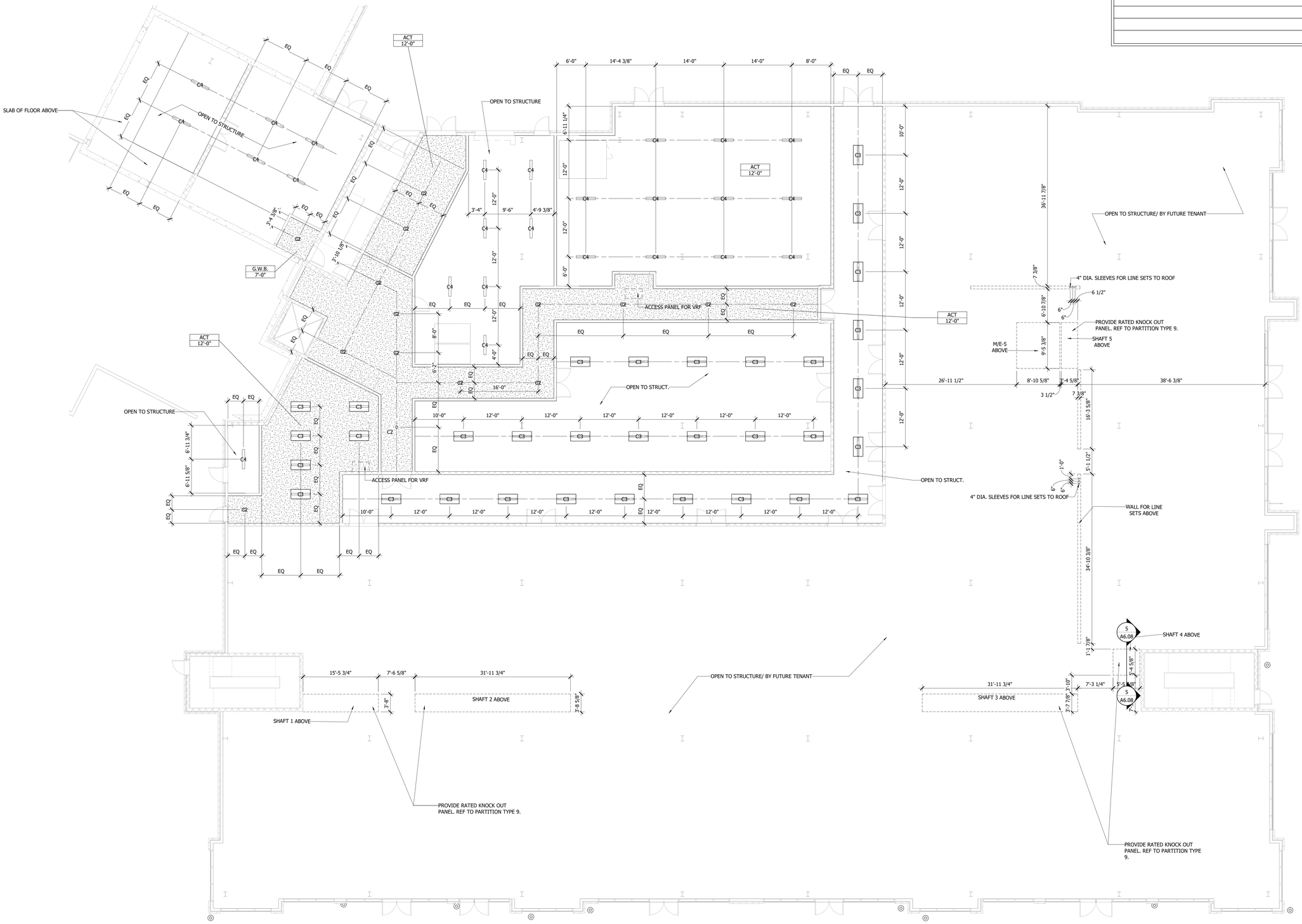


4 **RETAIL LEVEL RCP**
SCALE : 1/8" = 1'-0"


ALL REPORTS, PLANS, SPECIFICATIONS AND COMPUTER FILES RELATING TO THIS PROJECT ARE THE PROPERTY OF THE MARTIN ARCHITECTURAL GROUP. THE MARTIN ARCHITECTURAL GROUP RETAINS ALL COMMON LAW, STATUTE AND OTHER RESERVED RIGHTS INCLUDING THE COPYRIGHT THERETO. REPRODUCTION OF THE MATERIAL HEREIN OR SUBSTANTIAL USE WITHOUT WRITTEN PERMISSION OF THE MARTIN ARCHITECTURAL GROUP VIOLATES THE COPYRIGHT LAWS OF THE UNITED STATES AND WILL BE SUBJECT TO LEGAL PROSECUTION.
©2022, The Martin Architectural Group, P.C.


Professi
I hereby prepare duly lice laws of
Professi License Expiratio
NIC


THE MARTIN ARCHITECTURAL GROUP, P.C.
ARCHITECTS AND LAND PLANNERS
A PROFESSIONAL CORPORATION
240 NORTH 22ND STREET, PHILADELPHIA, PA, 19103
P (215) 665-1080 F (215) 561-5064


| | |
|---|---|
| P.A.: | DREW ROMANIC |
| P.M.: | JASON DECAMPLI |
| DRAWN BY: | Author |
| PROJECT NO: | 1362-12 |

| NO. | REVISION | DATE |
|---|---|---|
| 1 | PERMIT SET | 12/20/22 |

RETAIL LEVEL RCP
**Granite Run Apartment 02**
MIDDLETOWN TOWNSHIP, PA

SCALE:
DATE: 11/09/22

# A2.30


©2022, The Martin Architectural Group, P.C.


Printed: 1/13/2023 4:33:18 PM

## LIGHT FIXTURE LEGEND - COMMON AREAS

| | |
|---|---|
| C1 | UNIT ENTRY SCONCE - TO BE SELECTED BY INTERIOR DESIGNER |
| C2 | LITHONIA FMSATL-16-20840-BN; FLUSH/ SEMI-FLUSH MOUNT |
| C3 | LITHONIA ZL1N-L48-5000LM-FST-MVOLT-40K-80CRI-WH; LED SURFACE MOUNT STRIP |
| C4 | LITHONIA 2RTL4-40L-EZB-LP840-N80; 2x4 VOLUMETRIC LIGHTING |

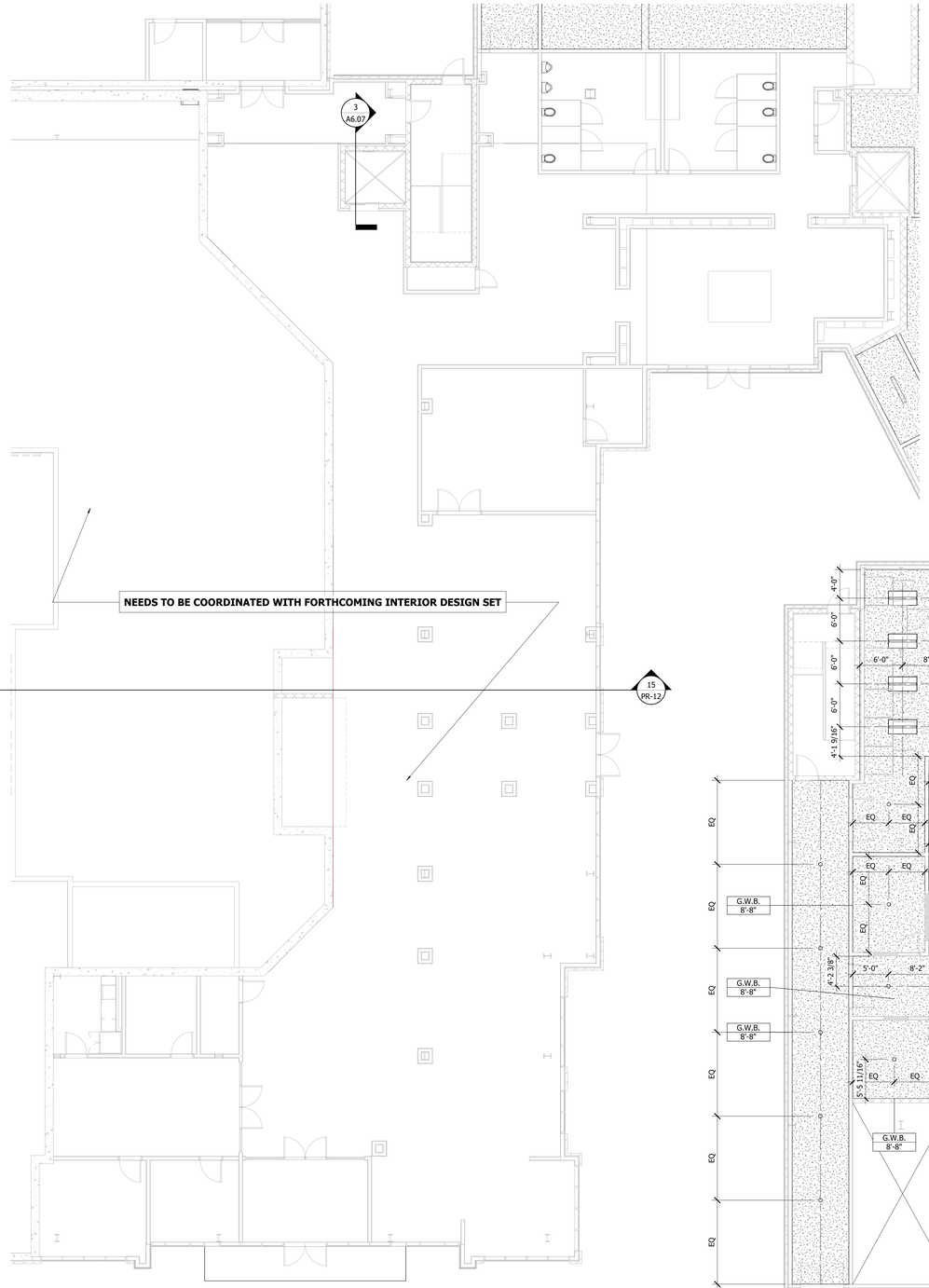


1 **CLUB LEVEL 1 (B1) RCP**
SCALE : 1/8" = 1'-0"

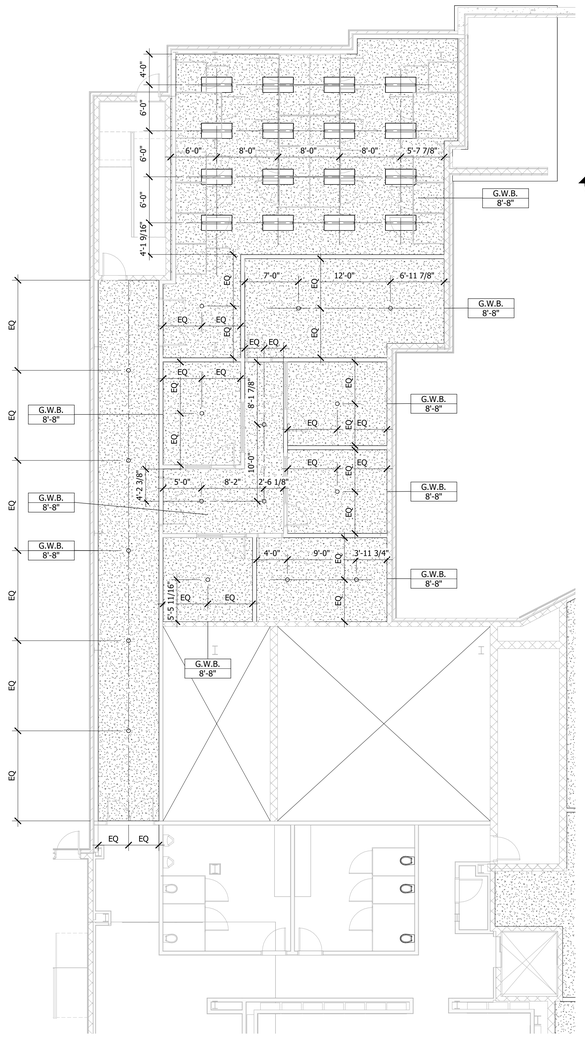


2 **CLUB LEVEL 1 (B2) RCP**
SCALE : 1/8" = 1'-0"

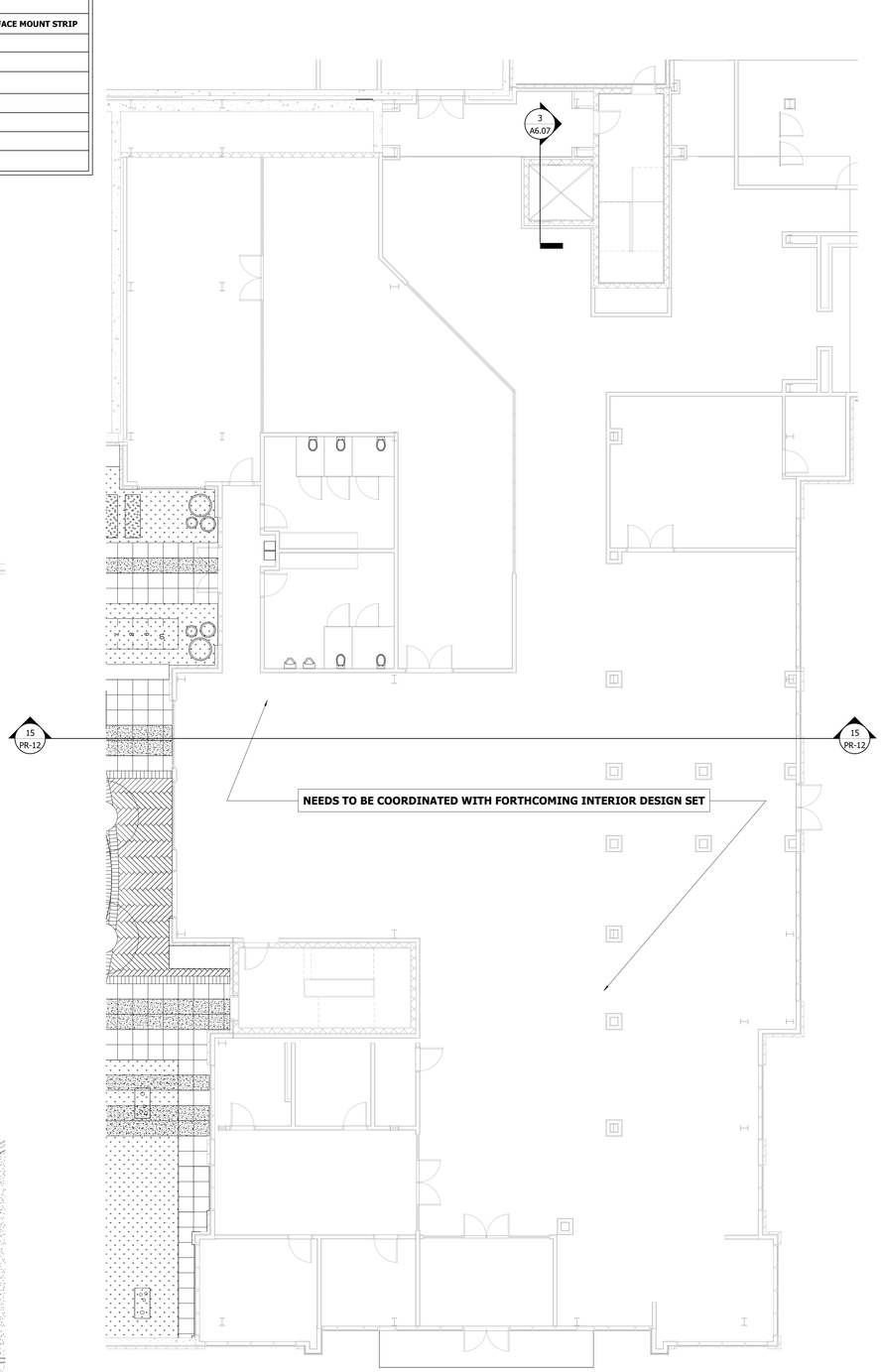


3 **CLUB LEVEL 2 RCP**
SCALE : 1/8" = 1'-0"

ALL REPORTS, PLANS, SPECIFICATIONS AND COMPUTER FILES RELATING TO THIS PROJECT ARE THE PROPERTY OF THE MARTIN ARCHITECTURAL GROUP. THE MARTIN ARCHITECTURAL GROUP RETAINS ALL COMMON LAW, STATUTE AND OTHER RESERVED RIGHTS INCLUDING THE COPY-RIGHT THERETO. REPRODUCTION OF THE MATERIAL HEREIN OR SUBSTANTIAL USE WITHOUT WRITTEN PERMISSION OF THE MARTIN ARCHITECTURAL GROUP VIOLATES THE COPYRIGHT LAWS OF THE UNITED STATES AND WILL BE SUBJECT TO LEGAL PROSECUTION.
©2022, The Martin Architectural Group, P.C.

NIC

REGISTERED ARCHITECT
COMMONWEALTH OF PENNSYLVANIA
DREW ROMANIC No. RA409178

Professi
I hereby prepare this/ac laws of

Professi License Expiratic

THE MARTIN ARCHITECTURAL GROUP, P.C.
ARCHITECTS AND LAND PLANNERS
A PROFESSIONAL CORPORATION
240 NORTH 22ND STREET, PHILADELPHIA, PA, 19103
P (215) 665-1680 F (215) 561-5064

| | |
|---|---|
| P.A.: | DREW ROMANIC |
| P.M.: | JASON DECAMPLI |
| DRAWN BY: | Author |
| PROJECT NO: | 1362-12 |

| NO. | REVISION | DATE |
|---|---|---|
| 1 | PERMIT SET | 12/30/22 |

CLUB LEVEL 1-2 RCP

**Granite Run Apartment 02**

MIDDLETOWN TOWNSHIP, PA

SCALE:

DATE: 11/09/22

**A2.31**

©2022, The Martin Architectural Group, P.C.

Printed: 1/13/2023 4:33:24 PM

| LIGHT FIXTURE LEGEND - COMMON AREAS | |
|---|---|
| C1 | UNIT ENTRY SCONCE - TO BE SELECTED BY INTERIOR DESIGNER |
| C2 | LITHONIA FMSATL-16-20840-BN; FLUSH/ SEMI-FLUSH MOUNT |
| C3 | LITHONIA ZL1N-L48-5000LM-FST-MVOLT-40K-80CRI-WH; LED SURFACE MOUNT STRIP |
| C4 | LITHONIA 2RTL4-40L-EZB-LP840-N80; 2x4 VOLUMETRIC LIGHTING |




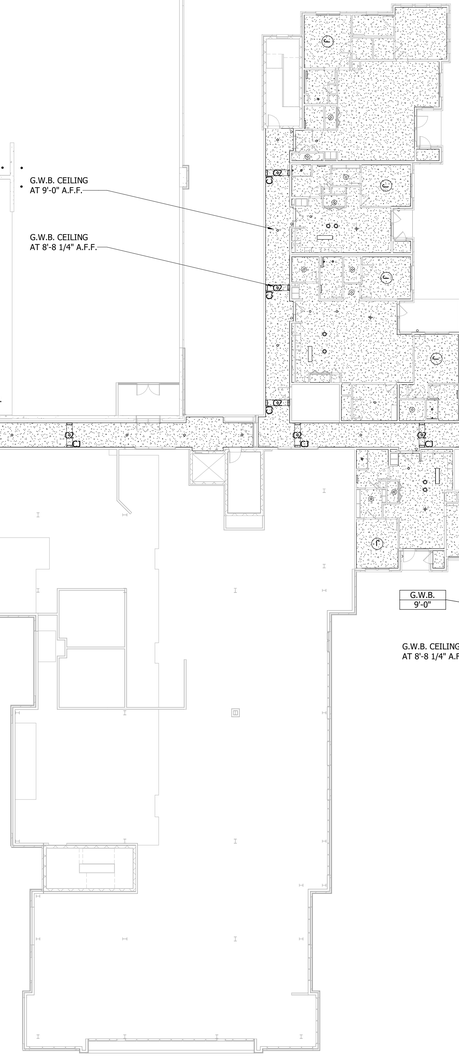


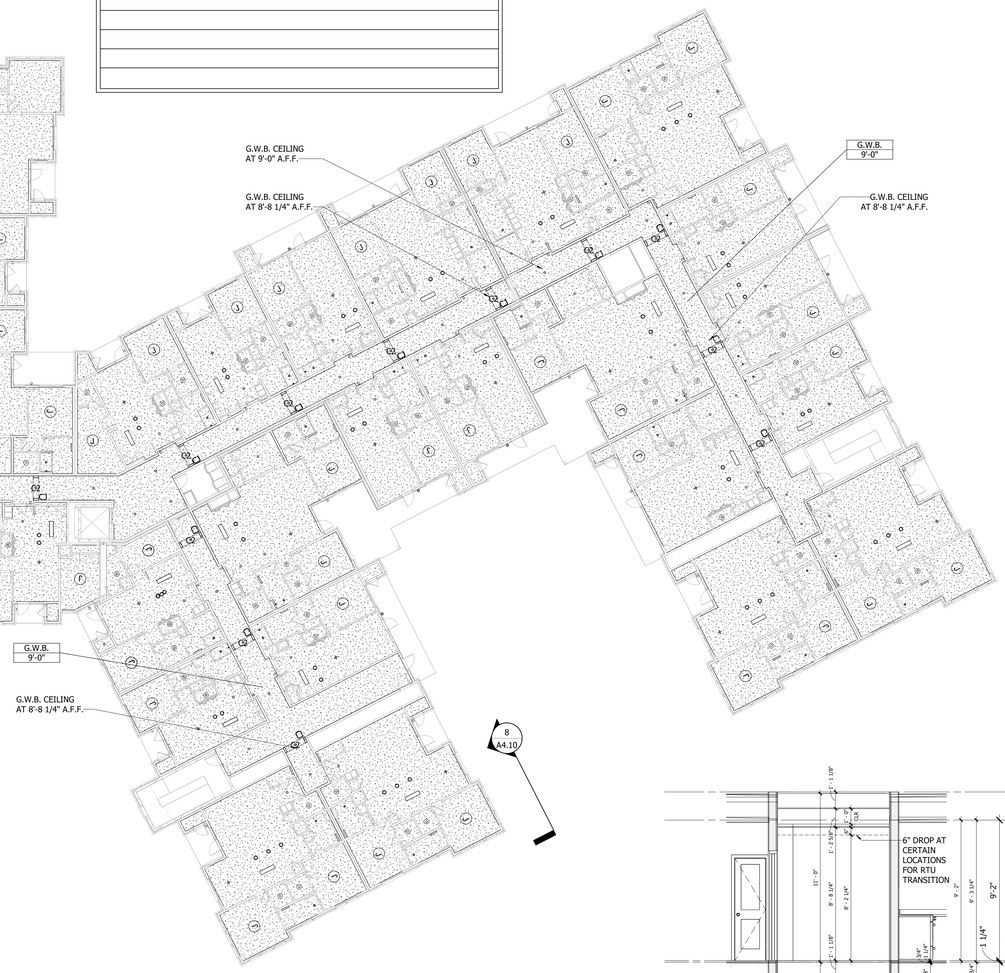


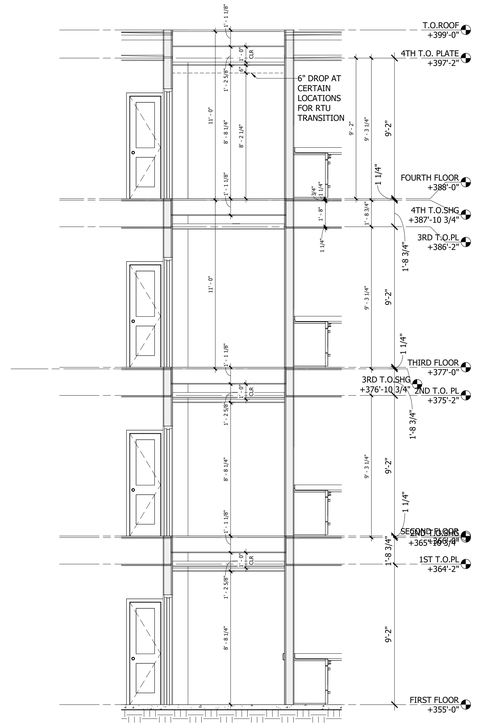


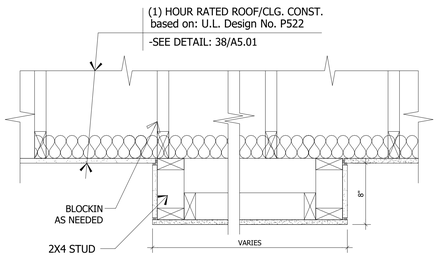


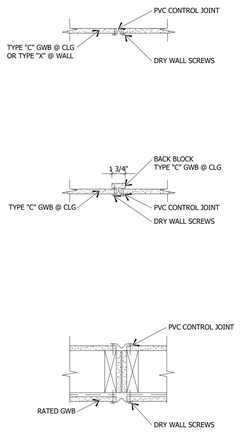


**1 FIRST FLOOR RCP**
SCALE : 1/16" = 1'-0"

**2 REFLECTED CEILING DETAIL**
SCALE : 1 1/2" = 1'-0"

**3 CONTROL JOINT DETAILS**
SCALE : 1 1/2" = 1'-0"

**4 TYP. SECTION THROUGH CORR. BUMP OUT**
SCALE : 1/4" = 1'-0"

ALL REPORTS, PLANS, SPECIFICATIONS AND COMPUTER FILES RELATING TO THIS PROJECT ARE THE PROPERTY OF THE MARTIN ARCHITECTURAL GROUP. THE MARTIN ARCHITECTURAL GROUP RETAINS ALL COMMON LAW, STATUTE AND OTHER RESERVED RIGHTS INCLUDING THE COPY-RIGHT THERETO. REPRODUCTION OF THE MATERIAL HEREIN OR SUBSTANTIAL USE WITHOUT WRITTEN PERMISSION OF THE MARTIN ARCHITECTURAL GROUP VIOLATES THE COPYRIGHT LAWS OF THE UNITED STATES AND WILL BE SUBJECT TO LEGAL PROSECUTION.
©2022, The Martin Architectural Group, P.C.

REGISTERED ARCHITECT COMMONWEALTH OF PENNSYLVANIA DREW ROMANIC No. RA-020115

Professi
I hereby prepare drw/ac laws of

Professi License Expirati

THE MARTIN ARCHITECTURAL GROUP, P.C.
ARCHITECTS AND LAND PLANNERS
A PROFESSIONAL CORPORATION
240 NORTH 22ND STREET, PHILADELPHIA, PA, 19103
P (215) 665-1680 F (215) 561-5064

| | |
|---|---|
| P.A.: | DREW ROMANIC |
| P.M.: | JASON DECAMPLI |
| DRAWN BY: | MAG |
| PROJECT NO: | 1362-12 |

| NO. | REVISION | DATE |
|---|---|---|
| 1 | PERMIT SET | 12/20/22 |

FIRST FLOOR REFLECTED CEILING PLAN

**Granite Run Apartment 02**

MIDDLETOWN TOWNSHIP, PA

| | |
|---|---|
| SCALE: | AS NOTED |
| DATE: | 12/31/2017 |

**A2.32**

©2022, The Martin Architectural Group, P.C.

Printed: 1/13/2023 4:33:42 PM




## 1 SECOND FLOOR RCP
**SCALE : 1/16" = 1'-0"**

| LIGHT FIXTURE LEGEND - COMMON AREAS | |
|---|---|
| C1 | UNIT ENTRY SCONCE - TO BE SELECTED BY INTERIOR DESIGNER |
| C2 | LITHONIA FMSATL-16-20840-BN; FLUSH/ SEMI-FLUSH MOUNT |
| C3 | LITHONIA ZL1N-L48-5000LM-FST-MVOLT-40K-80CRI-WH; LED SURFACE MOUNT STRIP |
| C4 | LITHONIA 2RTL4-40L-EZB-LP840-N80; 2x4 VOLUMETRIC LIGHTING |
| | |
| | |
| | |
| | |
| | |
| | |

ALL REPORTS, PLANS, SPECIFICATIONS AND COMPUTER FILES RELATING TO THIS PROJECT ARE THE PROPERTY OF THE MARTIN ARCHITECTURAL GROUP. THE MARTIN ARCHITECTURAL GROUP RETAINS ALL COMMON LAW, STATUTE AND OTHER RESERVED RIGHTS INCLUDING THE COPYRIGHT THERETO. REPRODUCTION OF THE MATERIAL HEREIN OR SUBSTANTIAL USE WITHOUT WRITTEN PERMISSION OF THE MARTIN ARCHITECTURAL GROUP VIOLATES THE COPYRIGHT LAWS OF THE UNITED STATES AND WILL BE SUBJECT TO LEGAL PROSECUTION.
©2022, The Martin Architectural Group, P.C.

NIC

REGISTERED ARCHITECT
COMMONWEALTH OF PENNSYLVANIA
DREW ROMANIC No. RA409015

Professi
I hereby prepare this/ do/ laws of

Professi
License Expirati

**THE MARTIN ARCHITECTURAL GROUP, P.C.**
**ARCHITECTS AND LAND PLANNERS**
A PROFESSIONAL CORPORATION
**240 NORTH 22ND STREET, PHILADELPHIA, PA, 19103**
**P (215) 665-1080 F (215) 561-5064**

| | |
|---|---|
| P.A.: | DREW ROMANIC |
| P.M.: | JASON DECAMPLI |
| DRAWN BY: | MAG |
| PROJECT NO: | 1362-12 |

| NO. | REVISION | DATE |
|---|---|---|
| 1 | PERMIT SET | 12/20/22 |

SECOND FLOOR REFLECTED CEILING PLAN

**Granite Run Apartment 02**

MIDDLETOWN TOWNSHIP, PA

| | |
|---|---|
| SCALE: | AS NOTED |
| DATE: | 12/31/2017 |

**A2.33**

©2022, The Martin Architectural Group, P.C.

Printed: 1/13/2023 4:34:01 PM




1 THIRD FLOOR RCP
SCALE : 1/16" = 1'-0"

| LIGHT FIXTURE LEGEND - COMMON AREAS | |
|---|---|
| C1 | UNIT ENTRY SCONCE - TO BE SELECTED BY INTERIOR DESIGNER |
| C2 | LITHONIA FMSATL-16-20840-BN; FLUSH/ SEMI-FLUSH MOUNT |
| C3 | LITHONIA ZL1N-L48-5000LM-FST-MVOLT-40K-80CRI-WH; LED SURFACE MOUNT STRIP |
| C4 | LITHONIA 2RTL4-40L-EZB-LP840-N80; 2x4 VOLUMETRIC LIGHTING |


ALL REPORTS, PLANS, SPECIFICATIONS AND COMPUTER FILES RELATING TO THIS PROJECT ARE THE PROPERTY OF THE MARTIN ARCHITECTURAL GROUP. THE MARTIN ARCHITECTURAL GROUP RETAINS ALL COMMON LAW, STATUTE AND OTHER RESERVED RIGHTS INCLUDING THE COPYRIGHT THERETO. REPRODUCTION OF THE MATERIAL HEREIN OR SUBSTANTIAL USE WITHOUT WRITTEN PERMISSION OF THE MARTIN ARCHITECTURAL GROUP VIOLATES THE COPYRIGHT LAWS OF THE UNITED STATES AND WILL BE SUBJECT TO LEGAL PROSECUTION.
©2022, The Martin Architectural Group, P.C.


Professi
I hereby
prepare
duly lic
laws of

Professi
License
Expiratic

NIC


THE MARTIN ARCHITECTURAL GROUP, P.C.
ARCHITECTS AND LAND PLANNERS
A PROFESSIONAL CORPORATION
240 NORTH 22ND STREET, PHILADELPHIA, PA, 19103
P (215) 665-1080 F (215) 561-5064


| | |
|---|---|
| P.A.: | DREW ROMANIC |
| P.M.: | JASON DECAMPLI |
| DRAWN BY: | MAG |
| PROJECT NO: | 1362-12 |

| NO. | REVISION | DATE |
|---|---|---|
| 1 | PERMIT SET | 12/20/22 |

THIRD FLOOR REFLECTED CEILING PLAN

**Granite Run Apartment 02**

MIDDLETOWN TOWNSHIP, PA

| | |
|---|---|
| SCALE: | AS NOTED |
| DATE: | 12/31/2017 |

# A2.34


©2022, The Martin Architectural Group, P.C.


Printed: 1/13/2023 4:34:19 PM

ALL REPORTS, PLANS, SPECIFICATIONS AND COMPUTER FILES RELATING TO THIS PROJECT ARE THE PROPERTY OF THE MARTIN ARCHITECTURAL GROUP. THE MARTIN ARCHITECTURAL GROUP RETAINS ALL COMMON LAW, STATUTE AND OTHER RESERVED RIGHTS INCLUDING THE COPYRIGHT THERETO. REPRODUCTION OF THE MATERIAL HEREIN OR SUBSTANTIAL USE WITHOUT WRITTEN PERMISSION OF THE MARTIN ARCHITECTURAL GROUP VIOLATES THE COPYRIGHT LAWS OF THE UNITED STATES AND WILL BE SUBJECT TO LEGAL PROSECUTION.
©2022, The Martin Architectural Group, P.C.

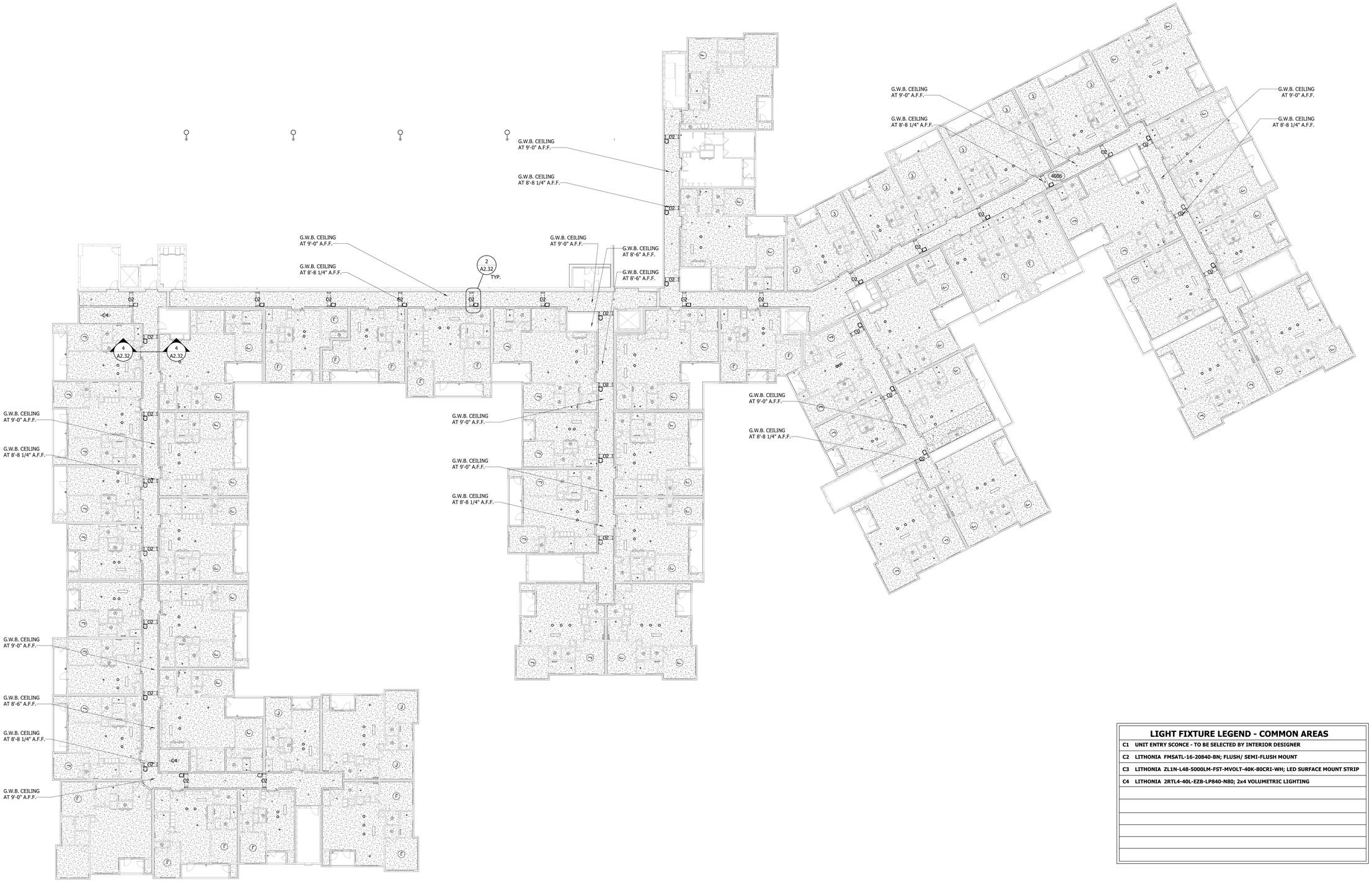


## LIGHT FIXTURE LEGEND - COMMON AREAS

| | |
|---|---|
| C1 | UNIT ENTRY SCONCE - TO BE SELECTED BY INTERIOR DESIGNER |
| C2 | LITHONIA FMSATL-16-20840-BN; FLUSH/ SEMI-FLUSH MOUNT |
| C3 | LITHONIA ZL1N-L48-5000LM-FST-MVOLT-40K-80CRI-WH; LED SURFACE MOUNT STRIP |
| C4 | LITHONIA 2RTL4-40L-EZB-LP840-N80; 2x4 VOLUMETRIC LIGHTING |

**1 FOURTH FLOOR RCP**
**SCALE : 1/16" = 1'-0"**

THE MARTIN ARCHITECTURAL GROUP, P.C.
ARCHITECTS AND LAND PLANNERS
A PROFESSIONAL CORPORATION
240 NORTH 22ND STREET, PHILADELPHIA, PA, 19103
P (215) 665-1680 F (215) 561-5064

Professi
I hereby prepare this w laws of

Professi License Expiratic

| NO. | REVISION | DATE |
|---|---|---|
| 1 | PERMIT SET | 12/20/22 |

| | |
|---|---|
| P.A.: | DREW ROMANIC |
| P.M.: | JASON DECAMPLI |
| DRAWN BY: | Author |
| PROJECT NO: | 1362-12 |

# FOURTH FLOOR REFLECTED CEILING PLAN
## Granite Run Apartment 02

MIDDLETOWN TOWNSHIP, PA

SCALE:
DATE: 11/09/22

**A2.35**

©2022, The Martin Architectural Group, P.C.

Printed: 1/13/2023 4:34:38 PM




**BUILDING KEY PLAN**
SCALE : 1/64" = 1'-0"

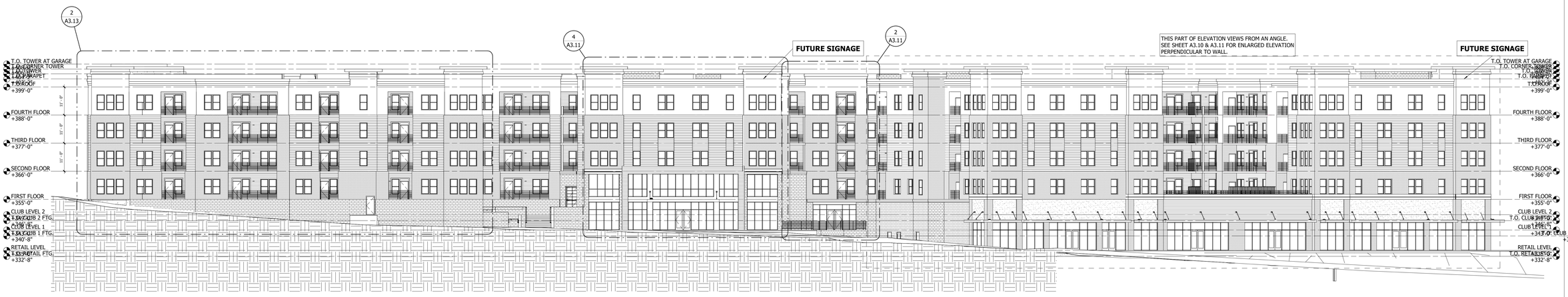


**1 SOUTH ELEVATION - OVERALL**
SCALE : 1/16" = 1'-0"

## GARAGE
## (NOT INCLUDED IN THIS SUBMISSION)




**2 WEST ELEVATION - OVERALL**
SCALE : 1/16" = 1'-0"

ALL REPORTS, PLANS, SPECIFICATIONS AND COMPUTER FILES RELATING TO THIS PROJECT ARE THE PROPERTY OF THE MARTIN ARCHITECTURAL GROUP. THE MARTIN ARCHITECTURAL GROUP RETAINS ALL COMMON LAW, STATUTE AND OTHER RESERVED RIGHTS INCLUDING THE COPYRIGHT THERETO. REPRODUCTION OF THE MATERIAL HEREIN OR SUBSTANTIAL USE WITHOUT WRITTEN PERMISSION OF THE MARTIN ARCHITECTURAL GROUP VIOLATES THE COPYRIGHT LAWS OF THE UNITED STATES AND WILL BE SUBJECT TO LEGAL PROSECUTION.
©2022, The Martin Architectural Group, P.C.




Professi
I hereby prepare duly lice laws of
Professi License Expiratic
NIC

THE MARTIN ARCHITECTURAL GROUP, P.C.
ARCHITECTS AND LAND PLANNERS
A PROFESSIONAL CORPORATION
240 NORTH 22ND STREET, PHILADELPHIA, PA, 19103
P (215) 665-1080 F (215) 561-5064

| | |
|---|---|
| P.A.: | DREW ROMANIC |
| P.M.: | JASON DECAMPLI |
| DRAWN BY: | MAG |
| PROJECT NO: | 1362-12 |

| NO. | REVISION | DATE |
|---|---|---|
| 1 | PERMIT SET | 12/20/22 |

ELEVATIONS
**Granite Run Apartment 02**
MIDDLETOWN TOWNSHIP, PA

| | |
|---|---|
| SCALE: | AS NOTED |
| DATE: | 12/31/2017 |

# A3.01

©2022, The Martin Architectural Group, P.C.

Printed: 1/13/2023 4:36:00 PM

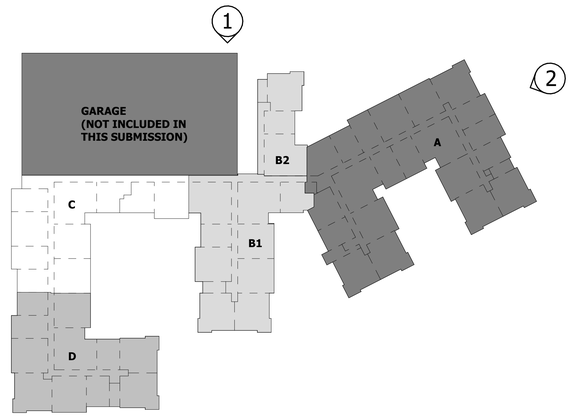


**BUILDING KEY PLAN**
SCALE : 1/64" = 1'-0"

# GARAGE (NOT INCLUDED IN THIS SUBMISSION)

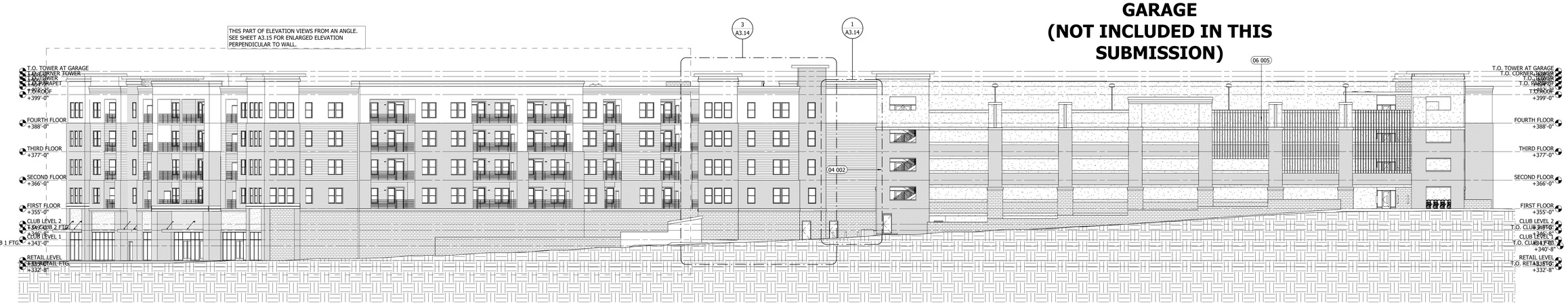


**1 NORTH ELEVATION - OVERALL**
SCALE : 1/16" = 1'-0"




**2 EAST ELEVATION - OVERALL**
SCALE : 1/16" = 1'-0"

**KEYNOTE LEGEND**

| MARK | DESCRIPTION |
|---|---|
| 03 003 | DECORATIVE PRECAST PANEL |
| 03 004 | DECORATIVE PRECAST BAND |
| 04 002 | GLEN GERY THIN BRICK VENEER - COLOR: ANTIETAM |
| 04 003 | FIZZANO ARCHITECTURAL BLOCK - COLOR: F-517 |
| 04 004 | GLEN GERY FULL BRICK VENEER - COLOR: ANTIETAM |
| 04 005 | FIZZANO ARCHITECTURAL SILL SFS-14 - COLOR: F-518 |
| 04 006 | FIZZANO ARCHITECTURAL SILL S-4 - COLOR: F-518 |
| 06 001 | ALLURA SMOOTH SIDING - COLOR: STERLING GRAY |
| 06 002 | ALLURA SMOOTH PANEL - COLOR: STERLING GRAY |
| 06 003 | ALLURA SMOOTH PANEL - COLOR: FLAGSTONE |
| 06 004 | NICHIHA VINTAGE WOOD PANEL - COLOR: CEDAR |
| 06 005 | VERTICAL 2X8 KNOTWOOD BATTEN (OR EQ.) KEB20050F |
| 06 006 | ALLURA 5/4 TRIM - COLOR: FLAGSTONE |
| 07 001 | PAC-CLAD METAL PANEL - COLOR: BLACK ALUMINUM |
| 07 002 | DRYVIT EIFS VENEER - COLOR: SMOKE SIGNAL |

ALL REPORTS, PLANS, SPECIFICATIONS AND COMPUTER FILES RELATING TO THIS PROJECT ARE THE PROPERTY OF THE MARTIN ARCHITECTURAL GROUP. THE MARTIN ARCHITECTURAL GROUP RETAINS ALL COMMON LAW, STATUTE AND OTHER RESERVED RIGHTS INCLUDING THE COPY-RIGHT THERETO. REPRODUCTION OF THE MATERIAL HEREIN OR SUBSTANTIAL USE WITHOUT WRITTEN PERMISSION OF THE MARTIN ARCHITECTURAL GROUP VIOLATES THE COPYRIGHT LAWS OF THE UNITED STATES AND WILL BE SUBJECT TO LEGAL PROSECUTION.
©2022, The Martin Architectural Group, P.C.

REGISTERED ARCHITECT COMMONWEALTH OF PENNSYLVANIA DREW ROMANIC No. RA405115

THE MARTIN ARCHITECTURAL GROUP, P.C.
ARCHITECTS AND LAND PLANNERS
A PROFESSIONAL CORPORATION
240 NORTH 22ND STREET, PHILADELPHIA, PA, 19103
P (215) 665-1680 F (215) 561-5064

| | |
|---|---|
| P.A.: | DREW ROMANIC |
| P.M.: | JASON DECAMPLI |
| DRAWN BY: | Author |
| PROJECT NO: | 1362-12 |

| NO. | REVISION | DATE |
|---|---|---|
| 1 | PERMIT SET | 12/20/22 |

ELEVATIONS
**Granite Run Apartment 02**
MIDDLETOWN TOWNSHIP, PA

SCALE:
DATE: 06/17/22

**A3.02**

©2022, The Martin Architectural Group, P.C.

Printed: 1/13/2023 4:36:36 PM

| KEYNOTE LEGEND | |
|---|---|
| MARK | DESCRIPTION |
| 03 003 | DECORATIVE PRECAST PANEL |
| 03 004 | DECORATIVE PRECAST BAND |
| 04 002 | GLEN GERY THIN BRICK VENEER - COLOR: ANTIETAM |
| 04 003 | FIZZANO ARCHITECTURAL BLOCK - COLOR: F-517 |
| 04 004 | GLEN GERY FULL BRICK VENEER - COLOR: ANTIETAM |
| 04 005 | FIZZANO ARCHITECTURAL SILL SF5-14 - COLOR: F-518 |
| 04 006 | FIZZANO ARCHITECTURAL SILL S-4 - COLOR: F-518 |
| 06 001 | ALLURA SMOOTH SIDING - COLOR: STERLING GRAY |
| 06 002 | ALLURA SMOOTH PANEL - COLOR: STERLING GRAY |
| 06 003 | ALLURA SMOOTH PANEL - COLOR: FLAGSTONE |
| 06 004 | NICHIHA VINTAGE WOOD PANEL - COLOR: CEDAR |
| 06 005 | VERTICAL 2X8 KNOTWOOD BATTEN (OR EQ.) KEB20050F |
| 06 006 | ALLURA 5/4 TRIM - COLOR: FLAGSTONE |
| 07 001 | PAC-CLAD METAL PANEL - COLOR: BLACK ALUMINUM |
| 07 002 | DRYVIT EIFS VENEER - COLOR: SMOKE SIGNAL |

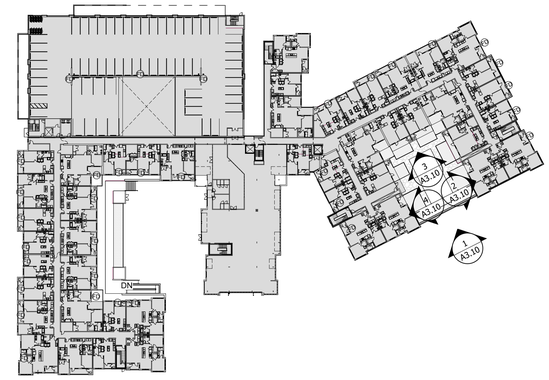





## 4 RETAIL COURTYARD - WEST
**SCALE : 1/8" = 1'-0"**




## 3 RETAIL COURTYARD - NORTH
**SCALE : 1/8" = 1'-0"**




## 2 RETAIL COURTYARD - EAST
**SCALE : 1/8" = 1'-0"**

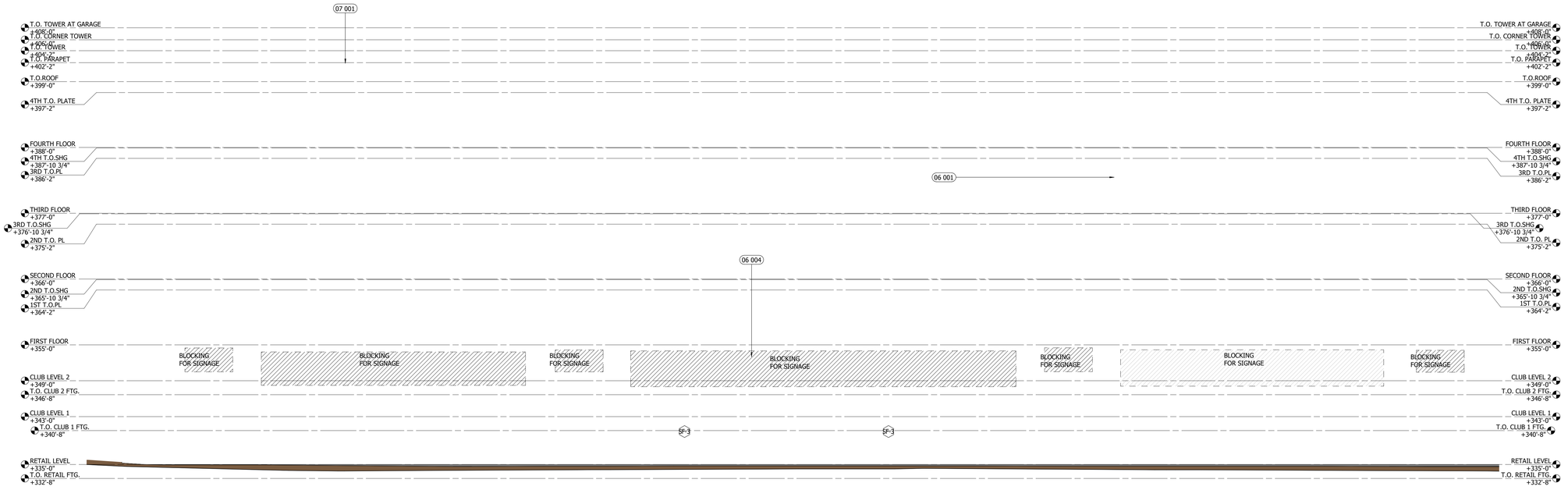


## 1 SOUTH ELEVATION - RETAIL
**SCALE : 1/8" = 1'-0"**

ALL REPORTS, PLANS, SPECIFICATIONS AND COMPUTER FILES RELATING TO THIS PROJECT ARE THE PROPERTY OF THE MARTIN ARCHITECTURAL GROUP. THE MARTIN ARCHITECTURAL GROUP RETAINS ALL COMMON LAW, STATUTE AND OTHER RESERVED RIGHTS INCLUDING THE COPY-RIGHT THERETO. REPRODUCTION OF THE MATERIAL HEREIN OR SUBSTANTIAL USE WITHOUT WRITTEN PERMISSION OF THE MARTIN ARCHITECTURAL GROUP VIOLATES THE COPYRIGHT LAWS OF THE UNITED STATES AND WILL BE SUBJECT TO LEGAL PROSECUTION.
©2022, The Martin Architectural Group, P.C.

REGISTERED ARCHITECT COMMONWEALTH OF PENNSYLVANIA DREW ROMANIC No. RA009178

THE MARTIN ARCHITECTURAL GROUP, P.C.
ARCHITECTS AND LAND PLANNERS
A PROFESSIONAL CORPORATION
240 NORTH 22ND STREET, PHILADELPHIA, PA, 19103
P (215) 665-1600 F (215) 561-5064

| | |
|---|---|
| P.A.: | DREW ROMANIC |
| P.M.: | JASON DECAMPLI |
| DRAWN BY: | Author |
| PROJECT NO: | 1362-12 |

| NO. | REVISION | DATE |
|---|---|---|
| 1 | PERMIT SET | 12/20/22 |

# ENLARGED ELEVATIONS
## Granite Run Apartment 02
MIDDLETOWN TOWNSHIP, PA

SCALE:
DATE: 09/30/22

# A3.10

©2022, The Martin Architectural Group, P.C.

Printed: 1/13/2023 4:36:57 PM

| KEYNOTE LEGEND | | |
|---|---|---|
| MARK | DESCRIPTION | |
| | | |
| 03 003 | DECORATIVE PRECAST PANEL | |
| 03 004 | DECORATIVE PRECAST BAND | |
| 04 002 | GLEN GERY THIN BRICK VENEER - COLOR: ANTIETAM | |
| 04 003 | FIZZANO ARCHITECTURAL BLOCK - COLOR: F-517 | |
| 04 004 | GLEN GERY FULL BRICK VENEER - COLOR: ANTIETAM | |
| 04 005 | FIZZANO ARCHITECTURAL SILL SPS-14 - COLOR: F-518 | |
| 04 006 | FIZZANO ARCHITECTURAL SILL S-4 - COLOR: F-518 | |
| 06 001 | ALLURA SMOOTH SIDING - COLOR: STERLING GRAY | |
| 06 002 | ALLURA SMOOTH PANEL - COLOR: STERLING GRAY | |
| 06 003 | ALLURA SMOOTH PANEL - COLOR: FLAGSTONE | |
| 06 004 | NICHIHA VINTAGE WOOD PANEL - COLOR: CEDAR | |
| 06 005 | VERTICAL 2X8 KNOTWOOD BATTEN (OR EQ.) KEB20050F | |
| 06 006 | ALLURA 5/4 TRIM - COLOR: FLAGSTONE | |
| 07 001 | PAC-CLAD METAL PANEL - COLOR: BLACK ALUMINUM | |
| 07 002 | DRYVIT EIFS VENEER - COLOR: SMOKE SIGNAL | |

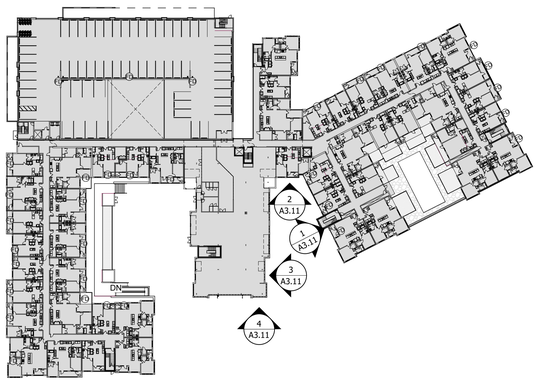


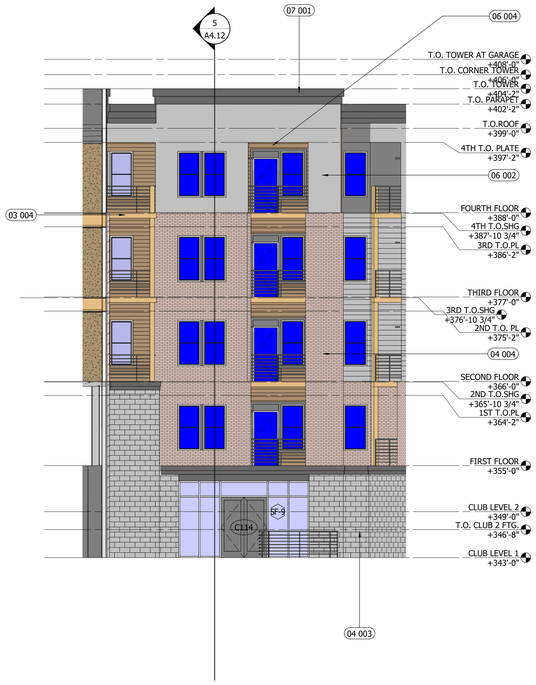


## 2 MIDDLE COURTYARD - NORTH
SCALE : 1/8" = 1'-0"




## 1 MIDDLE COURTYARD - EAST
SCALE : 1/8" = 1'-0"




## 4 SOUTH ELEVATION - CLUBHOUSE
SCALE : 1/8" = 1'-0"




## 3 MIDDLE COURTYARD - WEST
SCALE : 1/8" = 1'-0"

ALL REPORTS, PLANS, SPECIFICATIONS AND COMPUTER FILES RELATING TO THIS PROJECT ARE THE PROPERTY OF THE MARTIN ARCHITECTURAL GROUP. THE MARTIN ARCHITECTURAL GROUP RETAINS ALL COMMON LAW, STATUTE AND OTHER RESERVED RIGHTS INCLUDING THE COPY-RIGHT THERETO. REPRODUCTION OF THE MATERIAL HEREIN OR SUBSTANTIAL USE WITHOUT WRITTEN PERMISSION OF THE MARTIN ARCHITECTURAL GROUP VIOLATES THE COPYRIGHT LAWS OF THE UNITED STATES AND WILL BE SUBJECT TO LEGAL PROSECUTION.
©2022, The Martin Architectural Group, P.C.

COMMONWEALTH OF PENNSYLVANIA REGISTERED ARCHITECT DREW ROMANIC No. RA-020015

THE MARTIN ARCHITECTURAL GROUP, P.C.
ARCHITECTS AND LAND PLANNERS
A PROFESSIONAL CORPORATION
240 NORTH 22ND STREET, PHILADELPHIA, PA, 19103
P (215) 665-1600 F (215) 561-5064

| | |
|---|---|
| P.A.: | DREW ROMANIC |
| P.M.: | JASON DECAMPLI |
| DRAWN BY: | Author |
| PROJECT NO: | 1362-12 |

| NO. | REVISION | DATE |
|---|---|---|
| 1 | PERMIT SET | 12/20/22 |

# ENLARGED ELEVATIONS
## Granite Run Apartment 02
MIDDLETOWN TOWNSHIP, PA

SCALE:
DATE: 09/30/22

# A3.11

©2022, The Martin Architectural Group, P.C.

Printed: 1/13/2023 4:37:18 PM

| KEYNOTE LEGEND | | |
|---|---|---|
| MARK | DESCRIPTION | |
| | | |
| 03 003 | DECORATIVE PRECAST PANEL | |
| 03 004 | DECORATIVE PRECAST BAND | |
| 04 002 | GLEN GERY THIN BRICK VENEER - COLOR: ANTIETAM | |
| 04 003 | FIZZANO ARCHITECTURAL BLOCK - COLOR: F-517 | |
| 04 004 | GLEN GERY FULL BRICK VENEER - COLOR: ANTIETAM | |
| 04 005 | FIZZANO ARCHITECTURAL SILL SFS-14 - COLOR: F-518 | |
| 04 006 | FIZZANO ARCHITECTURAL SILL S-4 - COLOR: F-518 | |
| 06 001 | ALLURA SMOOTH SIDING - COLOR: STERLING GRAY | |
| 06 002 | ALLURA SMOOTH PANEL - COLOR: STERLING GRAY | |
| 06 003 | ALLURA SMOOTH PANEL - COLOR: FLAGSTONE | |
| 06 004 | NICHIHA VINTAGE WOOD PANEL - COLOR: CEDAR | |
| 06 005 | VERTICAL 2X8 KNOTWOOD BATTEN (OR EQ.) KEB20050F | |
| 06 006 | ALLURA 5/4 TRIM - COLOR: FLAGSTONE | |
| 07 001 | PAC-CLAD METAL PANEL - COLOR: BLACK ALUMINUM | |
| 07 002 | DRYVIT EIFS VENEER - COLOR: SMOKE SIGNAL | |

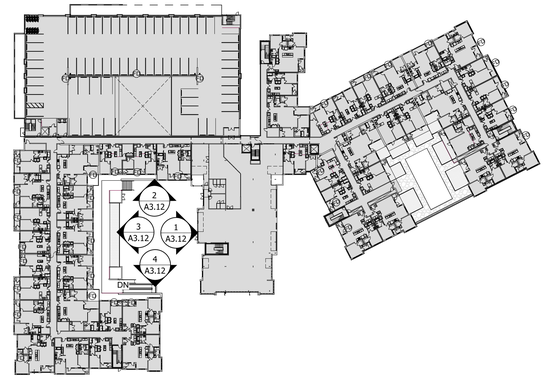





## 1 POOL COURTYARD - EAST
**SCALE : 1/8" = 1'-0"**

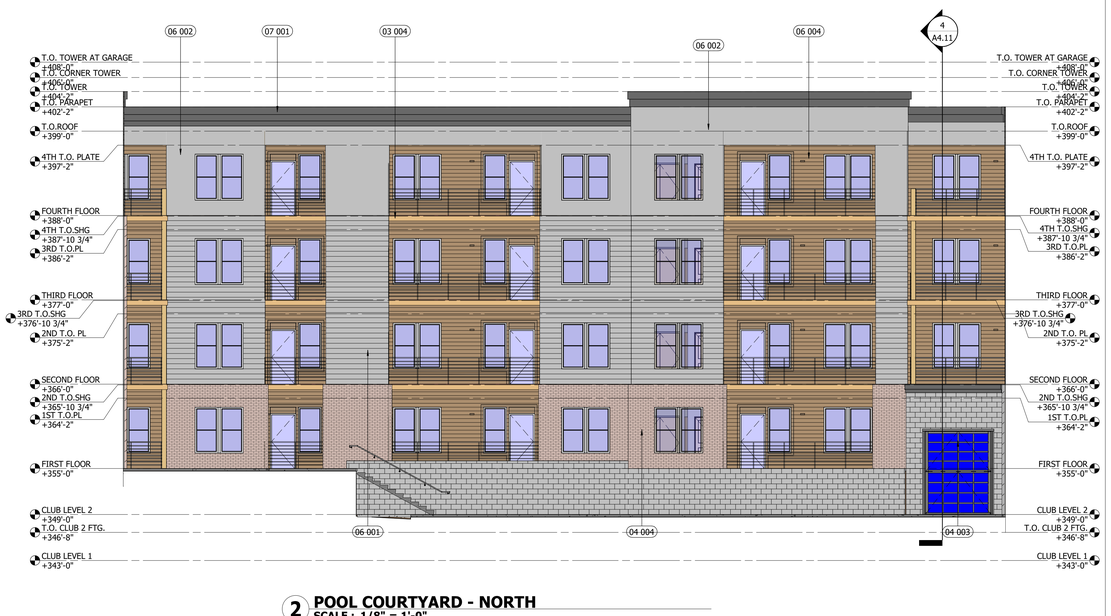


## 2 POOL COURTYARD - NORTH
**SCALE : 1/8" = 1'-0"**




## 3 POOL COURTYARD - WEST
**SCALE : 1/8" = 1'-0"**

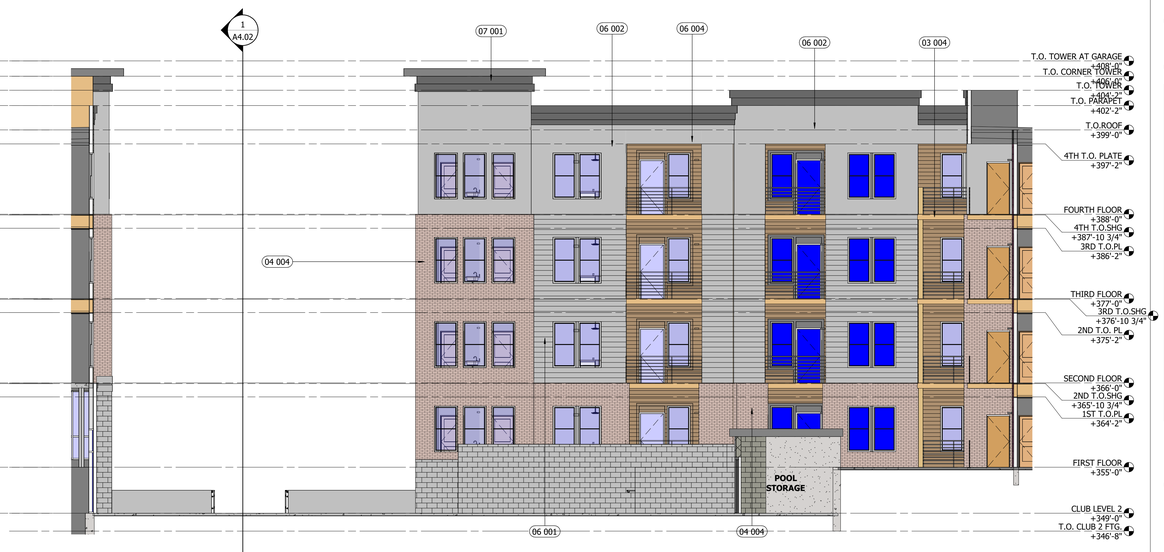


## 4 POOL COURTYARD - SOUTH
**SCALE : 1/8" = 1'-0"**

ALL REPORTS, PLANS, SPECIFICATIONS AND COMPUTER FILES RELATING TO THIS PROJECT ARE THE PROPERTY OF THE MARTIN ARCHITECTURAL GROUP. THE MARTIN ARCHITECTURAL GROUP RETAINS ALL COMMON LAW, STATUTE AND OTHER RESERVED RIGHTS INCLUDING THE COPY-RIGHT THERETO. REPRODUCTION OF THE MATERIAL HEREIN OR SUBSTANTIAL USE WITHOUT WRITTEN PERMISSION OF THE MARTIN ARCHITECTURAL GROUP VIOLATES THE COPYRIGHT LAWS OF THE UNITED STATES AND WILL BE SUBJECT TO LEGAL PROSECUTION.
©2022, The Martin Architectural Group, P.C.

REGISTERED ARCHITECT COMMONWEALTH OF PENNSYLVANIA DREW ROMANIC No. RA020915

THE MARTIN ARCHITECTURAL GROUP, P.C.
ARCHITECTS AND LAND PLANNERS
A PROFESSIONAL CORPORATION
240 NORTH 22ND STREET, PHILADELPHIA, PA, 19103
P (215) 665-1600 F (215) 561-5064

| | |
|---|---|
| P.A.: | DREW ROMANIC |
| P.M.: | JASON DECAMPLI |
| DRAWN BY: | Author |
| PROJECT NO: | 1362-12 |

| NO. | REVISION | DATE |
|---|---|---|
| 1 | PERMIT SET | 12/20/22 |

# ENLARGED ELEVATIONS
## Granite Run Apartment 02
MIDDLETOWN TOWNSHIP, PA

SCALE:
DATE: 09/30/22

# A3.12

©2022, The Martin Architectural Group, P.C.

Printed: 1/13/2023 4:37:43 PM

| KEYNOTE LEGEND | | |
|---|---|---|
| MARK | DESCRIPTION | |
| | | |
| 03 003 | DECORATIVE PRECAST PANEL | |
| 03 004 | DECORATIVE PRECAST BAND | |
| 04 002 | GLEN GERY THIN BRICK VENEER - COLOR: ANTIETAM | |
| 04 003 | FIZZANO ARCHITECTURAL BLOCK - COLOR: F-517 | |
| 04 004 | GLEN GERY FULL BRICK VENEER - COLOR: ANTIETAM | |
| 04 005 | FIZZANO ARCHITECTURAL SILL SFS-14 - COLOR: F-518 | |
| 04 006 | FIZZANO ARCHITECTURAL SILL S-4 - COLOR: F-518 | |
| 06 001 | ALLURA SMOOTH SIDING - COLOR: STERLING GRAY | |
| 06 002 | ALLURA SMOOTH PANEL - COLOR: STERLING GRAY | |
| 06 003 | ALLURA SMOOTH PANEL - COLOR: FLAGSTONE | |
| 06 004 | NICHIHA VINTAGE WOOD PANEL - COLOR: CEDAR | |
| 06 005 | VERTICAL 2X8 KNOTWOOD BATTEN (OR EQ.) KEB20050F | |
| 06 006 | ALLURA 5/4 TRIM - COLOR: FLAGSTONE | |
| 07 001 | PAC-CLAD METAL PANEL - COLOR: BLACK ALUMINUM | |
| 07 002 | DRYVIT EIFS VENEER - COLOR: SMOKE SIGNAL | |

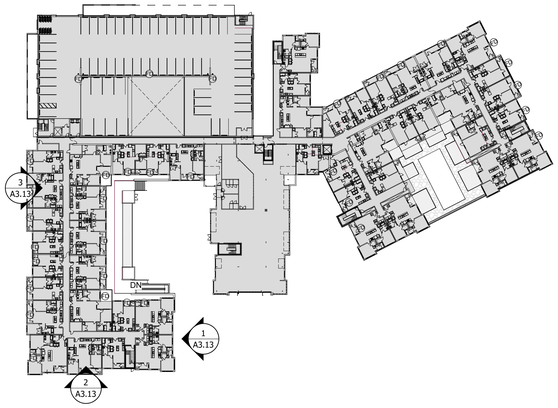





## 1 EAST ELEVATION - RES.
SCALE : 1/8" = 1'-0"




## 2 SOUTH ELEVATION - RES.
SCALE : 1/8" = 1'-0"




## 3 WEST ELEVATION - RES.
SCALE : 1/8" = 1'-0"

ALL REPORTS, PLANS, SPECIFICATIONS AND COMPUTER FILES RELATING TO THIS PROJECT ARE THE PROPERTY OF THE MARTIN ARCHITECTURAL GROUP. THE MARTIN ARCHITECTURAL GROUP RETAINS ALL COMMON LAW, STATUTE AND OTHER RESERVED RIGHTS INCLUDING THE COPY-RIGHT THERETO. REPRODUCTION OF THE MATERIAL HEREIN OR SUBSTANTIAL USE WITHOUT WRITTEN PERMISSION OF THE MARTIN ARCHITECTURAL GROUP VIOLATES THE COPYRIGHT LAWS OF THE UNITED STATES AND WILL BE SUBJECT TO LEGAL PROSECUTION.
©2022, The Martin Architectural Group, P.C.

REGISTERED ARCHITECT COMMONWEALTH OF PENNSYLVANIA DREW ROMANIC No. RA405078

THE MARTIN ARCHITECTURAL GROUP, P.C.
ARCHITECTS AND LAND PLANNERS
A PROFESSIONAL CORPORATION
240 NORTH 22ND STREET, PHILADELPHIA, PA, 19103
P (215) 665-1600 F (215) 561-5064

| | |
|---|---|
| P.A.: | DREW ROMANIC |
| P.M.: | JASON DECAMPLI |
| DRAWN BY: | Author |
| PROJECT NO: | 1362-12 |

| NO. | REVISION | DATE |
|---|---|---|
| 1 | PERMIT SET | 12/20/22 |

# ENLARGED ELEVATIONS
## Granite Run Apartment 02
MIDDLETOWN TOWNSHIP, PA

SCALE:
DATE: 09/30/22

# A3.13

©2022, The Martin Architectural Group, P.C.

Printed: 1/13/2023 4:38:06 PM

| KEYNOTE LEGEND | | |
|---|---|---|
| MARK | DESCRIPTION | |
| | | |
| 03 003 | DECORATIVE PRECAST PANEL | |
| 03 004 | DECORATIVE PRECAST BAND | |
| 04 002 | GLEN GERY THIN BRICK VENEER - COLOR: ANTIETAM | |
| 04 003 | FIZZANO ARCHITECTURAL BLOCK - COLOR: F-517 | |
| 04 004 | GLEN GERY FULL BRICK VENEER - COLOR: ANTIETAM | |
| 04 005 | FIZZANO ARCHITECTURAL SILL SFS-14 - COLOR: F-518 | |
| 04 006 | FIZZANO ARCHITECTURAL SILL S-4 - COLOR: F-518 | |
| 06 001 | ALLURA SMOOTH SIDING - COLOR: STERLING GRAY | |
| 06 002 | ALLURA SMOOTH PANEL - COLOR: STERLING GRAY | |
| 06 003 | ALLURA SMOOTH PANEL - COLOR: FLAGSTONE | |
| 06 004 | NICHIHA VINTAGE WOOD PANEL - COLOR: CEDAR | |
| 06 005 | VERTICAL 2X8 KNOTWOOD BATTEN (OR EQ.) KEB20050F | |
| 06 006 | ALLURA 5/4 TRIM - COLOR: FLAGSTONE | |
| 07 001 | PAC-CLAD METAL PANEL - COLOR: BLACK ALUMINUM | |
| 07 002 | DRYVIT EIFS VENEER - COLOR: SMOKE SIGNAL | |

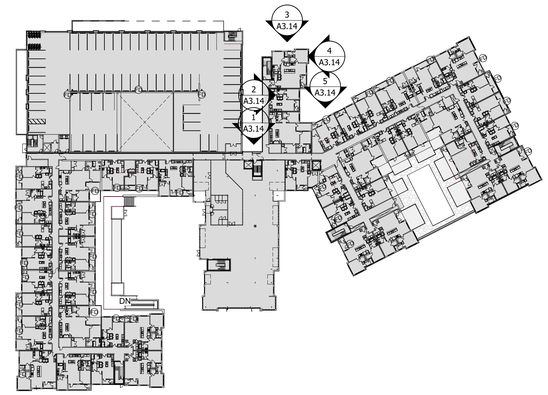


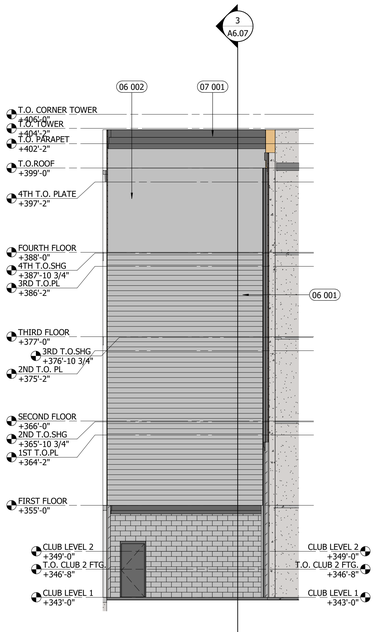


**1 SERVICE ALLEY - SOUTH**
SCALE : 1/8" = 1'-0"

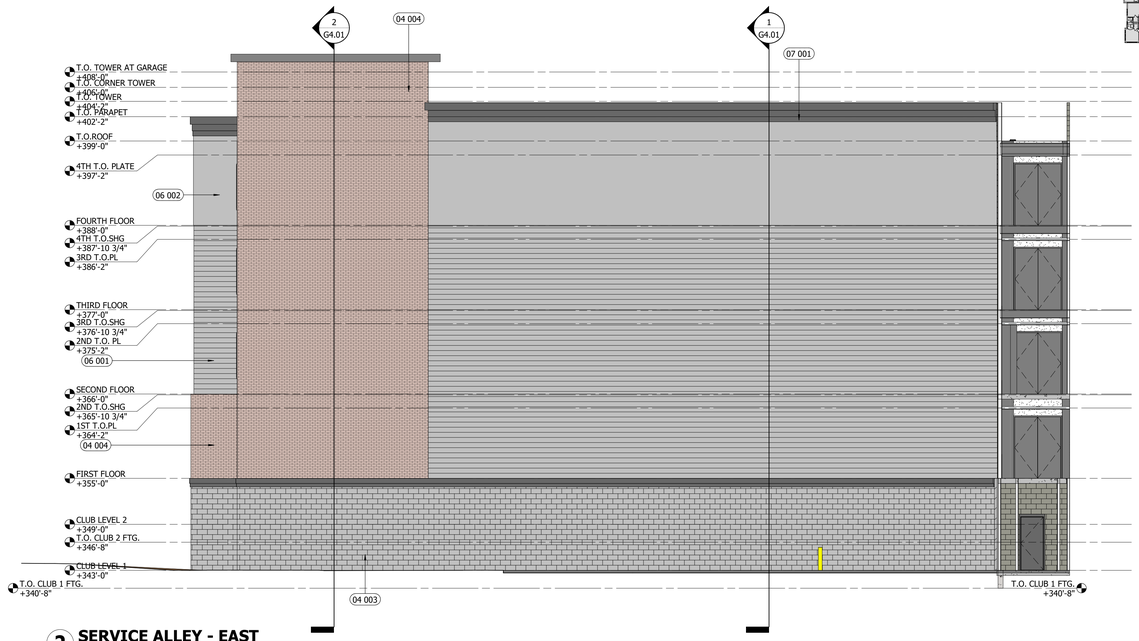


**2 SERVICE ALLEY - EAST**
SCALE : 1/8" = 1'-0"




**3 NORTH ELEVATION - RES.**
SCALE : 1/8" = 1'-0"




**4 SERVICE COURTYARD -WEST**
SCALE : 1/8" = 1'-0"

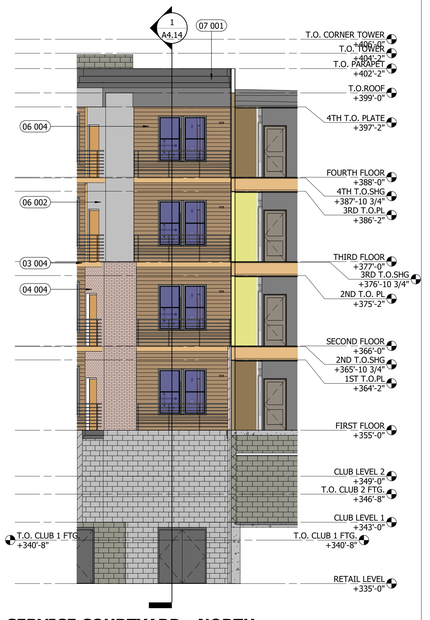


**5 SERVICE COURTYARD - NORTH**
SCALE : 1/8" = 1'-0"

ALL REPORTS, PLANS, SPECIFICATIONS AND COMPUTER FILES RELATING TO THIS PROJECT ARE THE PROPERTY OF THE MARTIN ARCHITECTURAL GROUP. THE MARTIN ARCHITECTURAL GROUP RETAINS ALL COMMON LAW, STATUTE AND OTHER RESERVED RIGHTS INCLUDING THE COPY-RIGHT THERETO. REPRODUCTION OF THE MATERIAL HEREIN OR SUBSTANTIAL USE WITHOUT WRITTEN PERMISSION OF THE MARTIN ARCHITECTURAL GROUP VIOLATES THE COPYRIGHT LAWS OF THE UNITED STATES AND WILL BE SUBJECT TO LEGAL PROSECUTION.
©2022, The Martin Architectural Group, P.C.

REGISTERED ARCHITECT COMMONWEALTH OF PENNSYLVANIA DREW ROMANIC No. RA405015

THE MARTIN ARCHITECTURAL GROUP, P.C.
ARCHITECTS AND LAND PLANNERS
A PROFESSIONAL CORPORATION
240 NORTH 22ND STREET, PHILADELPHIA, PA, 19103
P (215) 665-1600 F (215) 561-5064

| | |
|---|---|
| P.A.: | DREW ROMANIC |
| P.M.: | JASON DECAMPLI |
| DRAWN BY: | Author |
| PROJECT NO: | 1362-12 |

| NO. | REVISION | DATE |
|---|---|---|
| 1 | PERMIT SET | 12/20/22 |

ENLARGED ELEVATIONS
**Granite Run Apartment 02**
MIDDLETOWN TOWNSHIP, PA

SCALE:
DATE: 09/30/22

**A3.14**

©2022, The Martin Architectural Group, P.C.

Printed: 1/13/2023 4:38:28 PM




**1 SERVICE COURTYARD - NORTH EAST**
**SCALE : 1/8" = 1'-0"**

| KEYNOTE LEGEND | | |
|---|---|---|
| MARK | DESCRIPTION | |
| | | |
| 03 003 | DECORATIVE PRECAST PANEL | |
| 03 004 | DECORATIVE PRECAST BAND | |
| 04 002 | GLEN GERY THIN BRICK VENEER - COLOR: ANTIETAM | |
| 04 003 | FIZZANO ARCHITECTURAL BLOCK - COLOR: F-517 | |
| 04 004 | GLEN GERY FULL BRICK VENEER - COLOR: ANTIETAM | |
| 04 005 | FIZZANO ARCHITECTURAL SILL SFS-14 - COLOR: F-518 | |
| 04 006 | FIZZANO ARCHITECTURAL SILL S-4 - COLOR: F-518 | |
| 06 001 | ALLURA SMOOTH SIDING - COLOR; STERLING GRAY | |
| 06 002 | ALLURA SMOOTH PANEL - COLOR: STERLING GRAY | |
| 06 003 | ALLURA SMOOTH PANEL - COLOR: FLAGSTONE | |
| 06 004 | NICHIHA VINTAGE WOOD PANEL - COLOR: CEDAR | |
| 06 005 | VERTICAL 2X8 KNOTWOOD BATTEN (OR EQ.) KEB20050F | |
| 06 006 | ALLURA 5/4 TRIM - COLOR: FLAGSTONE | |
| 07 001 | PAC-CLAD METAL PANEL - COLOR: BLACK ALUMINUM | |
| 07 002 | DRYVIT EIFS VENEER - COLOR: SMOKE SIGNAL | |

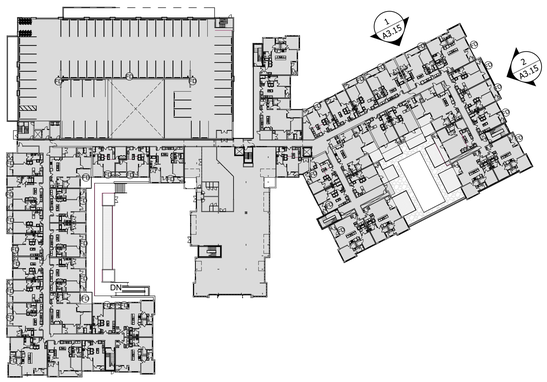





**2 EAST ELEVATION - RETAIL**
**SCALE : 1/8" = 1'-0"**

ALL REPORTS, PLANS, SPECIFICATIONS AND COMPUTER FILES RELATING TO THIS PROJECT ARE THE PROPERTY OF THE MARTIN ARCHITECTURAL GROUP. THE MARTIN ARCHITECTURAL GROUP RETAINS ALL COMMON LAW, STATUTE AND OTHER RESERVED RIGHTS INCLUDING THE COPYRIGHT THERETO. REPRODUCTION OF THE MATERIAL HEREIN OR SUBSTANTIAL USE WITHOUT WRITTEN PERMISSION OF THE MARTIN ARCHITECTURAL GROUP VIOLATES THE COPYRIGHT LAWS OF THE UNITED STATES AND WILL BE SUBJECT TO LEGAL PROSECUTION.
©2022, The Martin Architectural Group, P.C.

REGISTERED ARCHITECT COMMONWEALTH OF PENNSYLVANIA DREW ROMANIC No. RA409015

THE MARTIN ARCHITECTURAL GROUP, P.C.
ARCHITECTS AND LAND PLANNERS
A PROFESSIONAL CORPORATION
240 NORTH 22ND STREET, PHILADELPHIA, PA, 19103
P (215) 665-1680 F (215) 561-5064

| | |
|---|---|
| P.A.: | DREW ROMANIC |
| P.M.: | JASON DECAMPLI |
| DRAWN BY: | Author |
| PROJECT NO: | 1362-12 |

| NO. | REVISION | DATE |
|---|---|---|
| 1 | PERMIT SET | 12/20/22 |

# ENLARGED ELEVATIONS
## Granite Run Apartment 02
MIDDLETOWN TOWNSHIP, PA

SCALE:
DATE: 09/30/22

**A3.15**

©2022, The Martin Architectural Group, P.C.

Printed: 1/13/2023 4:39:01 PM

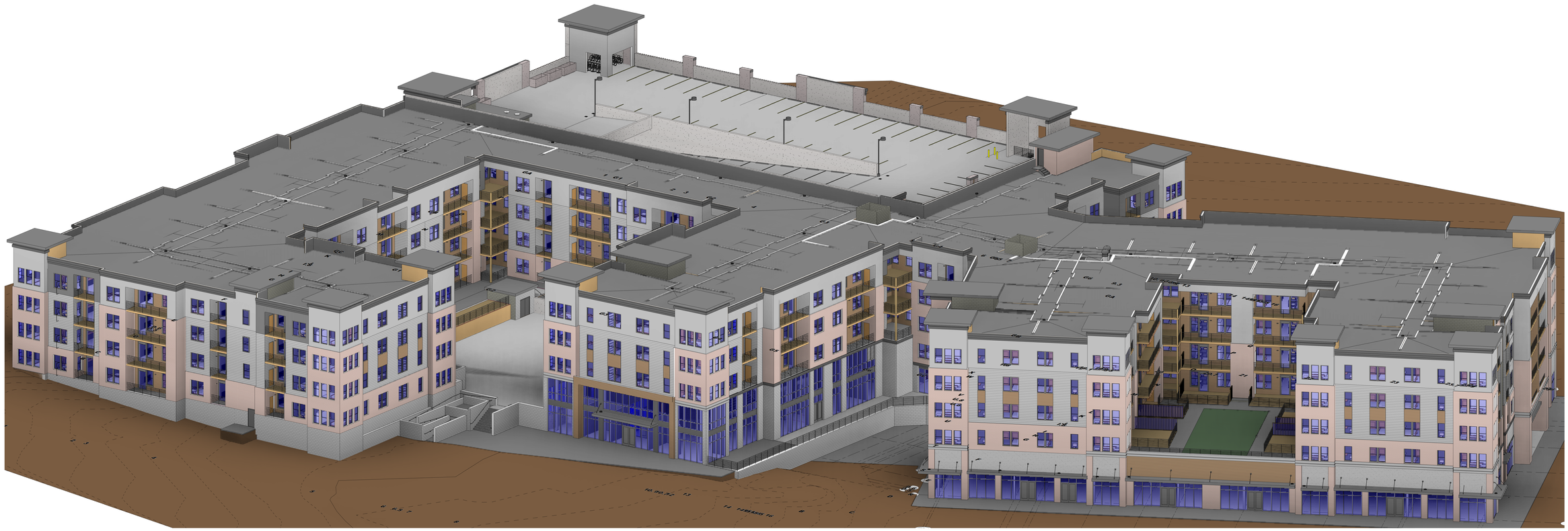

1 **3D VIEW 1**
SCALE :

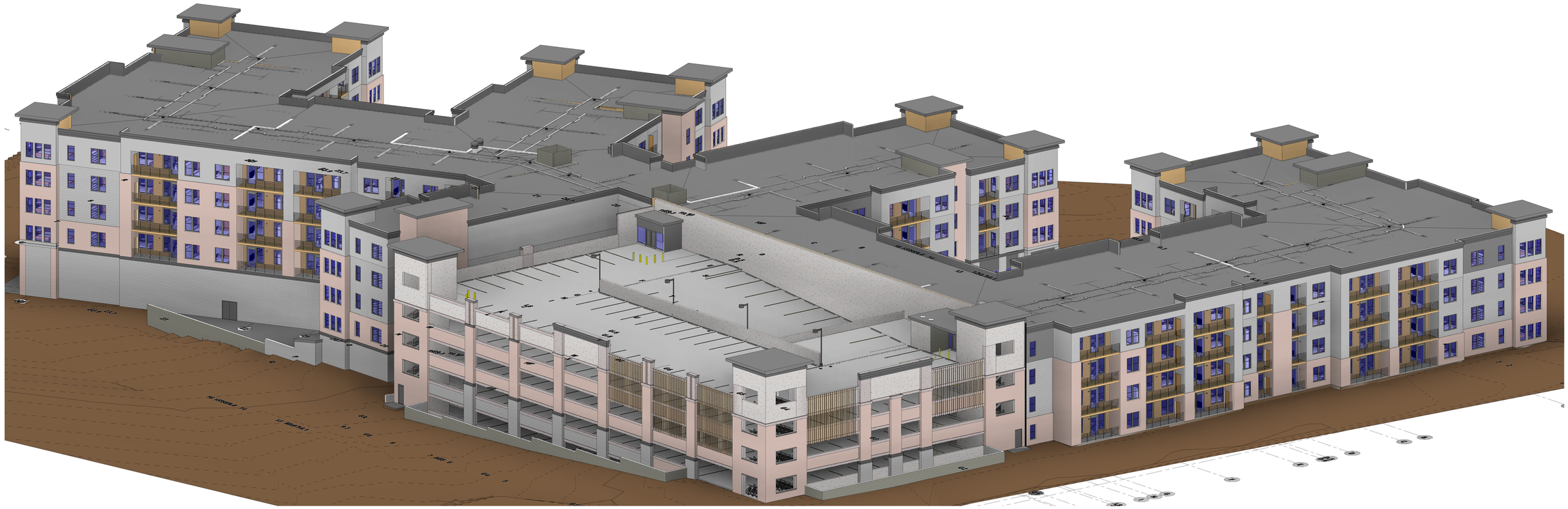

2 **3D VIEW 2**

ALL REPORTS, PLANS, SPECIFICATIONS AND COMPUTER FILES RELATING TO THIS PROJECT ARE THE PROPERTY OF THE MARTIN ARCHITECTURAL GROUP. THE MARTIN ARCHITECTURAL GROUP RETAINS ALL COMMON LAW, STATUTE AND OTHER RESERVED RIGHTS INCLUDING THE COPYRIGHT THERETO. REPRODUCTION OF THE MATERIAL HEREIN OR SUBSTANTIAL USE WITHOUT WRITTEN PERMISSION OF THE MARTIN ARCHITECTURAL GROUP VIOLATES THE COPYRIGHT LAWS OF THE UNITED STATES AND WILL BE SUBJECT TO LEGAL PROSECUTION.
©2022, The Martin Architectural Group, P.C.




THE MARTIN ARCHITECTURAL GROUP, P.C.
ARCHITECTS AND LAND PLANNERS
A PROFESSIONAL CORPORATION
240 NORTH 22ND STREET, PHILADELPHIA, PA, 19103
P (215) 665-1080 F (215) 561-5064

| | |
|---|---|
| P.A.: | DREW ROMANIC |
| P.M.: | JASON DECAMPLI |
| DRAWN BY: | Author |
| PROJECT NO: | 1362-12 |

| NO. | REVISION | DATE |
|---|---|---|
| 1 | PERMIT SET | 12/20/22 |

PERSPECTIVES
**Granite Run Apartment 02**
MIDDLETOWN TOWNSHIP, PA

SCALE:
DATE: 11/09/22

# A3.20

©2022, The Martin Architectural Group, P.C.

Printed: 1/13/2023 4:46:46 PM



2 **POOL FACING WEST**
SCALE :

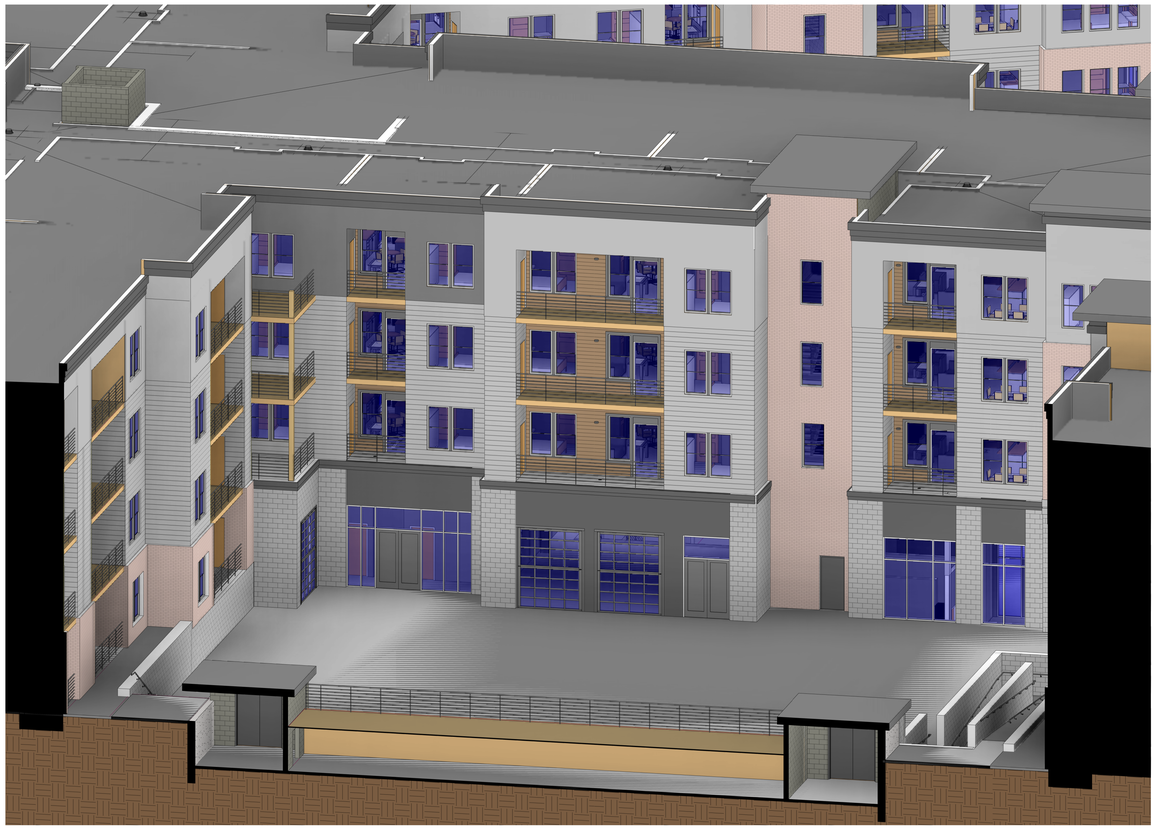

1 **POOL FACING EAST**
SCALE :

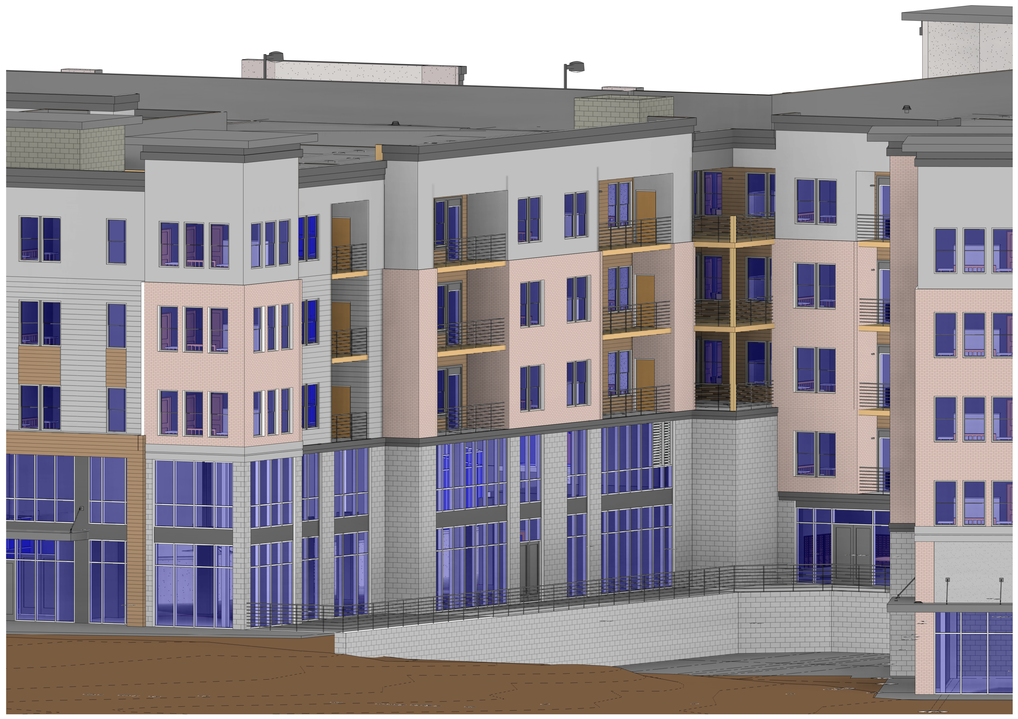

3 **DOG WALK VIEW**
SCALE :

ALL REPORTS, PLANS, SPECIFICATIONS AND COMPUTER FILES RELATING TO THIS PROJECT ARE THE PROPERTY OF THE MARTIN ARCHITECTURAL GROUP. THE MARTIN ARCHITECTURAL GROUP RETAINS ALL COMMON LAW, STATUTE AND OTHER RESERVED RIGHTS INCLUDING THE COPYRIGHT THERETO. REPRODUCTION OF THE MATERIAL HEREIN OR SUBSTANTIAL USE WITHOUT WRITTEN PERMISSION OF THE MARTIN ARCHITECTURAL GROUP VIOLATES THE COPYRIGHT LAWS OF THE UNITED STATES AND WILL BE SUBJECT TO LEGAL PROSECUTION.
©2022, The Martin Architectural Group, P.C.




THE MARTIN ARCHITECTURAL GROUP, P.C.
ARCHITECTS AND LAND PLANNERS
A PROFESSIONAL CORPORATION
240 NORTH 22ND STREET, PHILADELPHIA, PA, 19103
P (215) 665-1080 F (215) 561-5064

| | |
|---|---|
| P.A.: | DREW ROMANIC |
| P.M.: | JASON DECAMPLI |
| DRAWN BY: | Author |
| PROJECT NO: | 1362-12 |

| NO. | REVISION | DATE |
|---|---|---|
| 1 | PERMIT SET | 12/20/22 |

PERSPECTIVES
**Granite Run Apartment 02**
MIDDLETOWN TOWNSHIP, PA

SCALE:
DATE: 10/13/22

**A3.21**

©2022, The Martin Architectural Group, P.C.

Printed: 1/13/2023 4:48:27 PM

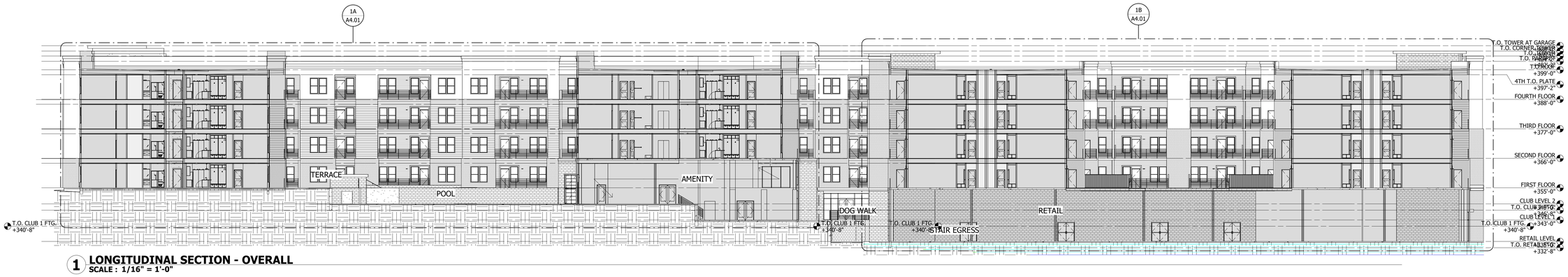


**1 LONGITUDINAL SECTION - OVERALL**
SCALE : 1/16" = 1'-0"




**1A SECTION @ POOL COURTYARD & CLUBHOUSE**
SCALE : 1/8" = 1'-0"




**1B SECTION @ DOG WALK & RETAIL COURTYARD**
SCALE : 1/8" = 1'-0"

ALL REPORTS, PLANS, SPECIFICATIONS AND COMPUTER FILES RELATING TO THIS PROJECT ARE THE PROPERTY OF THE MARTIN ARCHITECTURAL GROUP. THE MARTIN ARCHITECTURAL GROUP RETAINS ALL COMMON LAW, STATUTE AND OTHER RESERVED RIGHTS INCLUDING THE COPYRIGHT THERETO. REPRODUCTION OF THE MATERIAL HEREIN OR SUBSTANTIAL USE WITHOUT WRITTEN PERMISSION OF THE MARTIN ARCHITECTURAL GROUP VIOLATES THE COPYRIGHT LAWS OF THE UNITED STATES AND WILL BE SUBJECT TO LEGAL PROSECUTION.
©2022, The Martin Architectural Group, P.C.

NIC

Professi
I hereby prepare duly lice laws of

Professi License Expiratio

THE MARTIN ARCHITECTURAL GROUP, P.C.
ARCHITECTS AND LAND PLANNERS
A PROFESSIONAL CORPORATION
240 NORTH 22ND STREET, PHILADELPHIA, PA, 19103
P (215) 665-1080 F (215) 561-5064

| | |
|---|---|
| P.A.: | DREW ROMANIC |
| P.M.: | JASON DECAMPLI |
| DRAWN BY: | MAG |
| PROJECT NO: | 1362-12 |

| NO. | REVISION | DATE |
|---|---|---|
| 1 | PERMIT SET | 12/20/22 |

SECTIONS
**Granite Run Apartment 02**
MIDDLETOWN TOWNSHIP, PA

| | |
|---|---|
| SCALE: | AS NOTED |
| DATE: | 12/31/2017 |

# A4.01

©2022, The Martin Architectural Group, P.C.

Printed: 1/13/2023 4:48:51 PM

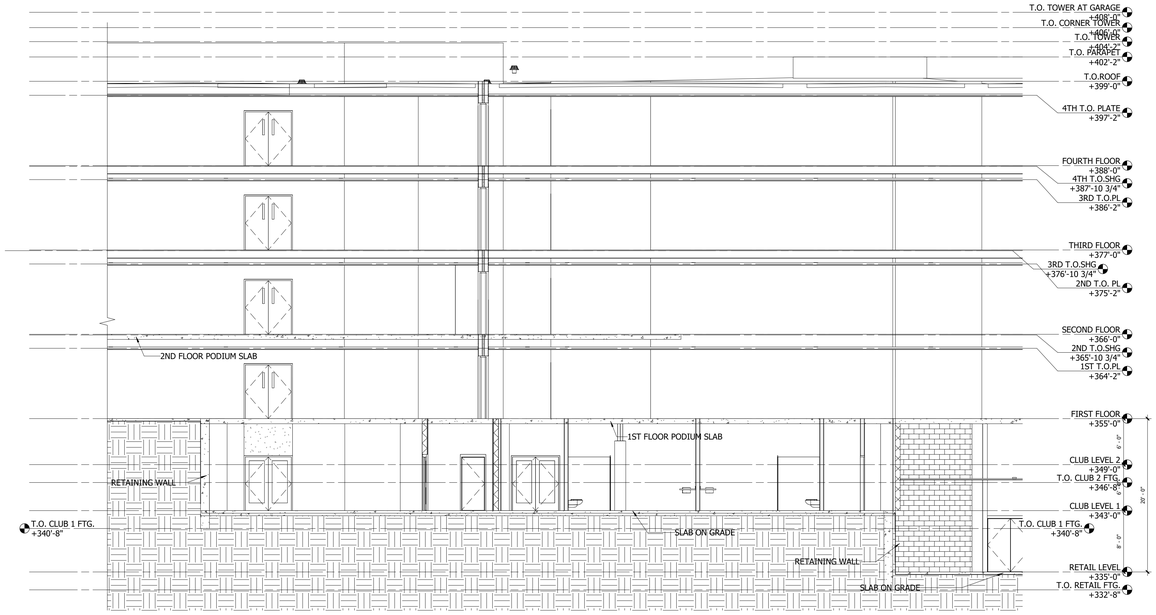


## 2 SECTION @ INTERIOR GRADE CHANGES
**SCALE : 1/8" = 1'-0"**

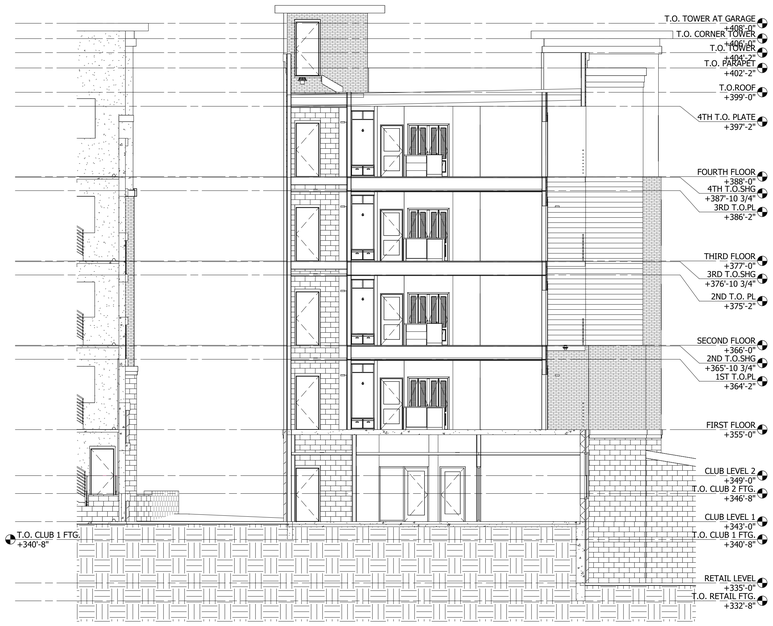


## 3 SECTION @ REAR WING
**SCALE : 1/8" = 1'-0"**




## 1 SECTION @ GARAGE AND POOL COURTYARD
**SCALE : 1/8" = 1'-0"**

ALL REPORTS, PLANS, SPECIFICATIONS AND COMPUTER FILES RELATING TO THIS PROJECT ARE THE PROPERTY OF THE MARTIN ARCHITECTURAL GROUP. THE MARTIN ARCHITECTURAL GROUP RETAINS ALL COMMON LAW, STATUTE AND OTHER RESERVED RIGHTS INCLUDING THE COPY-RIGHT THERETO. REPRODUCTION OF THE MATERIAL HEREIN OR SUBSTANTIAL USE WITHOUT WRITTEN PERMISSION OF THE MARTIN ARCHITECTURAL GROUP VIOLATES THE COPYRIGHT LAWS OF THE UNITED STATES AND WILL BE SUBJECT TO LEGAL PROSECUTION.
©2022, The Martin Architectural Group, P.C.

NIC

COMMONWEALTH OF PENNSYLVANIA REGISTERED ARCHITECT DREW ROMANIC No. RA-020015

Professi
I hereby prepare and/or laws of

Professi License Expirati

THE MARTIN ARCHITECTURAL GROUP, P.C.
ARCHITECTS AND LAND PLANNERS
A PROFESSIONAL CORPORATION
240 NORTH 22ND STREET, PHILADELPHIA, PA, 19103
P (215) 665-1680 F (215) 561-5064

| | |
|---|---|
| P.A.: | DREW ROMANIC |
| P.M.: | JASON DECAMPLI |
| DRAWN BY: | MAG |
| PROJECT NO: | 1362-12 |

| NO. | REVISION | DATE |
|---|---|---|
| 1 | PERMIT SET | 12/20/22 |

SECTIONS

**Granite Run Apartment 02**

MIDDLETOWN TOWNSHIP, PA

| | |
|---|---|
| SCALE: | AS NOTED |
| DATE: | 12/31/2017 |

**A4.02**

©2022, The Martin Architectural Group, P.C.

Printed: 1/13/2023 4:48:59 PM




**2 LONGITUDINAL SECTION @ CLUBHOUSE**
SCALE : 1/8" = 1'-0"




**1 SECTION @ RETAIL BASE**
SCALE : 1/8" = 1'-0"

ALL REPORTS, PLANS, SPECIFICATIONS AND COMPUTER FILES RELATING TO THIS PROJECT ARE THE PROPERTY OF THE MARTIN ARCHITECTURAL GROUP. THE MARTIN ARCHITECTURAL GROUP RETAINS ALL COMMON LAW, STATUTE AND OTHER RESERVED RIGHTS INCLUDING THE COPYRIGHT THERETO. REPRODUCTION OF THE MATERIAL HEREIN OR SUBSTANTIAL USE WITHOUT WRITTEN PERMISSION OF THE MARTIN ARCHITECTURAL GROUP VIOLATES THE COPYRIGHT LAWS OF THE UNITED STATES AND WILL BE SUBJECT TO LEGAL PROSECUTION.
©2022, The Martin Architectural Group, P.C.




THE MARTIN ARCHITECTURAL GROUP, P.C.
ARCHITECTS AND LAND PLANNERS
A PROFESSIONAL CORPORATION
240 NORTH 22ND STREET, PHILADELPHIA, PA, 19103
P (215) 665-1080 F (215) 561-5064

| | |
|---|---|
| P.A.: | DREW ROMANIC |
| P.M.: | JASON DECAMPLI |
| DRAWN BY: | Author |
| PROJECT NO: | 1362-12 |

| NO. | REVISION | DATE |
|---|---|---|
| 1 | PERMIT SET | 12/20/22 |

SECTIONS
**Granite Run Apartment 02**
MIDDLETOWN TOWNSHIP, PA

SCALE:
DATE: 07/22/22

# A4.03

©2022, The Martin Architectural Group, P.C.

Printed: 1/13/2023 4:49:08 PM

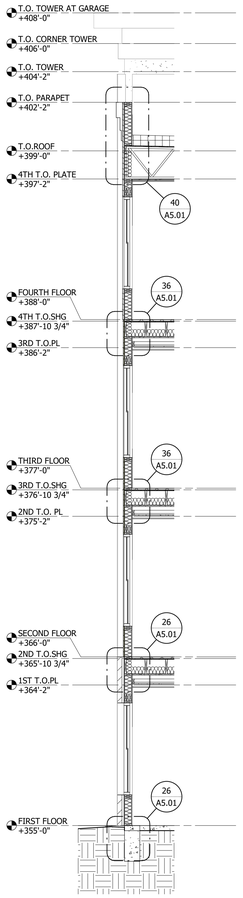


## 1 TYP. SECTION @ EXT. WALL
SCALE : 1/4" = 1'-0"

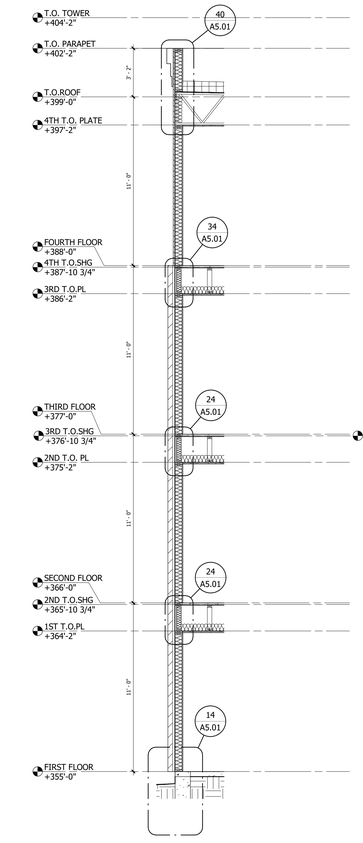


## 2 TYP. SECTION @ HVAC CLOSET
SCALE : 1/4" = 1'-0"

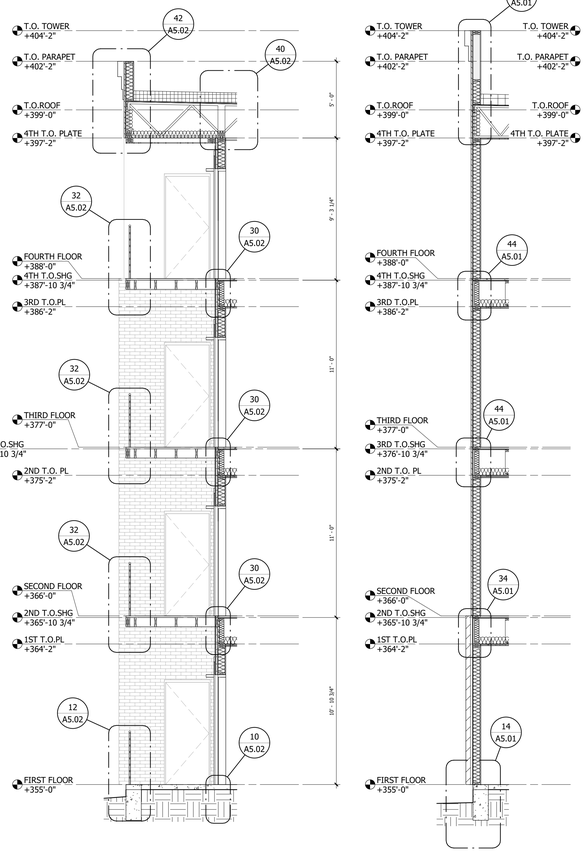


## 3 TYP. SECTION AT BALCONY
SCALE : 1/4" = 1'-0"




## 4 TYP. HVAC CLOSET SECTION @ TOWER
SCALE : 1/4" = 1'-0"

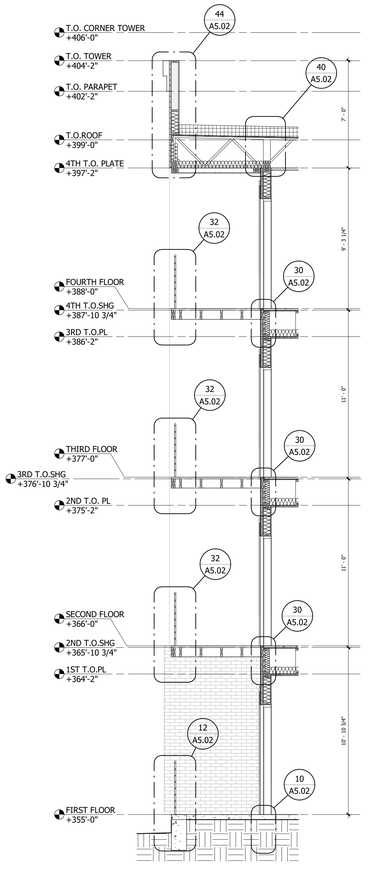


## 5 TYP. BALCONY SECTION @ TOWER
SCALE : 1/4" = 1'-0"

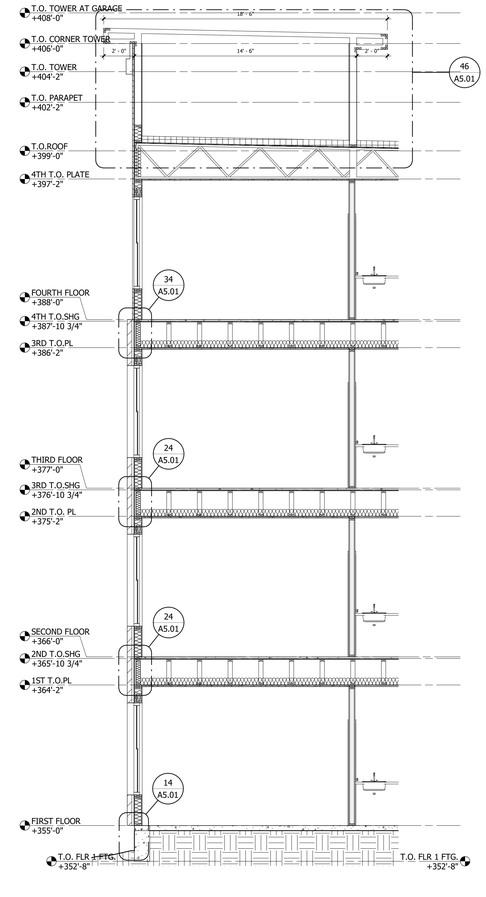


## 6 TYP. SECTION @ CORNER TOWER
SCALE : 1/4" = 1'-0"

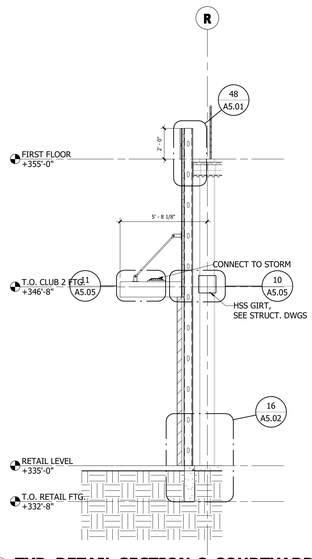


## 7 TYP. RETAIL SECTION @ COURTYARD
SCALE : 1/4" = 1'-0"

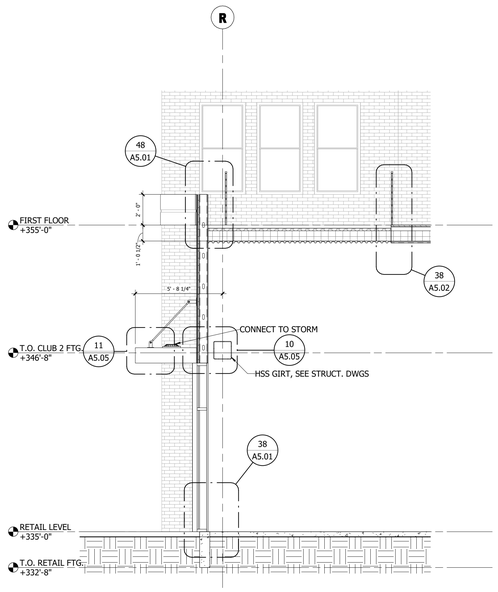


## 8 TYP. RETAIL COURTYARD SECTION @ STOREFRONT
SCALE : 1/4" = 1'-0"

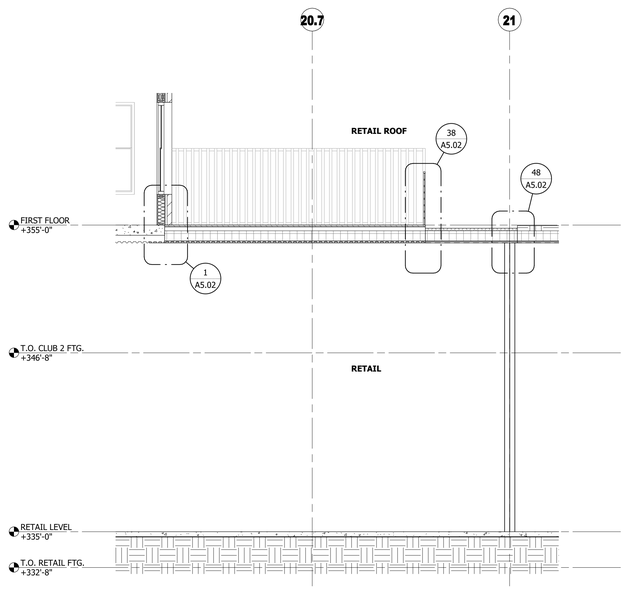


## 9 TYP. DECK SECTION AT RETAIL TERRACE
SCALE : 1/4" = 1'-0"

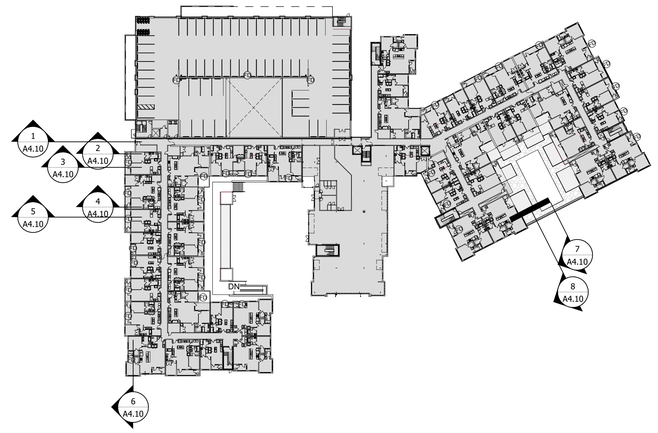


ALL REPORTS, PLANS, SPECIFICATIONS AND COMPUTER FILES RELATING TO THIS PROJECT ARE THE PROPERTY OF THE MARTIN ARCHITECTURAL GROUP. THE MARTIN ARCHITECTURAL GROUP RETAINS ALL COMMON LAW, STATUTE AND OTHER RESERVED RIGHTS INCLUDING THE COPY-RIGHT THERETO. REPRODUCTION OF THE MATERIAL HEREIN OR SUBSTANTIAL USE WITHOUT WRITTEN PERMISSION OF THE MARTIN ARCHITECTURAL GROUP VIOLATES THE COPYRIGHT LAWS OF THE UNITED STATES AND WILL BE SUBJECT TO LEGAL PROSECUTION.
©2022, The Martin Architectural Group, P.C.

REGISTERED ARCHITECT COMMONWEALTH OF PENNSYLVANIA DREW ROMANIC No. RA409015

THE MARTIN ARCHITECTURAL GROUP, P.C.
ARCHITECTS AND LAND PLANNERS
A PROFESSIONAL CORPORATION
240 NORTH 22ND STREET, PHILADELPHIA, PA, 19103
P (215) 665-1680 F (215) 561-5064

| | |
|---|---|
| P.A.: | DREW ROMANIC |
| P.M.: | JASON DECAMPLI |
| DRAWN BY: | Author |
| PROJECT NO: | 1362-12 |

| NO. | REVISION | DATE |
|---|---|---|
| 1 | PERMIT SET | 12/20/22 |

WALL SECTIONS
**Granite Run Apartment 02**
MIDDLETOWN TOWNSHIP, PA

SCALE:
DATE: 06/29/22

**A4.10**

©2022, The Martin Architectural Group, P.C.

Printed: 1/13/2023 4:49:25 PM

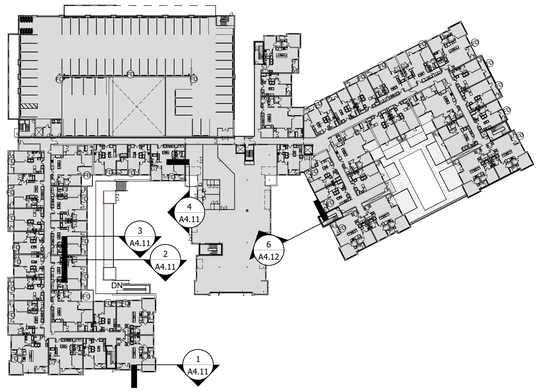


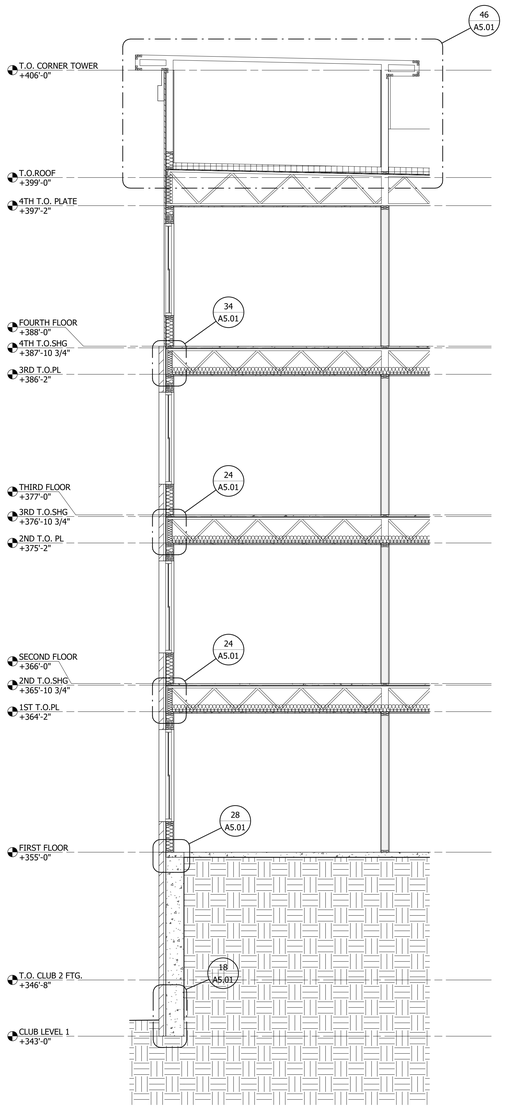


**1 TYP. CORNER TOWER SECTION W/ STONE BASE**
**SCALE : 1/4" = 1'-0"**

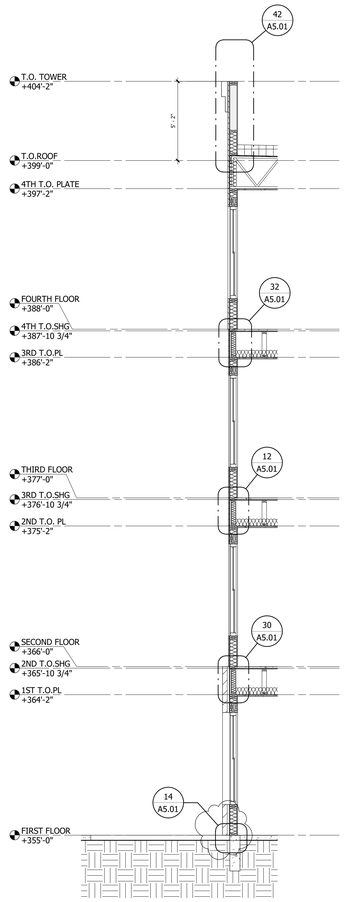


**2 TYP. SECTION @ POOL CORTYARD**
**SCALE : 1/4" = 1'-0"**

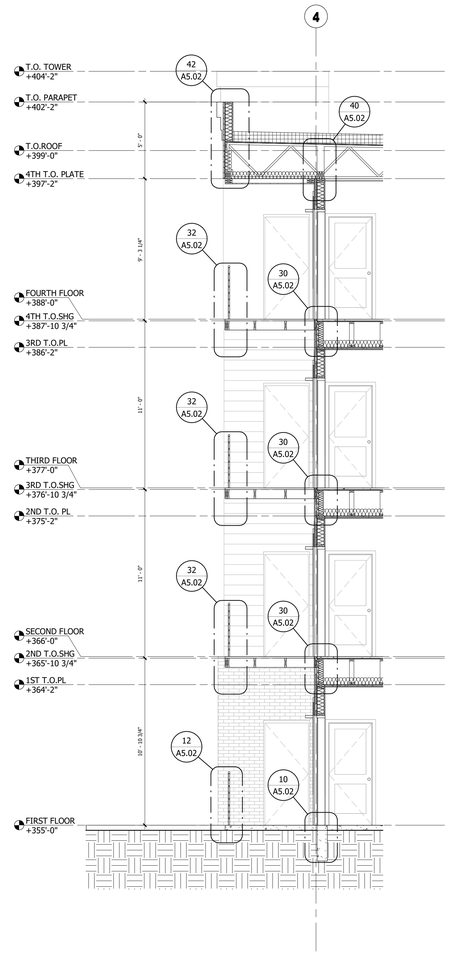


**3 TYP. BALCONY @ POOL CORTYARD**
**SCALE : 1/4" = 1'-0"**

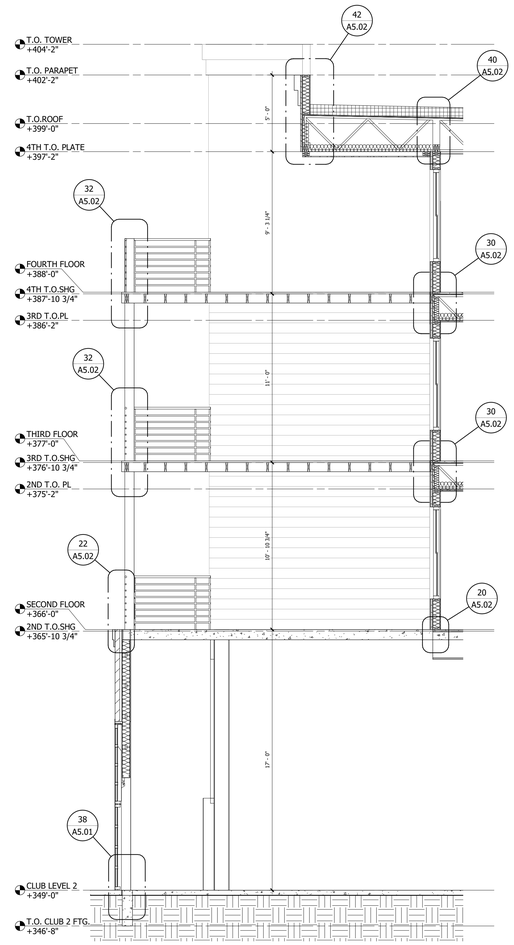


**4 CORNER BALCONY @ CLUBHOUSE**
**SCALE : 1/4" = 1'-0"**

ALL REPORTS, PLANS, SPECIFICATIONS AND COMPUTER FILES RELATING TO THIS PROJECT ARE THE PROPERTY OF THE MARTIN ARCHITECTURAL GROUP. THE MARTIN ARCHITECTURAL GROUP RETAINS ALL COMMON LAW, STATUTE AND OTHER RESERVED RIGHTS INCLUDING THE COPY-RIGHT THERETO. REPRODUCTION OF THE MATERIAL HEREIN OR SUBSTANTIAL USE WITHOUT WRITTEN PERMISSION OF THE MARTIN ARCHITECTURAL GROUP VIOLATES THE COPYRIGHT LAWS OF THE UNITED STATES AND WILL BE SUBJECT TO LEGAL PROSECUTION.
©2022, The Martin Architectural Group, P.C.

REGISTERED ARCHITECT COMMONWEALTH OF PENNSYLVANIA DREW ROMANIC No. RA409115

**THE MARTIN ARCHITECTURAL GROUP, P.C.**
**ARCHITECTS AND LAND PLANNERS**
A PROFESSIONAL CORPORATION
**240 NORTH 22ND STREET, PHILADELPHIA, PA, 19103**
**P (215) 665-1680 F (215) 561-5064**

| | |
|---|---|
| P.A.: | DREW ROMANIC |
| P.M.: | JASON DECAMPLI |
| DRAWN BY: | Author |
| PROJECT NO: | 1362-12 |

| NO. | REVISION | DATE |
|---|---|---|
| B | PERMIT COMMENTS | 12/20/22 |
| 1 | PERMIT SET | 12/30/22 |

WALL SECTIONS
**Granite Run Apartment 02**
MIDDLETOWN TOWNSHIP, PA

SCALE:
DATE: 06/29/22

**A4.11**

©2022, The Martin Architectural Group, P.C.

Printed: 1/13/2023 4:49:39 PM

ALL REPORTS, PLANS, SPECIFICATIONS AND COMPUTER FILES RELATING TO THIS PROJECT ARE THE PROPERTY OF THE MARTIN ARCHITECTURAL GROUP. THE MARTIN ARCHITECTURAL GROUP RETAINS ALL COMMON LAW, STATUTE AND OTHER RESERVED RIGHTS INCLUDING THE COPY-RIGHT THERETO. REPRODUCTION OF THE MATERIAL HEREIN OR SUBSTANTIAL USE WITHOUT WRITTEN PERMISSION OF THE MARTIN ARCHITECTURAL GROUP VIOLATES THE COPYRIGHT LAWS OF THE UNITED STATES AND WILL BE SUBJECT TO LEGAL PROSECUTION.
©2022, The Martin Architectural Group, P.C.

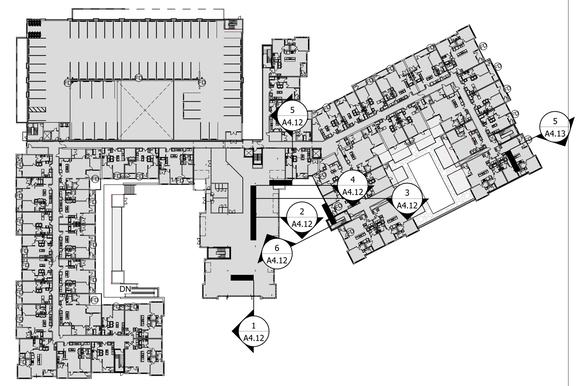


THE MARTIN ARCHITECTURAL GROUP, P.C.
ARCHITECTS AND LAND PLANNERS
A PROFESSIONAL CORPORATION
240 NORTH 22ND STREET, PHILADELPHIA, PA, 19103
P (215) 665-1680 F (215) 561-5064

| | |
|---|---|
| P.A.: | DREW ROMANIC |
| P.M.: | JASON DECAMPLI |
| DRAWN BY: | Author |
| PROJECT NO: | 1362-12 |

| NO. | REVISION | DATE |
|---|---|---|
| 1 | PERMIT SET | 12/20/22 |

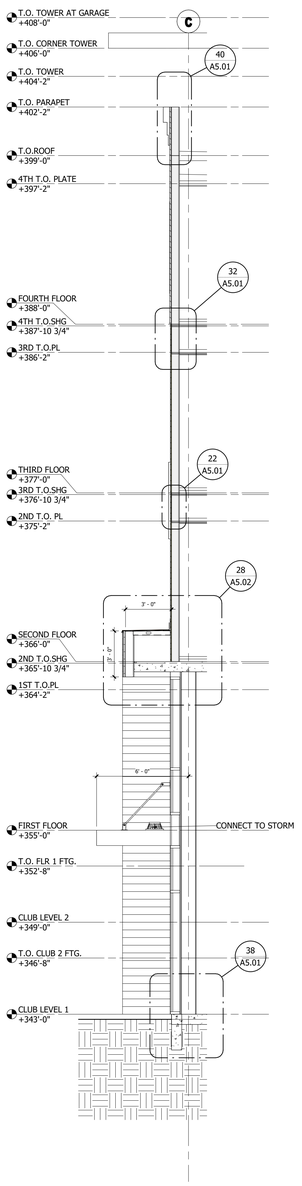


1 **SECTION @ MAIN ENTRY**
SCALE : 1/4" = 1'-0"

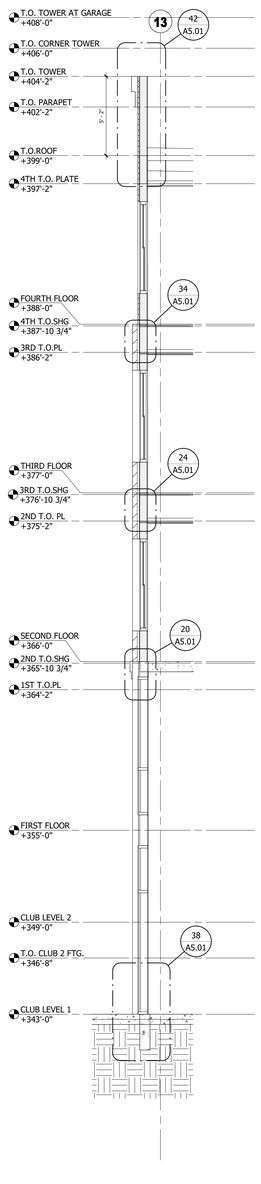


2 **TYP. SECTION @ MIDDLE COURTYARD**
SCALE : 1/4" = 1'-0"

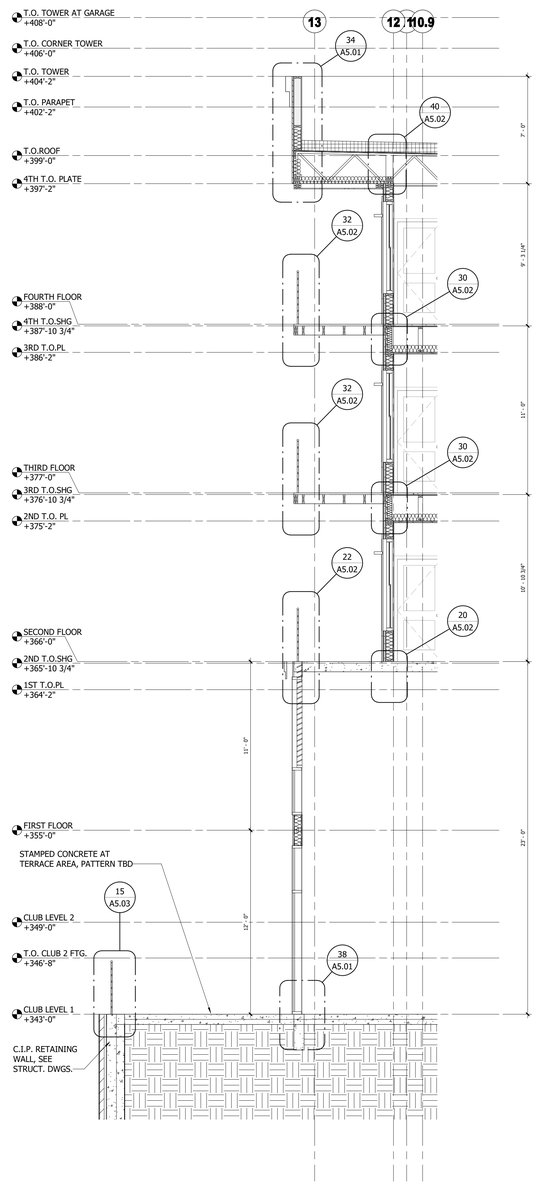


3 **TYP. BALCONY @ MIDDLE COURTYARD**
SCALE : 1/4" = 1'-0"

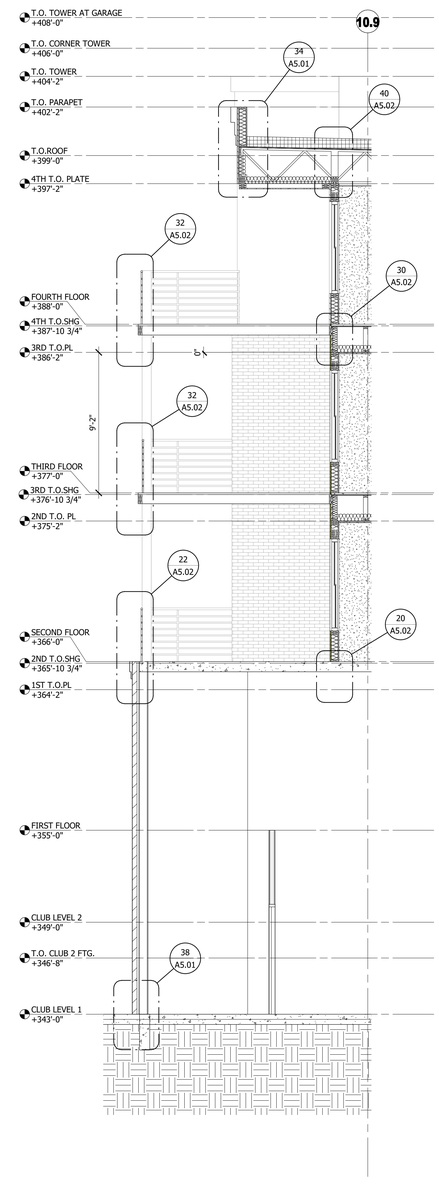


4 **CORNER BALCONY @ MIDDLE COURTYARD**
SCALE : 1/4" = 1'-0"

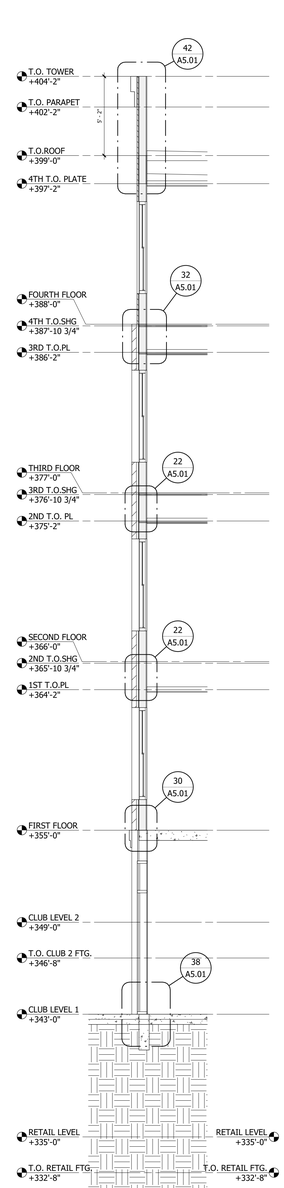


5 **TYP. TOWER @ MIDDLE COURTYARD**
SCALE : 1/4" = 1'-0"

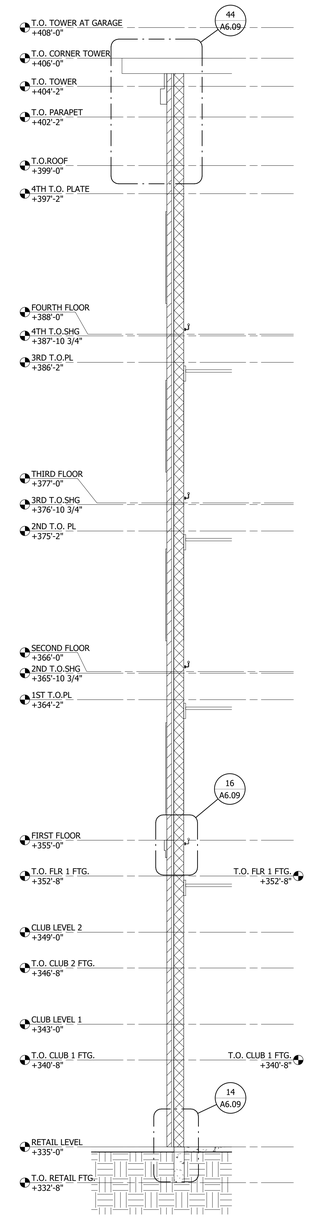


6 **WALL SECTION @ STAIR #7**
SCALE : 1/4" = 1'-0"

WALL SECTIONS
**Granite Run Apartment 02**
MIDDLETOWN TOWNSHIP, PA

SCALE:
DATE: 06/29/22

**A4.12**

©2022, The Martin Architectural Group, P.C.

Printed: 1/13/2023 4:49:55 PM

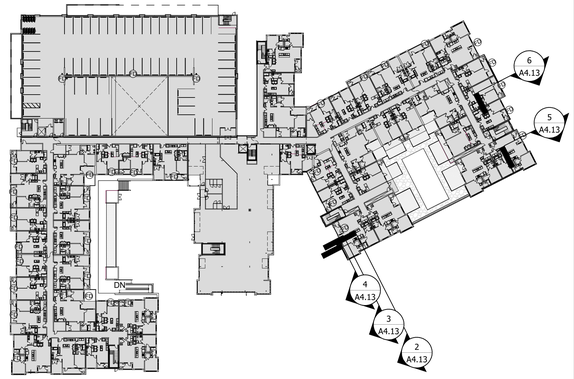


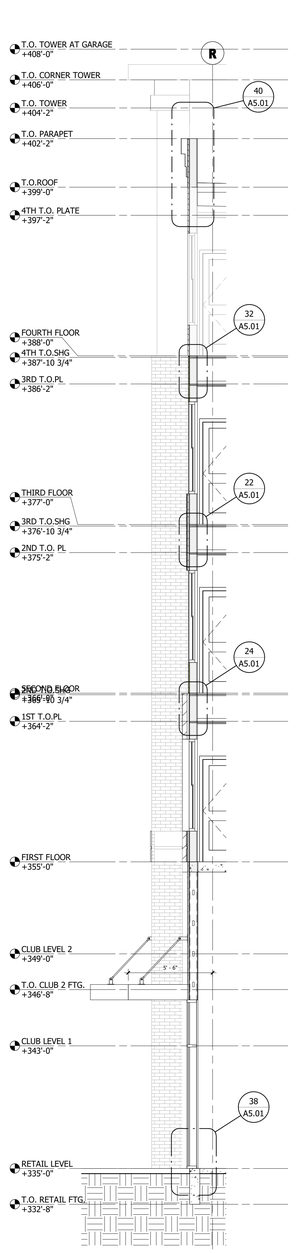
T.O. TOWER AT GARAGE +408'-0"
T.O. CORNER TOWER +406'-0"
T.O. TOWER +404'-2"
T.O. PARAPET +402'-2"
T.O.ROOF +399'-0"
4TH T.O. PLATE +397'-2"
FOURTH FLOOR +389'-10 3/4"
4TH T.O.SHG +387'-10 3/4"
3RD T.O.PL +386'-2"
THIRD FLOOR +377'-0"
3RD T.O.SHG +376'-10 3/4"
2ND T.O. PL +375'-2"
SECOND FLOOR +365'-0"
SECOND FLOOR +365'-0"
SECOND FLOOR +365'-0

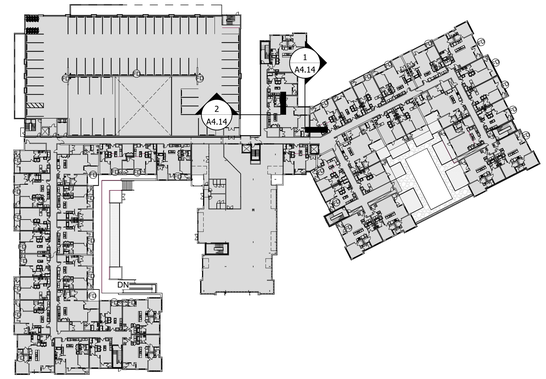


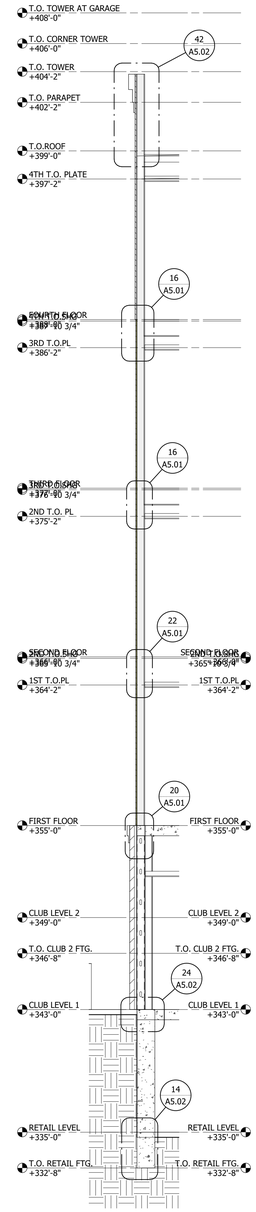


**2 SECTION @ SERVICE ALLEY**
**SCALE : 1/4" = 1'-0"**

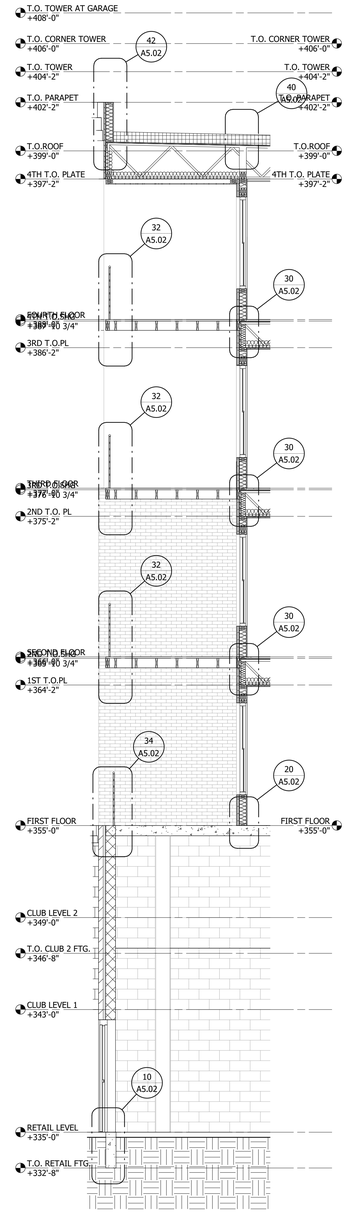


**1 CORNER BALCONY @ BOH**
**SCALE : 1/4" = 1'-0"**

ALL REPORTS, PLANS, SPECIFICATIONS AND COMPUTER FILES RELATING TO THIS PROJECT ARE THE PROPERTY OF THE MARTIN ARCHITECTURAL GROUP. THE MARTIN ARCHITECTURAL GROUP RETAINS ALL COMMON LAW, STATUTE AND OTHER RESERVED RIGHTS INCLUDING THE COPY-RIGHT THERETO. REPRODUCTION OF THE MATERIAL HEREIN OR SUBSTANTIAL USE WITHOUT WRITTEN PERMISSION OF THE MARTIN ARCHITECTURAL GROUP VIOLATES THE COPYRIGHT LAWS OF THE UNITED STATES AND WILL BE SUBJECT TO LEGAL PROSECUTION.
©2022, The Martin Architectural Group, P.C.




THE MARTIN ARCHITECTURAL GROUP, P.C.
ARCHITECTS AND LAND PLANNERS
A PROFESSIONAL CORPORATION
240 NORTH 22ND STREET, PHILADELPHIA, PA, 19103
P (215) 665-1600 F (215) 561-5064

| | |
|---|---|
| P.A.: | DREW ROMANIC |
| P.M.: | JASON DECAMPLI |
| DRAWN BY: | Author |
| PROJECT NO: | 1362-12 |

| NO. | REVISION | DATE |
|---|---|---|
| 1 | PERMIT SET | 12/20/22 |

# WALL SECTIONS
## Granite Run Apartment 02
MIDDLETOWN TOWNSHIP, PA

| | |
|---|---|
| SCALE: | |
| DATE: | 09/30/22 |

**A4.14**

©2022, The Martin Architectural Group, P.C.

Printed: 1/13/2023 4:50:24 PM

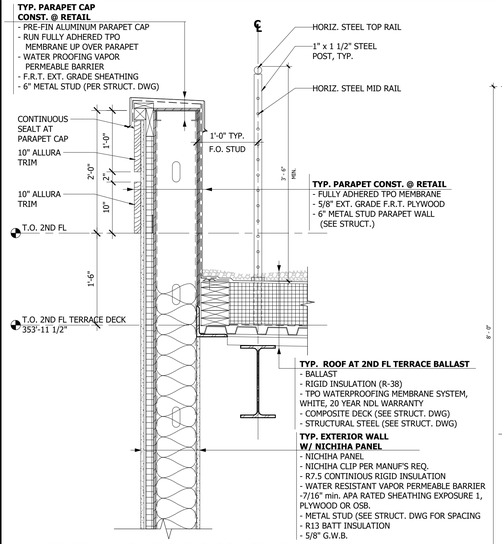


## 48 TYP. ROOF / CLG CONST. @ RETAIL
SCALE : 1" = 1'-0"

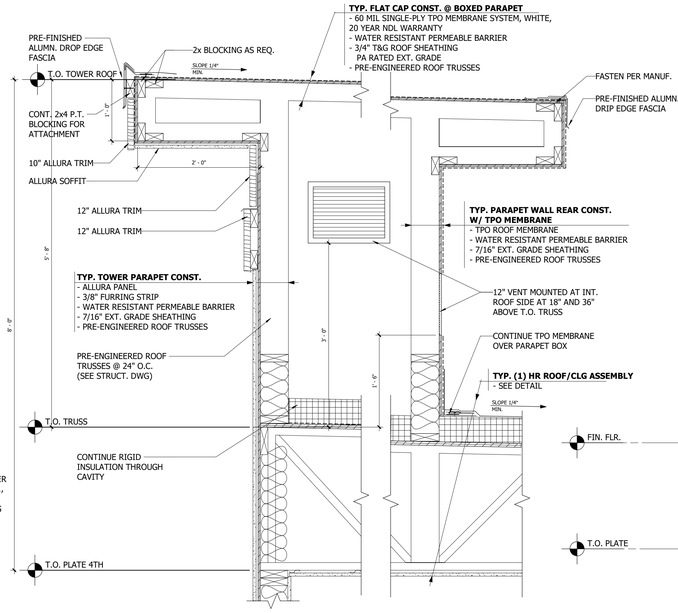


## 46 TYP. ROOF CONST @ CORNER TOWER
SCALE : 1" = 1'-0"

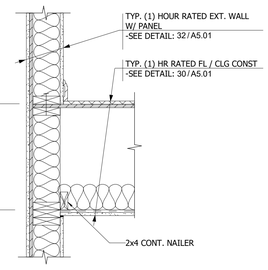


## 44 TYP. FLR PARALLEL W/ ALLURA PANEL
SCALE : 1" = 1'-0"

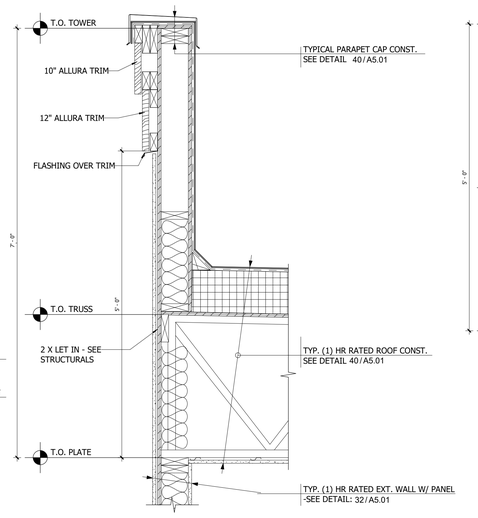


## 42 TYP. PARAPET CONSTRUCTION B
SCALE : 1" = 1'-0"

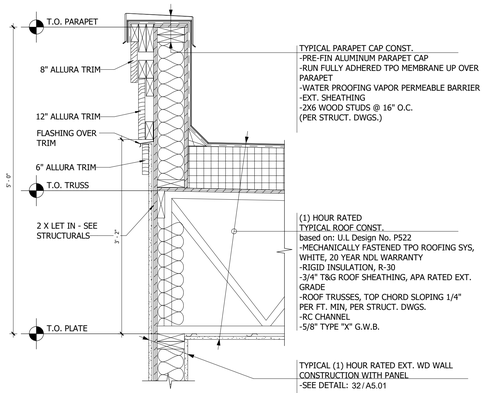


## 40 TYP. PARAPET CONSTRUCTION A
SCALE : 1" = 1'-0"

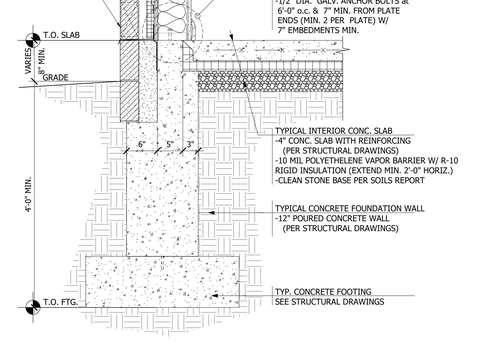


## 30 TYP. BRICK TO SIDING TRANSITION
SCALE : 1" = 1'-0"

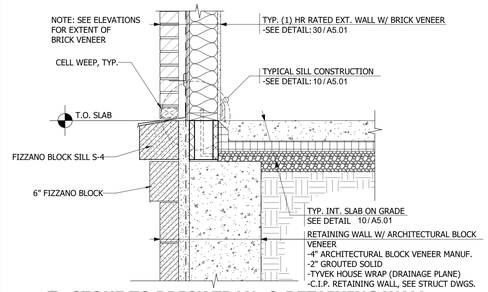


## 28 STONE TO BRICK TRAN. @ RETAINING WALL
SCALE : 1" = 1'-0"

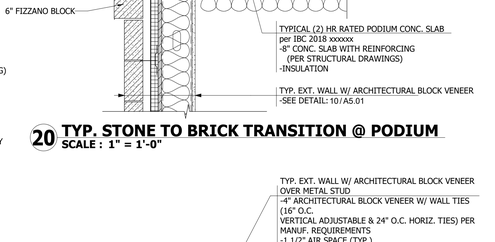


## 22 TYP. FLR PERP. W/ ALLURA SIDING
SCALE : 1" = 1'-0"




## 12 TYP. FLR PARALLEL W/ ALLURA SIDING
SCALE : 1" = 1'-0"




## 20 TYP. STONE TO BRICK TRANSITION @ PODIUM
SCALE : 1" = 1'-0"




## 18 FND CONST @ RETAINING WALL
SCALE : 1" = 1'-0"

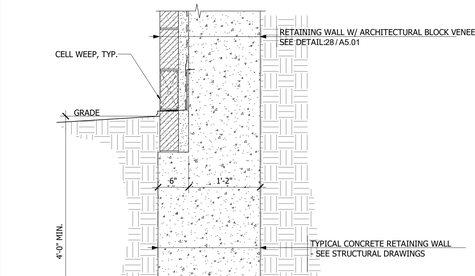


## 38 FOUNDATION @ STOREFRONT
SCALE : 1" = 1'-0"

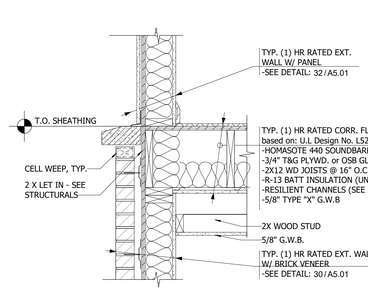


## 34 TYP. BRICK TO PANEL TRANSTION
SCALE : 1" = 1'-0"

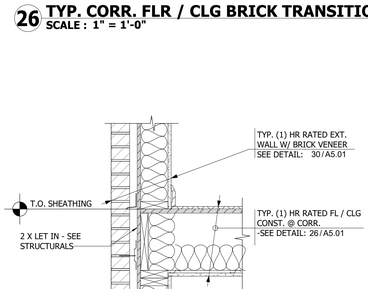


## 26 TYP. CORR. FLR / CLG BRICK TRANSITION
SCALE : 1" = 1'-0"




## 16 TYP. CORR. FLR / CLG W/ BRICK
SCALE : 1" = 1'-0"




## 24 TYP. FLR PERP. W/ BRICK VENEER
SCALE : 1" = 1'-0"

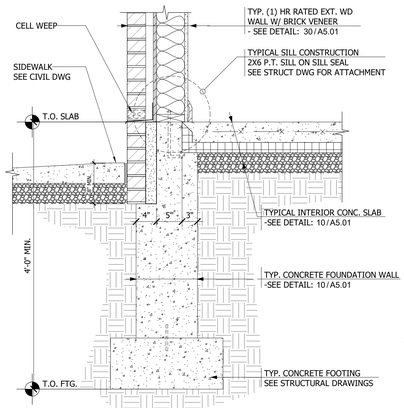


## 14 TYP. SLAB ON GRADE @ RES. FRONT
SCALE : 1" = 1'-0"




## 10 TYP. SLAB ON GRADE FND @ AMENITY/ BOH
SCALE : 1" = 1'-0"

ALL REPORTS, PLANS, SPECIFICATIONS AND COMPUTER FILES RELATING TO THIS PROJECT ARE THE PROPERTY OF THE MARTIN ARCHITECTURAL GROUP. THE MARTIN ARCHITECTURAL GROUP RETAINS ALL COMMON LAW, STATUTE AND OTHER RESERVED RIGHTS INCLUDING THE COPYRIGHT THERETO. REPRODUCTION OF THE MATERIAL HEREIN OR SUBSTANTIAL USE WITHOUT WRITTEN PERMISSION OF THE MARTIN ARCHITECTURAL GROUP VIOLATES THE COPYRIGHT LAWS OF THE UNITED STATES AND WILL BE SUBJECT TO LEGAL PROSECUTION.
©2022, The Martin Architectural Group, P.C.

NIC

Professional Engineer I hereby certify that the engineering plans and drawings were prepared in accordance with the requirements of the Commonwealth of Pennsylvania Professional Engineer License Expiration Date: 31 DREW ROMANIC No. 084355

THE MARTIN ARCHITECTURAL GROUP, P.C.
ARCHITECTS AND LAND PLANNERS
A PROFESSIONAL CORPORATION
240 NORTH 22ND STREET, PHILADELPHIA, PA, 19103
P (215) 665-1600 F (215) 561-5064

| | |
|---|---|
| P.A.: | DREW ROMANIC |
| P.M.: | JASON DECAMPLI |
| DRAWN BY: | MAG |
| PROJECT NO: | 1362-12 |

| NO. | REVISION | DATE |
|---|---|---|
| 1 | PERMIT SET | 12/20/22 |

DETAILS

**Granite Run Apartment 02**

MIDDLETOWN TOWNSHIP, PA

| | |
|---|---|
| SCALE: | AS NOTED |
| DATE: | 12/31/2017 |

**A5.01**

©2022, The Martin Architectural Group, P.C.

Printed: 1/13/2023 4:50:31 PM

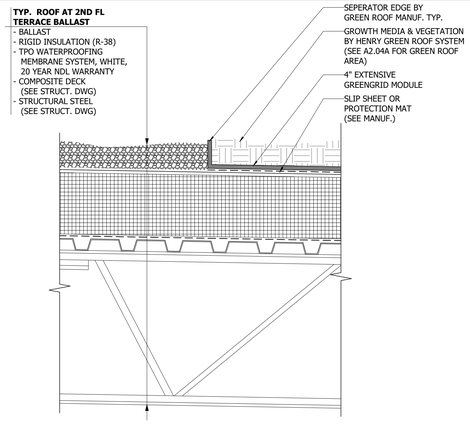


## 48 TYP. RETAIL GREEN ROOF
SCALE : 1 1/2" = 1'-0"

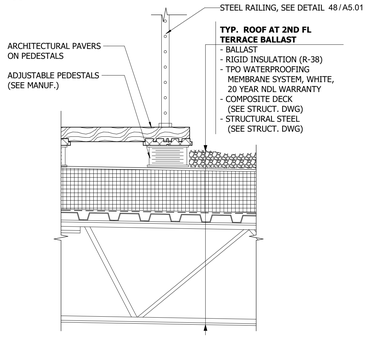


## 38 TYP. RETAIL ROOF BALLAST TO PAVERS
SCALE : 1" = 1'-0"

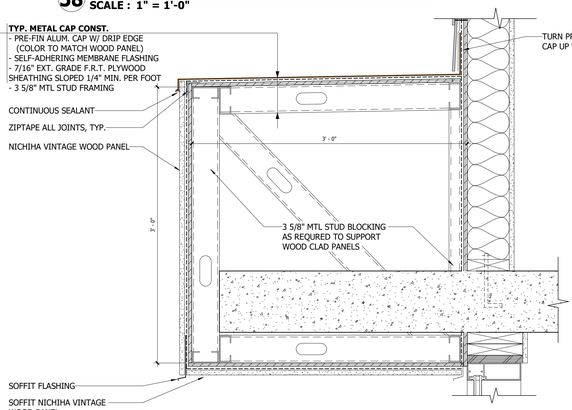


## 28 MAIN ENTRY WOOD BAND
SCALE : 1 1/2" = 1'-0"




## 1 TYP. RETAIL ROOF BRICK LEDGE
SCALE : 1 1/2" = 1'-0"

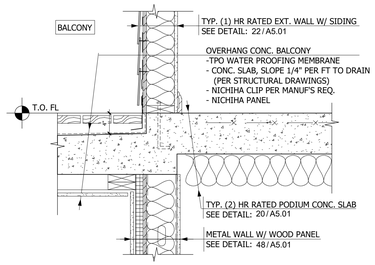


## 46 OVERHANG BALCONY @ PODIUM
SCALE : 1" = 1'-0"

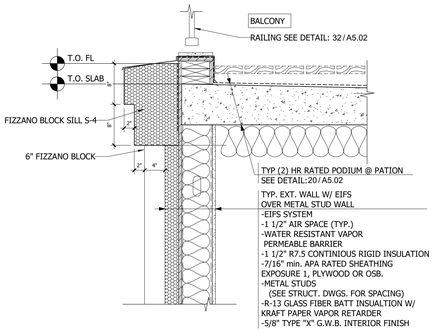


## 36 RAILING AT PODIUM BALCONY EDGE W/ EIFS
SCALE : 1" = 1'-0"

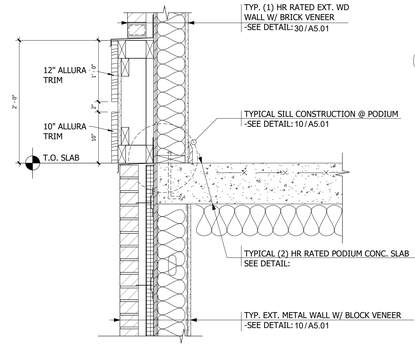


## 26 BAND BETWEEN BRICK @ PODIUM
SCALE : 1" = 1'-0"




## 16 TYP. SLAB ON GRADE @ RETAIL
SCALE : 1" = 1'-0"

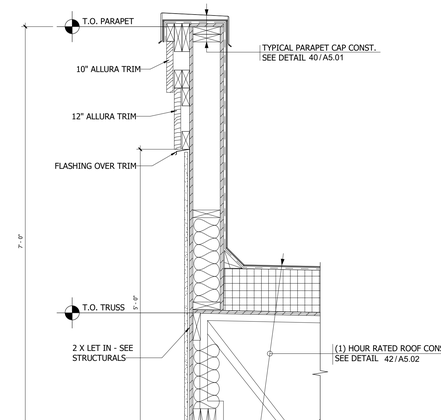


## 44 TYP. PARAPET @ BALCONY 2
SCALE : 1" = 1'-0"

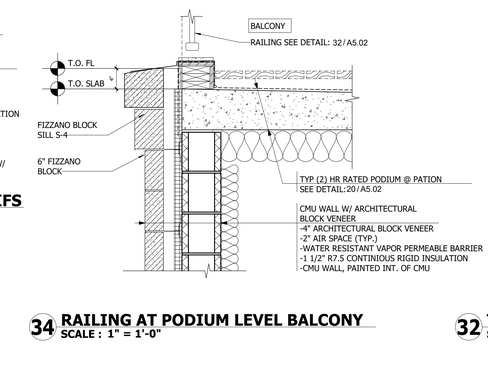


## 34 RAILING AT PODIUM LEVEL BALCONY
SCALE : 1" = 1'-0"

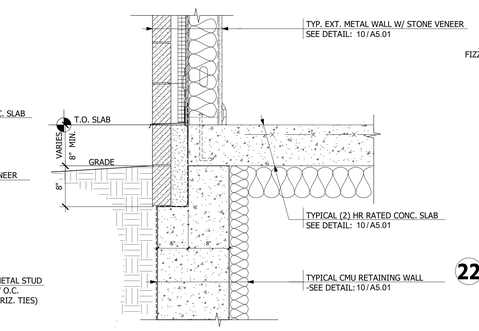


## 24 RETAINING WALL W/ STONE VENEER
SCALE : 1" = 1'-0"

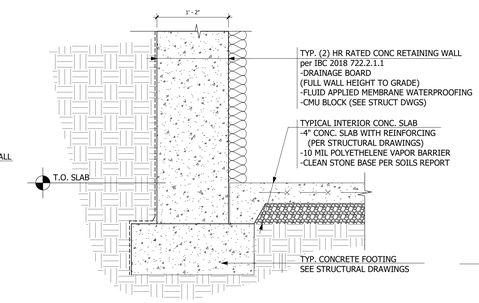


## 14 TYP. FOUNDATION @ RETAINING WALL
SCALE : 1" = 1'-0"

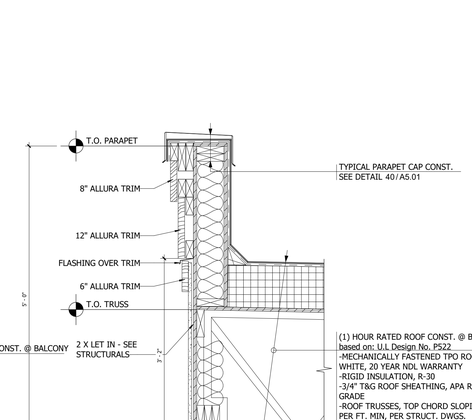


## 42 TYP. PARAPET @ BALCONY
SCALE : 1" = 1'-0"

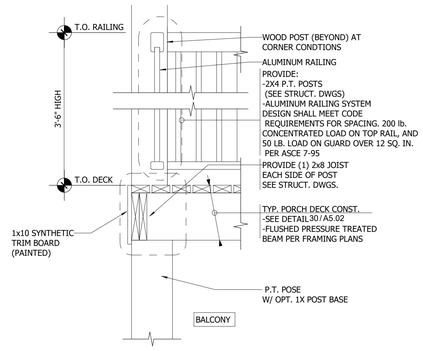


## 32 TYP. RAILING AT BALCONY EDGE
SCALE : 1" = 1'-0"

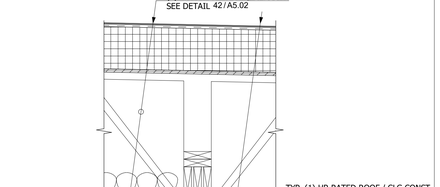


## 40 ROOF / CEILING CONST @ BALCONY
SCALE : 1" = 1'-0"

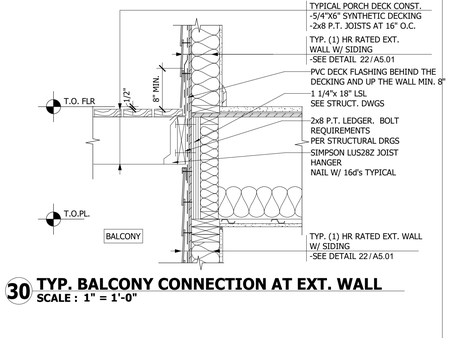


## 30 TYP. BALCONY CONNECTION AT EXT. WALL
SCALE : 1" = 1'-0"

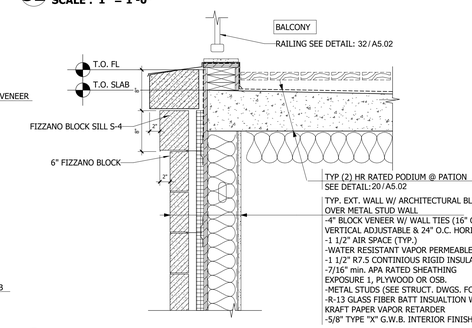


## 22 RAILING AT PODIUM LEVEL BALCONY EDGE
SCALE : 1" = 1'-0"

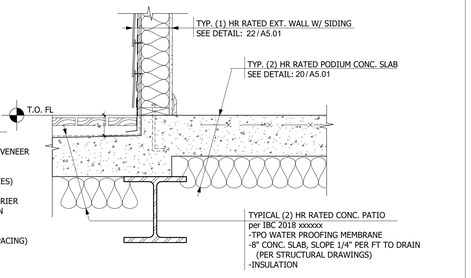


## 20 BALCONY @ PODIUM LEVEL
SCALE : 1" = 1'-0"

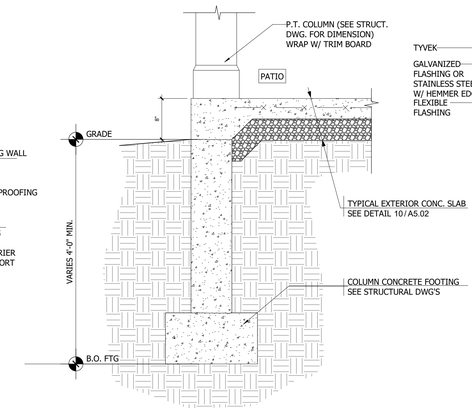


## 12 TYP. FOOTING AT PATIO EDGE
SCALE : 1" = 1'-0"

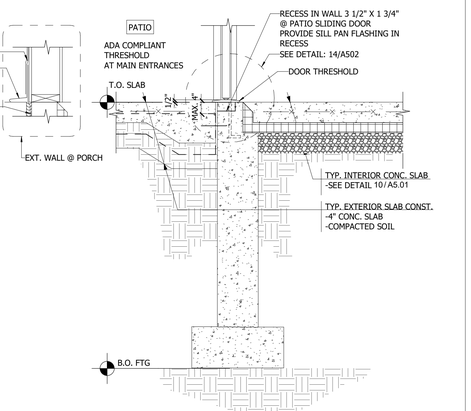


## 10 TYP. SWING DOOR AT PATIO
SCALE : 1" = 1'-0"

ALL REPORTS, PLANS, SPECIFICATIONS AND COMPUTER FILES RELATING TO THIS PROJECT ARE THE PROPERTY OF THE MARTIN ARCHITECTURAL GROUP. THE MARTIN ARCHITECTURAL GROUP RETAINS ALL COMMON LAW, STATUTE AND OTHER RESERVED RIGHTS INCLUDING THE COPY-RIGHT THERETO. REPRODUCTION OF THE MATERIAL HEREIN OR SUBSTANTIAL USE WITHOUT WRITTEN PERMISSION OF THE MARTIN ARCHITECTURAL GROUP VIOLATES THE COPYRIGHT LAWS OF THE UNITED STATES AND WILL BE SUBJECT TO LEGAL PROSECUTION.
©2022, The Martin Architectural Group, P.C.

NIC

REGISTERED ARCHITECT PENNSYLVANIA DREW ROMANIC No. RA009115

Professi
I hereby prepare or su laws of
Professi License Expiratic

THE MARTIN ARCHITECTURAL GROUP, P.C.
ARCHITECTS AND LAND PLANNERS
A PROFESSIONAL CORPORATION
240 NORTH 22ND STREET, PHILADELPHIA, PA, 19103
P (215) 665-1680 F (215) 561-5064

| | |
|---|---|
| P.A.: | DREW ROMANIC |
| P.M.: | JASON DECAMPLI |
| DRAWN BY: | MAG |
| PROJECT NO: | 1362-12 |

| NO. | REVISION | DATE |
|---|---|---|
| 1 | PERMIT SET | 12/20/22 |

DETAILS

**Granite Run Apartment 02**

MIDDLETOWN TOWNSHIP, PA

| | |
|---|---|
| SCALE: | AS NOTED |
| DATE: | 12/31/2017 |

**A5.02**

©2022, The Martin Architectural Group, P.C.

Printed: 1/13/2023 4:50:36 PM

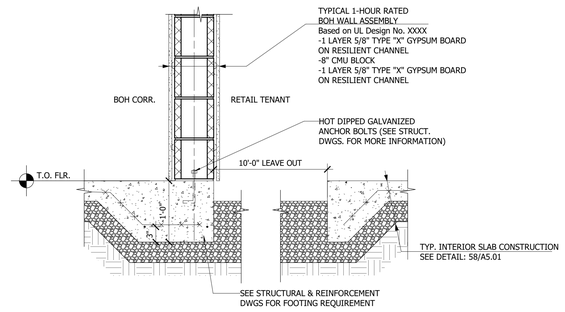


## 14 RETAIL SLAB LEAVE OUT DETAIL
SCALE : 1" = 1'-0"

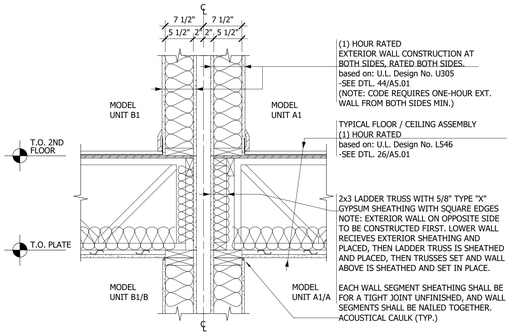


## 11 TYP. FLR/CLG AT BUILDING JOINT
SCALE : 1" = 1'-0"

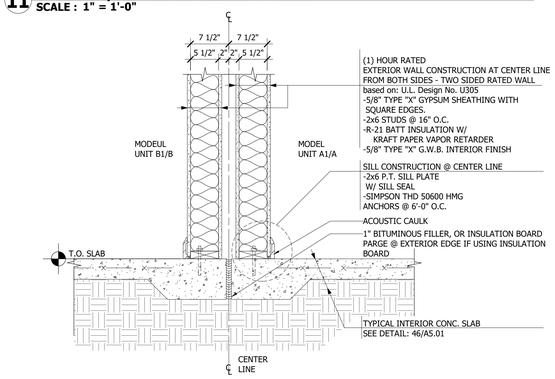


## 10 TYP. SLAB AT BUILDING JOINT
SCALE : 1" = 1'-0"

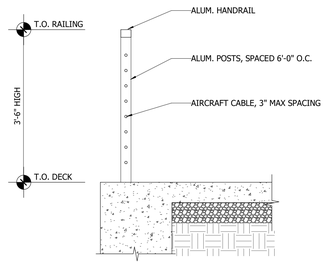


## 15 TYP. RAILING AT OUTDOOR AMENITIES
SCALE : 1" = 1'-0"

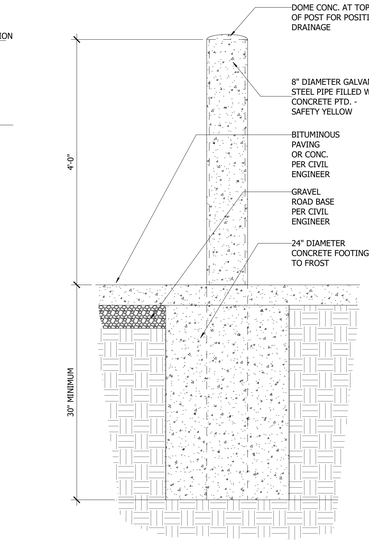


## 13 BOLLARD DETAIL
SCALE : 1" = 1'-0"

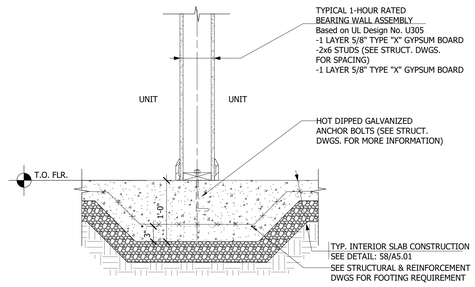


## 8 THICKENED SLAB AT INT. UNIT BEARING WALL
SCALE : 1" = 1'-0"

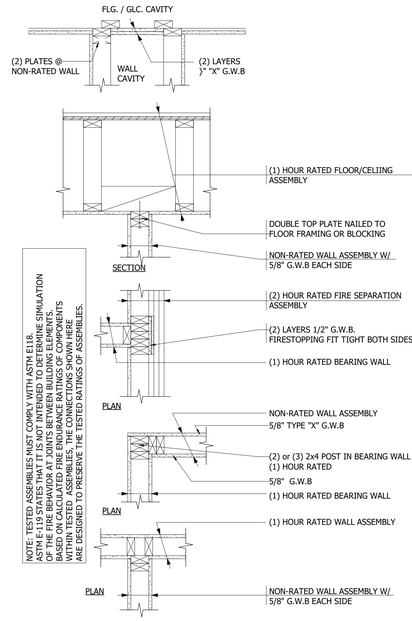


## 12 WALL AND CEILING INTERSECTIONS
SCALE : 1" = 1'-0"




## 9 PLAN - UNIT SEPARATION
SCALE : 1" = 1'-0"

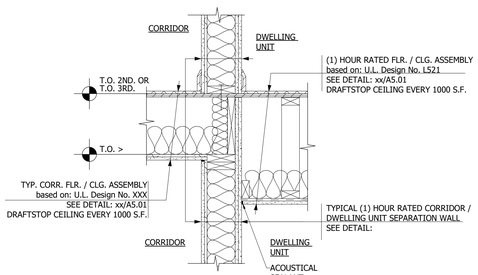


## 7 UNIT/ CORR. WALL - FLR/CLG ASSEMBLY
SCALE : 1" = 1'-0"

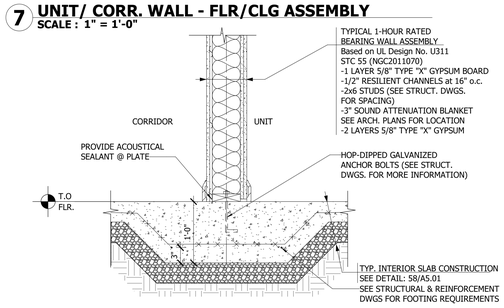


## 6 UNIT/ CORR. WALL - 1ST FLR
SCALE : 1" = 1'-0"

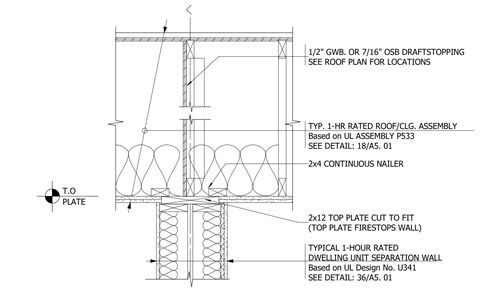


## 5 ROOF/ CEILING OVER UNIT SEPARATION
SCALE : 1" = 1'-0"

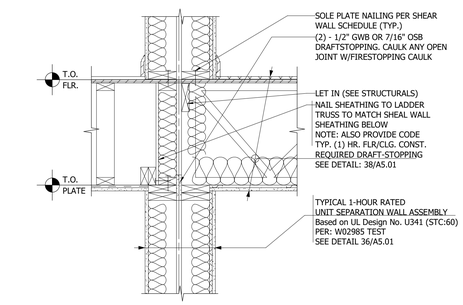


## 4 TYP. UNIT SEPARATION FLR/ CLG ASSEMBLY 3
SCALE : 1" = 1'-0"

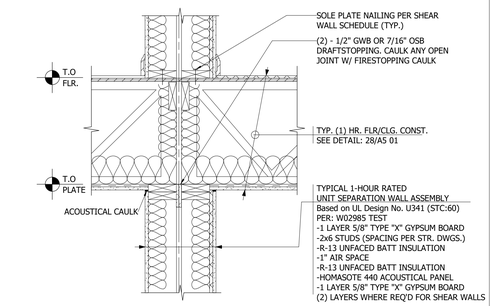


## 3 TYP. UNIT SEPARATION FLR/CLG ASSEMBLY 2
SCALE : 1" = 1'-0"

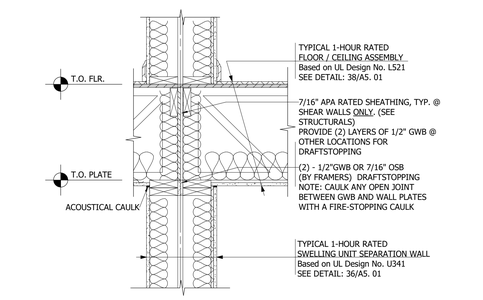


## 2 TYP. UNIT SEPARATION FLR/GLG ASSEMBLY
SCALE : 1" = 1'-0"

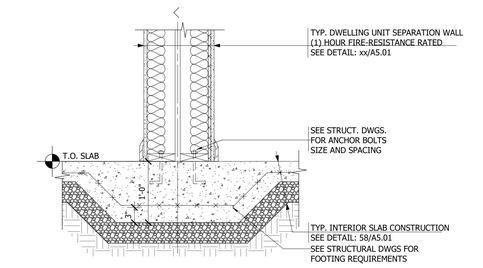


## 1 INT. THICKENED SLAB
SCALE : 1" = 1'-0"

ALL REPORTS, PLANS, SPECIFICATIONS AND COMPUTER FILES RELATING TO THIS PROJECT ARE THE PROPERTY OF THE MARTIN ARCHITECTURAL GROUP. THE MARTIN ARCHITECTURAL GROUP RETAINS ALL COMMON LAW, STATUTE AND OTHER RESERVED RIGHTS INCLUDING THE COPY-RIGHT THERETO. REPRODUCTION OF THE MATERIAL HEREIN OR SUBSTANTIAL USE WITHOUT WRITTEN PERMISSION OF THE MARTIN ARCHITECTURAL GROUP VIOLATES THE COPYRIGHT LAWS OF THE UNITED STATES AND WILL BE SUBJECT TO LEGAL PROSECUTION.
©2022, The Martin Architectural Group, P.C.

NTC

Professi
I hereby
prepare
of the
laws of

Professi
License
Expirati

THE MARTIN ARCHITECTURAL GROUP, P.C.
ARCHITECTS AND LAND PLANNERS
A PROFESSIONAL CORPORATION
240 NORTH 22ND STREET, PHILADELPHIA, PA, 19103
P (215) 665-1680 F (215) 561-5064

| | |
|---|---|
| P.A.: | DREW ROMANIC |
| P.M.: | JASON DECAMPLI |
| DRAWN BY: | MAG |
| PROJECT NO: | 1362-12 |

| NO. | REVISION | DATE |
|---|---|---|
| 1 | PERMIT SET | 12/20/22 |

DETAILS

**Granite Run Apartment 02**

MIDDLETOWN TOWNSHIP, PA

| | |
|---|---|
| SCALE: | AS NOTED |
| DATE: | 12/31/2017 |

**A5.03**

©2022, The Martin Architectural Group, P.C.

Printed: 1/13/2023 4:50:41 PM

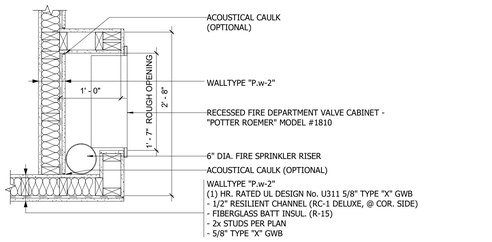


NOTE: THE FIRE SPRINKLER AND MECHANICAL CONTRACTORS NEED TO COORDINATE THEIR WORK TO PROVIDE THE NECESSARY SPACE REQUIRED IF ANY DISCREPANCY OR PROBLEMS DEVELOP THEY ARE TO NOTIFY THE ARCHITECT IMMEDIATELY BEFORE ANY WORK CAN BEGIN. ALTERNATE REQUIRMENTS MAY BE REQUIRED IF FIRE RATED CABINET IS PROVIDED.

## 58 FIRE DEPT. FIRE HOSE CONNECTION
SCALE : 1" = 1'-0"

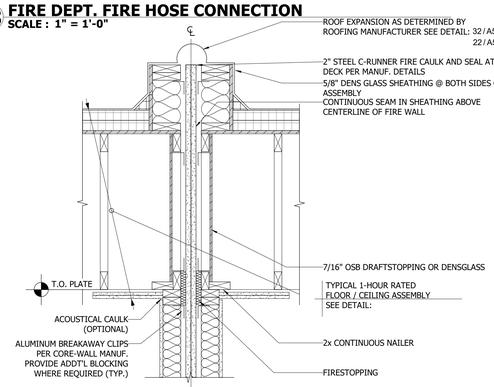


## 48 FIRE WALL @ ROOF/CEILING
SCALE : 1" = 1'-0"

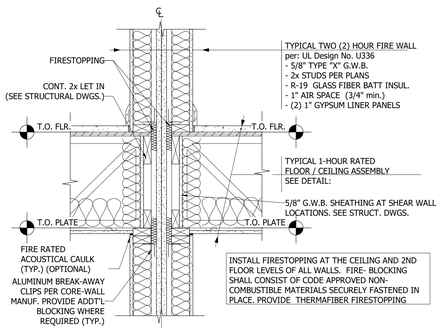


## 38 FIRE WALL @ FLR/CLG - PERPENDICULAR
SCALE : 1" = 1'-0"

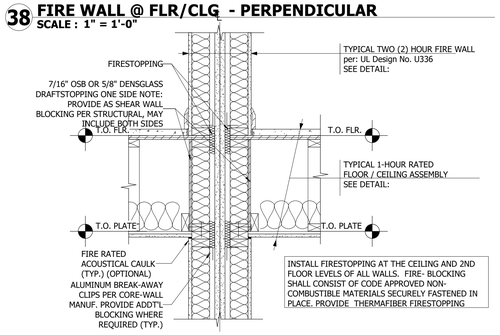


## 28 FIRE WALL @ FLR/CLG - PARALLEL
SCALE : 1" = 1'-0"

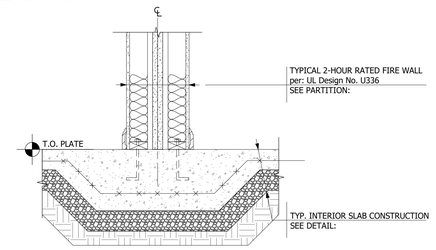


## 18 FIRE WALL @ THICKENED SLAB
SCALE : 1" = 1'-0"

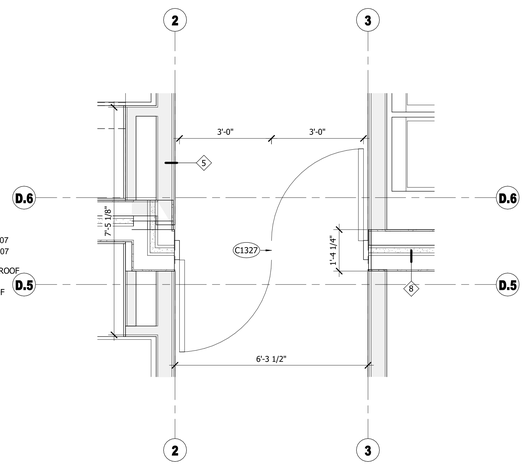


## 46 FIRE WALL 1
SCALE : 1/2" = 1'-0"

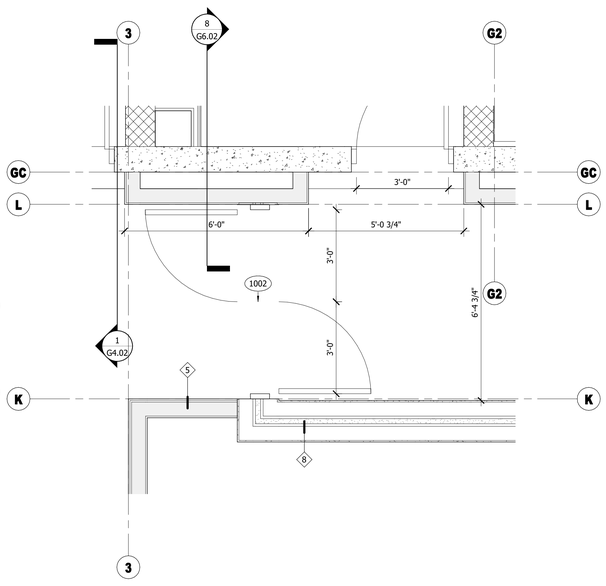


## 44 FIRE WALL 2
SCALE : 1/2" = 1'-0"

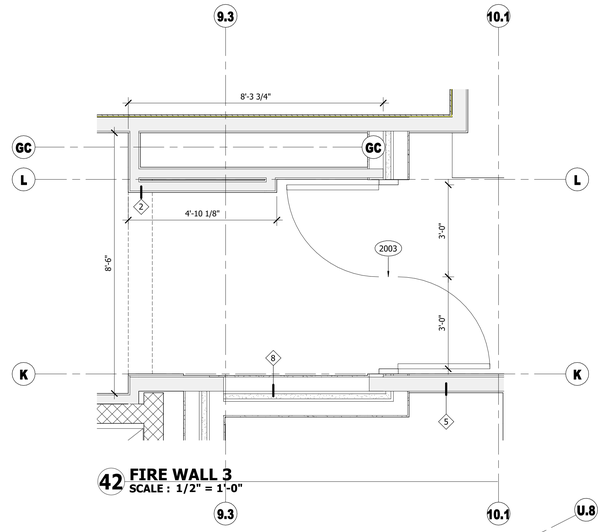


## 42 FIRE WALL 3
SCALE : 1/2" = 1'-0"

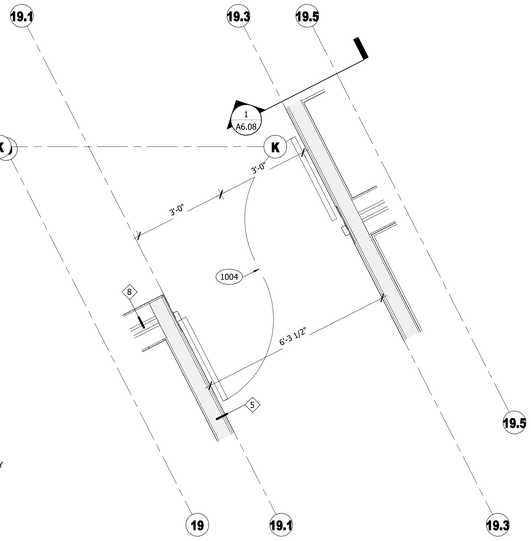


## 36 FIRE WALL 4
SCALE : 1/2" = 1'-0"

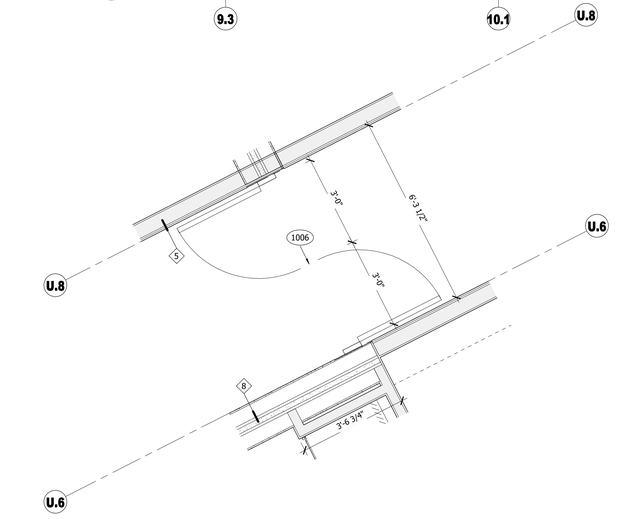


## 34 FIRE WALL 5
SCALE : 1/2" = 1'-0"

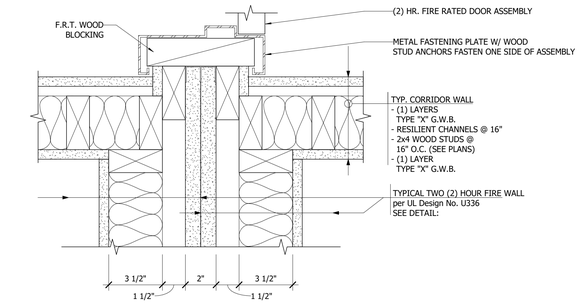


## 26 DOOR JAMB AT 2 HR FIREWALL
SCALE : 3" = 1'-0"

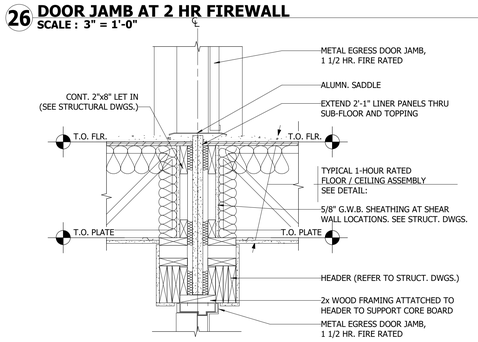


## 16 DOOR OPENING IN 2HR FIREWALL
SCALE : 1" = 1'-0"




**EXAMPLE PICTURE IS JUST FOR REFERENCE.** ALL FINISHES, JOINTS, AND LIGHTING AS PER INTERIOR DESIGN DRAWINGS.

## 14 HOLD OPEN DOOR EXAMPLE
SCALE : 1" = 1'-0"

ALL REPORTS, PLANS, SPECIFICATIONS AND COMPUTER FILES RELATING TO THIS PROJECT ARE THE PROPERTY OF THE MARTIN ARCHITECTURAL GROUP. THE MARTIN ARCHITECTURAL GROUP RETAINS ALL COMMON LAW, STATUTE AND OTHER RESERVED RIGHTS INCLUDING THE COPY-RIGHT THERETO. REPRODUCTION OF THE MATERIAL HEREIN OR SUBSTANTIAL USE WITHOUT WRITTEN PERMISSION OF THE MARTIN ARCHITECTURAL GROUP VIOLATES THE COPYRIGHT LAWS OF THE UNITED STATES AND WILL BE SUBJECT TO LEGAL PROSECUTION.
©2022, The Martin Architectural Group, P.C.

REGISTERED ARCHITECT COMMONWEALTH OF PENNSYLVANIA DREW ROMANIC No. RA-020115

THE MARTIN ARCHITECTURAL GROUP, P.C.
ARCHITECTS AND LAND PLANNERS
A PROFESSIONAL CORPORATION
240 NORTH 22ND STREET, PHILADELPHIA, PA, 19103
P (215) 665-1680 F (215) 561-5064

| | |
|---|---|
| P.A.: | DREW ROMANIC |
| P.M.: | JASON DECAMPLI |
| DRAWN BY: | Author |
| PROJECT NO: | 1362-12 |

| NO. | REVISION | DATE |
|---|---|---|
| 1 | PERMIT SET | 12/20/22 |

DETAILS (FIRE WALL)

**Granite Run Apartment 02**

MIDDLETOWN TOWNSHIP, PA

SCALE:

DATE: 07/13/22

**A5.04**

©2022, The Martin Architectural Group, P.C.

Printed: 1/13/2023 4:50:47 PM

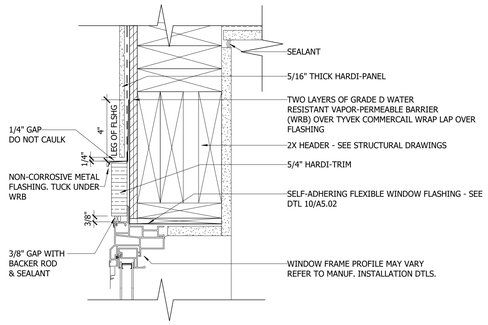


DTL22-A500

## 6 DTL-22 A-500
**SCALE : 3" = 1'-0"**




DTL-32-A500

## 5 DTL-32 A500
**SCALE : 3" = 1'-0"**

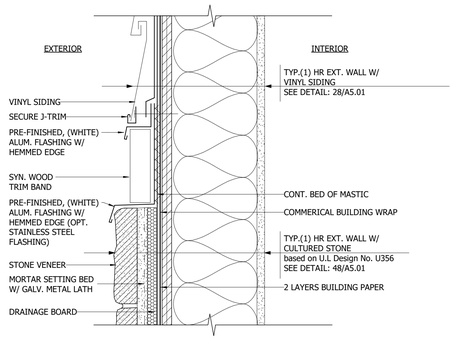


DTL-46A

## 7 DTL-46A
**SCALE : 3" = 1'-0"**

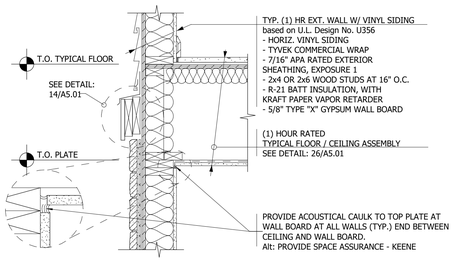


DTL-02A: EXTERIOR WALL AT STONE TO VINYL TRANSITION

## 8 EXT. WALL @ STONE TO VINYL TRANSITION
**SCALE : 1" = 1'-0"**

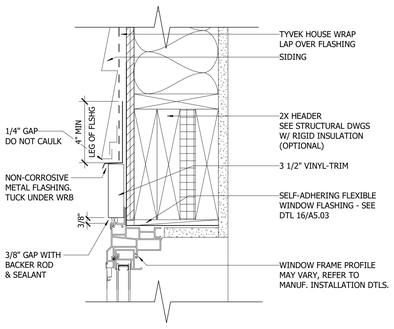


DTL-28

## 4 DTL-28
**SCALE : 3" = 1'-0"**

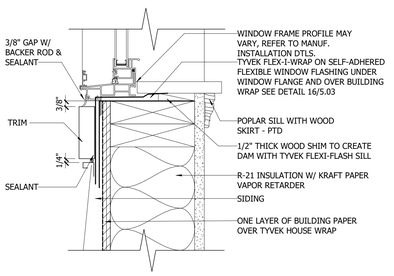


DTL-27

## 3 DTL-27
**SCALE : 3" = 1'-0"**

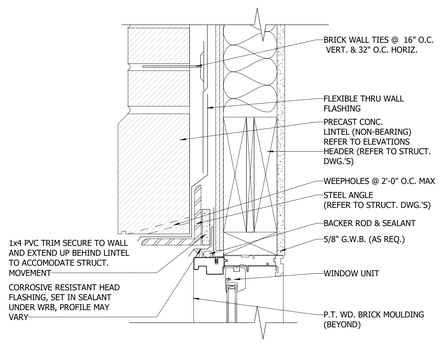


DTL-26

## 9 DTL 26
**SCALE : 1" = 1'-0"**

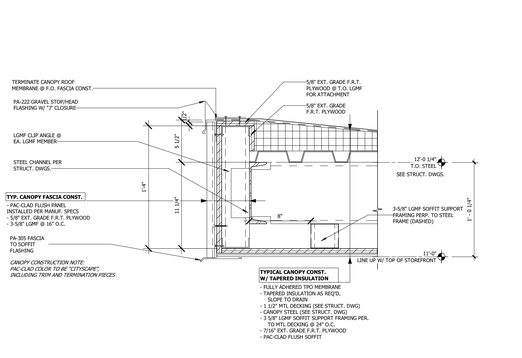


## 10 CANOPY CONST. @ EXT. WALL
**SCALE : 1 1/2" = 1'-0"**




## 11 TYP. CANOPY CONST
**SCALE : 1 1/2" = 1'-0"**

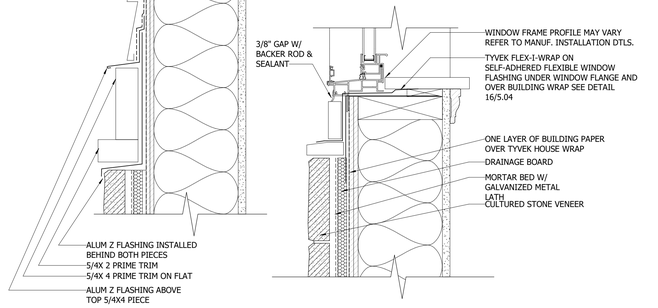


DTL-25

## 2 DTL-25
**SCALE : 1" = 1'-0"**

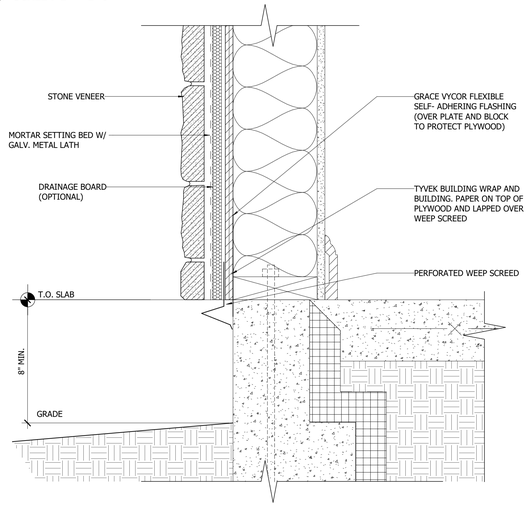


## 1 ENLARGED SLAB ON GRADE @ STONE VENEER
**SCALE : 3" = 1'-0"**

ALL REPORTS, PLANS, SPECIFICATIONS AND COMPUTER FILES RELATING TO THIS PROJECT ARE THE PROPERTY OF THE MARTIN ARCHITECTURAL GROUP. THE MARTIN ARCHITECTURAL GROUP RETAINS ALL COMMON LAW, STATUTE AND OTHER RESERVED RIGHTS INCLUDING THE COPY-RIGHT THERETO. REPRODUCTION OF THE MATERIAL HEREIN OR SUBSTANTIAL USE WITHOUT WRITTEN PERMISSION OF THE MARTIN ARCHITECTURAL GROUP VIOLATES THE COPYRIGHT LAWS OF THE UNITED STATES AND WILL BE SUBJECT TO LEGAL PROSECUTION.
©2022, The Martin Architectural Group, P.C.

REGISTERED ARCHITECT COMMONWEALTH OF PENNSYLVANIA DREW ROMANIC No. RA-020015

THE MARTIN ARCHITECTURAL GROUP, P.C.
ARCHITECTS AND LAND PLANNERS
A PROFESSIONAL CORPORATION
240 NORTH 22ND STREET, PHILADELPHIA, PA, 19103
P (215) 665-1600 F (215) 561-5064

| | |
|---|---|
| P.A.: | DREW ROMANIC |
| P.M.: | JASON DECAMPLI |
| DRAWN BY: | Author |
| PROJECT NO: | 1362-12 |

| NO. | REVISION | DATE |
|---|---|---|
| 1 | PERMIT SET | 12/2022 |

DETAILS
**Granite Run Apartment 02**
MIDDLETOWN TOWNSHIP, PA

SCALE:
DATE: 07/13/22

**A5.05**

©2022, The Martin Architectural Group, P.C.

Printed: 1/13/2023 4:50:51 PM

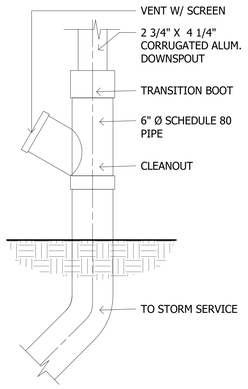


## 1 GUTTER & DOWNSPOUTS
**SCALE : 1/2" = 1'-0"**

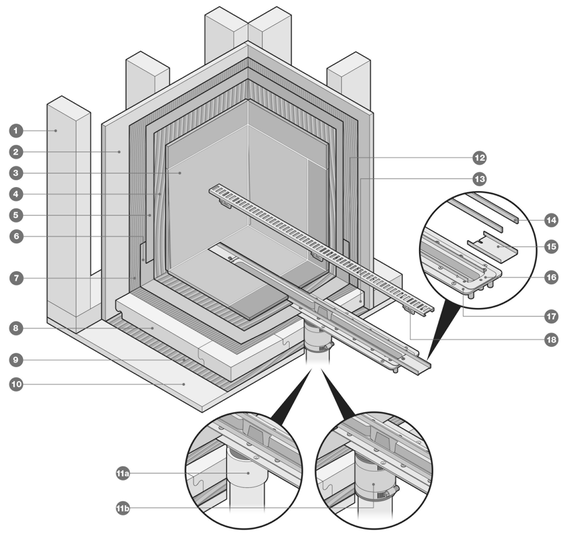


1 STUD WALL
2 BACKER BOARD
3 WALL TILE AND GROUT
4 THIN-SET (FOR WALL TILE)
5 SHEET WALL WATERPROOFING
6 SHEET SHOWER PAN WATERPROOFING
7 THIN-SET
8 PRE-SLOPED INTERLOCKING PET FOAM PANELS
9 THIN-SET
10 SUB-FLOOR
11A PVC TO PVC CONNECTION
11B SHIELDED NO-HUB COUPLING
12 DRAIN COVER
13 PRE-SLOPED INTERLOCKING DRAIN SUPPORT FRAME
14 COVER CHANEL
15 TROUGH EXTENSION
16 CLAMPING COLLAR
17 DRAIN BODY
18 HEIGHT ADJUSTABLE SPACER

NOTE: REFER TO MANUF. DRAWINGS -- SHOWERLINE DRAIN BY QUICKDRAIN USA

## 4 LINEAR SHOWER DRAIN ISO
**SCALE : 1" = 1'-0"**




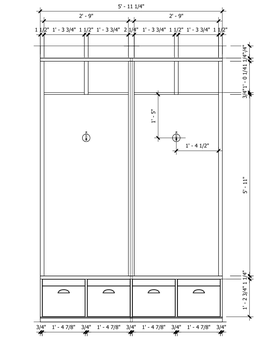


## 2 LARGE CUBBY DETAIL
**SCALE : 1/2" = 1'-0"**

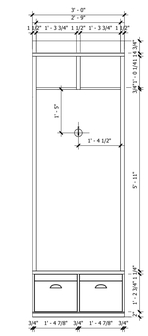


## 3 SMALL CUBBY DETAIL
**SCALE : 1/2" = 1'-0"**




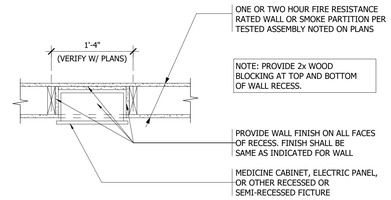


## 40 TYP. RECESSED CABINET/ PANEL
**SCALE : 1" = 1'-0"**

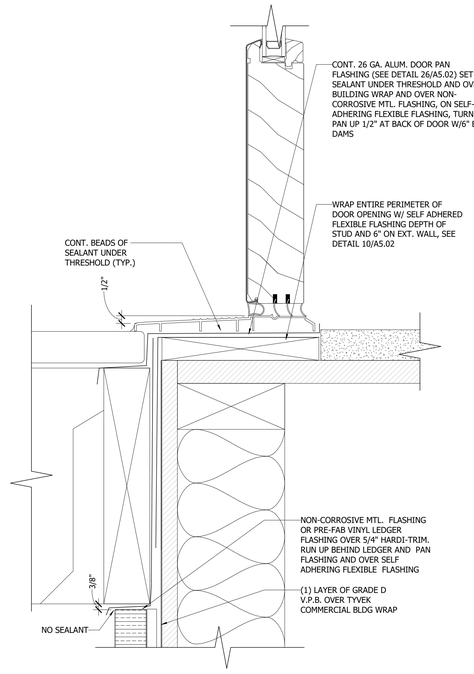


## 26 ENLARGED SWING DOOR SILL @ BALCONY
**SCALE : 3" = 1'-0"**

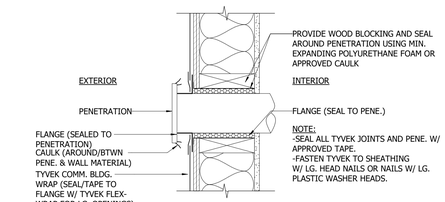


## 24 TYP. EXT. WALL PENETRATION
**SCALE : 1" = 1'-0"**

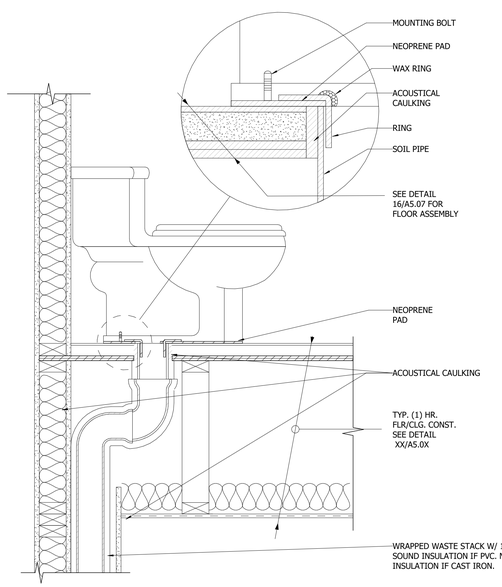


## 32 TYP. FLOOR TRANSITIONS
**SCALE : 3" = 1'-0"**

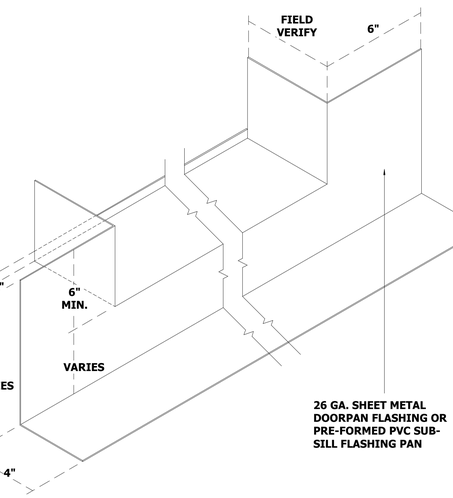


## 16 ENLARGED SWING DOOR SILL @ PATIO
**SCALE : 3" = 1'-0"**




## 14 DOOR PAN FLASHING
**SCALE : 1/2" = 1'-0"**




## 12 TYP. DETAIL AT TOILET
**SCALE : 1 1/2" = 1'-0"**

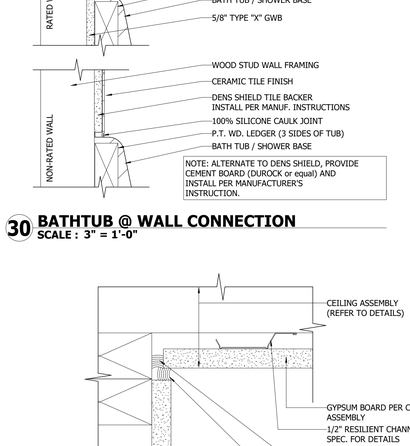


## 30 BATHTUB @ WALL CONNECTION
**SCALE : 3" = 1'-0"**




## 20 TYP. WALL TO CEILING GWB CONNECTION
**SCALE : 6" = 1'-0"**

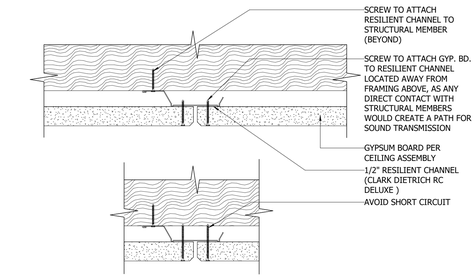


## 10 TYP. DETAIL AT RESILIENT CHANNEL
**SCALE : 6" = 1'-0"**

ALL REPORTS, PLANS, SPECIFICATIONS AND COMPUTER FILES RELATING TO THIS PROJECT ARE THE PROPERTY OF THE MARTIN ARCHITECTURAL GROUP. THE MARTIN ARCHITECTURAL GROUP RETAINS ALL COMMON LAW, STATUTE AND OTHER RESERVED RIGHTS INCLUDING THE COPY-RIGHT THERETO. REPRODUCTION OF THE MATERIAL HEREIN OR SUBSTANTIAL USE WITHOUT WRITTEN PERMISSION OF THE MARTIN ARCHITECTURAL GROUP VIOLATES THE COPYRIGHT LAWS OF THE UNITED STATES AND WILL BE SUBJECT TO LEGAL PROSECUTION.
©2022, The Martin Architectural Group, P.C.

NIC

REGISTERED ARCHITECT COMMONWEALTH OF PENNSYLVANIA ROMANIC No. 404078

Professi
I hereby prepare this for laws of

Professi License Expiratic

THE MARTIN ARCHITECTURAL GROUP, P.C.
ARCHITECTS AND LAND PLANNERS
A PROFESSIONAL CORPORATION
240 NORTH 22ND STREET, PHILADELPHIA, PA, 19103
P (215) 665-1080 F (215) 561-5064

| | |
|---|---|
| P.A.: | DREW ROMANIC |
| P.M.: | JASON DECAMPLI |
| DRAWN BY: | HUANG/BUTTERMAN |
| PROJECT NO: | 1362-12 |

| NO. | REVISION | DATE |
|---|---|---|
| 1 | PERMIT SET | 12/20/22 |

DETAILS

**Granite Run Apartment 02**

MIDDLETOWN TOWNSHIP, PA

| | |
|---|---|
| SCALE: | AS NOTED |
| DATE: | 12/31/2017 |

**A5.06**

©2022, The Martin Architectural Group, P.C.

Printed: 1/13/2023 4:50:56 PM

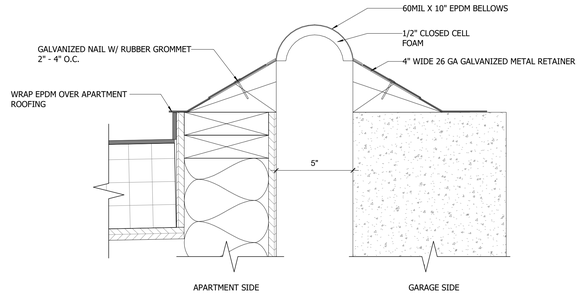


**40 TYP. EXPANSION JOINT AT ROOF**
SCALE : 3" = 1'-0"

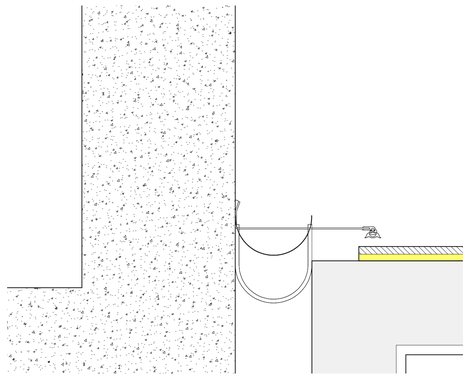

**32 TYP. EXPANSION JOINT AT EXT. WALL CORNER**
SCALE : 3" = 1'-0"

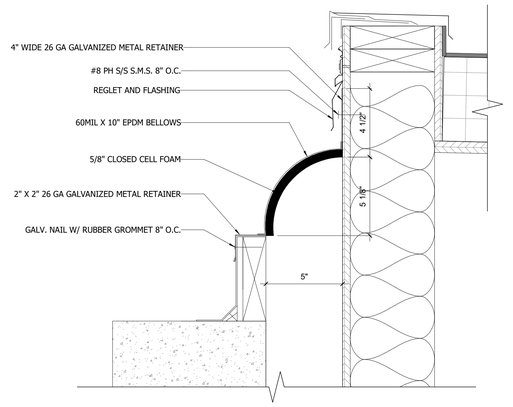


**30 ALT. EXPANSION JOINT AT ROOF**
SCALE : 3" = 1'-0"

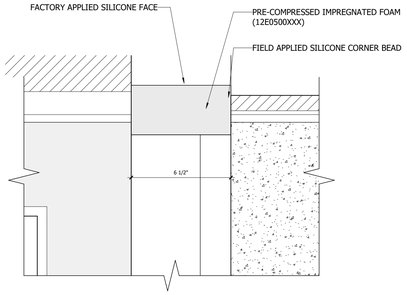


**22 TYP. EXP. JOINT AT EXT. WALLS**
SCALE : 3" = 1'-0"

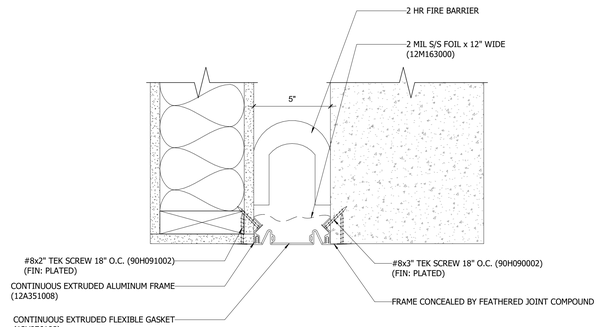


**20 TYP. EXP. JOINT AT INT. WALL / CEILING**
SCALE : 3" = 1'-0"

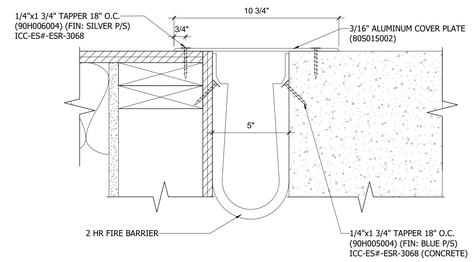


**10 TYP. EXPANSION JOINT AT FLOOR**
SCALE : 3" = 1'-0"

ALL REPORTS, PLANS, SPECIFICATIONS AND COMPUTER FILES RELATING TO THIS PROJECT ARE THE PROPERTY OF THE MARTIN ARCHITECTURAL GROUP. THE MARTIN ARCHITECTURAL GROUP RETAINS ALL COMMON LAW, STATUTE AND OTHER RESERVED RIGHTS INCLUDING THE COPYRIGHT THERETO. REPRODUCTION OF THE MATERIAL HEREIN OR SUBSTANTIAL USE WITHOUT WRITTEN PERMISSION OF THE MARTIN ARCHITECTURAL GROUP VIOLATES THE COPYRIGHT LAWS OF THE UNITED STATES AND WILL BE SUBJECT TO LEGAL PROSECUTION.
©2022, The Martin Architectural Group, P.C.




THE MARTIN ARCHITECTURAL GROUP, P.C.
ARCHITECTS AND LAND PLANNERS
A PROFESSIONAL CORPORATION
240 NORTH 22ND STREET, PHILADELPHIA, PA, 19103
P (215) 665-1080 F (215) 561-5064

| | |
|---|---|
| P.A.: | DREW ROMANIC |
| P.M.: | JASON DECAMPLI |
| DRAWN BY: | Author |
| PROJECT NO: | 1362-12 |

| NO. | REVISION | DATE |
|---|---|---|
| 1 | PERMIT SET | 12/20/22 |

EXPANSION JOINT DETAILS
**Granite Run Apartment 02**
MIDDLETOWN TOWNSHIP, PA

SCALE:
DATE: 07/13/22

**A5.07**

©2022, The Martin Architectural Group, P.C.

Printed: 1/13/2023 4:50:59 PM

**B.O.D.: ARCHITRACK WOOD TERRACE ON PEDESTALS**
**https://www.archatrak.com/structural-wood-deck-tiles/pedestal-supported-tiles/**

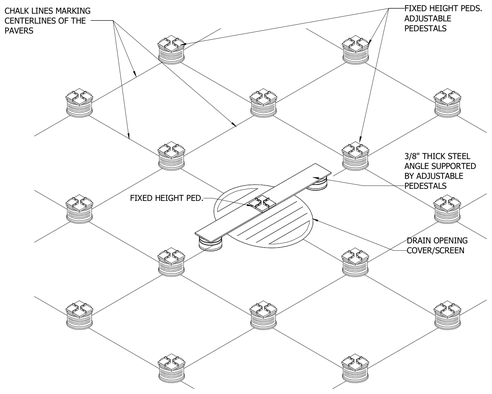


NOTE: THE ADJUSTABLE PEDESTALS THAT ARE PLACED TO SUPPORT THE STEEL PLATE MUST BE SET TO THE HEIGHT OF THE SURROUNDING PEDESTALS, MINUS THE THICKNESS OF THE STEEL PLATE.

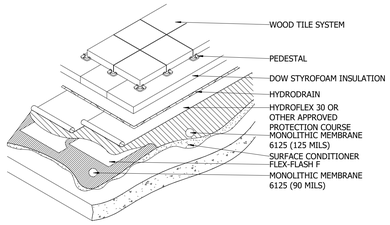


FABRIC REINFORCED ASSEMBLY

FOR NEW CONCRETE SUBSTRATES AND ALL REHAB APPLICATIONS.

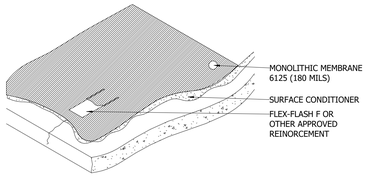


STANDARD ASSEMBLY

FOR NEW CONCRETE SUBSTRATES.

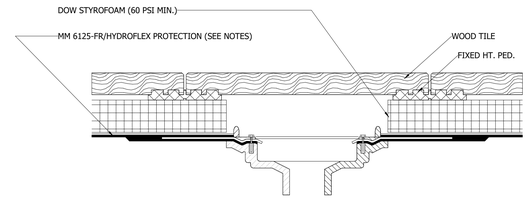


WHEN PAVER SUPPORTS CAN BE PLACED AROUND THE DRAIN

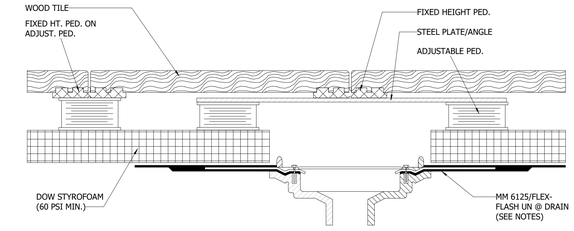


WHEN PAVER SUPPORTS LINE UP OVER DRAIN

REF. UA-5B FOR ISOMETRIC LAYOUT

NOTES: IF DOW STYROFOAM INSULATION IS USED, IT MUST BE 60 PSI (COMPRESSIVE STRENGTH) BOARD MINIMUM.

VARIOUS ADJUSTABLE PEDESTAL SYSTEMS ARE AVAILABLE, ALLOWING HEIGHT ADJUSTMENTS >2" - SOME HAVE INTEGRAL JOINT SPACERS, ELIMINATING THE NEED FOR FIXED HEIGHT PEDESTALS ON TOP.

ADJUSTMENTS FOR SLOPE CAN BE MADE IN A NUMBER OF WAYS DEPENDING UPON THE ADJUSTABLE PEDESTAL SYSTEM USED. SHIMS ARE USED FOR MINOR LEVEL ADJUSTMENTS.

REFER TO APPLICABLE MM 6125-FR ROOFING OR WATERPROOFING GUIDELINE DETAILS FOR PROPER MEMBRANE/FLASHING DETAILS AND ALTERNATIVES.

## 10 INSTALLATION DETAIL AT DRAINS
**SCALE : 1 1/2" = 1'-0"**

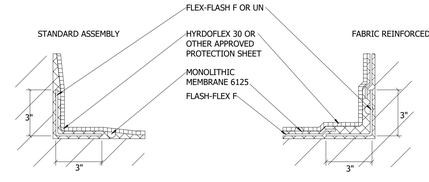


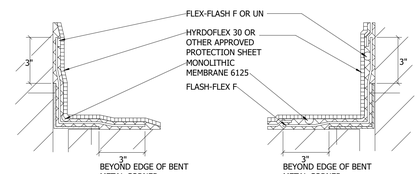


NOTE: FLASH-FLEX F MAY BE USED AT ALL CONCRETE-TO-CONCRETE AND ALL CONCRETE-TO-CONCRETE BLOCK TRANSITIONS. FLASH-FLEX UN MUST BE USED AT ALL OTHER TRANSITIONS

## 20 ALTERNATE CORNER TRANSITIONS
**SCALE : 3" = 1'-0"**

EARTH COVER (PLANTER, LANDSCAPE)

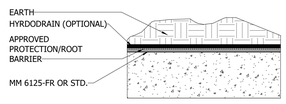


PLAZA/TERRACE (TILE/PAVER IN SETTING BED)

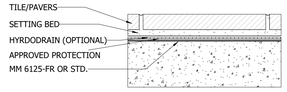


PLAZA/TERRACE (OPEN-JOINT PAVERS)

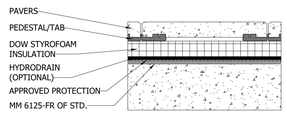


NOTES: WHEN DOW STYROFOAM IS INSTALLED DIRECTLY UNDER AN IMPERVIOUS SURFACE (i.e., TOPPING SLAB, SETTING BED, ETC.) AN AIR LAYER (HYDRODRAIN) MUST BE INSTALLED ON TOP OF THE FOAM.

REFERENCE HYDROTECH'S ULTIMATE ASSEMBLY GUIDELINE DETAILS FOR SPECIFIC PAVER APPLICATION DETAILS.

## 14 MATERIAL APPLICATIONS
**SCALE : 3" = 1'-0"**

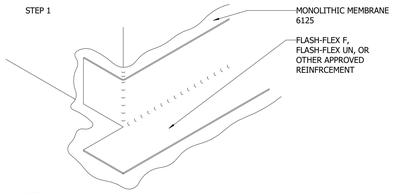


STEP 3 COMPLETELY ENCAPSULATE ALL EXPOSED REINFORCING WITH A TOP COATING OF MONOLITHIC MEMBRANE 6125. NO REINFORCING SHOULD BE LEFT EXPOSED OVER NIGHT

## 16 INSTALLATION AT DRAIN ISOMETRIC LAYOUT
**SCALE : 3" = 1'-0"**

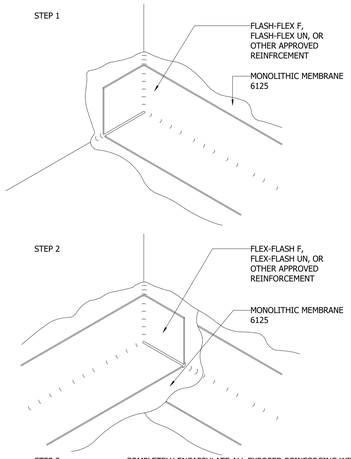


STEP 3 COMPLETELY ENCAPSULATE ALL EXPOSED REINFORCING WITH A TOP COATING OF MONOLITHIC MEMBRANE 6125. NO REINFORCING SHOULD BE LEFT EXPOSED OVER NIGHT

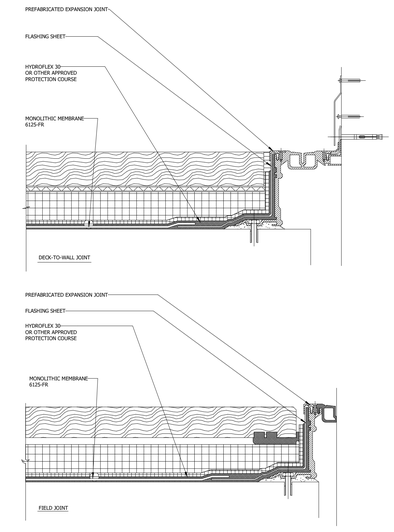


NOTES: MANUFACTURERS OF PREFABRICATED EXPANSION JOINT SYSTEMS MUST BE CONSULTED FOR SPECIFIC PRODUCT AND INSTALLATION INFORMATION.

## 28 ALTERNATE PREFABRICATED EXPANSION JOINTS
**SCALE : 3" = 1'-0"**

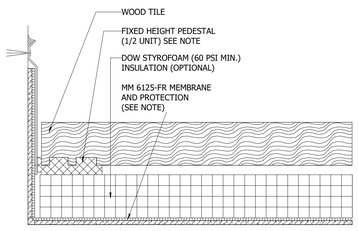


NOTES: IF DOW STYROFOAM INSULATION IS USED, IT MUST BE 60 PSI (COMPRESSIVE STRENGTH) BOARD MINIMUM.

THE PEDESTAL SHOWN IS 1/2 A TYPICAL UNIT, WITH THE TRANSVERSE SPACER LUGS LEFT INTACT TO MAINTAIN THE APPROPRIATE JOINT SPACE AT TERMINATION.

MINOR LEVEL ADJUSTMENTS CAN BE MADE BY PLACING SHIMS UNDERNEATH THE PEDESTAL SHIMS PLACED ON TOP OF THE PEDESTAL MUST NOT EXCEED THE HEIGHT OF THE SPACER LUGS.

REFER TO APPLICABLE MM 6125-FR ROOFING OR WATERPROOFING GUIDELINE DETAILS FOR PROPER MEMBRANE/FLASHING DETAILS AND ALTERNATIVES.

## 38 TYPICAL TERMINATION AT WALL/PARAPET/CURB
**SCALE : 1 1/2" = 1'-0"**

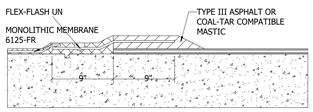


BUILT-UP MEMBRANE (ASPHALT OR COAL TAR)

NOTE: CHECK WITH OTHER WATERPROOFING MATERIAL SUPPLIER FOR SPECIFIC TIE-IN INSTRUCTIONS.

FOR HORIZONTAL TIE-INS. A 1/2" X 1/2" REGLET MUST BE CUT INTO THE DECK TO PROVIDE A WATER STOP FOR THE MEMBRANE.

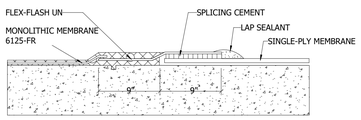


SINGLE-PLY MEMBRANE

NOTE: CHECK WITH OTHER WATERPROOFING MATERIAL SUPPLIER FOR SPECIFIC TIE-IN INSTRUCTIONS.

FOR HORIZONTAL TIE-INS. A 1/2" X 1/2" REGLET MUST BE CUT INTO THE DECK TO PROVIDE A WATER STOP FOR THE MEMBRANE.

## 36 TYPICAL TIE-IN DETAILS
**SCALE : 3" = 1'-0"**

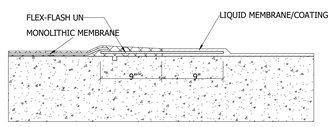


LIQUID MEMBRANE/COATING

NOTE: CHECK WITH OTHER WATERPROOFING MATERIAL SUPPLIER FOR SPECIFIC TIE-IN INSTRUCTIONS.

FOR HORIZONTAL TIE-INS, A 1/2" X 1/2" REGLET MUST BE CUT INTO THE DECK TO PROVIDE A WATER STOP FOR THE MEMBRANE.

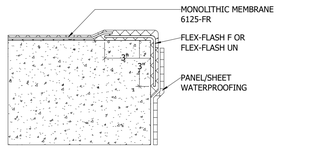


VERTICAL WALL

NOTE: CHECK WITH OTHER WATERPROOFING MATERIAL SUPPLIER FOR SPECIFIC TIE-IN INSTRUCTIONS.

## 34 TYPICAL DRAIN DETAILS
**SCALE : 1 1/2" = 1'-0"**

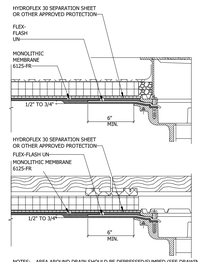


NOTES: AREA AROUND DRAIN SHOULD BE DEPRESSED/SLOPED (SEE DRAWING) TO PROMOTE POSITIVE WATER DRAINAGE

REINFORCEMENT SHALL BE ONE SHEET EXTENDING A MINIMUM OF 6" BEYOND THE DRAIN FLANGE ON ALL SIDES AND SECURED IN CLAMPING RING AT DRAIN.

ALL DRAINS ARE REQUIRED TO HAVE FLASHING CLAMPING RING ASSEMBLIES. CONSULT SPECIFIC DRAIN MANUFACTURER FOR ADDL. ACCESSORIES (i.e., DEBRIS SCREENS, LOW PROFILE DOMES, EXTENSIONS, ETC.)

## 32 TYPICAL CURB DETAILS
**SCALE : 1 1/2" = 1'-0"**

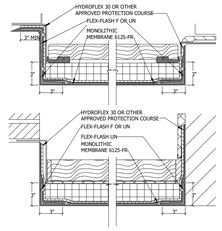


NOTE: FLEX-FLASH F MAY BE USED AT ALL CONCRETE-TO-CONCRETE AND CONCRETE-TO-CONCRETE BLOCK TRANSITIONS. FLEX-FLASH UN MUST BE USED AT ALL OTHER TRANSITIONS (i.e., CONC. DECK-TO-GYPSUM BOARD, ETC.).

ALL REPORTS, PLANS, SPECIFICATIONS AND COMPUTER FILES RELATING TO THIS PROJECT ARE THE PROPERTY OF THE MARTIN ARCHITECTURAL GROUP. THE MARTIN ARCHITECTURAL GROUP RETAINS ALL COMMON LAW, STATUTE AND OTHER RESERVED RIGHTS INCLUDING THE COPY-RIGHT THERETO. REPRODUCTION OF THE MATERIAL HEREIN OR SUBSTANTIAL USE WITHOUT WRITTEN PERMISSION OF THE MARTIN ARCHITECTURAL GROUP VIOLATES THE COPYRIGHT LAWS OF THE UNITED STATES AND WILL BE SUBJECT TO LEGAL PROSECUTION.
©2022, The Martin Architectural Group, P.C.

REGISTERED ARCHITECT COMMONWEALTH OF PENNSYLVANIA DREW ROMANIC No. RA-020978

THE MARTIN ARCHITECTURAL GROUP, P.C.
ARCHITECTS AND LAND PLANNERS
A PROFESSIONAL CORPORATION
240 NORTH 22ND STREET, PHILADELPHIA, PA, 19103
P (215) 665-1680 F (215) 561-5064

| | |
|---|---|
| P.A.: | DREW ROMANIC |
| P.M.: | JASON DECAMPLI |
| DRAWN BY: | MAG |
| PROJECT NO: | 1362-12 |

| NO. | REVISION | DATE |
|---|---|---|
| 1 | PERMIT SET | 12/20/22 |

PEDESTAL DETAILS
**Granite Run Apartment 02**
MIDDLETOWN TOWNSHIP, PA

| | |
|---|---|
| SCALE: | AS NOTED |
| DATE: | 04/15/22 |

**A5.08**

©2022, The Martin Architectural Group, P.C.

Printed: 1/13/2023 4:51:03 PM

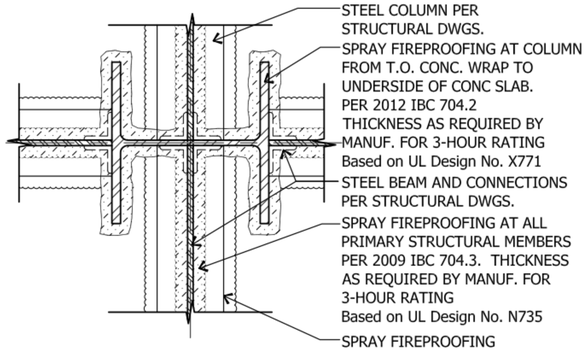


**2 STEEL COLUMN DETAIL**
SCALE : 1/4" = 1'-0"

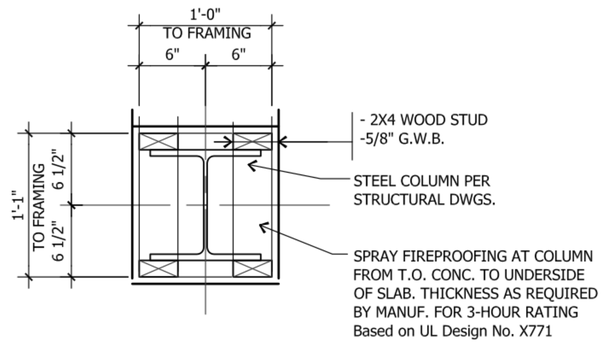


**3 STEEL COLUMN PLAN - 1 HR FIRE RATED**
SCALE : 1/4" = 1'-0"

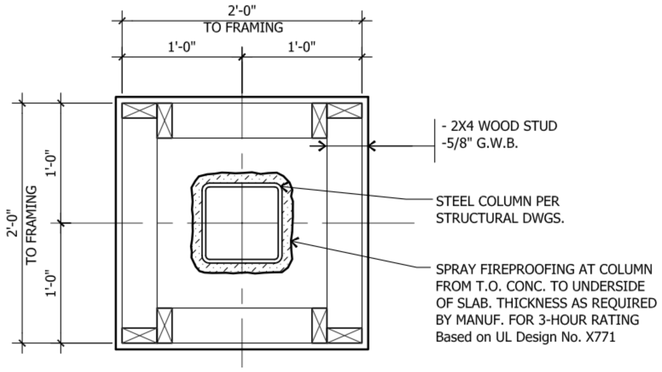


**4 STEEL COLUMN DETAIL - 1 HR FIRE RATED**
SCALE : 1/4" = 1'-0"

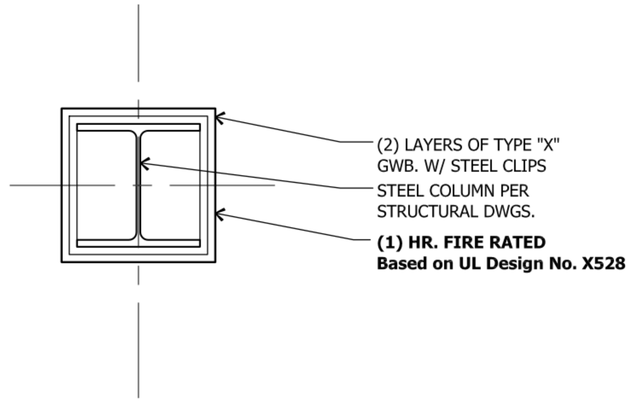


**5 STEEL COLUMN PLAN - 1 HOUR FIRE RATED**
SCALE : 1/4" = 1'-0"

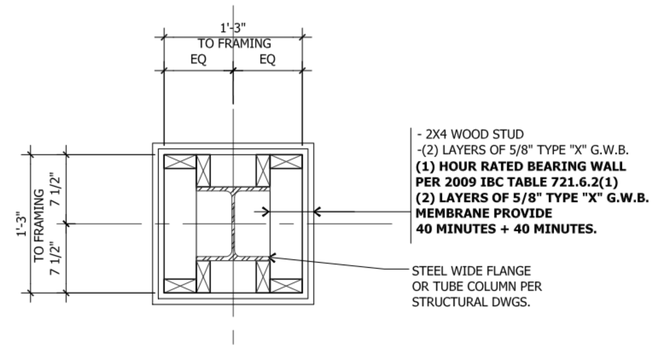


**6 STEEL COLUMN DETAIL - 1 HOUR FIRE RATED**
SCALE : 1/4" = 1'-0"

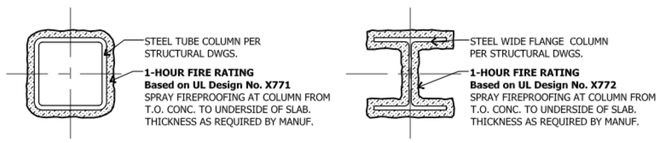


**7 STEEL COLUMN PLAN - FIRE RATED**
SCALE : 1/4" = 1'-0"

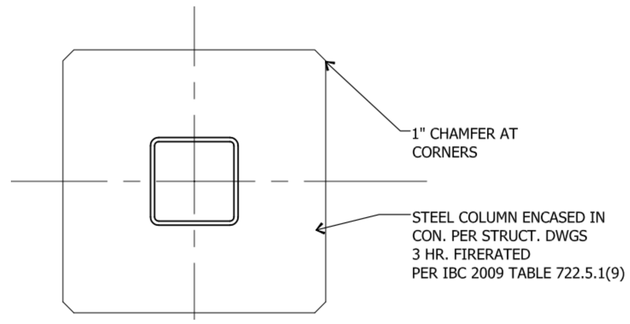


**8 STEEL COLUMN DETAIL - 3 HR FIRE RATED**
SCALE : 1/4" = 1'-0"

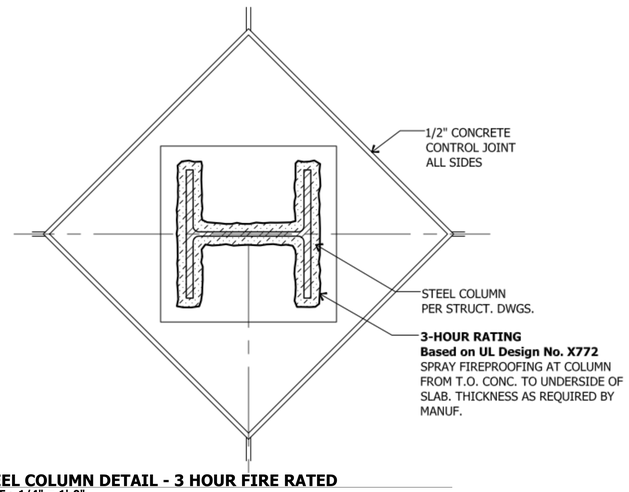


**10 STEEL COLUMN DETAIL - 3 HOUR FIRE RATED**
SCALE : 1/4" = 1'-0"

ALL REPORTS, PLANS, SPECIFICATIONS AND COMPUTER FILES RELATING TO THIS PROJECT ARE THE PROPERTY OF THE MARTIN ARCHITECTURAL GROUP. THE MARTIN ARCHITECTURAL GROUP RETAINS ALL COMMON LAW, STATUTE AND OTHER RESERVED RIGHTS INCLUDING THE COPY-RIGHT THERETO. REPRODUCTION OF THE MATERIAL HEREIN OR SUBSTANTIAL USE WITHOUT WRITTEN PERMISSION OF THE MARTIN ARCHITECTURAL GROUP VIOLATES THE COPYRIGHT LAWS OF THE UNITED STATES AND WILL BE SUBJECT TO LEGAL PROSECUTION.
©2022, The Martin Architectural Group, P.C.

NIC

Professi
I hereby prepare this for laws of

Professi License Expirati

THE MARTIN ARCHITECTURAL GROUP, P.C.
ARCHITECTS AND LAND PLANNERS
A PROFESSIONAL CORPORATION
240 NORTH 22ND STREET, PHILADELPHIA, PA, 19103
P (215) 665-1680 F (215) 561-5064

| | |
|---|---|
| P.A.: | DREW ROMANIC |
| P.M.: | JASON DECAMPLI |
| DRAWN BY: | Author |
| PROJECT NO: | 1362-12 |

| NO. | REVISION | DATE |
|---|---|---|
| 1 | PERMIT SET | 12/20/22 |

DETAILS

**Granite Run Apartment 02**

MIDDLETOWN TOWNSHIP, PA

SCALE:
DATE: 12/20/22

**A5.09**

©2022, The Martin Architectural Group, P.C.

Printed: 1/13/2023 4:51:06 PM

UL Product iQ®

# BXUV.P522 - Fire-resistance Ratings - ANSI/UL 263

*Design/System/Construction/Assembly Usage Disclaimer*

- Authorities Having Jurisdiction should be consulted in all cases as to the particular requirements covering the installation and use of UL Certified products, equipment, system, devices, and materials.
- Authorities Having Jurisdiction should be consulted before construction.
- Fire resistance assemblies and products are developed by the design submitter and have been investigated by UL for compliance with applicable requirements. The published information cannot always address every construction nuance encountered in the field.
- When field issues arise, it is recommended the first contact for assistance be the technical service staff provided by the product manufacturer noted for the design. Users of fire resistance assemblies are advised to consult the general Guide Information for each product category and each group of assemblies. The Guide Information includes specifics concerning alternate materials and alternate methods of construction.
- Only products which bear UL's Mark are considered Certified.

## Fire-resistance Ratings - ANSI/UL 263

**BXUV - Fire Resistance Ratings - ANSI/UL 263 Certified for United States**

**BXUV7 - Fire Resistance Ratings - CAN/ULC-S101 Certified for Canada**

See General Information for Fire-resistance Ratings - ANSI/UL 263 Certified for United States
Design Criteria and Allowable Variances

See General Information for Fire Resistance Ratings - CAN/ULC-S101 Certified for Canada
Design Criteria and Allowable Variances

June 9, 2022

## Design No. P522

**Unrestrained Assembly Rating — 1 Hr**
**Finish Rating — 25 Min (See Items 3 or 3A )**
**This design was evaluated using a load design method other than the Limit States Design Method (e.g., Working Stress Design Method). For jurisdictions employing the Limit States Design Method, such as Canada, a load restriction factor shall be used — See Guide BXUV or BXUV7**

*** Indicates such products shall bear the UL or cUL Certification Mark for jurisdictions employing the UL or cUL Certification (such as Canada), respectively.**

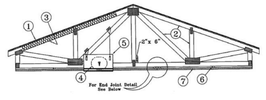


5E. **Alternate Ceiling Damper*** — Max room area shall be 144 sq in. with the length not to exceed 14 in. and the width not to exceed 12 in. Max height of damper shall be 17-7/8 in. Aggregate damper openings shall not exceed 74 sq in. per 100 sq ft of ceiling area. Damper installed in accordance with the manufacturers installation instructions provided with the damper. A steel grille shall be installed in accordance with installation instructions.
**C&S AIR PRODUCTS** — Model RD-521-9E, RD-521-NP90

**PUTTORFF** — Models CFD-521-SD, CFD-521-90NP

5F. **Alternate Ceiling Damper*** — Ceiling damper & fan assembly. Max room area shall be 131 sq in. with the length not to exceed 11-1/16 in. and the width not to exceed 11-7/8 in. Aggregate damper openings shall not exceed 66 sq in. per 100 sq ft of ceiling area. Damper shall be installed in combination with one of the fan models described in, and in accordance with, the manufacturer's installation instructions provided with the damper. A plastic grille shall be installed in accordance with installation instructions.
**DELTA ELECTRONICS INC** — Model SMT-CFD

5G. **Alternate Ceiling Damper*** — Ceiling damper & fan assembly. Max room area shall be 103 sq in. with the length not to exceed 10-1/8 in. and the width not to exceed 10-1/8 in. Aggregate damper openings shall not exceed 52 sq in. per 100 sq ft of ceiling area. Damper shall be installed in combination with one of the fan models described in, and in accordance with, the manufacturer's installation instructions provided with the damper. A plastic grille shall be installed in accordance with installation instructions.
**PANASONIC CORPORATION, PANASONIC CORPORATION OF NORTH AMERICA** — Model PC-RD05CS

5H. **Alternate Ceiling Damper*** — Ceiling damper & fan assembly. Max room area shall be 113 sq in. with the length not to exceed 10-1/8 in. and the width not to exceed 11-1/8 in. Aggregate damper openings shall not exceed 57 sq in. per 100 sq ft of ceiling area. Damper shall be installed in combination with one of the fan models described in, and in accordance with, the manufacturer's installation instructions provided with the damper. A plastic grille shall be installed in accordance with installation instructions.
**BROAN-NUTONE L L C** — Model RDFANT2

5I. **Alternate Ceiling Damper*** — Ceiling damper & fan. Max room area shall be 79 sq in. with the length not to exceed 10 in. and the width not to exceed 7-15/16 in. Aggregate damper openings shall not exceed 40 sq in. per 100 sq ft of ceiling area. Damper shall be installed in combination with one of the fan models described in, and in accordance with, the manufacturer's installation instructions provided with the damper. A metallic grille shall be installed in accordance with installation instructions.
**BROAN-NUTONE L L C** — Models 1001 and 1004

5J. **Alternate Ceiling Damper*** — Ceiling damper & fan assembly. Max room area shall be 87 sq in. with the length not to exceed 9 in. and the width not to exceed 9-11/16 in. Aggregate damper openings shall not exceed 44 sq in. per 100 sq ft of ceiling area. Damper shall be installed in combination with one of the fan models described in, and in accordance with, the manufacturer's installation instructions provided with the damper. A plastic grille shall be installed in accordance with installation instructions.
**BROAN-NUTONE L L C** — Models 1002, 1003 and 1005

5K. **Alternate Ceiling Damper*** — Ceiling damper & fan assembly. Max room area shall be 87 sq in. with the length not to exceed 9 in. and the width not to exceed 9-11/16 in. Aggregate damper openings shall not exceed 44 sq in. per 100 sq ft of ceiling area. Damper shall be installed in combination with one of the fan models described in, and in accordance with, the manufacturer's installation instructions provided with the damper. A plastic grille shall be installed in accordance with installation instructions.
**BROAN-NUTONE L L C** — Model FLTRXBQ

6. **Furring Channels** — Resilient channels formed of 25 MSG thick galv steel. Installed perpendicular to the trusses (Item 2), spaced a max of 16 in. OC when no insulation (Item 3 or 3A) is fitted in the concealed spaced, or a max of 12 in. OC when insulation (Item 3 or 3A) is fitted in the concealed space, draped over the resilient channel/gypsum board ceiling membrane, or when insulation (Item 3B, 3D or 3E) is applied to the underside of the roofing system (Item 1). Two courses of resilient channel positioned 6 in. OC at wallboard butt joints (3 in. from each end of wallboard). Channels oriented opposite at wallboard butt joints. Channel splices overlapped 4 in. beneath wood trusses. Channel splices overlapped 6 in. at wallboard butt joints (3 in. from each end of wallboard). Channels oriented opposite at wallboard butt joints. Channel splices overlapped 4 in. beneath wood trusses. Channels secured to each truss with 1-1/4 in. long Type S screws.

6A. **Steel Framing Members*** — (Not Shown) — As an alternate to Item 6, furring channels and Steel Framing Members as described below:
a. **Furring Channels** — Formed of No. 25 MSG galv steel, 2-9/16 in. or 2-23/32 in. wide by 7/8 in. deep, spaced 16 in. OC perpendicular to trusses when no insulation (Item 3 or 3A) is fitted in the concealed space, or 12 in. OC when insulation (Item 3 or 3A) is fitted in the concealed space, draped over the furring channels/gypsum board ceiling membrane or 24 in. OC when insulation (Items 3 or 3A) is fitted in the concealed space. Furring channels formed of a single length of furring channel/gypsum board ceiling membrane and a second layer of gypsum board is attached as described in Item 7 for steel framing members. Channels secured to trusses as described in Item 6Ab. Ends of adjoining channels overlapped 6 in. and tied together with double strand of No. 16 SWG galv steel wire near each end of overlap.

b. **Steel Framing Members** — Used to attach furring channels (Item a) to trusses (Item 2). Clips spaced 48 in. OC. RSIC-1 and RSIC-1 (2.75) clips secured to alternating trusses with No. 8 by 2-1/2 in. coarse drywall screw through the center grommet. RSIC-V and RSIC-V (2.75) clips secured to alternating trusses with No. 8 by 1-1/2 in. coarse drywall screw through the center hole. Furring channels are fitted into clips. RSIC-1 and RSIC-V clips for use with 2-23/32 in. wide furring channels. Adjoining channels are overlapped 6 in. and secured together with two self-tapping No. 6 framing screws, min. 7/16 in. long at the midpoint of the overlap, with one screw on each flange of the channel. Additional clips required to hold furring channel that supports the gypsum board butt joints, as described in Item 7.
**PAC INTERNATIONAL L L C** — Types RSC-1, RSC-V, RSIC-1 (2.75), RSIC-V (2.75).

6B. **Steel Framing Members*** — (Not Shown) — As an alternate to Item 6 and 6A:
a. **Furring Channels** — Hat-shaped furring channels, 7/8 in. deep by 2-5/8 in. wide at the base and 1-1/4 in. wide at the face, formed from No. 25 ga. galv steel, spaced max 16 in. OC perpendicular to trusses and Cold Rolled Channels (Item 6Bb). Furring channels secured to Cold Rolled Channels at every intersection with a 1/2 in. pan head self-drilling screw through each furring channel leg. Ends of adjoining channels overlapped 4 in. and tied together with two double strand No. 18 SWG galv steel wire ties, one at each end of overlap. Supplemental furring channels at base layer and outer layer gypsum board butt joints are not required. Batts and Blankets draped over furring channels as described in Item 3. Two layers of gypsum board attached to furring channels as described in Item 7.

b. **Cold Rolled Channels** — 1-1/2 in. by 1/2 in., formed from No. 16 ga. galv steel, positioned vertically and parallel to trusses, friction-fitted into the channel caddy on the Steel Framing Members (Item 6Bd). Adjoining lengths of cold rolled channels lapped min. 6 in. and wire-tied together with two double strand 18 SWG galv steel wire ties, one at each end of overlap.

c. **Blocking —** Where truss design does not permit direct, full contact of the hanger bracket, a piece of nominal 2 by 4 in. lumber (blocking), min. 6 in. long to permit full contact of the hanger bracket, to be secured vertically to the side of the truss (Item 2) at the top and bottom of the blocking at each Steel Framing Member (Item 6Bd) location.

8. **Finishing System —** (Not Shown) — Vinyl, dry or premixed joint compound, applied in two coats to joints and screw-heads; paper tape, 2 in. wide, embedded in first layer of compound over all joints. As an alternate, nom 3/32 in. thick veneer plaster may be applied to the entire surface of gypsum board. **Alternate Ceiling Membrane** — Not Shown.

9. **Netting —** Fibrous, woven netting material fastened to underside of each joint with staples, with side joints overlapped.

*** Indicates such products shall bear the UL or cUL Certification Mark for jurisdictions employing the UL or cUL Certification (such as Canada), respectively.**

Last Updated on 2022-06-09

The appearance of a company's name or product in this database does not in itself assure that products so identified have been manufactured under UL Solutions' Follow - Up Service. Only those products bearing the UL Mark should be considered to be Certified and covered under UL Solutions' Follow - Up Service. Always look for the Mark on the product.

UL Solutions permits the reproduction of the material contained in Product iQ subject to the following conditions: 1. The Guide Information, Assemblies, Constructions, Designs, Systems, and/or Certifications (files) must be presented in their entirety and in a non-misleading manner, without any manipulation of the data (or drawings). 2. The statement "Reprinted from Product iQ with permission from UL Solutions" must appear adjacent to the extracted material. In addition, the reprinted material must include a copyright notice in the following format: "©2022 UL LLC."

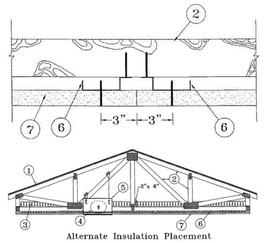


Alternate Insulation Placement

1. **Roofing System* —** Any UL Class A, B or C Roofing System (TGFU) or Prepared Roof Covering (TFWZ) acceptable for use over nom 15/32 in. thick wood structural panels, min. grade "C-D" or "Sheathing". Nom 15/32 in. thick wood structural panels secured to trusses with No. 6d ringed shank nails spaced 12 in. OC along each truss. Staples having equal or greater withdrawal and lateral resistance strength may be substituted for the 6d nails. Construction adhesive may be used with either the nails or staples.

2. **Trusses —** Pitched or parallel chord wood trusses, spaced a max of 24 in. OC, fabricated from nom 2 by 4 lumber, with lumber oriented vertically or horizontally. Truss members secured together with min. G1016 in. thick galv steel plates. Plates have 5/16 in. long teeth projecting perpendicular to the plane of the plate. The teeth are in pairs facing each other (made by the same punch), forming a split tooth type plate. Each tooth has a chisel point on its outside edge. These points are diagonally opposite each other for each pair. The top half of each tooth has a twist for stiffness. The pairs are repeated on approximately 7/8 in. centers with four rows of teeth per inch of plate width. Minimum parallel chord truss depth shall be 18 in. Where pitched truss intersects with the interior face of the exterior walls, the min truss depth shall be 5-1/4 in. with a min roof slope of 3/12 and a min. average depth of 18 in.. Where the truss intersects with the interior face of the exterior walls, the min truss depth may be reduced to 3 in. If the batts and blankets ( Item 3) are used as shown in the above illustration (Alternate Insulation Placement) and are firmly packed against the intersection of the bottom chords and the plywood sheathing.

3. **Batts and Blankets* —** (Optional) — Required when Item 6B is used — Glass fiber insulation, secured to the wood structural panels with staples spaced 12 in. OC or to the trusses with 0.090 in. diam galv steel wires spaced 12 in. OC. Any glass fiber insulation bearing the UL Classification Marking as to Surface Burning Characteristics and/or Fire Resistance, having a min density of 0.5 pcf. As an option, the insulation may be fitted in the concealed space, draped over the resilient channel/gypsum board ceiling membrane when resilient channels and gypsum board attachment is modified as specified in Items 6 and 7. When **Steel Framing Members** (Item 6B) are used, max 3-1/2 in. thick insulation shall be draped over the furring channels (Item 6Ba) and gypsum board ceiling membrane, and friction-fitted between trusses and Steel Framing Members (Item 6Bd). The finished rating has only been determined when the insulation is secured to the decking.

3A. **Fiber, Sprayed* —** As an alternate to Item 3 (not evaluated for use with Item 6B) — Any thickness of spray-applied cellulose insulation material, having a min density of 0.5 lb/ft$^3$, applied with water, over the resilient channel/gypsum board ceiling membrane when resilient channels and gypsum board attachment is modified as specified in Items 6 and 7. Fiber, Sprayed is applied with moisture in accordance with the application instructions supplied with the product. The finish rating when Fiber Sprayed is used has not been determined. Alternate application method: The fiber is applied without water or adhesive in accordance with the application instructions supplied with a minimum density of 0.5 lb/ft$^3$ over the resilient channel/gypsum board ceiling membrane when resilient channels and gypsum board attachment is modified as specified in Items 6 and 7. Alternate application method: The fiber is applied without water or adhesive to a nominal density of 3.5 lbs/ft$^3$ behind netting (Item 9) stapled to the rafters. The netting is stapled at both lower edges of the rafters creating a cavity to accept the cellulose fiber.
U **GREENFIBER L L C** — *INS715, INS745, INS750,0, and SANCTUARY for use with wet or dry application. INS510,0, INS515,0, INS541,0, INS735, INS765,0, and INS775,0 are to be used for dry application only.*

3B. **Foamed Plastic* —** (As an alternate to Item 3 or 3A, Not Shown) — Spray foam insulation applied directly to the underside of the underside of the roofing system (Item 1). Spray foam insulation installed to a maximum thickness of 10 in. at a nominal 0.5 lb/ft$^3$ density, while maintaining a minimum 8-1/2 in. clearance between the spray foam insulation and the gypsum board (Item 7). When spray foam insulation is used, resilient channels (Item 6) shall be installed maximum 12 in. OC, with channels adjacent to butt joints of gypsum board (Item 7) installed at 6 in. OC to allow for maximum 3 in. spacing off ends of the gypsum board joints. Gypsum board (Item 7) to be installed using 1-1/4 in. long Type S screws, spaced maximum 8 in. OC, and butted end joints shall be staggered min. 2 ft within the assembly, and occur midway between the continuous furring channels. If used with a fire damper (Items 5 through 5K) in the concealed space, minimum 1 in. clearance to be maintained between damper housing and spray foam insulation. Not evaluated for use with Items 6A through 6F.
**SES FOAM INC** — Sureseal

3C. **Cavity Insulation - Batts and Blankets* or Fiber, Sprayed* —** (As described above) in Items 3 and 3A — (For Use with Item 7B, Not Shown) — Min. 3-1/2 in thick with no limit on maximum thickness fitted in the concealed space, draped over the resilient channel Item 6Gj)/gypsum board (Item 7B) ceiling membrane.

3D. **Foamed Plastic* —** (As alternate to Item 3, 3A, or 3B, Not Shown) — Spray foam insulation applied directly to the underside of the roofing system (Item 1). Spray foam insulation installed to a maximum thickness of 10 in. at a nominal 0.5 lb/ft$^3$ or 2.0 lb/ft$^3$ density, depending on the product installed. When spray foam insulation is installed, resilient channels (Item 6) shall be installed maximum 12 in. OC, with channels adjacent to butt joints of gypsum board (Item 7) spaced maximum 3 in. away from gypsum butt joints. Gypsum board (Item 7) to be installed using minimum 1-1/4 in. long Type S screws, spaced maximum 8 in. OC, and butted end joints shall be staggered min. 2 ft within the assembly, and occur midway between the continuous furring channels. If used with a fire damper (Items 5 through 5K) in the concealed space, minimum 1 in. clearance to be maintained between damper housing and spray foam insulation. Not evaluated for use with Items 6A through 6F.
**BASF CORP** — Enertite® NM, Enertite® G, FE178®, Spraytite® 178, Spraytite® 81206, Walltite® 200, Walltite® US, Walltite® US-N, and Walltite® HP+

3E. **Foamed Plastic* —** (As an alternate to Item 3, 3A, 3B, 3C, or 3G, Not Shown) — Spray foam insulation applied directly to the underside of the underside of the roofing system (Item 1). Spray foam insulation installed to a maximum thickness of 17 in. at a nominal 0.5 lb/ft$^3$ density, while maintaining a minimum 1-1/2 in. clearance between the spray foam insulation and the gypsum board (Item 7). When spray foam insulation is used, resilient channels (Item 6) shall be installed maximum 12 in. OC with channels adjacent to butt joints of gypsum board (Item 7) installed at 6 in. OC to allow for maximum 3 in. spacing off ends of the gypsum board joints. Gypsum board (Item 7) to be installed using 1-1/4 in. long Type S screws, spaced maximum 8 in. OC, and butted end joints shall be staggered min. 2 ft within the assembly, and occur midway between the continuous furring channels. If used with a fire damper (Items 5 through 5K) in the concealed space, no clearance is necessary between damper housing and spray foam insulation. Not evaluated for use with Items 6A through 6F.
**SES FOAM INC** — EasySeal 5

3F. **Foamed Plastic* —** (As alternate to Item 3 - not to be used in combination with any alternates to Item 3) — Spray foam insulation applied directly to the underside of the roofing system (Item 1). Spray foam insulation installed to a maximum thickness of 11 in. at a nominal 1.0 lb/ft$^3$ - 2.5 lb/ft$^3$ density, while maintaining a minimum 7 in. clearance between the spray foam insulation and the gypsum board (Item 7). When spray foam insulation is installed, resilient channels (Item 6) shall be installed maximum 12 in. OC, with channels adjacent to butt joints of gypsum board spaced maximum 3 in. away from gypsum butt joints. Gypsum board to be installed using minimum 1-1/4 in. long Type S screws, spaced maximum 8 in. OC, and butted end joints shall be staggered min. 2 ft within the assembly, and occur midway between the continuous furring channels. If used with a fire damper (Items 5 through 5K) in the concealed space, no clearance is necessary between damper housing and spray foam insulation. Only for use with Item 6 not evaluated for use with alternates to Item 6.
**CARLISLE SPRAY FOAM INSULATION** — Types SealTite Pro Closed Cell (CC), SealTite Pro Open Cell (OC), SealTite Pro OCX, SealTite Pro Xtra Zero, Foamulate Closed Cell, Foamulate OCX, Foamulate 70, and Foamulate HFO.

4. **Air Duct* —** For use with **Ceiling Dampers*** - Any UL Class 0 or Class 1 flexible air duct installed in accordance with the instructions provided by the damper manufacturer.

5. **Ceiling Damper* —** Max nom area, 324 sq in. Max square size, 18 by 18 in. rectangular sizes not to exceed 324 sq in. with a max width of 18 in. Max damper height is 14 in. Installed in accordance with manufacturers installation instructions provided with the damper. Max damper openings not to exceed 162 sq in. per 100 sq ft of ceiling area.
**C&S AIR PRODUCTS** — Model RD-521

**PUTTORFF** — Model CFD-521

5A. **Alternate Ceiling Damper* —** Max nom area, 196 sq in. Max square size, 14 in. by 14 in. Rectangular sizes not to exceed 196 sq in. with a max width of 26 in. Max overall damper height is 7 in. Installed in accordance with the manufacturers installation instructions provided with the damper. Max damper openings not to exceed 98 sq in. per 100 sq ft of ceiling area.
**C&S AIR PRODUCTS** — Model RD-521-8F

**PUTTORFF** — Model CFD-521-8T.

5B. **Alternate Ceiling Damper* —** Max nom area shall be 256 sq in. with the length not to exceed 24 in. and the width not to exceed 20 in. Max height of damper shall be 17 in. Aggregate damper openings shall not exceed 128 sq in. per 100 sq ft of ceiling area. Damper installed in accordance with the manufacturers installation instructions provided with the damper. A steel grille shall be installed in accordance with installation instructions.
**C&S AIR PRODUCTS** — Model RD-521-1P, RD-521-NP

**PUTTORFF** — Models CFD-521-1P, CFD-521-NP

5C. **Alternate Ceiling Damper* —** Ceiling damper & fan assembly. Max nom area shall be 75 sq in. with the length not to exceed 9-1/4 in. and the width not to exceed 8-3/4 in. Max height of damper shall be 9-7/8 in. Aggregate damper openings shall not exceed 38 sq in. per 100 sq ft of ceiling area. Damper shall be installed in combination with one of the fan models described in, and in accordance with, the manufacturers installation instructions provided with the damper. A plastic grille shall be installed in accordance with installation instructions.
**DELTA ELECTRONICS INC** — Models CNSQ, GER-CFD, ITG-CFD

5D. **Alternate Ceiling Damper* —** Ceiling damper & fan. Max nom area shall be 75 sq in. with the length not to exceed 9-1/4 in. and the width not to exceed 9-3/4 in. Aggregate damper openings shall not exceed 45 sq in. per 100 sq ft of ceiling area. Damper shall be installed in combination with one of the fan models described in, and in accordance with, the manufacturer's installation instructions provided with the damper. A plastic grille shall be installed in accordance with installation instructions.
**DELTA ELECTRONICS INC** — Model SIG-CFD

3B. **Foamed Plastic* —** (As an alternate to Item 3 or 3A, Not Shown) — Spray foam insulation applied directly to the underside of the underside of the roofing system (Item 1). Spray foam insulation installed to a maximum thickness of 10 in. at a nominal 0.5 lb/ft$^3$ density, while maintaining a minimum 8-1/2 in. clearance between the spray foam insulation and the gypsum board (Item 7). When spray foam insulation is used, resilient channels (Item 6) shall be installed maximum 12 in. OC, with channels adjacent to butt joints of gypsum board (Item 7) installed at 6 in. OC to allow for maximum 3 in. spacing off ends of the gypsum board joints. Gypsum board (Item 7) to be installed using 1-1/4 in. long Type S screws, spaced maximum 8 in. OC, and butted end joints shall be staggered min. 2 ft within the assembly, and occur midway between the continuous furring channels. If used with a fire damper (Items 5 through 5K) in the concealed space, minimum 1 in. clearance to be maintained between damper housing and spray foam insulation. Not evaluated for use with Items 6A through 6F.
**SES FOAM INC** — Sureseal

3C. **Cavity Insulation - Batts and Blankets* or Fiber, Sprayed* —** (As described above) in Items 3 and 3A — (For Use with Item 7B, Not Shown) — Min. 3-1/2 in thick with no limit on maximum thickness fitted in the concealed space, draped over the resilient channel Item 6Gj)/gypsum board (Item 7B) ceiling membrane.

3D. **Foamed Plastic* —** (As alternate to Item 3, 3A, or 3B, Not Shown) — Spray foam insulation applied directly to the underside of the roofing system (Item 1). Spray foam insulation installed to a maximum thickness of 10 in. at a nominal 0.5 lb/ft$^3$ or 2.0 lb/ft$^3$ density, depending on the product installed. When spray foam insulation is installed, resilient channels (Item 6) shall be installed maximum 12 in. OC, with channels adjacent to butt joints of gypsum board (Item 7) spaced maximum 3 in. away from gypsum butt joints. Gypsum board to be installed using minimum 1-1/4 in. long Type S screws, spaced maximum 8 in. OC, and butted end joints shall be staggered min. 2 ft within the assembly, and occur midway between the continuous furring channels. If used with a fire damper (Items 5 through 5K) in the concealed space, minimum 1 in. clearance to be maintained between damper housing and spray foam insulation. Not evaluated for use with Items 6A through 6F.
**BASF CORP** — Enertite® NM, Enertite® G, FE178®, Spraytite® 178, Spraytite® 81206, Walltite® 200, Walltite® US, Walltite® US-N, and Walltite® HP+

3E. **Foamed Plastic* —** (As an alternate to Item 3, 3A, 3B, 3C, or 3G, Not Shown) — Spray foam insulation applied directly to the underside of the underside of the roofing system (Item 1). Spray foam insulation installed to a maximum thickness of 17 in. at a nominal 0.5 lb/ft$^3$ density, while maintaining a minimum 1-1/2 in. clearance between the spray foam insulation and the gypsum board (Item 7). When spray foam insulation is used, resilient channels (Item 6) shall be installed maximum 12 in. OC with channels adjacent to butt joints of gypsum board (Item 7) installed at 6 in. OC to allow for maximum 3 in. spacing off ends of the gypsum board joints. Gypsum board (Item 7) to be installed using 1-1/4 in. long Type S screws, spaced maximum 8 in. OC, and butted end joints shall be staggered min. 2 ft within the assembly, and occur midway between the continuous furring channels. If used with a fire damper (Items 5 through 5K) in the concealed space, no clearance is necessary between damper housing and spray foam insulation. Not evaluated for use with Items 6A through 6F.
**SES FOAM INC** — EasySeal 5

3F. **Foamed Plastic* —** (As alternate to Item 3 - not to be used in combination with any alternates to Item 3) — Spray foam insulation applied directly to the underside of the roofing system (Item 1). Spray foam insulation installed to a maximum thickness of 11 in. at a nominal 1.0 lb/ft$^3$ - 2.5 lb/ft$^3$ density, while maintaining a minimum 7 in. clearance between the spray foam insulation and the gypsum board (Item 7). When spray foam insulation is installed, resilient channels (Item 6) shall be installed maximum 12 in. OC, with channels adjacent to butt joints of gypsum board spaced maximum 3 in. away from gypsum butt joints. Gypsum board to be installed using minimum 1-1/4 in. long Type S screws, spaced maximum 8 in. OC, and butted end joints shall be staggered min. 2 ft within the assembly, and occur midway between the continuous furring channels. If used with a fire damper (Items 5 through 5K) in the concealed space, no clearance is necessary between damper housing and spray foam insulation. Only for use with Item 6 not evaluated for use with alternates to Item 6.
**CARLISLE SPRAY FOAM INSULATION** — Types SealTite Pro Closed Cell (CC), SealTite Pro Open Cell (OC), SealTite Pro OCX, SealTite Pro Xtra Zero, Foamulate Closed Cell, Foamulate OCX, Foamulate 70, and Foamulate HFO.

4. **Air Duct* —** For use with **Ceiling Dampers*** - Any UL Class 0 or Class 1 flexible air duct installed in accordance with the instructions provided by the damper manufacturer.

5. **Ceiling Damper* —** Max nom area, 324 sq in. Max square size, 18 by 18 in. rectangular sizes not to exceed 324 sq in. with a max width of 18 in. Max damper height is 14 in. Installed in accordance with manufacturers installation instructions provided with the damper. Max damper openings not to exceed 162 sq in. per 100 sq ft of ceiling area.
**C&S AIR PRODUCTS** — Model RD-521

**PUTTORFF** — Model CFD-521

5A. **Alternate Ceiling Damper* —** Max nom area, 196 sq in. Max square size, 14 in. by 14 in. Rectangular sizes not to exceed 196 sq in. with a max width of 26 in. Max overall damper height is 7 in. Installed in accordance with the manufacturers installation instructions provided with the damper. Max damper openings not to exceed 98 sq in. per 100 sq ft of ceiling area.
**C&S AIR PRODUCTS** — Model RD-521-8F

**PUTTORFF** — Model CFD-521-8T.

5B. **Alternate Ceiling Damper* —** Max nom area shall be 256 sq in. with the length not to exceed 24 in. and the width not to exceed 20 in. Max height of damper shall be 17 in. Aggregate damper openings shall not exceed 128 sq in. per 100 sq ft of ceiling area. Damper installed in accordance with the manufacturers installation instructions provided with the damper. A steel grille shall be installed in accordance with installation instructions.
**C&S AIR PRODUCTS** — Model RD-521-1P, RD-521-NP

**PUTTORFF** — Models CFD-521-1P, CFD-521-NP

5C. **Alternate Ceiling Damper* —** Ceiling damper & fan assembly. Max nom area shall be 75 sq in. with the length not to exceed 9-1/4 in. and the width not to exceed 8-3/4 in. Max height of damper shall be 9-7/8 in. Aggregate damper openings shall not exceed 38 sq in. per 100 sq ft of ceiling area. Damper shall be installed in combination with one of the fan models described in, and in accordance with, the manufacturers installation instructions provided with the damper. A plastic grille shall be installed in accordance with installation instructions.
**DELTA ELECTRONICS INC** — Models CNSQ, GER-CFD, ITG-CFD

5D. **Alternate Ceiling Damper* —** Ceiling damper & fan. Max nom area shall be 75 sq in. with the length not to exceed 9-1/4 in. and the width not to exceed 9-3/4 in. Aggregate damper openings shall not exceed 45 sq in. per 100 sq ft of ceiling area. Damper shall be installed in combination with one of the fan models described in, and in accordance with, the manufacturer's installation instructions provided with the damper. A plastic grille shall be installed in accordance with installation instructions.
**DELTA ELECTRONICS INC** — Model SIG-CFD

ALL REPORTS, PLANS, SPECIFICATIONS AND COMPUTER FILES RELATING TO THIS PROJECT ARE THE PROPERTY OF THE MARTIN ARCHITECTURAL GROUP. THE MARTIN ARCHITECTURAL GROUP RETAINS ALL COMMON LAW, STATUTE AND OTHER RESERVED RIGHTS INCLUDING THE COPYRIGHT THERETO. REPRODUCTION OF THE MATERIAL HEREIN OR SUBSTANTIAL USE WITHOUT WRITTEN PERMISSION OF THE MARTIN ARCHITECTURAL GROUP VIOLATES THE COPYRIGHT LAWS OF THE UNITED STATES AND WILL BE SUBJECT TO LEGAL PROSECUTION.
©2022, The Martin Architectural Group, P.C.

NTS

REGISTERED ARCHITECT PENNSYLVANIA ROMANIC No. 040078 JASON DECAMPLI

I hereby prepare these plans

Professional License Expiration

THE MARTIN ARCHITECTURAL GROUP, P.C.
ARCHITECTS AND LAND PLANNERS
A PROFESSIONAL CORPORATION
240 NORTH 22ND STREET, PHILADELPHIA, PA, 19103
P (215) 665-1600 F (215) 561-5064

| | |
|---|---|
| P.A.: | DREW ROMANIC |
| P.M.: | JASON DECAMPLI |
| DRAWN BY: | MAG |
| PROJECT NO: | 1362-12 |

| NO. | REVISION | DATE |
|---|---|---|
| 1 | PERMIT SET | 12.20.22. |

# FIRE RATED ASSEMBLIES
## Granite Run Apartment 02
MIDDLETOWN TOWNSHIP, PA

| | |
|---|---|
| SCALE: | AS NOTED |
| DATE: | 12/31/2017 |

# A5.10

©2022, The Martin Architectural Group, P.C.

Printed: 1/13/2023 4:51:16 PM

UL Product iQ®

# BXUV.U356 - Fire-resistance Ratings - ANSI/UL 263

*Design/System/Construction/Assembly Usage Disclaimer*

- Authorities Having Jurisdiction should be consulted in all cases as to the particular requirements covering the installation and use of UL Certified products, equipment, system, devices, and materials.
- Authorities Having Jurisdiction should be consulted before construction.
- Fire resistance assemblies and products are developed by the design submitter and have been investigated by UL for compliance with applicable requirements. The published information cannot always address every construction nuance encountered in the field.
- When field issues arise, it is recommended the first contact for assistance be the technical service staff provided by the product manufacturer noted for the design. Users of fire resistance assemblies are advised to consult the general Guide Information for each product category and each group of assemblies. The Guide Information includes specifics concerning alternate materials and alternate methods of construction.
- Only products which bear UL's Mark are considered Certified.

## Fire-resistance Ratings - ANSI/UL 263

BXUV - Fire Resistance Ratings - ANSI/UL 263 Certified for United States
BXUV7 - Fire Resistance Ratings - CAN/ULC-S101 Certified for Canada

See General Information for Fire-resistance Ratings - ANSI/UL 263 Certified for United States
Design Criteria and Allowable Variances

See General Information for Fire Resistance Ratings - CAN/ULC-S101 Certified for Canada
Design Criteria and Allowable Variances

## Design No. U356

May 25, 2022

**Bearing Wall Rating - 1 Hr Rating Exposed to Fire on Interior Face Only**
**Bearing Wall Rating — 1 Hr Rating Exposed to Fire on Exterior Face (See Item 6E)**
**Finish Rating — 23 Min or 25 Min (See Item 2C)**
**This design was evaluated using a load design method other than the Limit States Design Method (e.g., Working Stress Design Method). For jurisdictions employing the Limit States Design Method, such as Canada, a load restriction factor shall be used — See Guide BXUV or BXUV7**

*** Indicates such products shall bear the UL or cUL Certification Mark for jurisdictions employing the UL or cUL Certification (such as Canada), respectively.**

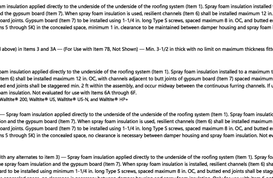


1. **Wood Studs —** Nom 2 by 4 in. spaced 16 in. OC with two 2 by 4 in. top and one 2 by 4 in. bottom plates. Studs laterally-braced by wood structural panel sheathing (Item 5). When **Mineral and Fiber Boards*** (Item 5A) are considered as bracing for the studs, the load is restricted to 76% of allowable axial load. Walls effectively fire stopped at top and bottom of wall.

2. **Gypsum Board* — Any 5/8 in. thick UL Classified Gypsum Board that is eligible for use in Design Nos. U501, U512 or U305.** Nom 5/8 in. thick, 4 ft wide, applied vertically and nailed to studs and bearing plates 7 in. OC with 6d cement-coated nails, 1-7/8 in. long with 1/4 in. diam head.
When Item **Steel Framing Members*** (Item 7 or any alternate clips), is used, gypsum panels attached to furring channels with 1 in. long Type S bugle-head steel screws spaced 12 in. OC.
When Item 7A **Steel Framing Members***, is used, two layers of gypsum panels attached to furring channels with 1 in. long Type S bugle-head steel screws spaced 12 in. OC. Face layer attached to furring channels with 1-5/8 in. long Type S bugle-head steel screws spaced 12 in. OC. All joints in face layers staggered with joints in base layers.

Printed: 1/13/2023 4:51:16 PM

**AMERICAN GYPSUM CO** (View Classification) — CKNX.114196

**BEIJING NEW BUILDING MATERIALS PUBLIC LTD CO** (View Classification) — CKNX.119374

**CABOT MANUFACTURING ULC** (View Classification) — CKNX.125370

**CERTAINTEED GYPSUM INC** (View Classification) — CKNX.130660

**CGC INC** (View Classification) — CKNX.119751

**CERTAINTEED GYPSUM INC** (View Classification) — CKNX.118482

**GEORGIA-PACIFIC GYPSUM L L C** (View Classification) — CKNX.112717

**LOADMASTER SYSTEMS INC** (View Classification) — CKNX.117809

**NATIONAL GYPSUM CO** (View Classification) — CKNX.131501

**PABCO BUILDING PRODUCTS L L C, DBA PABCO GYPSUM** (View Classification) — CKNX.117094

**PANEL REY S A** (View Classification) — CKNX.121796

**SIAM GYPSUM INDUSTRY (SARABURI) CO LTD** (View Classification) — CKNX.119262

**THAI GYPSUM PRODUCTS PCL** (View Classification) — CKNX.127517

**UNITED STATES GYPSUM CO** (View Classification) — CKNX.11319

**USG BORAL DRYWALL SFZ LLC** (View Classification) — CKNX.131448

**USG MEXICO S A DE C V** (View Classification) — CKNX.116089

2A. **Gypsum Board* —** (As an alternate to Item 2, Not Shown) — Any 5/8 in. thick 4 ft wide gypsum panels that are eligible for use in Design Nos. U501, U512 or U305, supplied by the Classified Companies listed below shown in the **Gypsum Board*** (CKNX) category. Applied vertically and attached to studs and bearing plates with 1-1/4 in. long Type W coarse thread gypsum panel steel screws spaced a max 8 in. OC, with last screw 1 in. from edge of board.
**USG INC**
**UNITED STATES GYPSUM CO**
**USG BORAL DRYWALL SFZ LLC**
**USG MEXICO S A DE C V**

2B. **Gypsum Board* —** (As an alternate to Item 2, Not Shown) — 5/8 in. thick 4 ft wide gypsum panels applied vertically and attached to studs and bearing plates with 1-1/4 in. long Type W coarse thread gypsum panel steel screws spaced a max 8 in. OC, with last screw 1 in. from edge of board.
**AMERICAN GYPSUM CO** — Types AGX-

b. **Steel Framing Members* —** Used to attach furring channels (Item 7A) to studs. Clips spaced 48 in. OC., and secured to studs with No. 8 x 2-1/2 in. coarse drywall screw through the center grommet. Furring channels are friction fitted into clips. RSIC-1 clip for use with 2-9/16 in. wide furring channels. RSIC-1 (2.75) clip for use with 3-2/5/32 in. wide furring channels.
**PAC INTERNATIONAL L L C** — Types RSIC-1, RSIC-1 (2.75).

7A. **Steel Framing Members* —** (Optional, Not Shown, As an alternate to Item 7) — Furring channels and Steel Framing Members as described below:
a. **Furring Channels —** Formed of No. 25 MSG galv steel, spaced 24 in. OC perpendicular to studs. Channels secured to studs as described in Item b. Ends of adjoining channels are overlapped 6 in. and tied together with double strand of No. 18 SWG galv steel wire near each end of overlap. Two layers of gypsum board attached to furring channels as described in Item 2.

b. **Steel Framing Members* —** Used to attach furring channels (Item 7Aa) to interior side of studs. Clips spaced 48 in. OC., and secured to studs with two No. 8 x 2-1/2 in. coarse drywall screws, one through the hole at each end of the clip. Furring channels are friction fitted into clips.
**KINETICS NOISE CONTROL INC** — Type Isomax.

7B. **Steel Framing Members* —** (Optional, Not Shown, As an alternate to Item 7) — Furring channels and Steel Framing Members as described below:
a. **Furring Channels —** Formed of No. 25 MSG galv steel. 2-3/8 in. wide by 7/8 in. deep, spaced 24 in. OC perpendicular to studs. Channels secured to studs as described in Item b. Ends of adjoining channels are overlapped 6 in. and tied together with double strand of No. 18 SWG galv steel wire near each end of overlap. As an alternate, ends of adjoining channels may be overlapped 6 in. and secured together with two self-tapping #6 framing screws, min. 7/16 in. long at the midpoint of the overlap, with one screw on each flange of the channel. Gypsum board attached to furring channels as described in Item 2.

b. **Steel Framing Members* —** Used to attach furring channels (Item a) to studs. Clips spaced 48 in. OC. Genie clips secured to studs with No. 8 x 1-1/2 in. coarse drywall screw through the center hole. Furring channels are friction fitted into clips.
**PLITEQ INC** — Type Genie Clip

7C. **Steel Framing Members* —** (Optional, Not Shown, As an alternate to Item 7) — Furring channels and Steel Framing Members as described below:
a. **Furring Channels —** Formed of No. 25 MSG galv steel. Spaced 24 in. OC perpendicular to studs. Channels secured to studs as described in Item b. Ends of adjoining channels overlapped 6 in. and tied together with double strand of No. 18 AWG galvanized steel wire.Gypsum board attached to furring channels as described in Item 2.

b. **Steel Framing Members* —** Used to attach furring channels (Item 7Ca) to studs. Clips spaced 48 in. OC., and secured to studs with 2 in. coarse drywall screw with 1 in. diam washer through the center hole. Furring channels are friction fitted into clips.
**STUDCO BUILDING SYSTEMS** — RESILMOUNT Sound Isolation Clips - Type A237R.

7D. **Steel Framing Members* —** (Optional, Not Shown, As an alternate to Item 7) — Furring channels and Steel Framing Members as described below:
a. **Furring Channels —** Formed of No. 25 MSG galv steel. Spaced 24 in. OC perpendicular to studs. Channels secured to studs as described in Item 7Db. Ends of adjoining channels overlapped 6 in. and tied together with double strand of No. 18 AWG galvanized steel wire. Gypsum board attached to furring channels as described in Item 2.

b. **Steel Framing Members* —** Used to attach furring channels (Item 7Da) to studs. Clips spaced 48 in. OC., and secured to studs with No. 8 x 2-1/2 in. coarse drywall screw through the center hole. Furring channels are friction fitted into clips.
**REGUPOL AMERICA** — Type SonusClip

7E. **Steel Framing Members* —** (Optional, Not Shown, As an alternate to Item 7) — Resilient channels and Steel Framing Members as described below:
a. **Resilient Channels —** Formed of No. 25 MSG galv steel, spaced 24 in. OC, and perpendicular to studs. Channels secured to studs as described in Item b. Ends of adjoining channels overlapped 6 in. and secured in place with two No. 8 15 x 1/2 in. Philips Modified Truss screws spaced 2-1/2 in. from the center of the overlap. Gypsum board attached to resilient channels as described in Item 2.

b. **Steel Framing Members* —** Used to attach resilient channels (Item 7Ea) to studs. Clips spaced 48 in. OC., and secured to studs with No. 8 x 2-1/2 in. coarse drywall screw through the center hole. Resilient channels are secured to clips with one No. 10 x 1/2 in. pan-head self-drilling screw.
**KEENE BUILDING PRODUCTS CO INC** — Type RC+ Assurance Clip

7F. **Steel Framing Members* —** (Optional, Not Shown, As an alternate to Item 7) — Furring channels and Steel Framing Members as described below:
a. **Furring Channels —** Formed of No. 25 MSG galv steel. 2-23/32 in. wide by 7/8 in. deep, spaced 24 in. OC perpendicular to studs. Channels secured to studs as described in Item b. Ends of adjoining channels are overlapped 6 in. and tied together with double strand of No. 18 SWG galv steel wire near each end of overlap. As an alternate, ends of adjoining channels may be overlapped 6 in. and secured together with two self-tapping #6 framing screws, min. 7/16 in. long at the midpoint of the overlap, with one screw on each flange of the channel. Gypsum board attached to furring channels as described in Item 2.

b. **Steel Framing Members* —** Used to attach furring channels (Item 7Fa) to studs. Clips spaced maximum 48 in. OC. Clips secured to studs with No. 8 x 2-1/2 in. coarse drywall screw through the center grommet. Furring channels are friction fitted into clips.
**CLARKDIETRICH BUILDING SYSTEMS** — Type ClarkDietrich Sound Clip

8. **Non-Bearing Wall Partition Intersection —** (Optional) — Two nominal 2 by 4 in. stud or nominal 2 by 6 in. stud nailed together with two 3in. long 10d nails spaced a max. 16 in. OC. vertically and fastened to one side of the minimum 2 by 4 in. stud with 3 in. long 10d nails spaced a max 16 in. OC. vertically. Intersection between partition wood studs to be flush with the 2 by 4 in. studs. The wall partition wood studs are to be framed by with a second 2 by 4 in. wood stud fastened with 3 in. long 10d nails spaced a max. 16 in. OC. vertically. Maximum one non-bearing wall partition intersection per stud cavity. Non-bearing wall partition stud depth shall be at a minimum equal to the depth of the bearing wall.

**LATICRETE SUPERCAP L L C** — Types LRK, HSLRK

**USG MEXICO S A DE C V** — Types LRK, HSLRK, CSD

**Floor Mat Materials*** — (Optional) — Floor mat material loose laid over the subfloor. Refer to manufacturer's instructions regarding the minimum thickness of floor topping over each floor mat material.
**UNITED STATES GYPSUM CO** — Types SAM, LEVELROCK® Brand Sound Reduction Board, LEVELROCK® Brand Floor Underlayment SRM-25

**Alternate Floor Mat Materials* —** (Optional) — Floor mat material loose laid over the subfloor. Refer to manufacturer's instructions regarding minimum thickness of floor topping over floor mat.
**GRASSWORX L L C** — SC Types

**System No. 3 (For Use with Item 7A Only)**

**Finish Floor —** Nom 23/32 in. thick wood structural panels installed perpendicular to trusses with end joints staggered. Plywood or panels secured to trusses with construction adhesive and 2-1/2 in. long nails, spaced 12 in. OC along each truss and 8 in. OC at the perimeter.

**System No. 4**

**Structural Cement-Fiber Units* —** Nom 3/4 in. thick, with long edges tongue and grooved. Long dimension of panels to be perpendicular to wood trusses with end joints staggered a min of 2 ft and centered over the trusses. Panels secured to wood trusses with 1-5/8 in. long, No. 8, self- countersinking wood screw spaced a max of 12 in. OC in the field with a screw located 1 in. and 2 in. from each edge, and 8 in. OC on the perimeter with a screw located 2 in. from each edge, located 1/2 in. from the end edges of the panel.
**UNITED STATES GYPSUM CO** — Types STRUCTO-CRETE, USG®

**Finish Flooring — Floor Topping Mixture* —** Min 3/4 in. thickness of floor topping mixture having a minimum compressive strength of 1800 psi. Refer to manufacturer's instructions accompanying the material for specific mix design.
**UNITED STATES GYPSUM CO** — Types LRK, HSLRK, CSD

**LATICRETE SUPERCAP L L C** — Types LRK, HSLRK

**USG MEXICO S A DE C V** — Types LRK, HSLRK, CSD

**Floor Mat Materials*** — (Optional) — Floor mat material loose laid over the subfloor. Refer to manufacturer's instructions regarding the minimum thickness of floor topping over each floor mat material.
**UNITED STATES GYPSUM CO** — Types SAM, LEVELROCK® Brand Sound Reduction Board, LEVELROCK® Brand Floor Underlayment SRM-25

**System No. 5**

**Structural Cement-Fiber Units* —** Nom 3/4 in. thick, with long edges tongue and grooved. Long dimension of panels to be perpendicular to wood trusses with end joints staggered a min of 2 ft and centered over the trusses. Panels secured to wood trusses with 1-5/8 in. long, No. 8, self- countersinking wood screw spaced a max of 12 in. OC in the field with a screw located 1 in. and 2 in. from each edge, and 8 in. OC on the perimeter with a screw located 2 in. from each edge, located 1/2 in. from the end edges of the panel.
**UNITED STATES GYPSUM CO** — Types STRUCTO-CRETE, USG®

**System No. 6**

**Subflooring —** Nom 23/32 in. thick wood structural panels installed perpendicular to trusses with end joints staggered. Plywood or panels secured to trusses with construction adhesive and No. 6d ringed shank nails, spaced 12 in. OC along each truss. S taples having equal or greater withdrawal and lateral resistance strength may be substituted for the 6d nails.

**Vapor Barrier —** (Optional) — Nom 0.030 in. thick commercial asphalt saturated felt.

**Floor Mat Materials* —** (Optional) — Floor mat material nom 1/8 in. (3 mm) thick loose laid over the subfloor. Floor topping thickness shall be a min of 3/4 in. (19 mm).
**HACKER INDUSTRIES INC** — FIRM-FILL SCM 125

**Alternate Floor Mat Materials — (Optional) —** Floor mat material nom 1/4 in. (6 mm) thick loose laid over the subfloor. Floor topping thickness shall be a min of 1 in. (25 mm).
**HACKER INDUSTRIES INC** — Type FIRM-FILL SCM 250

**Alternate Floor Mat Materials** — (Optional) — Floor mat material nom 3/8 in. (10 mm) thick loose laid over the subfloor. Floor topping thickness shall be a min of 1-1/4 in. (32 mm)
**HACKER INDUSTRIES INC** — FIRM-FILL SCM 400

**Alternate Floor Mat Materials —** (Optional) — Floor mat material nom 3/4 in. (19 mm) thick loose laid over the subfloor. Floor topping thickness shall be a min of 1-1/2 in. (38 mm).
**HACKER INDUSTRIES INC** — Type FIRM-FILL SCM 750

**U S GREENFIBER L L C** — INS710, INS740, INS750LD, INS760LD, INS770LD, & SANCTUARY to be used with dry application only.

5B. **Fiber, Sprayed* —** (Loose Fill 100% Borate Formulation) — (Optional) — As an alternate to Items 5 and 5A, The finished rating when Fiber, Sprayed is used has not been determined. The fiber is applied without water or adhesive at a minimum dry density of 0.5 lb/ft $^3$ and at a max thickness of 3-1/2 in., in accordance with the application instructions supplied with the product. Wire mesh (Item 10) shall be attached to the furring channels to facilitate installation of the material. When Item 5B (Fiber, Sprayed) is used, two layers of gypsum board required as described in Item 7. Not evaluated for use with Item 6B, 6C, 6D, 6E, 6F, 6G, 6H or 6I.
**U S GREENFIBER L L C** — INS710, INS740, INS750LD, INS760LD, INS770LD, & SANCTUARY to be used with dry application only.

5C. **Foamed Plastic* —** (As alternate to Item 5, 5A, or 5B, Not Shown) — Spray foam insulation applied directly to the underside of the plywood subflooring. Spray foam insulation installed to a maximum thickness of 10 in. at a nominal 0.5 lb/ft $^3$ density, while maintaining a minimum 8-1/2 in. clearance between the spray foam insulation and the gypsum board (Item 7). Spray foam insulation is limited for use with minimum 18 in. deep trusses (Item 2). When spray foam insulation is installed, resilient channels (Item 6) shall be installed maximum 12 in. OC, with channels adjacent to butt joints of gypsum board (Item 7) spaced maximum 3 in. away from gypsum butt joints. Gypsum board (Item 7) to be installed using minimum 1-1/4 in. long Type S screws, spaced maximum 8 in. OC, and butted end joints shall be staggered min. 2 ft within the assembly, and occur midway between the continuous furring channels. If used with a fire damper (Items 4 through 4H) in the concealed space, minimum 1 in. clearance to be maintained between damper housing and spray foam insulation. Not evaluated for use with Items 5 through 5B, or 6A through 6I.
**SES FOAM INC** — Sucreseal

5D. **Cavity Insulation - Batts and Blankets* or Fiber, Sprayed* —** (As described above in Items 5 through 5B) — (For Use with Item 7A, Not Shown) — Min. 3-1/2 in thick with no limit on maximum thickness fitted in the concealed space, draped over the resilient channel (Item 6H) gypsum board (Item 7A) ceiling membrane.

5E. **Foamed Plastic* —** (As alternate to Item 5, 5A, or 5C, Not Shown) — Spray foam insulation applied directly to the underside of the plywood subflooring. Spray foam insulation installed to a maximum thickness of 10 in. at a nominal 0.5 lb/ft $^3$ or 2.0 lb/ft $^3$ density, depending on the product installed. Spray foam insulation is limited to use with minimum 18 in. deep trusses (Item 2). When spray foam insulation is installed, resilient channels (Item 6) shall be installed maximum 12 in. OC, with channels adjacent to butt joints of gypsum board (Item 7) spaced maximum 3 in. away from gypsum butt joints. Gypsum board (Item 7) to be installed using minimum 1-1/4 in. long Type S screws, spaced maximum 8 in. OC, and butted end joints shall be staggered min. 2 ft within the assembly, and occur midway between the continuous furring channels. If used with a fire damper (Items 4 through 4H) in the concealed space, minimum 1 in. clearance to be maintained between damper housing and spray foam insulation. Not evaluated for use with Items 5 through 5B, or 6A through 6I.
**BASF CORP** — Everlite® NM, Everlite® G, FI178®, Styrofoam® 178, Styrofoam® 81206, Walltite® 200, Walltite® US, Walltite® US-N, and Walltite® HP+

5F. **Foamed Plastic* —** — (As alternate to Item 5, 5A, 5B, 5C or 5E, Not Shown) — Spray foam insulation applied directly to the underside of the plywood subflooring. Spray foam insulation installed to a maximum thickness of 17 in. at a nominal 0.5 lb/ft $^3$ density, while maintaining a minimum 1-1/2 in. clearance between the spray foam insulation and the gypsum board (Item 7). Spray foam insulation is limited for use with minimum 18 in. deep trusses (Item 2). When spray foam insulation is installed, resilient channels (Item 6) shall be installed maximum 12 in. OC, with channels adjacent to butt joints of gypsum board (Item 7) spaced maximum 3 in. away from gypsum butt joints. Gypsum board (Item 7) to be installed using minimum 1-1/4 in. long Type S screws, spaced maximum 8 in. OC, and butted end joints shall be staggered min. 2 ft within the assembly, and occur midway between the continuous furring channels. If used with a fire damper (Items 4 through 4K) in the concealed space, no clearance is necessary between damper housing and spray foam insulation. Not evaluated for use with Items 5 through 5B, or 6A through 6I.
**SES FOAM INC** — EasySeal.5

5G. **Foamed Plastic* —** (As alternate to Item 5 - not to be used in combination with any alternates to Item 5) — Spray foam insulation applied directly to the underside of the plywood subflooring. Spray foam insulation installed to a maximum thickness of 11 in. at a nominal 0.5 lb/ft $^3$ - 2.5 lb/ft $^3$ density, while maintaining a minimum 7 in. clearance between the spray foam insulation and the gypsum board (Item 7). Spray foam insulation is limited for use with minimum 18 in. deep trusses (Item 2). When spray foam insulation is installed, resilient channels (Item 6) shall be installed maximum 12 in. OC, with channels adjacent to butt joints of gypsum board spaced maximum 3 in. away from gypsum butt joints. Gypsum board to be installed using minimum 1-1/4 in. long Type S screws, spaced maximum 8 in. OC, and butted end joints shall be staggered min. 2 ft within the assembly, and occur midway between the continuous furring channels. If used with a fire damper (Items 4 through 4K) in the concealed space, no clearance is necessary between damper housing and spray foam insulation. Only for use with Item 6 not evaluated for use with alternates to Item 6.
**CARLISLE SPRAY FOAM INSULATION** — Types SealThe Pro Closed Cell (CC), SealThe Pro Open Cell (OC), SealThe Pro OCX, SealThe Pro No Trim 21, SealThe Pro One Zero, Foamulate Closed Cell, Foamulate OCX, Foamulate 70, and Foamulate HFO.

6. **Resilient Channels —** Formed from min 25 MSG galv steel installed perpendicular to trusses. Where there is no insulation installed in the concealed space the resilient channels are spaced 24 in. OC. When insulation (Item 5) is secured to the underside of the subfloor the resilient channels are spaced 16 in. OC. When insulation, Items 5, 5A or 5B is applied over the resilient channel/gypsum panel ceiling membrane, or when Item 5C, 5E or 5F is applied to underside of subflooring, the resilient channels are spaced 12 in. OC. Channels secured to each truss with 1-1/4 in. long Type S bugle head steel screws. Channels overlapped 4 in. at splices. Two channels, spaced 6 in. OC, oriented opposite each gypsum panel end joint as shown in the above illustration. Additional channels shall extend 6 in. beyond each side edge of panel.

6A. **Steel Framing Members* —** (Not Shown) — As an alternate to Item 6.
a. **Furring Channels —** Formed of No. 25 MSG galv steel, 2-9/16 in. or 2-23/32 in. wide by 7/8 in. deep, spaced 16 in. OC perpendicular to wood structural members. When insulation, Items 5, 5A or 5B is applied over the furring channel/gypsum panel ceiling membrane, the furring channel spacing shall be reduced to 12 in. OC. Channels secured to trusses as described in Item b. Ends of adjoining channels overlapped 6 in. and tied together with double strand of No. 18 AWG galv steel wire near each end of overlap.

b. **Steel Framing Members* —**
Used to attach furring channels (Item a) to trusses (Item 2). Clips spaced 48 in. OC. RSIC-1 and RSIC-1 (2.75) clips secured to alternating trusses with No. 8 x 2-1/2 in. coarse drywall screw through the center grommet. RSIC-V and RSIC-V (2.75) clips secured to alternating trusses with No. 8 x 1-1/2 in. coarse drywall screw through the center hole. RSIC-SI-X secured to alternating trusses with No.10 X 1-1/2 in. coarse screw. Furring channels are friction fitted into clips. RSIC-1, RSIC-V and RSIC-SI-X clips for use with 2-9/16 in. wide furring channels. RSIC-1 (2.75) and RSIC-V (2.75) clips for use with 2-23/32 in. wide furring channels. Adjoining channels are overlapped as described in Item a. As an alternate, ends of adjoining channels may be overlapped 6 in. and secured together with two self-tapping No. 6 framing screws, min 7/16 in. long at the midpoint of the overlap, with one screw on each flange of the channel. Additional clips required to hold furring channel that supports the gypsum board butt joints, as described in Item 7. When **Fiber, Sprayed** (Item 5B) is used, two layers of room for 5/8 in. thick, 4 ft wide gypsum board shall be installed as described in Item 7.
**PAC INTERNATIONAL L L C** — Types RSIC-1, RSIC-V, RSIC-1 (2.75), RSIC-V (2.75), RSIC-SI-X

6B. **Steel Framing Members —** (Not Shown) — As an alternate to Item 6, main runners, cross tees, cross channels and wall angle as listed below.
a. **Main Runners —** Nom 10 or 12 ft long, 15/16 in. or 1-1/2 in. wide face, spaced 4 ft. OC. Main runners suspended by min 12 SWG galv steel hanger wires spaced 48 in. OC. Hanger wires to be located adjacent to main runner/cross tee intersections. Hanger wires wrapped and twist-tied on 16d nails driven in to side of trusses at least 5 in. above the bottom face.

**Metal Lath (Optional) —** (Optional) — For use with 3/8 in. (10 mm), or greater, floor mat materials, 3/8 in. expanded steel diamond mesh, 3.4 lbs/sq yd placed over the floor mat material. Hacker Floor Primer to be applied prior to the placement of the metal lath. When metal lath is used, floor topping thickness a nom 1 in. (25 mm) over the floor mat.

**Finish Flooring — Floor Topping Mixture* —** Min 3/4 in. thickness of floor topping mixture having a min compressive strength of 1100 psi. Mixture shall consist of 6.8 gal of water to 80 lbs of floor topping mixture to 1.9 cu ft of sand. Refer to the manufacturer's instructions accompanying the material and/or contact the manufacturer's technical support for specific mix design and minimum thickness recommended for use with eligible floor mat(s).
**HACKER INDUSTRIES INC** — Firm-Fill Gypsum Concrete, Firm-Fill 2610, Firm-Fill 3310, Firm-Fill 4010, Gyp-Span Radiant

**System No. 7**

**Subflooring —** Nom 23/32 in. thick wood structural panels installed perpendicular to trusses with end joints staggered. Plywood or panels secured to trusses with construction adhesive and No. 6d ringed shank nails, spaced 12 in. OC along each truss. S taples having equal or greater withdrawal and lateral resistance strength may be substituted for the 6d nails.

**Vapor Barrier —** (Optional) — Nom 0.030 in. thick commercial asphalt saturated felt.

**Finish Floor* — Mineral and Fiber Board —** Min. 1/2 in. thick, supplied in sizes ranging from 3 ft by 4 ft to 8 ft by 12 ft.
**HOMASOTE CO** — Type 440-32 Mineral and Fiber Board

**System No. 8**

**Subflooring** —Nom 23/32 in. thick wood structural panels installed perpendicular to trusses with end joints staggered. Plywood or panels secured to trusses with construction adhesive and No. 6d ringed shank nails, spaced 12 in. OC along each truss. S taples having equal or greater withdrawal and lateral resistance strength may be substituted for the 6d nails.

**Vapor Barrier —**(Optional) - Nom 0.030 in. thick commercial asphalt saturated felt.

**Floor Mat Materials*** — (Optional) — Floor mat material nom 5/64 in. (2 mm) thick adhered to subfloor with Hacker Floor Primer. Primer to be applied to the surface of the mat prior to the placement of floor-topping mixture. Floor topping thickness a min 1 in. over the floor mat.
**HACKER INDUSTRIES INC** — Type Hacker Sound-Mat

**Alternate Floor Mat Materials** — (Optional) — Floor mat material nom 1/4 in. (6 mm) thick adhered to subfloor with Hacker Floor Primer. Primer to be applied to the surface of the mat prior to the placement of a min 1-1/4 in. (32 mm) of floor-topping mixture.
**HACKER INDUSTRIES INC** — Type Hacker Sound-Mat II

**Metal Lath (Optional)** — For use with 3/8 in. (10 mm) floor mat materials, 3/8 in. expanded steel diamond mesh, 3.4 lbs/sq yd placed over the floor mat material. Hacker Floor Primer to be applied prior to the placement of the metal lath. When metal lath is used, floor topping thickness a nom 1-1/4 in. over the floor mat.

**Finish Flooring — Floor Topping Mixture* —** Min 3/4 in. thickness of floor topping mixture having a min compressive strength of 1100 psi. Mixture shall consist of 6.8 gal of water to 80 lbs of floor topping mixture to 1.9 cu ft of sand. Refer to the manufacturer's instructions accompanying the material and/or contact the manufacturer's technical support for specific mix design and minimum thickness recommended for use with eligible floor mat(s).
**HACKER INDUSTRIES INC** — Firm-Fill Gypsum Concrete, Firm-Fill High Strength, Gyp-Span Radiant

2. **Trusses —** Parallel chord trusses, spaced a max of 24 in. OC, fabricated from nom 2 by 4 lumber, with lumber oriented vertically or horizontally. Min truss depth is 12 in. when no **Ceiling Damper*** is used and 18 in. when a **Ceiling Damper*** is used. Truss members secured together with min 0.0356 in. thick galv steel plates. Plates have 5/16 in. long teeth projecting perpendicular to the plane of the plate. The teeth are in pairs facing each other (made by the same punch), forming a split tooth type plate. Each tooth has a chisel point on its outside edge. These points are diagonally opposite each other for each pair. The top half of each tooth has a twist for stiffness. The pairs are repeated on approx. 7/8 in. centers with four rows of teeth per inch of plate width.

3. **Air Duct* —** Any UL Class 0 or Class 1 flexible air duct installed in accordance with the instructions provided by the damper manufacturer.

4. **Ceiling Damper* —** For use with min 18 in. deep trusses. Max nom area shall be 324 sq in. with the length not to exceed 24 in. and the width not to exceed 20 in. Max height of damper shall be 14 in. Aggregate damper openings shall not exceed 162 sq in. per 100 sq ft of ceiling area. Damper installed in accordance with the manufacturers installation instructions provided with the damper. A steel grille (Item 9) shall be installed in accordance with installation instructions.
**C&S AIR PRODUCTS** — Model RD-521

**POTTORFF** — Model CFD-521

4A. **Alternate Ceiling Damper* —** For use with min 18 in. deep trusses. Max nom area shall be 196 sq in. with the length not to exceed 26 in. and the width not to exceed 14 in. Max height of damper shall be 7 in. Aggregate damper openings shall not exceed 98 sq in. per 100 sq ft of ceiling area. Damper installed in accordance with the manufacturers installation instructions provided with the damper. A steel grille (Item 9) not to exceed 144 in.$^2$ shall be installed in accordance with installation instructions.
**C&S AIR PRODUCTS** — Model RD-521-BT

**POTTORFF** — Model CFD-521-BT

b. **Cross Tees or Channels —** Nom 4 ft long cross tees, with 15/16 in. or 1-1/2 in. wide face, or nom 4 ft long cross channels, with 1-1/2 in. wide face, either spaced 16 in. OC, installed perpendicular to the main runners. Additional cross tees or channels used 8 in. from each side of butted gypsum board end joints. The cross tees or channels may be riveted or screw-attached to the wall angle or channel to facilitate the ceiling installation.

c. **Wall Angle or Channel —** Painted or galv steel angle with 1 in. legs or channel with 1 in. legs, 1-9/16 in. deep attached to walls at perimeter of ceiling with fasteners 16 in. OC. To support steel framing member ends and for screw-attachment of the gypsum panel.
**CGC INC** — Type DGL or RX

**USG INTERIORS LLC** — Type DGL or RX

6C. **Steel Framing Members* —** (Not Shown) — As an alternate to Item 6.
a. **Furring Channels —** Hat-shaped furring channels, 7/8 in. deep by 2-5/8 in. wide at the base and 1-1/4 in. wide at the face, formed from No. 25 ga. galv steel, spaced max. 16 in. OC perpendicular to trusses and Cold Rolled Channels (Item 6Cb). Furring channels secured to Cold Rolled Channels at every intersection with a 1/2 in. pan head self-drilling screw through each furring channel leg. Ends of adjoining channels overlapped 4 in. and tied together with two double strand No. 18 SWG galv steel wire ties, one at each end of overlap. Supplemental furring channels at base layer and outer layer gypsum board butt joints are not required. Batts and Blankets draped over furring channels as described in Item 5. Two layers of gypsum board attached to furring channels as described in Item 7.

b. **Cold Rolled Channels —** 1-1/2 in. by 1/2 in., formed from No. 16 ga. galv steel, positioned vertically and parallel to trusses, friction-fitted into the channel caddy on the Steel Framing Members (Item 6Cd). Adjoining lengths of cold rolled channels lapped min. 6 in. and wire-tied together with two double strand 18 SWG galv steel wire ties, one at each end of overlap.

c. **Blocking —** Where truss design does not permit direct, full contact of the hanger bracket, a piece of nominal 2 by 4 in. lumber (blocking), min. 6 in. long to permit full contact of the hanger bracket, to be secured vertically to the side of the truss (Item 2) at the top and bottom of the blocking at each Steel Framing Member (Item 6Cd) location.

d. **Steel Framing Members* —** Hangers spaced 48 in. OC. max along truss, and secured to the Blocking (Item 6Cc) on alternating trusses with a single 5/16 in. by 2 in. hex head lag bolt or four #6 1-1/4 in. drywall screws through mounting hole(s) on the hanger bracket. The two 1/4 in. long steel teeth on the hanger are embedded in the side of the blocking. Hanger positioned on blocking and leveling bolt height adjusted such that furring channels are flush with bottom of trusses before gypsum board installation. Spring gauge of hanger chosen per manufacturer's instructions.
**KINETICS NOISE CONTROL INC** — Type ICW

6D. **Steel Framing Members* —** (Not Shown) — As an alternate to Item 6.
a. **Furring Channels —** Formed of No. 25 MSG galv steel, 2-3/8 in. wide by 7/8 in. deep, spaced 16 in. OC perpendicular to wood structural members. When insulation, Items 5 or 5A is applied over the furring channel/gypsum panel ceiling membrane, the furring channel spacing shall be reduced to 12 in. OC. Channels secured to trusses as described in Item b. Ends of adjoining channels overlapped 6 in. and tied together with double strand of No. 18 AWG galv steel wire near each end of overlap.

b. **Steel Framing Members* —** Used to attach furring channels (Item a) to trusses (Item 2). Clips spaced 48 in. OC, and secured to the bottom chord of alternating trusses with two No. 8 x 2-1/2 in. coarse drywall screw through center grommet. When insulation, Items 5 or 5A is applied over the furring channel/gypsum panel ceiling membrane, the furring channel spacing shall be reduced to 12 in. OC. Channels secured to trusses as described in Item b. Ends of adjoining channels overlapped 6 in. and tied together with double strand of No. 18 AWG galv steel wire near each end of overlap. As an alternate, ends of adjoining channels may be overlapped 6 in. and secured together with two self-tapping No. 6 framing screws, min 7/16 in. long at the midpoint of the overlap, with one screw on each flange of the channel. Additional clips required to hold furring channel that supports the gypsum board butt joints, as described in Item 7. Two layers of gypsum board required as described in Item 7. Not evaluated for use with Item 5B.
**KINETICS NOISE CONTROL INC** — Type Isomax

6E. **Steel Framing Members* —** (Not Shown) — As an alternate to Item 6.
a. **Furring Channels —** Formed of No. 25 MSG galv steel, 2-3/8 in. wide by 7/8 in. deep, spaced 16 in. OC perpendicular to wood structural members. When insulation, Items 5 or 5A is applied over the furring channel/gypsum panel ceiling membrane, the furring channel spacing shall be reduced to 12 in. OC. Channels secured to trusses as described in Item b. Ends of adjoining channels overlapped 6 in. and tied together with double strand of No. 18 AWG galvanized steel wire near each end of overlap.

b. **Steel Framing Members* —** Used to attach furring channels (Item a) to trusses (Item 2). Clips spaced 48 in. OC, and secured to the bottom chord of alternating trusses with one No. 8 x 2-1/2 in. coarse drywall screw through center grommet. When insulation, Items 5 or 5A is applied over the furring channel/gypsum panel ceiling membrane, the furring channel spacing shall be reduced to 12 in. OC. Channels secured to trusses as described in Item b. Ends of adjoining channels overlapped 6 in. and tied together with double strand of No. 18 AWG galv steel wire near each end of overlap. As an alternate, ends of adjoining channels may be overlapped 6 in. and secured together with two self-tapping No. 6 framing screws, min 7/16 in. long at the midpoint of the overlap, with one screw on each flange of the channel. Additional clips required to hold furring channel that supports the gypsum board butt joints, as described in Item 7. Two layers of gypsum board required as described in Item 7. Not evaluated for use with Item 5B.
**KINETICS NOISE CONTROL INC** — Type Isomax

6F. **Steel Framing Members* —** (Not Shown) — As an alternate to Item 6, furring channels and Steel Framing Members as described below.
a. **Furring Channels —** Formed of No. 25 MSG galv steel, 2-5/8 in. wide by 7/8 in deep, spaced 16 in OC, perpendicular to joists. When insulation, Items 5 or 5A is applied over the furring channel/gypsum panel ceiling membrane, the furring channel spacing shall be reduced to 12 in. OC. Channels secured to joists as described in Item b.

b. **Steel Framing Members* —** Used to attach furring channels (Item a) to the trusses (Item 2). Clips spaced at 48" OC and secured to the bottom of the joists with one 2 in. Coarse Drywall Screw with 1 in. diam washer through the center hole. Furring channels are then friction fitted into clips. Ends of channels are overlapped 6" and tied together with double strand of No. 18 AWG galvanized steel wire. Additional clips are required to hold furring channel that supports the gypsum board butt joints as described in Item 7.
**STUDCO BUILDING SYSTEMS** — RESILMOUNT Sound Isolation Clips - Type A237 or A237R

6G. **Steel Framing Members* —** (Not Shown) — As an alternate to Item 6 — Not for use with Items 5, 5A or 5B — Main runners nom 12 ft long, spaced 72 in. OC. Main runners suspended by min 12 SWG galv steel hanger wires spaced 48 in. OC. Cross tees, nom 6 ft long, installed perpendicular to main runners and spaced 24 in. OC. Additional 6 ft long cross tees required at each gypsum board end joint with butted gypsum board end joints centered between cross tees spaced 8 in. OC. The main runners and cross tees may be riveted or screw attached to the wall angle or channel to facilitate the ceiling installation.

4B. **Alternate Ceiling Damper* —** For use with min 18 in. deep trusses. Max nom area shall be 256 sq in. with the length not to exceed 24 in. and the width not to exceed 20 in. Max height of damper shall be 17 in. Aggregate damper openings shall not exceed 128 sq in. per 100 sq ft of ceiling area. Damper installed in accordance with the manufacturers installation instructions provided with the damper. A steel grille (Item 9) shall be installed in accordance with installation instructions.
**C&S AIR PRODUCTS** — Models RD-521-1P, RD-521-NP

**POTTORFF** — Models CFD-521-1P, CFD-521-NP

4C. **Alternate Ceiling Damper* —** For use with min 18 in. deep trusses. Max nom area shall be 144 sq in. with the length not to exceed 14 in. and the width not to exceed 12 in. Max height of damper shall be 17-7/8 in. Aggregate damper openings shall not exceed 74 sq in. per 100 sq ft of ceiling area. Damper installed in accordance with the manufacturers installation instructions provided with the damper. A steel grille (Item 9) shall be installed in accordance with installation instructions.
**C&S AIR PRODUCTS** — Models RD-521-90, RD-521-NP90

**POTTORFF** — Models CFD-521-90, CFD-521-90NP

4D. **Alternate Ceiling Damper* —** Ceiling damper & fan assembly for use with min 18 in. deep trusses. Max nom area shall be 75 sq in. with the length not to exceed 8-9/16 in. and the width not to exceed 8-3/4 in. Max height of damper shall be 9-7/8 in. Aggregate damper openings shall not exceed 38 sq in. per 100 sq ft of ceiling area. Damper shall be installed in combination with one of the fan models described in, and in accordance with, the manufacturer's installation instructions provided with the damper. A plastic grille (Item 9) shall be installed in accordance with installation instructions.
**DELTA ELECTRONICS INC** — Models CFDZ, GBR-CFD, ITG-CFD

4E. **Alternate Ceiling Damper* —** Ceiling damper & fan assembly for use with min 18 in. deep trusses. Max nom area shall be 75 sq in. with the length not to exceed 9-1/4 in. and the width not to exceed 9-3/4 in. Max height of damper shall be 9-7/8 in. Aggregate damper openings shall not exceed 45 sq in. per 100 sq ft of ceiling area. Damper shall be installed in combination with one of the fan models described in, and in accordance with, the manufacturer's installation instructions provided with the damper. A plastic grille (Item 9) shall be installed in accordance with installation instructions.
**DELTA ELECTRONICS INC** — Model SG-CFD

4F. **Alternate Ceiling Damper* —** Ceiling damper & fan assembly for use with min 18 in. deep trusses. Max nom area shall be 131 sq in. with the length not to exceed 11-1/16 in. and the width not to exceed 11-7/8 in. Aggregate damper openings shall not exceed 66 sq in. per 100 sq ft of ceiling area. Damper shall be installed in combination with one of the fan models described in, and in accordance with, the manufacturer's installation instructions provided with the damper. A plastic grille (Item 9) shall be installed in accordance with installation instructions.
**DELTA ELECTRONICS INC** — Model SMT-CFD

4G. **Alternate Ceiling Damper* —** Ceiling damper & fan assembly for use with min 18 in. deep trusses. Max nom area shall be 103 sq in. with the length not to exceed 10-1/8 in. and the width not to exceed 10-1/8 in. Aggregate damper openings shall not exceed 52 sq in. per 100 sq ft of ceiling area. Damper shall be installed in combination with one of the fan models described in, and in accordance with, the manufacturer's installation instructions provided with the damper. A plastic grille (Item 9) shall be installed in accordance with installation instructions.
**PANASONIC CORPORATION, PANASONIC CORPORATION OF NORTH AMERICA** — Model PC-9DSCS

4H. **Alternate Ceiling Damper* —** Ceiling damper & fan assembly for use with min 18 in. deep trusses. Max nom area shall be 113 sq in. with the length not to exceed 10-1/8 in. and the width not to exceed 11-1/8 in. Aggregate damper openings shall not exceed 57 sq in. per 100 sq ft of ceiling area. Damper shall be installed in combination with one of the fan models described in, and in accordance with, the manufacturer's installation instructions provided with the damper. A plastic grille (Item 9) shall be installed in accordance with installation instructions.
**BROAN-NUTONE L L C** — Model RDFDWT

4I. **Alternate Ceiling Damper* —** Ceiling damper & fan assembly for use with min 18 in. deep trusses. Max nom area shall be 79 sq in. with the length not to exceed 10 in. and the width not to exceed 7-15/16 in. Aggregate damper openings shall not exceed 40 sq in

6N. **Steel Framing Members*** — (Optional, Not Shown) — Used as an alternate method to attach resilient channels to structural members. A resilient sound isolation accessory shall be used at each attachment point of the resilient channels and spaced max 24 in. O.C. Channel ends butted and centered under the structural members and attached with one accessory at each end. Additional accessories used to hold resilient channels that support the gypsum board end joints. The accessory envelops the mounting edge of the resilient channel. The accessory and resilient channel are fastened to the structural members with the screws supplied with the accessory and per the accessory manufacturer's installation instructions. Gypsum Board butt joints staggered minimum 24 in. OC and Gypsum Board screws spaced 8 in. OC when used.
**PAC INTERNATIONAL L L C** — Types RC-1 Isost

7. **Gypsum Board*** — Nom 5/8 in. thick, 48 in. wide gypsum panels. When resilient channels (Item 6) are used, gypsum panels installed with long dimension perpendicular to resilient channels. Gypsum panels secured with 1 in. long Type S bugle head steel screws spaced 12 in. OC and located a min of 1/2 in. from side joints and 3 in. from the end joints. When insulation (Items 5 or 5A) is applied over the resilient channel/gypsum panel ceiling membrane screw spacing shall be reduced to 8 in. OC. When insulation (Item 5C, 5E or 5F) is applied to the underside of the subflooring, screw spacing shall be reduced to 8 in. OC and minimum 1-1/4 in. long Type S screws to install gypsum to the resilient channels (Item 6), and butted end joints shall be staggered min. 2 ft within the assembly, and occur midway between the continuous furring channels. End joints secured to both resilient channels as shown in end joint detail. When **Steel Framing Members** (Item 6A) are used, gypsum panels installed with long dimensions perpendicular to furring channels. Panels attached to the furring channels using 1 in. long Type S bugle-head steel screws spaced 8 in. OC along butted end joints and in the field of the panel. Butted end joints shall be staggered min. 2 ft within the assembly, and occur midway between the continuous furring channels. Each end of each gypsum panel shall be supported by a single length of furring channel equal to the width of the gypsum panel plus 6 in. on each end. The two support furring channels shall be spaced approximately 3-1/2 in. OC, and be attached to underside of the truss with one clip at each end of the channel. When **Steel Framing Members*** (Item 6B) are used, gypsum panels installed with long dimension perpendicular to cross tees with side joints centered along main runners and end joints centered along cross tees. Panels fastened to cross tees with 1 in. long Type S bugle head screws spaced in the field and 8 in. OC along end joints. Panels fastened to main runners with 1 in. long Type S bugle-head screws spaced between cross tees. Screws along sides and ends of panels spaced 6 in. OC. Gypsum panels secured to cross tees with 1 in. long Type S bugle-head steel screws spaced 12 in. OC and located a min of 1/2 in. from side joints and 3 in. from the end joints. Butted end joints shall be staggered min. 2 ft within the assembly, and occur midway between the continuous furring channels. Each end of each gypsum board shall be supported by a single length of furring channel equal to the width of the gypsum board plus 6 in. on each end. The two support furring channels shall be spaced approximately 3-1/2 in. OC, and be attached to the underside of the truss with one clip at each end of the channel. Outer layer gypsum board secured with 1-5/8 in. long Type S screws spaced 8 in. OC and 1-1/2 in. from the end joint. Butted end joints to be offset a min. of 8 in. from base layer end joints. Butted side joints of outer layer to be offset min. 18 in. from butted side joints of base layer. When **Steel Framing Members** (Item 6C) are used, two layers of nom 5/8 in. thick, 4 ft wide gypsum board are installed with long dimensions perpendicular to furring channels (Item 6C). Base layer attached to the furring channels using 1 in. long Type S bugle head steel screws spaced 8 in. OC along butted end joints and 12 in. OC in the field of the board. Butted end joints centered on the continuous furring channels. Butted base layer end joints to be offset a min of 16 in. in adjacent courses. Outer layer attached to the furring channels using 1-5/8 in. long Type S bugle head steel screws spaced 8 in. OC at butted end joints and 12 in. OC in the field. Butted end joints centered on the continuous furring channels and offset a min of 16 in. from butted end joints of base layer. Butted side joints of outer layer to be offset min 16 in. from butted side joints of base layer. When **Steel Framing Members** (Item 6D) are used, two layers of nom 5/8 in. thick, 4 ft wide gypsum board are installed with long dimensions perpendicular to furring channels. Base layer attached to the furring channels using 1 in. long Type S bugle-head screws spaced 12 in. OC in the field of the board. Butted end joints shall be staggered min 2 ft. within the assembly, and occur midway between the continuous furring channels. Each end of each gypsum board shall be supported by a single length of furring channel equal to the width of the gypsum board plus 6 in. on each end. The two support furring channels shall be spaced approximately 4 in. OC, and be attached to underside of the truss with one lsomax clip at each end of the channel. Screw spacing along the gypsum board butt joint shall be 8 in. OC. Outer layer attached to the furring channels using 1-5/8 in. long Type S bugle-head steel screws spaced 12 in. OC in the field. The end of the outer layer boards at the butt joint shall be attached to the base layer boards with 1-5/8 in. long Type G screws spaced 8 in. OC and 1-1/2 in. from the end joint. Butted end joints to be offset a min of 8 in. from base layer end joints. Butted side joints of outer layer to be offset min. 18 in. from butted side joints of base layer. When **Steel Framing Members** (Item 6E) are used, one layer of nom 5/8 in. thick, 4 ft wide are installed with long dimensions perpendicular to furring channels. Gypsum board secured to furring channels with 1 in. long No. 6 Type S bugle-head steel screws spaced 12 in. OC in the field of the board. Butted end joints shall be staggered minimum 2 ft. within the assembly. Additional furring channels constructed as per Item 6E shall be used to support each end of each gypsum board. These additional furring channels shall be attached to underside of the truss with Genie Clips as described in Item 6E. Screw spacing along the gypsum board butt joint shall be 8 in. OC. Outer layer attached to the furring channels using 1-5/8 in. long No. 6 Type S bugle-head steel screws spaced 12 in. OC in the field. The outer layer boards at the butt joint shall be attached to the base layer boards with No. 10, 1-1/2 in. long drywall screws spaced 8 in. OC and 1-1/2 in. from the end joint. Butted end joints to be offset a min of 24 in. from base layer end joints. Butted side joints of outer layer to be offset min 16 in. from butted side joints of base layer. When **Steel Framing Members** (Item 6F) are used, one layer of nom 5/8 in. thick, 4 ft wide gypsum board is installed with long dimensions perpendicular to furring channels. Gypsum board secured to furring channels with nom 1 in. long Type S bugle-head steel screws spaced 8 in. OC in the field of the board. Gypsum board butted end joints shall be staggered minimum 48 in. and centered over main furring channels. At the gypsum board butt joints, each end of each gypsum board shall be supported by a single length of furring channel equal to the width of the gypsum board plus 3 in. on each end. The two support furring channels shall be spaced approximately 3 in. from joint. Screw spacing along the gypsum board butt joint and along both additional channels shall be 8 in. OC. Additional screws shall be placed in the adjacent section of gypsum board into the aforementioned 3 in. extension of the extra butt joint channels as well as into the main channel that runs between. Butt joint furring channels shall be attached with one RESILMOUNT Sound Isolation Clip at each end of the channel.
When alternate **Steel Framing Members*** (Item 6G) are used, gypsum board sheets installed with long dimension (side joints) perpendicular to the 6 ft long cross tees with the end joints staggered min 4 ft and centered between cross tees which are spaced 8 in. OC. Gypsum board side joints may occur beneath or between main runners. Prior to installation of the gypsum board sheets, backer strips consisting of nom 7-3/4 in. wide pieces of gypsum board are to be laid atop the cross tee flanges and centered over each butted end joint location. The backer strips are to be secured to the flanges of the cross tees at opposite corners of the backer strip with hold down clips to prevent the backer strips from being uplifted during screw-attachment of the gypsum board sheets. Gypsum board fastened to cross tees with 1 in. drywall screws spaced 1 in. and 4 in. from the side joints and max 8 in. OC in the field of the board. The butted end joints are to be secured to the backer strip with No. 10 by 1-1/2 in. long Type G laminating screws located 1 in. from each side of the butted end joint and spaced 1 in. and 4 in. from the side joints and max 8 in. OC in the field of the board.

When **Steel Framing Members** (Item 6I) are used, one layer of nom 5/8 in. thick, 4 ft wide gypsum board is installed with long dimensions perpendicular to furring channels. Gypsum board secured to furring channels with nom 1-1/4 in. long, fire thread, #6, Type S bugle-head steel screws spaced 8 in. OC along butt joints and in the field of the board. Gypsum board butted end joints shall be staggered minimum 24 in. and occur 3 in. from the continuous furring channels. At the gypsum board butt joints, an additional single length of furring channel shall be installed and be spaced approximately 3 in. from the butt joint (6 in. from the continuous furring channels) to support the floating end of the gypsum board. Each of these shorter sections of furring channel shall extend one truss beyond the width of the gypsum panel and be attached to the adjacent trusses with one SonaClip at every truss involved with the butt joint.

When **Steel Framing Members** (Item 6J) are used, one layer of nom 5/8 in. thick, 4 ft wide gypsum board is installed with long dimensions perpendicular to resilient channels. Gypsum board secured to resilient channels with nom 1 in. long Type S bugle-head steel screws spaced 8 in. OC in the field of the board and located 3/4 in. from side joints and 3 in. and joints. Gypsum board joints are to be staggered by a minimum of 24 in.

When **Steel Framing Members** (Item 6L) are used, nom 5/8 in. thick, 4 ft wide gypsum board, installed as described in Item 7. Adjacent butt joints staggered minimum 48 in. OC.

When **Steel Framing Members** (Item 6M) are used, nom 5/8 in. thick, 4 ft wide gypsum board. Installed as described in Item 7. Butt joints staggered minimum 24 in. OC.

**CGC INC** — Types C, IP-X2, IPC-AR

**UNITED STATES GYPSUM CO** — Types C, IP-X2, IPC-AR

**USG BORAL DRYWALL SFZ LLC** — Type C

**USG MEXICO S A DE C V** — Types C, IP-X2, IPC-AR

7A. **Gypsum Board*** — For use with Items 5D and 6H. Nom 5/8 in. thick, 48 in. wide gypsum panels installed with long dimension perpendicular to resilient channels. Gypsum panels secured with 1 in. long Type S bugle head steel screws spaced 8 in. OC and located a min of 1/2 in. from side joints and 3 in. from the end joints. Finish Rating with this ceiling system is 20 min.
**CGC INC** — Type ULIX

**UNITED STATES GYPSUM CO** — Type ULIX

8. **Finishing System** — (Not Shown) — Vinyl, dry or premixed joint compound, applied in two coats to joints and screw-heads. Nom 2 in. wide paper tape embedded in first layer of compound over all joints. As an alternate, nom 3/32 in. thick veneer plaster may be applied to the entire surface of gypsum board.

9. **Grille** — Grille installed in accordance with the installation instructions provided with the ceiling damper.

10. **Wire Mesh** — (Not Shown) — For use with Item 5A and 5B — 1 in. 20 gauge galvanized poultry netting installed between the furring channels and gypsum board. The poultry netting is attached with washers and 1/2 in. wafer head screws, spaced 24 in. OC., to the furring channels. The **Fiber, Sprayed** (Item 5A or 5B) is installed through cut-openings in the poultry netting, in-between trusses. The cut-openings in the poultry netting shall be staggered at a maximum of 6 ft.

*** Indicates such products shall bear the UL or cUL Certification Mark for jurisdictions employing the UL or cUL Certification (such as Canada), respectively.**

Last Updated on 2022-08-22

The appearance of a company's name or product in this database does not in itself assure that products so identified have been manufactured under UL Solutions' Follow - Up Service. Only those products bearing the UL Mark should be considered to be Certified and covered under UL Solutions' Follow - Up Service. Always look for the Mark on the product.

UL Solutions permits the reproduction of the material contained in Product iQ subject to the following conditions: 1. The Guide Information, Assemblies, Constructions, Designs, Systems, and/or Certifications (files) must be presented in their entirety and in a non-misleading manner, without any manipulation of the data (or drawings). 2. The statement "Reprinted from Product iQ with permission from UL Solutions" must appear adjacent to the extracted material. In addition, the reprinted material must include a copyright notice in the following format: "©2022 UL LLC."

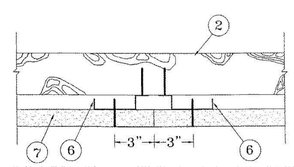


1. **Roofing System*** — Any UL Class A, B or C Roofing System (TGFU) or Prepared Roof Covering (TFWX) acceptable for use over nom 15/32 in. thick wood structural panels secured to trusses with No. 6d ringed shank nails spaced 12 in. OC along each truss. Staples having equal or greater withdrawal and lateral resistance strength may be substituted for the 6d nails. Construction adhesive may be used with either the nails or staples.

2. **Trusses** — Pitched chord wood trusses, spaced a max of 24 in. OC, fabricated from nom 2 by 4 lumber, with lumber oriented vertically or horizontally. Truss members secured together with 0.0356 in. thick galv steel plates. Plates have 5/16 in. long teeth projecting perpendicular to the plane of the plate. The teeth are in pairs facing each other (made by the same punch), forming a split tooth type plate. Each tooth has a chisel point on its outside edge. These points are diagonally opposite each other for each pair. The top half of each tooth has a twist for stiffness. The pairs are repeated on approximately 7/8 in. centers with four rows of teeth per inch of plate width. Where the truss intersects with the interior face of the exterior walls, the min truss depth shall be 5-1/4 in. with a min roof slope of 3/12 and a min average truss depth of 18 in.. Where the truss intersects with the interior face of the exterior walls, the min truss depth may be reduced to 3 in. if the batts and blankets (Item 3) are used as shown in the above Illustration (Alternate Insulation Placement) and are firmly packed against the intersection of the bottom chords and the plywood sheathing.

3. **Batts and Blankets*** — Optional — Glass fiber insulation fitted in the concealed space, draped over the resilient channels and gypsum wallboard ceiling membrane or fastened to underside of roofing system. Any glass fiber insulation bearing the UL Classification Marking as to Surface Burning Characteristics and/or Fire Resistance, having a min density of 0.5 pcf.

3A. **Loose Fill Material*** — As an alternate to Item 3, any loose fill material bearing the UL Classification Marking for Surface Burning Characteristics, having a min density of 0.5 pcf.

3B. **Fiber, Sprayed*** — As an alternate to Item 3 — Any thickness of spray-applied cellulose insulation material, having a min density of 0.5 lb/ft$^3$, applied with water, over the resilient channel/gypsum board ceiling membrane when resilient channels and gypsum board attachment is modified as specified in Items 6 and 7. Fiber, Sprayed is applied with moisture in accordance with the application instructions supplied with the product. The finish rating when Fiber Sprayed is used has not been determined. Alternate application method: The fiber is applied without water or adhesive in accordance with the application instructions supplied with a minimum density of 0.5 lb/ft$^3$ over the resilient channel/gypsum board ceiling membrane when resilient channels and gypsum board attachment is modified as specified in Items 6 and 7. Alternate application method: The fiber is applied without water or adhesive to a nominal density of 3.5 lb/ft$^3$ behind netting (Item 9) stapled to the rafters. The netting is stapled at both lower edges of the rafters creating a cavity to accept the cellulose fiber.
**U S GREENFIBER L L C** — INSTI5, INSTI45, INSTI50.0, and SANCTUARY for use with wet or dry application; INSTI50.D, INSTI55.D, INSTI45.D, INSTI5, INSTI65.D, and INSTI70.D are to be used for dry application only.

3C. **Cavity insulation - Batts and Blankets*, Loose Fill* or Fiber, Sprayed*** — (As described above) in Items 3, 3A and 3B — (For Use with Item 7A, Not Shown) — Min. 3-1/2 in thick with no limit on maximum thickness fitted in the concealed space, draped over the resilient channel (Item 6D)/gypsum board (Item 7A) ceiling membrane.

3D. **Foamed Plastic*** — (As an alternate to Item 3 or 3A, Not Shown) — Spray foam insulation applied directly to the underside of the underside of the roofing system (Item 1). Spray foam insulation installed to a maximum thickness of 10 in. at a nominal 0.5 lb/ft$^3$ or 2.0 lb/ft$^3$ density, depending on the product installed. When spray foam insulation is installed, resilient channels (Item 6) shall be installed maximum 12 in. OC, with channels adjacent to butt joints of gypsum board (Item 7) spaced maximum 3 in. away from gypsum butt joints. Gypsum board (Item 7) to be installed using minimum 1-1/4 in. long Type S screws, spaced maximum 8 in. OC, and butted end joints shall be staggered min. 2 ft within the assembly, and occur midway between the continuous furring channels. If used with a ceiling damper (Items 5 through 5AB) in the concealed space, minimum 1 in. clearance to be maintained between damper housing and spray foam insulation. Not evaluated for use with Items 6A through 6F.
**BASF CORP** — Enertite® NM, Enertite® G, FE178®, Spraylite® 178, Spraylite® 812G6, Walltite® 200, Walltite® US, Walltite® US-N, and Walltite® HP+

3F. **Foamed Plastic*** — (As an alternate to Item 3, 3A, 3B, 3C, or 3D, Not Shown) — Spray foam insulation applied directly to the underside of the underside of the roofing system (Item 1). Spray foam insulation installed to a maximum thickness of 17 in. at a nominal 0.5 lb/ft$^3$ density, while maintaining a minimum 1-1/2 in. clearance between the spray foam insulation and the gypsum board (Item 7). When spray foam insulation is used, resilient channels (Item 6) shall be installed maximum 12 in. OC, with channels adjacent to butt joints of gypsum board (Item 7) installed at 6 in. OC to allow for maximum 3 in. spacing off ends of the gypsum board joints. Gypsum board (Item 7) to be installed using 1-1/4 in. long Type S screws, spaced maximum 8 in. OC, and butted end joints shall be staggered min. 2 ft within the assembly, and occur midway between the continuous furring channels. If used with a ceiling damper (Items 5 through 5AB) in the concealed space, no clearance is necessary between damper housing and spray foam insulation. Not evaluated for use with Items 6A through 6F.
**SES FOAM INC** — EasySeal.5

4. **Air Duct*** — For use with ceiling dampers. - Any UL Class 0 or Class 1 flexible air duct installed in accordance with the instructions provided by the damper manufacturer.

5. **Ceiling Damper*** — Maximum nominal area, 324 sq in. Maximum square size, 18 in. by 18 in. Rectangular sizes not to exceed 324 sq in. with a maximum width of 18 in. Maximum damper height is 14 in. Installed in accordance with the manufacturers installation instructions provided with the damper. Maximum damper openings not to exceed 162 sq in. per 100 sq ft of ceiling area.
**C&S AIR PRODUCTS** — Model RD-521

**POTTORFF** — Model CFD-521

5A. **Alternate Ceiling Damper*** — Max nom area shall be 256 sq in. with the length not to exceed 24 in. and the width not to exceed 20 in. Max height of damper shall be 17 in. Aggregate damper openings shall not exceed 128 sq in. per 100 sq ft of ceiling area. Damper installed in accordance with the manufacturers installation instructions provided with the damper. A steel grille shall be installed in accordance with installation instructions.
**C&S AIR PRODUCTS** — Model RD-521-I7, RD-521-NP

**POTTORFF** — Models CFD-521-I7, CFD-521-NP

5B. **Alternate Ceiling Damper*** — Max nom area shall be 144 sq in. with the length not to exceed 14 in. and the width not to exceed 12 in. Max height of damper shall be 17-7/8 in. Aggregate damper openings shall not exceed 74 sq in. per 100 sq ft of ceiling area. Damper installed in accordance with the manufacturers installation instructions provided with the damper. A steel grille shall be installed in accordance with installation instructions.
**C&S AIR PRODUCTS** — Model RD-521-90, RD-521-NP90

**POTTORFF** — Models CFD-521-90, CFD-521-90NP

5C. **Alternate Ceiling Damper*** — Maximum plenum box size nom. 19 in. long by 19 in. wide and 11-7/8 in. high fabricated from galvanized steel. Installed in accordance with the manufacturers installation instructions provided with the damper. Maximum damper openings not to exceed 128 sq. in. per 100 sq ft of ceiling area.
**AIRE TECHNOLOGIES INC** — Models: CRD model 50 w/Boot, CRD model 50EA w/Boot, CRD model 55 w/Boot, CRD model 55 EA w/Boot

**LLOYD INDUSTRIES INC** — Model CRD 50-BT, CRD 50-EA-BT, CRD 55-BT, CRD 55 EA-BT

5D. **Alternate Ceiling Damper*** — Maximum plenum box size nom. 13 in. long by 13 in. wide and 11-7/8 in. high fabricated from galvanized steel. Installed in accordance with the manufacturers installation instructions provided with the damper. Maximum damper openings not to exceed 50 sq. in. per 100 sq ft of ceiling area.
**AIRE TECHNOLOGIES INC** — Model CRD 50-BT-6, CRD 50-EA-BT-6, CRD 55-BT-6, CRD 55 EA-BT-6, CR050 w-X-BT-6

5E. **Alternate Ceiling Damper*** — Maximum size ceiling outlet in plenum box nom. 12 in. long by 12 in. wide. Plenum box fabricated from galvanized steel. Installed in accordance with the manufacturers installation instructions provided with the damper. Maximum damper openings not to exceed 72 sq. in. per 100 sq ft of ceiling area.
**AIRE TECHNOLOGIES INC** — Models: CRD model 50 w/Boot, CRD model 50EA w/Boot, CRD model 55 w/Boot, CRD model 55 EA w/Boot

**LLOYD INDUSTRIES INC** — Model CRD 50-95T, CRD 50-EA-95BT, CRD 55-95BT, CRD 55 EA-95BT

5F. **Alternate Ceiling Damper*** — Max size ceiling outlet in plenum box nom 16 in. long by 16 in. wide. Aggregate damper openings shall not exceed 128 sq in. per 100 sq ft of ceiling area. Damper installed in accordance with the manufacturers installation instructions provided with the damper.
**CROWN PRODUCTS CO INC** — Models CRD50-FGP8-4.2-C9, -6.0-C9; CRD50-FGP8-4.2-EA-C9, -6.0-EA-C9

**LLOYD INDUSTRIES INC** — Models CRD 50- FGP8-4.2, - 4.2 NL -6.0, -6.0 NL CRD50-EA-FGP8-4.2, -4.2 NL, -6.0, -6.0 NL

5G. **Alternate Ceiling Damper*** — Max plenum box size nom 15 in. long by 15 in. wide and 11-7/8 in. high fabricated from galv steel. Aggregate damper openings shall not exceed 72 sq in. per 100 sq ft of ceiling area. Damper installed in accordance with the manufacturers installation instructions provided with the damper.
**LLOYD INDUSTRIES INC** — Models 45-CRD-LT-BT and 45-CRD-LTD-BT

5H. **Alternate Ceiling Damper*** — Max size ceiling outlet in plenum box nom 10 in. long by 10 in. wide. Plenum box fabricated from galv steel. Aggregate damper openings shall not exceed 50 sq in. per 100 sq ft of ceiling area. Installed in accordance with the manufacturers installation instructions provided with the damper.
**LLOYD INDUSTRIES INC** — Model 45-LTD-95-BT-4

5I. **Alternate Ceiling Damper*** — Max plenum box size nom 19 in. long by 15 in. wide and 11-7/8 in. high fabricated from galv steel. Aggregate damper openings shall not exceed 96 sq in. per 100 sq ft of ceiling area. Damper installed in accordance with the manufacturers installation instructions provided with the damper.
**LLOYD INDUSTRIES INC** — Model CRD50-w X-BT

5J. **Alternate Ceiling Damper*** — Max nom. area shall be 349 sq in. Max. overall length and width shall not exceed 18-11/16 in. by 18-11/16 in. with max. 16 in. by 16 in. register opening. Aggregate damper openings shall not exceed 175 sq in. per 100 sq ft of ceiling area. Damper installed in accordance with the manufacturers installation instructions provided with the damper. An aluminum or steel grille (Item 9) shall be installed in accordance with installation instructions.
**MIAMI TECH INC** — Model RoCRD

5K. **Alternate Ceiling Damper*** — Ceiling damper & fan assembly. Max nom area shall be 75 sq in. with the length not to exceed 8-9/16 in. and the width not to exceed 8-3/4 in. Max height of damper shall be 9-7/8 in. Aggregate damper openings shall not exceed 38 sq in. per 100 sq ft of ceiling area. Damper shall be installed in combination with one of the fan models described in, and in accordance with, the manufacturers installation instructions provided with the damper. A plastic grille shall be installed in accordance with installation instructions.
**DELTA ELECTRONICS INC** — Models CRDZ, GBR-CRD, ITG-CRD

5L. **Alternate Ceiling Damper*** — Max nom area shall be 324 sq in. Max square size shall be 18 in. by 18 in. Rectangular sizes not to exceed 324 sq in. with a max length of 20 in. and a max width of 22 in. Max height of damper shall be 14 in. Aggregate damper openings shall not exceed 154 sq in. per 100 sq ft of ceiling area. Damper installed in accordance with the manufacturer's installation instructions provided with the damper. An aluminum or steel grille (Item 9) shall be installed in accordance with installation instructions.
**UNITED ENERTECH CORP** — Type C-5/6 WT or C-5/6 WTI-CS-5/6 WTS C-5/6 WTP5 (Max nom area 324 sq. in.) or C-5/6 WTS C-5/6 WTP5 (Max nom area 162 sq. in.)

5M. **Alternate Ceiling Damper*** — Max damper assembly size nom 18 in. long by 18 in. wide and 4-1/4 in. high, or 8 in. diam. fabricated from galv steel. Aggregate damper openings shall not exceed 162 sq in. per 100 sq ft of ceiling area. Damper installed in accordance with the manufacturers installation instructions provided with the damper.
**RUSKIN COMPANY** — Model CFD7T, CFD7T-ENS-BT, CFD7T-90-BT, CFD7T-ST-BT, CFD7T-S6, CFD7T-R6-DB, CFD7T-I86, or CFDR7-T

5N. **Alternate Ceiling Damper*** — Optional -Ceiling damper & fan assembly. Max nom area shall be 75 sq in. with the length not to exceed 9-1/4 in. and the width not to exceed 9-3/4 in. Max height of damper shall be 9-7/8 in. Aggregate damper openings shall not exceed 45 sq in. per 100 sq ft of ceiling area. Damper shall be installed in combination with one of the fan models described in, and in accordance with, the manufacturer's installation instructions provided with the damper. A plastic grille shall be installed in accordance with installation instructions.
**DELTA ELECTRONICS INC** — Model SIG-CRD

5O. **Alternate Ceiling Damper*** — Ceiling damper & fan assembly. Max nom area shall be 131 sq in. with the length not to exceed 11-1/16 in. and the width not to exceed 11-7/8 in. Aggregate damper openings shall not exceed 66 sq in. per 100 sq ft of ceiling area. Damper shall be installed in combination with one of the fan models described in, and in accordance with, the manufacturer's installation instructions provided with the damper. A plastic grille shall be installed in accordance with installation instructions.
**DELTA ELECTRONICS INC** — Model SMT-CRD

5P. **Alternate Ceiling Damper*** — Ceiling damper & fan assembly, deep trusses. Max nom area shall be 103 sq in. with the length not to exceed 10-1/8 in. and the width not to exceed 10-1/8 in. Aggregate damper openings shall not exceed 52 sq in. per 100 sq ft of ceiling area. Damper shall be installed in combination with one of the fan models described in, and in accordance with, the manufacturer's installation instructions provided with the damper. A plastic grille shall be installed in accordance with installation instructions.
**PANASONIC CORPORATION, PANASONIC CORPORATION OF NORTH AMERICA** — Model PC-RD05CS

5Q. **Alternate Ceiling Damper*** — Ceiling damper & fan assembly. Max nom area shall be 113 sq in. with the length not to exceed 10-1/8 in. and the width not to exceed 11-1/8 in. Aggregate damper openings shall not exceed 57 sq in. per 100 sq ft of ceiling area. Damper shall be installed in combination with one of the fan models described in, and in accordance with, the manufacturer's installation instructions provided with the damper. A plastic grille shall be installed in accordance with installation instructions.
**BROAN-NUTONE L L C** — Models RD01 and RDH

5R. **Alternate Ceiling Damper*** — Ceiling damper & fan assembly. Max nom area shall be 79 sq in. with the length not to exceed 10 in. and the width not to exceed 7-15/16 in. Aggregate damper openings shall not exceed 40 sq in. per 100 sq ft of ceiling area. Damper shall be installed in combination with one of the fan models described in, and in accordance with, the manufacturer's installation instructions provided with the damper. A metallic grille shall be installed in accordance with installation instructions.
**BROAN-NUTONE L L C** — Models RD01SS and RDHSS

5S. **Alternate Ceiling Damper*** — Max plenum box size nom 19 in. long by 19 in. wide and 11-7/8 in. high fabricated from galv steel. Aggregate damper openings shall not exceed 128 sq in. per 100 sq ft of ceiling area. Damper installed in accordance with the manufacturers installation instructions provided with the damper.
**METAL-FAB INC** — Models MSCD-HC and MRCD-HC

5T. **Alternate Ceiling Damper*** — Ceiling damper & fan assembly. Max nom area shall be 87 sq in. with the length not to exceed 9 in. and the width not to exceed 9-11/16 in. Aggregate damper openings shall not exceed 44 sq in. per 100 sq ft of ceiling area. Damper shall be installed in combination with one of the fan models described in, and in accordance with, the manufacturer's installation instructions provided with the damper. A plastic grille shall be installed in accordance with installation instructions.
**BROAN-NUTONE L L C** — Model RDMWT

5U. **Alternate Ceiling Damper*** — Ceiling damper & fan assembly. Max nom area shall be 87 sq in. with the length not to exceed 9 in. and the width not to exceed 9-11/16 in. Aggregate damper openings shall not exceed 44 sq in. per 100 sq ft of ceiling area. Damper shall be installed in combination with one of the fan models described in, and in accordance with, the manufacturer's installation instructions provided with the damper. A plastic grille shall be installed in accordance with installation instructions.
**BROAN-NUTONE L L C** — Model RDMWT2

5V. **Alternate Ceiling Damper*** — Max nom 21 in. long by 18 in. wide, fabricated from galvanized steel. Plenum box max size nom 21 in. long by 18 in. wide by 14 in. high (inner dimension) fabricated from either galvanized steel or min 1 in. thick Listed Duct Board bearing the UL Listing Marking having a min R Value of 4.3. Installed in accordance with the instructions provided by the manufacturer. Max damper openings not to exceed 180 sq in. per 100 sq ft of ceiling area.
**GREENHECK FAN CORP** — Model CID-1WT

5W. **Alternate Ceiling Damper*** — Max nom 12 in. long by 12 in. wide with an 8 in. diameter damper, fabricated from galvanized steel. Installed in accordance with the instructions provided by the manufacturer. Max damper openings not to exceed 72 sq in. per 100 sq ft of ceiling area.
**GREENHECK FAN CORP** — Model CID-2WT

5X. **Alternate Ceiling Damper*** — (Optional). To be used with Air Duct Item 4.1 For use with min 18 in. deep trusses. Max 12 in. diameter damper and insulated register box assembly. The maximum size of the register box assembly is nom. 20 in. long by 20 in. wide and 4 in. high fabricated from galv steel. The aggregate area of the register opening(s) through the ceiling membrane shall not exceed 128 sq in. per 100 sq ft of ceiling area. Damper assembly installed in accordance with the manufacturers installation instructions.
**AIRE TECHNOLOGIES INC** — Model 571B.

5Y. **Alternate Ceiling Damper*** — Max 20 in. long by 16 in. wide by 4 in. high rectangular damper with plenum box assembly. The maximum outer dimensions of the plenum box assembly is 23-1/2 in. long by 19-1/2 in. wide and 17 in. high fabricated from 6pcf, 1-1/2 to 2 in. thick Knauf Air Duct Board M*. The aggregate area of the register opening(s) through the ceiling membrane shall not exceed 160 sq. in. per 100 sq ft ceiling area. Damper assembly installed in accordance with the manufacturers installation instructions.
**AIRE TECHNOLOGIES INC** — Series 56.

5Z. **Alternate Ceiling Damper*** — Max 14 in. long by 14 in. wide and 18 in. high ceiling damper with boot or box assembly, fabricated from galv steel. The aggregate area of the register opening(s) through the ceiling membrane shall not exceed 98 sq in. per 100 sq ft of ceiling area. Damper assembly installed in accordance with the manufacturers installation instructions.
**AIRE TECHNOLOGIES INC** — Model 51-w/boot.

5AA. **Alternate Ceiling Damper*** — Max nom 11-1/8 in. long by 13-5/8 in. wide, fabricated from galvanized steel. Installed in accordance with the instructions provided by the manufacturer. Max damper openings not to exceed 76 sq in. per 100 sq ft of ceiling area.
**GREENHECK FAN CORP** — Model CID-310WT

5AB. **Alternate Ceiling Damper*** — Max nom 12-3/8 in. long by 14-1/2 in. wide, fabricated from galvanized steel. Installed in accordance with the instructions provided by the manufacturer. Max damper openings not to exceed 90 sq in. per 100 sq ft of ceiling area.
**GREENHECK FAN CORP** — Model CID-320WT

5AC. **Alternate Ceiling Damper*** — Max 12 in. diameter damper within max 15 in. by 15 in. register box with max 12 in. by 12 in. register opening fabricated from galvanized steel. Aggregate area of the register opening(s) through the ceiling membrane shall not exceed 72 sq. in. per 100 sq. ft. of ceiling area. Damper assembly installed in accordance with the manufacturer's installation instructions.
**RUSKIN COMPANY** — Model CFD7T-SR

5AD. **Alternate Ceiling Damper*** — Max 12 in. diameter damper and insulated register box assembly. The maximum size of the register box assembly is nom. 20 in. long by 20 in. wide and 4 in. high fabricated from galv steel. The aggregate area of the register opening(s) through the ceiling membrane shall not exceed 128 sq in. per 100 sq ft of ceiling area. Damper assembly installed in accordance with the manufacturers installation instructions.
**SOUTHWARK METAL MFG CO** — Model 800 w/box

5AE. **Alternate Ceiling Damper*** — Max 20 in. long by 16 in. wide by 4 in. high rectangular damper with plenum box assembly. The maximum outer dimensions of the plenum box assembly are 23-1/2 in. long by 19-1/2 in. wide and 17 in. high fabricated from 6pcf, 1-1/2 to 2 in. thick Knauf Air Duct Board M*. The aggregate area of the register opening(s) through the ceiling membrane shall not exceed 160 sq. in. per 100 sq ft ceiling area. Damper assembly installed in accordance with the manufacturers installation instructions.
**SOUTHWARK METAL MFG CO** — CRD w/08 box

5AF. **Alternate Ceiling Damper*** — Max 14 in. long by 14 in. wide and 18 in. high ceiling damper with boot or box assembly, fabricated from galv steel. The aggregate area of the register opening(s) through the ceiling membrane shall not exceed 98 sq in. per 100 sq ft of ceiling area. Damper assembly installed in accordance with the manufacturers installation instructions.
**SOUTHWARK METAL MFG CO** — Model 500 w/Boot, 510 w/Boot, 500 w/Box or 510 w/Box

5AG. **Alternate Ceiling Damper*** — Maximum 20 in. long by 18 in. wide by 9-1/8 in. high, fabricated from galvanized steel. Plenum box maximum size nom. 21 in. long by 18 in. wide by 16 in. high fabricated from either galvanized steel or Classified Air Duct Materials bearing the UL Class 0 or Class 1 rigid air duct material. Installed in accordance with the instructions provided by the manufacturer. Max damper openings not to exceed 180 sq in. per 100 sq ft of ceiling area.
**NAILOR INDUSTRIES INC** — Types 0751, 0751A, 0756, 0756D, 0757, 0757D, 0757FF, 0757DFF, 0763

**SAFE AIR DOWCO** — 0455, 0455A, 0456, 0456D, 0457, 0457D, 0457-CB, 0463-FB, 0457-EB, 0463-GB, 0463

5AH. **Alternate Ceiling Damper*** — Max nom 10-3/8 in. long by 10-3/8 in. wide, fabricated from galvanized steel. Installed in accordance with the instructions provided by the manufacturer. Max damper openings not to exceed 54 sq in. per 100 sq ft of ceiling area.
**GREENHECK FAN CORP** — Model CID-100WT

6. **Furring Channels** — Resilient channels formed of 25 MSG thick galv steel. Installed perpendicular to the trusses (Item 2), spaced a max of 16 in. OC when no insulation is fitted in the concealed spaced, or a max of 12 in. OC when insulation is fitted in the concealed space, draped over the resilient channel/gypsum board ceiling membrane, or when insulation applied to the underside of the roofing system (Item 1). Channels overlapped 4 in. at splices. Channels oriented opposite at wallboard butt joints (spaced 6 in. OC) as shown in the above illustration. Channels secured to each truss with 1-1/4 in. long Type S screws.

6A. **Steel Framing Members*** — (Optional, Not Shown) — As an alternate to Item 6 - Nom 12 ft (3.66 m) long main runners installed perpendicular to wood trusses and spaced 48 in. (1.22 m) OC. Main runners suspended from trusses with No. 12 SWG galv steel hanger wires reliably secured to the bottom chords of the trusses with screw-attached steel clips and spaced max 48 in. (1.22 m) OC. Nom 4 ft (1.22 m) long cross tees with 1-1/2 in. (38 mm) wide face installed perpendicular to main runners and spaced max 16 in. (406 mm) OC. Cross tees located 4 in. (102 mm) from each side of butted gypsum board end joints. Ends of steel framing members at walls to be supported by galv or painted steel angles or channels with min 1 in. (25 mm) horizontal leg.
**ARMSTRONG WORLD INDUSTRIES INC** — Type DFR-8000

6B. **Armstrong Steel Framing Members*** — (Optional, Not Shown) — As an alternate to Item 6 - For use in corridors or rooms having a maximum width dimension of 14 ft (4.25 m). Steel framing members consist of grid runners, locking angle wall molding and hanger bars. Locking angle wall molding secured to walls with steel nails or screws spaced max 16 in. (610 mm) OC. Slots of locking angle wall molding parallel with hanger bars to be aligned with tabbed cutouts in bottom edge of hanger bars. Hanger bars spaced max 50 in. (1.22 m) OC and suspended with No. 12 AWG steel hanger wires spaced max 48 in. (1.22 m) OC. Adjoining lengths of hanger bar to overlap 12 in. (305 mm) and to

UL Product iQ®

# BXUV.U341 - Fire-resistance Ratings - ANSI/UL 263

Design/System/Construction/Assembly Usage Disclaimer

- Authorities Having Jurisdiction should be consulted in all cases as to the particular requirements covering the installation and use of UL Certified products, equipment, system, devices, and materials.
- Authorities Having Jurisdiction should be consulted before construction.
- Fire resistance assemblies and products are developed by the design submitter and have been investigated by UL for compliance with applicable requirements. The published information cannot always address every construction nuance encountered in the field.
- When field issues arise, it is recommended the first contact for assistance be the technical service staff provided by the product manufacturer noted for the design. Users of fire resistance assemblies are advised to consult the general Guide Information for each product category and each group of assemblies. The Guide Information includes specifics concerning alternate materials and alternate methods of construction.
- Only products which bear UL's Mark are considered Certified.

## Fire-resistance Ratings - ANSI/UL 263

BXUV - Fire Resistance Ratings - ANSI/UL 263 Certified for United States

BXUV7 - Fire Resistance Ratings - CAN/ULC-S101 Certified for Canada

See General Information for Fire-resistance Ratings - ANSI/UL 263 Certified for United States
Design Criteria and Allowable Variances

See General Information for Fire-resistance Ratings - CAN/ULC-S101 Certified for Canada
Design Criteria and Allowable Variances

Design No. **U341**

October 7, 2022

**Bearing Wall Rating — 1 Hr.**
**Finish Rating — Min 20 min.**
**This design was evaluated using a load design method other than the Limit States Design Method (e.g., Working Stress Design Method). For jurisdictions employing the Limit States Design Method, such as Canada, a load restriction factor shall be used — See Guide BXUV or BXUV7**

*** Indicates such products shall bear the UL or cUL Certification Mark for jurisdictions employing the UL or cUL Certification (such as Canada), respectively.**

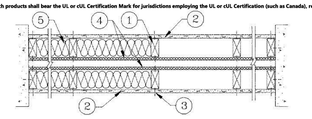


**CERTAINTEED GYPSUM INC** — Type LGFCSA (finish rating 21 min), Type LGFC2A, Type LGFC-C/A, Type LGFC-WO, Type LGLUX

3. **Joints and Nailheads —** Gypsum board joints of outer layer covered with tape and joint compound. Nail heads of outer layer covered with joint compound. As an alternate, nom 3/32 in. thick gypsum veneer plaster may be applied to the entire surface of Classified veneer baseboard with joints reinforced with paper tape.

4. **Sheathing —** (Optional) — Septum may be sheathed with min 7/16 in. thick wood structural panels min grade "C-D" or "Sheathing" or min 1/2 in. thick **Mineral and Fiber Boards***.
See **Mineral and Fiber Boards** (DJXZ) category for names of Classified companies.

5. **Batts and Blankets* —** 3-1/2 in. max thickness glass or mineral fiber batt insulation. **Optional** when sheathing (item 4) is used on both halves of wall.
See **Batts and Blankets** (BZJZ) category for list of Classified companies.

5A. **Fiber, Sprayed* —** As an alternate to Batts and Blankets (Item 5) — Spray applied cellulose material. The fiber is applied with water to completely fill the enclosed cavity in accordance with the application instructions supplied with the product with a nominal dry density of 2.7 lb/ft$^3$. Alternate Application Method: The fiber is applied without water or adhesive at a nominal dry density of 3.5 lb/ft$^3$, in accordance with the application instructions supplied with the product.

**U S GREENFIBER L L C** — INSTI3, INSTI4S, INSTI5LD and SANCTUARY for use with wet or dry application. INSS15LD, INSS41LD, INSTI5, INSTI6LD, and INSTI7LD are to be used for dry application only.

5B. **Fiber, Sprayed* —** As an alternate to Batts and Blankets (Item 5) when Sheathing (Item 4) is used on both halves of wall - Spray applied cellulose insulation material. The fiber is applied with water to interior surfaces in accordance with the application instructions supplied with the product. Applied to completely fill the enclosed cavity. Minimum dry density of 4.3 pounds per cubic ft.
**NU-WOOL CO INC** — Cellulose Insulation

5C. **Batts and Blankets* —** (Required for use with Wall and Partition Facings and Accessories, Item 2A. Use of Sheathing, Item 4, does not nullify requirement of Item 5C for use with Item 2A) — Glass fiber insulation, nom 3-1/2 in. thick, min. density of 0.80 pcf, with a flame spread of 25 or less and a smoke developed of 50 or less, friction-fitted to completely fill the stud cavities. See Batts and Blankets Category (BKNV) for names of manufacturers.

5D. **Fiber, Sprayed* —** As an alternate to Batts and Blankets (Item 5) and Item 5A when Sheathing (Item 4) is used on both halves of wall - Spray applied cellulose fiber. The fiber is applied with water to completely fill the enclosed cavity in accordance with the application instructions supplied with the product. The minimum dry density shall be 4.30 lbs/ft$^3$.
**INTERNATIONAL CELLULOSE CORP** — Cellur-Ri.

5E. **Fiber, Sprayed* —** As an alternate to Batts and Blankets (Item 5) - Spray-applied cellulose material. The fiber is applied with water to completely fill the enclosed cavity in accordance with the application instructions supplied with the product. To facilitate the installation of the material, soy thru, woven or non-woven netting may be attached by any means possible to the outer face the studs. The material shall reach equilibrium moisture content before the installation of materials on either face of the studs. The minimum dry density shall be 5.79 lbs/ft$^3$.
**APPLEGATE HOLDINGS L L C** — Applegate Advanced Stabilized Cellulose Insulation

6. **Steel Framing Members* —** (Optional, Not Shown) — Furring channels and Steel Framing Members as described below:
A. **Furring Channels —** Formed of No. 25 MSG galv steel, 2-9/16 in. or 2-23/32 in. wide by 7/8 in. deep, spaced 24 in. OC perpendicular to studs. Channels secured to studs as described in Item b. Ends of adjoining channels are overlapped 6 in. and tied together with double strand of No. 18 SWG galv steel wire near each end of overlap. As an alternate, ends of adjoining channels may be overlapped 6 in. and secured together with two self-tapping #6 framing screws, min. 7/16 in. long at the midpoint of the overlap, with one screw on each flange of the channel. Wallboard attached to furring channels as described in Item 2.

B. **Steel Framing Members* —** Used to attach furring channels (Item a) to studs (Item 1) . Clips spaced 48 in. OC., and secured to studs with No. 8 x 2-1/2 in. coarse drywall screw through the center grommet. Furring channels are friction fitted into clips. RSIC-1 clip for use with 2-9/16 in. wide furring channels, RSIC-1 (2.75) clip for use with 2-23/32 in. wide furring channels.
**PAC INTERNATIONAL L L C** — Types RSIC-1, RSIC-1 (2.75).

6A. **Steel Framing Members* —** (Optional, Not Shown, As an alternate to Item 6) — Furring channels and Steel Framing Members as described below:
a. **Furring Channels —** Formed of No. 25 MSG galv steel. 2-3/8 in. wide by 7/8 in. deep, spaced 24 in. OC perpendicular to studs. Channels secured to studs as described in Item b. Ends of adjoining channels are overlapped 6 in. and tied together with double strand of No. 18 SWG galv steel wire near each end of overlap. As an alternate, ends of adjoining channels may be overlapped 6 in. and secured together with two self-tapping #6 framing screws, min. 7/16 in. long at the midpoint of the overlap, with one screw on each flange of the channel. Gypsum board attached to furring channels as described in Item 2.

b. **Steel Framing Members* —** Used to attach furring channels (Item a) to studs. Clips spaced 48 in. OC. Genie clips secured to studs with No. 8 x 1-1/2 in. coarse drywall screw through the center hole. Furring channels are friction fitted into clips.
**PUTEQ INC** — Type Genie Clip

6B. **Steel Framing Members* —** (Optional, Not Shown, As an alternate to Item 6) — Furring channels and Steel Framing Members as described below:
a. **Furring Channels —** Formed of No. 25 MSG galv steel. Spaced 24 in. OC perpendicular to studs. Channels secured to studs as described in Item b. Ends of adjoining channels overlapped 6 in. and tied together with double strand of No. 18 GWG galvanized steel wire. Gypsum board attached to furring channels as described in Item 2.

b. **Steel Framing Members* —** Used to attach furring channels (Item a) to studs. Clips spaced 48 in. OC., and secured to studs with No. 8 x 2-1/2 in. coarse drywall screw through the center grommet. Furring channels are friction fitted into clips.
**STUDCO BUILDING SYSTEMS** — RESILMOUNT Sound Isolation Clips - Type A2376

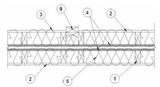


HORIZONTAL SECTION

1. **Wood Studs —** Nom 2 by 4 in., spaced 24 in. OC max. Cross braced at mid-height and effectively firestopped at top and bottom of wall. No min. air space between stud rows except to accommodate attachment of sheathing, where required. See Items 4 and 5.

2. **Gypsum Board* — Any 5/8 in. thick UL Classified Gypsum Board that is eligible for use in Design Nos. U501, GS12 or U305.** Nom 5/8 in. thick 4 ft wide. Gypsum board applied horizontally or vertically, unless specified below, and nailed to studs and bearing plates 7 in. OC with 6d cement coated nails, 1-7/8 in. long, 0.0915 in. shank diam and 1/4 in. diam head. As an alternate, No. 6 bugle head drywall screws, 1-7/8 in. long, may be substituted for the 6d cement coated nails.
When **Steel Framing Members*** (Item 6 or any alternate clip) are used, wallboard attached to furring channels with 1 in. long Type S bugle-head steel screws spaced 12 in. OC.

When used in widths other than 48 in., gypsum board to be installed horizontally.
**AMERICAN GYPSUM CO** (View Classification) — CONXR14196

**BEIJING NEW BUILDING MATERIALS PUBLIC LTD CO** (View Classification) — CONXR19374

**CABOT MANUFACTURING ULC** (View Classification) — CONXJ25370

**CERTAINTEED GYPSUM INC** (View Classification) — CONXJ13660

**CGC INC** (View Classification) — CONXJ19751

**CERTAINTEED GYPSUM INC** (View Classification) — CONXJ19482

**GEORGIA-PACIFIC GYPSUM L L C** (View Classification) — CONXJ12717

**LOADMASTER SYSTEMS INC** (View Classification) — CONXJ11809

**NATIONAL GYPSUM CO** (View Classification) — CONXJ13501

**PABCO BUILDING PRODUCTS L L C, DBA PABCO GYPSUM** (View Classification) — CONXJ17094

**PANEL REY S A** (View Classification) — CONXJ21796

**SIAM GYPSUM INDUSTRY (SARABURI) CO LTD** (View Classification) — CONXJ19262

**THAI GYPSUM PRODUCTS PCL** (View Classification) — CONXJ27517

**UNITED STATES GYPSUM CO** (View Classification) — CONXJ13119

**USG BORAL DRYWALL SFZ LLC** (View Classification) — CONXJ18438

**USG BORAL DRYWALL SFZ LLC** (View Classification) — CONXJ18438

**USG MEXICO S A DE C V** (View Classification) — CONXJ16089

2A. **Gypsum Board* —** (As an alternate to Item 2, not shown) — Nominal 5/8 in. thick, 4 ft wide panels, applied vertically to studs and bearing plates on one side of the assembly with 1-5/8 in. long Type S screws spaced 12 in. OC at perimeter of panels and 8 in. OC in the field. Horizontal joints of vertically applied panels need not be backed by studs. Panel joints covered with paper tape and two layers of joint compound. Screwheads covered with two layers of joint compound. Batts and Blankets placed in stud cavity as described in Item 5C. Not evaluated for use with Steel Framing Members, Furring Channels or Fiber, Sprayed.
**PABCO BUILDING PRODUCTS L L C, DBA PABCO GYPSUM** — Type Quietrock QR-550 (finish rating 23 min).

2B. **Gypsum Board* —** (As an alternate to Item 2, not shown) — Any 5/8 in. thick gypsum panels that are eligible for use in Design Nos. U501, GS12 or U305, supplied by the Classified companies listed below shown in the **Gypsum Board*** (CKNX) category. Applied horizontally or vertically and attached to studs and bearing plates with 1-1/4 in. long Type W coarse thread gypsum panel steel screws spaced a max 8 in. OC, with last screw 1 in. from edge of board. When used in widths other than 48 in., gypsum board to be installed horizontally.
**UNITED STATES GYPSUM CO**

**USG BORAL DRYWALL SFZ LLC**

**USG MEXICO S A DE C V**

2C. **Gypsum Board* —** (As an alternate to Item 2, Not Shown) — 5/8 in. thick gypsum panels applied horizontally or vertically and attached to studs and bearing plates with 1-1/4 in. long Type W coarse thread gypsum panel steel screws spaced a max 8 in. OC, with last screw 1 in. from edge of board. When used in widths other than 48 in., gypsum board to be installed horizontally.
**AMERICAN GYPSUM CO** — Types AGX-1, W-Glass, AG-C, LightRoc

**CERTAINTEED GYPSUM INC** — Type C or Type R-1

**NATIONAL GYPSUM CO** — Type FSX, Type FSX-G, Type FSW, Type FSW-3, Type FSW-5, Type FSW-G, Type FSX-C, Type FSW-C, Type FSWS-C, Type FSW-R, Type FSL

**THAI GYPSUM PRODUCTS PCL** — Type C or Type X

2D. **Gypsum Board* —** (As an alternate to Items 2, 2A, 2B and 2C) — 5/8 in. thick gypsum panels, with square edges, applied either horizontally or vertically. Gypsum panels fastened to framing with 1-1/4 in. long Type W coarse thread gypsum panel steel screws spaced a max 8 in. OC, with last 2 screws 1 and 4 in. from edge of board or nailed as described in Item 2. When used in widths of other than 48 in., gypsum boards are to be installed horizontally.
**GEORGIA-PACIFIC GYPSUM L L C** — GreenGlass Type X, Type DGG.

2E. **Gypsum Board* —** (As an alternate to Items 2 through 2D) — 5/8 in. thick, 4 ft. wide, paper surfaced applied vertically only and secured as described in Item 2.
**GEORGIA-PACIFIC GYPSUM L L C** — Type X ComfortGuard Sound Deadening Gypsum Board.

2F. **Gypsum Board* —** (As an alternate to Items 2 through 2E) - Installed as described in Item 2, 5/8 in. thick, 4 ft. wide, paper surfaced, applied vertically only and fastened to the studs and plates with 6d cement coated nails 1-7/8 in. long, 0.0915 in. shank diam and 1/4 in. diam heads, 7 in. OC. Not for use with Item #6.
**NATIONAL GYPSUM CO** — Type SBNB

2G. **Gypsum Board* —** (As an alternate to Items 2 through 2F) — Nominal 5/8 in. thick, 4 ft wide panels, applied vertically and secured as described in Item 2.
**PABCO BUILDING PRODUCTS L L C, DBA PABCO GYPSUM** — Types Quietrock 05.

2H. **Gypsum Board* —** (As an alternate to Items 2 through 2G) — Installed as described in Item 2, 5/8 in. thick, 4 ft. wide, paper surfaced, applied vertically or horizontally fastened to the studs and plates with 1-1/4 in. long Type W coarse thread gypsum panel steel screws spaced a max 12 in. OC.
**CERTAINTEED GYPSUM INC** — Type SilentFX

2I. **Wall and Partition Facings and Accessories* —** (As an alternate to Items 2 through 2H) — Nominal 5/8 in. thick, 4 ft wide panels, applied vertically and secured as described in Item 2.
**PABCO BUILDING PRODUCTS L L C, DBA PABCO GYPSUM** — Type Quietrock 527.

2J. **Gypsum Board* —** (As an alternate to 5/8 in. Type FSW in Item 2) — 2 layers nom. 5/16 in. thick gypsum panels applied vertically or horizontally. Horizontal joints on the same side need not be staggered. Inner layer attached with fasteners, as described in item 2, spaced 24 in. OC. Outer layer attached per Item 2.
**NATIONAL GYPSUM CO** — Type FSW.

2K. **Gypsum Board* —** (As an alternate to Item 2) — 5/8 in. thick gypsum panels, with beveled, square, or tapered edges, applied either horizontally or vertically. Gypsum panels fastened to framing with 1-1/4 in. long Type W coarse thread gypsum panel steel screws spaced a maximum 10 in. OC with the last two screws 4 and 1 in. from the edges of the board. When used in widths other than 48 in., gypsum panels are to be installed horizontally.

6C. **Steel Framing Members* —** (Optional, Not Shown, As an alternate to Item 6) — Furring channels and Steel Framing Members as described below:
A. **Furring Channels —** Formed of No. 25 MSG galv steel. Spaced 24 in. OC perpendicular to studs. Channels secured to studs as described in Item 6Cb. Ends of adjoining channels overlapped 6 in. and tied together with double strand of No. 18 AWG galvanized steel wire. Gypsum board attached to furring channels as described in Item 2.

B. **Steel Framing Members* —** Used to attach furring channels (Item 6CA) to studs. Clips spaced 48 in. OC., and secured to studs with No. 8 x 2-1/2 in. coarse drywall screw through the center hole. Furring channels are friction fitted into clips.
**RBGUPOL AMERICA** — Type SonusClip

6D. **Steel Framing Members* —** (Optional, Not Shown, As an alternate to Item 6) — Resilient channels and Steel Framing Members as described below:
a. **Resilient Channels —** Formed of No. 25 MSG galv steel, spaced 24 in. OC, and perpendicular to studs. Channels secured to studs as described in Item b. Ends of adjoining channels overlapped 6 in. and secured in place with two No. 8 15 x 1/2 in. Philips Modified Truss screws spaced 2-1/2 in. from the center of the overlap. Gypsum board attached to resilient channels as described in Item 2.

b. **Steel Framing Members* —** Used to attach resilient channels (Item 6Da) to studs. Clips spaced 48 in. OC., and secured to studs with No. 8 x 2-1/2 in. coarse drywall screw through the center hole. Resilient channels are secured to clips with one No. 10 x 1/2 in. pan-head self-drilling screw.
**KEENE BUILDING PRODUCTS CO INC** — Type RC+ Assurance Clip

6E. **Steel Framing Members* —** (Optional, Not Shown) — Resilient channels and Steel Framing Members as described below:
a. **Resilient Channels —**Formed of No. 25 MSG galv steel, spaced 24 in. OC, and perpendicular to studs. Channels secured to studs as described in Item b. Gypsum board attached to resilient channels as described in Item 2.

b. **Steel Framing Members* -** Used to attach resilient channels to wall studs. A resilient sound isolation accessory shall be used at each attachment point of the resilient channels to the studs. Channel ends butted and centered under the structural members and attached with one accessory at each end. Additional accessories used to hold resilient channels that support the gypsum board end joints. The accessory envelops the mounting edge of the resilient channel. The accessory and resilient channel are fastened to the studs with the screws supplied with the accessory and per the accessory manufacturer's installation instructions.

**PAC INTERNATIONAL L L C** — Type RC- 1 Boost

6F. **Steel Framing Members* —** (Optional, Not Shown, As an alternate to Item 6) — Furring channels and Steel Framing Members as described below:
a. **Furring Channels —** Formed of No. 25 MSG galv steel. 2-23/32 in. wide by 7/8 in. deep, spaced 24 in. OC perpendicular to studs. Channels secured to studs as described in Item b. Ends of adjoining channels are overlapped 6 in. and tied together with double strand of No. 18 SWG galv steel wire near each end of overlap. As an alternate, ends of adjoining channels may be overlapped 6 in. and secured together with two self-tapping #6 framing screws, min. 7/16 in. long at the midpoint of the overlap, with one screw on each flange of the channel. Gypsum board attached to furring channels as described in Item 2.

b. **Steel Framing Members* —** Used to attach furring channels (Item 6Fa) to studs. Clips spaced maximum 48 in. OC. Clips secured to studs with No. 8 x 2-1/2 in. coarse drywall screw through the center grommet. Furring channels are friction fitted into clips.

**CLARKDIETRICH BUILDING SYSTEMS** — Type ClarkDietrich Sound Clip

7. **Wall and Partition Facings and Accessories* —** (Optional, Not shown) — Nominal 1/2 in. thick, 4 ft wide panels, for optional use as an additional layer on one or both sides of the assembly. Panels attached in accordance with manufacturer's recommendations. When the QR-500 or QR-510 panel is installed between the wood framing and the UL Classified gypsum board, the required UL Classified gypsum board layer(s) is/are to be installed as indicated as to fastener type and spacing, except that the required fastener length shall be increased by a minimum of 1/2 in. Not evaluated or intended as a substitute for the required layer(s) of UL Classified Gypsum Board.
**PABCO BUILDING PRODUCTS L L C, DBA PABCO GYPSUM** — Type Quietrock QR-500 and QR-510

8. **Mineral and Fiber Board* —** (Optional, Not Shown) — For optional use as an additional layer on one or both sides of wall. Nom 1/2 in. thick, 4 ft wide with long dimension parallel and centered over studs. Attached to framing as described in Item 2. The required UL Classified gypsum board layer(s) is/are to be installed as indicated as to fastener type and spacing, except that the required fastener length shall be increased by a minimum of 1/2 in. Not evaluated or intended as a substitute for the required layer(s) of UL Classified Gypsum Board.
**HOMASOTE CO** — Homasote Type 440-32

9. **Non-Bearing Wall Partition intersection —** (Optional) — Two nominal 2 by 4 in. stud or nominal 2 by 6 in. stud nailed together with two 3in. long 10d nails spaced a max. 16 in. OC, vertically and fastened to one side of the minimum 2 by 4 in. stud with 3 in. long 10d nails spaced a max. 16 in. OC, vertically. Intersection between partition wood studs are to be flush with the 2 by 4 in. studs. The wall partition wood studs are to be framed by with a second 2 by 4 in. wood stud fastened with 3 in. long 10d nails spaced a max. 16 in. OC. vertically. Maximum one non-bearing wall partition intersection per stud cavity. Non-bearing wall partition stud depth shall be at a minimum equal to the depth of the bearing wall.

**(Optional, Not Shown) Alternate Construction For Use On One Side Of The Wall.**

10. **Mineral and Fiber Board* —** For use with Items 10A-10D) —Nom 1/2 in. thick, 4 ft wide with long dimension parallel and centered over studs. Attached to framing with minimum 1-3/8 in. long ring shanked nails or 1-1/4 in. long Type W steel screws, spaced 12 in. OC along board edges and 24 in. OC in field of board along intermediate framing. Not evaluated or intended as a substitute for the required layer(s) of UL Classified Gypsum Board.
**HOMASOTE CO** — Homasote Type 440-32

10A. **Glass Fiber Insulation —** (For use with Item 10) — 3-1/2 in. thick glass fiber batts bearing the UL Classification Marking as to Surface Burning and/or Fire Resistance, placed to fill the interior of the wall. See Batts and Blankets (BKNV or BZJZ) categories for names of Classified companies.

10B. **Batts and Blankets* —** (As an alternate to Item 10B, For use with Item 10), 3 in. thick mineral wool batts, placed to fill interior of wall, attached to the 3-1/2 in. face of the studs with staples placed 24 in. OC.
**THERMAFIBER INC** — Type SAFB, SAFB FF

10C. **Adhesive —** (For use with Item 10) — Construction grade adhesive applied in vertical, serpentine, nominal 3/8 in. wide beads down the length of both vertical edges of Mineral and Fiber Board (Item 14A).

10D. **Gypsum Board* —** (For use with Item 10) — 5/8 in. thick, 4 ft wide, applied vertically over Mineral and Fiber Board (Item 14A) with vertical joints located anywhere over stud cavities. Secured to mineral and fiber boards with 1-1/2 in. Type G Screws spaced 8 in. OC along edges of each vertical joint and 12 in. OC in intermediate field of the Mineral and Fiber Board (Item 10). Secured to outermost studs and bearing plates with 2 in. long Type S screws spaced 8 in. OC. Gypsum Board joints covered with paper tape and joint compound. Screw heads covered with joint compound. Finish Rating 30 Min.
**AMERICAN GYPSUM CO** — Type AG-C

**CERTAINTEED GYPSUM INC** — Type C

**CERTAINTEED GYPSUM INC** — Type LGFC-C/A

**GEORGIA-PACIFIC GYPSUM L L C** — Types S, DAPC, TG-C

**NATIONAL GYPSUM CO** — Types FSK-C, FSW-C

**PABCO BUILDING PRODUCTS L L C, DBA PABCO GYPSUM** — Type PG-C

**PANEL REY S A** — Type PRC

**THAI GYPSUM PRODUCTS PCL** — Type C

**UNITED STATES GYPSUM CO** — Type CTypes C, IP-X2, IPC-AR

**USG BORAL DRYWALL SFZ LLC** — Type C

**USG MEXICO S A DE C V** — Types C, IP-X2, IPC-AR

*** Indicates such products shall bear the UL or cUL Certification Mark for jurisdictions employing the UL or cUL Certification (such as Canada), respectively.**

Last Updated on 2022-10-07

The appearance of a company's name or product in this database does not in itself assure that products so identified have been manufactured under UL Solutions' Follow - Up Service. Only those products bearing the UL Mark should be considered to be Certified and covered under UL Solutions' Follow - Up Service. Always look for the Mark on the product.

UL Solutions permits the reproduction of the material contained in Product iQ subject to the following conditions: 1. The Guide Information, Assemblies, Constructions, Designs, Systems, and/or Certifications (files) must be presented in their entirety and in a non-misleading manner, without any manipulation of the data (or drawings). 2. The statement "Reprinted from Product iQ with permission from UL Solutions" must appear adjacent to the extracted material. In addition, the reprinted material must include a copyright notice in the following format: "©2022 UL LLC."

ALL REPORTS, PLANS, SPECIFICATIONS AND COMPUTER FILES RELATING TO THIS PROJECT ARE THE PROPERTY OF THE MARTIN ARCHITECTURAL GROUP. THE MARTIN ARCHITECTURAL GROUP RETAINS ALL COMMON LAW, STATUTE AND OTHER RESERVED RIGHTS INCLUDING THE COPYRIGHT THERETO. REPRODUCTION OF THE MATERIAL HEREIN OR SUBSTANTIAL USE WITHOUT WRITTEN PERMISSION OF THE MARTIN ARCHITECTURAL GROUP VIOLATES THE COPYRIGHT LAWS OF THE UNITED STATES AND WILL BE SUBJECT TO LEGAL PROSECUTION.
©2022, The Martin Architectural Group, P.C.

NIC

REGISTERED ARCHITECT COMMONWEALTH OF PENNSYLVANIA DREW ROMANIC No. 049070

Professi
I hereby prepare laws of

Professi License Expirati

THE MARTIN ARCHITECTURAL GROUP, P.C.
ARCHITECTS AND LAND PLANNERS
A PROFESSIONAL CORPORATION
240 NORTH 22ND STREET, PHILADELPHIA, PA, 19103
P (215) 665-1600 F (215) 561-5064

| | |
|---|---|
| P.A.: | DREW ROMANIC |
| P.M.: | JASON DECAMPLI |
| DRAWN BY: | Author |
| PROJECT NO: | 1362-12 |

| NO. | REVISION | DATE |
|---|---|---|
| 1 | PERMIT SET | 12/20/22 |

FIRE RATED ASSEMBLIES
**Granite Run Apartment 02**
MIDDLETOWN TOWNSHIP, PA

SCALE:
DATE: 11/08/22

**A5.13**

©2022, The Martin Architectural Group, P.C.

UL Product iQ®

# BXUVU305 - Fire-resistance Ratings - ANSI/UL 263

Design/System/Construction/Assembly Usage Disclaimer

- Authorities Having Jurisdiction should be consulted in all cases as to the particular requirements covering the installation and use of UL Certified products, equipment, system, devices, and materials.
- Authorities Having Jurisdiction should be consulted before construction.
- Fire resistance assemblies and products are developed by the design submitter and have been investigated by UL for compliance with applicable requirements. The published information cannot always address every construction nuance encountered in the field.
- When field issues arise, it is recommended the first contact for assistance be the technical service staff provided by the product manufacturer noted for the design. Users of fire resistance assemblies are advised to consult the general Guide Information for each product category and each group of assemblies. The Guide Information includes specifics concerning alternate materials and alternate methods of construction.
- Only products which bear UL's Mark are considered Certified.

## Fire-resistance Ratings - ANSI/UL 263

BXUV - Fire Resistance Ratings - ANSI/UL 263 Certified for United States

BXUV7 - Fire Resistance Ratings - CAN/ULC-S101 Certified for Canada

See General Information for Fire-resistance Ratings - ANSI/UL 263 Certified for United States
Design Criteria and Allowable Variances

See General Information for Fire-resistance Ratings - CAN/ULC-S101 Certified for Canada
Design Criteria and Allowable Variances

Design No. **U305**

September 5, 2022

**Bearing Wall Rating — 1 Hr**
**Finish Rating — See Items 3, 3A, 3D, 3E, 3F, 3G, 3H, 3J and 3L.**
**STC Rating - 56 (See Item 9)**
**This design was evaluated using a load design method other than the Limit States Design Method (e.g., Working Stress Design Method). For jurisdictions employing the Limit States Design Method, such as Canada, a load restriction factor shall be used — See Guide BXUV or BXUV7**

*** Indicates such products shall bear the UL or cUL Certification Mark for jurisdictions employing the UL or cUL Certification (such as Canada), respectively.**

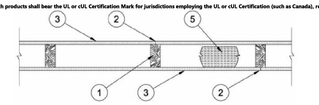


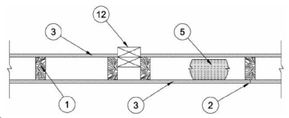


1. **Wood Studs —** Nom 2 by 4 in. spaced 16 in. OC max, effectively firestopped.

2. **Joints and Nail-Heads —** Joints covered with joint compound and paper tape. Joint compound and paper tape may be omitted when square edge boards are used. As an alternate, nom 3/32 in. thick gypsum veneer plaster may be applied to the entire surface of Classified veneer baseboard with the joints reinforced with paper tape. Nailheads exposed or covered with joint compound.

3. **Gypsum Board* —** 5/8 in. thick paper or vinyl surfaced, with beveled, square, or tapered edges, applied either horizontally or vertically. Gypsum panels nailed 7 in. OC with 6d cement coated nails 1-7/8 in. long, 0.0915 in. shank diam and 15/64 in. diam heads. When used in widths other than 48 in., gypsum panels are to be installed horizontally. For an alternate method of attachment of gypsum panels, refer to Items 6 through 6F, **Steel Framing Members***.
When Items 6, 6B, 6C, 6D, 6E, or 6F, **Steel Framing Members***, are used, gypsum panels attached to furring channels with 1 in. long Type S bugle-head steel screws spaced 12 in. OC.

When Item 6A, **Steel Framing Members***, is used, two layers of gypsum panels attached to furring channels. Base layer attached to furring channels with 1 in. long Type S bugle-head steel screws spaced 12 in. OC. Face layer attached to furring channels with 1-5/8 in. long Type S bugle-head steel screws spaced 12 in. OC. All joints in face layers staggered with joints in base layers. One layer of gypsum board attached to opposite side of wood stud without furring channels as described in Item 3.

When Item 7, resilient channels are used, 5/8 in. thick, 4 ft wide gypsum panels applied vertically. Screw attached furring channels with 1 in. long, self-drilling, self-tapping Type S or S-12 steel screws spaced 8 in. OC, vertical joints located midway between studs.

**AMERICAN GYPSUM CO** — Types AGX-1(finish rating 23 min.), W-Glass (finish rating 23 min.), Type AGX-11 (finish rating 26 min), Type AGX-12 (finish rating 22 min), Type LightRoc (finish rating 23 min.) or Type AG-C

**BEIJING NEW BUILDING MATERIALS PUBLIC LTD CO** — Type DBX-1 (finish rating 24 min)

**CABOT MANUFACTURING ULC** — Type X (finish rating 22 min), 5/8 Type X, Moisture Resistant Type X, Gypsum Sheathing Type X, Mold & Mildew Resistant Type X and Mold & Mildew Resistant AR Type X, Type Blueglass Exterior Sheathing

**CERTAINTEED GYPSUM INC** — Type C, Type X-1 (finish rating 26 min) Type EGRG or GlasRoc (finish rating 23 min), GlasRoc-2, Type Habito (finish rating 26 min), Type UNITX (finish rating 18 min), Type LGFCSA (finish rating 34 min), Type LGFC2A, Type LGFC-C/A, Type LGFC-WO, Type LGLUX (finish rating 21 min), Type CLUX (finish rating 24 min)

**CGC INC** — Type AR (finish rating 24 min), Type C (finish rating 24 min), Type IP-AR (finish rating 24 min), Type IPC-AR (finish rating 24 min), Type IP-X1 (finish rating 24 min), Type IP-X2 (finish rating 24 min), Type SCX (finish rating 24 min), Type SHX (finish rating 24 min), Type ULIX (finish rating 22 min), Type WRC (finish rating 24 min), Type WRX (finish rating 24 min), Type ULCX (finish rating 20 min)

**GEORGIA-PACIFIC GYPSUM L L C** — Type S (finish rating 26 min), Type E (finish rating 23 min), Type 9 (finish rating 26 min), Type C (finish rating 26 min), Type DGG (finish rating 20 min), Type GPXS1 (finish rating 20 min), Type GPFS2 (finish rating 20 min), Type GPF56 (finish rating 26 min), Type DS, Type DAT, Type DD (finish rating 20 min), Type DA, Type DAPC, Type LS (finish rating 23 min), Type X, Veneer Plaster Base - Type X, Water Rated - Type X, Sheathing - Type X, Soffit - Type X, Type LWX (finish rating 22 min), Veneer Plaster Base Type LWX (finish rating 22 min), Water Rated-Type LWX (finish rating 22 min), Sheathing Type LWX (finish rating 22 min), Soffit-Type LWX (finish rating 22 min), Type DGLW (finish rating 22 min), Water Rated-Type DGLW (finish rating 22 min), Sheathing Type DGLW (finish rating 22 min), Soffit-Type DGLW (finish rating 22 min), Type LWIX (finish rating 22 min), Type LWIXX (finish rating 22 min), Veneer Plaster Base - Type LWDX (finish rating 22 min), Water Rated - Type LWDX (finish rating 22 min), Sheathing - Type LWDX (finish rating 22 min), Soffit - Type LWDX (finish rating 22 min), Type DGLZW (finish rating 22 min), Water Rated - Type DGLZW (finish rating 22 min), Sheathing - Type DGLZW (finish rating 22 min)

**NATIONAL GYPSUM CO** — Type FSK (finish rating 20 min), Type FSK-G (finish rating 20 min), Type FSW (finish rating 20 min), Type FSW-2 (finish rating 24 min), Type FSW-3 (finish rating 20 min), Type FSW-5 (finish rating 22 min), Type FSW-G (finish rating 20 min), Type FSX-C (finish rating 20 min), Type FSW-C (finish rating 20 min), Type FSWS-C, Type FSW-R (finish rating 20 min), Type FSL (finish rating 24 min), Type FSW-B, Type FSLX (finish rating 21 min), Type RSX (finish rating 26 min).

**NATIONAL GYPSUM CO** — Riyadh, Saudi Arabia — Type FR, or WR.

**PABCO BUILDING PRODUCTS L L C, DBA PABCO GYPSUM** — Types C, PG-2 (finish rating 20 min), PG-3 (finish rating 20 min), Types PG-5W, PG-5W (finish rating 20 min), Type PG-4 (finish rating 20 min), Type PG-6 (finish rating 23 min), Types PG-5WS, PGS-5WS, PGS-WRS (finish rating 20 min), Types PG-5, PG-9 (finish rating 26 min), PG-11 PG-13 (Nails increased to 2 in.), Type PG-C or PG (finish rating 26 min)

**PANEL REY S A** — Type ARX, GREX, GRIX, PRX, PRC, PRC2; Types RHX, Guard Rey, MCIX, ITX (finish rating 22 min), PRX2 (finish rating 21 min)

**SIAM GYPSUM INDUSTRY (SARABURI) CO LTD** — Type EX-1 (finish rating 26 min)

**THAI GYPSUM PRODUCTS PCL** — Type C, Type X (finish rating 26 min)

**UNITED STATES GYPSUM CO** — Type AR (finish rating 24 min), Type C (finish rating 24 min), Type FRX-G (finish rating 29 min), Type IP-AR (finish rating 24 min), Type IPC-AR (finish rating 24 min), Type IP-X1 (finish rating 24 min), Type IP-X2 (finish rating 24 min), Type SHX (finish rating 24 min), Type SCX (finish rating 24 min), Type SGX (finish rating 24 min), Type ULIX (finish rating 22 min), Type WRX (finish rating 24 min), Type WRC (finish rating 24 min), Type ULIX (finish rating 20 min)

**USG BORAL DRYWALL SFZ LLC** — Type SGX (finish rating 24 min).

**USG MEXICO S A DE C V** — Type AR (finish rating 24 min), Type C (finish rating 24 min), Type WRX (finish rating 24 min), Type WRC (finish rating 24 min), Type IP-X1 (finish rating 24 min), Type IP-X2 (finish rating 24 min), Type SHX (finish rating 24 min), SCX (finish rating 24 min), Type IP-AR (finish rating 24 min), Type IPC-AR (finish rating 24 min), Type ULX (finish rating 22 min)

3A. **Gypsum Board* —** (As an alternate to Item 3) — 5/8 in. thick gypsum panels, with beveled, square, or tapered edges, applied either horizontally or vertically. Gypsum panels fastened to framing with 1-1/4 in. long Type W coarse thread gypsum panel steel screws spaced a max 8 in. OC, with last screw 1 in. from edge of board. When used in widths of other than 48 in., gypsum boards are to be installed horizontally.

**AMERICAN GYPSUM CO** — Types AGX-1 (finish rating 25 min.), W-Glass (finish rating 25 min.), AG-C (finish rating 25 min.), LightRoc (finish rating 25 min.)

**CERTAINTEED GYPSUM INC** — Type C, Type X-1 (finish rating 26 min), Type EGRG or GlasRoc.

**CGC INC** — Type AR (finish rating 24 min), Type C (finish rating 24 min), Type IP-A

3D. **Gypsum Board* —** (As an alternate to Items 3, 3A, 3B, or 3C — Not Shown) — For Direct Application to Studs Only: Nom 5/8 in. thick lead backed gypsum panels with beveled, square or tapered edges, applied vertically. Vertical joints centered over studs and staggered min 1 stud cavity on opposite sides of studs. Wallboard secured to studs with 1-5/8 in. long Type W coarse thread gypsum panel steel screws spaced 8 in. OC at perimeter and in the field. Lead batten strips required behind vertical joints of lead backed gypsum wallboard and optional at remaining stud locations. Lead batten strips, min 1-1/2 in. wide, max 10 lb long with a max thickness of 0.125 in. placed on the face of studs and attached to the stud with two 1 in. long Type S-12 pan head steel screws, one at the top of the strip and one at the bottom of the strip. Lead discs or tabs may be used in lieu of or in addition to the lead batten strips or optional at other locations. Max 3/4 in. diam by max 0.125 in. thick lead discs compression fitted or adhered over steel screw heads or max 1/2 in. by 1-1/4 in. by max 0.125 in. thick lead tabs placed on gypsum boards underneath screw locations prior to the installation of the screws. Lead batten strips to have a purity of 99.9% meeting the Federal specification QQ-L-2011, Grade "C".
**RAY-BAR ENGINEERING CORP** — Type RB-LBG (finish rating 24 min)

3E. **Gypsum Board* —** (As an alternate to Items 3, 3A, 3B, 3C, and 3D) — 5/8 in. thick gypsum panels, with square edges, applied either horizontally or vertically. Gypsum panels fastened to framing with 1-1/4 in. long Type W coarse thread gypsum panel steel screws spaced a max 8 in. OC, with last 2 screws 1 and 4 in. from edge of board or nailed 7 in. OC with 6d cement coated nails 1-7/8 in. long, 0.0915 in. shank diam and 15/64 in. diam heads. When used in widths of other than 48 in., gypsum boards are to be installed horizontally.
**GEORGIA-PACIFIC GYPSUM L L C** — Type DGG (finish rating 20 min), GreenGlass Type X (finish rating 23 min)

3F. **Gypsum Board* —** (As an alternate to Items 3, 3A, 3B, 3C, 3D, and 3E) — 5/8 in. glass-mat faced with square edges, applied either horizontally or vertically. Gypsum panels nailed 7 in. OC around the perimeter and in the field with 6d cement coated nails 1-7/8 in. long, 0.0915 in. shank diam and 15/64 in. diam heads. Nails shall be placed 1 inch and 3 inch from horizontal joints and 7 inch OC thereafter.
**CGC INC** — Type USGX (finish rating 22 min)

**UNITED STATES GYPSUM CO** — Type USGX (finish rating 22 min.)

**USG BORAL DRYWALL SFZ LLC** — Type USGX (finish rating 22 min.)

**USG MEXICO S A DE C V** — Type USGX (finish rating 22 min.)

3G. **Gypsum Board* —** (As an alternate to Items 3 through 3F) — 5/8 in. thick paper surfaced applied vertically. Gypsum panels nailed 7 in. OC with 6d cement coated nails 1-7/8 in. long, 0.0915 in. shank diam and 15/64 in. diam heads.
**GEORGIA-PACIFIC GYPSUM L L C** — Type X ComfortGuard Sound Deadening Gypsum Board (finish rating 27 min)

3H. **Gypsum Board* —** (As an alternate to Items 3) — Not to be used with items 6 or 7. 5/8 in. thick paper surfaced applied vertically only. Gypsum panels nailed 7 in. OC with 6d cement coated nails 1-7/8 in. long, 0.0915 in. shank diam and 15/64 in. diam heads.
**NATIONAL GYPSUM CO** — Type GSW8

3I. **Gypsum Board* —** (As an alternate to Items 3 through 3H, Not Shown) — Nominal 5/8 in. thick, 4 ft wide panels, applied vertically. Panels nailed 7 in. OC with 6d cement coated nails 1-7/8 in. long, 0.0915 in. shank diam and 15/64 in. diam heads. Panel joints covered with paper tape and two layers of joint compound.
**PABCO BUILDING PRODUCTS L L C. DBA PABCO GYPSUM** — Type Quietrock 65 (finish rating 20 min)

3J. **Gypsum Board* —** (As an alternate to Item 3) — 5/8 in. thick paper surfaced applied vertically or horizontally. Gypsum panels secured with 1-1/4 in. Type W coarse thread gypsum panel steel screws spaced a maximum of 12 in. OC.
**CERTAINTEED GYPSUM INC** — Type SilentFX

3K. **Gypsum Board* —** (As an alternate to Item 3) — 5/8 in. thick gypsum panels, with beveled, square, or tapered edges, applied either horizontally or vertically. Gypsum panels fastened to framing with 1-1/4 in. long Type W coarse thread gypsum panel steel screws spaced a maximum 8 in. OC with the last screw 1 in. from the edge of the board. When used in widths other than 48 in., gypsum panels are to be installed horizontally.
**NATIONAL GYPSUM CO** — Type FSX (finish rating 20 min), Type FSX-G (finish rating 20 min), Type FSW (finish rating 20 min), Type FSW-2 (finish rating 24 min), Type FSW-3 (finish rating 20 min), Type FSW-5 (finish rating 22 min), Type FSW-G (finish rating 20 min), Type FSX-C (finish rating 20 min), Type FSW-C (finish rating 20 min), Type FSWX-C, Type FSW-6 (finish rating 20 min), Type FSL (finish rating 24 min).

3L. **Gypsum Board* —** (As an alternate to Item 3) — For Direct Application to Studs Only — Nom 5/8 in. thick lead backed gypsum panels with beveled, square or tapered edges, applied vertically. Vertical joints centered over studs and staggered min 1 stud cavity on opposite sides of studs. Wallboard secured to studs with 1-5/8 in. long Type W coarse thread gypsum panel steel screws spaced 8 in. OC at perimeter and in the field. Lead batten strips required behind vertical joints of lead backed gypsum wallboard and optional at remaining stud locations. Lead batten strips, min 2 in. wide, max 10 lb long with a max thickness of 0.140 in. placed on the face of studs and attached to the stud with two 1 in. long Type S-8 pan head steel screws, one at the top of the strip and one at the bottom of the strip. Lead discs, max 5/16 in. diam by max 0.140 in. thick, compression fitted or adhered over the screw heads. Lead batten strips to have a purity of 99.5% meeting the Federal specification QQ-L-2011, Grades "B, C or D".
**MAYCO INDUSTRIES INC** — "X-Ray Shielded Gypsum"

3M. **Gypsum Board* —** (As an alternate to Items 3) — For Direct Application to Studs Only — For use as the base layer or as the face layer. Nom 5/8 in. thick lead backed gypsum panels with beveled, square or tapered edges, applied vertically. Vertical joints centered over studs and staggered min 1 stud cavity on opposite sides of studs. Wallboard secured to studs with 1-5/8 in. long Type W coarse thread gypsum panel steel screws spaced 8 in. OC at perimeter and in the field when applied as the base layer. When applied as the face layer screw length to be increased to 2-1/2 in. Lead batten strips required behind vertical joints of lead backed gypsum wallboard and optional at remaining stud locations. Lead batten strips, min 2 in. wide, max 8 lb long with a max thickness of 0.14 in. placed on the face of studs and attached to the stud with construction adhesive and two 1 in. long Type S-12 pan head steel screws, one at the top of the strip and one at the bottom of the strip. Lead discs, nominal 3/8 in. diam by max 0.085 in. thick. Compression fitted or adhered over the screw heads. Lead batten strips and discs to have a purity of 99.9% meeting the Federal specification QQ-L-2011, Grade "C". Fasteners for face layer gypsum panels (Items 4, 4A or 4B) when installed over lead backed board to be min 2-1/2 in. Type S-12 bugle head steel screws spaced as described in Item 4.
**RADIATION PROTECTION PRODUCTS INC** — Type RPP - Lead Lined Drywall

3N. **Gypsum Board* —** (As an alternate to Item 3) — 5/8 in. thick, 4 ft. wide, applied horizontally or vertically with vertical joints centered over studs and staggered one stud cavity on opposite sides of studs. Secured as described in Item 3 or 3A.
**CERTAINTEED GYPSUM INC** — Easi-Lite Type X (finish rating 24 min), Easi-Lite Type X-2 (finish rating 24 min)

3O. **Wall and Partition Facings and Accessories* —** (As an alternate to Item 3, Not Shown) — Nominal 5/8 in. thick, 4 ft wide panels, applied vertically. Panels nailed 7 in. OC with 6d cement coated nails 1-7/8 in. long, 0.0915 in. shank diam and 15/64 in. diam heads. Panel joints covered with paper tape and two layers of joint compound. Nailheads covered with two layers of joint compound.
**PABCO BUILDING PRODUCTS L L C. DBA PABCO GYPSUM** — Type Quietrock 527 (finish rating 24 min).

3P. **Gypsum Board* —** (As an alternate to Item 3, Not Shown) — Two layers nom. 5/16 in. thick gypsum panels applied vertically or horizontally. Horizontal edge joints and horizontal butt joints on opposite sides of studs need not be staggered or backed by wood studs. Horizontal joints on the same side between face and base layers need not be staggered. Base layer gypsum panels fastened to studs with 1-1/4 in. long drywall nails spaced 8 in. OC. Face layer gypsum panels fastened to studs with 1-7/8 in. long drywall nails spaced 8 in. OC starting with a 4" stagger.
**NATIONAL GYPSUM CO** — Type FSW (finish rating 25 min)

3Q. **Gypsum Board* —** (As an alternate to Item 3) — 5/8 in. thick gypsum panels, with beveled, square, or tapered edges, applied either horizontally or vertically. Gypsum panels fastened to framing with 1-1/4 in. long Type W coarse thread gypsum panel steel screws spaced a maximum 12 in. OC with the last two screws 4 and 1 in. from the edges of the board. When used in widths other than 48 in., gypsum panels are to be installed horizontally.
**CERTAINTEED GYPSUM INC** — Type LGFC6A (finish rating 21 min), Type LGFC2A, Type LGFC-C/A, Type LGFC-WD, Type LGLLX

3R. **Gypsum Board* —** (As an alternate to Item 3. For use with Item 5H) — Any 5/8 in. thick, 4 ft. wide, Gypsum Board listed in Item 3 above. Applied either horizontally or vertically, and screwed to panels with 1-5/8 in. long Type W coarse thread steel screws at 8 in. OC at perimeter and in the field with the last two screws 4 and 3/4 in. from the edges of the board when applied as the base layer. When used in widths other than 48 in., gypsum panels are to be installed horizontally.

3S. **Gypsum Board* —** 3/4 in. thick paper or vinyl surfaced, with beveled, square, or tapered edges, applied either horizontally or vertically. Gypsum panels secured as described in Item 3 with nail length increased to 2 in.
**PABCO BUILDING PRODUCTS L L C. DBA PABCO GYPSUM** — Type PG-13

3T. **Wall and Partition Facings and Accessories* —** (As an alternate to 5/8 in. thick board as outlined in Item 3) — Nominal 1-3/8 in. thick, 4 ft wide panels, applied vertically or horizontally. Fastened with #6 x 2 in. long drywall screws spaced 8 in. OC along the perimeter and 12 in. OC in the field.
**PABCO BUILDING PRODUCTS L L C. DBA PABCO GYPSUM** — Type Quietrock 545

3U. **Gypsum Board* —** (As an alternate to Item 3 - For use with Foamed Plastic products, Item 5J) — 5/8 in. thick, 4 ft. wide, applied vertically with vertical joints centered over studs and staggered one stud cavity on opposite sides of studs. Gypsum panels nailed 7 in. OC with 6d cement coated nails 1-7/8 in. long, 0.0915 in. shank diam and 15/64 in. diam heads.
**AMERICAN GYPSUM CO** — Types AGX-1

**BEIJING NEW BUILDING MATERIALS PUBLIC LTD CO** — Type DBX-1

**CABOT MANUFACTURING ULC** — Type X

**CERTAINTEED GYPSUM INC** — Type X

**CGC INC** — Type SCX

**PANEL REY S A** — Type ARX, PRX

**SIAM GYPSUM INDUSTRY (SARABURI) CO LTD** — Type EX-1

**THAI GYPSUM PRODUCTS PCL** — Type X

**UNITED STATES GYPSUM CO** — Types SCX and SGX

**USG BORAL DRYWALL SFZ LLC** — Types SCX and SGX

**USG MEXICO S A DE C V** — Type SCX

3V. **Gypsum Board* —** (As an alternate to Item 3. For use with Item 5K) — Any 5/8 in. thick, 4 ft. wide, Gypsum Board listed in Item 3 above. Applied vertically with vertical joints centered over studs and staggered one stud cavity on opposite sides of studs. Gypsum panels secured to studs with 1-5/8 in. long Type W coarse thread gypsum panel steel screws spaced 8 in. OC at perimeter and in the field.

ALL REPORTS, PLANS, SPECIFICATIONS AND COMPUTER FILES RELATING TO THIS PROJECT ARE THE PROPERTY OF THE MARTIN ARCHITECTURAL GROUP. THE MARTIN ARCHITECTURAL GROUP RETAINS ALL COMMON LAW, STATUTE AND OTHER RESERVED RIGHTS INCLUDING THE COPYRIGHT THERETO. REPRODUCTION OF THE MATERIAL HEREIN OR SUBSTANTIAL USE WITHOUT WRITTEN PERMISSION OF THE MARTIN ARCHITECTURAL GROUP VIOLATES THE COPYRIGHT LAWS OF THE UNITED STATES AND WILL BE SUBJECT TO LEGAL PROSECUTION.
©2022, The Martin Architectural Group, P.C.

UL Product iQ*

UL Solutions

# BXUV.L546 - Fire-resistance Ratings - ANSI/UL 263

Design/System/Construction/Assembly Usage Disclaimer

- Authorities Having Jurisdiction should be consulted in all cases as to the particular requirements covering the installation and use of UL Certified products, equipment, system, devices, and materials.
- Authorities Having Jurisdiction should be consulted before construction.
- Fire resistance assemblies and products are developed by the design submitter and have been investigated by UL for compliance with applicable requirements. The published information cannot always address every construction nuance encountered in the field.
- When field issues arise, it is recommended the first contact for assistance be the technical service staff provided by the product manufacturer noted for the design. Users of fire resistance assemblies are advised to consult the general Guide Information for each product category and each group of assemblies. The Guide Information includes specifics concerning alternate materials and alternate methods of construction.
- Only products which bear UL's Mark are considered Certified.

## Fire-resistance Ratings - ANSI/UL 263

## BXUV - Fire Resistance Ratings - ANSI/UL 263 Certified for United States

## BXUV7 - Fire Resistance Ratings - CAN/ULC-S101 Certified for Canada

See General Information for Fire-resistance Ratings - ANSI/UL 263 Certified for United States
Design Criteria and Allowable Variances

See General Information for Fire Resistance Ratings - CAN/ULC-S101 Certified for Canada
Design Criteria and Allowable Variances

# Design No. L546

November 1, 2022

**Unrestrained Assembly Rating — 1 Hr**
**Finish Rating — 24 or 25 Min (See Item 5)**
**This design was evaluated using a load design method other than the Limit States Design Method (e.g., Working Stress Design Method). For jurisdictions employing the Limit States Design Method, such as Canada, a load restriction factor shall be used — See Guide BXUV or BXUV7.**

*** Indicates such products shall bear the UL or cUL Certification Mark for jurisdictions employing the UL or cUL Certification (such as Canada), respectively.**

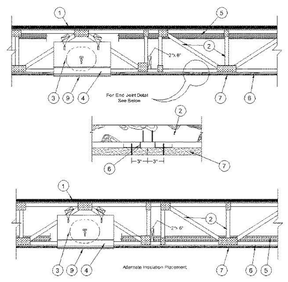


1. **Flooring System —** The flooring system shall consist of one of the following:

**System No. 1**

**Subflooring** — Min 15/32 or 19/32 in. thick wood structural panels, min grade "C-D" or "Sheathing". Face grain of plywood or strength axis of panel to be perpendicular to trusses with joints staggered.

**Finish Flooring - Floor Topping Mixture*** — Min 3/4 thickness of floor topping mixture having a minimum compressive strength of 1500 psi. Refer to manufacturer's instructions accompanying the material for specific mix design.

**MAXXON CORP** — Types Maxxon Standard and Maxxon High Strength

**Floor Mat Materials*** — (Optional) — Floor mat material loose laid over the subfloor. Refer to manufacturer's instructions regarding the minimum thickness of floor topping over each floor mat material.

**MAXXON CORP** — Type Encapsulated Sound Mat

**Floor Mat Reinforcement** — (Optional) Refer to manufacturer's instructions regarding minimum thickness of floor topping for use with floor mat reinforcement.

**Metal Lath** — (Optional) — 3/8 in. expanded galvanized steel diamond mesh, 3.4 lbs/sq yd loose laid over the floor mat material.

**Fiber Glass Reinforcement** - (Optional, Not Shown) - 0.015 in. thick PVC coated non-woven fiberglass mesh, 0.368 lbs/sq yd loose laid over the floor mat material.

**System No. 2**

**Subflooring** — Min 1 by 6 in. T & G lumber fastened diagonally to joists, or min 15/32 in. thick plywood or min 7/16 in. thick oriented strand board (OSB) wood structural panels, min grade "C-D" or "Sheathing". Face grain of plywood or strength axis of panel to be perpendicular to trusses with joints staggered.

**Finish Floor — Mineral and Fiber Board*** — Min 1/2 in. thick, supplied in sizes ranging from 3 ft by 4 ft to 8 ft by 12 ft. All joints to be staggered a min of 12 in. with adjacent sub-floor joints.

**HOMASOTE CO** — Type 440-32 Mineral and Fiber Board

**System No. 3**

**Subflooring** — Min 15/32 in. thick wood structural panels, min grade "C-D" or "Sheathing". Face grain of plywood or strength axis of panels to be perpendicular to the trusses with joints staggered.

**Vapor Barrier** — (Optional) — Nom 0.030 in thick commercial asphalt saturated felt.

**Finish Flooring — Floor Topping Mixture*** — Min 1-1/2 in. thickness of floor topping mixture having a min compressive strength of 1000 psi and a cast density of 100 plus or minus 5 pcf. Foam concentrate mixed 40:1 by volume with water and expanded at 100 psi through nozzle. Mixture shall consist of 1.4 cu feet of preformed foam concentrate to 94 lbs Type I Portland cement, 300 lbs of sand with 5-1/2 gal of water.

**ELASTIZELL CORP OF AMERICA** — Type FF

**System No. 4**

**Subflooring** — Min 15/32 or 19/32 in. thick wood structural panels, min grade C-D or Sheathing. Face grain of plywood or strength axis of panel to be perpendicular to trusses with joints staggered.

**Vapor Barrier** — (Optional) Nom 0.030 in. thick commercial asphalt saturated felt.

**Finish Flooring — Floor Topping Mixture*** —Min 3/4 in. thickness of floor topping mixture having a minimum compressive strength of 1500 psi. Refer to manufacturer's instructions accompanying the material for specific mix design.

**FORMULATED MATERIALS LLC** — Types FR-25, FR-30, and SheMix

**Alternate Floor Mat Material* —** (Optional) Floor mat material nominal 2 - 9.5 mm thick loose laid over the subfloor. Floor topping thickness shall be a minimum of 3/4 in.

**FORMULATED MATERIALS LLC** — Types M1, M2, M3, Elite, Duo, R1, and R2

**System No. 5**

**Subflooring** — Min 15/32 in. thick wood structural panels, min grade "C-D" or "Sheathing". Face grain of plywood or strength axis of panel to be perpendicular to trusses with joints staggered.

**Floor Mat Materials*** —(Optional) — Floor mat material nom 5/64 in. (2 mm) thick adhered to subfloor with Hacker Floor Primer. Primer to be applied to the surface of the mat prior to the placement of a min 1 in. of floor-topping mixture.

**HACKER INDUSTRIES INC** — Type Hacker Sound-Mat.

**Alternate Floor Mat Materials** — (Optional) — Floor mat material nom 1/4 in. (6 mm) thick adhered to subfloor with Hacker Floor Primer. Primer to be applied to the surface of the mat prior to the placement of a min 1-1/4 in. (32 mm) of floor-topping mixture.

**HACKER INDUSTRIES INC** — Type Hacker Sound-Mat II.

**Alternate Floor Mat Materials** — (Optional) — Floor mat material nom 1/8 in. (3mm) thick loose laid over the subfloor. Floor topping thickness shall be a min of 3/4 in. (19 mm)

**HACKER INDUSTRIES INC** — FIRM-FILL SCM 125

**Alternate Floor Mat Materials** — (Optional) — Floor mat material nom 1/4 in. (6 mm) thick loose laid over the subfloor. Floor topping thickness shall be a min of 1 in. (25 mm)

**HACKER INDUSTRIES INC** — Type FIRM-FILL SCM 250, Quiet Quiet 55/025

**Alternate Floor Mat Materials** — (Optional) — Floor mat material nom 3/8 in. (10 mm) thick loose laid over the subfloor. Floor topping thickness shall be a min of 1-1/4 in. (32mm)

**HACKER INDUSTRIES INC** — FIRM-FILL SCM 400, Quiet Quiet 60/040

**Alternate Floor Mat Materials** — (Optional) — Floor mat material nom 3/4 in. (19 mm) thick loose laid over the subfloor. Floor topping thickness shall be a min of 1-1/2 in. (38mm)

**HACKER INDUSTRIES INC** — Type FIRM-FILL SCM 750, Quiet Quiet 65/075

**Metal Lath** — (Optional) — For use with 3/8 in. (10 mm) floor mat materials, 3/8 in. expanded steel diamond mesh, 3.4 lbs/sq yd placed over the floor mat material. Hacker Floor Primer to be applied prior to the placement of the metal lath. When metal lath is used, floor topping thickness a nom 1-1/4 in. over the floor mat.

**Finish Flooring — Floor Topping Mixture*** — Min 3/4 in. thickness of floor topping mixture having a min compressive strength of 1100 psi. Mixture shall consist of 6.8 gal of water to 80 lbs of floor topping mixture to 1.9 cu ft of sand.

**HACKER INDUSTRIES INC** — Firm-Fill Gypsum Concrete, Firm-Fill 2010, Firm-Fill 3310, Firm-Fill 4010, Firm-Fill High Strength, Gyp-Span Radiant

**System No. 6**

**Subflooring** — Min 15/32 or 19/32 in. thick wood structural panels, min grade "C-D" or "Sheathing". Face grain of plywood or strength axis of panel to be perpendicular to trusses with joints staggered.

**Vapor Barrier** — (Optional) — Nom 0.030 in. thick commercial asphalt saturated felt.

**Finish Flooring — Floor Topping Mixture*** — Min 3/4 or 1 in. thickness of floor topping mixture for 19/32 or 15/32 in. thick wood structural panels respectively, having a min compressive strength of 1000 psi. Refer to manufacturer's instructions accompanying the material for specific mix design.

**ARCOSA SPECIALTY MATERIALS** — AccuCrete® Types NexGen, Green, Prime and PreProz, AccuRadiant®, AccuLevel® Types G40, G50 and SG90

**Alternate Floor Mat Material*** — (Optional) — Floor mat material nominal 2 - 9.5 mm thick loose laid over the subfloor. Floor topping shall be a min of 3/4 in. or 1 in. thickness of floor topping for 19/32 or 15/32 in. thick wood structural panels respectively.

**ARCOSA SPECIALTY MATERIALS** — AccuQuiet® Types D13, D-18, D25, DX38, EM.125, EM.125S, EM.250, EM.250S, EM.375, EM.375S, EM.750, and EM.750S.

**System No. 7**

**Subflooring** — 15/32 or 19/32 in. thick wood structural panels, min. grade "C-D" or "Sheathing". Face grain of plywood or strength axis of panels to be perpendicular to joists with joints staggered.

**Vapor Barrier** — (Optional) — Commercial asphalt saturated felt 0.030 in. thick.

**Finish Flooring — Floor Topping Mixture*** — Compressive strength to be 2100 psi min. Thickness to be 3/4 in. min for 19/32 in thick wood structural panels or 1 in. min. for 15/32 in thick wood structural panels. Refer to manufacturer's instructions accompanying the material for specific mix design. Refer to the manufacturer's instructions accompanying the material and/or contact the manufacturer's technical support for specific mix design and minimum thickness recommended for use with eligible floor mat(s).

**System No. 8**

**Subflooring** — Min 15/32 in. thick wood structural panels, min grade "C-D" or "Sheathing". Face grain of plywood or strength axis of panels to be perpendicular to the trusses with joints staggered.

**Vapor Barrier** — (Optional) — Nom 0.010 in. thick commercial asphalt saturated felt.

**Finish Flooring — Floor Topping Mixture*** — Min 3/4 in. thickness of floor topping mixture having a minimum compressive strength of 1800 psi. Refer to manufacturer's instructions accompanying the material for specific mix design.

**UNITED STATES GYPSUM CO** — Types LRK, HSLRK, CSD

**USG MEXICO S A DE C V** — Types LRK, HSLRK, CSD

**Floor Mat Materials*** — (Optional) — Floor mat material loose laid over the subfloor. Refer to manufacturer's instructions regarding the minimum thickness of floor topping over each floor mat material.

**UNITED STATES GYPSUM CO** — Types SAM, LEVELROCK® Brand Sound Reduction Board, LEVELROCK® Brand Floor Underlayment SRM-25

**Alternate Floor Mat Materials*** — (Optional) - Floor mat material loose laid over the subfloor. Refer to manufacturer's instructions regarding minimum thickness of floor topping over floor mat.

**GRASSWORX L L C** — SC Types

**System No. 9**

**Subflooring** — Min 23/32 in. thick T&G wood structural panels, min grade "Underlayment" or "Single-Floor". Face grain of plywood or strength axis of panels to be perpendicular to the trusses with end joints staggered 4 ft. Panels secured to trusses with construction adhesive and No. 6d ringed shank nails spaced 12 in. OC along each truss. Staples having equal or greater withdrawal and lateral resistance strength may be substituted for the 6d nails.

**Gypsum Board* —** One layer of nom 5/8 in. thick, 4 ft wide gypsum board, installed with long dimension perpendicular to joists. Gypsum board secured with 1 in. long No. 6 Type W bugle head steel screws spaced 12 in. OC and located a min of 1-1/2 in. from side and end joints. The joints of the gypsum board are to be staggered a minimum of 12 inches from the joints of the subfloor.

**GEORGIA-PACIFIC GYPSUM L L C** — Type DS

**Floor Mat Materials*** — (As an alternate to the single layer gypsum board) — Floor mat material loose laid over the subfloor.

**MAXXON CORP** — Type Encapsulated Sound Mat

**Gypsum Board*** — (For use when floor mat is used) Two layers of nom 5/8 in. thick, 4 ft wide gypsum board, installed with long dimension perpendicular to joists on top of the floor mat material. Gypsum board secured to each other with 1 in. long No. 6 Type G bugle head steel screws spaced 12 in. OC and located a min of 1- 1/2 in. from side and end joints. The joints of the gypsum board are to be staggered a minimum of 12 inches in between layers and from the joints of the subfloor.

**GEORGIA-PACIFIC GYPSUM L L C** — Type DS

**System No. 10**

**Subflooring** — Min 15/32 or 19/32 in. thick wood structural panels, min grade "C-D" or "Sheathing". Face grain of plywood or strength axis of panel to be perpendicular to trusses with joints staggered.

**Vapor Barrier** — (Optional) — Nom 0.030 in. thick commercial asphalt saturated felt.

**Finish Flooring** — Min 3/4 in. thickness of any Floor Topping Mixture bearing the UL Classification Marking as to Fire Resistance. See Floor- and Roof-Topping Mixtures (CCCW) category for names of Classified Companies. Refer to the manufacturer's instructions accompanying the material and/or contact the manufacturer's technical support for specific mix design and minimum thickness recommended for use with eligible floor mat(s).

**Floor Mat Reinforcement** — (Optional) - Refer to manufacturer's instructions regarding minimum thickness of floor topping for use with floor mat reinforcement.

**Metal Lath** — (Optional) — Expanded steel diamond mesh, 2.5 lb / sq yd loose laid over floor mat material.

**Fiberglass Mesh Reinforcement** — (Optional) — Coated non-woven glass fiber mesh grid loose laid over floor mat material.

2. **Trusses —** Parallel chord trusses spaced a max of 24 in. OC fabricated from min 2 by 4 lumber, with lumber oriented vertically or horizontally. Min truss depth is 12 in. when dampers are not used and 18 in. when dampers are used. Truss members secured together with min 0.036 in. thick galv steel plates. Plates have 5/16 in. long teeth projecting perpendicular to the plane of the plate. The teeth are in pairs facing each other (made by the same punch), forming a split tooth type plate. Each tooth has a chisel point on its outside edge with these points being diagonally opposite each other for each pair. The top half of each tooth has a twist for stiffness. The pairs are repeated on approximately 7/8 in. centers with four rows of teeth per inch of plate width.

3. **Air Duct* —** (Optional) — Any UL Class 0 or Class 1 flexible air duct installed in accordance with the instructions provided by the damper manufacturer

4. **Ceiling Damper* —** (Optional. To be used with Air Duct Item 3) — For use with min 18 in. deep trusses. Max nom area shall be 324 sq in. Max square size shall be 18 in. by 18 in. Rectangular sizes not to exceed 324 sq in. with a max width of 18 in. Max height of damper shall be 14 in. Aggregate damper openings shall not exceed 162 sq in. per 100 sq ft of ceiling area. Damper installed in accordance with the manufacturers installation instructions provided with the damper. A steel grille (Item 9) shall be installed in accordance with installation instructions.
**CAS AIR PRODUCTS** — Model RD-521

**POTTORFF** — Model CFD-521

4A. **Alternate Ceiling Damper* —** For use with min 18 in. deep trusses. Max nom area shall be 196 sq in. Max square size shall be 14 in. by 14 in. Rectangular sizes not to exceed 196 sq in. with a max width of 26 in. Max height of damper shall be 7 in. Aggregate damper openings shall not exceed 98 sq in. per 100 sq ft of ceiling area. Damper installed in accordance with the manufacturers installation instructions provided with the damper. A steel grille (Item 9) not to exceed 144 in.$^2$ shall be installed in accordance with installation instructions.
**CAS AIR PRODUCTS** — Model RD-521-BT

**POTTORFF** — Model CFD-521-BT.

4B. **Alternate Ceiling Damper* —** (Optional. To be used with Air Duct Item 3) — For use with min 18 in. deep trusses. Max nom area shall be 256 sq in. with the length not to exceed 24 in. and the width not to exceed 20 in. Max height of damper shall be 17 in. Aggregate damper openings shall not exceed 128 sq in. per 100 sq ft of ceiling area. Damper installed in accordance with the manufacturers installation instructions provided with the damper. A steel grille (Item 9) shall be installed in accordance with installation instructions.
**CAS AIR PRODUCTS** — Model RD-521-IT, RD-521-NP

**POTTORFF** — Models CFD-521-IT, CFD-521-NP

4C. **Alternate Ceiling Damper* —** For use with min 18 in. deep trusses, Max nom area shall be 144 sq in. with the length not to exceed 14 in. and the width not to exceed 12 in. Max height of damper shall be 17-7/8 in. Aggregate damper openings shall not exceed 74 sq in. per 100 sq ft of ceiling area. Damper installed in accordance with the manufacturers installation instructions provided with the damper. A steel grille (Item 9) shall be installed in accordance with installation instructions.
**CAS AIR PRODUCTS** — Model RD-521-90, RD-521-NP90

**POTTORFF** — Models CFD-521-90, CFD-521-90NP

4D. **Alternate Ceiling Damper* —** For use with min. 18 in. deep trusses. Max. nom area shall be 349 sq in. Max. overall length and width shall not exceed 18-11/16 in. by 18-11/16 in. with max. 16 in. by 16 in. register opening. Aggregate damper openings shall not exceed 175 sq in. per 100 sq ft of ceiling area. Damper installed in accordance with the manufacturers installation instructions provided with the damper. An aluminum or steel grille (Item 9) shall be installed in accordance with installation instructions.
**MIAMI TECH INC** — Model Series RxCSD5 (or RxCSY) or RxCSYD

4E. **Alternate Ceiling Damper* —** Ceiling damper & fan assembly for use with min 18 in. deep trusses. Max nom area shall be 75 sq in. with the length not to exceed 8-9/16 in. and the width not to exceed 8-3/4 in. Max height of damper shall be 9-7/8 in. Aggregate damper openings shall not exceed 38 sq in. per 100 sq ft of ceiling area. Damper shall be installed in combination with one of the fan models described in, and in accordance with, the manufacturers installation instructions provided with the damper. A plastic grille (Item 9) shall be installed in accordance with installation instructions.
**DELTA ELECTRONICS INC** — Models CR2D, GBR-CR2D, ITG-CR2D

4F. **Alternate Ceiling Damper* —** For use with min 18 in. deep trusses. Max nom area shall be 324 sq in. Max square size shall be 18 in. by 18 in. Rectangular sizes not to exceed 324 sq in. with a max length of 20 in. and a max width of 22 in. Max height of damper shall be 14 in. Aggregate damper openings shall not exceed 154 sq in. per 100 sq ft of ceiling area. Damper installed in accordance with the manufacturer's installation instructions provided with the damper. An aluminum or steel grille (Item 9) shall be installed in accordance with installation instructions.
**UNITED ENERTECH CORP** — Type C-S/R-WT or C-S/R-WTP (Max nom area 324 sq. in.) or C-S/R-WT7S or C-S/R-WTP7S (Max nom area 162 sq. in.)

4G. **Alternate Ceiling Damper* —** Ceiling damper & fan assembly for use with min 18 in. deep trusses. Max nom area shall be 75 sq in. with the length not to exceed 9-1/4 in. and the width not to exceed 9-3/4 in. Max height of damper shall be 9-7/8 in. Aggregate damper openings shall not exceed 45 sq in. per 100 sq ft of ceiling area. Damper shall be installed in combination with one of the fan models described in, and in accordance with, the manufacturer's installation instructions provided with the damper. A plastic grille (Item 9) shall be installed in accordance with installation instructions.
**DELTA ELECTRONICS INC** — Model SG-CRD

4H. **Alternate Ceiling Damper* —** Ceiling damper & fan assembly for use with min 18 in. deep trusses. Max nom area shall be 131 sq in. with the length not to exceed 11-1/16 in. and the width not to exceed 11-7/8 in. Aggregate damper openings shall not exceed 66 sq in. per 100 sq ft of ceiling area. Damper shall be installed in combination with one of the fan models described in, and in accordance with, the manufacturer's installation instructions provided with the damper. A plastic grille (Item 9) shall be installed in accordance with installation instructions.
**DELTA ELECTRONICS INC** — Model SMT-CRD

4I. **Alternate Ceiling Damper* —** Ceiling damper & fan assembly for use with min 18 in. deep trusses. Max nom area shall be 103 sq in. with the length not to exceed 10-1/8 in. and the width not to exceed 10-1/8 in. Aggregate damper openings shall not exceed 52 sq in. per 100 sq ft of ceiling area. Damper shall be installed in combination with one of the fan models described in, and in accordance with, the manufacturer's installation instructions provided with the damper. A plastic grille (Item 9) shall be installed in accordance with installation instructions.
**PANASONIC CORPORATION, PANASONIC CORPORATION OF NORTH AMERICA** — Model FC RDSDC1

4J. **Alternate Ceiling Damper* —** Ceiling damper & fan assembly for use with min 18 in. deep trusses. Max nom area shall be 113 sq in. with the length not to exceed 10-1/8 in. and the width not to exceed 11-1/8 in. Aggregate damper openings shall not exceed 57 sq in. per 100 sq ft of ceiling area. Damper shall be installed in combination with one of the fan models described in, and in accordance with, the manufacturer's installation instructions provided with the damper. A plastic grille (Item 9) shall be installed in accordance with installation instructions.
**BROAN-NUTONE L L C** — Model RDRVMT

4K. **Alternate Ceiling Damper* —** Ceiling damper & fan assembly for use with min 18 in. deep trusses. Max nom area shall be 79 sq in. with the length not to exceed 10 in. and the width not to exceed 7-15/16 in. Aggregate damper openings shall not exceed 40 sq in. per 100 sq ft of ceiling area. Damper shall be installed in combination with one of the fan models described in, and in accordance with, the manufacturer's installation instructions provided with the damper. A metallic grille (Item 9) shall be installed in accordance with installation instructions.
**BROAN-NUTONE L L C** — Models RDJ1 and RDH

4L. **Alternate Ceiling Damper* —** Ceiling damper & fan assembly for use with min 18 in. deep trusses. Max nom area shall be 87 sq in. with the length not to exceed 9 in. and the width not to exceed 9-11/16 in. Aggregate damper openings shall not exceed 44 sq in. per 100 sq ft of ceiling area. Damper shall be installed in combination with one of the fan models described in, and in accordance with, the manufacturer's installation instructions provided with the damper. A plastic grille (Item 9) shall be installed in accordance with installation instructions.
**BROAN-NUTONE L L C** — Model RDMWT

4M. **Alternate Ceiling Damper* —** Ceiling damper & fan assembly for use with min 18 in. deep trusses. Max nom area shall be 87 sq in. with the length not to exceed 9 in. and the width not to exceed 9-11/16 in. Aggregate damper openings shall not exceed 44 sq in. per 100 sq ft of ceiling area. Damper shall be installed in combination with one of the fan models described in, and in accordance with, the manufacturer's installation instructions provided with the damper. A plastic grille (Item 9) shall be installed in accordance with installation instructions.
**BROAN-NUTONE L L C** — Model RDMWT2

4N. **Alternate Ceiling Damper* —** (Optional, To be used with Air Duct Item 3) — For use with min 18 in. deep trusses. Max nom 21 in. long by 18 in. wide, fabricated from galvanized steel. Plenum box max size nom 21 in. long by 18 in. wide by 14 in. high (inner dimension) fabricated from either galvanized steel or min 1 in. thick Listed Duct Board bearing the UL Listing Marking having a min R-Value of 4.3. Installed in accordance with the instructions provided by the manufacturer. Max damper openings not to exceed 180 sq in. per 100 sq ft of ceiling area.
**GREENHECK FAN CORP** — Model CID-1WT

4O. **Alternate Ceiling Damper* —** (Optional, To be used with Air Duct Item 3) — For use with min 18 in. deep trusses. Max nom 12 in. long by 12 in. wide with an 8 in. diameter damper

4J. **Alternate Ceiling Damper*** – (Optional, to be used with Air Duct Item 3) For use with min 18 in. deep trusses. Maximum 20 in. long by 18 in. wide by 2-1/8 in. high, fabricated from galvanized steel. Plenum box maximum size nom. 21 in. long by 18 in. wide by 16 in. high fabricated from either galvanized steel or Classified Air Duct Materials bearing the UL Class 0 or Class 1 rigid air duct material. Installed in accordance with the instructions provided by the manufacturer. Max damper openings not to exceed 180 sq in. per 100 sq ft of ceiling area.
**NAILOR INDUSTRIES INC** — Types 0755, 0755A, 0756, 0756D, 0757, 0757D, 0757P, 0757DP, 0763

**SAFE AIR DOWCO** — 0455, 0455A, 0456, 0456D, 0457, 0457D, 0457-DB, 0457-FB, 0457-IB, 0463-GB, 0463

4V. **Alternate Ceiling Damper*** – (Optional, to be used with Air Duct Item 3) for use with min 18 in. deep trusses. Max nom 10-3/8 in. long by 10-3/8 in. wide, fabricated from galvanized steel. Installed in accordance with the instructions provided by the manufacturer. Max damper openings not to exceed 54 sq in. per 100 sq ft of ceiling area.
**GREENHECK FAN CORP** — Model CFD-300WT

5. **Batts and Blankets*** — (Optional with Items 7 and 7B; Required with Item 7A) — Glass fiber or mineral wool insulation bearing the UL Classification Marking as to Surface Burning Characteristics and/or Fire Resistance. When the resilient channels (Item 6) or furring channels (Item 6A, 6D) are spaced 16 in. OC, the insulation shall be a max of 3-1/2 in. thick, and shall be secured against the subflooring with staples at 12 in. OC or held suspended in the concealed space with 0.090 in. diam galv steel wires attached to the wood trusses at 12 in. OC. When the resilient channels (Item 6) or furring channels (Item 6A, 6D) are spaced a max of 12 in. OC or when the Steel Framing Members (Item 6B) are used, there is no limit in the overall thickness of insulation, and the insulation can be secured against the subflooring, held suspended in the concealed space or draped over the resilient or furring channels (or Steel Framing Members) and gypsum panel membrane. When **Steel Framing Members** (Item 6C) are used, max 3-1/2 in. thick insulation shall be draped over the furring channels (Item 6Ca) and gypsum board ceiling membrane, and friction-fitted between trusses and Steel Framing Members (Item 6Cd). The finished rating has only been determined when the insulation is secured to the subflooring.

5A. **Fiber, Sprayed*** — (Dry Dense Packed 100% Borate Formulation) — As an alternate to Item 5 — When used, the resilient channel and gypsum board attachment is modified as noted in Items 6 and 7 and wire mesh (Item 10) shall be attached to the furring channels to facilitate installation of the material. The finished rating when Fiber, Sprayed is used has not been determined. The fiber is applied without water or adhesive at a nominal dry density of 3.5 lb/ft $^3$, in accordance with the application instructions supplied with the product. When Item 5A (Fiber, Sprayed) is used, two layers of gypsum board required as described in Item 7. Not evaluated for use with Items 6B, 6C or 6D.
**U S GREENFIBER L L C** — INS735, INS745, INS750LD, INS765LD, INS775LD, & SANCTUARY to be used with dry application only.

5B. **Fiber, Sprayed**** — (Loose Fill 100% Borate Formulation) — As an alternate to Items 5 and 5A — The finished rating when Fiber, Sprayed is used has not been determined. The fiber is applied without water or adhesive at a minimum dry density of 0.5 lb/ft $^3$ and at a max thickness of 3-1/2 in., in accordance with the application instructions supplied with the product. Wire mesh (Item 10) shall be attached to the furring channels to facilitate installation of the material. When Item 5B (Fiber, Sprayed) is used, two layers of gypsum board required as described in Item 7. Not evaluated for use with Items 6B, 6C or 6D.
**U S GREENFIBER L L C** — INS735, INS745, INS750LD, INS765LD, INS775LD, & SANCTUARY to be used with dry application only.

5C. **Cavity Insulation - Batts and Blankets* or Fiber, Sprayed**** — (Required for Item 7C, As described above in Items 5 through 5B) — Min. 3-1/2 in thick with no limit on maximum thickness fitted in the concealed space, draped over the resilient channel (Item 6I) /gypsum board (Item 7C) ceiling membrane.

6. **Resilient Channels —** Resilient channels, formed of 25 MSG thick galv steel, spaced 16 in. OC perpendicular to trusses. When insulation (Items 5, 5A, 5B) is draped over the resilient channel/gypsum board ceiling membrane, the spacing shall be reduced to 12 in. OC. Channels secured to each truss with 1-1/4 in. long Type S bugle head steel screws. Channels overlapped 4 in. at splices. Two channels, spaced 6 in OC, oriented opposite each gypsum board end joint as shown in the above illustration. Additional channels shall extend 6 in beyond each side edge of board.

6A. **Steel Framing Members*** — (Not Shown) — As an alternate to Item 6, furring channels and Steel Framing Members* as described below:
a. **Furring Channels —** Formed of No. 25 MSG galv steel, 2-9/16 in. or 2-23/32 in. wide by 7/8 in. deep, spaced 16 in. OC perpendicular to trusses. When batt insulation (Items 5) is draped over the resilient channel/gypsum board ceiling membrane, the resilient channel spacing shall be reduced to 12 in. OC. Channels secured to trusses as described in Item b. Ends of adjoining channels overlapped 6 in. and tied together with double strand of No. 18 SWG galv steel wire near each end of overlap.

b. **Steel Framing Members* —** Used to attach furring channels (Item a) to trusses (Item 2). Clips spaced 48 in. OC, RSIC-1 and RSIC-1 (2.75) clips secured to alternating trusses with No. 8 x 2-1/2 in. coarse drywall screw through the center grommet, RSIC-SI-X secured with No. 10 x 3-1/2 in. screws. RSIC-V and RSIC-V (2.75) clips secured to alternating trusses with No. 8 x 1-1/2 in. coarse drywall screw through the center hole. Furring channels are friction fitted into clips. RSIC-1, RSIC-SI-X, and RSIC-V clips for use with 2-9/16 in. wide furring channels. RSIC-1 (2.75) and RSIC-V (2.75) clips for use with 2-23/32 in. wide furring channels. Adjoining channels are overlapped as described in Item a. As an alternate, ends of adjoining channels may be overlapped 6 in. and secured together with two self-tapping No. 6 framing screws, min 7/16 in. long at the midpoint of the overlap, with one screw on each flange of the channel. Additional clips required to hold furring channel that supports the gypsum board butt joints, as described in Item 7.
**PAC INTERNATIONAL L L C** — Types RSIC-1, RSIC-V, RSIC-SI-X, RSIC-1 (2.75), RSIC-V (2.75).

6B. **Attachment Steel Framing Members —** (Not Shown) — As an alternate to Items 6 and 6A, main runners, cross tees, cross channels and wall angle as listed below.
a. **Main Runners —** Nom 10 or 12 ft long, 15/16 in. or 1-1/2 in. wide face, spaced 4 ft OC. Main runners suspended by min 12 SWG galv steel hanger wires spaced 48 in. OC. Hanger wires to be located adjacent to main runner/cross tee intersections. Hanger wires wrapped and twist-tied on 16d nails driven in to side of trusses at least 5 in. above the bottom face.

b. **Cross Tees or Channels —** Nom 4 ft long cross tees, with 15/16 in. or 1-1/2 in. wide face, or nom 4 ft long cross channels, with 1-1/2 in. wide face, either spaced 16 in. OC, installed perpendicular to the main runners. Additional cross tees or channels used 8 in. from each side of butted gypsum board end joints. The cross tees or channels may be riveted or screw-attached to the wall angle or channel to facilitate the ceiling installation.

c. **Wall Angle or Channel —** Painted or galv steel angle with 1 in. legs or channel with 1 in. legs, 1-9/16 in. deep attached to walls at perimeter of ceiling with fasteners 16 in. OC. To support steel framing member ends and for screw-attachment of the gypsum panel.
**CGC INC** — Type DGL or RK

**USG INTERIORS LLC** — Type DGL or RK

6C. **Steel Framing Members*** — (Not Shown) — As an alternate to Items 6, 6A and 6B.
a. **Furring Channels —** Hat-shaped furring channels, 7/8 in. deep by 2-5/8 in. wide at the base and 1-3/4 in. wide at the face, formed from No. 25 ga. galv steel, spaced max. 16 in. OC perpendicular to trusses and Cold Rolled Channels (Item 6Cb). Furring channels secured to Cold Rolled Channels at every intersection with a 1/2 in. pan head self-drilling screw through each furring channel leg. Ends of adjoining channels overlapped 4 in. and tied together with two double strand No. 18 SWG galv steel wire ties, one at each end of overlap. Supplemental furring channels at base layer and outer layer gypsum board butt joints are not required. Batts and Blankets draped over furring channels as described in Item 5. Two layers of gypsum board attached to furring channels as described in Item 7.

b. **Cold Rolled Channels —** 1-1/2 in. by 1/2 in., formed from No. 16 ga. galv steel, positioned vertically and parallel to trusses, friction-fitted into the channel caddy on the Steel Framing Members (Item 6Cd). Adjoining lengths of cold rolled channels lapped min. 6 in. and wire-tied together with two double strand 18 SWG galv steel wire ties, one at each end of overlap.

c. **Blocking —** Where truss design does not permit direct, full contact of the hanger bracket, a piece of nominal 2 by 4 in. lumber (blocking), min. 6 in. long to permit full contact of the hanger bracket, to be secured vertically to the side of the truss (Item 2) at the top and bottom of the blocking at each Steel Framing Member (Item 6Cd) location.

d. **Steel Framing Members* —** Hangers spaced 48 in. OC, max along truss, and secured to the Blocking (Item 6Cc) on alternating trusses with a single 5/16 in. by 2 in. hex head lag bolt or four #6 1-1/4 in. drywall screws through mounting hole(s) on the hanger bracket. The two 1/4 in. long steel teeth on each hanger are embedded in the side of the blocking. Hanger positioned on blocking and leveling bolt height adjusted such that furring channels are flush with bottom of trusses before gypsum board installation. Spring gauge of hanger chosen per manufacturer's instructions.
**KINETICS NOISE CONTROL INC** — Type ICW.

6D. **Steel Framing Members*** — (Not Shown) — As an alternate to Items 6, 6A, 6B and 6C.
a. **Furring Channels —** Formed of No. 25 MSG galv steel, 2-3/8 in. wide by 7/8 in. deep, spaced 16 in. OC perpendicular to wood structural members. When insulation, Items 5 or 5A is applied over the furring channel/gypsum panel ceiling membrane, the furring channel spacing shall be reduced to 12 in. OC. Channels secured to trusses as described in Item b. Ends of adjoining channels overlapped 6 in. and tied together with double strand of No. 18 AWG galv steel wire near each end of overlap.

b. **Steel Framing Members* —** Used to attach furring channels (Item a) to trusses (Item 2). Clips spaced 48 in. OC, and secured to the bottom chord of alternating trusses with two No. 8 x 2-1/2 in. coarse drywall screw, one through the hole at each end of the clip. When insulation, Items 5 or 5A is applied over the furring channel/gypsum panel ceiling membrane, the clip spacing shall be reduced to 24 in. OC and secured to consecutive trusses. Furring channels are friction fitted into clips. Adjoining channels are overlapped as described in Item a. As an alternate, ends of adjoining channels may be overlapped 6 in. and secured together with two self-tapping No. 6 framing screws, min 7/16 in. long at the midpoint of the overlap, with one screw on each flange of the channel. Additional clips required to hold furring channel that supports the gypsum board butt joints, as described in Item 7. Two layers of gypsum board required as described in Item 7. Not evaluated for use with Item 5B.
**KINETICS NOISE CONTROL INC** — Type Isomax.

6E. **Steel Framing Members*** — (Optional, Not Shown) — Used as an alternate method to attach min. 1/2 in. deep resilient channels (Item 6) to wood trusses (Item 2). Resilient channels are friction fitted into clips, and then clips are secured to the bottom chord of each wood truss with a min. 1-3/4 in. long Type S bugle head steel screw through the center hole of the clip and the resilient channel flange. Adjoining resilient channels are overlapped 4 in. under trusses. The clip flange is opened slightly to accommodate the two overlapped channels. Additional clips required to hold resilient channel that supports the gypsum board butt joints, as described in Item 7.
**KEENE BUILDING PRODUCTS CO INC** — Type RC Assurance.

6F. **Steel Framing Members*** — (Not Shown) — As an alternate to Item 6, furring channels and Steel Framing Members* as described below:
a. **Furring Channels —** Formed of No. 25 MSG galv steel, 2-3/8 in. wide by 7/8 in. deep, spaced 16 in. OC perpendicular to trusses. When batt insulation (Items 5) is draped over the resilient channel/gypsum board ceiling membrane, the resilient channel spacing shall be reduced to 12 in. OC. Channels secured to trusses as described in Item b. Ends of adjoining channels overlapped 6 in. and tied together with double strand of No. 18 SWG galv steel wire near each end of overlap.

b. **Steel Framing Members* —** Used to attach furring channels (Item a) to trusses (Item 2). Clips spaced 48 in. OC, GenieClips secured to alternating joists with No. 8 x 2-1/2 in. coarse drywall screw through the center grommet. When insulation, Items 5 is applied over the furring channel/gypsum panel ceiling membrane, the clip spacing shall be reduced to 24 in. OC and secured to consecutive trusses. Furring channels are friction fitted into clips. Adjoining channels are overlapped as described in Item a. As an alternate, ends of adjoining channels may be overlapped 6 in. and secured together with two self-tapping No. 6 framing screws, min 7/16 in. long at the midpoint of the overlap, with one screw on each flange of the channel. Additional clips required to hold furring channel that supports the gypsum board butt joints, as described in Item 7. Not evaluated for use with Item 5A or 5B.
**PLITEQ INC** — Type GENIECLIP

6G. **Alternate Steel Framing Members*** — (Not Shown) — As an alternate to Items 6-6F, furring channels and Steel Framing Members as described below.
a. **Furring Channels —** Formed of No. 25 MSG galv steel, 2-5/8 in. wide by 7/8 in. deep, spaced 16 in OC, perpendicular to trusses. When batt insulation (Items 5) is draped over the resilient channel/gypsum board ceiling membrane, the resilient channel spacing shall be reduced to 12 in. OC. Channels secured to trusses as described in Item b.

b. **Steel Framing Members* —** Used to attach furring channels (Item a) to trusses (Item 2). Clips spaced at 48" OC and secured to the bottom of the joists with one 2 in. Coarse Drywall Screw with 1 in. diam washer through the center hole. Furring channels are then friction fitted into clips. Ends of channels are overlapped 6" and tied together with double strand of No. 18 AWG galvanized steel wire Additional clips are required to hold the Gypsum Butt joints as described in Item 7B.
**STUDCO BUILDING SYSTEMS** — RESILMOUNT Sound Isolation Clips - Type A237 or A237R

6H. **Alternate Steel Framing Members*** — (Not Shown) — As an alternate to Items 6-6G, furring channels and Steel Framing Members as described below.
a. **Furring Channels —** Formed of No. 25 MSG galv steel, 2-1/2 in. wide by 7/8 in deep, spaced 16 in OC, perpendicular to trusses. When batt insulation (Items 5) is draped over the resilient channel/gypsum board ceiling membrane, the resilient channel spacing shall be reduced to 12 in. OC. Channels secured to trusses as described in Item b.

b. **Steel Framing Members* —** Used to attach furring channels (Item a) to trusses (Item 2). Clips spaced at 48" OC and secured to the bottom of the trusses with one 2-1/2 in. Coarse Drywall Screw with 1 in. diam washer through the center hole. Furring channels are friction fitted into clips. Ends of channels are overlapped 6" and tied together with double strand of No. 18 AWG galvanized steel wire Additional clips are required to hold the Gypsum Butt joints as described in Item 7B.

7. **Gypsum Board* —** Nom 5/8 in. thick, 48 in. wide gypsum board. When resilient channels (Item 6) are used, gypsum board installed with long dimension perpendicular to resilient channels. Gypsum board secured with 1 in. long Type S bugle head screws spaced 12 in. OC and located a min of 1/2 in. from side joints and 3 in. from end joints. End joints secured to both resilient channels as shown in end joint detail. When batt insulation (Item 5) is draped over the resilient channel/gypsum board ceiling membrane, screws spacing shall be 8 in. OC. When **Steel Framing Members*** (Item 6A, 6D) are used, gypsum board installed with long dimension perpendicular to furring channels and side joints of sheet located beneath joists. Gypsum board secured to furring channels with 1 in. long Type S bugle head screws spaced 12 in. OC in the field. Butted end joints shall be staggered min 2 ft within the assembly, and occur between the continuous furring channels. At butted end joints, each end of gypsum panel shall be supported by a single length of furring channel equal to the width of the gypsum board plus 6 in. on each end. The two furring channels shall be spaced approximately 3-1/2 in. OC, and be attached to underside of the joist with one clip at each end of the channel. When **Steel Framing Members*** (Item 6B) are used, gypsum panels installed with long dimension perpendicular to cross tees with side joints centered along main runners and end joints centered along cross tees. Panels fastened to cross tees with 1 in. long . Type S bugle-head screws spaced in the field and 8 in. OC along end joints. Panels fastened to main runners with 1 in. long . Type S bugle-head screws spaced midway between cross tees. Screws along sides and ends of panels spaced 3/8 to 1/2 in. from panel edge. End joints of panels shall be staggered with spacing between joints on adjacent panels not less than 4 2 ft OC. When **Fiber, Sprayed** (Items 5A or 5B) is used, two layers of nom 5/8 in. thick, 4 ft wide gypsum board are installed with long dimensions perpendicular to furring channels. Base layer gypsum board secured with 1 in. long Type S bugle head steel screws spaced 12 in. OC and located a min of 1/2 in. from side joints and 3 in. from the end joints. End joints secured to both resilient channels as shown in end joint detail. Outer layer gypsum board secured with 1-5/8 in. long Type S bugle head steel screws spaced 12 in. OC and located a min of 1/2 in. from side joints and 3 in. from the end joints. Outer layer shall be finished as described in Item 8. When both **Steel Framing Members** (Item 6A) and **Fiber, Sprayed** (Items 5A or 5B) are used, furring channels spaced 12 in. OC and two layers of nom 5/8 in. thick, 4 ft wide gypsum board are installed with long dimension perpendicular to furring channels. Base layer secured to furring channels with nom 1 in. long Type S bugle head screws spaced 8 in. OC along butted end joints and in the field of the board. Butted end joints shall be staggered min. 2 ft within the assembly, and occur midway between the continuous furring channels. Each end of each gypsum panel shall be supported by a single length of furring channel equal to the width of the gypsum board plus 6 in. on each end. The two support furring channels shall be spaced approximately 3-1/2 in. OC, and be attached to underside of the truss with one clip at each end of the channel. Outer layer secured to furring channels using 1-5/8 in. long Type S screws spaced 8 in. OC along butted end joints and in the field of the panel. Butted end joints shall be staggered min. 2 ft within the assembly, and occur midway between the continuous furring channels. Each end of each gypsum panel shall be supported by a single length of furring channel equal to the width of the gypsum panel plus 6 in. on each end. The two furring channels shall be spaced approximately 3-1/2 in. OC, and be attached to underside of the truss with one clip at each end of the channel. Outer layer of base layer boards with No. 10, 1-1/2 in. long drywall screws spaced 8 in. OC and 1-1/2 in. from the end joint. Butted end joints to be offset a min of 24 in. from base layer end joints. Butted side joints of outer layer to be offset min 16 in. from butted side joints of base layer. When **Steel Framing Members** (Item 6C) are used, two layers of nom 5/8 in. thick, 4 ft wide gypsum board are installed with long dimensions perpendicular to furring channels (Item 6Ca). Base layer attached to the furring channels using 1 in. long Type S bugle head steel screws spaced 8 in. OC along butted end joints and 12 in. OC in the field of the board. Butted end joints centered on the continuous furring channels. Butted base layer end joints to be offset a min of 16 in. in adjacent courses. Outer layer attached to the furring channels using 1-5/8 in. long Type S bugle head steel screws spaced 8 in. OC at butted end joints and 12 in. OC in the field. Butted end joints centered on the continuous furring channels and offset a min of 16 in. from butted end joints of base layer. Butted side joints of outer layer to be offset min 16 in. from butted side joints of base layer. When **Steel Framing Members** (Item 6D) are used, two layers of nom 5/8 in. thick, 4 ft wide gypsum board are installed with long dimensions perpendicular to furring channels. Base layer attached to the furring channels using 1 in. long Type S bugle-head steel screws spaced 12 in. OC in the field of the board. Butted end joints shall be staggered min 2 ft. within the assembly, and occur midway between the continuous furring channels. Each end of each gypsum board shall be supported by a single length of furring channel equal to the width of the gypsum board plus 6 in. on each end. The two furring channels shall be spaced approximately 4 in. OC, and be attached to underside of the truss with one lsomax clip at each end of the channel. Screw spacing along the gypsum board butt joint shall be 8 in. OC. Outer layer attached to the furring channels using 1-5/8 in. long Type S bugle-head steel screws spaced 12 in. OC in the field. The end of the outer layer boards at the butt joint shall be attached to the base layer boards with 1-5/8 in. long Type G screws spaced 8 in. OC and 1-1/2 in. from the end joint. Butted end joints to be offset a min of 8 in. from base layer end joints. Butted side joints of outer layer to be offset min 18 in. from butted side joints of base layer. Outer layer shall be finished as described in Item 8. When **Steel Framing Members** (Item 6F) are used, two layers of nom 5/8 in. thick, 4 ft wide are installed with long dimensions perpendicular to furring channels. Gypsum board secured to furring channels using 1 in. long No. 6 Type S bugle-head steel screws spaced 12 in. OC in the field of the board. Butted end joints shall be staggered minimum 2 ft. within the assembly. Additional furring channels constructed as per Item 6F shall be used to support each end of each gypsum board. These additional furring channels shall be attached to underside of the truss with Genie clips as described in Item 6F. Screw spacing along the gypsum board butt joint shall be 8 in. OC. Outer layer attached to the furring channels using 1-5/8 in. long No. 6 Type S bugle-head steel screws spaced 12 in. OC in the field. The outer layer boards at the butt joint shall be attached to the base layer boards with No. 10, 1-1/2 in. long drywall screws spaced 8 in. OC and 1-1/2 in. from the end joint. Butted end joints to be offset a min of 24 in. from base layer end joints. Butted side joints of outer layer to be offset min 8 in. from base layer end joints. Butted side joints of outer layer to be offset min 16 in. from butted side joints of base layer. When **Steel Framing Members** (Item 6G) are used, one layer of nom 5/8 in. thick, 4 ft wide gypsum board is installed with long dimensions perpendicular to furring channels. Gypsum board secured to furring channels with nom 1 in. long Type S bugle-head steel screws spaced 8 in. OC in the field of the board. Gypsum board butted end joints shall be staggered minimum 48 in. and centered over main furring channels. At the gypsum board butt joints, each end of each gypsum board shall be supported by a single length of furring channel equal to the width of the gypsum board plus 3 in. on each end. The two support furring channels shall be spaced approximately 3 in. in from joint. Screw spacing along the gypsum board butt joint and along both additional channels shall be 8 in. OC. Additional screws shall be placed in the adjacent section of gypsum board into the aforementioned 3 in. extension of the extra butt joint channels as well as into the main channel that runs between. Butt joint furring channels shall be attached with one RESILMOUNT Sound Isolation Clip at each end of the channel.
When **Steel Framing Members** (Item 6H) are used, one layer of nom 5/8 in. thick, 4 ft wide gypsum board is installed with long dimensions perpendicular to furring channels. Gypsum board secured to furring channels with nom 1 in. long Type S bugle-head steel screws spaced 8 in. OC in the field of the board. Gypsum board butted end joints shall be staggered minimum 48 in. and centered over main furring channels. At the gypsum board butt joints, each end of each gypsum board shall be supported by a single length of furring channel equal to the width of the gypsum board plus 3 in. on each end. The two support furring channels shall be spaced approximately 3 in. in from joint. Screw spacing along the gypsum board butt joint and along both additional channels shall be 8 in. OC. Additional screws shall be placed in the adjacent section of gypsum board into the aforementioned 3 in. extension of the extra butt joint channels as well as into the main channel that runs between. Butt joint furring channels shall be attached with one SonusClip at every truss involved with the butt joint.
When **Steel Framing Members** (Item 6I) are used, gypsum board installed with long dimension perpendicular to resilient channels. Gypsum board secured with 1-1/8 in. long Type S bugle head screws spaced 8 in. OC and located a min of 1/2 in. from side joints and 3 in. from the end joints. End joints secured to both resilient channels as shown in end joint detail.
When **Steel Framing Members** (Item 6J) are used, gypsum board installed with long dimension perpendicular to furring channels. Gypsum board secured with 1-1/8 in. long Type S bugle head screws spaced 8 in. OC and located a min of 1/2 in. from side joints and 3 in. from the end joints. End joints secured to both resilient channels as shown in end joint detail.
When **Steel Framing Members** (Item 6K) are used, gypsum board installed with long dimension perpendicular to furring channels. Gypsum board secured with 1-1/8 in. long Type S bugle head screws spaced 8 in. OC and located a min of 1/2 in. from side joints and 3 in. from the end joints. End joints secured to both resilient channels as shown in end joint detail.
When **Steel Framing Members** (Item 6L) are used, gypsum board installed with long dimension perpendicular to furring channels. Gypsum board secured with 1-1/8 in. long Type S bugle head screws spaced 8 in. OC and located a min of 1/2 in. from side joints and 3 in. from the end joints. End joints secured to both resilient channels as shown in end joint detail.
When **Steel Framing Members** (Item 6M) are used, gypsum board installed with long dimension perpendicular to furring channels. Gypsum board secured with 1-1/8 in. long Type S bugle head screws spaced 8 in. OC and located a min of 1/2 in. from side joints and 3 in. from the end joints. End joints secured to both resilient channels as shown in end joint detail.
When **Steel Framing Members** (Item 6N) are used, gypsum board installed with long dimension perpendicular to furring channels. Gypsum board secured with 1-1/8 in. long Type S bugle head screws spaced 8 in. OC and located a min of 1/2 in. from side joints and 3 in. from the end joints. End joints secured to both resilient channels as shown in end joint detail.

**REGUPOL AMERICA** — Type SonusClip

6I. **Resilient Channels —** For Use With Item 7C - Formed from min 25 MSG galv. steel installed perpendicular to trusses and spaced 16 in. OC. Channels secured to each truss with 1-5/8 in. long Type S bugle head steel screws. Channels overlapped 4 in. at splices. Two channels, spaced 6 in. OC, oriented opposite each gypsum panel end joint. Additional channels shall extend min 6 in. beyond each side edge of panel. Insulation, Item 5C is applied over the resilient channel/gypsum panel ceiling membrane.

6J. **Steel Framing Members*** — (Optional, Not Shown) — As an alternate to Item 6.
a. **Furring Channels —** Formed of No. 25 MSG galv steel, nominal 2-1/2 in. wide by 7/8 in. deep, spaced as indicated in Item 6, perpendicular to the trusses. Channels secured to Cold Rolled Channels at every intersection with a 3/4 in. TEK screw through each furring channel leg. Ends of adjoining channels overlapped 12 in. and fastened together with two double strand No. 18 SWG galv steel wire ties, one at each end of overlap, or with two 3/4 in. TEK screws in each leg of the overlap section. Two furring channels used at end joints of gypsum board (Item 7), each extending a min of 6 in. beyond both side edges of the board.

b. **Cold Rolled Channels —** 1-1/2 in. by 1/2 in., formed from No. 16 ga. galv steel, positioned vertically and parallel to trusses, friction-fitted into the channel caddy on the Steel Framing Members (Item 6Jd) and secured with two 3/4 in. TEK screws. Adjoining lengths of cold rolled channels lapped min. 12 in. and secured along bottom legs with four 3/4 in. TEK screws and wire-tied together with two double strand 18 SWG galv steel wire ties, one at each end of overlap.

c. **Blocking —** Where truss design does not permit direct, full contact of the hanger bracket, a piece of nominal 2 by 4 in. lumber (blocking), min. 12 in. long to permit full contact of the hanger bracket, to be secured vertically to the side of the trusses at the top and bottom of the blocking at each Steel Framing Member (Item 6Jd) location with 16d nails or minimum 2-1/2 in. screws. d. Steel Framing Members* — Spaced 48 in. OC. max along truss, and secured to the truss on alternating trusses with two, #10 x 1-1/2 in. screws through mounting holes on the hanger bracket.
**PAC INTERNATIONAL L L C** — Type RSC-SI-CHC EZ Clip

6K. **Steel Framing Members*** — (Not Shown) — As an alternate to Item 6.
a. **Furring Channels —** Formed of No. 25 MSG galv steel, nominal 2-1/2 in. wide by 7/8 in. deep, spaced as indicated in Item 6, perpendicular to trusses and friction fit into Steel Framing Members (Item 6Kc). Ends of adjoining channels overlapped 6 in. and tied together with double strand of No. 18 SWG galv steel wire near each end of overlap or with two TEK screws along each leg of the 6 in. overlap. Two furring channels used at end joints of gypsum board (Item 7). Butt joint channels held in place by strong back channels placed upside down, on top of, and running perpendicular to primary furring channels, extending 6 in. longer than length of gypsum side joint. Strong back channels spaced maximum 48 in. OC. Strong back channels secured to every intersection of primary furring channels with four 7/16 in. pan head screws, two along each of the legs at intersections. Butt joint channels run perpendicular to strong back channels and shall be minimum 6 in. longer than length of joint, secured to strong back channels with 7/16 in. pan head screws, two along each of the legs at intersection with strong back channels.

b. **Blocking —** Where truss design does not permit direct, full contact of the hanger bracket, a piece of nominal 2 by 4 in. lumber (blocking), min. 12 in. long to permit full contact of the hanger bracket, to be secured vertically to the side of the trusses at the top and bottom of the blocking at each Steel Framing Member (Item 6Kc) location with 16d nails or minimum 2-1/2 in. screws.

c. **Steel Framing Members* —** Used to attach furring channels (Item 6Ka) to trusses. Clips spaced 48 in. OC and secured along truss webs at each furring channel intersection with min. 3/4 in. long self-drilling #10 x 1-1/2 in. screws through each of the provided hole locations. Furring channels are friction fitted into clips.
**PAC INTERNATIONAL L L C** — Type RSIC-S1-1 Ultra

6L. **Steel Framing Members*** — (Optional - Not Shown) — Used to attach resilient channels (Item 6) to trusses (Item 2). Clips spaced 48 in. OC and secured to trusses with one No. 8 x 2-1/2 in. coarse drywall screw through center grommet hole. Channels secured to clips with one #10 x 1/2 in. pan-head self-drilling screw. Ends of adjoining channels overlapped 6 in. and secured together with two #8 15 x 1/2 in. Philips Modified screws spaced 2-1/2 in. from the butt joint on either side. One edge of the extra channels will extend to an adjacent truss where it is secured with a clip.
**KEENE BUILDING PRODUCTS CO INC** — Type RC+ Assurance Clip

6M. **Steel Framing Members*** — (Optional, Not Shown) — Used as an alternate method to attach resilient channels to structural members. A resilient sound isolation accessory shall be used at each attachment point of the resilient channels and spaced max 24 in. O.C. Channel ends butted and centered under the structural members and attached with one accessory at each end. Additional accessories used to hold resilient channels that support the gypsum board end joints. The accessory envelopes the mounting edge of the resilient channel. The accessory and resilient channel are fastened to the structural members with the screws supplied with the accessory and per the accessory manufacturer's installation instructions. Gypsum Board butt joints staggered minimum 24 in. OC and Gypsum Board screws spaced 8 in. OC when used.
**PAC INTERNATIONAL L L C** — Type RC-1 Boost

6N. **Resilient Channels —** For use with **American Gypsum Co. Type AG-C gypsum board only.** Resilient channels, formed of 25 MSG thick galv steel, spaced 16 in. OC perpendicular to trusses. When insulation (Items 5, 5A, 5B) is applied over the resilient channel/gypsum board ceiling membrane, the spacing may remain at 16 in. OC. Channels secured to each truss with 1-1/4 in. long Type S bugle head steel screws. Channels overlapped 4 in. at splices. Two channels, spaced 6 in OC, oriented opposite each gypsum board end joint as shown in the above illustration. Additional channels shall extend 6 in beyond each side edge of board.

6O. **Steel Framing Members*** — (Optional, Not Shown. As an alternate to Item 6) — Furring channels and Steel Framing Members as described below:

a. **Furring Channels —** Formed of No. 25 MSG galv steel. 2-23/32 in. wide by 7/8 in. When there is no insulation installed in the concealed space the furring channels are spaced 24 in. OC max perpendicular to trusses. When insulation (Item 5) is secured to the underside of the subfloor the furring channels are spaced 16 in. OC max. When insulation (Item 5) is applied over the furring channel/gypsum panel ceiling membrane, the furring channels are spaced 12 in. OC max. Channels secured to trusses as described in Item 6Ob. Ends of adjoining channels are overlapped 6 in. and tied together with double strand of No. 18 SWG galv steel wire near each end of overlap. As an alternate, ends of adjoining channels may be overlapped 6 in. and secured together with two self-tapping #6 framing screws, min. 7/16 in. long at the midpoint of the overlap, with one screw on each flange of the channel. Additional clips required to hold furring channel that supports the wallboard butt joints, as described in Item 7.

b. **Steel Framing Members* —** Used to attach furring channels (Item 6Oa) to trusses (Item 2). Clips spaced 48 in. OC max with No. 8 x 2-1/2 in. course drywall screw through the center grommet. Furring channels are friction fitted into clips.
**CLARKDIETRICH BUILDING SYSTEMS** — Type ClarkDietrich Sound Clips

ALL REPORTS, PLANS, SPECIFICATIONS AND COMPUTER FILES RELATING TO THIS PROJECT ARE THE PROPERTY OF THE MARTIN ARCHITECTURAL GROUP. THE MARTIN ARCHITECTURAL GROUP RETAINS ALL COMMON LAW, STATUTE AND OTHER RESERVED RIGHTS INCLUDING THE COPYRIGHT THERETO. REPRODUCTION OF THE MATERIAL HEREIN OR SUBSTANTIAL USE WITHOUT WARITTEN PERMISSION OF THE MARTIN ARCHITECTURAL GROUP VIOLATES THE COPYRIGHT LAWS OF THE UNITED STATES AND WILL BE SUBJECT TO LEGAL PROSECUTION.
©2022, The Martin Architectural Group, P.C.

NIC

REGISTERED ARCHITECT COMMONWEALTH OF PENNSYLVANIA ROMANIC No. 404078

I hereby prepare these plans in accordance with the laws of Pennsylvania

Professional License Expiration

THE MARTIN ARCHITECTURAL GROUP, P.C.
ARCHITECTS AND LAND PLANNERS
A PROFESSIONAL CORPORATION
240 NORTH 22ND STREET, PHILADELPHIA, PA, 19103
P (215) 665-1600 F (215) 561-5064

| | |
|---|---|
| P.A.: | DREW ROMANIC |
| P.M.: | JASON DECAMPLI |
| DRAWN BY: | Author |
| PROJECT NO: | 1362-12 |

| NO. | REVISION | DATE |
|---|---|---|
| 1 | PERMIT SET | 12/20/22 |

FIRE RATED ASSEMBLIES
**Granite Run Apartment 02**
MIDDLETOWN TOWNSHIP, PA

SCALE:
DATE: 11/08/22

**A5.15**

©2022, The Martin Architectural Group, P.C.

UL Product iQ®

UL Solutions

# BXUV.U311 - Fire-resistance Ratings - ANSI/UL 263

Design/System/Construction/Assembly Usage Disclaimer

- Authorities Having Jurisdiction should be consulted in all cases as to the particular requirements covering the installation and use of UL Certified products, equipment, system, devices, and materials.
- Authorities Having Jurisdiction should be consulted before construction.
- Fire resistance assemblies and products are developed by the design submitter and have been investigated by UL for compliance with applicable requirements. The published information cannot always address every construction nuance encountered in the field.
- When field issues arise, it is recommended the first contact for assistance be the technical service staff provided by the product manufacturer noted for the design. Users of fire resistance assemblies are advised to consult the general Guide Information for each product category and each group of assemblies. The Guide Information includes specifics concerning alternate materials and alternate methods of construction.
- Only products which bear UL's Mark are considered Certified.

## Fire-resistance Ratings - ANSI/UL 263

BXUV - Fire Resistance Ratings - ANSI/UL 263 Certified for United States
BXUV7 - Fire Resistance Ratings - CAN/ULC-S101 Certified for Canada

See General Information for Fire-resistance Ratings - ANSI/UL 263 Certified for United States
Design Criteria and Allowable Variances

See General Information for Fire Resistance Ratings - CAN/ULC-S101 Certified for Canada
Design Criteria and Allowable Variances

## Design No. U311

October 4, 2022

**Bearing Wall Rating — 1 HR.**
**Finish Rating — 23 Min.**
**This design was evaluated using a load design method other than the Limit States Design Method (e.g., Working Stress Design Method). For jurisdictions employing the Limit States Design Method, such as Canada, a load restriction factor shall be used — See Guide BXUV or BXUV7**

*** Indicates such products shall bear the UL or cUL Certification Mark for jurisdictions employing the UL or cUL Certification (such as Canada), respectively.**

Last Updated on 2022-11-01

The appearance of a company's name or product in this database does not in itself assure that products so identified have been manufactured under UL Solutions' Follow - Up Service. Only those products bearing the UL Mark should be considered to be Certified and covered under UL Solutions' Follow - Up Service. Always look for the Mark on the product.

UL Solutions permits the reproduction of the material contained in Product iQ subject to the following conditions: 1. The Guide Information, Assemblies, Constructions, Designs, Systems, and/or Certifications (files) must be presented in their entirety and in a non-misleading manner, without any manipulation of the data (or drawings). 2. The statement "Reprinted from Product iQ with permission from UL Solutions" must appear adjacent to the extracted material. In addition, the reprinted material must include a copyright notice in the following format: "©2022 UL LLC."

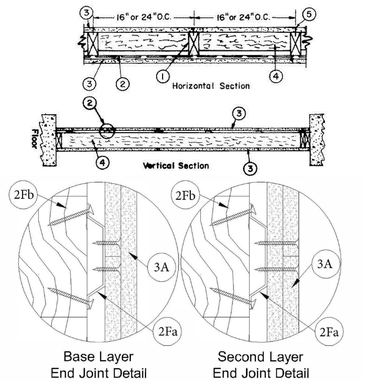
3

**CGC INC** — Types C, IP-X2, IPC-AR, ULIX

**CERTAINTEED GYPSUM INC** — Type LGFC-C/A

**GEORGIA-PACIFIC GYPSUM L L C** — Types 5, DAPC, TG-C

**NATIONAL GYPSUM CO** — Types -eXP-C, FSK-C, FSW-C, FSW-G

**PABCO BUILDING PRODUCTS L L C, DBA PABCO GYPSUM** — Type C or PG-C

**SAINT-GOBAIN GYPROC MIDDLE EAST FZE** — Type Gyproc FireStop, Gyproc FireStop MR, Gyproc FireStop M2TECH, Gyproc FireStop ACTIV'Air, Gyproc FireStop MR ACTIV'Air, Gyproc FireStop M2TECH ACTIV'Air, Gyproc DuraLine, Gyproc DuraLine MR, Gyproc DuraLine M2TECH, Gyproc DuraLine ACTIV'Air, Gyproc DuraLine MR ACTIV'Air, Gyproc DuraLine M2TECH ACTIV'Air

**THAI GYPSUM PRODUCTS PCL** — Type C

**UNITED STATES GYPSUM CO** — Types C, IP-X2, IPC-AR, ULIX

**USG BORAL DRYWALL SFZ LLC** — Type C

**USG MEXICO S A DE C V** — Types C, IP-X2, IPC-AR

3A. **Gypsum Board* —** (For use with Item 2F and 2I) - Any 5/8 in. thick, 4 ft. wide, Gypsum Board UL Classified for Fire Resistance (CKNX) eligible for use in Design No. G512. Two layers, applied vertically, and attached to steel studs (Item 2A) and furring (Item 2Fa or 2Ia). Vertical gypsum board side joints offset 24 inches between layers. Vertical joints staggered one stud cavity on opposite sides of studs. Type W steel screws used for wood framing. Type S steel screws used for steel framing. Attachment to furring channels - First layer – 1-1/4 in. long, 3, 6 and 18 inches from each board edge. Second layer - 1-7/8 in. long (2 in. with wood framing), spaced 12 inch OC with first fastener 2 in. from vertical board edge. Direct attachment to framing - First layer (to plates) – 1-1/4 in. long, 3, 6 and 18 inches from each board edge. First layer (to studs) – 1-1/4 in. long, 3, 6 and 18 inches board ends and 24 in. OC thereafter. Second layer - 1-7/8 in. long, spaced 2 inch from each board edge and 12 in. OC thereafter.

4. **Batts and Blankets* —** 3-1/2 in. thick mineral wool batts, placed to fill interior of wall, attached to the 4-in. face of the studs with staples placed 24 in. OC.
**JOHNS MANVILLE**

**ROCKWOOL** — Types Acoustical Fire Batts and AFB, min. density 1.69 pcf / 27.0 kg/m$^3$

**ROCKWOOL MALAYSIA SDN BHD** — Type Acoustical Fire Batts.

**ROCK WOOL MANUFACTURING CO** — Type Delta Board

**THERMAFIBER INC** — Type SAFB, SAFB FF.

3B. **Gypsum Board* —** (As an alternate to Item 4) - 5/8 in. thick, 4 ft wide. Screw attached on one side of wall to furring channels with 1 in. long, self-drilling, self-tapping steel screws spaced 7 in. OC, vertical joints located midway between studs and back blocked with furring channels, attached with 1 in. long, self-drilling, self-tapping screws, spaced 7in. OC, along each edge. Gypsum board on opposite side of wall attached directly to studs with 1-7/8 in. nails or screws spaced 7 in .OC.

**PANEL REY S A** — Type PRX2

4A. **Glass Fiber Insulation —** (As an alternate to Item 4) — 3 in. thick glass fiber batts bearing the UL Classification Marking as to Surface Burning and/or Fire Resistance, friction-fitted to fill the interior of the wall. See **Batts and Blankets** (BKNV or BZJZ) Categories for names of Classified companies.

4B. **Fiber, Sprayed* —** As an alternate to Batts and Blankets (Item 4) — Spray applied cellulose material. The fiber is applied with water to completely fill the enclosed cavity in accordance with the application instructions supplied with the product with a nominal dry density of 2.7 lb/ft$^3$. Alternate Application Method: The fiber is applied without water or adhesive at a nominal dry density of 3.5 lb/ft$^3$, in accordance with the application instructions supplied with the product.

**U S GREENFIBER L L C** — INS735, INS745, INS750LD and SANCTUARY for use with wet or dry application. INS515LD, INS541LD, INS735, INS765LD and INS773LD are to be used for dry application only

4C. **Fiber, Sprayed* —** As an alternate to Items 4, 4A, and 4B — Spray applied cellulose material. The fiber is applied with water to completely fill the enclosed cavity in accordance with the application instructions supplied with the product. Nominal dry density of 4.58 lb/ft$^3$.
**NU-WOOL CO INC** — Cellulose Insulation

4D. **Fiber, Sprayed* —** As an alternate to Batts and Blankets (Item 4) — Spray applied cellulose fiber. The fiber is applied with water to completely fill the enclosed cavity in accordance with the application instructions supplied with the product. The minimum dry density shall be 4.30 lbs/ft$^3$.
**INTERNATIONAL CELLULOSE CORP** — Celbar-RL

5. **Joints and Screw Heads —** Wallboard joints covered with paper tape and joint compound. Screw heads covered with joint compound. As an alternate, nom 3/32 in. thick gypsum veneer plaster may be applied to the entire surface of Classified veneer baseboard with joints reinforced with paper tape.

6. **Wall and Partition Facings and Accessories* —** (Optional, Not Shown) — Nominal 1/2 in. thick, 4 ft wide panels, for optional use as an additional layer on one or both sides of the assembly. Panels attached in accordance with manufacturer's recommendations. When the QR-500 or QR-510 panel is installed between the wood framing and the UL Classified gypsum board, the required UL Classified gypsum board layer(s) is/are to be installed as indicated as to fastener type and spacing, except that the required fastener length shall be increased by a minimum of 1/2 in. Not evaluated or intended as a substitute for the required layer(s) of UL Classified Gypsum Board.
**PABCO BUILDING PRODUCTS L L C, DBA PABCO GYPSUM** — Type QuietRock QR-500 and QR-510

7. **Mineral and Fiber Board —** (Optional, Not Shown) — 1/2 in. thick, 4 ft wide, square edge fiber boards applied vertically to studs on the side of the wood framing without the resilient channels, in between the wood framing and the UL Classified gypsum board (Item 3). Fiber boards installed with 1-1/4 in. long, Type W, bugle head, coarse thread gypsum board screws spaced 12 in. OC max, with the last screws spaced 2 in. and 6 in. from edge of board. Gypsum board (Item 3) installed horizontally or vertically and fastened through the fiber boards to wood framing with 2 in. long Type W coarse thread gypsum panel steel screws spaced a max 8 in. OC, with last screw 1 in. from edge of board. Gypsum board joints staggered from fiber board joints. Fiber boards not evaluated or intended as a substitute for the required layer of UL Classified Gypsum Board.
**BLUE RIDGE FIBERBOARD INC** — SoundStop

*** Indicates such products shall bear the UL or cUL Certification Mark for jurisdictions employing the UL or cUL Certification (such as Canada), respectively.**

Last Updated on 2022-10-04


The appearance of a company's name or product in this database does not in itself assure that products so identified have been manufactured under UL Solutions' Follow - Up Service. Only those products bearing the UL Mark should be considered to be Certified and covered under UL Solutions' Follow - Up Service. Always look for the Mark on the product.

UL Solutions permits the reproduction of the material contained in Product iQ subject to the following conditions: 1. The Guide Information, Assemblies, Constructions, Designs, Systems, and/or Certifications (files) must be presented in their entirety and in a non-misleading manner, without any manipulation of the data (or drawings). 2. The statement "Reprinted from Product iQ with permission from UL Solutions" must appear adjacent to the extracted material. In addition, the reprinted material must include a copyright notice in the following format: "©2022 UL LLC."


UL Product **iQ**®

UL Solutions

# BXUV.U336 - Fire-resistance Ratings - ANSI/UL 263

Design/System/Construction/Assembly Usage Disclaimer

- Authorities Having Jurisdiction should be consulted in all cases as to the particular requirements covering the installation and use of UL Certified products, equipment, system, devices, and materials.
- Authorities Having Jurisdiction should be consulted before construction.
- Fire resistance assemblies and products are developed by the design submitter and have been investigated by UL for compliance with applicable requirements. The published information cannot always address every construction nuance encountered in the field.
- When field issues arise, it is recommended the first contact for assistance be the technical service staff provided by the product manufacturer noted for the design. Users of fire resistance assemblies are advised to consult the general Guide Information for each product category and each group of assemblies. The Guide Information includes specifics concerning alternate materials and alternate methods of construction.
- Only products which bear UL's Mark are considered Certified.

## Fire-resistance Ratings - ANSI/UL 263

BXUV - Fire Resistance Ratings - ANSI/UL 263 Certified for United States
BXUV7 - Fire Resistance Ratings - CAN/ULC-S101 Certified for Canada

See General Information for Fire-resistance Ratings - ANSI/UL 263 Certified for United States
Design Criteria and Allowable Variances

See General Information for Fire Resistance Ratings - CAN/ULC-S101 Certified for Canada
Design Criteria and Allowable Variances

Design No. **U336**

February 16, 2022

**Exposed to fire from separation Wall side only**
**Nonbearing Wall Rating — 2 Hr (Separation Wall, See Items 1, 2 and 3)**
**Bearing Wall Rating - 2 Hr (Protected Wall, See Items 4 and 4A)**
**Nonbearing Wall Rating - 2 Hr (Protected Wall, See Item 4B)**
**Finish Rating — 120 Min**
*** Indicates such products shall bear the UL or cUL Certification Mark for jurisdictions employing the UL or cUL Certification (such as Canada), respectively.**

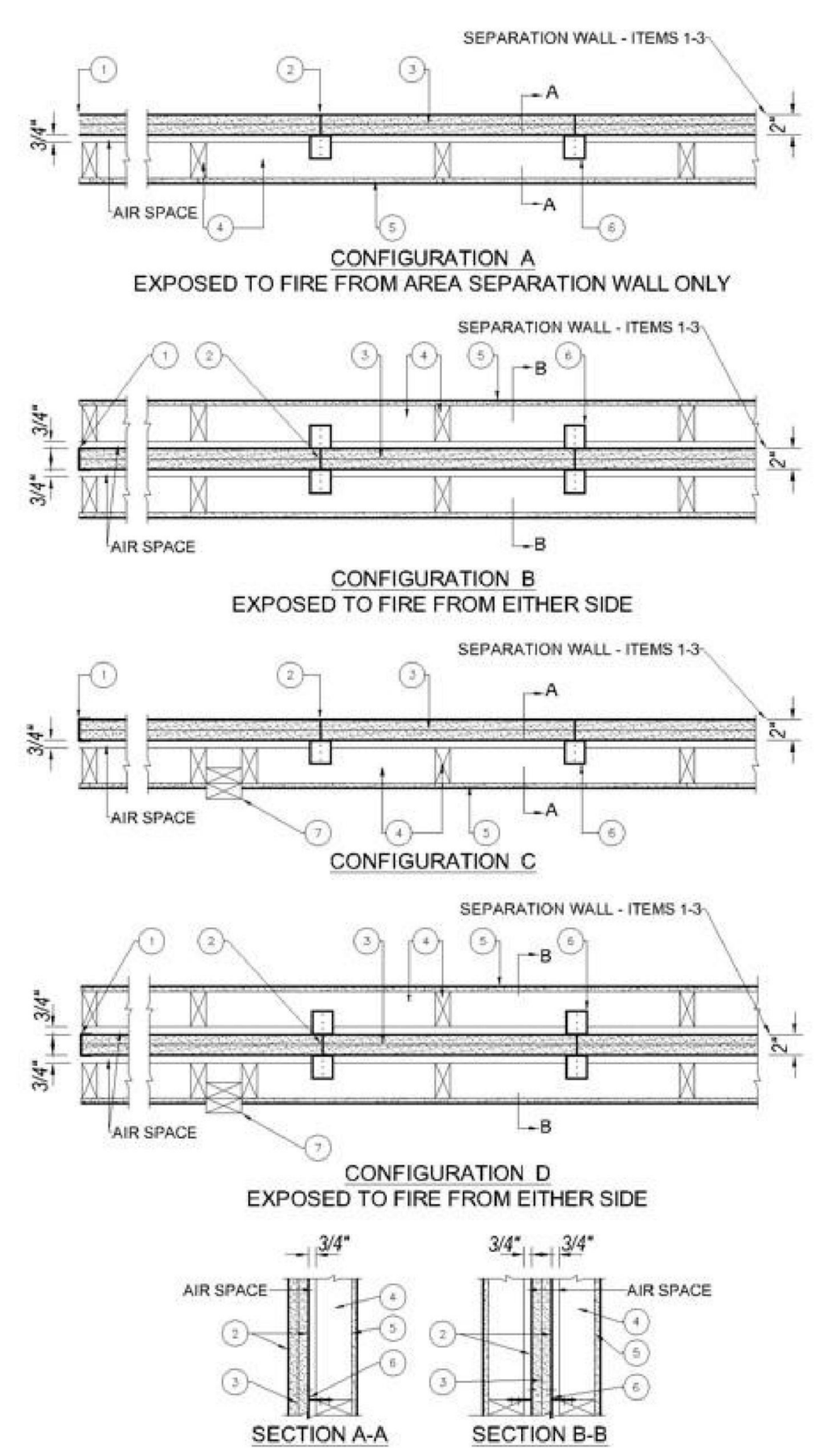


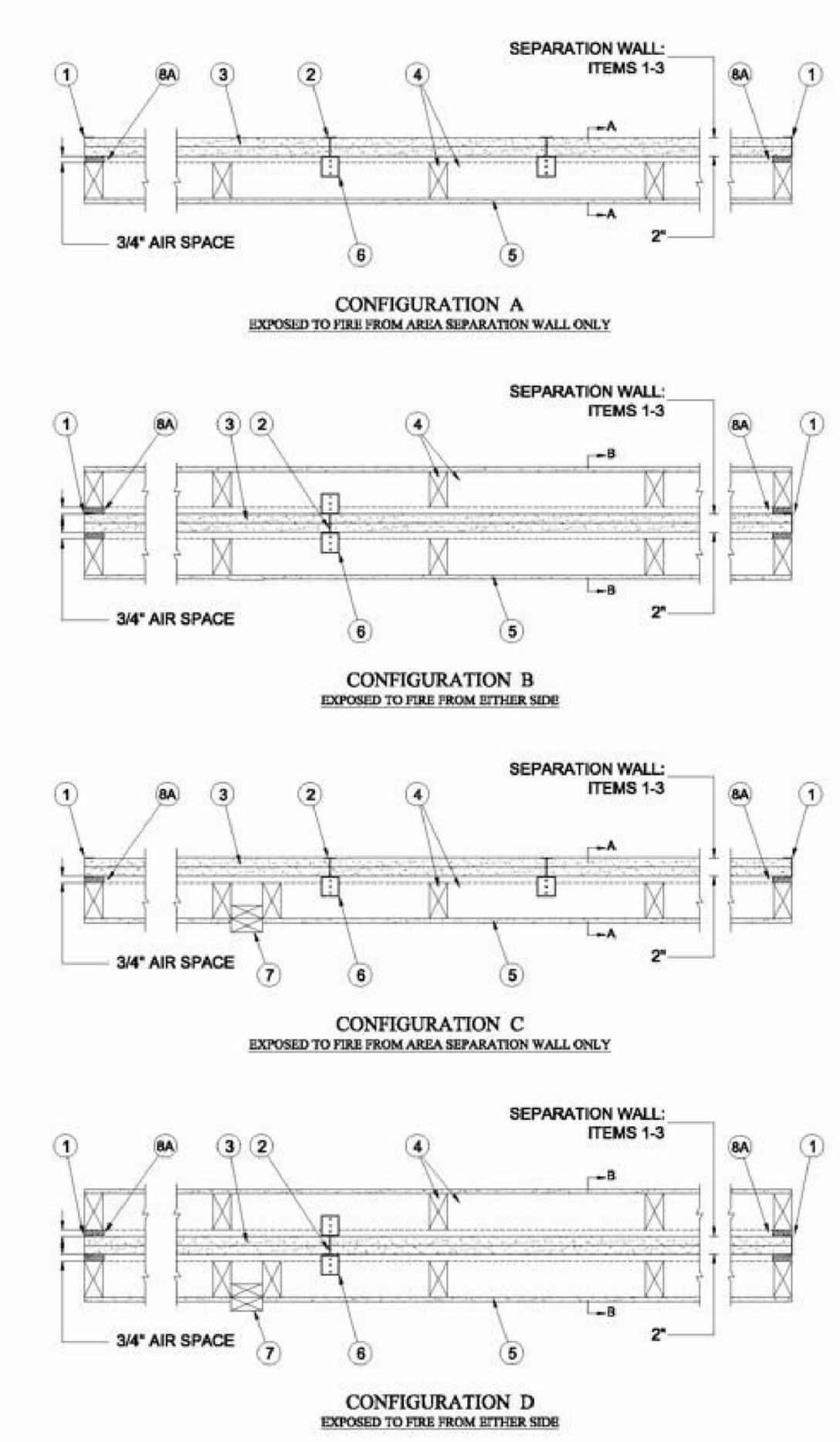


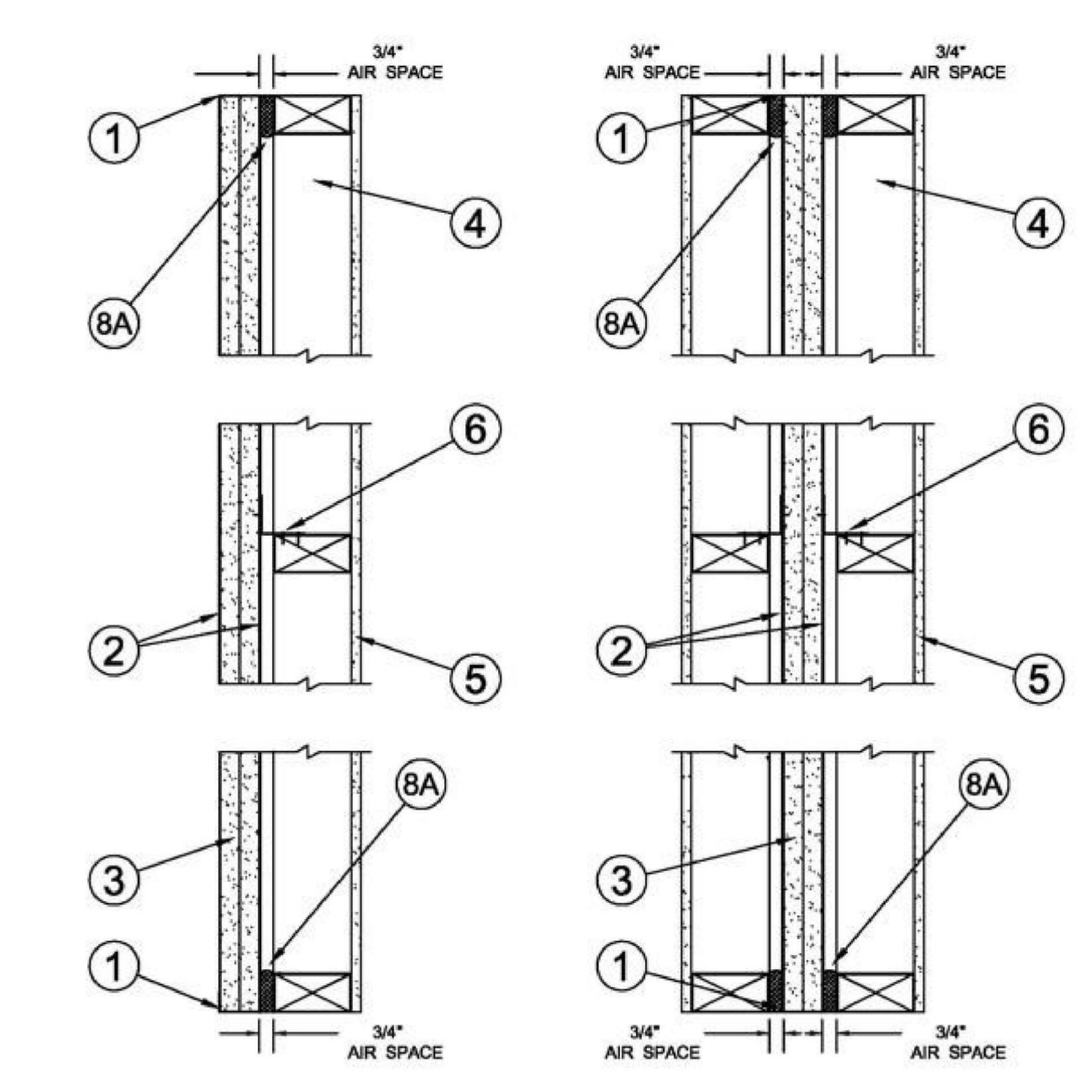


SECTION A-A SECTION B-B

**SEPARATION WALL: (Max Height - 66 ft)**

1. **Floor, Intermediate or Top Wall —** 2 in. wide channel shaped with 1 in. long legs formed from No. 25 MSG galv steel, secured with suitable fasteners spaced 24 in. OC.

2. **Metal Studs —** Steel members formed from No. 25 MSG galv steel having "H" -shaped flanged spaced 24 in. OC; overall depth 2 in. and flange width 1-3/8 in.

3. **Gypsum Board* —** Two layers of 1 in. thick gypsum board liner panels, supplied in nom 24 in. widths. Vertical edges of panels friction fitted into "H" -shaped studs.
**CGC INC** — Type SLX

**UNITED STATES GYPSUM CO** — Type SLX

**USG BORAL DRYWALL SFZ LLC** — Type SLX

**USG MEXICO S A DE C V** — Type SLX

**PROTECTED WALL:** (Bearing or Nonbearing Wall). When Bearing, Load Restricted for Canadian Applications — See Guide BXUV7.

4. **Wood Studs —** Nom 2 by 4 in. max spacing 24 in. OC. Studs cross braced at mid-height where necessary for clip attachment. Min 3/4 in. separation between wood framing and fire separation wall.

4A. **Steel Studs —** (As an alternate to Item 4, Not Shown) — For Bearing Wall Rating - Corrosion protected steel studs, min No. 20 MSG (0.0329 in., min bare metal thickness) steel or min 3-1/2 in. wide, min No. 20 GSG (0.036 in. thick) galv steel or No. 20 MSG (0.033 in. thick) primed steel, cold formed, shall be designed in accordance with the current edition of the Specification for the Design of Cold-Formed Steel Structural Members by the American Iron and Steel Institute. All design details enhancing the structural integrity of the wall assembly, including the axial design load of the studs, shall be as specified by the steel stud designer and/or producer, and shall meet the requirements of all applicable local code agencies. The max stud spacing of wall assemblies shall not exceed 24 in. OC. Studs attached to floor and ceiling tracks with 1/2 in. long Type S-12 steel screws on both sides of studs or by welded or bolted connections designed in accordance with the AISI specifications. Top and bottom tracks shall consist of steel members, min No. 20 MSG (0.0329 in., min bare metal thickness) steel or min No. 20 GSG (0.036 in. thick) galv steel or No. 20 MSG (0.033 in. thick) primed steel, that provide a sound structural connection between steel studs, and to adjacent assemblies such as a floor, ceiling, and/or other walls. Attached to floor and ceiling assemblies with steel fasteners spaced not greater than 24 in. O.C. Studs cross-braced with stud framing at midheight where necessary for clip attachment. Min 3/4 in. separation between steel framing and area separation wall. Finish rating has not been evaluated for Steel Studs.

4B **Steel Studs —** As an alternate to Items 4 and 4A, for use in Configuration B only, Not Shown) — For Nonbearing Wall Rating - Channel shaped, fabricated from min 25 MSG corrosion-protected steel, min 3-1/2 in. wide, min 1-1/4 in. flanges and 1/4 in. return, spaced a max of 24 in. OC. Studs to be cut 3/8 to 3/4 in. less than assembly height. Top and bottom tracks shall be channel shaped, fabricated from min 25 MSG corrosion-protected steel, min width to accommodate stud size, with min 1 in. long legs, attached to floor and ceiling with fasteners 24 in. OC max. Studs cross-braced with stud framing at midheight where necessary for clip attachment. Min 3/4 in. separation between steel framing and area separation wall. Finish rating has not been evaluated for Steel Studs.

5. **Gypsum Board —** Classified or Unclassified — Min 1/2 in. thick, 4 ft wide, applied either horizontally or vertically. Gypsum board attached to studs with 1-1/4 in. long steel drywall nails spaced 8 in. OC. Vertical joints located over studs. (Optional) Joints covered with paper tape and joint compound. Nail heads covered with joint compound.

6. **Attachment Clips —** Aluminum angle, 0.063 in. thick, 2 in. wide with 2 in. and 2-1/4 in. legs. Clips secured with Type S screws 3/8 in. long to "H" studs and with Type W screws 1-1/4 in. long to wood framing through holes provided in clip.

6A. Clip placement (Item 6) for separation walls up to 23 ft high. Space clips a max of 10 ft OC vertically between wood framing and "H" studs.

6B. Clip placement (Item 6) for separation walls up to 44 ft high. Space clips as described in Item 6A for upper 24 ft. Remaining wall area below requires clips spaced a max 5 ft OC vertically between wood framing and "H" studs.

6C. Clip placement (Item 6) for separation walls up to 66 ft high: Space clips as described in Item 6A for upper 24 ft. Space clips as described in item 6B for next 20 ft. below the upper 24 ft. Remaining wall area below requires clips spaced a max of 40 in. OC vertically between wood framing and "H" studs.

7. **Non-Bearing Wall Partition Intersection —** (Optional) — Two nominal 2 by 4 in. stud or nominal 2 by 6 in. stud nailed together with two 3in. long 10d nails spaced a max. 16 in. OC. vertically and fastened to one side of the minimum 2 by 4 in. stud with 3 in. long 10d nails spaced a max 16 in. OC. vertically. Intersection between partition wood studs to be flush with the 2 by 4 in. studs. The wall partition wood studs are to be framed with a second 2 by 4 in. wood stud fastened with 3 in. long 10d nails spaced a max. 16 in. OC. vertically. Maximum one non-bearing wall partition intersection per stud cavity. Non-bearing wall partition stud depth shall be at a minimum equal to the depth of the wall.

8. **Caulking and Sealants* —** (Optional - Intended for use as an air barrier - Not evaluated as fireblocking) A bead of sealant applied around the partition perimeter, and at the interface between wood or steel framing and gypsum board panels to create an air barrier.
**KNAUF INSULATION LLC** — Type ECOSEAL™ Plus

8A. **Caulking and Sealants* —** (Optional - Intended for use as an air barrier - Not evaluated as fireblocking) - A bead of sealant applied around the partition perimeter in the 3/4 in. air space between wood framing (Item 4) and shaftliner panels (Item 3) to create an air barrier.
**DUPONT DE NEMOURS, INC.** — Great Stuff Gaps & Cracks, Great Stuff Pro Gaps & Cracks, Great Stuff Pro Window & Door

**ICP CONSTRUCTION INC**— Fireblock, Window & Door, Insulating Foam Sealant, Multi-Purpose, HC Sealants, Black Foam Sealant, Extreme, Window & Door Extreme, Fast Foam, Gun Foam, and Straw Foam

*** Indicates such products shall bear the UL or cUL Certification Mark for jurisdictions employing the UL or cUL Certification (such as Canada), respectively.**

Last Updated on 2022-02-16


The appearance of a company's name or product in this database does not in itself assure that products so identified have been manufactured under UL Solutions' Follow - Up Service. Only those products bearing the UL Mark should be considered to be Certified and covered under UL Solutions' Follow - Up Service. Always look for the Mark on the product.

UL Solutions permits the reproduction of the material contained in Product iQ subject to the following conditions: 1. The Guide Information, Assemblies, Constructions, Designs, Systems, and/or Certifications (files) must be presented in their entirety and in a non-misleading manner, without any manipulation of the data (or drawings). 2. The statement "Reprinted from Product iQ with permission from UL Solutions" must appear adjacent to the extracted material. In addition, the reprinted material must include a copyright notice in the following format: "©2022 UL LLC."



ALL REPORTS, PLANS, SPECIFICATIONS AND COMPUTER FILES RELATING TO THIS PROJECT ARE THE PROPERTY OF THE MARTIN ARCHITECTURAL GROUP. THE MARTIN ARCHITECTURAL GROUP RETAINS ALL COMMON LAW, STATUTE AND OTHER RESERVED RIGHTS INCLUDING THE COPYRIGHT THERETO. REPRODUCTION OF THE MATERIAL HEREIN OR SUBSTANTIAL USE WITHOUT WRITTEN PERMISSION OF THE MARTIN ARCHITECTURAL GROUP VIOLATES THE COPYRIGHT LAWS OF THE UNITED STATES AND WILL BE SUBJECT TO LEGAL PROSECUTION.
©2022, The Martin Architectural Group, P.C.


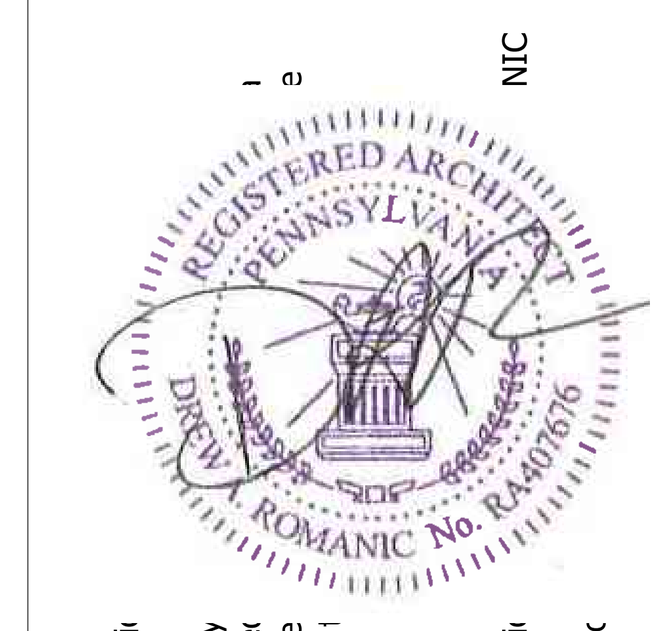


NIC

Professi
I hereby prepare duly lice laws of
Professi License Expiratio


THE MARTIN ARCHITECTURAL GROUP, P.C.
ARCHITECTS AND LAND PLANNERS
A PROFESSIONAL CORPORATION
240 NORTH 22ND STREET, PHILADELPHIA, PA, 19103
P (215) 665-1080 F (215) 561-5064


| | |
|---|---|
| P.A.: | DREW ROMANIC |
| P.M.: | JASON DECAMPLI |
| DRAWN BY: | Author |
| PROJECT NO: | 1362-12 |

| NO. | REVISION | DATE |
|---|---|---|
| 1 | PERMIT SET | 12/20/22 |

FIRE RATED ASSEMBLIES
**Granite Run Apartment 02**
MIDDLETOWN TOWNSHIP, PA

| | |
|---|---|
| SCALE: | |
| DATE: | 11/08/22 |

**A5.16**


©2022, The Martin Architectural Group, P.C.


Printed: 1/13/2023 4:52:01 PM

UL Product iQ®

# BXUV.N735 - Fire-resistance Ratings - ANSI/UL 263

Design/System/Construction/Assembly Usage Disclaimer

- Authorities Having Jurisdiction should be consulted in all cases as to the particular requirements covering the installation and use of UL Certified products, equipment, system, devices, and materials.
- Authorities Having Jurisdiction should be consulted before construction.
- Fire resistance assemblies and products are developed by the design submitter and have been investigated by UL for compliance with applicable requirements. The published information cannot always address every construction nuance encountered in the field.
- When field issues arise, it is recommended the first contact for assistance be the technical service staff provided by the product manufacturer noted for the design. Users of fire resistance assemblies are advised to consult the general Guide Information for each product category and each group of assemblies. The Guide Information includes specifics concerning alternate materials and alternate methods of construction.
- Only products which bear UL's Mark are considered Certified.

## BXUV - Fire Resistance Ratings - ANSI/UL 263 Certified for United States

## BXUV7 - Fire Resistance Ratings - CAN/ULC-S101 Certified for Canada

See General Information for Fire-resistance Ratings - ANSI/UL 263 Certified for United States
Design Criteria and Allowable Variances

See General Information for Fire Resistance Ratings - CAN/ULC-S101 Certified for Canada
Design Criteria and Allowable Variances

**Design No. N735**

October 08, 2019

**Restrained Beam Ratings — 1, 1-1/2, 2, 3, 4 Hr (See Items 6 and 6A)**

**Unrestrained Beam Ratings — 1, 1-1/2, 2, 3, 4 Hr (See Items 6 and 6A)**

**This design was evaluated using a load design method other than the Limit States Design Method (e.g., Working Stress Design Method). For jurisdictions employing the Limit States Design Method, such as Canada, a load restriction factor shall be used — See Guide BXUV or BXUV7**

*** Indicates such products shall bear the UL or cUL Certification Mark for jurisdictions employing the UL or cUL Certification (such as Canada), respectively.**

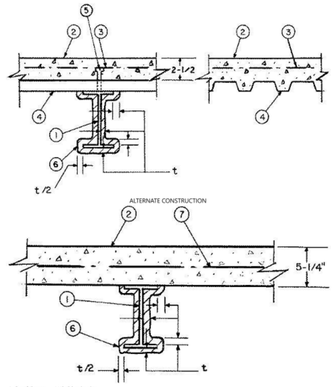


1. **Steel Beam —** W8x28 min size.

2. **Normal Weight or Lightweight Concrete —** Compressive strength 3000 psi. Either carbonate or siliceous aggregate may be used. Unit weight 138 to 155 pcf. For lightweight concrete, unit weight 112 pcf.

3. **Welded Wire Fabric —** 6x6, W1.4xW1.4.

4. **Steel Floor and Form Units —** 1-1/2, 2 or 3 in. deep fluted, cellular or corrugated units.

5. **Shear Connector (Optional) —** Studs, 3/4 in. diam. Headed type or equivalent per AISC specifications welded to top flange of beam through steel floor units.

6. **Spray-Applied Resistive Material* —** See tables below for appropriate thicknesses. Prepared by mixing with water and spray-applied in one or more coats to beam surfaces which must be clean and free of dirt, loose scale, and oil. Flute areas above the beam shall be filled with spray-applied resistive material. Min average density of 17.5 pcf with min individual density of 17.0 pcf. For method of density determination, see Design Information Section, Sprayed Material.

| Rating Hr | Restrained | Unrestrained |
|---|---|---|
| 1 | 3/8 | 3/8 |
| 1-1/2 | 7/16 | 11/16 |
| 2 | 3/4 | 1 |
| 3 | 1- 1/4 | 1- 5/8 |
| 4 | 2- 1/4 | 2- 1/4 |

The thicknesses of Spray-Applied Fire Resistive Materials shown in the table below are applicable when the thickness on the tips of the beam's lower flange is reduced to one-half that shown in the table but not less than 3/8 in.

| Rating Hr | Restrained | Unrestrained |
|---|---|---|
| 1 | 1/2 | 1/2 |
| 1-1/2 | 3/4 | 1 |
| 2 | 1- 1/4 | 1- 3/8 |
| 3 | 1- 3/4 | 2- 1/8 |

The thicknesses of Spray-Applied Fire Resistive Materials shown in the table below are applicable when the beam is supporting only fluted floor units and the thickness on the tips of the beam's lower flange edges is reduced to one-half that shown in the table but not less than 3/8 in.

| Rating Hr | Restrained | Unrestrained |
|---|---|---|
| 1 | 1/2 | 1/2 |
| 1-1/2 | 3/4 | 3/4 |
| 2 | 15/16 | 1 |
| 3 | 1- 9/16 | 1- 9/16 |
| 4 | 2- 1/4 | 2- 1/4 |

**ISOLATEK INTERNATIONAL** — Type 280.

6A. **Spray-Applied Fire Resistive Materials* —** As an alternate to Item 6 — See tables below for appropriate thicknesses. Prepared by mixing with water and spray-applied in one or more coats to beam surfaces which must be clean and free of dirt, loose scale and oil. Flute areas above the beam shall be filled with Spray-Applied Fire Resistive Materials. Min avg and min individual density of 15 and 14 pcf, respectively, for Types 300, 300AC, 300ES, 300HS, 300N, 300D, 3000ES and SB. For Types 400AC and 400ES min average and min individual density of 22 and 19 pcf, respectively. For method of density determination, see Design Information Section, Sprayed Material.

| Rating Hr | Restrained | Unrestrained |
|---|---|---|
| 1 | 3/8 | 3/8 |
| 1-1/2 | 7/16 | 11/16 |
| 2 | 3/4 | 1 |
| 3 | 1- 1/4 | 1- 5/8 |

The thicknesses of Spray-Applied Fire Resistive Materials shown in the table below are applicable when the thickness on the tips of the beam's lower flange is reduced to one-half that shown in the table but not less than 3/8 in.

| Rating Hr | Restrained | Unrestrained |
|---|---|---|
| 1 | 1/2 | 1/2 |
| 1-1/2 | 3/4 | 1 |
| 2 | 1- 1/4 | 1- 3/8 |
| 3 | 1- 3/4 | 2- 1/8 |

The thicknesses of Spray-Applied Fire Resistive Materials shown in the table below are applicable when the beam is supporting only fluted floor units and the thickness on the tips of the beam's lower flange edges is reduced to one-half that shown in the table but not less than 3/8 in.

| Rating Hr | Restrained | Unrestrained |
|---|---|---|
| 1 | 1/2 | 1/2 |
| 1-1/2 | 3/4 | 3/4 |
| 2 | 15/16 | 1 |
| 3 | 1- 9/16 | 1- 9/16 |

**BERLIN CO LTD** — Types 300, 300ES, 300N or SB.

**GREENTECH ASIA PACIFIC SDN BDH** — Types 300, 300ES, or 300HS

**GREENTECH THERMAL INSULATION PRODUCTS MFG CO L L C** — Types 300, 300AC, or 400AC.

**ISOLATEK INTERNATIONAL** — Types 300, 300AC, 300ES, 300HS, 300N, SB, 400AC, 400ES, 3000 or 3000ES.

**NEWKEM PRODUCTS CORP** — Types 300, 300ES, 300N, or Type SB.

6B. **Spray-Applied Fire Resistive Materials* —** As an alternate to Item 6 and 6A — See tables below for appropriate thicknesses.
Prepared by mixing with water and spray-applied in one or more coats to beam surfaces which must be clean and free of dirt, loose scale and oil. Flute areas above the beam shall be filled with Spray-Applied Fire Resistive Materials. Min avg and min individual density of 17.5 and 16 pcf, respectively, for Type 300TW. Min average and min individual density of 22 and 19 pcf, respectively, for Type 400. For method of density determination, see Design Information Section, Sprayed Material.

| Rating Hr | Restrained | Unrestrained |
|---|---|---|
| 1 | 3/8 | 3/8 |
| 1-1/2 | 7/16 | 11/16 |
| 2 | 3/4 | 1 |
| 3 | 1-1/4 | 1-5/8 |

The thicknesses of Spray-Applied Fire Resistive Materials shown in the table below are applicable when the thickness on the tips of the beam's lower flange is reduced to one-half that shown in the table but not less than 3/8 in.

| Rating Hr | Restrained | Unrestrained |
|---|---|---|
| 1 | 1/2 | 1/2 |
| 1-1/2 | 3/4 | 1 |
| 2 | 1-1/4 | 1-3/8 |
| 3 | 1-3/4 | 2-1/8 |

The thicknesses of Spray-Applied Fire Resistive Materials shown in the table below are applicable when the beam is supporting only fluted floor units and the thickness on the tips of the beam's lower flange edges is reduced to one-half that shown in the table but not less than 3/8 in.

| Rating Hr | Restrained | Unrestrained |
|---|---|---|
| 1 | 1/2 | 1/2 |
| 1-1/2 | 3/4 | 1 |
| 2 | 1-1/4 | 1-3/8 |
| 3 | 1-3/4 | 2-1/8 |

**GREENTECH ASIA PACIFIC SDN BDH** — Type 400

**GREENTECH THERMAL INSULATION PRODUCTS MFG CO L L C** — Type 400.

**ISOLATEK INTERNATIONAL** — Types 300TW or 400.

**NEWKEM PRODUCTS CORP** — Type 400.

7. **Steel Reinforcement —** As required by the latest ACI 318 Building Code for reinforced concrete. Connected to beam top flange.

*** Indicates such products shall bear the UL or cUL Certification Mark for jurisdictions employing the UL or cUL Certification (such as Canada), respectively.**

Last Updated on 2019-10-08

The appearance of a company's name or product in this database does not in itself assure that products so identified have been manufactured under UL Solutions' Follow - Up Service. Only those products bearing the UL Mark should be considered to be Certified and covered under UL Solutions' Follow - Up Service. Always look for the Mark on the product.

ALL REPORTS, PLANS, SPECIFICATIONS AND COMPUTER FILES RELATING TO THIS PROJECT ARE THE PROPERTY OF THE MARTIN ARCHITECTURAL GROUP. THE MARTIN ARCHITECTURAL GROUP RETAINS ALL COMMON LAW, STATUTE AND OTHER RESERVED RIGHTS INCLUDING THE COPYRIGHT THERETO. REPRODUCTION OF THE MATERIAL HEREIN OR SUBSTANTIAL USE WITHOUT WRITTEN PERMISSION OF THE MARTIN ARCHITECTURAL GROUP VIOLATES THE COPYRIGHT LAWS OF THE UNITED STATES AND WILL BE SUBJECT TO LEGAL PROSECUTION.
©2022, The Martin Architectural Group, P.C.

THE MARTIN ARCHITECTURAL GROUP, P.C.
ARCHITECTS AND LAND PLANNERS
A PROFESSIONAL CORPORATION
240 NORTH 22ND STREET, PHILADELPHIA, PA, 19103
P (215) 665-1600 F (215) 561-5064

| | |
|---|---|
| P.A.: | DREW ROMANIC |
| P.M.: | JASON DECAMPLI |
| DRAWN BY: | Author |
| PROJECT NO: | 1362-12 |

| NO. | REVISION | DATE |
|---|---|---|
| 1 | PERMIT SET | 12/20/22 |

FIRE RATED ASSEMBLIES
**Granite Run Apartment 02**
MIDDLETOWN TOWNSHIP, PA

SCALE:
DATE: 12/20/22

**A5.17**

©2022, The Martin Architectural Group, P.C.

Printed: 1/13/2023 4:52:03 PM

UL Product iQ®

# BXUV.X771 - Fire-resistance Ratings - ANSI/UL 263

Design/System/Construction/Assembly Usage Disclaimer

- Authorities Having Jurisdiction should be consulted in all cases as to the particular requirements covering the installation and use of UL Certified products, equipment, system, devices, and materials.
- Authorities Having Jurisdiction should be consulted before construction.
- Fire resistance assemblies and products are developed by the design submitter and have been investigated by UL for compliance with applicable requirements. The published information cannot always address every construction nuance encountered in the field.
- When field issues arise, it is recommended the first contact for assistance be the technical service staff provided by the product manufacturer noted for the design. Users of fire resistance assemblies are advised to consult the general Guide Information for each product category and each group of assemblies. The Guide Information includes specifics concerning alternate materials and alternate methods of construction.
- Only products which bear UL's Mark are considered Certified.

## BXUV - Fire Resistance Ratings - ANSI/UL 263 Certified for United States

## BXUV7 - Fire Resistance Ratings - CAN/ULC-S101 Certified for Canada

See General Information for Fire-resistance Ratings - ANSI/UL 263 Certified for United States
Design Criteria and Allowable Variances

See General Information for Fire Resistance Ratings - CAN/ULC-S101 Certified for Canada
Design Criteria and Allowable Variances

**Design No. X771**

October 26, 2017

**Ratings — 3/4, 1, 1-1/2, 2, 3 and 4 h**

*** Indicates such products shall bear the UL or cUL Certification Mark for jurisdictions employing the UL or cUL Certification (such as Canada), respectively.**

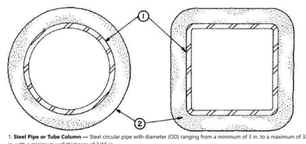

1. **Steel Pipe or Tube Column —** Steel circular pipe with diameter (OD) ranging from a minimum of 3 in. to a maximum of 32 in. with a minimum wall thickness of 3/16 in.
Steel square or rectangular tube with outside wall dimensions ranging from a minimum 3 in. to a maximum of 32 in. and a minimum wall thickness of 3/16 in.

The A/P ratio of the steel pipe or tube (see Item 2) shall range from 0.18 to 2.0.

2. **Spray-Applied Fire Resistive Materials* —** Applied by mixing with water and spraying in one or more coats to steel surfaces which must be clean and free of dirt, loose scale and oil. Min avg and ind density of 15/14 pcf respectively. Min avg and min ind density of 22/19 pcf respectively for Types Z-106, Z-106/G. Min avg and min ind density of 19/18 pcf respectively for Types 7GP and 7HD. For method of density determination, see Design Information Section, preceding these designs.
The hourly rating of the structural member is dependent upon the ratio of A/P and the thickness of Spray-Applied Fire Resistive Materials, where A is the cross sectional area of the pipe or tube and P is the heated perimeter.

The A/P ratio of a circular pipe is determined by:

$$A/P\ pipe = \frac{\pi (d - t)}{d}$$

Where:

d = the outer diameter of the pipe (in.)

t = the wall thickness of the pipe (in.)

The A/P ratio of a rectangular or square tube is determined by:

$$A/P\ tube = \frac{t\,(a + b - 2t)}{a \times b}$$

Where:

a = the outer width of the tube (in.)

b = the outer length of the tube (in.)

t = the wall thickness of the tube (in.)

The thickness of Spray-Applied Fire Resistive Materials for ratings of 3/4, 1, 1-1/2, 2, 3 and 4 h of a steel pipe or tube can be determined by the equation:

$$h = \frac{R - 0.20}{4.43\ (A/P)}$$

Where:

R = the hourly rating (hrs).

h = the thickness of Spray-Applied Fire Resistive Materials, minimum 1/4 in., maximum 3-7/8 in.

**ARABIAN VERMICULITE INDUSTRIES** — Types MK-6/CBF, MK-6/ED, MK-6/HY, MK-6s, Sonophone 1, Sonophone 5, Z-106, Z-106/G.

**GCP KOREA INC** — Types MK-6/CBF, MK-6/ED, MK-6/HY, MK-6s, Monokote Acoustic 1, Monokote Acoustic 5, Z-106, Z-106/G.

**PYROK INC** — Type LD.

**SOUTHWEST FIREPROOFING PRODUCTS CO** — Types 4, 5, SEF, SGP, SAR, SGP/AR, SEF/AR, SMD/AR, SMD, 7GP, 7HD, BEF, BGP, BMD, 9EF, 9GP, 9MD.

**GCP APPLIED TECHNOLOGIES INC** — Types MK-6/HY, MK-6s, Monokote Acoustic 1, Monokote Acoustic 5, RG, Z-106, Z-106/G.

*** Indicates such products shall bear the UL or cUL Certification Mark for jurisdictions employing the UL or cUL Certification (such as Canada), respectively.**

Last Updated on 2017-10-26

The appearance of a company's name or product in this database does not in itself assure that products so identified have been manufactured under UL Solutions' Follow - Up Service. Only those products bearing the UL Mark should be considered to be Certified and covered under UL Solutions' Follow - Up Service. Always look for the Mark on the product.

UL Solutions permits the reproduction of the material contained in Product iQ subject to the following conditions: 1. The Guide Information, Assemblies, Constructions, Designs, Systems, and/or Certifications (files) must be presented in their entirety and in a non-misleading manner, without any manipulation of the data (or drawings). 2. The statement "Reprinted from Product iQ with permission from UL Solutions" must appear adjacent to the extracted material. In addition, the reprinted material must include a copyright notice in the following format: "©2022 UL LLC."

UL Product iQ®

# BXUV.X772 - Fire-resistance Ratings - ANSI/UL 263

Design/System/Construction/Assembly Usage Disclaimer

- Authorities Having Jurisdiction should be consulted in all cases as to the particular requirements covering the installation and use of UL Certified products, equipment, system, devices, and materials.
- Authorities Having Jurisdiction should be consulted before construction.
- Fire resistance assemblies and products are developed by the design submitter and have been investigated by UL for compliance with applicable requirements. The published information cannot always address every construction nuance encountered in the field.
- When field issues arise, it is recommended the first contact for assistance be the technical service staff provided by the product manufacturer noted for the design. Users of fire resistance assemblies are advised to consult the general Guide Information for each product category and each group of assemblies. The Guide Information includes specifics concerning alternate materials and alternate methods of construction.
- Only products which bear UL's Mark are considered Certified.

## BXUV - Fire Resistance Ratings - ANSI/UL 263 Certified for United States

## BXUV7 - Fire Resistance Ratings - CAN/ULC-S101 Certified for Canada

See General Information for Fire-resistance Ratings - ANSI/UL 263 Certified for United States
Design Criteria and Allowable Variances

See General Information for Fire Resistance Ratings - CAN/ULC-S101 Certified for Canada
Design Criteria and Allowable Variances

**Design No. X772**

July 12, 2019

**Ratings — 1, 1-1/2, 2, 3 and 4 h.**

*** Indicates such products shall bear the UL or cUL Certification Mark for jurisdictions employing the UL or cUL Certification (such as Canada), respectively.**




5. **Spray-Applied Fire Resistive Materials* —** Applied by mixing with water and spraying in more than one coat to the thicknesses shown below, to steel surfaces which are clean and free of dirt, loose scale, and oil. Min avg and min ind density of 15/14 pcf respectively. Min avg and min ind density of 22/19 pcf respectively for Types Z-106, Z-106/G, Z-106/HY. Min avg and min ind density of 19/18 pcf respectively for Types 7GP and 7HD. Min avg and min ind density of 40/36 pcf respectively for Types Z-146, Z-146FC and Z-146T cementitious mixture. Min avg and min ind density of 50/45 pcf respectively for Types Z-156, Z-156T and Z-156FC. For method of density determination, see Design Information Section, Sprayed Material.
The thickness of Spray-Applied Fire Resistive Materials to be applied to all surfaces of the column (item 1) required for rating periods of 1 h, 1-1/2 h, 2 h, 3 h, 4 h may be determined by the equation:

$$h = \frac{R}{1.05\ (W/D) + 0.61}$$

Where:

h = Spray-Applied Fire Resistive Materials thickness in the range 0.25-3.875 in.

R = Fire resistance rating in hours (1 - 4 h)

D = Heated perimeter of steel column in inches

W = Weight of steel column in lbs per foot

W/D = 0.33 to 6.62

As an alternate to the equation, the minimum thickness of Spray-Applied Fire Resistive Materials required for various fire resistance ratings of contour sprayed or boxed columns may be determined from the table below:

| Min Cal Size | W/D | Min Thk In. 1 Hr | 1-1/2 Hr | 2 Hr | 3 Hr | 4 Hr |
|---|---|---|---|---|---|---|
| W44x13 | 0.556 | 14/16 | 1 5/16 | 1 11/16 | 2 8/16 | 3 6/16 |
| W5x16 | 0.550 | 14/16 | 1 5/16 | 1 11/16 | 2 8/16 | 3 6/16 |
| W5x19 | 0.644 | 13/16 | 1 3/16 | 1 9/16 | 2 6/16 | 3 2/16 |
| W6x9 | 0.338 | 1 1/16 | 1 8/16 | 2 | 2 8/16 | 3 13/16 |
| W6x12 | 0.448 | 15/16 | 1 7/16 | 1 14/16 | 2 8/16 | 3 12/16 |
| W6x15 | 0.431 | 1 | 1 7/16 | 1 15/16 | 2 8/16 | 3 13/16 |
| W6x16 | 0.584 | 13/16 | 1 4/16 | 1 11/16 | 2 8/16 | 3 5/16 |
| W6x20 | 0.563 | 14/16 | 1 4/16 | 1 11/16 | 2 8/16 | 3 6/16 |
| W6x25 | 0.896 | 12/16 | 1 2/16 | 1 10/16 | 2 8/16 | N/A |
| W8x10 | 0.327 | 1 1/16 | 1 10/16 | 2 2/16 | 3 3/16 | N/A |
| W8x13 | 0.421 | 1 | 1 7/16 | 1 15/16 | 2 8/16 | 3 13/16 |
| W8x15 | 0.481 | 15/16 | 1 6/16 | 1 13/16 | 2 8/16 | 3 10/16 |
| W8x18 | 0.499 | 15/16 | 1 6/16 | 1 13/16 | 2 8/16 | 3 9/16 |
| W8x21 | 0.577 | 14/16 | 1 4/16 | 1 11/16 | 2 8/16 | 3 5/16 |
| W8x24 | 0.591 | 13/16 | 1 4/16 | 1 11/16 | 2 8/16 | 3 5/16 |
| W8x28 | 0.688 | 12/16 | 1 3/16 | 1 6/16 | 2 | 2 11/16 |
| W8x31 | 0.665 | 13/16 | 1 3/16 | 1 9/16 | 2 5/16 | 3 1/16 |
| W8x35 | 0.749 | 12/16 | 1 2/16 | 1 6/16 | 2 | 2 11/16 |
| W8x40 | 0.849 | 11/16 | 1 4/16 | 1 2/16 | 1 11/16 | 2 8/16 |
| W8x48 | 1.000 | 10/16 | 1 4/16 | 1 2/16 | 1 11/16 | 2 7/16 |
| W8x58 | 1.200 | 9/16 | 1 3/16 | 1 2/16 | 1 10/16 | 2 3/16 |
| W8x67 | 1.370 | 8/16 | 12/16 | 1 | 1 8/16 | 2 |
| W10x12 | 0.347 | 1 1/16 | 1 8/16 | 2 | 2 8/16 | 3 13/16 |
| W10x15 | 0.429 | 1 | 1 7/16 | 1 15/16 | 2 8/16 | 3 13/16 |
| W10x17 | 0.482 | 15/16 | 1 6/16 | 1 13/16 | 2 8/16 | 3 10/16 |
| W10x19 | 0.538 | 14/16 | 1 5/16 | 1 12/16 | 2 8/16 | 3 7/16 |
| W10x22 | 0.523 | 14/16 | 1 5/16 | 1 12/16 | 2 8/16 | 3 8/16 |
| W10x26 | 0.612 | 13/16 | 1 4/16 | 1 10/16 | 2 7/16 | 3 4/16 |
| W10x30 | 0.699 | 12/16 | 1 2/16 | 1 6/16 | 2 | 2 11/16 |
| W10x33 | 0.661 | 13/16 | 1 3/16 | 1 9/16 | 2 5/16 | 3 2/16 |
| W10x39 | 0.780 | 12/16 | 1 1/16 | 1 6/16 | 2 | 2 11/16 |
| W10x45 | 0.888 | 11/16 | 14/16 | 1 2/16 | 1 11/16 | 2 8/16 |
| W10x49 | 0.840 | 11/16 | 14/16 | 1 2/16 | 1 11/16 | 2 8/16 |
| W10x54 | 0.922 | 11/16 | 14/16 | 1 2/16 | 1 11/16 | 2 8/16 |
| W10x60 | 1.010 | 10/16 | 14/16 | 1 2/16 | 1 11/16 | 2 7/16 |
| W10x68 | 1.150 | 9/16 | 14/16 | 1 2/16 | 1 11/16 | 2 4/16 |
| W10x77 | 1.280 | 9/16 | 13/16 | 1 1/16 | 1 9/16 | 2 1/16 |
| W10x88 | 1.450 | 8/16 | 12/16 | 1 | 1 7/16 | 1 15/16 |
| W10x100 | 1.640 | 7/16 | 11/16 | 14/16 | 1 5/16 | 1 12/16 |
| W10x112 | 1.810 | 7/16 | 10/16 | 13/16 | 1 4/16 | 1 10/16 |
| W12x14 | 0.363 | 1 1/16 | 1 8/16 | 2 | 2 8/16 | 3 13/16 |
| W12x16 | 0.410 | 1 | 1 8/16 | 1 15/16 | 2 8/16 | 3 13/16 |
| W12x19 | 0.485 | 15/16 | 1 6/16 | 1 13/16 | 2 8/16 | 3 10/16 |
| W12x22 | 0.560 | 14/16 | 1 5/16 | 1 11/16 | 2 8/16 | 3 6/16 |
| W12x26 | 0.531 | 14/16 | 1 5/16 | 1 12/16 | 2 8/16 | 3 7/16 |
| W12x30 | 0.607 | 13/16 | 1 4/16 | 1 10/16 | 2 7/16 | 3 4/16 |
| W12x35 | 0.703 | 12/16 | 1 2/16 | 1 6/16 | 2 | 2 11/16 |
| W12x40 | 0.734 | 12/16 | 1 2/16 | 1 6/16 | 2 | 2 11/16 |
| W12x45 | 0.829 | 11/16 | 1 1/16 | 1 6/16 | 2 | 2 11/16 |
| W12x50 | 0.909 | 11/16 | 14/16 | 1 2/16 | 1 11/16 | 2 8/16 |
| W12x53 | 0.855 | 11/16 | 14/16 | 1 2/16 | 1 11/16 | 2 8/16 |
| W12x58 | 0.925 | 11/16 | 14/16 | 1 2/16 | 1 11/16 | 2 8/16 |
| W12x65 | 0.925 | 11/16 | 14/16 | 1 2/16 | 1 11/16 | 2 8/16 |
| W12x72 | 1.020 | 10/16 | 14/16 | 1 2/16 | 1 11/16 | 2 7/16 |
| W12x79 | 1.110 | 10/16 | 14/16 | 1 2/16 | 1 11/16 | 2 5/16 |
| W12x87 | 1.220 | 9/16 | 13/16 | 1 1/16 | 1 10/16 | 2 2/16 |
| W12x96 | 1.340 | 8/16 | 12/16 | 1 | 1 8/16 | 2 |
| W12x106 | 1.470 | 8/16 | 12/16 | 15/16 | 1 7/16 | 1 14/16 |
| W12x120 | 1.650 | 7/16 | 11/16 | 14/16 | 1 5/16 | 1 12/16 |
| W12x136 | 1.860 | 7/16 | 10/16 | 13/16 | 1 3/16 | 1 9/16 |
| W12x152 | 2.040 | 6/16 | 9/16 | 12/16 | 1 2/16 | 1 8/16 |
| W12x170 | 2.260 | 6/16 | 9/16 | 11/16 | 1 1/16 | 1 6/16 |
| W12x190 | 2.500 | 5/16 | 8/16 | 10/16 | 15/16 | 1 4/16 |
| W12x210 | 2.730 | 5/16 | 7/16 | 9/16 | 14/16 | 1 3/16 |
| W12x230 | 2.960 | 5/16 | 7/16 | 9/16 | 13/16 | 1 2/16 |
| W12x252 | 3.200 | 5/16 | 7/16 | 9/16 | 13/16 | 1 1/16 |
| W12x279 | 3.500 | 4/16 | 6/16 | 8/16 | 12/16 | 15/16 |
| W12x305 | 3.760 | 4/16 | 6/16 | 8/16 | 11/16 | 15/16 |
| W12x336 | 4.060 | 4/16 | 5/16 | 7/16 | 10/16 | 14/16 |
| W14x22 | 0.476 | 15/16 | 1 6/16 | 1 13/16 | 2 8/16 | 3 10/16 |
| W14x26 | 0.559 | 14/16 | 1 5/16 | 1 11/16 | 2 8/16 | 3 6/16 |
| W14x30 | 0.562 | 14/16 | 1 4/16 | 1 11/16 | 2 8/16 | 3 6/16 |
| W14x34 | 0.633 | 13/16 | 1 3/16 | 1 10/16 | 2 6/16 | 3 3/16 |
| W14x38 | 0.706 | 12/16 | 1 2/16 | 1 6/16 | 2 | 2 11/16 |
| W14x43 | 0.752 | 12/16 | 1 2/16 | 1 6/16 | 2 | 2 11/16 |
| W14x48 | 0.835 | 11/16 | 1 1/16 | 1 6/16 | 2 | 2 11/16 |
| W14x53 | 0.915 | 11/16 | 14/16 | 1 2/16 | 1 11/16 | 2 8/16 |
| W14x61 | 0.928 | 11/16 | 14/16 | 1 2/16 | 1 11/16 | 2 8/16 |
| W14x68 | 1.040 | 10/16 | 14/16 | 1 2/16 | 1 11/16 | 2 6/16 |
| W14x74 | 1.120 | 9/16 | 14/16 | 1 2/16 | 1 11/16 | 2 4/16 |
| W14x82 | 1.230 | 9/16 | 13/16 | 1 1/16 | 1 10/16 | 2 2/16 |
| W14x90 | 1.080 | 10/16 | 14/16 | 1 2/16 | 1 11/16 | 2 5/16 |
| W14x99 | 1.180 | 9/16 | 13/16 | 1 2/16 | 1 10/16 | 2 3/16 |
| W14x109 | 1.290 | 9/16 | 13/16 | 1 1/16 | 1 9/16 | 2 1/16 |
| W14x120 | 1.420 | 8/16 | 12/16 | 1 | 1 7/16 | 1 15/16 |
| W14x132 | 1.560 | 8/16 | 11/16 | 15/16 | 1 6/16 | 1 13/16 |
| W14x145 | 1.640 | 7/16 | 11/16 | 14/16 | 1 5/16 | 1 12/16 |
| W14x159 | 1.780 | 7/16 | 10/16 | 13/16 | 1 4/16 | 1 10/16 |
| W14x176 | 1.960 | 6/16 | 9/16 | 12/16 | 1 2/16 | 1 8/16 |
| W14x193 | 2.140 | 6/16 | 9/16 | 12/16 | 1 1/16 | 1 7/16 |
| W14x211 | 2.320 | 6/16 | 8/16 | 11/16 | 1 | 1 6/16 |
| W14x233 | 2.550 | 5/16 | 8/16 | 9/16 | 14/16 | 1 4/16 |
| W14x257 | 2.780 | 5/16 | 7/16 | 9/16 | 14/16 | 1 3/16 |
| W14x283 | 3.030 | 5/16 | 7/16 | 9/16 | 13/16 | 1 1/16 |
| W14x311 | 3.300 | 4/16 | 6/16 | 8/16 | 12/16 | 1 |
| W14x342 | 3.580 | 4/16 | 6/16 | 8/16 | 11/16 | 15/16 |
| W14x370 | 3.840 | 4/16 | 6/16 | 7/16 | 11/16 | 14/16 |
| W14x398 | 4.090 | 4/16 | 5/16 | 7/16 | 10/16 | 14/16 |
| W14x426 | 4.320 | 4/16 | 5/16 | 7/16 | 10/16 | 13/16 |
| W14x455 | 4.590 | 4/16 | 5/16 | 6/16 | 9/16 | 12/16 |
| W14x500 | 4.950 | 4/16 | 5/16 | 6/16 | 9/16 | 12/16 |
| W14x550 | 5.350 | 4/16 | 4/16 | 6/16 | 8/16 | 11/16 |
| W14x605 | 5.820 | 4/16 | 4/16 | 5/16 | 8/16 | 10/16 |
| W14x665 | 6.210 | 4/16 | 4/16 | 5/16 | 7/16 | 9/16 |
| W14x730 | 6.760 | 4/16 | 4/16 | 5/16 | 6/16 | 9/16 |
| W16x26 | 0.499 | 15/16 | 1 6/16 | 1 13/16 | 2 8/16 | 3 9/16 |
| W16x31 | 0.592 | 13/16 | 1 4/16 | 1 10/16 | 2 7/16 | 3 4/16 |
| W16x36 | 0.617 | 13/16 | 1 4/16 | 1 10/16 | 2 7/16 | 3 3/16 |
| W16x40 | 0.686 | 13/16 | 1 3/16 | 1 9/16 | 2 5/16 | 3 1/16 |
| W16x45 | 0.767 | 12/16 | 1 1/16 | 1 6/16 | 2 | 2 11/16 |
| W16x50 | 0.846 | 11/16 | 14/16 | 1 2/16 | 1 11/16 | 2 8/16 |
| W16x57 | 0.963 | 10/16 | 14/16 | 1 2/16 | 1 11/16 | 2 8/16 |
| W16x67 | 0.936 | 11/16 | 14/16 | 1 2/16 | 1 11/16 | 2 8/16 |
| W16x77 | 1.070 | 10/16 | 14/16 | 1 2/16 | 1 11/16 | 2 5/16 |
| W16x89 | 1.220 | 9/16 | 13/16 | 1 1/16 | 1 10/16 | 2 2/16 |
| W16x100 | 1.370 | 8/16 | 12/16 | 1 | 1 8/16 | 2 |
| W18x35 | 0.602 | 13/16 | 1 4/16 | 1 10/16 | 2 7/16 | 3 4/16 |
| W18x40 | 0.688 | 12/16 | 1 3/16 | 1 6/16 | 2 | 2 11/16 |
| W18x46 | 0.786 | 12/16 | 1 1/16 | 1 6/16 | 2 | 2 11/16 |
| W18x50 | 0.778 | 12/16 | 1 1/16 | 1 6/16 | 2 | 2 11/16 |
| W18x55 | 0.850 | 11/16 | 14/16 | 1 2/16 | 1 11/16 | 2 8/16 |
| W18x60 | 0.923 | 11/16 | 14/16 | 1 2/16 | 1 11/16 | 2 8/16 |
| W18x65 | 0.997 | 10/16 | 14/16 | 1 2/16 | 1 11/16 | 2 7/16 |
| W18x71 | 1.080 | 10/16 | 14/16 | 1 2/16 | 1 11/16 | 2 5/16 |
| W18x76 | 0.971 | 10/16 | 14/16 | 1 2/16 | 1 11/16 | 2 8/16 |
| W18x86 | 1.090 | 10/16 | 14/16 | 1 2/16 | 1 11/16 | 2 5/16 |
| W18x97 | 1.220 | 9/16 | 13/16 | 1 1/16 | 1 10/16 | 2 2/16 |
| W18x106 | 1.330 | 8/16 | 12/16 | 1 | 1 8/16 | 2 |
| W18x119 | 1.480 | 8/16 | 12/16 | 15/16 | 1 7/16 | 1 14/16 |
| W21x44 | 0.672 | 13/16 | 1 3/16 | 1 9/16 | 2 5/16 | 3 1/16 |
| W21x50 | 0.754 | 12/16 | 1 2/16 | 1 6/16 | 2 | 2 11/16 |
| W21x57 | 0.857 | 11/16 | 14/16 | 1 2/16 | 1 11/16 | 2 8/16 |
| W21x62 | 0.849 | 11/16 | 14/16 | 1 2/16 | 1 11/16 | 2 8/16 |
| W21x68 | 0.926 | 11/16 | 14/16 | 1 2/16 | 1 11/16 | 2 8/16 |
| W21x73 | 0.989 | 10/16 | 14/16 | 1 2/16 | 1 11/16 | 2 7/16 |
| W21x83 | 1.120 | 9/16 | 14/16 | 1 2/16 | 1 11/16 | 2 4/16 |
| W21x93 | 1.240 | 9/16 | 13/16 | 1 1/16 | 1 10/16 | 2 2/16 |
| W21x101 | 1.130 | 9/16 | 14/16 | 1 2/16 | 1 11/16 | 2 4/16 |
| W21x111 | 1.240 | 9/16 | 13/16 | 1 1/16 | 1 10/16 | 2 2/16 |
| W21x122 | 1.350 | 8/16 | 12/16 | 1 | 1 8/16 | 2 |
| W21x132 | 1.450 | 8/16 | 12/16 | 1 | 1 7/16 | 1 15/16 |
| W21x147 | 1.610 | 7/16 | 11/16 | 14/16 | 1 5/16 | 1 12/16 |
| W24x55 | 0.749 | 12/16 | 1 2/16 | 1 6/16 | 2 | 2 11/16 |
| W24x62 | 0.844 | 11/16 | 14/16 | 1 2/16 | 1 11/16 | 2 8/16 |
| W24x68 | 0.837 | 11/16 | 1 1/16 | 1 6/16 | 2 | 2 11/16 |
| W24x76 | 0.933 | 11/16 | 14/16 | 1 2/16 | 1 11/16 | 2 8/16 |
| W24x84 | 1.020 | 10/16 | 14/16 | 1 2/16 | 1 11/16 | 2 7/16 |
| W24x94 | 1.140 | 9/16 | 14/16 | 1 2/16 | 1 11/16 | 2 4/16 |
| W24x104 | 1.070 | 10/16 | 14/16 | 1 2/16 | 1 11/16 | 2 5/16 |
| W24x117 | 1.200 | 9/16 | 13/16 | 1 2/16 | 1 10/16 | 2 3/16 |
| W24x131 | 1.330 | 8/16 | 12/16 | 1 | 1 8/16 | 2 |
| W24x146 | 1.480 | 8/16 | 12/16 | 15/16 | 1 7/16 | 1 14/16 |
| W24x162 | 1.630 | 7/16 | 11/16 | 14/16 | 1 5/16 | 1 12/16 |
| W27x84 | 0.921 | 11/16 | 14/16 | 1 2/16 | 1 11/16 | 2 8/16 |
| W27x94 | 1.030 | 10/16 | 14/16 | 1 2/16 | 1 11/16 | 2 6/16 |
| W27x102 | 1.110 | 10/16 | 14/16 | 1 2/16 | 1 11/16 | 2 5/16 |
| W27x114 | 1.230 | 9/16 

| | | | | | | |
|---|---|---|---|---|---|---|
| W30x124 | 1.240 | 9/16 | 13/16 | 1 1/16 | 1 10/16 | 2 2/16 |
| W30x132 | 1.320 | 9/16 | 13/16 | 1 1/16 | 1 9/16 | 2 1/16 |
| W30x173 | 1.470 | 8/16 | 12/16 | 15/16 | 1 7/16 | 1 14/16 |
| W30x191 | 1.620 | 7/16 | 11/16 | 14/16 | 1 5/16 | 1 12/16 |
| W30x211 | 1.760 | 7/16 | 10/16 | 14/16 | 1 4/16 | 1 11/16 |
| W33x118 | 1.080 | 10/16 | 14/16 | 1 2/16 | 1 11/16 | 2 5/16 |
| W33x130 | 1.180 | 9/16 | 13/16 | 1 2/16 | 1 10/16 | 2 3/16 |
| W33x141 | 1.280 | 9/16 | 13/16 | 1 1/16 | 1 9/16 | 2 1/16 |
| W33x152 | 1.370 | 8/16 | 12/16 | 1 | 1 8/16 | 2 |
| W33x201 | 1.580 | 8/16 | 11/16 | 15/16 | 1 6/16 | 1 13/16 |
| W33x221 | 1.730 | 7/16 | 10/16 | 14/16 | 1 4/16 | 1 11/16 |
| W33x241 | 1.870 | 7/16 | 10/16 | 13/16 | 1 3/16 | 1 9/16 |
| W36x135 | 1.150 | 9/16 | 14/16 | 1 2/16 | 1 11/16 | 2 4/16 |
| W36x150 | 1.270 | 9/16 | 13/16 | 1 1/16 | 1 9/16 | 2 1/16 |
| W36x160 | 1.350 | 8/16 | 12/16 | 1 | 1 8/16 | 2 |
| W36x170 | 1.430 | 8/16 | 12/16 | 1 | 1 7/16 | 1 15/16 |
| W36x182 | 1.520 | 8/16 | 11/16 | 15/16 | 1 6/16 | 1 14/16 |
| W36x194 | 1.620 | 7/16 | 11/16 | 14/16 | 1 5/16 | 1 12/16 |
| W36x210 | 1.740 | 7/16 | 10/16 | 14/16 | 1 4/16 | 1 11/16 |
| W36x230 | 1.690 | 7/16 | 11/16 | 14/16 | 1 5/16 | 1 11/16 |
| W36x245 | 1.790 | 7/16 | 10/16 | 13/16 | 1 4/16 | 1 10/16 |
| W36x260 | 1.900 | 7/16 | 10/16 | 13/16 | 1 3/16 | 1 9/16 |
| W36x280 | 2.030 | 6/16 | 9/16 | 12/16 | 1 2/16 | 1 8/16 |
| W36x300 | 2.170 | 6/16 | 9/16 | 12/16 | 1 1/16 | 1 7/16 |

The thicknesses contained in the table below are applicable when the Spray-Applied Fire Resistive Materials applied to columns' flange tips are reduced to one-half that shown in the table below:

| Min Col Size | W/D | Min Thk In. 1 Hr | 1-1/2 Hr | 2 Hr | 3 Hr | 4 Hr |
|---|---|---|---|---|---|---|
| W6x9 | 0.338 | 1-1/8 | 1-5/8 | 2-1/16 | 3-1/8 | 4-3/16 |
| W6x16 | 0.584 | 7/8 | 1-5/16 | 1-3/4 | 2-9/16 | 3-3/8 |
| W8x28 | 0.688 | 13/16 | 1-3/16 | 1-1/2 | 2-1/4 | 2-15/16 |
| W10x49 | 0.840 | 3/4 | 1-1/16 | 1-3/8 | 2-1/16 | 2-3/4 |

| | | | | | | |
|---|---|---|---|---|---|---|
| W14x233 | 2.55 | 5/16 | 1/2 | 11/16 | 1-3/16 | 1-5/8 |
| W14x730 | 6.76 | 5/16 | 5/16 | 5/16 | 9/16 | 3/4 |

**As an alternate to the equation,** the min thickness of Spray-Applied Fire Resistive Materials Types Z-146, Z-146PC, Z-146T, Z-156, Z-156T and Z-156PC required for various fire resistance ratings of contours sprayed or boxed wide flange columns are shown in the table below:

| Column Size In. | Min Thkns In. 1 Hr | 1-1/2 Hr | 2 Hr | 3 Hr | 4 Hr |
|---|---|---|---|---|---|
| W6x9 | 1-1/16 | 1-7/16 | 1-1/2 | 2-1/4 | 3 |
| W6x12 | 1 | 1-3/8 | 1-1/2 | 2-1/4 | 3 |
| W6x16 | 13/16 | 1-1/4 | 1-1/2 | 2-1/4 | 2-15/16 |
| W8x28 | 3/4 | 1-3/16 | 1-3/8 | 2 | 2-1/2 |
| W10x49 | 11/16 | 7/8 | 1-1/8 | 1-9/16 | 1-15/16 |
| W21x73 | 11/16 | 7/8 | 1-1/8 | 1-9/16 | 1-15/16 |
| W12x106 | 9/16 | 7/8 | 1-1/8 | 1-9/16 | 1-15/16 |
| W14x233 | 5/16 | 1/2 | 9/16 | 7/8 | 1-1/4 |
| W14x730 | 5/16 | 5/16 | 5/16 | 3/8 | 9/16 |

**ARABIAN VERMICULITE INDUSTRIES** — Types MK-6/HY, MK-6/HY Extended Set, MK-10 HB, MK-10 HB Extended Set, MK-6/HB, MK-6s, Z-106, Z-106/G, Z-106/HY.

**GCP KOREA INC** — Types MK-6/HY, MK-6/HY Extended Set, MK-10 HB, MK-10 HB Extended Set, MK-6/HB, MK-6s, Z-106, Z-106/G, Z-106/HY.

**PYROK INC** — Type LD.

**SOUTHWEST FIREPROOFING PRODUCTS CO** — Types 4, 5, 5EF, 5GP, 5MD, 7GP, 7HD, 8EF, 8GP, 8MD, 9EF, 9GP, 9MD.

**GCP APPLIED TECHNOLOGIES INC** — Types MK-6/HY, MK-6/HY Extended Set, MK-10 HB, MK-10 HB Extended Set, MK-6/HB, MK-6s, RG, Z-106, Z-106/G, Z-106/HY, Z-146, Z-146PC, Z-146T, Z-156, Z-156T and Z-156PC (Types Z-146, Z-146PC, Z-146T, Z-156, Z-156PC, Z-156T also investigated for exterior use).

2. **Metal Lath** — (Required for box application - Optional for contour application) — 3.4 lb/sq yd galvanized or painted expanded steel lath. For box applications, lath shall be lapped 1 in. and tied together with No. 18 SWG galvanized steel; wire spaced vertically 6 in. O.C. For contour applications, lath is installed vertically with joints butted together and secured to the column with powder actuated fasteners located 18 inches on center at joints and as necessary to have the lath follow the column contour. As an alternate, either welded fixing or high temperature adhesive referenced "HTA Adhesive" (supplied by HTA Ltd), fixing of pins to steel column are permitted.

3. **Steel Column** — Wide flange steel column, min/max sizes as specified above.

*** Indicates such products shall bear the UL or cUL Certification Mark for jurisdictions employing the UL or cUL Certification (such as Canada),**

UL Product **iQ**® — UL Solutions

# BXUV.X528 - Fire-resistance Ratings - ANSI/UL 263

Design/System/Construction/Assembly Usage Disclaimer

- Authorities Having Jurisdiction should be consulted in all cases as to the particular requirements covering the installation and use of UL Certified products, equipment, system, devices, and materials.
- Authorities Having Jurisdiction should be consulted before construction.
- Fire resistance assemblies and products are developed by the design submitter and have been investigated by UL for compliance with applicable requirements. The published information cannot always address every construction nuance encountered in the field.
- When field issues arise, it is recommended the first contact for assistance be the technical service staff provided by the product manufacturer noted for the design. Users of fire resistance assemblies are advised to consult the general Guide Information for each product category and each group of assemblies. The Guide Information includes specifics concerning alternate materials and alternate methods of construction.
- Only products which bear UL's Mark are considered Certified.

## Fire-resistance Ratings - ANSI/UL 263

BXUV - Fire Resistance Ratings - ANSI/UL 263 Certified for United States
BXUV7 - Fire Resistance Ratings - CAN/ULC-S101 Certified for Canada
See General Information for Fire-resistance Ratings - ANSI/UL 263 Certified for United States
Design Criteria and Allowable Variances

See General Information for Fire Resistance Ratings - CAN/ULC-S101 Certified for Canada
Design Criteria and Allowable Variances

Design No. **X528**

November 9, 2022

**Ratings — 1, 2 and 3 Hr.**
*** Indicates such products shall bear the UL or cUL Certification Mark for jurisdictions employing the UL or cUL Certification (such as Canada), respectively.**

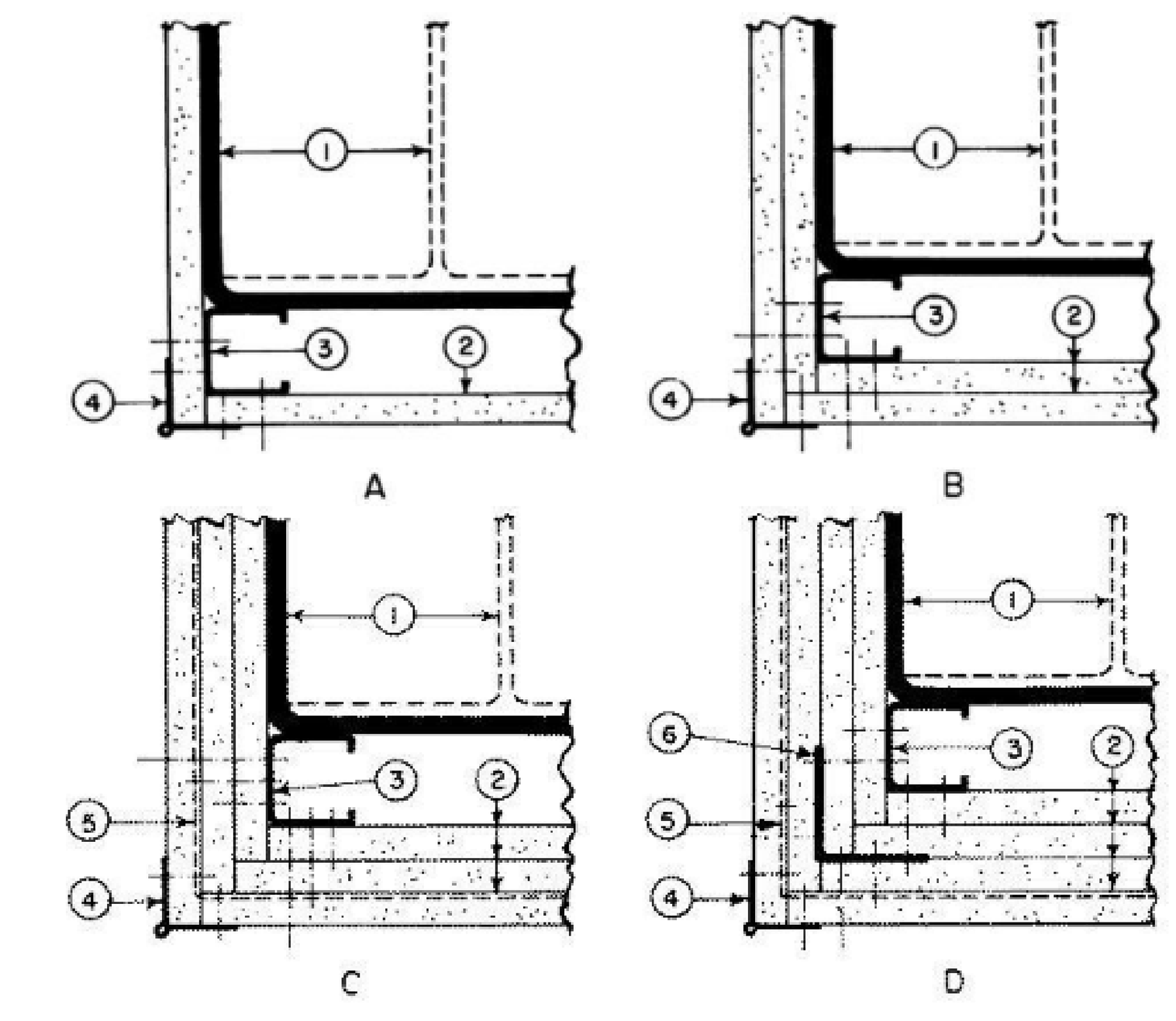


CORNER DETAILS OF WALLBOARD
SUPPORT SYSTEMS WITHOUT STEEL COVERS

1. **Steel Column** — Min sizes of W-shaped and tubular steel columns which appear in the AISC Steel Construction Manual as shown under Item 2.

2. **Gypsum Board* — Any 1/2 in. thick UL Classified Gypsum Board that is eligible for use in Design No. X515. Any 5/8 in. thick UL Classified Gypsum Board that is eligible for use in Design Nos. L501, G512 or U305.** Nom 1/2 in. or 5/8 in. thick gypsum board. Applied in layers as noted in the above illustrations. Boards are to be applied vertically without horizontal joints. Min total thickness of layers in inches for the various ratings and min column sizes are as follows:

| W Shaped Column Min Column Size | Rating (Hr) 1 | 2 | 3 | Corner Details For Various Rating 1 Hr | 2 Hr | 3 Hr |
|---|---|---|---|---|---|---|
| Total thickness (In.) | | | | | | |
| W4x13 | 1 | 1-1/2 | 2-1/4 | B | C | D |
| W6x15.5 | 1 | 1-1/2 | 2-1/4 | B | C | D |
| W10x49 | 1/2 | 1-1/8 | 1-7/8 | A | B | C |

| Tube Shaped columns | | | | | | |
|---|---|---|---|---|---|---|
| TS 4 by 4 | | | | | | |
| by0.188 | 1 | 1-3/4 | 2-5/8 | B | C | D |
| TS 8 by 8 | | | | | | |
| by 0.250 | 5/8 | 1-1/2 | 2-1/4 | A | C | D |

**AMERICAN GYPSUM CO** (View Classification) — CKNX.R14196
**BEIJING NEW BUILDING MATERIALS PUBLIC LTD CO** (View Classification) — CKNX.R19374
**CABOT MANUFACTURING ULC** (View Classification) — CKNX.R25370
**CERTAINTEED GYPSUM INC** (View Classification) — CKNX.R3660
**CGC INC** (View Classification) — CKNX.R19751
**GEORGIA-PACIFIC GYPSUM L L C** (View Classification) — CKNX.R2717
**LOADMASTER SYSTEMS INC** (View Classification) — CKNX.R11809
**NATIONAL GYPSUM CO** (View Classification) — eXP-C, CKNX.R3501
**PABCO BUILDING PRODUCTS L L C, DBA PABCO GYPSUM** (View Classification) — CKNX.R7094
**PANEL REY S A** (View Classification) — CKNX.R21796
**SIAM GYPSUM INDUSTRY (SARABURI) CO LTD** (View Classification) — CKNX.R19262
**THAI GYPSUM PRODUCTS PCL** (View Classification) — CKNX.R27517
**THE SIAM GYPSUM INDUSTRY (SONGKHLA) CO** (View Classification) — CKNX.R40305
**UNITED STATES GYPSUM CO** (View Classification) — CKNX.R1319
**USG BORAL DRYWALL SFZ LLC** (View Classification) — CKNX.R38438
**USG MEXICO S A DE C V** (View Classification) — CKNX.R16089

2A. **Gypsum Board*** — As an alternate to Item 2- 3/4 in. thick gypsum wallboard. For 2 Hr rating, 1-1/2 in. total thickness, installed in accordance with corner detail B. For 3 Hr rating, 2-1/4 in. total thickness installed in accordance with corner detail C. Boards are to be applied vertically without horizontal joints.
**CGC INC** — Type IP-X3 or ULTRACODE

**UNITED STATES GYPSUM CO** — Type IP-X3 or ULTRACODE

**USG BORAL DRYWALL SFZ LLC** — Type ULTRACODE

**USG MEXICO S A DE C V** — Type IP-X3 or ULTRACODE

2B. **Gypsum Board*** — (As an alternate to Items 2 and 2A) — Nominal 5/8 in. thick panels. One of the layers of **Gypsum Board** (Item 2) used to obtain the minimum required thickness in Item 2 may be substituted with one layer and secured as described in Item 2.
**PABCO BUILDING PRODUCTS L L C, DBA PABCO GYPSUM** — Type QuietRock ES

2C. **Wall and Partition Facings and Accessories*** — (As an alternate to Item 2 through 2B) — Composite Gypsum Panel — Nominal 5/8 in. thick panels. One of the layers of **Gypsum Board** (Item 2) used to obtain the minimum required thickness in Item 2 may be substituted with one layer of composite gypsum panel and secured as described in Item 2.
**PABCO BUILDING PRODUCTS L L C, DBA PABCO GYPSUM** — Type QuietRock QR

2D. **Gypsum Board*** — (As an alternate to Item 2, For use with Item 4A) — 1/2 in. thick, installed as described in Item 2.

**CERTAINTEED GYPSUM INC** — Type C

3. **Steel Stud** — 1-5/8 in. wide with 1-5/16 and 1-7/16 in. legs having a 1/4- in. folded flange, fabricated from min. 0.0179 in. thick bare metal thickness steel. Length to be 1/2 in. less than the assembly height.

3A. **As an alternate to Item 3, Framing Members*** — galv. steel clips spaced 4 ft OC and 1-1/4 in. from top and bottom of column. A No. 28 MSG galv steel support angle with 1-1/4 in. length shall be placed over clips and secured with screws attaching the wallboard. The angle cut 1 in. less than assembly height splices in angle to occur over clips. The clips for use with wide flange columns only.
**JOHN WAGNER ASSOCIATES INC, DBA GRABBER** — Types CB, CB1Clips.

4. **Corner Beads** — No. 28 MSG galv steel, 1-1/4 in. legs to be attached to the wallboard with No. 6 by 1 in. screws spaced 12 in. OC max.

4A. **Corner Bead*** — (As an alternate to Item 4, For use with Item 2D) — 0.058 in. thick at shoulder thickness, 1-7/8 in. legs, attached to gypsum board using all-purpose ready mix joint compound.

**CERTAINTEED GYPSUM INC** — Types NC, NCPRO, NC450

5. **Tie Wire** — No. 18 SWG steel wire spaced 24 in. OC used with second layer of wallboard.

6. **Screws** — For attaching first layer of wallboard to steel studs, and third layer of wallboard to 2 in. by 2 in. steel angle (25 Ga) to be No. 6 by 1 in. (or 1-1/4 in. for 3/4 in. thick wallboard) Phillips head self-drilling, self-tapping double lead screws spaced 24 in. OC For attaching second layer of wallboard to steel studs and fourth layer of wallboard to 2 in. by 2 in. steel angle (25 Ga) to be No. 6 by 1-3/4 in. (or 2-1/4 in. for 3/4 in. thick wallboard) steel screws of the same type spaced 12 in. OC For attaching third layer of wallboard to steel studs to be No. 8 by 2-1/4 in. screws of the same type spaced 12 in. OC

7. **Finishing System** — (Not Shown) — Joint compound applied over corner beads to a thickness of 1/16 in.

*** Indicates such products shall bear the UL or cUL Certification Mark for jurisdictions employing the UL or cUL Certification (such as Canada), respectively.**

Last Updated on 2022-11-09


The appearance of a company's name or product in this database does not in itself assure that products so identified have been manufactured under UL Solutions' Follow - Up Service. Only those products bearing the UL Mark should be considered to be Certified and covered under UL Solutions' Follow - Up Service. Always look for the Mark on the product.

UL Solutions permits the reproduction of the material contained in Product iQ subject to the following conditions: 1. The Guide Information, Assemblies, Constructions, Designs, Systems, and/or Certifications (files) must be presented in their entirety and in a non-misleading manner, without any manipulation of the data (or drawings). 2. The statement "Reprinted from Product iQ with permission from UL Solutions" must appear adjacent to the extracted material. In addition, the reprinted material must include a copyright notice in the following format: "©2022 UL LLC."



ALL REPORTS, PLANS, SPECIFICATIONS AND COMPUTER FILES RELATING TO THIS PROJECT ARE THE PROPERTY OF THE MARTIN ARCHITECTURAL GROUP. THE MARTIN ARCHITECTURAL GROUP RETAINS ALL COMMON LAW, STATUTE AND OTHER RESERVED RIGHTS INCLUDING THE COPY-RIGHT THERETO. REPRODUCTION OF THE MATERIAL HEREIN OR SUBSTANTIAL USE WITHOUT WRITTEN PERMISSION OF THE MARTIN ARCHITECTURAL GROUP VIOLATES THE COPYRIGHT LAWS OF THE UNITED STATES AND WILL BE SUBJECT TO LEGAL PROSECUTION.
©2022, The Martin Architectural Group, P.C.


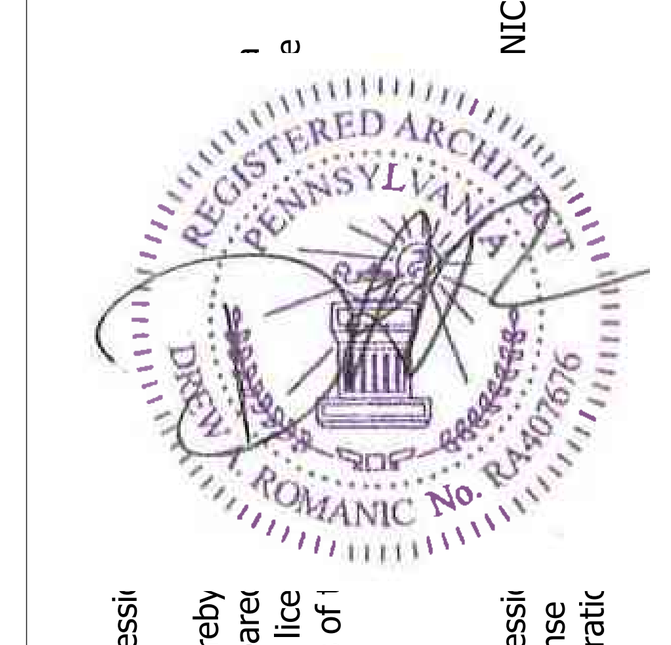


NIC
Professi
I hereby prepare duly lice laws of
Professi License Expiratio


THE MARTIN ARCHITECTURAL GROUP, P.C.
ARCHITECTS AND LAND PLANNERS
A PROFESSIONAL CORPORATION
240 NORTH 22ND STREET, PHILADELPHIA, PA, 19103
P (215) 665-1080 F (215) 561-5064


| | |
|---|---|
| P.A.: | DREW ROMANIC |
| P.M.: | JASON DECAMPLI |
| DRAWN BY: | Author |
| PROJECT NO: | 1362-12 |

| NO. | REVISION | DATE |
|---|---|---|
| 1 | PERMIT SET | 12/20/22 |

FIRE RATED ASSEMBLIES
**Granite Run Apartment 02**
MIDDLETOWN TOWNSHIP, PA

| | |
|---|---|
| SCALE: | |
| DATE: | 12/20/22 |

**A5.18**

©2022, The Martin Architectural Group, P.C.

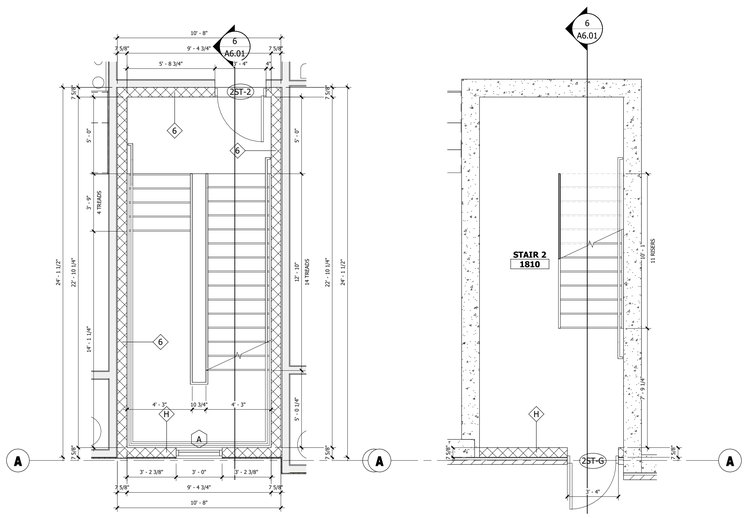


## 5 STAIR 2 PLAN - UPPER FLOORS
SCALE : 1/4" = 1'-0"

## 4 STAIR 2 PLAN - GROUND LEVEL
SCALE : 1/4" = 1'-0"

| STAIR FINISH SCHEDULE | | | | | | | |
|---|---|---|---|---|---|---|---|
| NAME | LEVEL | WALL FINISH | CIELING FINISH | LANDING FINISH | TREAD FINISH | RISER FINISH | COMMENTS |
| STAIR 1 | GROUND | PAINTED CMU | | VCT | RUBBER | STEEL | |
| STAIR 1 | 2-4 | PAINTED CMU | PAINTED GWB | VCT | RUBBER | STEEL | |
| STAIR 2 | GROUND | PAINTED CMU | | VCT | RUBBER | STEEL | |
| STAIR 2 | 2-4 | PAINTED CMU | PAINTED GWB | VCT | RUBBER | STEEL | |
| STAIR 3 | ALL | | | | | | STAIR BY GARAGE PRECASTER |
| STAIR 4 | ALL | | | | | | STAIR BY GARAGE PRECASTER |
| STAIR 5 | GROUND | PAINTED CMU | | VCT | | STEEL | |
| STAIR 5 | 2-4 | PAINTED CMU | PAINTED GWB | VCT | RUBBER | STEEL | |
| STAIR 6 | GROUND | PAINTED CMU | | VCT | RUBBER | STEEL | |
| STAIR 6 | 2-4 | PAINTED CMU | PAINTED GWB | VCT | RUBBER | STEEL | |
| STAIR 7 | GROUND | PAINTED CMU | | VCT | RUBBER | STEEL | |
| STAIR 7 | 2-4 | PAINTED CMU | PAINTED GWB | VCT | RUBBER | STEEL | |
| STAIR 8 | ALL | PAINTED CMU | | VCT | RUBBER | STEEL | |
| STAIR 9 | ALL | GYPSUM WALL BOARD | PAINTED GWB | VCT | RUBBER | STEEL | |

**ALL STRINGERS, RISERS & HANDRAILS PAINTED.**

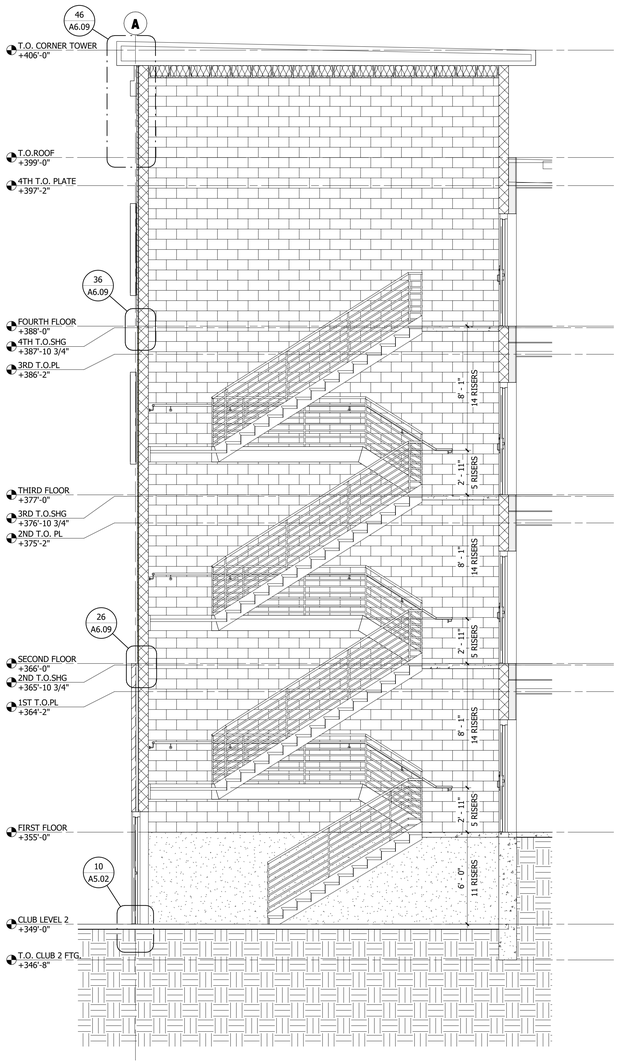


## 6 STAIR 2 SECTION
SCALE : 1/4" = 1'-0"

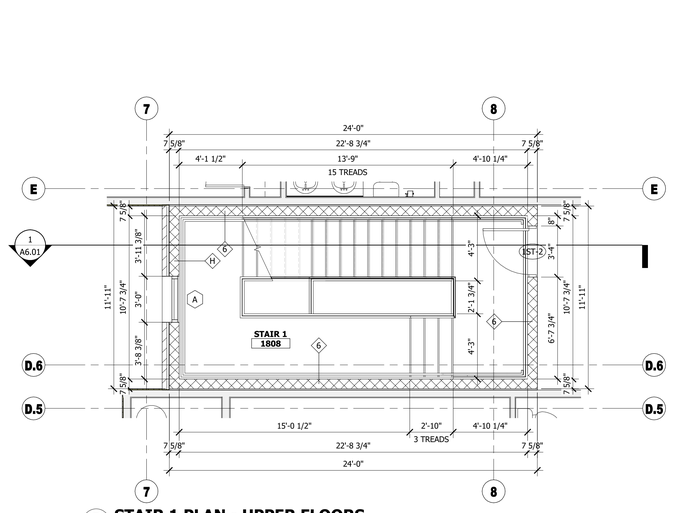


## 3 STAIR 1 PLAN - UPPER FLOORS
SCALE : 1/4" = 1'-0"

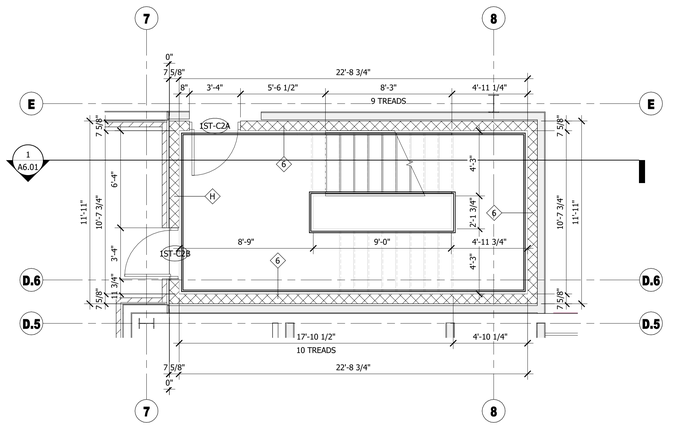


## 2 STAIR 1 PLAN - GROUND LEVEL
SCALE : 1/4" = 1'-0"

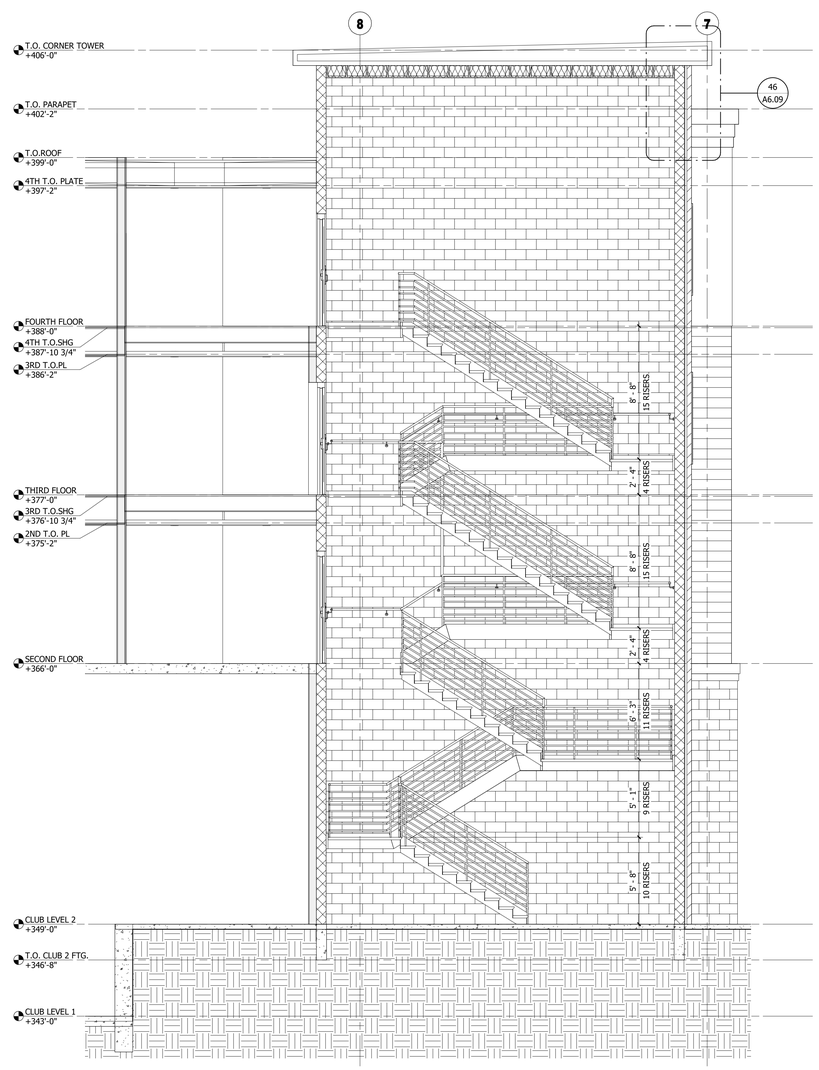


## 1 STAIR 1 SECTION
SCALE : 1/4" = 1'-0"

ALL REPORTS, PLANS, SPECIFICATIONS AND COMPUTER FILES RELATING TO THIS PROJECT ARE THE PROPERTY OF THE MARTIN ARCHITECTURAL GROUP. THE MARTIN ARCHITECTURAL GROUP RETAINS ALL COMMON LAW, STATUTE AND OTHER RESERVED RIGHTS INCLUDING THE COPY-RIGHT THERETO. REPRODUCTION OF THE MATERIAL HEREIN OR SUBSTANTIAL USE WITHOUT WRITTEN PERMISSION OF THE MARTIN ARCHITECTURAL GROUP VIOLATES THE COPYRIGHT LAWS OF THE UNITED STATES AND WILL BE SUBJECT TO LEGAL PROSECUTION.
©2022, The Martin Architectural Group, P.C.

NTS

COMMONWEALTH OF PENNSYLVANIA REGISTERED ARCHITECT DREW ROMANIC No. RA-020115

Professi
I hereby prepare this for laws of

Professi License Expirati

THE MARTIN ARCHITECTURAL GROUP, P.C.
ARCHITECTS AND LAND PLANNERS
A PROFESSIONAL CORPORATION
240 NORTH 22ND STREET, PHILADELPHIA, PA, 19103
P (215) 665-1600 F (215) 561-5064

| | |
|---|---|
| P.A.: | DREW ROMANIC |
| P.M.: | JASON DECAMPLI |
| DRAWN BY: | MAG |
| PROJECT NO: | 1362-12 |

| NO. | REVISION | DATE |
|---|---|---|
| 1 | PERMIT SET | 12/20/22 |

STAIR 1&2 PLANS

**Granite Run Apartment 02**

MIDDLETOWN TOWNSHIP, PA

| | |
|---|---|
| SCALE: | AS NOTED |
| DATE: | 12/31/2017 |

# A6.01

©2022, The Martin Architectural Group, P.C.

Printed: 1/13/2023 4:52:13 PM

**THIS STAIR AND AREA HAS BEEN SUBMITTED VIA THE GARAGE PERMIT SET RELEASED 12/7/22. THIS AREA IS INCLUDED HERE IS FOR COORDINATION AND UNDERSTANDING OF THE FUNCTION OF THE APARTMENT.**

## STAIR FINISH SCHEDULE

| NAME | LEVEL | WALL FINISH | CIELING FINISH | LANDING FINISH | TREAD FINISH | RISER FINISH | COMMENTS |
|---|---|---|---|---|---|---|---|
| STAIR 1 | GROUND | PAINTED CMU | | VCT | RUBBER | STEEL | |
| STAIR 1 | 2-4 | PAINTED CMU | PAINTED GWB | VCT | RUBBER | STEEL | |
| STAIR 2 | GROUND | PAINTED CMU | | VCT | RUBBER | STEEL | |
| STAIR 2 | 2-4 | PAINTED CMU | PAINTED GWB | VCT | RUBBER | STEEL | |
| STAIR 3 | ALL | | | | | | STAIR BY GARAGE PRECASTER |
| STAIR 4 | ALL | | | | | | STAIR BY GARAGE PRECASTER |
| STAIR 5 | GROUND | PAINTED CMU | | VCT | | STEEL | |
| STAIR 5 | 2-4 | PAINTED CMU | PAINTED GWB | VCT | RUBBER | STEEL | |
| STAIR 6 | GROUND | PAINTED CMU | | VCT | RUBBER | STEEL | |
| STAIR 6 | 2-4 | PAINTED CMU | PAINTED GWB | VCT | RUBBER | STEEL | |
| STAIR 7 | GROUND | PAINTED CMU | | VCT | RUBBER | STEEL | |
| STAIR 7 | 2-4 | PAINTED CMU | PAINTED GWB | VCT | RUBBER | STEEL | |
| STAIR 8 | ALL | PAINTED CMU | | VCT | RUBBER | STEEL | |
| STAIR 9 | ALL | GYPSUM WALL BOARD | PAINTED GWB | VCT | RUBBER | STEEL | |

**ALL STRINGERS, RISERS & HANDRAILS PAINTED.**

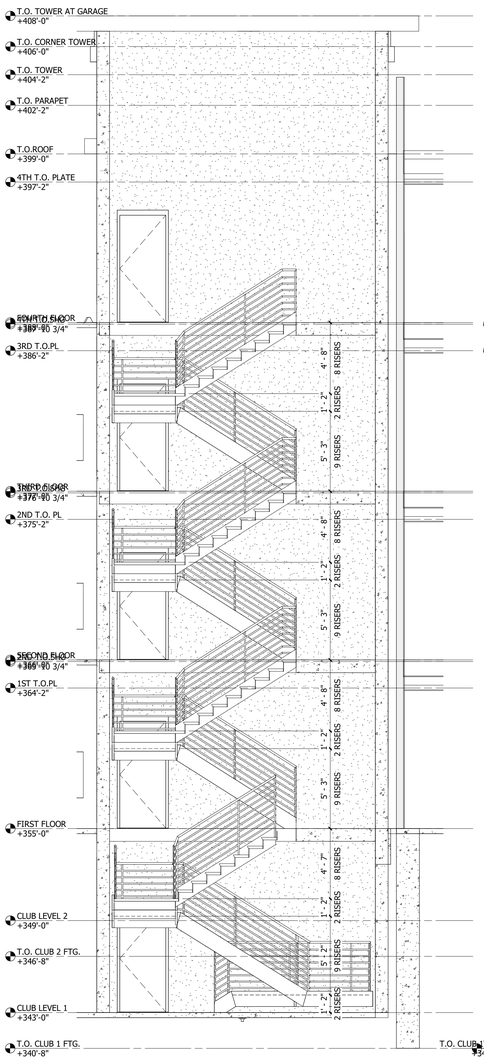


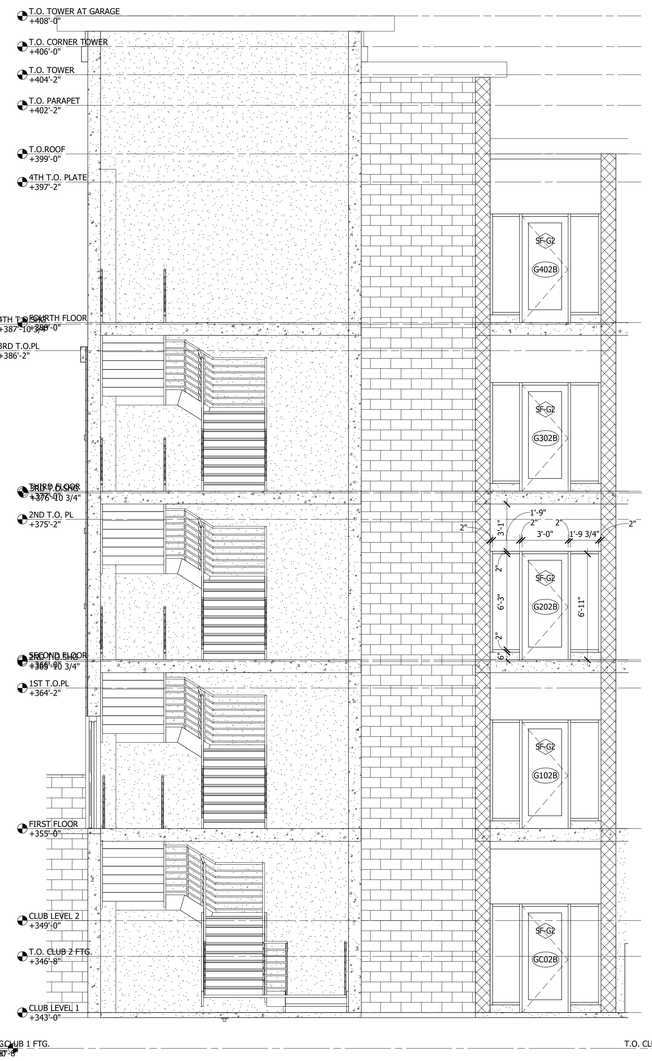


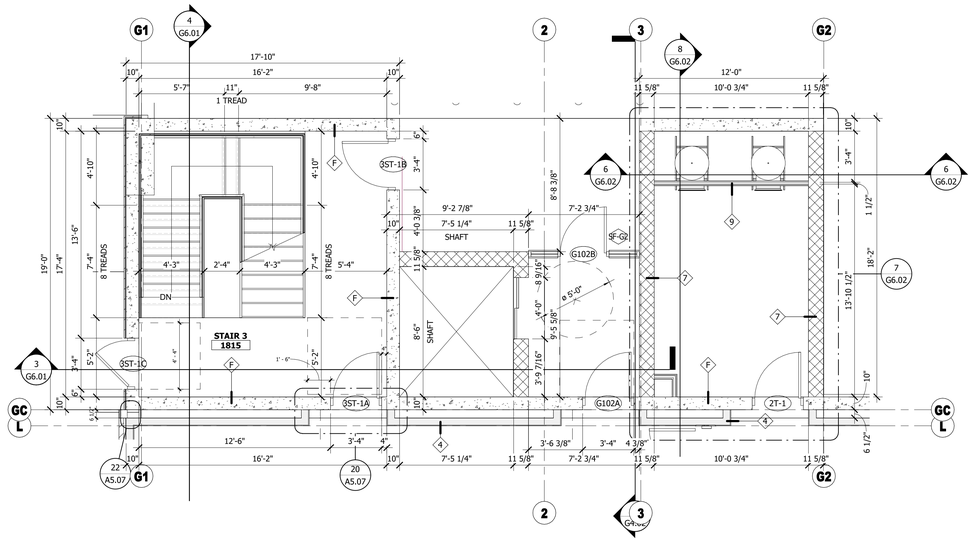


## 1 STAIR 3 /ELV 3 PLAN - UPPER LEVELS
**SCALE : 1/4" = 1'-0"**

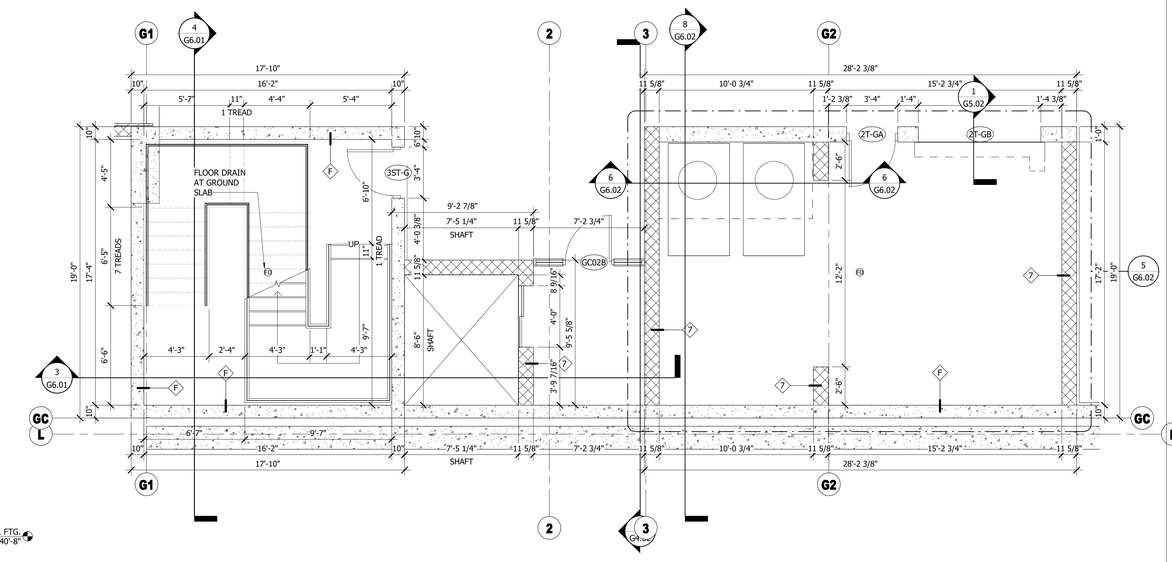


## 2 STAIR 3 /ELV 3 PLAN - GROUND LEVEL
**SCALE : 1/4" = 1'-0"**




## 4 STAIR 3 SECTION 2
**SCALE : 1/4" = 1'-0"**




## 3 STAIR 3 & ELEVATOR 3 SECTION 1
**SCALE : 1/4" = 1'-0"**


ALL REPORTS, PLANS, SPECIFICATIONS AND COMPUTER FILES RELATING TO THIS PROJECT ARE THE PROPERTY OF THE MARTIN ARCHITECTURAL GROUP. THE MARTIN ARCHITECTURAL GROUP RETAINS ALL COMMON LAW, STATUTE AND OTHER RESERVED RIGHTS INCLUDING THE COPY-RIGHT THERETO. REPRODUCTION OF THE MATERIAL HEREIN OR SUBSTANTIAL USE WITHOUT WRITTEN PERMISSION OF THE MARTIN ARCHITECTURAL GROUP VIOLATES THE COPYRIGHT LAWS OF THE UNITED STATES AND WILL BE SUBJECT TO LEGAL PROSECUTION.
©2022, The Martin Architectural Group, P.C.


NIC

COMMONWEALTH OF PENNSYLVANIA REGISTERED ARCHITECT DREW ROMANIC No. RA409015

Professi
I hereby prepare this/ac laws of

Professi License Expirati


THE MARTIN ARCHITECTURAL GROUP, P.C.
ARCHITECTS AND LAND PLANNERS
A PROFESSIONAL CORPORATION
240 NORTH 22ND STREET, PHILADELPHIA, PA, 19103
P (215) 665-1600 F (215) 561-5064


| | |
|---|---|
| P.A.: | DREW ROMANIC |
| P.M.: | JASON DECAMPLI |
| DRAWN BY: | Author |
| PROJECT NO: | 1362-12 |

| NO. | REVISION | DATE |
|---|---|---|
| 1 | PERMIT SET | 12/20/22 |

STAIR 3 PLANS

**Granite Run Apartment 02**

MIDDLETOWN TOWNSHIP, PA

SCALE:
DATE: 08/15/22

**A6.02**


©2022, The Martin Architectural Group, P.C.


Printed: 1/13/2023 4:52:19 PM

**THIS STAIR HAS BEEN SUBMITTED VIA THE GARAGE PERMIT SET RELEASED 12/7/22. THIS AREA IS INCLUDED HERE IS FOR COORDINATION AND UNDERSTANDING OF THE FUNCTION OF THE APARTMENT.**

## STAIR FINISH SCHEDULE

| NAME | LEVEL | WALL FINISH | CIELING FINISH | LANDING FINISH | TREAD FINISH | RISER FINISH | COMMENTS |
|---|---|---|---|---|---|---|---|
| STAIR 1 | GROUND | PAINTED CMU | | VCT | RUBBER | STEEL | |
| STAIR 1 | 2-4 | PAINTED CMU | PAINTED GWB | VCT | RUBBER | STEEL | |
| STAIR 2 | GROUND | PAINTED CMU | | VCT | RUBBER | STEEL | |
| STAIR 2 | 2-4 | PAINTED CMU | PAINTED GWB | VCT | RUBBER | STEEL | |
| STAIR 3 | ALL | | | | | | STAIR BY GARAGE PRECASTER |
| STAIR 4 | ALL | | | | | | STAIR BY GARAGE PRECASTER |
| STAIR 5 | GROUND | PAINTED CMU | | VCT | | STEEL | |
| STAIR 5 | 2-4 | PAINTED CMU | PAINTED GWB | VCT | RUBBER | STEEL | |
| STAIR 6 | GROUND | PAINTED CMU | | VCT | RUBBER | STEEL | |
| STAIR 6 | 2-4 | PAINTED CMU | PAINTED GWB | VCT | RUBBER | STEEL | |
| STAIR 7 | GROUND | PAINTED CMU | | VCT | RUBBER | STEEL | |
| STAIR 7 | 2-4 | PAINTED CMU | PAINTED GWB | VCT | RUBBER | STEEL | |
| STAIR 8 | ALL | PAINTED CMU | | VCT | RUBBER | STEEL | |
| STAIR 9 | ALL | GYPSUM WALL BOARD | PAINTED GWB | VCT | RUBBER | STEEL | |

**ALL STRINGERS, RISERS & HANDRAILS PAINTED.**

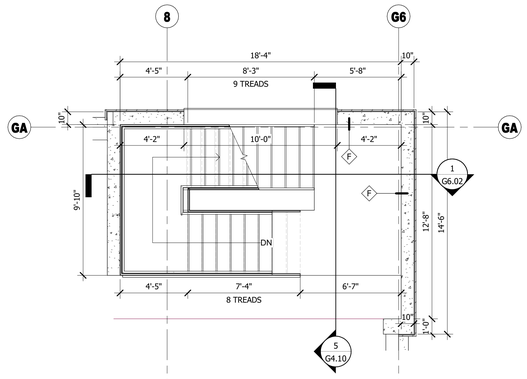


## 6 STAIR 4 PLAN - UPPER FLOORS
SCALE : 1/4" = 1'-0"

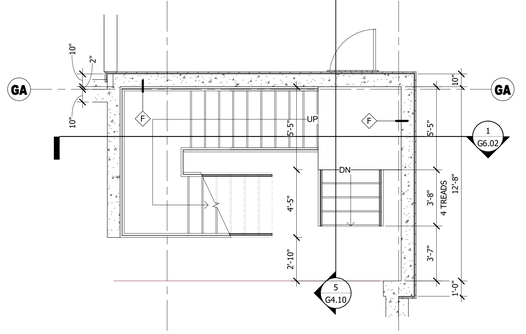


## 7 STAIR 4 PLAN - GROUND LEVEL
SCALE : 1/4" = 1'-0"

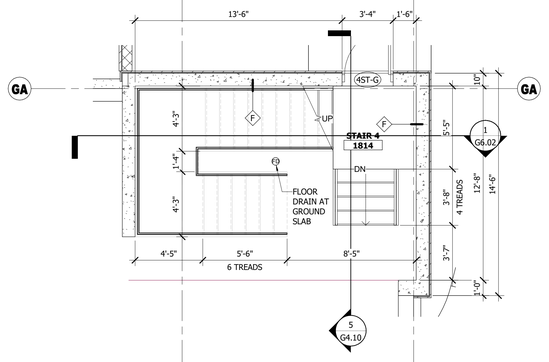


## 5 STAIR 4 PLAN - LEVEL L
SCALE : 1/4" = 1'-0"

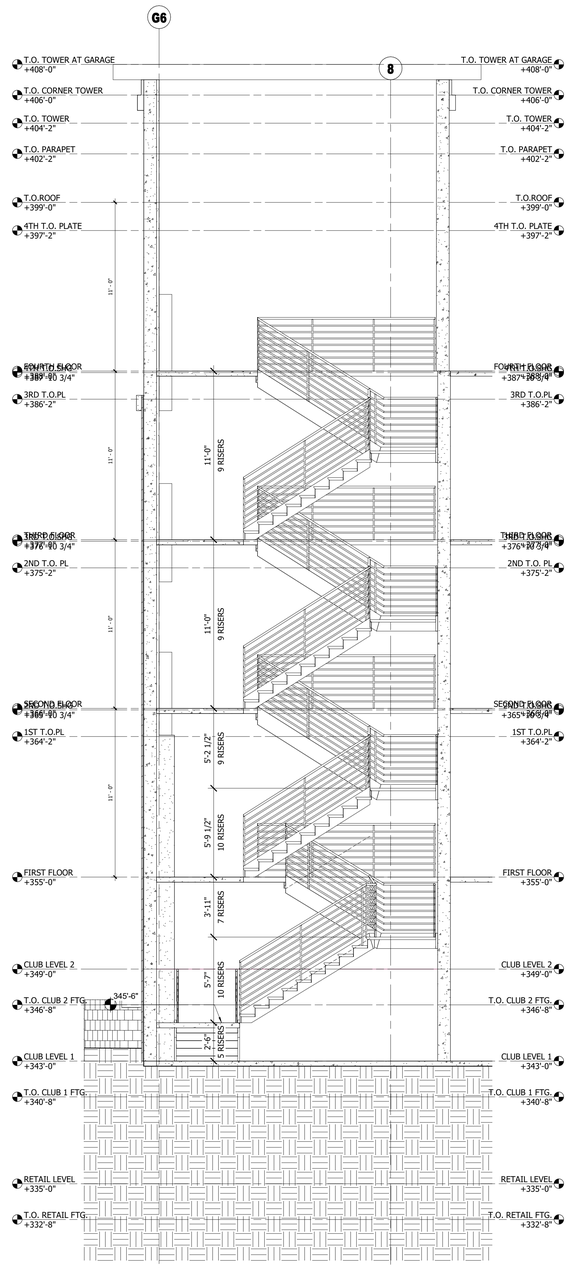


## 1 STAIR 4 SECTION
SCALE : 1/4" = 1'-0"


ALL REPORTS, PLANS, SPECIFICATIONS AND COMPUTER FILES RELATING TO THIS PROJECT ARE THE PROPERTY OF THE MARTIN ARCHITECTURAL GROUP. THE MARTIN ARCHITECTURAL GROUP RETAINS ALL COMMON LAW, STATUTE AND OTHER RESERVED RIGHTS INCLUDING THE COPY-RIGHT THERETO. REPRODUCTION OF THE MATERIAL HEREIN OR SUBSTANTIAL USE WITHOUT WRITTEN PERMISSION OF THE MARTIN ARCHITECTURAL GROUP VIOLATES THE COPYRIGHT LAWS OF THE UNITED STATES AND WILL BE SUBJECT TO LEGAL PROSECUTION.
©2022, The Martin Architectural Group, P.C.


NIC

COMMONWEALTH OF PENNSYLVANIA REGISTERED ARCHITECT DREW ROMANIC No. RA009178

Professi
I hereby prepare this/ laws of

Professi License Expiratic


THE MARTIN ARCHITECTURAL GROUP, P.C.
ARCHITECTS AND LAND PLANNERS
A PROFESSIONAL CORPORATION
240 NORTH 22ND STREET, PHILADELPHIA, PA, 19103
P (215) 665-1600 F (215) 561-5664


| | |
|---|---|
| P.A.: | DREW ROMANIC |
| P.M.: | JASON DECAMPLI |
| DRAWN BY: | MAG |
| PROJECT NO: | 1362-12 |

| NO. | REVISION | DATE |
|---|---|---|
| 1 | PERMIT SET | 12/2022 |

STAIR 4 PLANS

**Granite Run Apartment 02**

MIDDLETOWN TOWNSHIP, PA

| | |
|---|---|
| SCALE: | AS NOTED |
| DATE: | 12/31/2017 |

**A6.03**


©2022, The Martin Architectural Group, P.C.


Printed: 1/13/2023 4:52:24 PM

| STAIR FINISH SCHEDULE | | | | | | | |
|---|---|---|---|---|---|---|---|
| NAME | LEVEL | WALL FINISH | CIELING FINISH | LANDING FINISH | TREAD FINISH | RISER FINISH | COMMENTS |
| STAIR 1 | GROUND | PAINTED CMU | | VCT | RUBBER | STEEL | |
| STAIR 1 | 2-4 | PAINTED CMU | PAINTED GWB | VCT | RUBBER | STEEL | |
| STAIR 2 | GROUND | PAINTED CMU | | VCT | RUBBER | STEEL | |
| STAIR 2 | 2-4 | PAINTED CMU | PAINTED GWB | VCT | RUBBER | STEEL | |
| STAIR 3 | ALL | | | | | | STAIR BY GARAGE PRECASTER |
| STAIR 4 | ALL | | | | | | STAIR BY GARAGE PRECASTER |
| STAIR 5 | GROUND | PAINTED CMU | | VCT | | STEEL | |
| STAIR 5 | 2-4 | PAINTED CMU | PAINTED GWB | VCT | RUBBER | STEEL | |
| STAIR 6 | GROUND | PAINTED CMU | | VCT | RUBBER | STEEL | |
| STAIR 6 | 2-4 | PAINTED CMU | PAINTED GWB | VCT | RUBBER | STEEL | |
| STAIR 7 | GROUND | PAINTED CMU | | VCT | RUBBER | STEEL | |
| STAIR 7 | 2-4 | PAINTED CMU | PAINTED GWB | VCT | RUBBER | STEEL | |
| STAIR 8 | ALL | PAINTED CMU | | VCT | RUBBER | STEEL | |
| STAIR 9 | ALL | GYPSUM WALL BOARD | PAINTED GWB | VCT | RUBBER | STEEL | |

ALL STRINGERS, RISERS & HANDRAILS PAINTED.

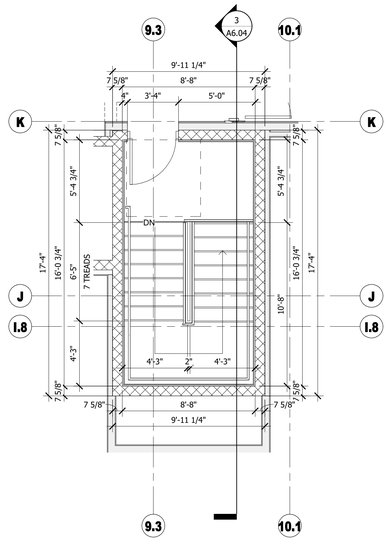


2 STAIR 9 - FLOOR 1
SCALE : 1/4" = 1'-0"

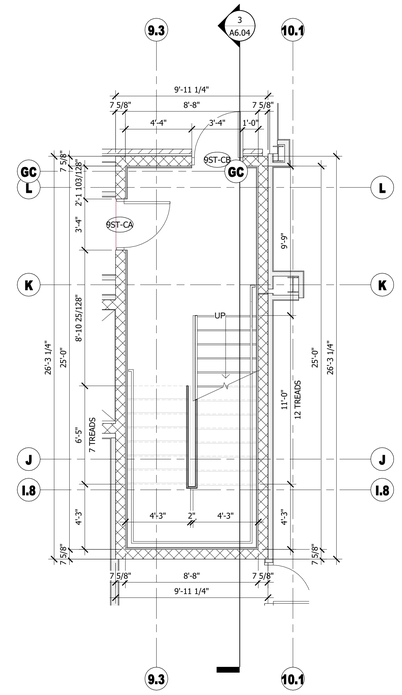


1 STAIR 9 PLAN - GROUND LEVEL
SCALE : 1/4" = 1'-0"

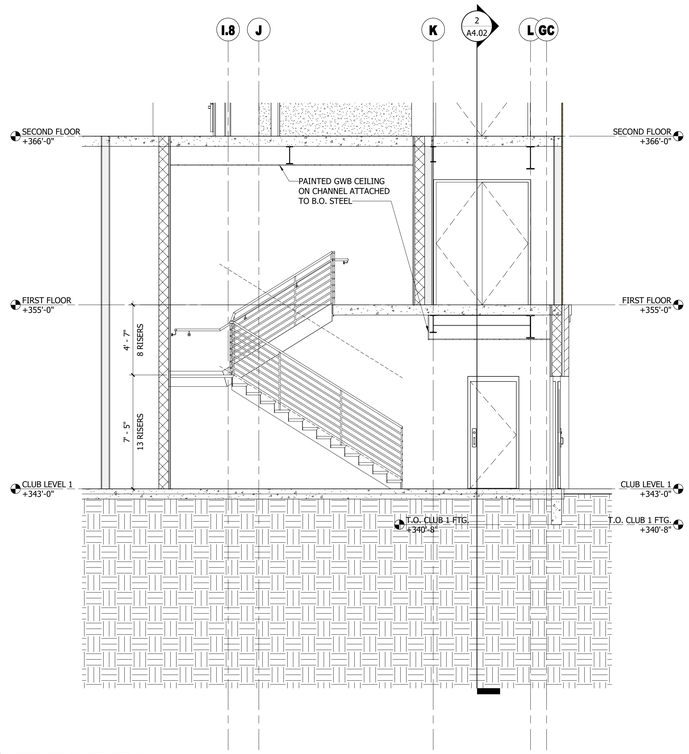


3 STAIR 9 SECTION
SCALE : 1/4" = 1'-0"


ALL REPORTS, PLANS, SPECIFICATIONS AND COMPUTER FILES RELATING TO THIS PROJECT ARE THE PROPERTY OF THE MARTIN ARCHITECTURAL GROUP. THE MARTIN ARCHITECTURAL GROUP RETAINS ALL COMMON LAW, STATUTE AND OTHER RESERVED RIGHTS INCLUDING THE COPYRIGHT THERETO. REPRODUCTION OF THE MATERIAL HEREIN OR SUBSTANTIAL USE WITHOUT WRITTEN PERMISSION OF THE MARTIN ARCHITECTURAL GROUP VIOLATES THE COPYRIGHT LAWS OF THE UNITED STATES AND WILL BE SUBJECT TO LEGAL PROSECUTION.
©2022, The Martin Architectural Group, P.C.





Professi
I hereby prepare
duly lice
laws of t
Professi
License
Expiratio
NIC


THE MARTIN ARCHITECTURAL GROUP, P.C.
ARCHITECTS AND LAND PLANNERS
A PROFESSIONAL CORPORATION
240 NORTH 22ND STREET, PHILADELPHIA, PA, 19103
P (215) 665-1080 F (215) 561-5064


| | |
|---|---|
| P.A.: | DREW ROMANIC |
| P.M.: | JASON DECAMPLI |
| DRAWN BY: | MAG |
| PROJECT NO: | 1362-12 |

| NO. | REVISION | DATE |
|---|---|---|
| 1 | PERMIT SET | 12/20/22 |

STAIR 9 PLANS

**Granite Run Apartment 02**

MIDDLETOWN TOWNSHIP, PA

| | |
|---|---|
| SCALE: | AS NOTED |
| DATE: | 12/31/2017 |

# A6.04


©2022, The Martin Architectural Group, P.C.


Printed: 1/13/2023 4:52:27 PM

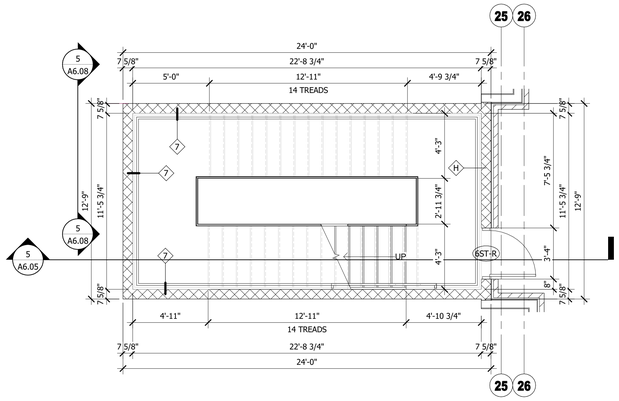


## 6 STAIR 6 PLAN - GROUND LEVEL
**SCALE : 1/4" = 1'-0"**

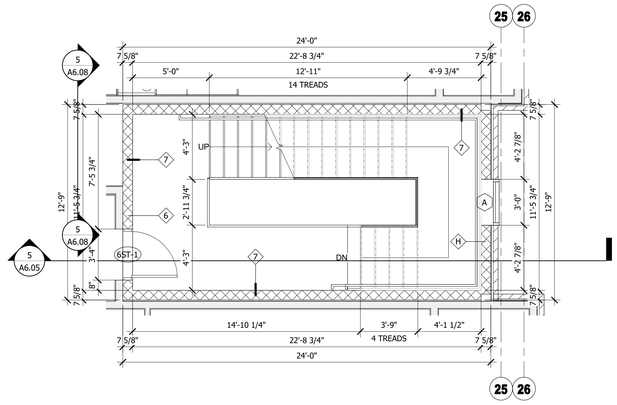


## 7 STAIR 6 PLAN - UPPER FLOORS
**SCALE : 1/4" = 1'-0"**

| STAIR FINISH SCHEDULE | | | | | | | |
|---|---|---|---|---|---|---|---|
| **NAME** | **LEVEL** | **WALL FINISH** | **CIELING FINISH** | **LANDING FINISH** | **TREAD FINISH** | **RISER FINISH** | **COMMENTS** |
| **STAIR 1** | **GROUND** | **PAINTED CMU** | | **VCT** | **RUBBER** | **STEEL** | |
| **STAIR 1** | **2-4** | **PAINTED CMU** | **PAINTED GWB** | **VCT** | **RUBBER** | **STEEL** | |
| **STAIR 2** | **GROUND** | **PAINTED CMU** | | **VCT** | **RUBBER** | **STEEL** | |
| **STAIR 2** | **2-4** | **PAINTED CMU** | **PAINTED GWB** | **VCT** | **RUBBER** | **STEEL** | |
| **STAIR 3** | **ALL** | | | | | | **STAIR BY GARAGE PRECASTER** |
| **STAIR 4** | **ALL** | | | | | | **STAIR BY GARAGE PRECASTER** |
| **STAIR 5** | **GROUND** | **PAINTED CMU** | | **VCT** | | **STEEL** | |
| **STAIR 5** | **2-4** | **PAINTED CMU** | **PAINTED GWB** | **VCT** | **RUBBER** | **STEEL** | |
| **STAIR 6** | **GROUND** | **PAINTED CMU** | | **VCT** | **RUBBER** | **STEEL** | |
| **STAIR 6** | **2-4** | **PAINTED CMU** | **PAINTED GWB** | **VCT** | **RUBBER** | **STEEL** | |
| **STAIR 7** | **GROUND** | **PAINTED CMU** | | **VCT** | **RUBBER** | **STEEL** | |
| **STAIR 7** | **2-4** | **PAINTED CMU** | **PAINTED GWB** | **VCT** | **RUBBER** | **STEEL** | |
| **STAIR 8** | **ALL** | **PAINTED CMU** | | **VCT** | **RUBBER** | **STEEL** | |
| **STAIR 9** | **ALL** | **GYPSUM WALL BOARD** | **PAINTED GWB** | **VCT** | **RUBBER** | **STEEL** | |

**ALL STRINGERS, RISERS & HANDRAILS PAINTED.**

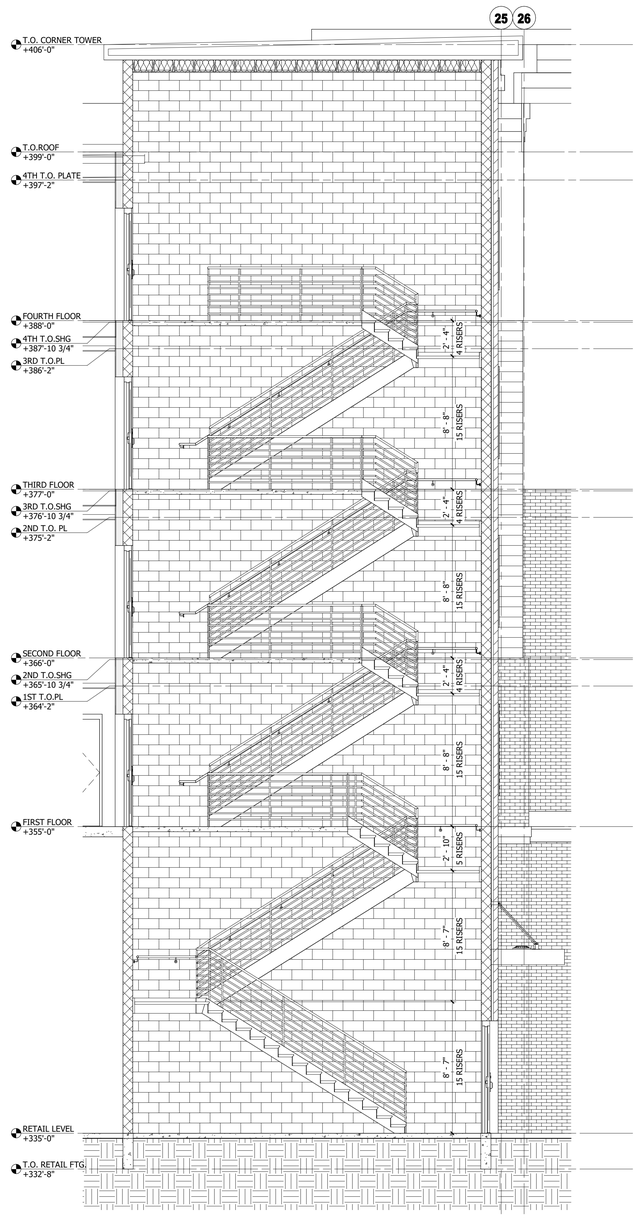


## 5 STAIR 6 SECTION
**SCALE : 1/4" = 1'-0"**

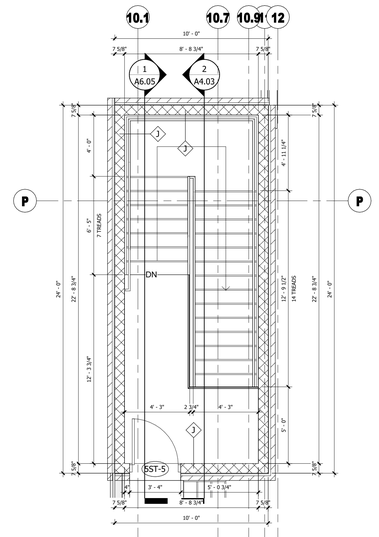


## 4 STAIR 5 PLAN - ROOF ACCESS
**SCALE : 1/4" = 1'-0"**

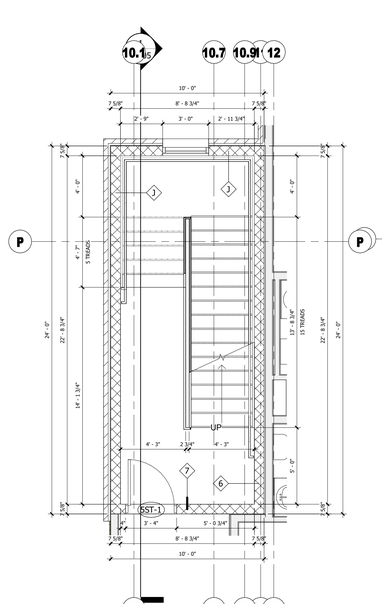


## 3 STAIR 5 PLAN - UPPER FLOORS
**SCALE : 1/4" = 1'-0"**

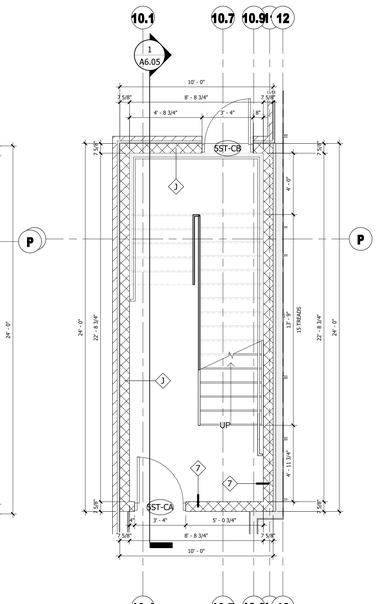


## 2 STAIR 5 PLAN - GROUND LEVEL
**SCALE : 1/4" = 1'-0"**

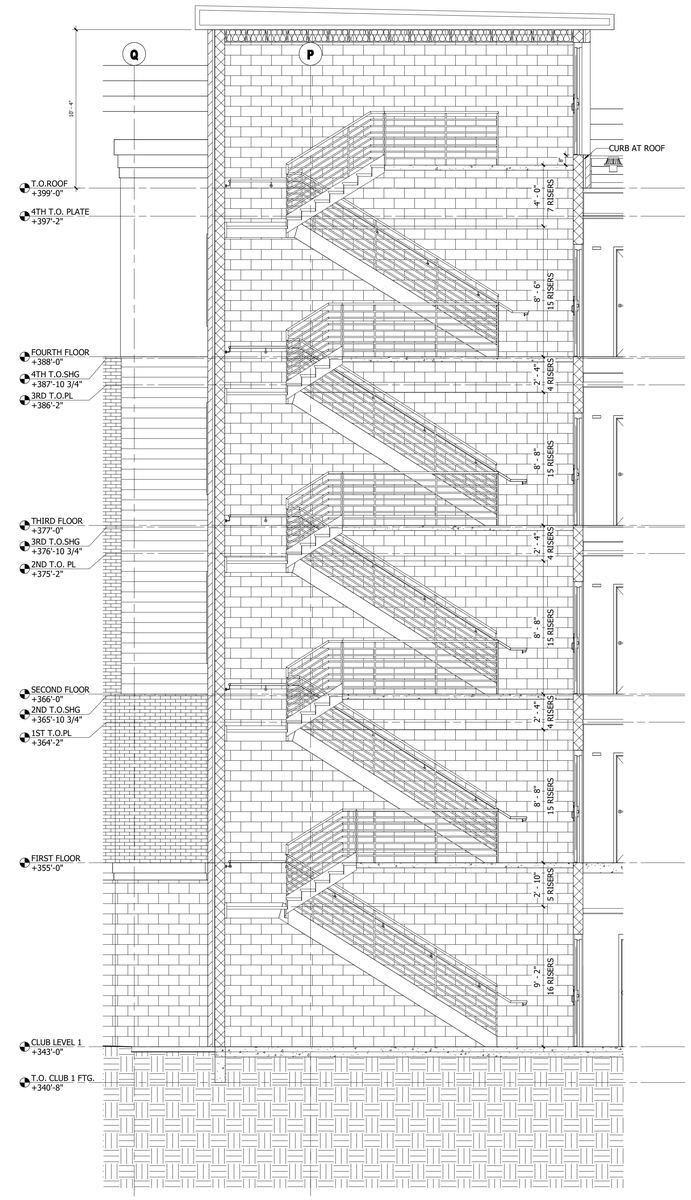


## 1 STAIR 5 SECTION
**SCALE : 1/4" = 1'-0"**

ALL REPORTS, PLANS, SPECIFICATIONS AND COMPUTER FILES RELATING TO THIS PROJECT ARE THE PROPERTY OF THE MARTIN ARCHITECTURAL GROUP. THE MARTIN ARCHITECTURAL GROUP RETAINS ALL COMMON LAW, STATUTE AND OTHER RESERVED RIGHTS INCLUDING THE COPYRIGHT THERETO. REPRODUCTION OF THE MATERIAL HEREIN OR SUBSTANTIAL USE WITHOUT WRITTEN PERMISSION OF THE MARTIN ARCHITECTURAL GROUP VIOLATES THE COPYRIGHT LAWS OF THE UNITED STATES AND WILL BE SUBJECT TO LEGAL PROSECUTION.
©2022, The Martin Architectural Group, P.C.

REGISTERED ARCHITECT COMMONWEALTH OF PENNSYLVANIA DREW ROMANIC No. RA409078

THE MARTIN ARCHITECTURAL GROUP, P.C.
ARCHITECTS AND LAND PLANNERS
A PROFESSIONAL CORPORATION
240 NORTH 22ND STREET, PHILADELPHIA, PA, 19103
P (215) 665-1680 F (215) 561-5064

| | |
|---|---|
| P.A.: | DREW ROMANIC |
| P.M.: | JASON DECAMPLI |
| DRAWN BY: | Author |
| PROJECT NO: | 1362-12 |

| NO. | REVISION | DATE |
|---|---|---|
| 1 | PERMIT SET | 12/20/22 |

STAIR 5&6 PLANS
**Granite Run Apartment 02**
MIDDLETOWN TOWNSHIP, PA

SCALE:
DATE: 07/13/22

**A6.05**

©2022, The Martin Architectural Group, P.C.

Printed: 1/13/2023 4:52:38 PM

## STAIR FINISH SCHEDULE

| NAME | LEVEL | WALL FINISH | CIELING FINISH | LANDING FINISH | TREAD FINISH | RISER FINISH | COMMENTS |
|---|---|---|---|---|---|---|---|
| STAIR 1 | GROUND | PAINTED CMU | | VCT | RUBBER | STEEL | |
| STAIR 1 | 2-4 | PAINTED CMU | PAINTED GWB | VCT | RUBBER | STEEL | |
| STAIR 2 | GROUND | PAINTED CMU | | VCT | RUBBER | STEEL | |
| STAIR 2 | 2-4 | PAINTED CMU | PAINTED GWB | VCT | RUBBER | STEEL | |
| STAIR 3 | ALL | | | | | | STAIR BY GARAGE PRECASTER |
| STAIR 4 | ALL | | | | | | STAIR BY GARAGE PRECASTER |
| STAIR 5 | GROUND | PAINTED CMU | | VCT | | STEEL | |
| STAIR 5 | 2-4 | PAINTED CMU | PAINTED GWB | VCT | RUBBER | STEEL | |
| STAIR 6 | GROUND | PAINTED CMU | | VCT | RUBBER | STEEL | |
| STAIR 6 | 2-4 | PAINTED CMU | PAINTED GWB | VCT | RUBBER | STEEL | |
| STAIR 7 | GROUND | PAINTED CMU | | VCT | RUBBER | STEEL | |
| STAIR 7 | 2-4 | PAINTED CMU | PAINTED GWB | VCT | RUBBER | STEEL | |
| STAIR 8 | ALL | PAINTED CMU | | VCT | RUBBER | STEEL | |
| STAIR 9 | ALL | GYPSUM WALL BOARD | PAINTED GWB | VCT | RUBBER | STEEL | |

**ALL STRINGERS, RISERS & HANDRAILS PAINTED.**

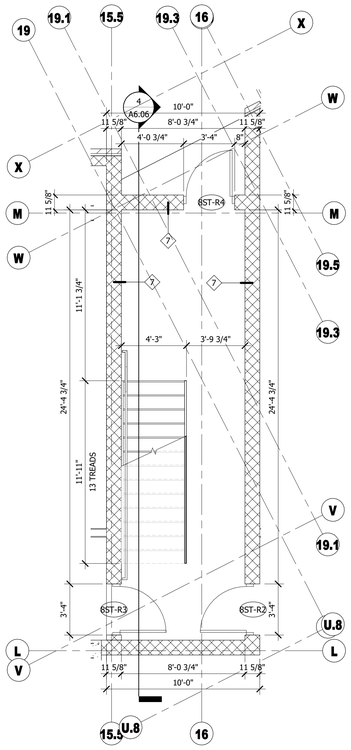


## 5 STAIR 8 PLAN - GROUND LEVEL
SCALE : 1/4" = 1'-0"

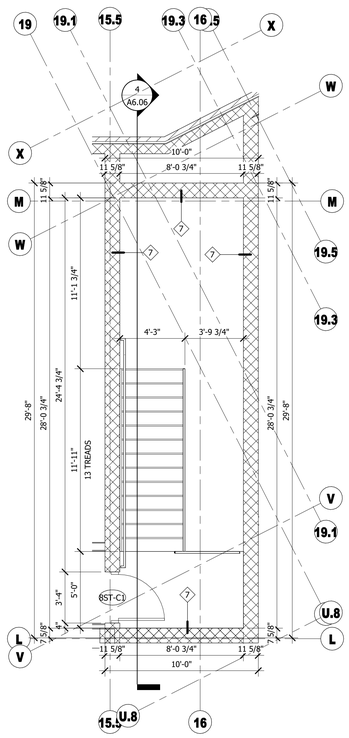


## 6 STAIR 8 PLAN - CLUBHOUSE LEVEL
SCALE : 1/4" = 1'-0"

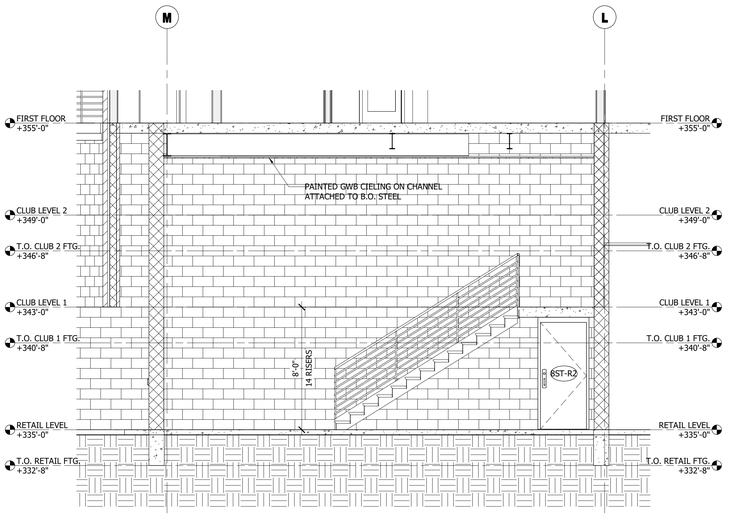


## 4 STAIR 8 SECTION
SCALE : 1/4" = 1'-0"

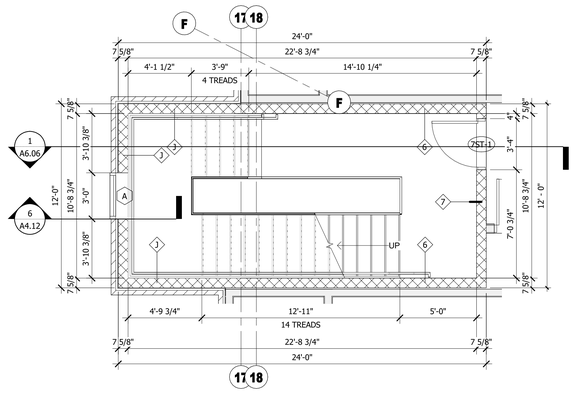


## 3 STAIR 7 PLAN - UPPER FLOORS
SCALE : 1/4" = 1'-0"

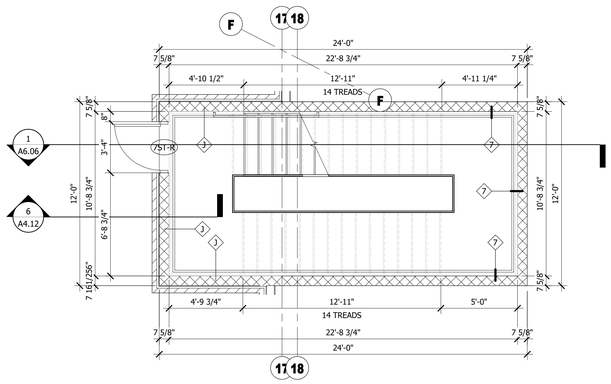


## 2 STAIR 7 PLAN - GROUND LEVEL
SCALE : 1/4" = 1'-0"

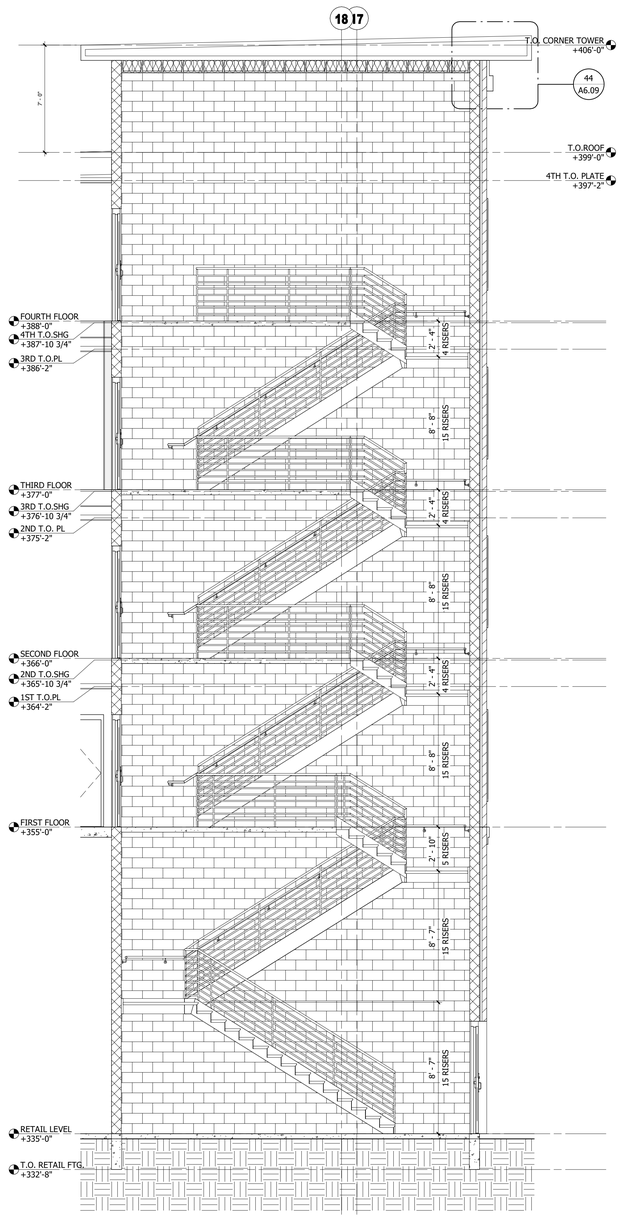


## 1 STAIR 7 SECTION
SCALE : 1/4" = 1'-0"

ALL REPORTS, PLANS, SPECIFICATIONS AND COMPUTER FILES RELATING TO THIS PROJECT ARE THE PROPERTY OF THE MARTIN ARCHITECTURAL GROUP. THE MARTIN ARCHITECTURAL GROUP RETAINS ALL COMMON LAW, STATUTE AND OTHER RESERVED RIGHTS INCLUDING THE COPY-RIGHT THERETO. REPRODUCTION OF THE MATERIAL HEREIN OR SUBSTANTIAL USE WITHOUT WRITTEN PERMISSION OF THE MARTIN ARCHITECTURAL GROUP VIOLATES THE COPYRIGHT LAWS OF THE UNITED STATES AND WILL BE SUBJECT TO LEGAL PROSECUTION.
©2022, The Martin Architectural Group, P.C.

REGISTERED ARCHITECT COMMONWEALTH OF PENNSYLVANIA DREW ROMANIC No. RA009178

THE MARTIN ARCHITECTURAL GROUP, P.C.
ARCHITECTS AND LAND PLANNERS
A PROFESSIONAL CORPORATION
240 NORTH 22ND STREET, PHILADELPHIA, PA, 19103
P (215) 665-1600 F (215) 561-5064

| | |
|---|---|
| P.A.: | DREW ROMANIC |
| P.M.: | JASON DECAMPLI |
| DRAWN BY: | Author |
| PROJECT NO: | 1362-12 |

| NO. | REVISION | DATE |
|---|---|---|
| 1 | PERMIT SET | 12/30/22 |

# STAIR 7&8 PLANS
## Granite Run Apartment 02
MIDDLETOWN TOWNSHIP, PA

SCALE:
DATE: 07/27/22

# A6.06
©2022, The Martin Architectural Group, P.C.

Printed: 1/13/2023 4:52:45 PM

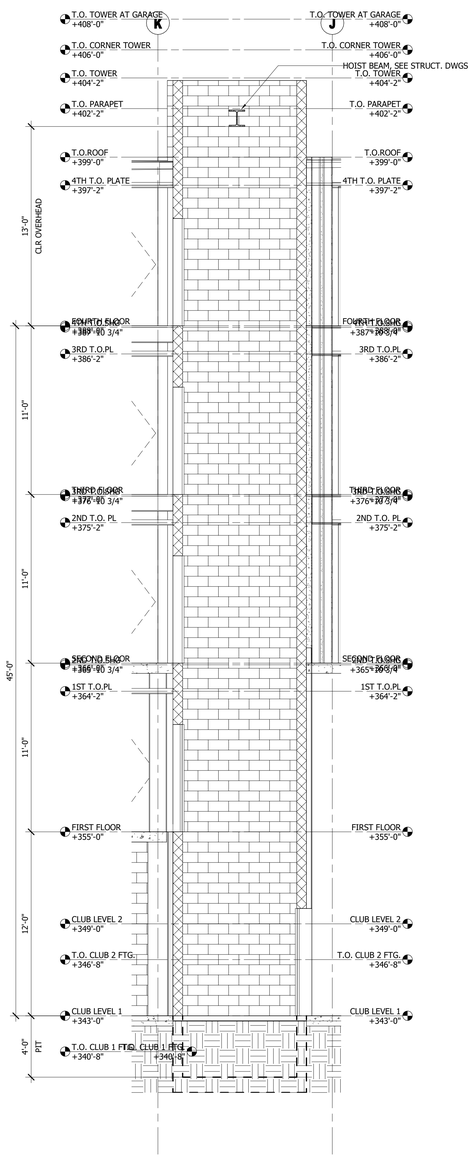


3 **ELEVATOR 2 SECTION**
SCALE : 1/4" = 1'-0"

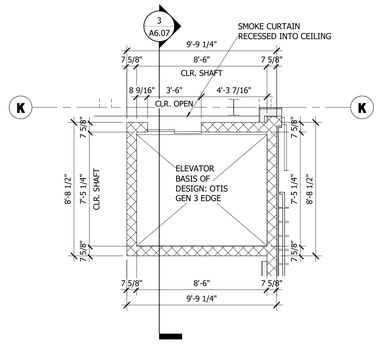


4 **ELEVATOR 2 PLAN**
SCALE : 1/4" = 1'-0"

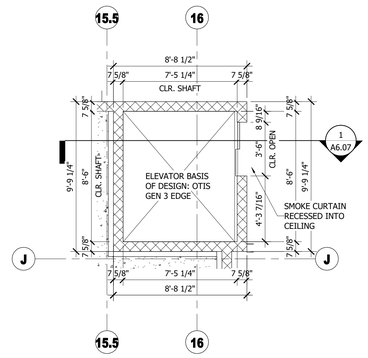


2 **ELEVATOR 1 PLAN**
SCALE : 1/4" = 1'-0"

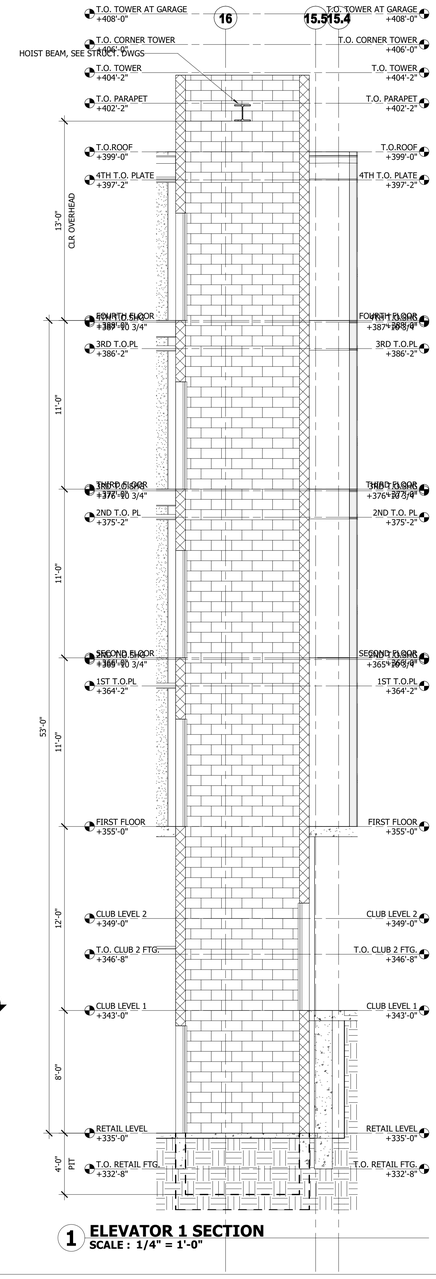


1 **ELEVATOR 1 SECTION**
SCALE : 1/4" = 1'-0"


ALL REPORTS, PLANS, SPECIFICATIONS AND COMPUTER FILES RELATING TO THIS PROJECT ARE THE PROPERTY OF THE MARTIN ARCHITECTURAL GROUP. THE MARTIN ARCHITECTURAL GROUP RETAINS ALL COMMON LAW, STATUTE AND OTHER RESERVED RIGHTS INCLUDING THE COPYRIGHT THERETO. REPRODUCTION OF THE MATERIAL HEREIN OR SUBSTANTIAL USE WITHOUT WRITTEN PERMISSION OF THE MARTIN ARCHITECTURAL GROUP VIOLATES THE COPYRIGHT LAWS OF THE UNITED STATES AND WILL BE SUBJECT TO LEGAL PROSECUTION.
©2022, The Martin Architectural Group, P.C.






THE MARTIN ARCHITECTURAL GROUP, P.C.
ARCHITECTS AND LAND PLANNERS
A PROFESSIONAL CORPORATION
240 NORTH 22ND STREET, PHILADELPHIA, PA, 19103
P (215) 665-1080 F (215) 561-5064


| | |
|---|---|
| P.A.: | DREW ROMANIC |
| P.M.: | JASON DECAMPLI |
| DRAWN BY: | Author |
| PROJECT NO: | 1362-12 |

| NO. | REVISION | DATE |
|---|---|---|
| 1 | PERMIT SET | 12/20/22 |

# ELEVATOR 1&2 PLANS
## Granite Run Apartment 02
MIDDLETOWN TOWNSHIP, PA

SCALE:
DATE: 07/13/22

# A6.07


©2022, The Martin Architectural Group, P.C.



Printed: 1/13/2023 4:52:49 PM

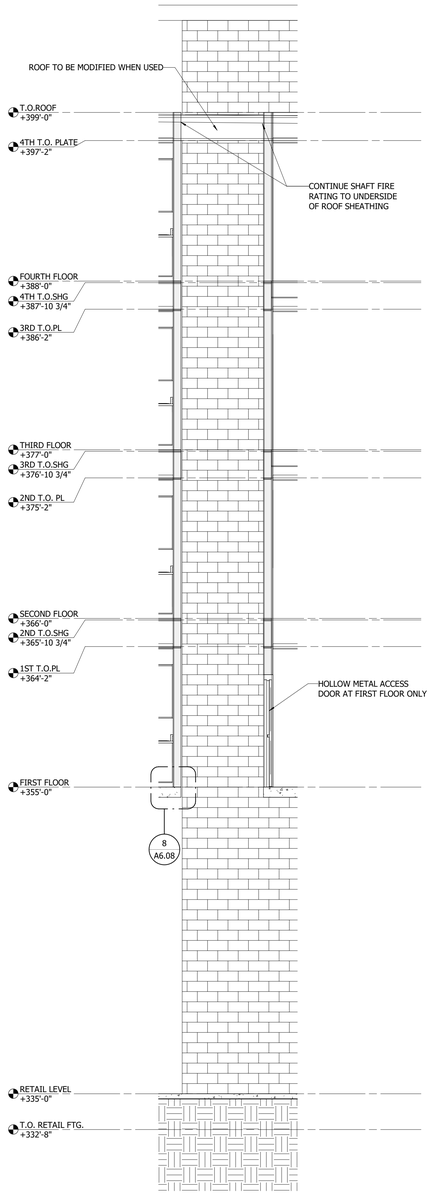


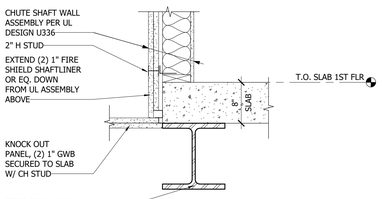


**8 MECH SHAFT TERMINATION AT CIELING**
SCALE : 1" = 1'-0"

**5 TYP. MECH. SHAFT SECTION**
SCALE : 1/4" = 1'-0"

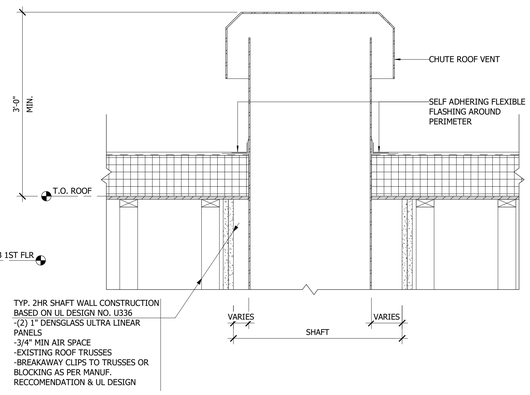


**7 TRASH SHAFT TERMINATION AT CEILING**
SCALE : 1" = 1'-0"

**6 TYP. 2HR VENT SHAFT AT ROOF**
SCALE : 1" = 1'-0"

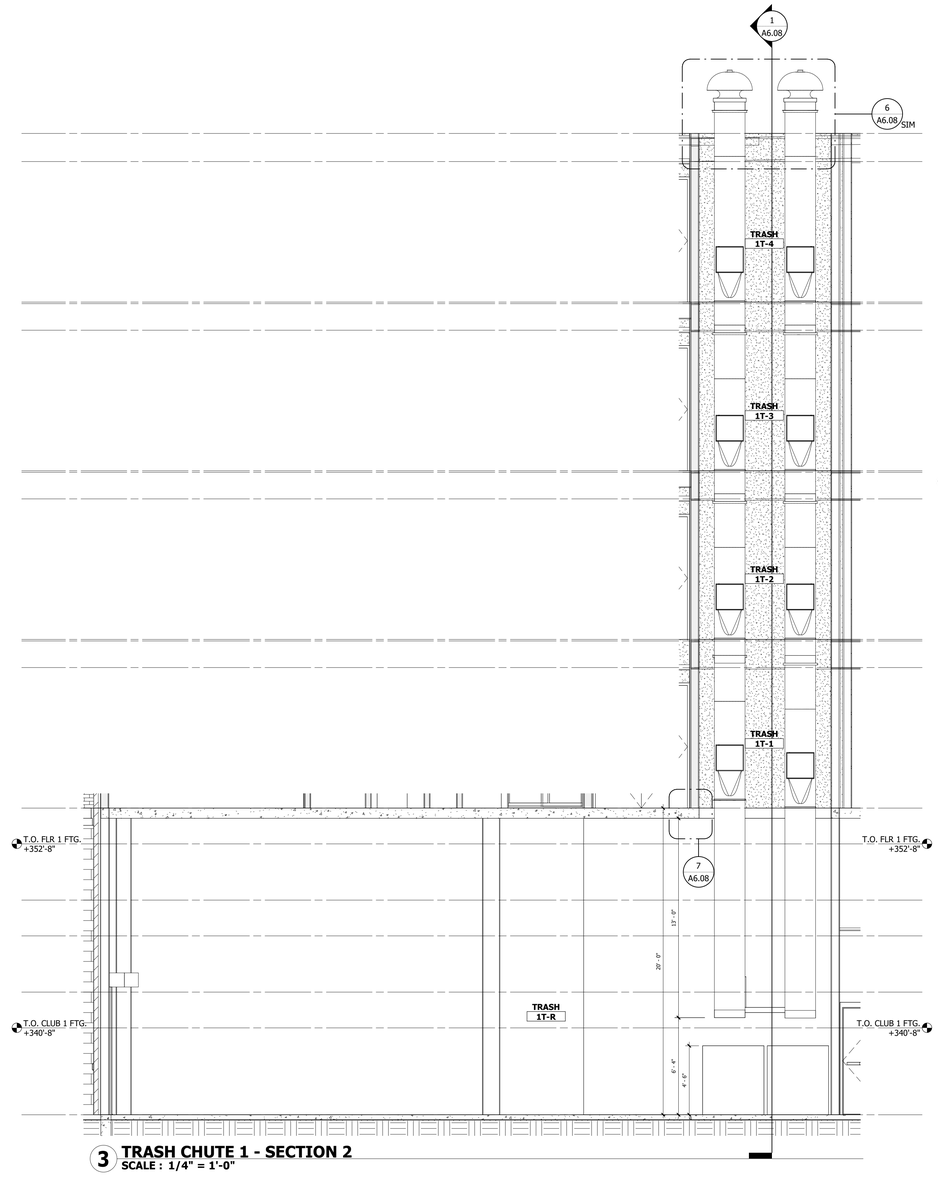


**3 TRASH CHUTE 1 - SECTION 2**
SCALE : 1/4" = 1'-0"

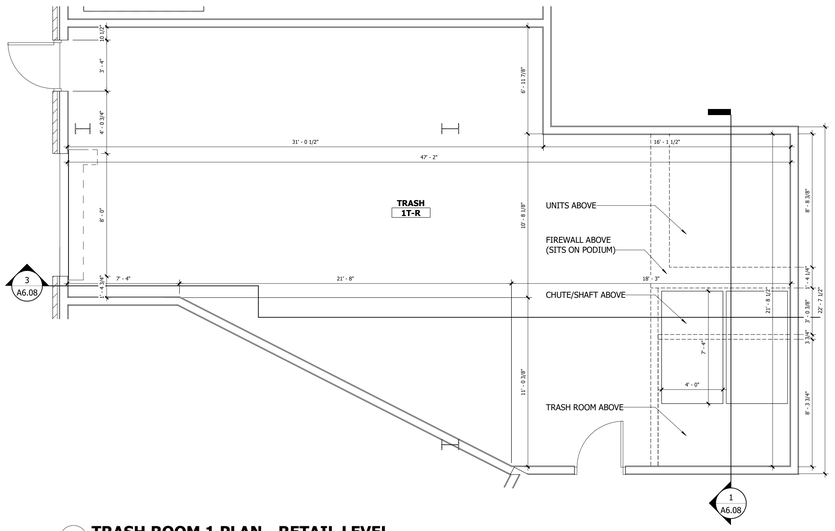


**4 TRASH ROOM 1 PLAN - RETAIL LEVEL**
SCALE : 1/4" = 1'-0"

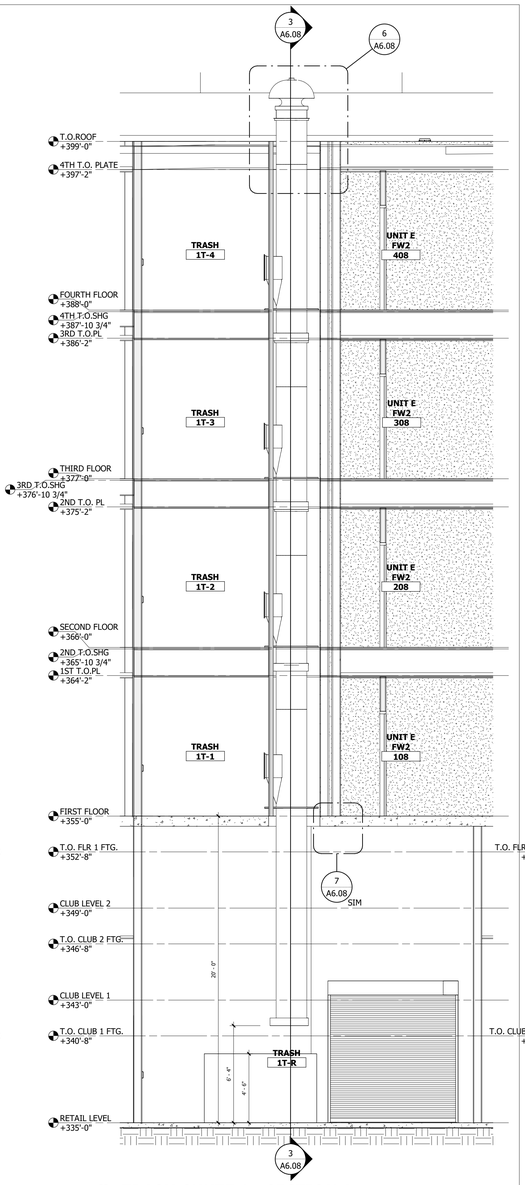


**1 TRASH CHUTE 1 - SECTION 1**
SCALE : 1/4" = 1'-0"

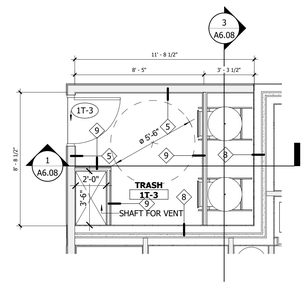


**2 TRASH ROOM 1 PLAN - LEVELS 1-4**
SCALE : 1/4" = 1'-0" (EXAMPLE LEVEL 3)

ALL REPORTS, PLANS, SPECIFICATIONS AND COMPUTER FILES RELATING TO THIS PROJECT ARE THE PROPERTY OF THE MARTIN ARCHITECTURAL GROUP. THE MARTIN ARCHITECTURAL GROUP RETAINS ALL COMMON LAW, STATUTE AND OTHER RESERVED RIGHTS INCLUDING THE COPY-RIGHT THERETO. REPRODUCTION OF THE MATERIAL HEREIN OR SUBSTANTIAL USE WITHOUT WRITTEN PERMISSION OF THE MARTIN ARCHITECTURAL GROUP VIOLATES THE COPYRIGHT LAWS OF THE UNITED STATES AND WILL BE SUBJECT TO LEGAL PROSECUTION.
©2022, The Martin Architectural Group, P.C.

REGISTERED ARCHITECT PENNSYLVANIA DREW ROMANIC No. RA405115

THE MARTIN ARCHITECTURAL GROUP, P.C.
ARCHITECTS AND LAND PLANNERS
A PROFESSIONAL CORPORATION
240 NORTH 22ND STREET, PHILADELPHIA, PA, 19103
P (215) 665-1600 F (215) 561-5064

| | |
|---|---|
| P.A.: | DREW ROMANIC |
| P.M.: | JASON DECAMPLI |
| DRAWN BY: | Author |
| PROJECT NO: | 1362-12 |

| NO. | REVISION | DATE |
|---|---|---|
| 1 | PERMIT SET | 12/20/22 |

TRASH RM PLANS
**Granite Run Apartment 02**
MIDDLETOWN TOWNSHIP, PA

SCALE:
DATE: 07/13/22

**A6.08**

©2022, The Martin Architectural Group, P.C.

Printed: 1/13/2023 4:52:58 PM

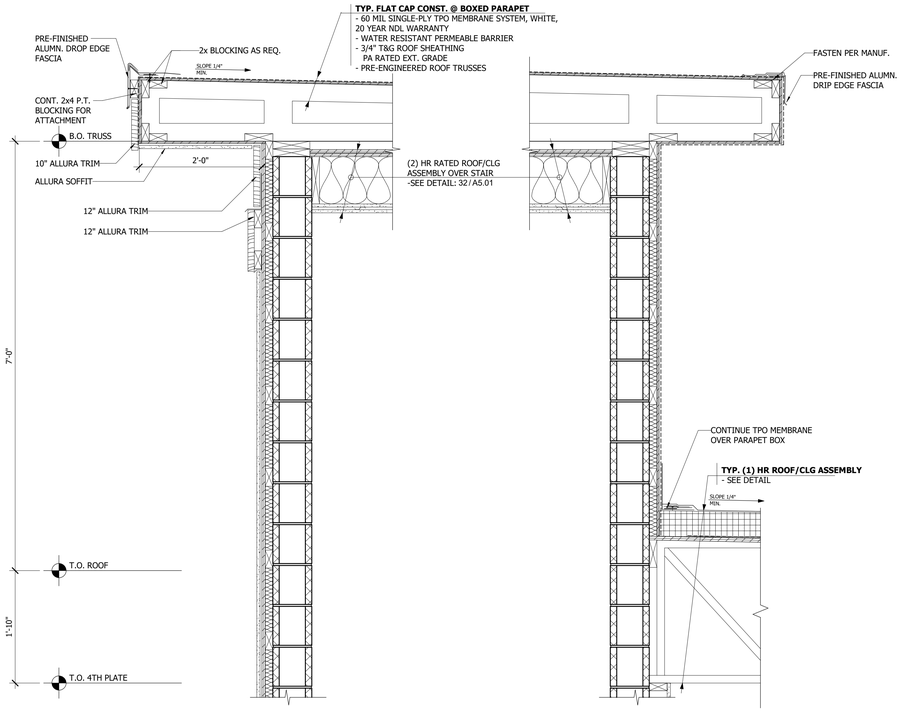


## 46 TYP. CONSTRUCTION @ STAIR ROOF
SCALE : 1" = 1'-0"

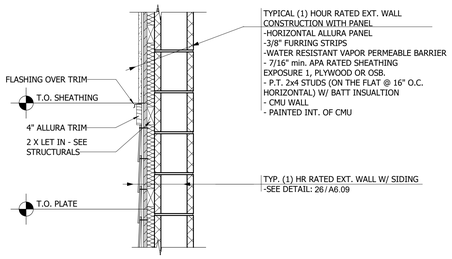


## 36 TYP. SIDING TO PANEL TRAN. @ STAIR
SCALE : 1" = 1'-0"

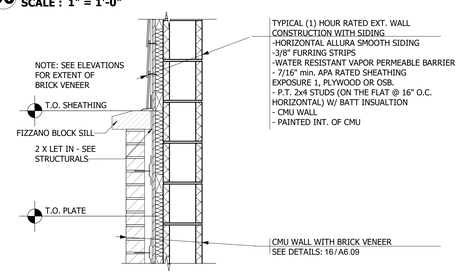


## 26 TYP. BRICK TO SIDING TRAN. @ STAIR
SCALE : 1" = 1'-0"

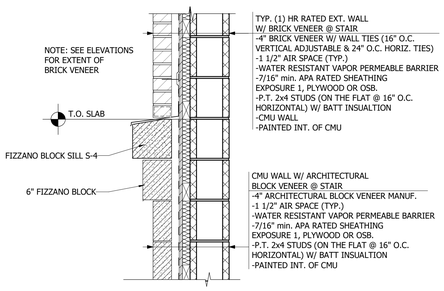


## 16 STONE TO BRICK TRANSITION @ STAIR
SCALE : 1" = 1'-0"

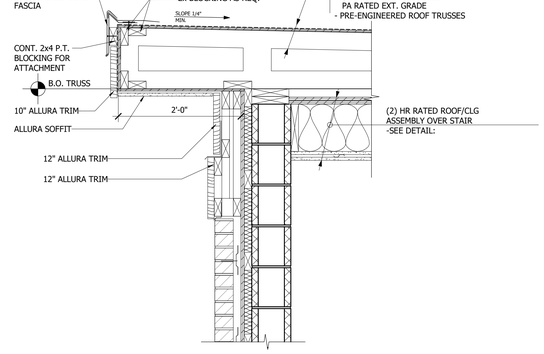


## 44 ROOF CONST @ STAIR 7
SCALE : 1" = 1'-0"

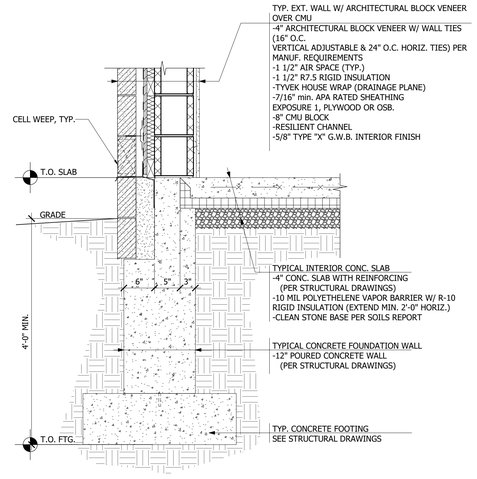


## 14 TYP. FOUNDATION @ STAIR TOWER
SCALE : 1" = 1'-0"

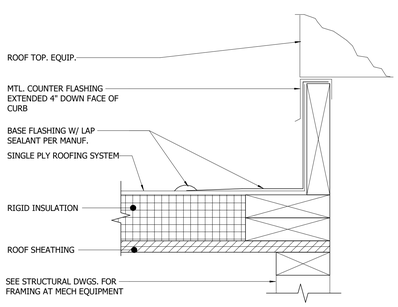


## 32 MECHANICAL ROOF CURB
SCALE : 3" = 1'-0"

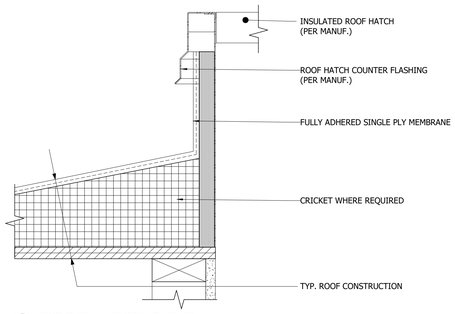


## 22 ROOF HATCH CURB
SCALE : 3" = 1'-0"

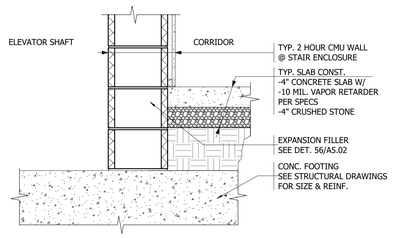


## 12 FOUNDATION WALL @ ELEVATOR/ CORR.
SCALE : 1" = 1'-0"




## 42 CEILING @ STAIR/ ELEVATOR ENCLOSURE
SCALE : 1" = 1'-0"

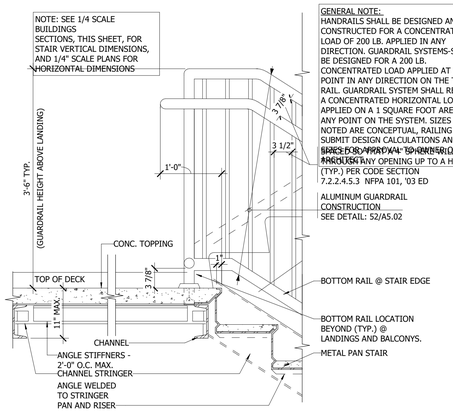


## 40 STAIRWAY CONST. @ SECOND FLOOR
SCALE : 1" = 1'-0"




## 20 STAIRWAY CONST. @ INTERMEDIATE LANDING
SCALE : 1" = 1'-0"

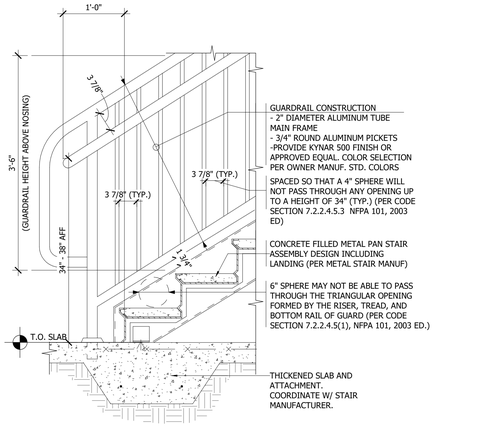


## 10 STAIRWAY CONST. @ FIRST FLOOR
SCALE : 1" = 1'-0"

ALL REPORTS, PLANS, SPECIFICATIONS AND COMPUTER FILES RELATING TO THIS PROJECT ARE THE PROPERTY OF THE MARTIN ARCHITECTURAL GROUP. THE MARTIN ARCHITECTURAL GROUP RETAINS ALL COMMON LAW, STATUTE AND OTHER RESERVED RIGHTS INCLUDING THE COPY-RIGHT THERETO. REPRODUCTION OF THE MATERIAL HEREIN OR SUBSTANTIAL USE WITHOUT WRITTEN PERMISSION OF THE MARTIN ARCHITECTURAL GROUP VIOLATES THE COPYRIGHT LAWS OF THE UNITED STATES AND WILL BE SUBJECT TO LEGAL PROSECUTION.
©2022, The Martin Architectural Group, P.C.

NIC

REGISTERED ARCHITECT COMMONWEALTH OF PENNSYLVANIA DREW ROMANIC No. RA405856

Professi
I hereby prepare to the laws of
Professi License Expiratic

THE MARTIN ARCHITECTURAL GROUP, P.C.
ARCHITECTS AND LAND PLANNERS
A PROFESSIONAL CORPORATION
240 NORTH 22ND STREET, PHILADELPHIA, PA, 19103
P (215) 665-1600 F (215) 561-5064

| | |
|---|---|
| P.A.: | DREW ROMANIC |
| P.M.: | JASON DECAMPLI |
| DRAWN BY: | MAG |
| PROJECT NO: | 1362-12 |

| NO. | REVISION | DATE |
|---|---|---|
| 1 | PERMIT SET | 12/20/22 |

STAIR AND ELEVATOR DETAILS

**Granite Run Apartment 02**

MIDDLETOWN TOWNSHIP, PA

| | |
|---|---|
| SCALE: | AS NOTED |
| DATE: | 12/31/2017 |

**A6.09**

©2022, The Martin Architectural Group, P.C.

Printed: 1/13/2023 4:53:02 PM

ALL REPORTS, PLANS, SPECIFICATIONS AND COMPUTER FILES RELATING TO THIS PROJECT ARE THE PROPERTY OF THE MARTIN ARCHITECTURAL GROUP. THE MARTIN ARCHITECTURAL GROUP RETAINS ALL COMMON LAW, STATUTE AND OTHER RESERVED RIGHTS INCLUDING THE COPY-RIGHT THERETO. REPRODUCTION OF THE MATERIAL HEREIN OR SUBSTANTIAL USE WITHOUT WRITTEN PERMISSION OF THE MARTIN ARCHITECTURAL GROUP VIOLATES THE COPYRIGHT LAWS OF THE UNITED STATES AND WILL BE SUBJECT TO LEGAL PROSECUTION.
©2022, The Martin Architectural Group, P.C.




**THE MARTIN ARCHITECTURAL GROUP, P.C.**
**ARCHITECTS AND LAND PLANNERS**
A PROFESSIONAL CORPORATION
240 NORTH 22ND STREET, PHILADELPHIA, PA, 19103
P (215) 665-1600 F (215) 561-5064

| | |
|---|---|
| P.A.: | DREW ROMANIC |
| P.M.: | JASON DECAMPLI |
| DRAWN BY: | Author |
| PROJECT NO: | 1362-12 |

| NO. | REVISION | DATE |
|---|---|---|
| 1 | PERMIT SET | 12/20/22 |

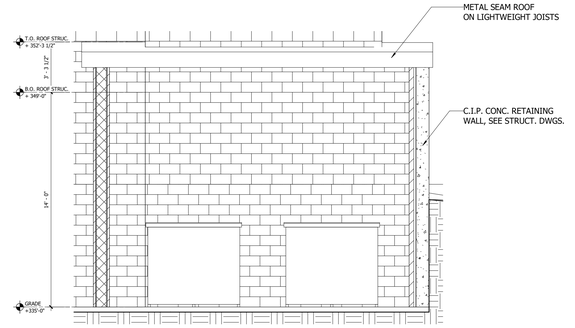


## 2 DUMPSTER ENCLOSURE - ELEVATION
SCALE : 1/4" = 1'-0"

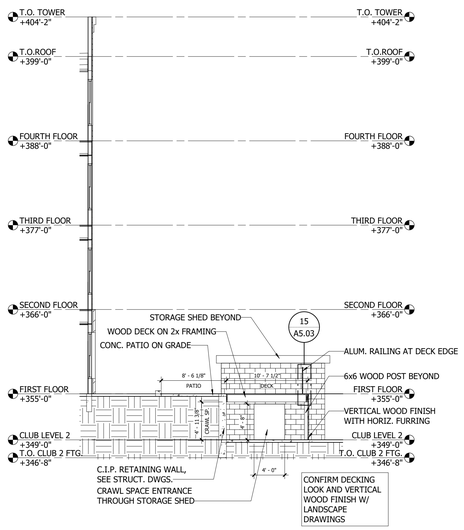


## 5 SECTION @ UNDER DECK STORAGE
SCALE : 1/8" = 1'-0"

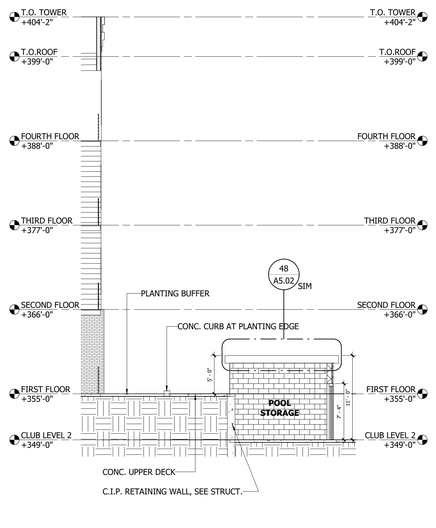


## 4 SECTION @ POOL STORAGE SHED
SCALE : 1/8" = 1'-0"

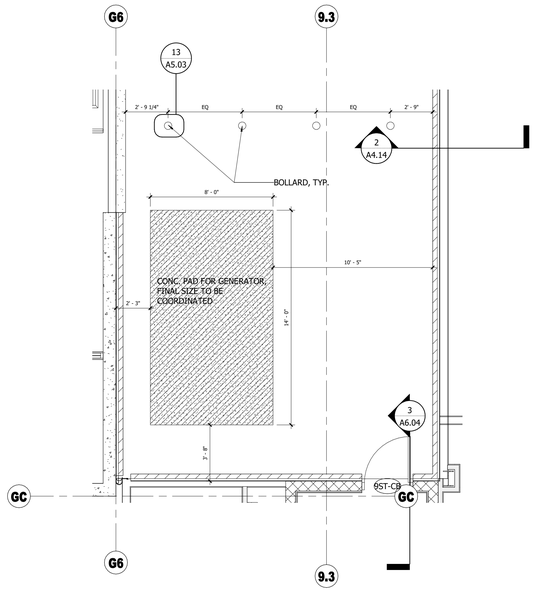


## 3 SERVICE ALLEY - ENLARGED
SCALE : 1/4" = 1'-0"

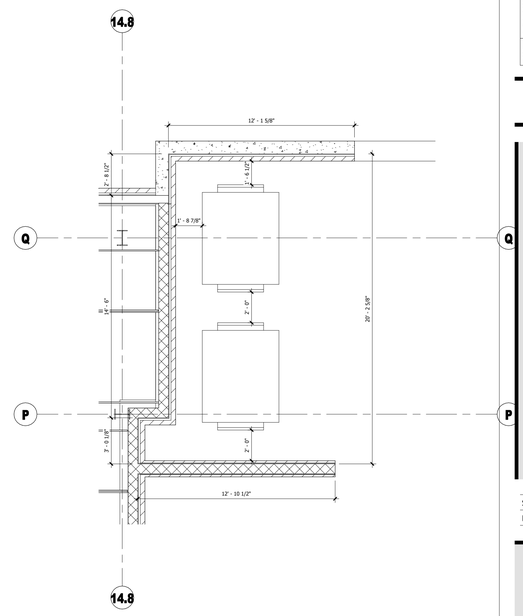


## 1 DUMPSTER ENCLOSURE - ENLARGED
SCALE : 1/4" = 1'-0"

ENLARGED SITE AREAS
**Granite Run Apartment 02**
MIDDLETOWN TOWNSHIP, PA

SCALE:
DATE: 12/20/22

**A6.10**

©2022, The Martin Architectural Group, P.C.

Printed: 1/13/2023 4:53:07 PM

# EXTERIOR PARTITION TYPES

## BEARING WALL — (1) HOUR FIRE RATED

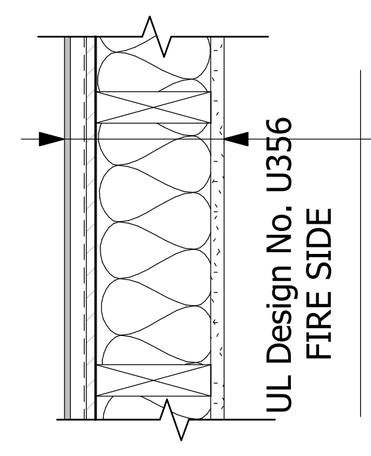


ONE-HOUR RATED EXTERIOR WALL CONSTRUCTION
WITH CEMENTITIOUS SIDING
- CEMENTITIOUS LAP SIDING
- WATER RESISTANT VAPOR PERMEABLE BARRIER
-7/16" ZIP SYSTEM EXT. SHEATHING W/INTEGRAL WEATHER BARRIER
-2X6 WOOD STUDS PER PLAN
-R-21 BATT INSULATION
-(1) LAYER OF 5/8" TYPE "X" G.W.B.

A — TYP. 1-HR RATED EXT. WALL W/ CEMENTITIOUS LAP SIDING
-ADDITIONAL DENSGLASS WALLBOARD @ TUB WALLS ABOVE TUB FLANGE PER SPECIFICATIONS
-SUBSTITUTE M.R.G.W.B AT WET WALLS

A

## BEARING WALL — (1) HOUR FIRE RATED

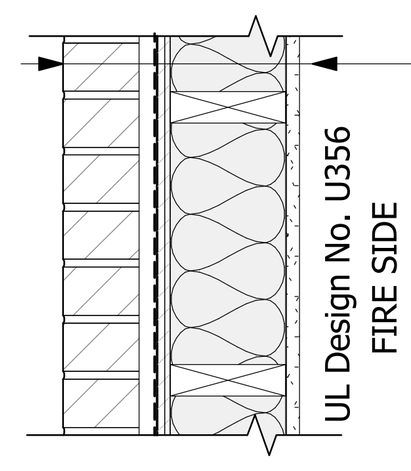


ONE-HOUR RATED EXTERIOR WALL CONSTRUCTION
WITH 4" BRICK
- 4" BRICK WITH WALL TIES
(16" O.C. VERTICAL ADJUSTABLE & 24" O.C. HORIZONTAL TIES)
- 1" AIR SPACE (TYPICAL)
- 7/16" ZIP SYSTEM EXT. SHEATHING W/INTEGRAL WEATHER BARRIER
- 2X6 FRT STUD PER PLAN
- R-21 BATT INSULATION
-(1) LAYERS OF 5/8" TYPE "X" G.W.B.

B — TYP. 1-HR RATED EXT. WALL W/ 4" BRICK
- ADDITIONAL DESGLASS CEMENT WALLBOARD @ TUB WALLS ABOVE TUB FLANGE PER SPECIFICATIONS
- SUBSTITUTE M.R.G.W.B AT WET WALLS

B

## BEARING WALL — (1) HOUR FIRE RATED

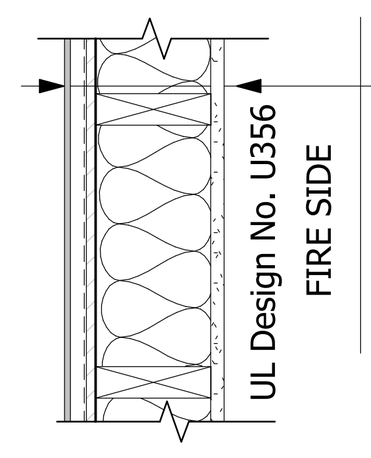


ONE-HOUR RATED EXTERIOR WALL CONSTRUCTION
WITH WOOD PANEL
- WOOD PANEL
- 3/4" MIN FURRING PER MFG'S REQ.
- WATER RESISTANT VAPOR PERMEABLE BARRIER
- 7/16" ZIP SYSTEM EXT. SHEATHING W/INTEGRAL WEATHER BARRIER
- 2X6 WOOD STUDS PER PLAN
- R-21 BATT INSULATION
- (1) LAYER OF 5/8" TYPE "X" G.W.B.

C — TYP. 1-HR RATED EXT. WALL W/ WOOD PANEL
-ADDITIONAL DENSGLASS WALLBOARD @ TUB WALLS ABOVE TUB FLANGE PER SPECIFICATIONS
-SUBSTITUTE M.R.G.W.B AT WET WALLS

C2 — EXT. WALL W/ WOOD PANEL - METAL STUD
- SUBSTITUTE WD FRAMING W/ EQUIVALENT DIM. METAL FRAMING
- ADDITIONAL 1.5" RIGID INSULATION OUTSIDE OF SHTHG, REMOVE BATT

C

## BEARING WALL — (1) HOUR FIRE RATED

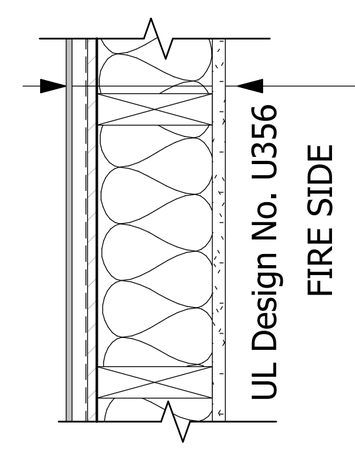


ONE-HOUR RATED EXTERIOR WALL CONSTRUCTION
WITH CEMENTITIOUS PANEL
- CEMENTITIOUS PANEL
- 3/4" MIN FURRING PER MFG'S REQ.
- WATER RESISTANT VAPOR PERMEABLE BARRIER
- 7/16" ZIP SYSTEM EXT. SHEATHING W/INTEGRAL WEATHER BARRIER
- 2X6 WOOD STUDS PER PLAN
- R-21 BATT INSULATION
- (1) LAYER OF 5/8" TYPE "X" G.W.B.

D — TYP. 1-HR RATED EXT. WALL W/ CEMENTITIOUS PANEL
-ADDITIONAL DENSGLASS WALLBOARD @ TUB WALLS ABOVE TUB FLANGE PER SPECIFICATIONS
-SUBSTITUTE M.R.G.W.B AT WET WALLS

D

## BEARING WALL — (1) HOUR FIRE RATED

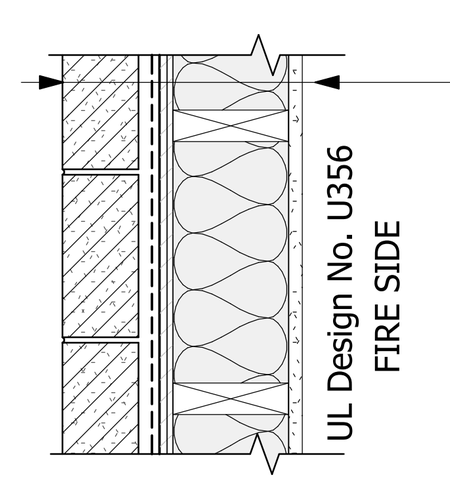


ONE-HOUR RATED EXTERIOR WALL CONSTRUCTION
WITH ARCHITECTURAL BLOCK VENEER
- FIZZANO ARCHITECTURAL BLOCK
- 1" AIR GAP
- WATER RESISTANT VAPOR PERMEABLE BARRIER
- 7/16" ZIP SYSTEM EXT. SHEATHING W/INTEGRAL WEATHER BARRIER
- 2X6 FRT STUD PER PLAN
- R-21 BATT INSULATION
-(1) LAYERS OF 5/8" TYPE "X" G.W.B.

E — TYP. 1-HR RATED EXT. WALL W/ LARGE BRICK VENEER
- ADDITIONAL DESGLASS CEMENT WALLBOARD @ TUB WALLS ABOVE TUB FLANGE PER SPECIFICATIONS
- SUBSTITUTE M.R.G.W.B AT WET WALLS

E2 — EXT. WALL W/ LARGE BRICK VENEER - METAL STUD
- SUBSTITUTE WD FRAMING W/ EQUIVALENT DIM. METAL FRAMING
- ADDITIONAL 1.5" RIGID INSULATION OUTSIDE OF SHTHG, REMOVE BATT

E

## BEARING WALL — (1) HOUR FIRE RATED

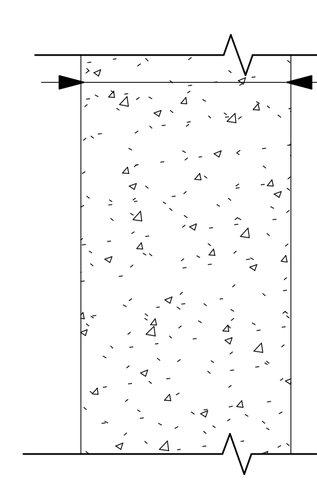

ONE-HOUR RATED EXTERIOR PRECAST PANEL
- 10" PRECAST PLANK BY OTHERS

F — TYP. 1-HR RATED EXT. PRECAST PANEL
- 10" PRECAST PLANK BY OTHERS

F

## BEARING WALL — (2) HOUR FIRE RATED

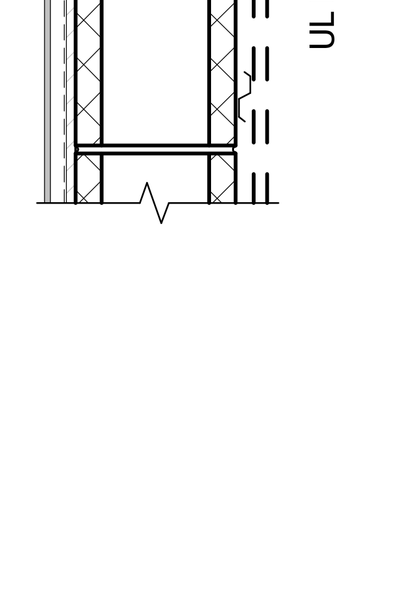


TWO-HOUR RATED EXTERIOR WALL CONSTRUCTION
WITH CEMENTITIOUS SIDING
- CEMENTITIOUS LAP SIDING
- WATER RESISTANT VAPOR PERMEABLE BARRIER
-7/16" ZIP SYSTEM EXT. SHEATHING W/INTEGRAL WEATHER BARRIER
-7 5/8" CMU BLOCK PER PLAN
-RESILIENT CHANNELS AT 12" O.C. (OPTIONAL)
-(1) LAYER OF 5/8" TYPE "X" G.W.B. (OPTIONAL)

G — TYP. 2-HR RATED EXT. WALL W/ CEMENTITIOUS LAP SIDING
-

G

## BEARING WALL — (2) HOUR FIRE RATED

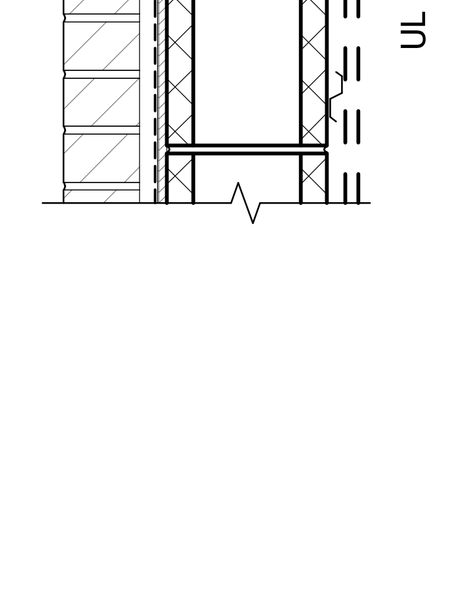


TWO-HOUR RATED EXTERIOR WALL CONSTRUCTION
WITH 4" BRICK
- 4" BRICK WITH WALL TIES
(16" O.C. VERTICAL ADJUSTABLE & 24" O.C. HORIZONTAL TIES)
- 1" AIR SPACE (TYPICAL)
-7/16" ZIP SYSTEM EXT. SHEATHING W/INTEGRAL WEATHER BARRIER
-7 5/8" CMU BLOCK PER PLAN
-RESILIENT CHANNELS AT 12" O.C. (OPTIONAL)
-(1) LAYER OF 5/8" TYPE "X" G.W.B. (OPTIONAL)

H — TYP. 2-HR RATED EXT. WALL W/ 4" BRICK
-

H

## BEARING WALL — (2) HOUR FIRE RATED

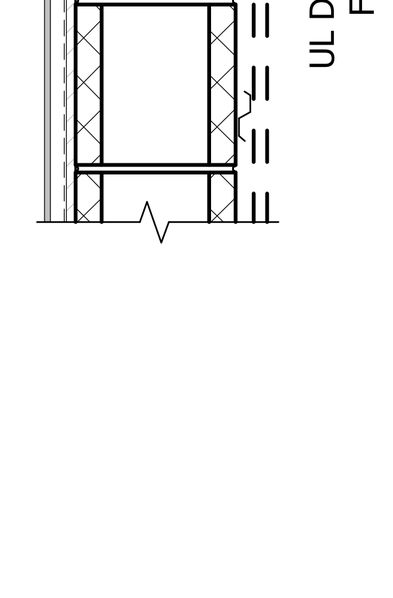


TWO-HOUR RATED EXTERIOR WALL CONSTRUCTION
WITH CEMENTITIOUS PANEL
- CEMENTITIOUS PANEL
- 3/4" MIN FURRING PER MFG'S REQ.
- WATER RESISTANT VAPOR PERMEABLE BARRIER
-7/16" ZIP SYSTEM EXT. SHEATHING W/INTEGRAL WEATHER BARRIER
-7 5/8" CMU BLOCK PER PLAN
-RESILIENT CHANNELS AT 12" O.C. (OPTIONAL)
-(1) LAYER OF 5/8" TYPE "X" G.W.B. (OPTIONAL)

I — TYP. 2-HR RATED EXT. WALL W/ CEMENTITIOUS PANEL
-

I

## BEARING WALL — (2) HOUR FIRE RATED

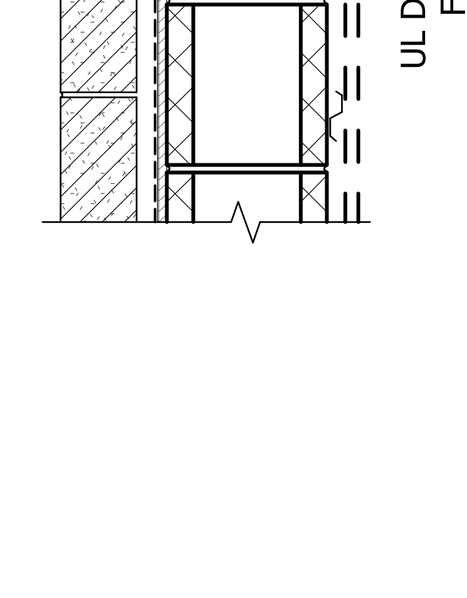


TWO-HOUR RATED EXTERIOR WALL CONSTRUCTION
WITH ARCHITECTURAL BLOCK VENEER
- 4" FIZZANO ARCHITECTURAL BLOCK WITH WALL TIES
(16" O.C. VERTICAL ADJUSTABLE & 24" O.C. HORIZONTAL TIES)
- 1" AIR SPACE (TYPICAL)
-7/16" ZIP SYSTEM EXT. SHEATHING W/INTEGRAL WEATHER BARRIER
-7 5/8" CMU BLOCK PER PLAN
-RESILIENT CHANNELS AT 12" O.C. (OPTIONAL)
-(1) LAYER OF 5/8" TYPE "X" G.W.B. (OPTIONAL)

J — TYP. 2-HR RATED EXT. WALL W/ 4" ARCHITECTURAL BLOCK
-

J

# INTERIOR PARTITION TYPES

## BEARING WALL — (1) HOUR FIRE RATED

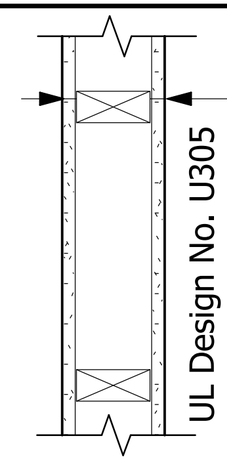


- 5/8" TYPE "X" GYPSUM WALL BOARD
- 2x4 OR 2x6 STUDS PER PLANS, SPACED 16" O.C. MAX
- 5/8" TYPE "X" GYPSUM WALL BOARD

1 — TYPICAL INTERIOR PARTITION WALL (1) HOUR RATED

1A — TYPICAL INTERIOR PARTITION WALL (1) HOUR RATED
ADDITIONAL 5/8" DENS SHIELD WALLBOARD @ SHOWER OR @ TUB WALLS ABOVE TUB FLANGE PER SPECIFICATIONS AND 20/A5.07

1B — TYPICAL INTERIOR PARTITION WALL (1) HOUR RATED
SUBSTITUTE M.R.G.W.B AT WET WALLS

1C — TYPICAL INTERIOR PARTITION WALL (1) HOUR RATED
W/ GLASS FIBER BATT FILL CAVITY

1D — TYPICAL INTERIOR PARTITION WALL (1) HOUR RATED
G.W.B ONE SIDE ONLY

1

## NON-BEARING WALL — NON-FIRE RATED

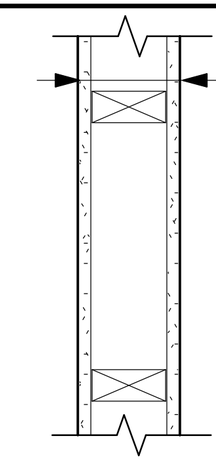

- 5/8" TYPE "X" G.W.B
- 2x4 OR 2x6 STUDS PER STRUCTURAL PLANS
(- 4" or 6" METAL STUD AT AMENITY ONLY)
- 5/8" TYPE "X" G.W.B

2 — TYPICAL INTERIOR PARTITION WALL - NON RATED

2A — INTERIOR PARTITION WALL - NON RATED
SUBSTITUTE 5/8" DENS SHIELD @ SHOWER OR @ TUB WALLS ABOVE TUB FLANGE

2B — INTERIOR PARTITION WALL - NON RATED
SUBSTITUTE M.R. G.W.B AT WET WALLS

2C — INTERIOR PARTITION WALL - NON RATED
W/ GLASS FIBER BATT FILL CAVITY

2D — TYPICAL INTERIOR PARTITION WALL (1) HOUR RATED
G.W.B ONE SIDE ONLY

2

## BEARING WALL — (1) HOUR FIRE RATED

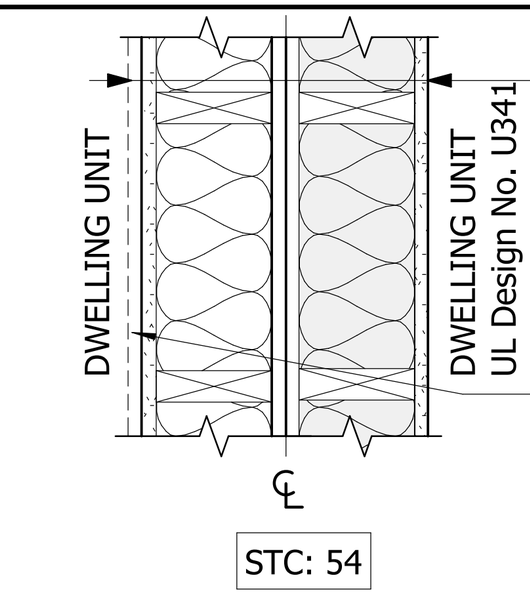


- 5/8" TYPE "X" GYPSUM WALL BOARD
- 2x6 STUDS PER STRUCTURAL PLANS
- R-11 UNFACED BATT INSULATION
- 1" AIR SPACE
- 2x6 STUDS PER STRUCTURAL PLANS
- R-11 BATT INSULATION
- 5/8" TYPE "X" GYPSUM WALL BOARD

ADD ONE LAYER OF GWB WHERE TWO BEDROOMS ARE ADJACENT

SEE DETAILS FOR OUTLET BOX & FIREBLOCKING REQUIREMENTS DRAFTSTOP CAVITY EVERY 10'-0" MAX. W/MINERAL WOOL OR OTHER MEANS ALLOWED BY CODE.

3 — TYPICAL UNIT SEPARATION WALL (1) HOUR RATED

3A — UNIT SEPARATION WALL (1) HOUR RATED
ADDITIONAL DENS SHIELD WALLBOARD LAYER @ TUB WALLS ABOVE TUB FLANGE

3B — UNIT SEPARATION WALL (1) HOUR RATED
W/ 5/8" TYPE "X" M.R.G.W.B AT PLUMBING FIXTURES

3C — UNIT SEPARATION WALL BETWEEN TWO BEDROOMS
NOTE: WHERE TWO BEDROOMS ARE ADJACENT, PROVIDE AN ADDITIONAL LAYER OF 5/8" TYPE "X" GWB ON ONE SIDE ONLY

3

## BEARING WALL — (2) HOUR FIRE RATED

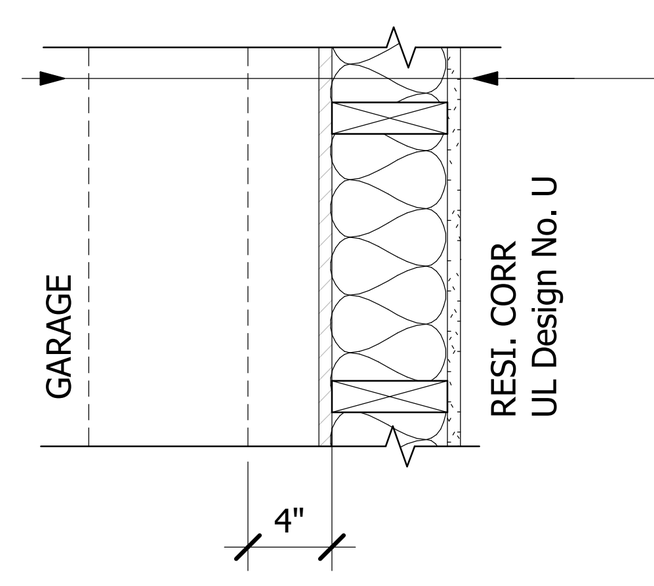


(2) HOUR RATED RESI/GARAGE SEPARATION WALL
- (1) LAYERS OF 5/8" G.W.B.
- 2X6 STUD PER PLAN W/ MINERAL WOOL INSULATION (R=21)
- 1/2" DENSGLASS SHEATHING W/ INTEGRAL WEATHER BARRIER
- AIR SPACE
- PRECAST CONCRETE WALL (SEE PRECAST MANUF.)

4 — TYP. RESIDENTIAL/GARAGE SEPARATION WALL

4

## BEARING WALL — (1) HOUR FIRE RATED

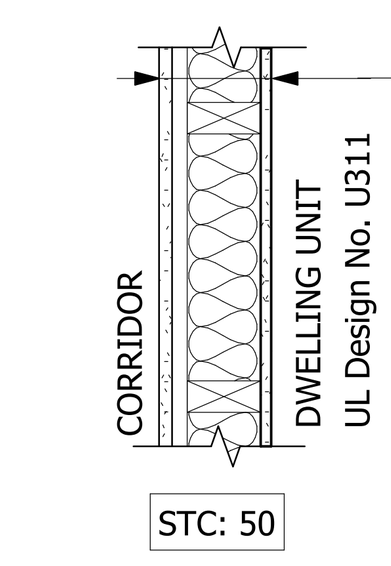


(1) HOUR RATED UNIT SEPARATION WALL @ CORRIDOR
- ONE LAYER OF 5/8" TYPE "X" GYPSUM WALL BOARD
- RC-1 RESILIENT CHANNELS (CORRIDOR SIDE)
- 2x4 OR 2x6 STUDS PER STRUCTURAL PLANS
- R-11 BATT INSULATION
- 5/8" TYPE "X" GYPSUM WALL BOARD

5 — UNIT/CORRIDOR SEPARATION WALL

5A — UNIT/CORRIDOR SEPARATION WALL
PROVIDE 5/8" TYPE "X" DENS SHIELD ON TUB OR SHOWER SIDE OF WALL OVER BARE LAYER BEHIND TUB OR SHOWER

5B — UNIT/CORRIDOR SEPARATION WALL
SUBSTITUTE M.R.G.W.B AT WET WALLS

5

## BEARING WALL — (2) HOUR FIRE RATED

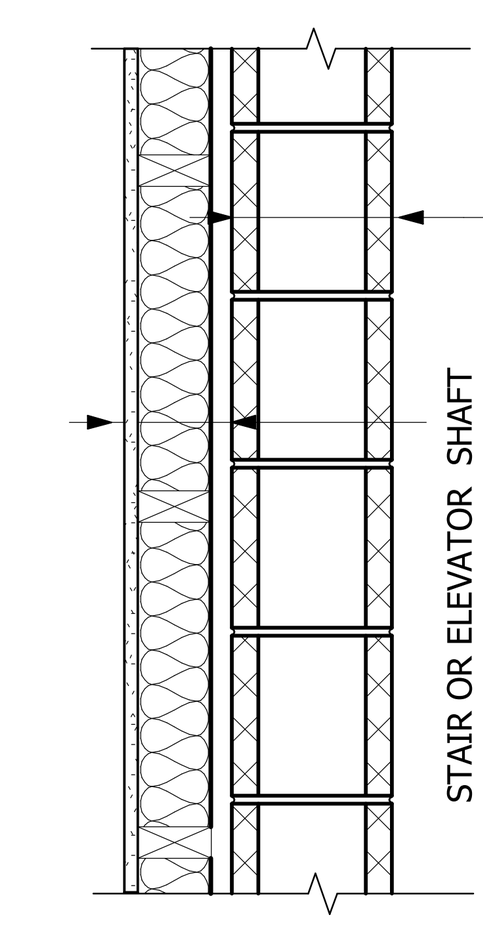


- 2 HOUR RATE CMU OR CONCRETE WALL - SEE STRUCTURAL DWG
- INT. CMU PAINTED @ STAIRS

- (1) LAYER OF 5/8" TYPE "X" GYPSUM WALL BOARD
- 2x4 OR 2x6 STUDS PER PLANS
- R11 BATT INSULATION OR SOUND ATTENUATION BLANKETS
- 1" AIR SPACE - SEE PLANS

6 — (2) HOUR RATED STAIR/UNIT WALL

6A — (2) HOUR RATED STAIR/UNIT WALL
ADDITIONAL FIBER CEMENT WALLBOARD @ TUB WALLS ABOVE TUB FLANGE PER SPECIFICATIONS AND 20/A5.07

6B — (2) HOUR RATED STAIR/UNIT WALL
SUBSTITUTE M.R.G.W.B AT WET WALLS

6C — (2) HOUR RATED STAIR/UNIT WALL
OMIT SOUND ATTENUATION BATT

6

## (2) HOUR FIRE RATED

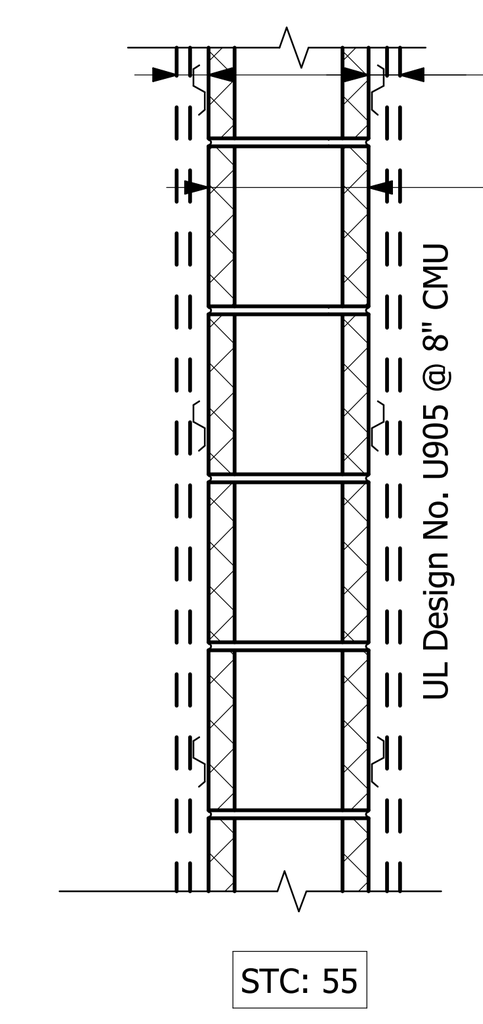


OPTIONAL INTERIOR FINISH
- 5/8" GYPSUM WALL BOARD
- RESILIENT CHANNELS @ 12" O.C

- 2 HOUR RATED 8" CMU WALL - SEE STRUCTURAL DWG
- INT. CMU PAINTED

7 — (2) HOUR RATED CMU

7A — (2) HOUR RATED CMU
FINISH ON ONE SIDE OF CMU WALL
SUBSTITUTE M.R.G.W.B AT WET WALLS

7B — (2) HOUR RATED CMU
FINISH ON BOTH SIDE OF CMU WALL
SUBSTITUTE M.R.G.W.B AT WET WALLS

7C — (2) HOUR RATED CONCRETE WALL

7D — (2) HOUR RATED CONCRETE
FINISH ON ONE SIDE OF CONCRETE WALL
SUBSTITUTE M.R.G.W.B AT WET WALLS

7E — (2) HOUR RATED CONCRETE
FINISH ON BOTH SIDE OF CONCRETE WALL
SUBSTITUTE M.R.G.W.B AT WET WALLS

7

## (2) HOUR FIRE RATED

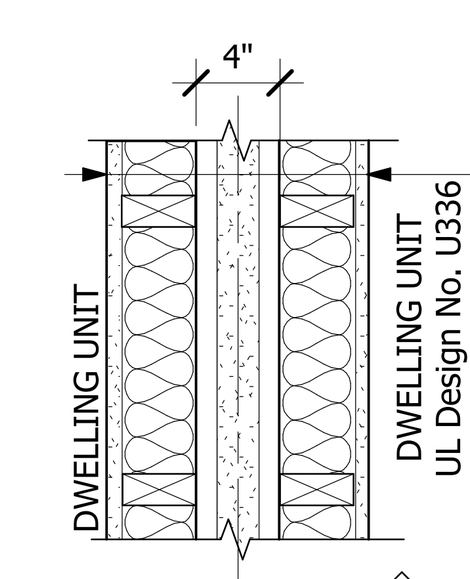


TYPICAL (2) HOUR FIRE WALL
EXPOSED TO FIRE FROM BOTH SIDES
per UL Design No. U336
- 5/8" TYPE "X" G.W.B
- 2x STUDS PER PLANS
- BATT INSULATION, R-13 @ 2X4 WALL, R19 @ 2X6 WALL
- 1" AIR SPACE (3/4" MIN)
- (2) 1" GYPSUM LINER PANELS
- 1-1/2" AIR SPACE (3/4" MIN)
- BATT INSULATION, R-13 @ 2X4 WALL, R19 @ 2X6 WALL
- 5/8" TYPE "X" G.W.B
SEE DETAIL: 48/A5.04

8 — TYPICAL (2) HOUR FIRE WALL

8A — TYPICAL (2) HOUR FIRE WALL
ADDITIONAL FIBER CEMENT WALLBOARD @ TUB WALLS ABOVE TUB FLANGE PER SPECIFICATIONS AND 20/A5.07

8B — TYPICAL (2) HOUR FIRE WALL
SUBSTITUTE M.R.G.W.B AT WET WALLS

8C — TYPICAL (2) HOUR FIRE WALL
OMIT SOUND ATTENUATION BATT

8D — TYPICAL (2) HOUR FIRE WALL
G.W.B ONE SIDE ONLY

8

## NON-BEARING WALL — (2) HOUR FIRE RATED

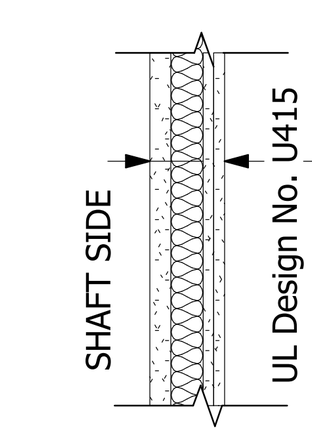


TYP. (2) HR. RATED CHASE PARTITION
- IN ACCORDANCE w/ U.L. DESIGN NO. U415
- (1) LAYER OF 1" THK DENS-GLASS ULTRA SHAFTGUARD
- 2 1/2" C-H STEEL STUDS @ 16" O.C.
- 1 1/2" GLASS BATT INSULATION
- (2) LAYER 5/8" TYPE "X" GWB

9 — (2) HOUR RATED FIRE SHAFTWALL PARTITION

9

## BEARING WALL — (2) HOUR FIRE RATED

STC: 61

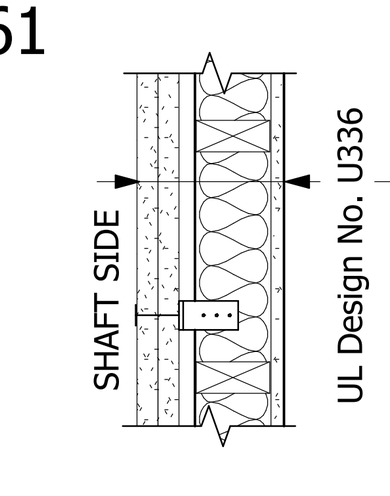


TYP. (2) HR. RATED CHASE PARTITION
- IN ACCORDANCE w/ U.L. DESIGN NO. U336
- (2) LAYERS OF 1" THK DENS-GLASS ULTRA SHAFTGUARD
- "H" SHAPED STEEL STUDS
- 3/4" AIRSPACE
- 2x4 OR 2x6 STUDS PER PLANS, 16" OR 24" MAX
- R11 BATT INSULATION OR SOUND ATTENUATION BLANKETS
- (1) LAYER 5/8" TYPE "X" GWB

10 — TYPICAL (2) HOUR RATED INTERIOR CHASE PARTITION

10A — TYPICAL (2) HOUR RATED INTERIOR CHASE PARTITION
ADDITIONAL FIBER CEMENT WALLBOARD @ TUB WALLS ABOVE TUB FLANGE PER SPECIFICATIONS AND 20/A5.07

10B — TYPICAL (2) HOUR RATED INTERIOR CHASE PARTITION
SUBSTITUTE M.R.G.W.B AT WET WALLS

10

## BEARING WALL — (2)HOUR FIRE RATED

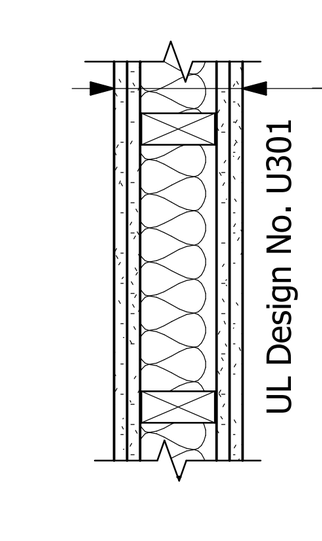


(2) HOUR RATED EMR WALL
- (2) LAYERS OF 5/8" TYPE "X" GWB
- 2X6 STUDS PER PLANS
- R-11 BATT INSULATION
- (2) LAYERS OF 5/8" TYPE "X" GYPSUM WALL BOARD

11 — TYPICAL (2) HOUR RATED WALL

11A — TYPICAL (2) HOUR RATED WALL
ADDITIONAL FIBER CEMENT WALLBOARD @ TUB WALLS ABOVE TUB FLANGE PER SPECIFICATIONS AND 20/A5.07

11B — TYPICAL (2) HOUR RATED WALL
SUBSTITUTE M.R.G.W.B AT WET WALLS

11C — TYPICAL (2) HOUR RATED WALL
OMIT SOUND ATTENUATION BATT

11

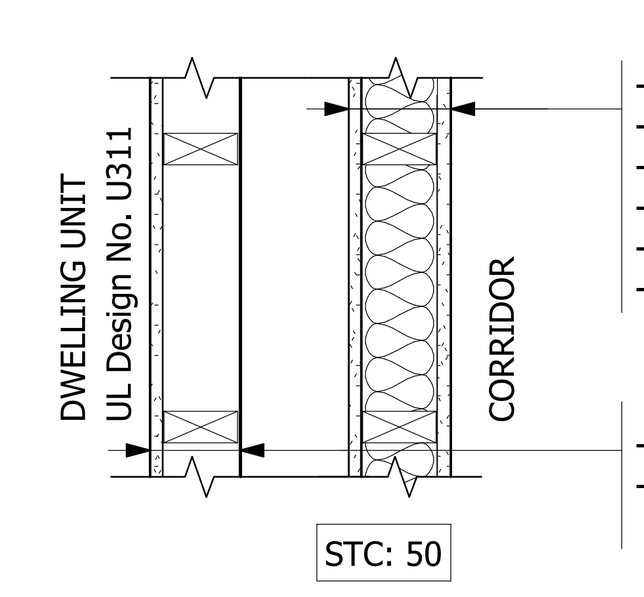


- ONE LAYER OF 5/8" TYPE "X" GYPSUM WALL BOARD
- RC-1 RESILIENT CHANNELS (CORRIDOR SIDE)
- 2x4 OR 2x6 STUDS PER STRUCTURAL PLANS
- R-11 BATT INSULATION
- 5/8" TYPE "X" GYPSUM WALL BOARD
- 5 1/8" AIR SPACE

- 2x4 STUDS @ 16" O.C. PER STRUCTURAL PLANS
- 5/8" TYPE "X" GYPSUM WALL BOARD

12 — 2x4 @ 16" O.C.
5/8" TYPE "X" G.W.B.

12

## NON-BEARING WALL — (2) HOUR FIRE RATED

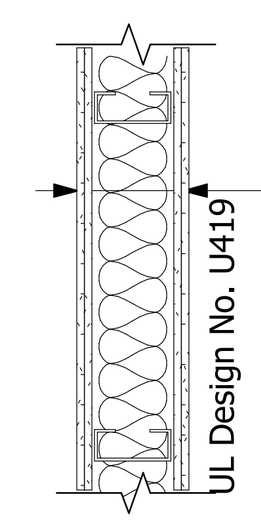


- (2) LAYERS OF 5/8" TYPE "X" GWB
- METAL STUDS (SEE STRUCT. DWGS FOR GAUGE AND SPACING) (SEE PLAN FOR SIZE)
- R11 BATT INSULATION
- (2) LAYERS OF 5/8" TYPE "X" GWB

13 — METAL STUD INTERIOR WALL - (2) HOUR RATED

13

## NON-BEARING WALL — NON-FIRE RATED

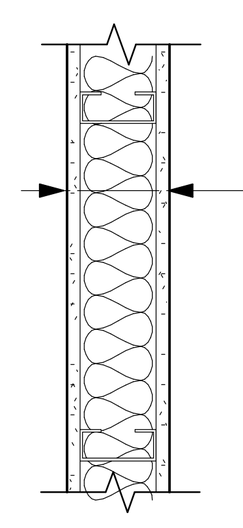

- 5/8" TYPE "X" GWB
- METAL STUDS (SEE STRUCT. DWGS FOR GAUGE AND SPACING) (SEE PLAN FOR SIZE)
- R11 BATT INSULATION
- 5/8" TYPE "X" GWB

14 — METAL STUD INTERIOR PARTITION WALL - NON RATED

14A — METAL STUD INTERIOR PARTITION WALL - NON RATED
ADDITIONAL FIBER CEMENT WALLBOARD @ TUB WALLS ABOVE TUB FLANGE PER SPECIFICATIONS AND 20/A5.07

14B — METAL STUD INTERIOR PARTITION WALL - NON RATED
SUBSTITUTE M.R.G.W.B AT WET WALLS

14C — METAL STUD INTERIOR PARTITION WALL - NON RATED
OMIT SOUND ATTENUATION BATT

14D — METAL STUD INTERIOR PARTITION WALL - NON RATED
G.W.B ONE SIDE ONLY

14

ALL REPORTS, PLANS, SPECIFICATIONS AND COMPUTER FILES RELATING TO THIS PROJECT ARE THE PROPERTY OF THE MARTIN ARCHITECTURAL GROUP. THE MARTIN ARCHITECTURAL GROUP RETAINS ALL COMMON LAW, STATUTE AND OTHER RESERVED RIGHTS INCLUDING THE COPYRIGHT THERETO. REPRODUCTION OF THE MATERIAL HEREIN OR SUBSTANTIAL USE WITHOUT WRITTEN PERMISSION OF THE MARTIN ARCHITECTURAL GROUP VIOLATES THE COPYRIGHT LAWS OF THE UNITED STATES AND WILL BE SUBJECT TO LEGAL PROSECUTION.
©2022, The Martin Architectural Group, P.C.

NIC

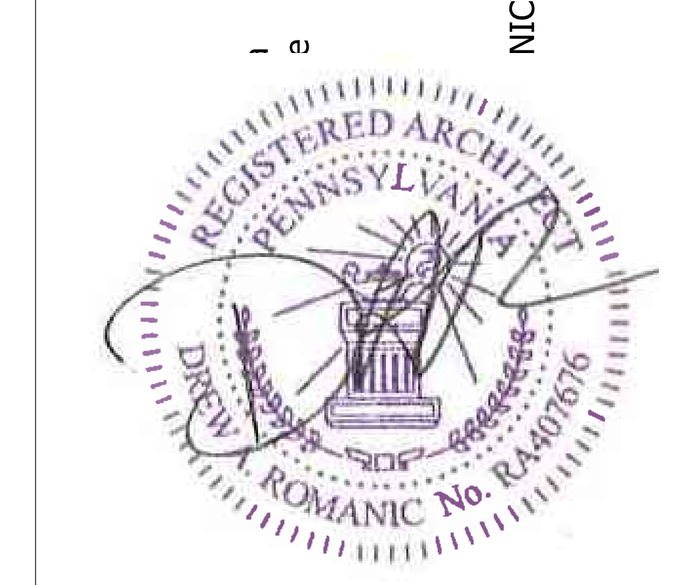


Professi
I hereby prepare duly lice laws of
Professi License Expiratic

THE MARTIN ARCHITECTURAL GROUP, P.C.
ARCHITECTS AND LAND PLANNERS
A PROFESSIONAL CORPORATION
240 NORTH 22ND STREET, PHILADELPHIA, PA, 19103
P (215) 665-1080 F (215) 561-5064

| | |
|---|---|
| P.A.: | DREW ROMANIC |
| P.M.: | JASON DECAMPLI |
| DRAWN BY: | MAG |
| PROJECT NO: | 1362-12 |

| NO. | REVISION | DATE |
|---|---|---|
| 1 | PERMIT SET | 12/20/22 |

# PARTITION SCHEDULES
**Granite Run Apartment 02**
MIDDLETOWN TOWNSHIP, PA

| | |
|---|---|
| SCALE: | AS NOTED |
| DATE: | 12/31/2017 |

**A7.01**

©2022, The Martin Architectural Group, P.C.

| | | | | | | | | | | | |
|---|---|---|---|---|---|---|---|---|---|---|---|
| 27 | 05 | 2'-10" | 6'-8" | 1 3/4" | | | | | | | EXIT. MECH DOOR |
| 38 | 10 | 1'-6" | 6'-8" | 1 3/8" | WD | | | | | | |
| 39 | 04 | 2'-10" | 6'-8" | 1 3/8" | MTE | | | | | | |
| 40 | 04 | 2'-10" | 6'-8" | 1 3/8" | MTE | | | | | | |
| 41 | 04 | 2'-10" | 6'-8" | 1 3/8" | MTE | | | | | | |
| 42 | 04 | 2'-10" | 6'-8" | 1 3/8" | MTE | | | | | | |
| 43 | 04 | 2'-10" | 6'-8" | 1 3/8" | MTE | | | | | | |
| 44 | 13 | 5'-0" | 6'-8" | 1 3/8" | | | | | | | DOUBLE SWING DOOR |
| 45 | 14 | 5'-0" | 6'-8" | 1 3/4" | | | | | | | LOUVERED BI-FOLD |
| 46 | 02 | 3'-0" | 7'-0" | 1/2" | | | | | | | BALCONY DOOR |
| 47 | 04 | 2'-10" | 6'-8" | 1 3/8" | MTE | | | | | | |
| 48 | 04 | 2'-10" | 6'-8" | 1 3/8" | MTE | | | | | | |
| 49 | 04 | 2'-10" | 6'-8" | 1 3/8" | MTE | | | | | | |
| 51 | 04 | 2'-10" | 6'-8" | 1 3/8" | MTE | | | | | | |
| 52 | 05 | 2'-10" | 6'-8" | 1 3/4" | | | | | | | EXIT. MECH DOOR |
| 53 | 11 | 1'-4" | 6'-8" | 1 3/8" | WD | | | | | | |
| 54 | 02 | 3'-0" | 7'-0" | 1/2" | | | | | | | BALCONY DOOR |
| 55 | 09 | 1'-6" | 6'-8" | 1 3/8" | HC | | | | | | LOUVERED AIR HANDLER |
| 155 | 10 | 1'-6" | 6'-8" | 1 3/8" | WD | | | | | | |
| 957 | 04 | 2'-10" | 6'-8" | 1 3/8" | MTE | | | | | | |
| 1484 | 12 | 4'-0" | 6'-8" | | | | | | | | SLIDING BARN DOOR |
| 1485 | 14 | 5'-0" | 6'-8" | 1 3/4" | | | | | | | LOUVERED BI-FOLD |
| 5296 | 08 | 2'-0" | 6'-8" | 1 3/8" | HC | | | | | | LOUVERED AIR HANDLER |
| R001A | BB | 6'-0" | 7'-11" | 1 3/4" | GL | AL | F2 | | RETAIL | | STOREFRONT |
| R001B | BB | 6'-0" | 7'-11" | 1 3/4" | GL | | | | RETAIL | | STOREFRONT |
| R001C | BB | 6'-0" | 7'-11" | 1 3/4" | GL | AL | F2 | | RETAIL | | STOREFRONT |
| R001D | BB | 5'-10" | 7'-9" | 1 3/4" | GL | AL | F2 | | RETAIL | | STOREFRONT |
| R001E | BB | 6'-8" | 7'-9" | 1 3/4" | GL | AL | F2 | | | | STOREFRONT |
| R001F | BB | 6'-10" | 7'-11" | 1 3/4" | GL | | | | | | STOREFRONT |
| R001G | BB | 6'-10" | 7'-11" | 1 3/4" | GL | | | | | | STOREFRONT |
| R001H | BB | 6'-10" | 7'-11" | 1 3/4" | GL | | | | | | STOREFRONT |
| R002A | AA | 6'-0" | 7'-0" | 1 3/4" | HM | HM | F2 | | CORR. | | |
| R002B | AA | 6'-0" | 7'-0" | 1 3/4" | HM | HM | F2 | | CORR. | | |
| R002C | AA | 6'-0" | 7'-0" | 1 3/4" | HM | HM | F2 | | CORR. | | |
| R002D | AA | 6'-0" | 7'-0" | 1 3/4" | HM | HM | F2 | | CORR. | | |
| R002E | AA | 6'-0" | 7'-0" | 1 3/4" | HM | | | | CORR. | | |
| R002F | AA | 6'-0" | 7'-0" | 1 3/4" | HM | | | | CORR. | | |
| R002G | AA | 6'-0" | 7'-0" | 1 3/4" | HM | | | | CORR. | | |
| R002H | AA | 6'-0" | 7'-0" | 1 3/4" | HM | | | | CORR. | | |
| R002I | AA | 6'-0" | 7'-0" | 1 3/4" | HM | HM | F2 | | CORR. | | |
| R003A | AA | 6'-0" | 7'-0" | 1 3/4" | HM | HM | F2 | | CORR. | | |
| R003B | AA | 6'-0" | 7'-0" | 1 3/4" | HM | HM | F2 | | CORR. | | |
| R004A | AA | 6'-0" | 7'-0" | 1 3/4" | HM | HM | F2 | | CORR. | | |
| R004B | A21 | 3'-0" | 7'-0" | 1 3/4" | GL | AL | F1 | | DOG WASH | | |
| R005A | AA | 6'-0" | 7'-0" | 1 3/4" | HM | HM | F2 | | CORR. | | |
| R005B | AA | 6'-0" | 7'-0" | 1 3/4" | HM | HM | F2 | | MAINTENANCE | | |
| R006A | AA | 6'-0" | 7'-0" | 1 3/4" | HM | HM | F2 | | CORR. | | |
| R006B | AA | 6'-0" | 7'-0" | 1 3/4" | HM | HM | F2 | | PACKAGE ROOM (PARTIALLY REFRIGERATED) | | |
| R007A | A | 3'-0" | 6'-8" | 1 3/4" | HM | HM | F1 | | TRASH | | |
| R007B | A | 3'-0" | 7'-0" | 1 3/4" | HM | HM | F1 | 90 min | | | |
| R007C | C | 8'-0" | 8'-0" | | | | | | | | OVERHEAD DOOR |
| R008A | AA | 6'-0" | 7'-0" | 1 3/4" | HM | HM | F2 | | CORR. | | |
| R008B | AA | 6'-0" | 7'-0" | 1 3/4" | HM | HM | F2 | | MOVE IN/ OUT | | |
| R009A | A | 3'-0" | 7'-0" | 1 3/4" | HM | HM | F1 | 90 min | UTILITY RM. | | |
| R009B | AA | 6'-0" | 7'-0" | 1 3/4" | HM | HM | F2 | | UTILITY RM. | | |
| R009C | AA | 6'-0" | 7'-0" | 1 3/4" | HM | | | | UTILITY RM. | | |
| R010 | A | 3'-0" | 7'-0" | 1 3/4" | HM | AL | F1 | 90 min | INCOMING WATER | | |
| CLUB LEVEL 1 | | | | | | | | | | | |
| 2T-GA | A | 3'-0" | 7'-0" | 1 3/4" | HM | HM | F1 | 90 min | TRASH | 20 | |
| 2T-GB | C | 8'-0" | 8'-0" | | | | | | | 53 | OVERHEAD DOOR |
| 3ST-G | A | 3'-0" | 7'-0" | 1 3/4" | HM | HM | F1 | 90 min | STAIR 3 | 4 | |
| 4ST-G | A | 3'-0" | 7'-0" | 1 3/4" | HM | HM | F1 | 90 min | | 4 | |

| | | | | | | | | | | | |
|---|---|---|---|---|---|---|---|---|---|---|---|
| 2853 | A26 | 3'-0" | 7'-0" | 1" | | | | | RESIDENT STORAGE | | |
| 2859 | A26 | 3'-0" | 7'-0" | 1" | | | | | RESIDENT STORAGE | | |
| 2860 | A26 | 3'-0" | 7'-0" | 1" | | | | | RESIDENT STORAGE | | |
| 2861 | A26 | 3'-0" | 7'-0" | 1" | | | | | RESIDENT STORAGE | | |
| 2862 | A26 | 3'-0" | 7'-0" | 1" | | | | | RESIDENT STORAGE | | |
| 4180 | A26 | 3'-0" | 7'-0" | 1" | | | | | MENS | | |
| C101A | BB | 6'-0" | 7'-11" | 1 3/4" | GL | AL | F2 | | VESTIBULE | | STOREFRONT |
| C101B | BB | 6'-0" | 7'-9" | 1 3/4" | GL | AL | F2 | | CORR. | | STOREFRONT |
| C102 | BB | 6'-0" | 7'-9" | 1 3/4" | GL | AL | F2 | | CORR. | | STOREFRONT |
| C103 | B | 3'-0" | 7'-0" | 1 3/4" | MTE | AL | F1 | | ASST. MANAGER OFFICE | | FULL LITE |
| C104 | B | 3'-0" | 7'-0" | 1 3/4" | MTE | AL | F1 | | MANAGER'S OFFICE | | FULL LITE |
| C105 | A | 3'-0" | 7'-0" | 1 3/4" | MTE | AL | F1 | | BREAK RM. | | |
| C106 | B | 3'-0" | 7'-0" | 1 3/4" | MTE | AL | F1 | | COPY RM. | | FULL LITE |
| C107 | A | 3'-0" | 7'-0" | 1 3/4" | MTE | AL | F1 | | CORR. | | |
| C111 | BB | 6'-0" | 7'-0" | 1 3/8" | MTE | AL | F2 | | GAME LOUNGE | | FULL LITE |
| C112 | A | 2'-6" | 6'-8" | 1 3/4" | MTE | AL | F1 | | CORR. | | |
| C113 | A | 3'-0" | 7'-0" | 1 3/4" | MTE | AL | F1 | | AV/ SERVER | | |
| C114 | BB | 6'-0" | 7'-11" | 1 3/4" | GL | AL | F2 | | MAIL ROOM | | STOREFRONT |
| C115 | A | 3'-0" | 7'-0" | 1 3/4" | MTE | AL | F1 | | WOMENS | | |
| C116 | A | 3'-0" | 7'-0" | 1 3/4" | MTE | AL | F1 | | MENS | | |
| C117 | A | 3'-0" | 7'-0" | 1 3/4" | MTE | | | | JANITOR | | |
| C118 | B | 3'-0" | 7'-0" | 1 3/4" | GL | | | | PODCAST / RECORDING | | STOREFRONT |
| C119 | B | 3'-0" | 7'-0" | 1 3/4" | GL | | | | CORR. | | STOREFRONT |
| C120 | B | 3'-0" | 7'-0" | 1 3/4" | MTE | | | | OFFICE | | FULL LITE |
| C121 | B | 2'-10" | 7'-0" | 1 3/4" | GL | | | | CORR. | | STOREFRONT |
| C122 | B | 2'-10" | 7'-0" | 1 3/4" | GL | | | | CORR. | | STOREFRONT |
| C123 | B | 3'-0" | 7'-0" | 1 3/4" | MTE | AL | F1 | | CORR. | | FULL LITE |
| C124 | AA | 6'-0" | 7'-0" | 1 3/4" | HM | | | | RESIDENT STORAGE | | |
| C125 | A26 | 3'-0" | 7'-0" | 1" | | | | | MENS | | |
| C126 | A26 | 3'-0" | 7'-0" | 1" | | | | | | | |
| C127 | A26 | 3'-0" | 7'-0" | 1" | | | | | | | |
| C128 | A26 | 3'-0" | 7'-0" | 1" | | | | | | | |
| C1001 | BB | 6'-0" | 7'-9" | 1 3/4" | GL | AL | F2 | | Room | | STOREFRONT |
| C1002 | BB | 6'-0" | 7'-0" | 1 3/8" | MTE | AL | F2 | | CORR. | | FULL LITE |
| C1003 | BB | 6'-0" | 7'-0" | 1 3/8" | MTE | AL | F1 | | CORR. | | FULL LITE |
| GC01A | F | 6'-0" | 7'-0" | 1 3/8" | | AL | F2 | * | CORR. | 40 | *RATED GLASS |
| GC01B | BB | 6'-0" | 6'-11" | 1 3/4" | GL | AL | F2 | | | 37 | STOREFRONT |
| GC02B | B | 3'-0" | 6'-11" | 1 3/4" | GL | AL | F1 | | | 41 | STOREFRONT |
| GE0 | A | 3'-0" | 7'-0" | 1 3/4" | HM | HM | F1 | 90 min | ELEC | 8 | |
| CLUB LEVEL 2 | | | | | | | | | | | |
| 1ST-C2A | A | 3'-0" | 7'-0" | 1 3/4" | HM | HM | F1 | 90 min | STAIR 1 | | |
| 1ST-C2B | A | 3'-0" | 7'-0" | 1 3/4" | HM | HM | F1 | 90 min | STAIR 1 | | |
| 2ST-G | A | 3'-0" | 7'-0" | 1 3/4" | HM | HM | F1 | 90 min | | | |
| 2854 | A26 | 3'-0" | 7'-0" | 1" | | | | | WOMENS | | |
| 2855 | A26 | 3'-0" | 7'-0" | 1" | | | | | WOMENS | | |
| 2856 | A26 | 3'-0" | 7'-0" | 1" | | | | | WOMENS | | |
| 2857 | A26 | 3'-0" | 7'-0" | 1" | | | | | | | |
| 2858 | A26 | 3'-0" | 7'-0" | 1" | | | | | | | |
| C201A | BB | 6'-0" | 7'-11" | 1 3/4" | GL | AL | F2 | | CLUBROOM | | STOREFRONT |
| C201B | D | 8'-9 3/4" | 10'-9 5/8" | 2" | | | | | | | CROWN BIFOLD |
| C201C | D | 8'-9 3/4" | 10'-9 5/8" | 2" | | | | | | | CROWN BIFOLD |
| C202A | BB | 6'-0" | 7'-0" | 1 3/8" | MTE | AL | F2 | | FITNESS | | FULL LITE |
| C202B | BB | 6'-0" | 6'-10" | 1 3/4" | GL | | | | YOGA | | STOREFRONT |
| C203 | B | 3'-0" | 7'-0" | 1 3/4" | MTE | AL | F1 | | YOGA | | FULL LITE |
| C204 | A | 3'-0" | 7'-0" | 1 3/4" | MTE | AL | F1 | | MENS | | |
| C205 | A | 3'-0" | 7'-0" | 1 3/4" | MTE | AL | F1 | | WOMENS | | |

| | | | | | | | | | | | |
|---|---|---|---|---|---|---|---|---|---|---|---|
| 942 | 04 | 2'-10" | 6'-8" | 1 3/8" | MTE | | | | | | |
| 943 | 04 | 2'-10" | 6'-8" | 1 3/8" | MTE | | | | | | |
| 944 | 04 | 2'-10" | 6'-8" | 1 3/8" | MTE | | | | | | |
| 945 | 13 | 5'-0" | 6'-8" | 1 3/8" | | | | | | | DOUBLE SWING DOOR |
| 992 | 02 | 3'-0" | 7'-0" | 1/2" | | | | | | | BALCONY DOOR |
| 993 | 05 | 2'-10" | 6'-8" | 1 3/4" | | | | | | | UNIT EXT. MECH DOOR |
| 1002 | AA | 6'-0" | 8'-0" | 2" | HM | HM | F2 | 90 min | CORR. | | FIRE WALL |
| 1003 | AA | 6'-0" | 8'-0" | 2" | HM | HM | F2 | 90 min | STAIR 9 | | FIRE WALL |
| 1004 | AA | 6'-0" | 8'-0" | 2" | HM | HM | F2 | 90 min | CORR. | | FIRE WALL |
| 1005 | A | 3'-0" | 7'-0" | 1 3/4" | HM | HM | F1 | 90 min | CORR. | | |
| 1006 | AA | 6'-0" | 8'-0" | 2" | HM | HM | F2 | 90 min | CORR. | | FIRE WALL |
| 1039 | 04 | 2'-10" | 6'-8" | 1 3/8" | MTE | | | | | | |
| 1645 | 12 | 4'-0" | 6'-8" | | | | | | | | SLIDING BARN DOOR |
| 1646 | 10 | 1'-6" | 6'-8" | 1 3/8" | WD | | | | | | |
| 1647 | 14 | 5'-0" | 6'-8" | 1 3/4" | | | | | | | LOUVERED BI-FOLD |
| 1759 | 13 | 5'-0" | 6'-8" | 1 3/8" | | | | | | | DOUBLE SWING DOOR |
| 1769 | 13 | 5'-0" | 6'-8" | 1 3/8" | | | | | | | DOUBLE SWING DOOR |
| 2723 | 02 | 3'-0" | 7'-0" | 1/2" | | | | | | | BALCONY DOOR |
| 2800 | 05 | 2'-10" | 6'-8" | 1 3/4" | | | | | | | UNIT EXT. MECH DOOR |
| 2801 | 02 | 3'-0" | 7'-0" | 1/2" | | | | | | | BALCONY DOOR |
| 5336 | 08 | 2'-0" | 6'-8" | 1 3/8" | HC | | | | | | LOUVERED AIR HANDLER |
| C1210 | 05 | 2'-10" | 6'-8" | 1 3/4" | | | | | BALCONY | | UNIT EXT. MECH DOOR |
| C1222 | 02 | 3'-0" | 7'-0" | 1/2" | | | | | BALCONY | | BALCONY DOOR |
| C1232 | 02 | 3'-0" | 7'-0" | 1/2" | | | | | BALCONY | | BALCONY DOOR |
| C1242 | 02 | 3'-0" | 7'-0" | 1/2" | | | | | BALCONY | | BALCONY DOOR |
| C1250 | 05 | 2'-10" | 6'-8" | 1 3/4" | | | | | BALCONY | | UNIT EXT. MECH DOOR |
| C1262 | 02 | 3'-0" | 7'-0" | 1/2" | | | | | BALCONY | | BALCONY DOOR |
| C1270 | 05 | 2'-10" | 6'-8" | 1 3/4" | | | | | BALCONY | | UNIT EXT. MECH DOOR |
| C1323 | 05 | 2'-10" | 6'-8" | 1 3/4" | | | | | | | UNIT EXT. MECH DOOR |
| C1327 | AA | 6'-0" | 8'-0" | 2" | HM | HM | F2 | 90 min | CORR. | | FIRE WALL |
| G101A | EE | 6'-0" | 7'-0" | 1 3/8" | HM | AL | F2 | 90 min | CORR. | 40 | |
| G101B | BB | 6'-0" | 6'-11" | 1 3/4" | GL | AL | F2 | | | 37 | STOREFRONT |
| G102A | A | 3'-0" | 7'-0" | 1 3/4" | HM | HM | F1 | 90 min | VEST. | 42 | |
| G102B | B | 3'-0" | 6'-11" | 1 3/4" | GL | AL | F1 | | | 41 | STOREFRONT |
| SH1 | A | 3'-0" | 7'-0" | 1 3/4" | HM | | | 90 min | CORR. | | |
| SH2 | A | 3'-0" | 7'-0" | 1 3/4" | HM | | | 90 min | CORR. | | |
| SH3 | A | 3'-0" | 7'-0" | 1 3/4" | HM | | | 90 min | | | |
| SH4 | A | 3'-0" | 7'-0" | 1 3/4" | HM | | | 90 min | CORR. | | |
| SH5 | A | 3'-0" | 7'-0" | 1 3/4" | HM | | | 90 min | CORR. | | |
| SECOND FLOOR | | | | | | | | | | | |
| 1ST-2 | A | 3'-0" | 7'-0" | 1 3/4" | HM | HM | F1 | 90 min | STAIR 1 | | |
| 1T-2 | A | 3'-0" | 7'-0" | 1 3/4" | HM | HM | F1 | 90 min | TRASH | | |
| 2A | A | 3'-0" | 7'-0" | 1 3/4" | HM | HM | F1 | 90 min | M/E-2-A | | |
| 2B | A | 3'-0" | 7'-0" | 1 3/4" | HM | HM | F1 | 90 min | M/E-2-B | | |
| 2C | A | 3'-0" | 7'-0" | 1 3/4" | HM | HM | F1 | 90 min | M/E-2-C | | |
| 2D | A | 3'-0" | 7'-0" | 1 3/4" | HM | HM | F1 | 90 min | M/E-2-D | | |
| 2E | A | 3'-0" | 7'-0" | 1 3/4" | HM | HM | F1 | 90 min | CORR. | | |
| 2F | A | 3'-0" | 7'-0" | 1 3/4" | HM | HM | F1 | 90 min | M/E-2-F | | |
| 2ST-2 | A | 3'-0" | 7'-0" | 1 3/4" | HM | HM | F1 | 90 min | STAIR 2 | | |
| 2T-2 | A | 3'-0" | 7'-0" | 1 3/4" | HM | HM | F1 | 90 min | TRASH | 33 | |
| 3ST-2A | A | 3'-0" | 7'-0" | 1 3/4" | HM | HM | F1 | 90 min | CORR. | 6 | |
| 3ST-2B | A | 3'-0" | 7'-0" | 1 3/4" | HM | HM | F1 | 90 min | STAIR 3 | 6 | |
| 5ST-2 | A | 3'-0" | 7'-0" | 1 3/4" | HM | HM | F1 | 90 min | STAIR 5 | | |
| 6ST-2 | A | 3'-0" | 7'-0" | 1 3/4" | HM | HM | F1 | 90 min | CORR. | | |
| 7ST-2 | A | 3'-0" | 7'-0" | 1 3/4" | HM | HM | F1 | 90 min | CORR. | | |
| 170 | 05 | 2'-10" | 6'-8" | 1 3/4" | | | | | | | UNIT EXT. MECH DOOR |
| 182 | 02 | 3'-0" | 7'-0" | 1/2" | | | | | | | BALCONY DOOR |
| 1709 | 13 | 5'-0" | 6'-8" | 1 3/8" | | | | | | | DOUBLE SWING DOOR |
| 1729 | 13 | 5'-0" | 6'-8" | 1 3/8" | | | | | | | DOUBLE SWING DOOR |
| 1741 | 13 | 5'-0" | 6'-8" | 1 3/8" | | | | | | | DOUBLE SWING DOOR |
| 2002 | AA | 6'-0" | 8'-0" | 2" | HM | HM | F2 | 90 min | CORR. | | FIRE WALL |
| 2003 | AA | 6'-0" | 8'-0" | 2" | HM | HM | F2 | 90 min | CORR. | | FIRE WALL |
| 2004 | AA | 6'-0" | 8'-0" | 2" | HM | HM | F2 | 90 min | CORR. | | FIRE WALL |
| 2006 | AA | 6'-0" | 8'-0" | 2" | HM | HM | F2 | 90 min | CORR. | | FIRE WALL |
| 2745 | 02 | 3'-0" | 7'-0" | 1/2" | | | | | | | BALCONY DOOR |
| 2824 | 05 | 2'-10" | 6'-8" | 1 3/4" | | | | | BALCONY | | UNIT EXT. MECH DOOR |
| 2825 | 02 | 3'-0" | 7'-0" | 1/2" | | | | | | | BALCONY DOOR |
| C1090 | 05 | 2'-10" | 6'-8" | 1 3/4" | | | | | BALCONY | | UNIT EXT. MECH DOOR |
| C1102 | 02 | 3'-0" | 7'-0" | 1/2" | | | | | BALCONY | | BALCONY DOOR |
| C1112 | 02 | 3'-0" | 7'-0" | 1/2" | | | | | BALCONY | | BALCONY DOOR |
| C1120 | 05 | 2'-10" | 6'-8" | 1 3/4" | | | | | BALCONY | | UNIT EXT. MECH DOOR |
| C1130 | 05 | 2'-10" | 6'-8" | 1 3/4" | | | | | BALCONY | | UNIT EXT. MECH DOOR |
| C1142 | 02 | 3'-0" | 7'-0" | 1/2" | | | | | BALCONY | | BALCONY DOOR |
| C1290 | 05 | 2'-10" | 6'-8" | 1 3/4" | | | | | | | UNIT EXT. MECH DOOR |
| C1294 | AA | 6'-0" | 8'-0" | 2" | HM | HM | F2 | 90 min | CORR. | | FIRE WALL |
| G201A | EE | 6'-0" | 7'-0" | 1 3/8" | HM | HM | F2 | 90 min | VEST. | 40 | |
| G201B | BB | 6'-0" | 6'-11" | 1 3/4" | GL | AL | F2 | | | 37 | STOREFRONT |
| G202A | A | 3'-0" | 7'-0" | 1 3/4" | HM | HM | F1 | 90 min | VEST. | 42 | |
| G202B | B | 3'-0" | 6'-11" | 1 3/4" | GL | AL | F1 | | | 41 | STOREFRONT |
| THIRD FLOOR | | | | | | | | | | | |
| 1ST-3 | A | 3'-0" | 7'-0" | 1 3/4" | HM | HM | F1 | 90 min | STAIR 1 | | |
| 1T-3 | A | 3'-0" | 7'-0" | 1 3/4" | HM | HM | F1 | 90 min | TRASH | | |
| 2ST-3 | A | 3'-0" | 7'-0" | 1 3/4" | HM | HM | F1 | 90 min | STAIR 2 | | |
| 2T-3 | A | 3'-0" | 7'-0" | 1 3/4" | HM | HM | F1 | 90 min | TRASH | 33 | |
| 3A | A | 3'-0" | 7'-0" | 1 3/4" | HM | HM | F1 | 90 min | M/E-3-A | | |
| 3B | A | 3'-0" | 7'-0" | 1 3/4" | HM | HM | F1 | 90 min | M/E-3-B | | |
| 3C | A | 3'-0" | 7'-0" | 1 3/4" | HM | HM | F1 | 90 min | M/E-3-C | | |
| 3D | A | 3'-0" | 7'-0" | 1 3/4" | HM | HM | F1 | 90 min | M/E-3-D | | |
| 3E | A | 3'-0" | 7'-0" | 1 3/4" | HM | HM | F1 | 90 min | CORR. | | |
| 3F | A | 3'-0" | 7'-0" | 1 3/4" | HM | HM | F1 | 90 min | M/E-3-F | | |
| 3ST-3A | A | 3'-0" | 7'-0" | 1 3/4" | HM | HM | F1 | 90 min | CORR. | 6 | |
| 3ST-3B | A | 3'-0" | 7'-0" | 1 3/4" | HM | HM | F1 | 90 min | STAIR 3 | 6 | |
| 5ST-3 | A | 3'-0" | 7'-0" | 1 3/4" | HM | HM | F1 | 90 min | STAIR 5 | | |
| 6ST-3 | A | 3'-0" | 7'-0" | 1 3/4" | HM | HM | F1 | 90 min | CORR. | | |
| 7ST-3 | A | 3'-0" | 7'-0" | 1 3/4" | HM | HM | F1 | 90 min | CORR. | | |
| 127 | 13 | 5'-0" | 6'-8" | 1 3/8" | | | | | | | DOUBLE SWING DOOR |
| 479 | 13 | 5'-0" | 6'-8" | 1 3/8" | | | | | | | DOUBLE SWING DOOR |
| 680 | 13 | 5'-0" | 6'-8" | 1 3/8" | | | | | | | DOUBLE SWING DOOR |
| 2388 | 02 | 3'-0" | 7'-0" | 1/2" | | | | | | | BALCONY DOOR |
| 2389 | 05 | 2'-10" | 6'-8" | 1 3/4" | | | | | | | UNIT EXT. MECH DOOR |
| 2769 | 02 | 3'-0" | 7'-0" | 1/2" | | | | | | | BALCONY DOOR |
| 2836 | 05 | 2'-10" | 6'-8" | 1 3/4" | | | | | HVAC | | UNIT EXT. MECH DOOR |
| 2840 | 02 | 3'-0" | 7'-0" | 1/2" | | | | | | | BALCONY DOOR |
| 3002 | AA | 6'-0" | 8'-0" | 2" | HM | HM | F2 | 90 min | CORR. | | FIRE WALL |
| 3003 | AA | 6'-0" | 8'-0" | 2" | HM | HM | F2 | 90 min | CORR. | | FIRE WALL |
| 3004 | AA | 6'-0" | 8'-0" | 2" | HM | HM | F2 | 90 min | CORR. | | FIRE WALL |
| 3006 | AA | 6'-0" | 8'-0" | 2" | HM | HM | F2 | 90 min | CORR. | | FIRE WALL |
| C1010 | 05 | 2'-10" | 6'-8" | 1 3/4" | | | | | BALCONY | | UNIT EXT. MECH DOOR |
| C1022 | 02 | 3'-0" | 7'-0" | 1/2" | | | | | | | BALCONY DOOR |
| C1032 | 02 | 3'-0" | 7'-0" | 1/2" | | | | | | | BALCONY DOOR |
| C1040 | 05 | 2'-10" | 6'-8" | 1 3/4" | | | | | BALCONY | | UNIT EXT. MECH DOOR |
| C1052 | 02 | 3'-0" | 7'-0" | 1/2" | | | | | BALCONY | | BALCONY DOOR |
| C1060 | 05 | 2'-10" | 6'-8" | 1 3/4" | | | | | BALCONY | | UNIT EXT. MECH DOOR |
| C1072 | 02 | 3'-0" | 7'-0" | 1/2" | | | | | BALCONY | | BALCONY DOOR |
| C1080 | 05 | 2'-10" | 6'-8" | 1 3/4" | | | | | BALCONY | | UNIT EXT. MECH DOOR |
| C1312 | 05 | 2'-10" | 6'-8" | 1 3/4" | | | | | | | UNIT EXT. MECH DOOR |
| C1316 | AA | 6'-0" | 8'-0" | 2" | HM | HM | F2 | 90 min | CORR. | | FIRE WALL |
| G301A | EE | 6'-0" | 7'-0" | 1 3/8" | HM | AL | F2 | 90 min | VEST. | 40 | |
| G301B | BB | 6'-0" | 6'-11" | 1 3/4" | GL | AL | F2 | | | 37 | STOREFRONT |
| G302A | A | 3'-0" | 7'-0" | 1 3/4" | HM | HM | F1 | 90 min | VEST. | 42 | |
| G302B | B | 3'-0" | 6'-11" | 1 3/4" | GL | AL | F1 | | | 41 | STOREFRONT |
| FOURTH FLOOR | | | | | | | | | | | |
| 1ST-4 | A | 3'-0" | 7'-0" | 1 3/4" | HM | HM | F1 | 90 min | STAIR 1 | | |
| 1T-4 | A | 3'-0" | 7'-0" | 1 3/4" | HM | HM | F1 | 90 min | TRASH | | |
| 2ST-4 | A | 3'-0" | 7'-0" | 1 3/4" | HM | HM | F1 | 90 min | STAIR 2 | | |
| 2T-4 | A | 3'-0" | 7'-0" | 1 3/4" | HM | HM | F1 | 90 min | TRASH | 33 | |
| 3ST-4A | A | 3'-0" | 7'-0" | 1 3/4" | HM | HM | F1 | 90 min | CORR. | 6 | |
| 3ST-4B | A | 3'-0" | 7'-0" | 1 3/4" | HM | HM | F1 | 90 min | STAIR 3 | 6 | |
| 4A | A | 3'-0" | 7'-0" | 1 3/4" | HM | HM | F1 | 90 min | M/E-4-A | | |
| 4B | A | 3'-0" | 7'-0" | 1 3/4" | HM | HM | F1 | 90 min | M/E-4-B | | |
| 4C | A | 3'-0" | 7'-0" | 1 3/4" | HM | HM | F1 | 90 min | M/E-4-C | | |
| 4D | A | 3'-0" | 7'-0" | 1 3/4" | HM | HM | F1 | 90 min | M/E-4-D | | |
| 4E | A | 3'-0" | 7'-0" | 1 3/4" | HM | HM | F1 | 90 min | CORR. | | |
| 4F | A | 3'-0" | 7'-0" | 1 3/4" | HM | HM | F1 | 90 min | M/E-4-F | | |
| 5ST-4 | A | 3'-0" | 7'-0" | 1 3/4" | HM | HM | F1 | 90 min | STAIR 5 | | |
| 6ST-4 | A | 3'-0" | 7'-0" | 1 3/4" | HM | HM | F1 | 90 min | CORR. | | |
| 7ST-4 | A | 3'-0" | 7'-0" | 1 3/4" | HM | HM | F1 | 90 min | CORR. | | |
| 1773 | 13 | 5'-0" | 6'-8" | 1 3/8" | | | | | | | DOUBLE SWING DOOR |
| 1784 | 13 | 5'-0" | 6'-8" | 1 3/8" | | | | | | | DOUBLE SWING DOOR |
| 1792 | 13 | 5'-0" | 6'-8" | 1 3/8" | | | | | | | DOUBLE SWING DOOR |
| 2401 | 05 | 2'-10" | 6'-8" | 1 3/4" | | | | | | | UNIT EXT. MECH DOOR |
| 2757 | 02 | 3'-0" | 7'-0" | 1/2" | | | | | | | BALCONY DOOR |
| 2851 | 05 | 2'-10" | 6'-8" | 1 3/4" | | | | | | | UNIT EXT. MECH DOOR |
| 2852 | 02 | 3'-0" | 7'-0" | 1/2" | | | | | | | BALCONY DOOR |
| 4002 | AA | 6'-0" | 8'-0" | 2" | HM | HM | F2 | 90 min | CORR. | | FIRE WALL |
| 4003 | AA | 6'-0" | 8'-0" | 2" | HM | HM | F2 | 90 min | CORR. | | FIRE WALL |
| 4004 | AA | 6'-0" | 8'-0" | 2" | HM | HM | F2 | 90 min | CORR. | | FIRE WALL |
| 4006 | AA | 6'-0" | 8'-0" | 2" | HM | HM | F2 | 90 min | CORR. | | FIRE WALL |
| C1152 | 02 | 3'-0" | 7'-0" | 1/2" | | | | | BALCONY | | BALCONY DOOR |
| C1162 | 02 | 3'-0" | 7'-0" | 1/2" | | | | | BALCONY | | BALCONY DOOR |
| C1170 | 05 | 2'-10" | 6'-8" | 1 3/4" | | | | | BALCONY | | UNIT EXT. MECH DOOR |
| C1182 | 02 | 3'-0" | 7'-0" | 1/2" | | | | | BALCONY | | BALCONY DOOR |
| C1190 | 05 | 2'-10" | 6'-8" | 1 3/4" | | | | | BALCONY | | UNIT EXT. MECH DOOR |
| C1202 | 02 | 3'-0" | 7'-0" | 1/2" | | | | | BALCONY | | BALCONY DOOR |
| C1280 | 05 | 2'-10" | 6'-8" | 1 3/4" | | | | | | | UNIT EXT. MECH DOOR |
| C1301 | 05 | 2'-10" | 6'-8" | 1 3/4" | | | | | | | UNIT EXT. MECH DOOR |
| C1305 | AA | 6'-0" | 8'-0" | 2" | HM | HM | F2 | 90 min | CORR. | | FIRE WALL |
| G401A | EE | 6'-0" | 7'-0" | 1 3/8" | HM | AL | F2 | 90 min | VEST. | 40 | |
| G401B | BB | 6'-0" | 6'-11" | 1 3/4" | GL | AL | F2 | | | 37 | STOREFRONT |
| G402A | A | 3'-0" | 7'-0" | 1 3/4" | HM | HM | F1 | 90 min | VEST. | 42 | |
| G402B | B | 3'-0" | 6'-11" | 1 3/4" | GL | AL | F1 | | | 41 | STOREFRONT |
| T.O.ROOF | | | | | | | | | | | |
| 5ST-5 | A | 3'-0" | 7'-0" | 1 3/4" | HM | HM | F1 | 90 min | | | |

## WINDOW SCHEDULE

| MARK | WIDTH | HEIGHT | WINDOW TYPE | CONSTRUCTION TYPE | COMMENTS |
|---|---|---|---|---|---|
| A | 3'-0" | 6'-0" | SINGLE HUNG | VINYL | All windows to be provided with opening limiters. See specifications. |
| B | 6'-3 1/2" | 6'-0" | SINGLE HUNG | VINYL | All windows to be provided with opening limiters. See specifications. |

## FRAME TYPES

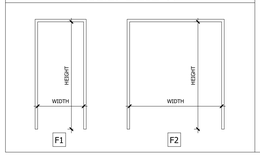


**DOOR/FRAME MATERIAL KEY:**

| | |
|---|---|
| AL | ALUMINUM |
| EM | EXTERIOR METAL |
| GL | GLASS |
| HC | HOLLOW CORE |
| HM | HOLLOW METAL |
| MTL | METAL |
| SC | SOLID CORE |
| SR | STILE & RAIL |
| VY | VINYL |
| WD | WOOD |
| MTE | MASONITE |

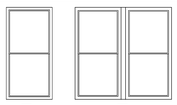


NOTE: (2) 2X6 FRT STUDS PROVIDED BETWEEN GROUP WINDOWS. (TYPICAL)
PROVIDE 4" LIMITATION FOR WINDOW LIMITERS ON ALL WINDOWS

## PUBLIC DOOR TYPES

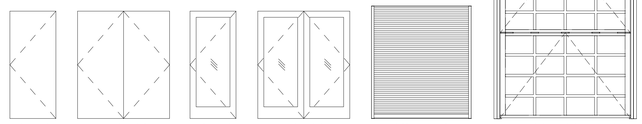


## DOOR JAMB AND HEAD DETAILS & ASSUMPTIONS

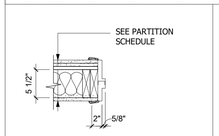


UNIT ENTRY DOOR
A: JAMB & HEAD DETAIL

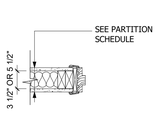


DOOR INSIDE UNIT
B: JAMB & HEAD DETAIL

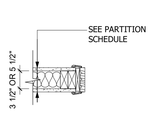


CASED OPENING INSIDE UNIT (IF NEEDED)
C: JAMB & HEAD DETAIL

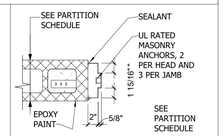


WOOD/METAL STUD: RETAIL
D: JAMB & HEAD DETAIL

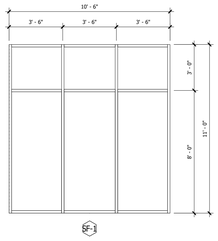

SF-1

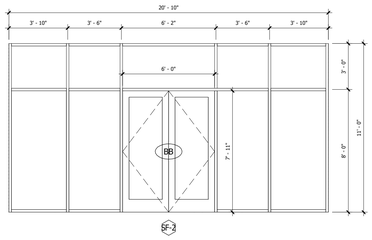

SF-2

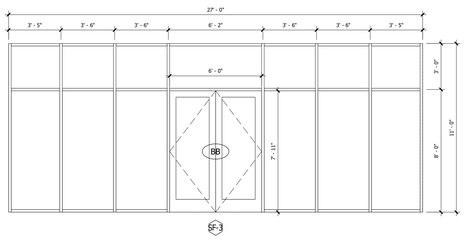

SF-3

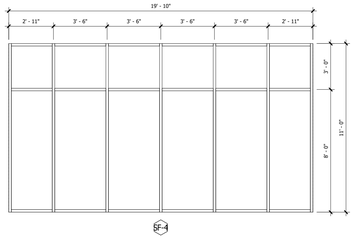

SF-4

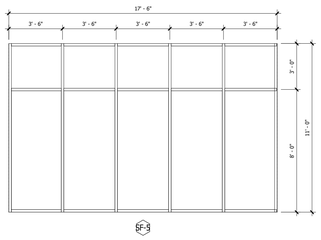

SF-5

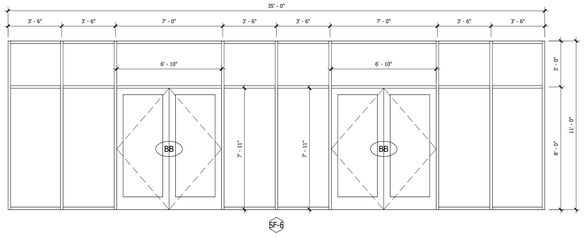

SF-6

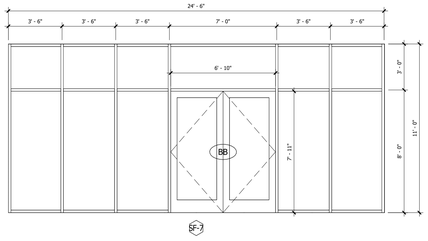

SF-7

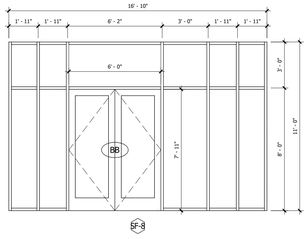

SF-8

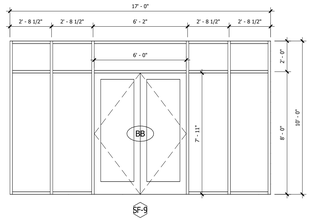

SF-9

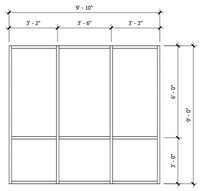

SF-10B

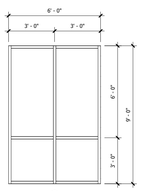

SF-11B

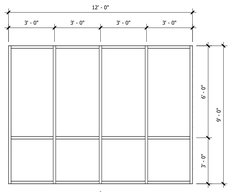

SF-12B

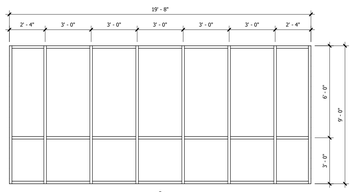

SF-13B

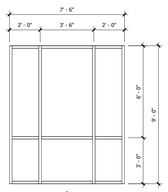

SF-14B

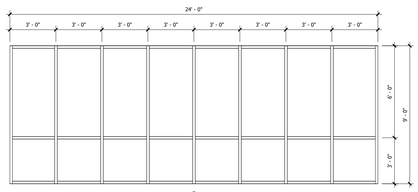

SF-15B

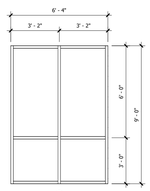

SF-16B

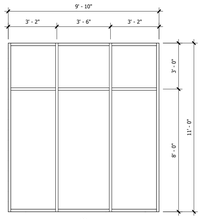

SF-10

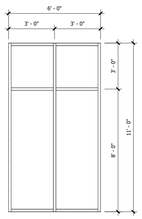

SF-11

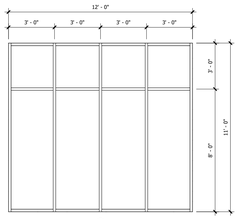

SF-12

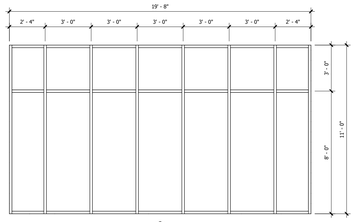

SF-13

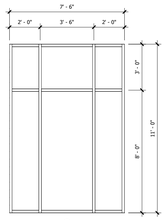

SF-14

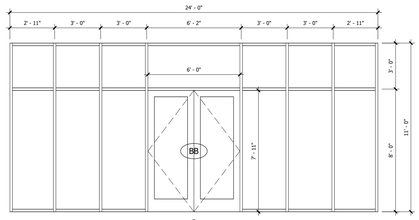

SF-15

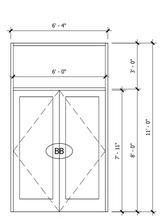

SF-16

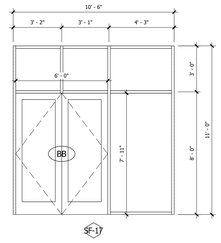

SF-17

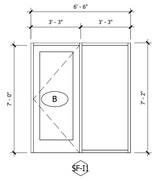

SF-11

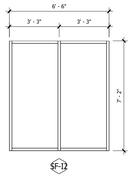

SF-12

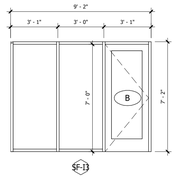

SF-13

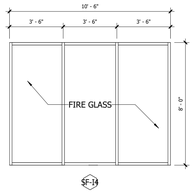

SF-14

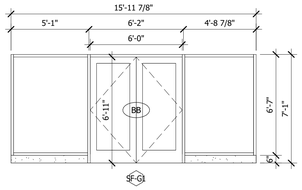

SF-G1

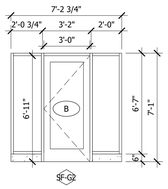

SF-G2

| STOREFRONT SCHEDULE | | | |
|---|---|---|---|
| Mark | Length | Height | Count |
| SF-1 | 10'-6" | 11'-0" | 10 |
| SF-2 | 20'-10" | 11'-0" | 2 |
| SF-3 | 27'-0" | 11'-0" | 2 |
| SF-4 | 19'-10" | 11'-0" | 1 |
| SF-5 | 17'-6" | 11'-0" | 1 |
| SF-6 | 35'-0" | 11'-0" | 1 |
| SF-7 | 24'-6" | 11'-0" | 1 |
| SF-8 | 16'-10" | 11'-0" | 1 |
| SF-9 | 17'-0" | 10'-0" | 1 |
| SF-10 | 9'-10" | 11'-0" | 2 |
| SF-10B | 9'-10" | 9'-0" | 1 |
| SF-11 | 6'-0" | 11'-0" | 3 |
| SF-11B | 6'-0" | 9'-0" | 2 |
| SF-12 | 12'-0" | 11'-0" | 4 |
| SF-12B | 12'-0" | <varies> | 3 |
| SF-13 | 19'-8" | 11'-0" | 2 |
| SF-13B | 19'-8" | 9'-0" | 2 |
| SF-14 | 7'-6" | 11'-0" | 2 |
| SF-14B | 7'-6" | 9'-0" | 2 |
| SF-15 | 24'-0" | 11'-0" | 1 |
| SF-15B | 24'-0" | 9'-0" | 1 |
| SF-16 | 6'-4" | 11'-0" | 2 |
| SF-16B | 6'-4" | 9'-0" | 1 |
| SF-17 | 10'-6" | 11'-0" | 1 |
| SF-G1 | 16'-8 1/4" | 10'-8" | 2 |
| SF-G2 | 7'-8 9/16" | 10'-8" | 5 |
| SF-I1 | 6'-6" | 12'-0" | 2 |
| SF-I2 | 6'-6" | 12'-0" | 1 |
| SF-I3 | 9'-2" | 12'-0" | 2 |
| SF-I4 | 10'-6 5/256" | 8'-0" | 2 |

ALL REPORTS, PLANS, SPECIFICATIONS AND COMPUTER FILES RELATING TO THIS PROJECT ARE THE PROPERTY OF THE MARTIN ARCHITECTURAL GROUP. THE MARTIN ARCHITECTURAL GROUP RETAINS ALL COMMON LAW, STATUTE AND OTHER RESERVED RIGHTS INCLUDING THE COPYRIGHT THERETO. REPRODUCTION OF THE MATERIAL HEREIN OR SUBSTANTIAL USE WITHOUT WRITTEN PERMISSION OF THE MARTIN ARCHITECTURAL GROUP VIOLATES THE COPYRIGHT LAWS OF THE UNITED STATES AND WILL BE SUBJECT TO LEGAL PROSECUTION.
©2022, The Martin Architectural Group, P.C.

COMMONWEALTH OF PENNSYLVANIA REGISTERED ARCHITECT DREW ROMANIC No. RA-020015

THE MARTIN ARCHITECTURAL GROUP, P.C.
ARCHITECTS AND LAND PLANNERS
A PROFESSIONAL CORPORATION
240 NORTH 22ND STREET, PHILADELPHIA, PA, 19103
P (215) 665-1680 F (215) 561-5064

| | |
|---|---|
| P.A.: | DREW ROMANIC |
| P.M.: | JASON DECAMPLI |
| DRAWN BY: | Author |
| PROJECT NO: | 1362-12 |

| NO. | REVISION | DATE |
|---|---|---|
| 1 | PERMIT-SET | 12/20/22 |

# STOREFRONT SCHEDULE

## Granite Run Apartment 02

MIDDLETOWN TOWNSHIP, PA

SCALE:
DATE: 09/30/22

**A7.03**

©2022, The Martin Architectural Group, P.C.

Printed: 1/13/2023 4:53:31 PM

## HARDWARE SCHEDULE

| HARDWARE SET | QTY. | ITEM | ID NO. | FINISH | MANUFACTURER | NOTES | GENERAL NOTE |
|---|---|---|---|---|---|---|---|
| SET 1<br><br>Doors: C101A, R001A, R001B, R001C, R001D, R001E | 2 | CONTINUOUS HINGE | 780-112HD x LAR x RBCC | CLR | HAGER | | |
| | 2 | EXIT DEVICE | 3347A EO | US26D | VON DUPRIN | | |
| | 1 | RIM CYLINDER | 3901 SFIC | US26D | HAGER | | |
| | 1 | CYLINDER CORE | 3969-C | US26D | HAGER | | |
| | 2 | DOOR PULL | H 12L | US32D | HAGER | | |
| | 2 | CLOSER | 5100 HDCS | ALM | HAGER | | |
| | 1 | THRESHOLD | 413S x LAR | MIL | HAGER | | |
| | 1 | GASKETING | PERIM. GASKET BY FRM. MFR. | | BYOT | | |
| | 1 | MEETING STILES | GASKETS BY DOOR MFR. | | BYOT | | |
| | 2 | DOOR SWEEP(S) | 750S N x LAR | CLR | HAGER | | |
| SET 2<br><br>Doors: R002E | 2 | CONTINUOUS HINGE | 780-111HD x LAR RBCC | CLR | HAGER | | |
| | 1 | MULLION | 490XX x LAR | USP | HAGER | | |
| | 2 | EXIT DEVICE | 4501 RIM | US32D | HAGER | | |
| | 1 | EXITT TRIM | 45NL CHA | US26D | HAGER | | |
| | 1 | RIM CYLINDER | 3901 SFIC | US26D | HAGER | | |
| | 2 | CYLINDER CORE | 3969-C | US26D | HAGER | | |
| | 2 | CLOSER | 5100 HDCS | ALM | HAGER | | |
| | 2 | KICK PLATE(S) | 190S 10" x 2" LDW | US32D | HAGER | | |
| | 1 | THRESHOLD | 520S N x LAR | MIL | HAGER | | |
| | 1 | WEATHERSTRIP | 881S N x LAR | MIL | HAGER | | |
| | 1 | MULLION SEAL | 710S x LAR | BLACK | HAGER | | |
| | 2 | DOOR SWEEP(S) | 770S V x LAR | MIL | HAGER | | |
| SET 3<br><br>Doors: R009B | 2 | CONTINUOUS HINGE | 780-111HD x LAR RBCC | CLR | HAGER | | |
| | 2 | EXIT DEVICE | 4501 CVR | US32D | HAGER | | |
| | 1 | EXIT TRIM | 45NL CHA | US26D | HAGER | | |
| | 1 | RIM CYLINDER | 3901 SFIC | US26D | HAGER | | |
| | 1 | CYLINDER CORE | 3969-C | US26D | HAGER | | |
| | 2 | CLOSER | 5100 HDCS | ALM | HAGER | | |
| | 2 | KICK PLATE | 190S 10" x 1" LDW | US32D | HAGER | | |
| | 1 | THRESHOLD | 520S N x LAR | MIL | HAGER | | |
| | 1 | WEATHERSTRIP | 881S N x LAR | MIL | HAGER | | |
| | 2 | MEETING STILES | 872S N x LAR | CLR | HAGER | | |
| | 2 | DOOR SWEEP(S) | 770S V x LAR | MIL | HAGER | | |
| | 1 | RAIN DRIP CAP | 810S x LAR | MIL | HAGER | | |
| SET 4<br><br>Doors: 1ST-2B, 2ST-G, 3ST-G, 4ST-G, 5ST-CB, 6ST-R, 7ST-R, 8ST-R4, 9ST-CB | 1 | CONTINUOUS HINGE | 780-111HD x LAR RBCC | CLR | HAGER | | |
| | 1 | EXIT DEVICE | 4501 RIM | US32D | HAGER | | |
| | 1 | EXIT TRIM | 45NL CHA | US26D | HAGER | | |
| | 1 | RIM CYLINDER | 3901 SFIC | US26D | HAGER | | |
| | 1 | CYLINDER CORE | 3969-C | US26D | HAGER | | |
| | 1 | CLOSER | 5100 HDCS | ALM | HAGER | | |
| | 1 | KICK PLATE | 190S 10" x 2" LDW | US32D | HAGER | | |
| | 1 | THRESHOLD | 520S N x LAR | MIL | HAGER | | |
| | 1 | WEATHERSTRIP | 881S N x LAR | MIL | HAGER | | |
| | 1 | DOOR SWEEP(S) | 770S V x LAR | MIL | HAGER | | |
| | 1 | RAIN DRIP CAP | 810S x LAR | MIL | HAGER | | |
| SET 5<br>Doors: R003A, R003B | 6 | HINGE(S) | BB1168 4 1/2 X 4 1/2 NRP | US26D | HAGER | | |
| | 2 | EXIT DEVICE | 4501 CLB | US32D | HAGER | | |
| | 1 | EXIT TRIM | 45CE CHA | US26D | HAGER | | |
| | 1 | MORTISE CYLINDER | 3902 SFIC x LAR | US26D | HAGER | | |
| | 1 | CYLINDER CORE | 3969-C | US26D | HAGER | | |
| | 2 | CLOSER | 5200 HD | ALM | HAGER | | |
| | 2 | KICK PLATE(S) | 190S 10" x 1" LDW | US32D | HAGER | | |
| | 2 | WALL STOP(S) | 232W | US32D | HAGER | | |
| | 1 | SEAL | 726 x LAR | S | HAGER | | |
| | 2 | MEETING STILES | 872S N x LAR | CLR | HAGER | | |
| SET 6<br><br>Doors: 1ST-2, 1ST-3, 1ST-4, 1ST-C2A, 2ST-2, 2ST-3, 2ST-4, 3ST-1A, 3ST-1B, 3ST-2A, 3ST-2B, 3ST-3A, 3ST-3B, 3ST-4A, 3ST-4B, 5ST-1, 5ST-2, 5ST-3, 5ST-4, 5ST-CA, 6ST-1, 6ST-2, 6ST-3, 6ST-4, 7ST-1, 7ST-2, 7ST-3, 7ST-4, 8ST-C1, 9ST-1, 9ST-CA, 8ST-R2 | 3 | HINGE | BB1168 4 1/2 X 4 1/2 | US26D | HAGER | | |
| | 1 | EXIT DEVICE | 4501 RIM F | US32D | HAGER | | |
| | 1 | EXIT TRIM | 45BE CHA | US26D | HAGER | | |
| | 1 | CLOSER | 5200 | ALM | HAGER | | |
| | 1 | KICK PLATE(S) | 190S 10" x 2" LDW | US32D | HAGER | | |
| | 1 | WALL STOP(S) | 232W | US32D | HAGER | | |
| | 1 | SEAL | 726 x LAR | S | HAGER | | |
| SET 7<br><br>Doors: 1ST-C1 | 3 | HINGE(S) | BB1168 4 1/2 X 4 1/2 | US26D | HAGER | | |
| | 1 | EXIT DEVICE | 4501 RIM F | US32D | HAGER | | |
| | 1 | EXIT TRIM | 45BE CHA | US26D | HAGER | | |
| | 1 | CLOSER | 5200 HD | ALM | HAGER | | |
| | 1 | KICK PLATE(S) | 190S 10" x 2" LDW | US32D | HAGER | | |
| | 1 | WALL STOP(S) | 232W | US32D | HAGER | | |
| | 1 | SEAL | 726 x LAR | S | HAGER | | |
| SET 8<br><br>Doors: R009A | 3 | HINGE(S) | BB1279 4 1/2 X 4 1/2 | US26D | HAGER | | |
| | 1 | EXIT DEVICE | 4501 RIM | US32D | HAGER | | |
| | 1 | EXIT TRIM | 45BE CHA | US26D | HAGER | | |
| | 1 | CLOSER | 5200 HD | ALM | HAGER | | |
| | 1 | KICK PLATE(S) | 190S 10" x 2" LDW | US32D | HAGER | | |
| | 1 | WALL STOP(S) | 232W | US32D | HAGER | | |
| | 1 | SEAL | 726 x LAR | S | HAGER | | |
| SET 9<br><br>Doors: C1003 | 3 | HINGE(S) | BB1168 4 1/2 X 4 1/2 NRP | US26D | HAGER | | |
| | 1 | EXIT DEVICE | 4501 RIM F | US32D | HAGER | | |
| | 1 | EXIT TRIM | 45NL CHA | US26D | HAGER | | |
| | 1 | CLOSER | 5200 | ALM | HAGER | | |
| | 1 | KICK PLATE(S) | 190S 10" x 2" LDW | US32D | HAGER | | |
| | 1 | WALL STOP(S) | 232W | US32D | HAGER | | |
| | 1 | SEAL | 726 x LAR | S | HAGER | | |
| SET 10<br><br>Doors: SSTCA, 8ST-R3 | 3 | HINGE(S) | BB1168 4 1/2 X 4 1/2 NRP | US26D | HAGER | | |
| | 1 | EXIT DEVICE | 4501 RIM F | US32D | HAGER | | |
| | 1 | EXIT TRIM | 45NL CHA | US26D | HAGER | | |
| | 1 | CYLINDER CORE | 3969-C | US26D | HAGER | | |
| | 1 | RIM CYLINDER | 3901 SFIC | US26D | HAGER | | |
| | 1 | CLOSER | 5200 HD | ALM | HAGER | | |
| | 1 | KICK PLATE(S) | 190S 10" x 2" LDW | US32D | HAGER | | |
| | 1 | WALL STOP(S) | 232W | US32D | HAGER | | |
| | 1 | SEAL | 726 x LAR | S | HAGER | | |
| SET 11<br><br>Doors: 1002, 1003, 1004, 1006, 2001, 2002, 2003, 2004, 2006, 3001, 3002, 3003, 3004, 3006, 4001, 4002, 4003, 4004, 4006, 1001 | 6 | HINGE(S) | BB1279 4 1/2 X 4 1/2 | US26D | HAGER | - DOORS HELD BY MAGNETIC HOLD-OPEN.<br>- ACTIVATION OF FIRE ALARM OR LOSS OF POWER RELEASES MAGNETS, DOORS CLOSE AND LATCH.<br>- DOORS MAY BE RELEASED FROM MAGNETS MANUALLY. | |
| | 2 | EXIT DEVICE | 4501 LBR F | US32D | HAGER | | |
| | 2 | MAG HOLDER | 380F | LS | HAGER | | |
| | 2 | CLOSER | 5200 | ALM | HAGER | | |
| | 2 | KICK PLATE | 190S 10" x 1" LDW | US32D | HAGER | | |
| | 1 | SEAL | 726 x LAR | S | HAGER | | |
| | 1 | RISER DIAGRAM | WIRE/RISER DOCUMENTS | - | - | | |
| SET 12<br><br>Doors: P101, P102, R006B, R008B | 2 | CONTINUOUS HINGE | 780-111HD X LAR RBCC | CLR | HAGER | | |
| | 1 | SET MANUAL FLUSH BOLT | 282D | US26D | HAGER | | |
| | 1 | DUST PROOF STRIKE | 280X | US26D | HAGER | | |
| | 1 | LOCKSET | 3881 SECT CHA SFIC | US26D | HAGER | | |
| | 1 | CYLINDER CORE | 3969-C | US26D | HAGER | | |
| | 1 | OVERHEAD STOP | 7016 SRF<br>*INACTIVE LEAF | US32D | HAGER | | |
| | 1 | CLOSER | 5100 HDCS<br>*ACTIVE LEAF | ALM | HAGER | | |
| | 2 | KICK PLATE | 190S 10" X 1" LDW | US32D | HAGER | | |
| | 1 | THRESHOLD | 413S X LAR | MIL | HAGER | | |
| | 1 | WEATHERSTRIP | 881S N X LAR | MIL | HAGER | | |
| | 2 | DOOR SWEEP(S) | 770S V X LAR | MIL | HAGER | | |
| | 1 | ASTRAGAL | BY DOOR MANUFACTURER | | BYOT | | |
| | 1 | RAIN DRIP CAP | 810S X LAR | MIL | HAGER | | |
| SET 13<br><br>Doors: R004B, R007B | 1 | CONTINUOUS HINGE | 780-111HD x LAR RBCC | CLR | HAGER | | |
| | 1 | LOCKSET | 3881 SECT CHA SFIC | US26D | HAGER | | |
| | 1 | CYLINDER CORE | 3969-C | US26D | HAGER | | |
| | 1 | CLOSER | 5100 HDCS | ALM | HAGER | | |
| | 1 | KICK PLATE(S) | 190S 10" x 2" LDW | US32D | HAGER | | |
| | 1 | THRESHOLD | 413S x LAR | MIL | HAGER | | |
| | 1 | DOOR SWEEP(S) | 770S V x LAR | MIL | HAGER | | |
| | 1 | RAIN DRIP CAP | 810S x LAR | MIL | HAGER | | |
| SET 14<br><br>Doors: SST-5 | 3 | HINGE(S) | BB1279 4 1/2 X 4 1/2 | US26D | HAGER | | |
| | 1 | LOCKSET | 3881 SECT CHA SFIC | US26D | HAGER | | |
| | 1 | CYLINDER CORE | 3969-C | US26D | HAGER | | |
| | 1 | CLOSER | 5100 | ALM | HAGER | | |
| | 1 | KICK PLATE(S) | 190S 10" x 2" LDW | US32D | HAGER | | |
| | 1 | WALL STOP(S) | 232W | US32D | HAGER | | |
| | 1 | SADDLE THRESHOLD | 412S x LAR | MIL | HAGER | | |
| | 1 | SEAL | 726 x LAR | S | HAGER | | |
| | 1 | DOOR BOTTOM | 780S N x LAR | MIL | HAGER | | |
| | 1 | RAIN DRIP CAP | 810S x LAR | MIL | HAGER | | |
| SET 15<br><br>Doors: R002A, R002B, R002C, R002D | 6 | HINGE(S) | BB1279 4 1/2 x 4 1/2 NRP | US26D | HAGER | | |
| | 1 | AUTO FLUSH BOLT SET | 292D | US32D | HAGER | | |
| | 1 | DUST PROOF STRIKE | 280X | US26D | HAGER | | |
| | 1 | LOCKSET | 3880 SECT CHA SFIC | US26D | HAGER | | |
| | 1 | CYLINDER CORE | 3969-C | US26D | HAGER | | |
| | 1 | COORDINATOR | 297D x LAR | BLACK | HAGER | | |
| | 2 | MOUNTING BRACKET(S) | 297B | BLACK | HAGER | | |
| | 2 | CLOSER | 5200 HDCS | ALM | HAGER | | |
| | 2 | KICK PLATE | 190S 10" x 1" LDW | US32D | HAGER | | |
| | 1 | SEAL | 726 x LAR | S | HAGER | | |
| | 1 | ASTRAGAL | BY DOOR MANUFACTURER | - | BYOT | | |

## HARDWARE SCHEDULE

| HARDWARE SET | QTY. | ITEM | ID NO. | FINISH | MANUFACTURER | NOTES | GENERAL NOTE |
|---|---|---|---|---|---|---|---|
| SET 16<br><br>Doors: R005B | 6 | HINGE(S) | BB1279 4 1/2 X 4 1/2 | US26D | HAGER | | |
| | 1 | SET MANUAL FLUSH BOLT | 282D | US26D | HAGER | | |
| | 1 | DUST PROOF STRIKE | 280X | US26D | HAGER | | |
| | 1 | LOCKSET | 3880 SECT CHA SFIC | US26D | HAGER | | |
| | 1 | CYLINDER CORE | 3969-C | US26D | HAGER | | |
| | 1 | CLOSER | 5200<br>*ACTIVE LEAF | ALM | HAGER | | |
| | 2 | KICK PLATE | 190S 10" X 1" LDW | US32D | HAGER | | |
| | 2 | WALL STOP(S) | 232W | US32D | HAGER | | |
| | 1 | SEAL | 726 X LAR | S | HAGER | | |
| | 1 | ASTRAGAL | BY DOOR MANUFACTURER | - | BYOT | | |
| SET 17<br><br>Doors: R005A | 6 | HINGE(S) | BB1279 4 1/2 X 4 1/2 | US26D | HAGER | | |
| | 1 | SET MANUAL FLUSH BOLT | 282D | US26D | HAGER | | |
| | 1 | DUST PROOF STRIKE | 280X | US26D | HAGER | | |
| | 1 | LOCKSET | 3880 SECT CHA SFIC | US26D | HAGER | | |
| | 1 | CYLINDER CORE | 3969-C | US26D | HAGER | | |
| | 1 | CLOSER | 5200 TRK NHOTA<br>*ACTIVE LEAF | ALM | HAGER | | |
| | 2 | KICK PLATE | 190S 10" X 1" LDW | US32D | HAGER | | |
| | 1 | WALL STOP(S) | 232W | US32D | HAGER | | |
| | 1 | SEAL | 726 X LAR | S | HAGER | | |
| | 1 | ASTRAGAL | BY DOOR MANUFACTURER | - | BYOT | | |
| SET 18<br><br>Doors: R006A | 6 | HINGE(S) | BB1279 4 1/2 X 4 1/2 | US26D | HAGER | | |
| | 1 | SET MANUAL FLUSH BOLT | 282D | US26D | HAGER | | |
| | 1 | DUST PROOF STRIKE | 280X | US26D | HAGER | | |
| | 1 | LOCKSET | 3880 SECT CHA SFIC | US26D | HAGER | | |
| | 1 | CYLINDER CORE | 3969-C | US26D | HAGER | | |
| | 1 | CLOSER | 5200 TRK NHOTA<br>*ACTIVE LEAF | ALM | HAGER | | |
| | 2 | KICK PLATE | 190S 10" X 1" LDW | US32D | HAGER | | |
| | 2 | WALL STOP(S) | 232W | US32D | HAGER | | |
| | 1 | SEAL | 726 X LAR | S | HAGER | | |
| | 1 | ASTRAGAL | BY DOOR MANUFACTURER | - | BYOT | | |
| SET 19<br><br>Doors: R008A | 6 | HINGE(S) | BB1168 4 1/2 X 4 1/2 NRP | US26D | HAGER | | |
| | 1 | SET MANUAL FLUSH BOLT | 282D | US26D | HAGER | | |
| | 1 | DUST PROOF STRIKE | 280X | US26D | HAGER | | |
| | 1 | LOCKSET | 3880 SECT CHA SFIC | US26D | HAGER | | |
| | 1 | CYLINDER CORE | 3969-C | US26D | HAGER | | |
| | 1 | OVERHD DOOR HLD OPN | 7017 SRF<br>*INACTIVE LEAF | US32D | HAGER | | |
| | 1 | CLOSER | 5100 5108-HDHO<br>*ACTIVE LEAF | ALM | HAGER | | |
| | 2 | ARMOR PLATE | 190S 36" X 1" LDW | US32D | HAGER | | |
| | 1 | SEAL | 726 X LAR | S | HAGER | | |
| | 1 | ASTRAGAL | BY DOOR MANUFACTURER | - | BYOT | | |
| SET 20<br><br>Doors: 2T-GA, R007A | 3 | HINGE(S) | BB1279 4 1/2 X 4 1/2 | US26D | HAGER | | |
| | 1 | LOCKSET | 3880 SECT CHA SFIC | US26D | HAGER | | |
| | 1 | CYLINDER CORE | 3969-C | US26D | HAGER | | |
| | 1 | CLOSER | 5100 | ALM | HAGER | | |
| | 1 | KICK PLATE(S) | 190S 10" x 2" LDW | US32D | HAGER | | |
| | 1 | WALL STOP(S) | 232W | US32D | HAGER | | |
| | 1 | SEAL | 726 x LAR | S | HAGER | | |
| | 1 | AUTO. DOOR BOTTOM | 742S V x LAR | MIL | HAGER | | |
| SET 21<br><br>Doors: C119 | 6 | HINGE(S) | BB1279 4 1/2 X 4 1/2 | US26D | HAGER | | |
| | 1 | SET MANUAL FLUSH BOLT | 282D | US26D | HAGER | | |
| | 1 | DUST PROOF STRIKE | 280X | US26D | HAGER | | |
| | 1 | LOCKSET | 3880 SECT CHA SFIC | US26D | HAGER | | |
| | 1 | CYLINDER CORE | 3969-C | US26D | HAGER | | |
| | 1 | CLOSER | 5200 HO<br>*ACTIVE LEAF | ALM | HAGER | | |
| | 2 | KICK PLATE | 190S 10" X 1" LDW | US32D | HAGER | | |
| | 2 | WALL STOP(S) | 232W | US32D | HAGER | | |
| | 2 | SILENCER | BY FRAME MFR. | - | BYOT | | |
| SET 22<br><br>Doors: C107, C113, C124 | 3 | HINGE(S) | BB1279 4 1/2 X 4 1/2 | US26D | HAGER | | |
| | 1 | LOCKSET | 3880 SECT CHA SFIC | US26D | HAGER | | |
| | 1 | CYLINDER CORE | 3969-C | US26D | HAGER | | |
| | 1 | CLOSER | 5200 | ALM | HAGER | | |
| | 1 | KICK PLATE(S) | 190S 10" x 2" LDW | US32D | HAGER | | |
| | 1 | WALL STOP(S) | 232W | US32D | HAGER | | |
| | 3 | SILENCER | BY FRAME MFR. | - | BYOT | | |
| SET 23<br><br>Doors: 1A, 1B, 1C, 1E, 1F, 2A, 2B, 2C, 2D, 2E, 2F, 3A, 3B, 3C, 3D, 3E, 3F, 4A, 4B, 4C, 4D, 4E, 4F | 3 | HINGE(S) | BB1279 4 1/2 X 4 1/2 | US26D | HAGER | | |
| | 1 | LOCKSET | 3880 SECT CHA SFIC | US26D | HAGER | | |
| | 1 | CLOSER | 5200 | ALM | HAGER | | |
| | 1 | KICK PLATE(S) | 190S 10" x 2" LDW | US32D | HAGER | | |
| | 1 | WALL STOP(S) | 232W | US32D | HAGER | | |
| | 3 | SILENCER(S) | 307D | GREY | HAGER | | |
| SET 24<br><br>Doors: C112 | 3 | HINGE(S) | BB1279 4 1/2 x 4 1/2 NRP | US26D | HAGER | | |
| | 1 | LOCKSET | 3880 SECT CHA SFIC | US26D | HAGER | | |
| | 1 | CYLINDER CORE | 3969-C | US26D | HAGER | | |
| | 1 | CLOSER | 5200 HDCS | ALM | HAGER | | |
| | 3 | SILENCER | BY FRAME MFR. | - | BYOT | | |
| SET 25<br><br>Doors: R004A | 6 | HINGE(S) | BB1168 4 1/2 X 4 1/2 NRP | US26D | HAGER | | |
| | 1 | SET MANUAL FLUSH BOLT | 282D | US26D | HAGER | | |
| | 1 | DUST PROOF STRIKE | 280X | US26D | HAGER | | |
| | 1 | LOCKSET | 3870 SECT CHA SFIC | US26D | HAGER | | |
| | 1 | CYLINDER CORE | 3969-C | US26D | HAGER | | |
| | 1 | OVERHEAD STOP | 7016 SRF<br>*INACTIVE LEAF | US32D | HAGER | | |
| | 1 | CLOSER | 5100 HDCS<br>*ACTIVE LEAF | ALM | HAGER | | |
| | 2 | KICK PLATE | 190S 10" X 1" LDW | US32D | HAGER | | |
| | 2 | ASTRAGAL | 802S B X LAR | MIL | HAGER | | |
| | 2 | SILENCER(S) | 307D | GREY | HAGER | | |
| SET 26<br><br>Doors: C111 | 6 | HINGE(S) | BB1168 4 1/2 X 4 1/2 NRP | US26D | HAGER | | |
| | 1 | SET MANUAL FLUSH BOLT | 282D | US26D | HAGER | | |
| | 1 | DUST PROOF STRIKE | 280X | US26D | HAGER | | |
| | 1 | LOCKSET | 3870 SECT CHA SFIC | US26D | HAGER | | |
| | 1 | CYLINDER CORE | 3969-C | US26D | HAGER | | |
| | 1 | OVERHEAD STOP | 7016 SRF<br>*INACTIVE LEAF | US32D | HAGER | | |
| | 1 | CLOSER | 5200 HDCS<br>*ACTIVE LEAF | ALM | HAGER | | |
| | 2 | KICK PLATE | 190S 10" X 1" LDW | US32D | HAGER | | |
| | 2 | ASTRAGAL | 802S B X LAR | MIL | HAGER | | |
| | 2 | SILENCER(S) | BY FRAME MFR. | - | BYOT | | |
| SET 27<br><br>Doors: C117, C118 | 6 | HINGE(S) | BB1279 4 1/2 X 4 1/2 | US26D | HAGER | | |
| | 1 | SET MANUAL FLUSH BOLT | 282D | US26D | HAGER | | |
| | 1 | DUST PROOF STRIKE | 280X | US26D | HAGER | | |
| | 1 | LOCKSET | 3870 SECT CHA SFIC | US26D | HAGER | | |
| | 1 | CYLINDER CORE | 3969-C | US26D | HAGER | | |
| | 1 | CLOSER | 5200<br>*ACTIVE LEAF | ALM | HAGER | | |
| | 2 | KICK PLATE | 190S 10" X 1" LDW | US32D | HAGER | | |
| | 1 | WALL STOP(S) | 232W | US32D | HAGER | | |
| | 2 | ASTRAGAL | 802S B X LAR | MIL | HAGER | | |
| | 2 | SILENCER(S) | BY FRAME MFR. | - | BYOT | | |
| SET 28<br><br>Doors: C1002, C202B | 6 | HINGE(S) | BB1168 4 1/2 X 4 1/2 | US26D | HAGER | | |
| | 1 | SET MANUAL FLUSH BOLT | 282D | US26D | HAGER | | |
| | 1 | DUST PROOF STRIKE | 280X | US26D | HAGER | | |
| | 1 | LOCKSET | 3870 SECT CHA SFIC | US26D | HAGER | | |
| | 1 | CYLINDER CORE | 3969-C | US26D | HAGER | | |
| | 1 | CLOSER | 5200<br>*ACTIVE LEAF | ALM | HAGER | | |
| | 2 | KICK PLATE | 190S 10" X 1" LDW | US32D | HAGER | | |
| | 2 | WALL STOP(S) | 232W | US32D | HAGER | | |
| | 2 | ASTRAGAL | 802S B X LAR | MIL | HAGER | | |
| | 2 | SILENCER(S) | BY FRAME MFR. | - | BYOT | | |
| SET 29<br><br>Doors: 1005 | 1 | CONTINUOUS HINGE | 78D-111HD x LAR RBCC | CLR | HAGER | | |
| | 1 | LOCKSET | 3870 SECT CHA SFIC | US26D | HAGER | | |
| | 1 | CYLINDER CORE | 3969-C | US26D | HAGER | | |
| | 1 | CLOSER | 5100 HDCS | ALM | HAGER | | |
| | 1 | KICK PLATE(S) | 190S 10" x 2" LDW | US32D | HAGER | | |
| | 1 | THRESHOLD | 520S N x LAR | MIL | HAGER | | |
| | 1 | WEATHERSTRIP | 881S N x LAR | MIL | HAGER | | |
| | 1 | DOOR SWEEP(S) | 770S V x LAR | MIL | HAGER | | |
| SET 30<br><br>Doors: C104 | 3 | HINGE(S) | BB1279 4 1/2 X 4 1/2 | US26D | HAGER | | |
| | 1 | LOCKSET | 3870 SECT CHA SFIC | US26D | HAGER | | |
| | 1 | CYLINDER CORE | 3969-C | US26D | HAGER | | |
| | 1 | WALL STOP(S) | 232W | US32D | HAGER | | |
| | 3 | SILENCER | BY FRAME MFR. | - | BYOT | | |
| SET 31<br><br>Doors: C206 | 3 | HINGE(S) | BB1279 4 1/2 X 4 1/2 | US26D | HAGER | | |
| | 1 | LOCKSET | 3850 SECT CHA SFIC | US26D | HAGER | | |
| | 1 | CYLINDER CORE | 3969-C | US26D | HAGER | | |
| | 1 | CLOSER | 5100 | ALM | HAGER | | |
| | 1 | KICK PLATE(S) | 190S 10" x 2" LDW | US32D | HAGER | | |
| | 1 | WALL STOP(S) | 232W | US32D | HAGER | | |
| | 1 | SADDLE THRESHOLD | 412S x LAR | MIL | HAGER | | |
| | 1 | SEAL | 726 x LAR | S | HAGER | | |
| | 1 | DOOR BOTTOM | 780S N x LAR | MIL | HAGER | | |

## HARDWARE SCHEDULE

| HARDWARE SET | QTY. | ITEM | ID NO. | FINISH | MANUFACTURER | NOTES | GENERAL NOTE |
|---|---|---|---|---|---|---|---|
| SET 32<br><br>Doors: C103, C105, C106, C120, C121, C122, C123 | 3 | HINGE(S) | BB1279 4 1/2 X 4 1/2 | US26D | HAGER | | |
| | 1 | LOCKSET | 3850 SECT CHA SFIC | US26D | HAGER | | |
| | 1 | CYLINDER CORE | 3969-C | US26D | HAGER | | |
| | 1 | WALL STOP(S) | 236W | US32D | HAGER | | |
| SET 33<br><br>Doors: 1T-1, 1T-2, 1T-3, 1T-4, 2T-1, 2T-2, 2T-3, 2T-4 | 3 | HINGE(S) | BB1168 4 1/2 X 4 1/2 | US26D | HAGER | | |
| | 1 | PASSAGE SET | 3810 SECT CHA | US26D | HAGER | | |
| | 1 | CLOSER | 5100 | ALM | HAGER | | |
| | 1 | KICK PLATE(S) | 190S 10" x 2" LDW | US32D | HAGER | | |
| | 1 | MOP PLATE | 190S 4" x 1" LDW | US32D | HAGER | | |
| | 1 | WALL STOP(S) | 232W | US32D | HAGER | | |
| | 1 | SEAL | 726 x LAR | S | HAGER | | |
| | 1 | AUTO. DOOR BOTTOM | 742S V x LAR | MIL | HAGER | | |
| SET 34<br><br>Doors: C203 | 3 | HINGE(S) | BB1168 4 1/2 X 4 1/2 | US26D | HAGER | | |
| | 1 | PASSAGE SET | 3810 SECT CHA | US26D | HAGER | | |
| | 1 | CLOSER | 5200 | ALM | HAGER | | |
| | 1 | KICK PLATE(S) | 190S 10" x 2" LDW | US32D | HAGER | | |
| | 1 | WALL STOP(S) | 232W | US32D | HAGER | | |
| | 3 | SILENCER | BY FRAME MFR. | - | BYOT | | |
| SET 35<br><br>Doors: C1001, C114, C2001, C201A | 2 | CONTINUOUS HINGE | 780-112HD X LAR X RBCC | CLR | HAGER | | |
| | 1 | AUTO-RELEASE FLUSH BLT. | MS2180-07 | 130 | ADAMS RITE | | |
| | 1 | DEADLOCK | MS1850S | 628 | ADAMS RITE | | |
| | 2 | MORTISE CYLINDER | 3902 SFIC X LAR | US26D | HAGER | | |
| | 2 | CYLINDER CORE | 3969-C | US26D | HAGER | | |
| | 2 | PUSH/PULL SET | H 159D | US32D | HAGER | | |
| | 2 | CLOSER | 5100 HDCS | ALM | HAGER | | |
| | 1 | THRESHOLD | 413S X LAR | MIL | HAGER | | |
| | 1 | GASKETING | PERIM. GSKTS. BY FRM. MFR. | - | BYOT | | |
| | 1 | MEETING STILES | GASKETS BY DOOR MFR. | - | BYOT | | |
| | 2 | DOOR SWEEP(S) | 750S N X LAR | CLR | HAGER | | |
| SET 36<br><br>Doors: C202A | 2 | CONTINUOUS HINGE | 780-112HD X LAR X RBCC | CLR | HAGER | | |
| | 1 | AUTO-RELEASE FLUSH BLT. | MS2180-07 | 130 | ADAMS RITE | | |
| | 1 | DEADLOCK | MS1850S | 628 | ADAMS RITE | | |
| | 2 | MORTISE CYLINDER | 3902 SFIC X LAR | US26D | HAGER | | |
| | 2 | CYLINDER CORE | 3969-C | US26D | HAGER | | |
| | 2 | PUSH/PULL SET | H 159D | US32D | HAGER | | |
| | 2 | CLOSER | 5200 TRK NHOTA | ALM | HAGER | | |
| | 1 | GASKETING | PERIM. GSKTS. BY FRM. MFR. | - | BYOT | | |
| | 1 | MEETING STILES | GASKETS BY DOOR MFR. | - | BYOT | | |
| SET 37<br><br>Doors: G101B, G201B, G301B, G401B, GC01B | 2 | CONTINUOUS HINGE | 780-112HD X LAR X RBCC | CLR | HAGER | | |
| | 2 | PUSH/PULL SET | H 159D | US32D | HAGER | | |
| | 2 | CLOSER | 5100 TRK NHOTA | ALM | HAGER | | |
| | 1 | THRESHOLD | 413S X LAR | MIL | HAGER | | |
| | 1 | GASKETING | PERIM. GSKTS. BY FRM. MFR. | - | BYOT | | |
| | 1 | MEETING STILES | GASKETS BY DOOR MFR. | - | BYOT | | |
| | 2 | DOOR SWEEP(S) | 750S N X LAR | CLR | HAGER | | |
| SET 38<br><br>Doors: C101B | 2 | CONTINUOUS HINGE | 780-112HD X LAR X RBCC | CLR | HAGER | | |
| | 2 | PUSH/PULL SET | H 159D | US32D | HAGER | | |
| | 2 | CLOSER | 5100 HDCS | ALM | HAGER | | |
| | 1 | GASKETING | PERIM. GSKTS. BY FRM. MFR. | - | BYOT | | |
| | 1 | MEETING STILES | GASKETS BY DOOR MFR. | - | BYOT | | |
| SET 39<br><br>Doors: G101A | 6 | HINGE(S) | BB1168 4 1/2 X 4 1/2 | US26D | HAGER | | |
| | 2 | PUSH PLATE | 30S 4 X 16 | US32D | HAGER | | |
| | 2 | DOOR PULL | H 34J 4 X 16 | US32D | HAGER | | |
| | 2 | CLOSER | 5100 HDCS | ALM | HAGER | | |
| | 1 | GASKETING | PERIM. GSKTS. BY FRM. MFR. | - | BYOT | | |
| | 2 | MEETING STILES | 872S N X LAR | CLR | HAGER | | |
| SET 40<br><br>Doors: G201A, G301A, G401A, GC01A | 6 | HINGE(S) | BB1168 4 1/2 X 4 1/2 | US26D | HAGER | | |
| | 2 | PUSH PLATE | 30S 4 X 16 | US32D | HAGER | | |
| | 2 | DOOR PULL | H 34J 4 X 16 | US32D | HAGER | | |
| | 2 | CLOSER | 5100 | ALM | HAGER | | |
| | 2 | WALL STOP(S) | 232W | US32D | HAGER | | |
| | 1 | GASKETING | PERIM. GSKTS. BY FRM. MFR | - | BYOT | | |
| | 2 | MEETING STILES | 872S N X LAR | CLR | HAGER | | |
| SET 41<br><br>Doors: G102B, G202B, G302B, G402B, GC02B | 1 | CONTINUOUS HINGE | 780-112HD x LAR x RBCC | CLR | HAGER | | |
| | 1 | PUSH/PULL SET | H 159D | US32D | HAGER | | |
| | 1 | CLOSER | 5100 HDCS | ALM | HAGER | | |
| | 1 | THRESHOLD | 413S x LAR | MIL | HAGER | | |
| | 1 | GASKETING | PERIM. GSKTS. BY FRM. MFR. | - | BYOT | | |
| | 1 | DOOR SWEEP(S) | 750S N x LAR | CLR | HAGER | | |
| SET 42<br><br>Doors: G102A, G202A, G302A, G402A | 3 | HINGE(S) | BB1168 4 1/2 X 4 1/2 | US26D | HAGER | | |
| | 1 | PUSH PLATE | 30S 4 X 16 | US32D | HAGER | | |
| | 1 | DOOR PULL | H 34J 4 X 16 | US32D | HAGER | | |
| | 1 | CLOSER | 5100 HD | ALM | HAGER | | |
| | 1 | KICK PLATE(S) | 190S 10" x 2" LDW | US32D | HAGER | | |
| | 1 | WALL STOP(S) | 232W | US32D | HAGER | | |
| | 3 | SILENCER | BY FRAME MFR. | - | BYOT | | |
| SET 43<br><br>Doors: C115, C116, C204, C205 | 3 | HINGE(S) | BB1168 4 1/2 X 4 1/2 | US26D | HAGER | | |
| | 1 | PUSH PLATE | 30S 4 X 16 | US32D | HAGER | | |
| | 1 | DOOR PULL | H 34J 4 X 16 | US32D | HAGER | | |
| | 1 | CLOSER | 5100 | ALM | HAGER | | |
| | 1 | KICK PLATE(S) | 190S 10" x 2" LDW | US32D | HAGER | | |
| | 1 | MOP PLATE | 190S 4" x 1" LDW | US32D | HAGER | | |
| | 1 | WALL STOP(S) | 232W | US32D | HAGER | | |
| | 3 | SILENCER | BY FRAME MFR. | - | BYOT | | |
| SET 44 - UNIT ENTRY<br><br>Doors: 01 | 3 | SPRING HINGE(S) | 1754 4 X 4 | US26D | HAGER | - | |
| | 2 | PASSAGE SET | 154HFL SQT | US15 | KWIKSET | RE-KEYABLE CYLINDER | |
| | 2 | DEAD LOCK | 158 SQT SMT GMK | US15 | KWIKSET | - | |
| | 1 | KICK PLATE | K1050 8 X 34 HVBEV CSK | US32D | ROCKWOOD | - | |
| | 1 | WALL DOOR STOP | 409 | US32D | ROCKWOOD | - | |
| | 1 | GASKETING | S44BL17 | BL | PEMKO | - | |
| | 1 | DOOR VIEWER(S) | 620<br>*Two viewers at accessible unit | CRM | ROCKWOOD | - | |
| | 1 | DOOR GUARD | 604 | US26D | ROCKWOOD | - | |
| SET 45 - MECH.<br><br>Doors: 05 | 3 | HINGE(S) | BB1191 4 1/2 X 4 1/2 NRP | US32D | HAGER | | |
| | 1 | LOCKSET | 3880 SECT CHA SFIC | US26D | HAGER | | |
| | 1 | CY

# ANSI 2017 REFERENCE

**This sheet is one of two sheets of specifications.**
Information contained on sheets A10.01 through A10.04 are intended to provide detailed technical provisions for features within a space. Scope requirements to determine units which must comply with the specifications herein are referenced elsewhere in the construction documents.

302 Floor Surfaces. (See Figure # 302 & 303 on sheet A10.05)

302.1 General. Floor surfaces shall be stable, firm, and slip resistant, and shall comply with Section 302. Changes in level in floor surfaces shall comply with Section 303.
302.2 Carpet. Carpet or carpet tile shall be securely attached and shall have a firm cushion, pad, or backing or no cushion or pad. Carpet or carpet tile shall have a level loop, textured loop, level cut pile, or level cut/uncut pile texture. The pile shall be 1/2 inch maximum in height. Exposed edges of carpet shall be fastened to the floor and shall have trim along the entire length of the exposed edge. Carpet edge trim shall comply with Section 303.
302.3 Openings. Openings in floor surfaces shall be of a size that does not permit the passage of a 1/2 inch diameter sphere, except as allowed in Sections 407.4.3, 408.4.2, 409.4.3, 410.4 and 805.10. Elongated openings shall be placed so that the long dimension is perpendicular to the predominant direction of travel.

303 Changes in Level.

303.1 General. Changes in level in floor surfaces shall comply with Section 303
303.2 Vertical. Changes in level of 1/4 inch maximum in height shall be permitted to be vertical.
303.3 Beveled. Changes in level greater than 1/4 inch in height and not more than 1/2 inch maximum in height shall be beveled with a slope not steeper than 1:2.
303.4 Ramps. Changes in level greater than 1/2 inch in height shall be by a ramp complying with Section 405 or by a curb ramp complying with Section 406.

304 Turning Space. (See Figure # 304 on sheet A10.05)

304.1 General. A turning space shall comply with Section 304.
304.2 Floor Surface. Floor surfaces of a turning space shall comply with Section 302. Changes in level shall not be permitted within the turning space.
Exception: Slopes not steeper than 1:48 shall be permitted.
304.3 Size. Turning spaces shall comply with Section 304.3.1 or 304.3.2
304.3.1 Circular Space.
304.3.1.1 New buildings and facilities. In new buildings and facilities, the turning space shall be a circular space with a 67-inch minimum diameter.
304.3.1.1.1 Overlap. Turning spaces shall be permitted to include knee and toe clearance complying with Section 306. Where the turning space includes knee and toe clearances under an obstruction, the overlap shall comply with all of the following.
1. The depth of the overlap shall not be more than 10 inches, and
2. The depth shall not exceed the depth of the knee and toe clearances provided, and
3. The overlap shall be permitted only within the turning circle area shown in Figure 304.3.1.
304.3.1.2 Existing buildings and facilities. In existing buildings and facilities, the turning space shall be a circular space with a 60-inch minimum diameter.
304.3.1.2.1 Overlap. Turning spaces shall be permitted to include knee and toe clearance complying with Section 306.
304.3.2 T-Shaped Space.
304.3.2.1 New buildings and facilities. In new buildings and facilities, the turning space shall be a T-shaped space complying with one of the following:
1. A T-shaped space, clear of obstruction, that fits within an area 68 inches wide and 60 inches deep, with two arms and one base that are all 36 inches minimum in width. Each arm shall extend 16 inches minimum from each side of the base located opposite the other, and the base shall extend 24 inches minimum from the arms. At the intersection of each arm and the base, the interior corners shall be chamfered for 8 inches minimum along both the arm and along the base.
2. A T-shaped space, clear of obstruction, that fits within an area 64 inches wide and 60 inches deep, with two arms 38 inches minimum in width and a base 42 inches minimum in width. Each arm shall extend 11 inches minimum from each side of the base, located opposite the other, and the base shall extend 22 inches minimum from each arm.
3. A T-shaped space, clear of obstruction, 64 inches wide and 60 inches deep, with two arms and one base 40 inches minimum in width. Each arm shall extend 12 inches minimum from each side of the base and the base shall extend 20 inches minimum from each arm.
304.3.2.1.1 Overlap. Turning spaces shall be permitted to include knee and toe clearance complying with Section 306 of either the base or one arm. For Option 1, the base or arm is the portion beyond the chamfer.
304.3.2.2 Existing buildings and facilities. In existing buildings and facilities, the turning space shall be a T-shaped space within a 60-inch minimum square, with arms and base 36 inches minimum in width. Each arm of the T shall be clear of obstructions 12 inches minimum in each direction, and the base shall be clear of obstructions 24 inches minimum.
304.3.2.2.1 Overlap. Turning spaces shall be permitted to include knee and toe clearance complying with Section 306 only at the end of either the base or one arm.
304.4 Door Swing. Unless otherwise specified, doors shall be permitted to swing into turning spaces.

305 Clear Floor Space. (See Figure # 305 on sheet A10.05)

305.1 General. A clear floor space shall comply with Section 305.
305.2 Floor Surfaces. Floor surfaces of a clear floor space shall have a slope not steeper than 1:48 and shall comply with Section 302. Changes in level shall not be permitted within the clear floor space.
305.3 Size. The clear floor space shall be 48 inches minimum in length and 30 inches minimum in width.
305.3.1 New buildings and facilities. In new buildings and facilities, the clear floor space shall be 52 inches minimum in length and 30 inches minimum in width.
305.3.2 Existing buildings and facilities. In existing buildings and facilities, the clear floor space shall be 48 inches minimum in length and 30 inches minimum in width.
305.4 Knee and Toe Clearance. Unless otherwise specified, clear floor space shall be permitted to include knee and toe clearance complying with Section 306.
305.5 Position. Unless otherwise specified, the clear floor space shall be positioned for either forward or parallel approach to an element.
305.6 Approach. One full, unobstructed side of the clear floor space shall adjoin or overlap an accessible route or adjoin another clear floor space.
305.7 Alcoves. If a clear floor space is in an alcove or otherwise confined on all or part of three sides, additional maneuvering clearances complying with Sections 305.7.1 and 305.7.2 shall be provided, as applicable.
305.7.1 Parallel Approach. Where the clear floor space is positioned for a parallel approach, the alcove shall be 60 inches minimum in width where the depth exceeds 15 inches.
305.7.2 Forward Approach. Where the clear floor space is positioned for a forward approach, the alcove shall be 36 inches minimum in width where the depth exceeds 24 inches.

306 Knee and Toe Clearance. (See Figure # 306 on sheet A10.05)

306.1 General. Where space beneath an element is included as part of clear floor space at an element, clearance at an element, or a turning space, the space shall comply with Section 306. Additional space beyond knee and toe clearance shall be permitted beneath elements.
306.2 Toe Clearance. (See Figure #306 on sheet A10.05)
306.2.1 General. Space beneath an element between the floor and 9 inches above the floor shall be considered toe clearance and shall comply with Section 306.2.
306.2.2 Maximum Depth. Toe clearance shall be permitted to extend 25 inches maximum under an element.
306.2.3 Minimum Depth. Where toe clearance is required at an element as part of a clear floor space, the toe clearance shall extend 17 inches minimum beneath the element.
306.2.4 Additional Clearance. Space extending greater than 6 inches beyond the available knee clearance at 9 inches above the floor shall not be considered toe clearance.
306.2.5 Width. Toe clearance shall be 30 inches minimum in width.

306.3 Knee Clearance.

306.3.1 General. Space beneath an element between 9 inches and 27 inches above the floor shall be considered knee clearance and shall comply with Section 306.3.
306.3.2 Maximum Depth. Knee clearance shall be permitted to extend 25 inches maximum under an element at 9 inches above the floor.
306.3.3 Minimum Depth. Where knee clearance is required beneath an element as part of a clear floor space complying with Section 305, the knee clearance shall be 11 inches minimum in depth at 9 inches above the floor, and 8 inches minimum in depth at 27 inches above the floor.
306.3.4 Clearance Reduction. Between 9 inches and 27 inches above the floor, the knee clearance shall be permitted to be reduced at a rate of 1 inch for each 6 inches in height.
306.3.5 Width. Knee clearance shall be 30 inches minimum in width

307 Protruding Objects. (See Figure # 307.2 - 307.4 on sheet A10.05)

307.1 General. Protruding objects on circulation paths shall comply with Section 307.
307.2 Protrusion limits. Objects with leading edges more than 27 inches and not more than 80 inches above the floor shall protrude 4 inches maximum horizontally into a circulation path.
307.3 Post-mounted objects. Objects on posts or pylons shall be permitted to overhang 4 inches maximum where more than 27 inches and not more than 80 inches above the floor. Objects on multiple posts or pylons where the clear distance between posts or pylons is greater than 12 inches shall have the lowest edge of such object either 27 inches maximum or 80 inches minimum above the floor.
307.4 Vertical clearance. Vertical clearance shall be 80 inches minimum. Rails or other barriers shall be provided where the vertical clearance is less than 80 inches. The leading edge of such rails or barrier shall be located 27 inches maximum above the floor.
307.5 Required clear width. Protruding objects shall not reduce the clear width required for accessible routes.

308 Reach Ranges. (See Figure # 308.3 on sheet A10.05)

308.1 General. Reach ranges shall comply with Section 308.
308.2 Forward Reach.
308.2.1 Unobstructed. Where a forward reach is unobstructed, the high forward reach shall be 48 inches maximum and the low forward reach shall be 15 inches minimum above the floor.
308.2.2 Obstructed High Reach. Where a high forward reach is over an obstruction, the clear floor space complying with Section 305 and knee and toe clearance complying with Section 306 shall extend beneath the element for a distance not less than the required reach depth over the obstruction. The high forward reach shall be 48 inches maximum where the reach depth is 20 inches maximum. Where the reach depth exceeds 20 inches, the high forward reach shall be 44 inches maximum, and the reach depth shall be 25 inches maximum.
308.3 Side Reach. (See Figure #308.3 on sheet A10.05)
308.3.1 Unobstructed. Where a clear floor space allows a parallel approach to an element and the side reach is unobstructed, the high side reach shall be 48 inches maximum and the low side reach shall be 15 inches minimum above the floor.
Exceptions:
1. Existing elements that are not altered shall be permitted at 54 inches (1370 mm) maximum above the floor.
2. Operable parts on fuel dispensers installed on existing curbs shall be permitted at 54 inches (1370 mm) maximum above the floor.
308.3.2 Obstructed High Reach. Where a clear floor space complying with Section 305 allows a parallel approach to an object and the high side reach is over an obstruction, the height of the obstruction shall be 34 inches maximum and the depth of the obstruction shall be 24 inches maximum. The high side reach shall be 48 inches maximum for a reach depth of 10 inches maximum. Where the reach depth exceeds 10 inches, the high side reach shall be 46 inches maximum for a reach depth of 24 inches maximum.

309 Operable Parts. (See Figure # 309.1 on sheet A10.05)

309.1 General. Operable parts required to be accessible shall comply with Section 309.
309.2 Clear Floor Space. A clear floor space complying with Section 305 shall be provided.
309.3 Height. Operable parts shall be placed within one or more of the reach ranges specified in Section 308.
309.4 Operation. Operable parts shall be operable with one hand and shall not require tight grasping, pinching, or twisting of the wrist. The force required to activate operable parts shall be 5.0 pounds maximum.

401 General.

401.1 Scope. Accesible routes required by the scoping provisions adopted by the administrative authority shall comply with the applicable provisions of Chapter 4.

402 Accessible Routes

402.1 General. Accessible routes shall comply with Section 402.
402.2 Components. Accessible routes shall consist of one or more of the following components: walking surfaces with a running slope not steeper than 1:20, doors and doorways, gates, ramps, curb ramps excluding the flared sides, blended transitions, elevators and platform lifts. All components of an accessible route shall comply with the applicable portions of this standard

403 Walking Surfaces (See Figure # 403.5.1 - 403.5.3 on sheet A10.05)

403.1 General. Walking surfaces that are a part of an accessible route shall comply with Section 403.
403.2 Floor Surface. Floor surfaces shall comply with Section 302.
403.3 Slope. The running slope of walking surfaces shall not be steeper than 1:20. The cross slope of a walking surface shall not be steeper than 1:48
403.4 Changes in Level. Changes in level shall comply with Section 303.
403.5 Clear Width. The clear width of an accessible route shall comply with Section 403.5.1 403.5.2 403.5.3 or 403.5.4 as applicable.
403.5.1 General. The clear width of an interior accessible route shall be 36 inches minimum. The clear width of an exterior accessible route shall be 48 inches minimum.
Exceptions:
1. In new buildings and facilities, the clear width shall be permitted to be reduced to 32 inches minimum for a length of 24 inches maximm provided the reduced-width
2. In existing buildings and facilities, the clear width shall be permitted to be reduced to 32 inches minimum for a length of 24 inches maximum provided the reduced width segments are separated by segments that are 48 inches minimum in length and 36 inches minimum in width
3. The clear width of an exterior accessible route located within seating areas shall be 36 inches minimum
4. The clear width of an exterior ramp shall comply with Section 405.5
403.5.2 Clear width at 180-degree turn.
403.5.2.1 New buildings and facilities. In new building and facilities, where an accessible route makes a 180-degree turn around an object that is equal to or greater than 52 inches in width, the clear widths in the turn shall comply with Section 403.5.3.1. Where an accessible route makes a 180-degree turn around an object that is less than 52 inches in width, the clear widths approaching the turn, during the turn and leaving the turn, shall be one of the following sets of dimensions:
1. Approaching width is 36 inches minimum, during width is 60 inches minimum, and leaving width is 36 inches minimum.
2. Approaching width is 42 inches minimum, during width is 48 inches minimum, and leaving width is 42 inches minimum.
3. Approaching width is 43 inches minimum, during width is 43 inches minimum, and leaving width is 43 inches minimum.
403.5.2.2 Existing buildings and facilities. In existing buildings and facilities, where an accessible route makes a 180 degree turn around an object that is less than 48 inches in width, clear width shall be 42 inches minimum approaching the turn, 48 inches minimum during the turn, and 42 inches minimum leaving the turn.
Exception: This section shall not apply where the clear width during the turn is 60 inches minimum.
403.5.3 Clear width at 90-degree turn.
403.5.3.1 New buildings and facilities. In new buildings and facilities, where an accessible route makes a 90-degree turn the clear widths approaching the turn and leaving the turn shall be one of the following sets of dimensions:
1. Both legs of the turn shall be 40 inches minimum in width. The width of each leg of the turn shall be maintained for 28 inches minimum from the inner corner.
2. Where the interior corners of the turn are chamfered for 8 inches minimum along both walls, both legs of the turn shall be 36 inches minimum in width.
3. Where one leg of the turn is 42 inches minimum in width, the other shall be permitted to be 38 inches minimum in width.
4. Where one leg of the turn is 44 inches minimum in width, the other shall be permitted to be 36 inches minimum in width.
Exceptions:
1. Where an accessible route makes a 90-degree turn at doors, doorways and gates complying with Section 404.2.3, the route shall not be required to comply with this section.
2. Where an accessible route makes a 90-degree turn at an elevator or platform lift complying with Sections 407 through 410, the accessible route shall not be required to comply with this section.
403.5.3.2 Existing buildings and facilities. In existing buildings and facilities, where an accessible route makes a 90-degree turn the clear widths approaching the turn and leaving the turn shall be 36 inches minimum.
403.5.4 Passing space.
403.5.4.1 New buildings and facilities. In new buildings and facilities, an accessible route with a clear width less than 60 inches shall provide passing spaces at intervals of 200 feet maximum. Passing spaces shall be either a 60-inch minimum by 60-inch minimum space, or an intersection of two walking surfaces that provide a T-shaped turning space complying with Section 304.3.2.1, provided the base and arms of the T-shaped space extend 52 inches minimum beyond the intersection.
403.5.4.2 Existing buildings and facilities. In existing buildings and facilities, an accessible route with a clear width less than 60 inches shall provide passing spaces at intervals of 200 feet maximum. Passing spaces shall be either a 60-inch minimum by 60-inch minimum space, or an intersection of two walking surfaces that provide a T-shaped turning space complying with Section 304.3.2, provided the base and arms of the T-shaped space extend 48 inches minimum beyond the intersection.
403.6 Handrails. Where handrails are required at the side of a corridor they shall comply with Sections 505.4 through 505.9.

404 Doors and Doorways. (See Figure # 404 on sheet A10.06)

404.1 General. Doors and doorways that are part of an accessible route shall comply with Section 404.
Exception: Doors, doorways and gates designed to be operated only by security personal shall not be required to comply with Sections 404.2.3, 404.2.6, 404.2.7, 404.2.8, 404.3.1, 404.3.2, 404.3.4, 404.3.7 and 404.3.8.
404.2 Manual doors, doorways and manual gates. Manual doors, doorways and manual gates intended for user passage shall comply with Section 404.2.
404.2.1 Double-Leaf Doors and Gates. At least one of the active leaves of doorways with two leaves shall comply with Sections 404.2.2 and 404.2.3.
404.2.2 Clear Width. Doorways shall have a clear opening width of 32 inches minimum. Clear opening width of doorways with swinging doors shall be measured between the face of door and stop, with the door open 90 degrees. Openings, doors and doorways without doors more than 24 inches in depth shall provide a clear opening width of 36 inches minimum. There shall be no projections into the clear opening width lower than 34 inches above the floor. Projections into the clear opening width between 34 inches and 80 inches above the floor shall not exceed 4 inches.
404.2.3 Maneuvering Clearances. Minimum maneuvering clearances at doors and gates shall comply with Section 404.2.3. Maneuvering clearances shall include the full clear opening width of the doorway and the required latch-side or hinge-side clearance.
404.2.3.1 Floor surface. The floor surface within the maneuvering clearances shall have a slope not steeper than 1:48 and shall comply with Section 302.
404.2.3.2 Swinging doors and gates. Swinging doors and gates shall have maneuvering clearances complying with Table 404.2.3.2.
404.2.3.3 Sliding and folding doors. Sliding doors and folding doors shall have maneuvering clearances complying with Table 404.2.3.3.
404.2.3.4 Doorways without doors or gates. Doorways without doors or gates that are less than 36 inches in width shall have maneuvering clearances complying with Table 404.2.3.4
404.2.3.5 Recessed doors and gates. Where any obstruction within 18 inches of the latch side of a doorway projects more than 8 inches beyond the face of the door or gate, measured perpendicular to the face of the door or gate, maneuvering clearances for a forward approach shall be provided.
404.2.4 Thresholds. If provided, thresholds at doorways shall be 1/2 inch maximum in height. Raised thresholds and changes in level at doorways shall comply with Sections 302 and 303.
Exception: An existing or altered threshold shall be permitted to be 3/4 inch maximum height provided that the threshold has a beveled edge on each side with a maximum slope of 1:2 for the height exceeding 1/4 inch.
404.2.5 Two Doors or gates in a series. Distance between two hinged or pivoted doors in series shall be 48 inches minimum plus the width of any door swinging into the space. The space between the doors shall provide a turning space complying with Section 304.
404.2.6 Door and gate hardware. Handles, pulls, latches, locks, and other operable parts on accessible doors and gates shall have a shape that is easy to grasp with one hand and does not require tight grasping, pinching, or twisting of the wrist to operate. The operational force to retract latches or disengage devices that hold the door or gate in a closed position shall be as follows:
1. Hardware operation by a forward, pushing or pulling motion: 15 pounds maximum.
2. Hardware operation by a rotational motion: 28 inch-pounds maximum.
404.2.6.1 Hardware height. Operable parts of such hardware shall be 34 inches minimum and 48 inches maximum above the floor. Where sliding doors are in a fully open position, operating hardware shall be exposed and usable from both sides.
404.2.7 Closing Speed. Door and gate closing speed shall comply with 404.2.7.
404.2.7.1 Door and gate closers. Door and gate closers shall be adjusted so that from an open position of 90 degrees, the time required to move the door to an open position of 12 degrees shall be 5 seconds minimum.
404.2.7.2 Spring Hinges. Door spring hinges shall be adjusted so that from the open position of 70 degrees, the door shall move to the closed position in 1.5 seconds minimum.
404.2.8 Door and gate opening force. Fire doors and doors or gates required to be equipped with panic hardware, break away features or other factors requiring higher opening force for safety reasons shall have the minimum opening force allowable in scoping provisions adopted by the appropriate administrative authority. For other doors or gates, the force for pushing or pulling open doors or gates shall be as follows:
1. Interior hinged door: 5.0 pounds maximum
2. Sliding or folding door: 5.0 pounds maximum
Exception: The force required to retrach latch bolts or disengage other devices that hold the door or gate in a closed position shall not apply to panic hardware, delayed egress devices or fire-rated hardware.
These forces do not apply to the force required to retract latch bolts or disengage other devices that hold the door in a closed position.
404.2.9 Door and gate surface. Door and gate surfaces within 10 inches of the floor - ***12 inches per FHA***, measured vertically, shall be a smooth surface on the push side extending the full width of the door. Parts creating horizontal or vertical joints in such surface shall be within 1/16 inch of the same plane as the other. Cavities created by added kick plates shall be capped.
EXCEPTIONS:
1. Sliding doors.
2. Tempered glass doors without stiles and having a bottom rail or shoe with the top leading edge tapered at no less than 60 degrees from the horizontal shall not be required to meet the 10 inch bottom rail height requirement.
3. Doors that do not extend to within 10 inches of the floor.
4. The installation of kick plates on existing doors and gates without a smooth surface within 10 inches of the floor shall be permitted. The kick plates shall extend to 10 inches above the floor and no more than 1 inch from the sides and bottom of the door. Cavities created by such kickplates shall be capped.
404.2.10 Vision Lites. Doors and sidelites adjacent to doors containing one or more glazing panels that permit viewing through the panels shall have the bottom of at least one panel on either the door or an adjacent sidelite 43 inches maximum above the floor.
Exception: Vision lites with the lowest part more than 66 inches above the floor shall not be required to comply with this section.
404.3 Automatic and power-assisted doors and gates. Automatic doors and gates shall comply with Section 404.3. Full powered automatic doors and gates shall comply with ANSI/BHMAA156.10 listed in Section 106.2.7. Power-assist doors and gates and low-energy automatic doors and gates shall comply with ANSI/BHMAA156.19 listed in Section 106.2.6.
404.3.1 Public Entrances. Where an automatic door or gate is required at a building or facility public entrance, it shall be a full powered automatic or a low-energy automatic door or gate.
404.3.2 Vestibules. Where an entrance includes a vestibule, at least one exterior door or gate and one interior door or gate in the vestibule shall have the same type of automatic door or gate opener.
404.3.3 Clear width. Doorways shall have a clear opening width of 32 inches in power-on and power-off mode. The minimum clear opening width for automatic door systems shall be based on the clear opening width provided with all leafs in the open position.
404.3.4 Maneuvering clearances. Manuevering clearances at power assisted doors and gates shall comply with Section 404.2.3. Maneuvering clearances complying with Section 404.2.3 shall be provided on the egress side of low-energy automatic and full power automatic doors and gates that serve as part of an accessible means of egress.
Exceptions:
1. Low-energy automatic and full power automatic doors and gates that have standby power or battery back-up shall not be required to comply with this section.
2. Low-energy automatic and full power automatic doors and gates that remain open in the poweroff condition shall not be required to comply with this section.
3. Full power automatic sliding doors and gates that include a break-away feature shall not be required to comply with this section.
404.3.5 Thresholds. Thresholds and changes in level at doorways shall comply with Section 404.2.4.
404.3.6 Two doors or gates in series. Doors or gates in series shall comply with Section 404.2.5.
Exception: Where both doors or gates in a series are low-energy automatic or full power automatic doors or gates, the two doors or gates in a series shall not be required to provide a turning space between the doors or gates.
404.3.7 Controls. Manually operated controls shall comply with Section 309. The clear floor space adjacent to the controls shall be located byond the arc of the door or gate swings.
404.3.8 Door and gate hardware. Handles, pulls, latches, locks and other perable parts shall comply with Section 404.2.6.
404.3.9 Break out opening. Where full power automatic sliding doors and gates are equipped with a break out feature, the clear break out opening shall be 32 inches minimum when operated in emergency mode.

405 Ramps

405.1 General. Ramps along accessible routes shall comply with Section 405.
Exception: In assembly areas, aisle ramps adjacent to seating and not serving elements required to be an accessible route shall not be required to comply with this section.
405.2 Slope. Ramp runs shall have a running slope greater than 1:20 and not steeper than 1:12.
Exception: In existing buildings or facilities, ramps shall be permitted to have slopes steeper than 1:12 complying with Table 405.2 where such slopes are necessary due to space limitations.
405.3 Cross Slope. Cross slope of ramp runs shall not be steeper than 1:48.
405.4 Floor surfaces. Floor surfaces of ramp runs shall comply with Section 302.
405.5 Clear width. The clear width of a ramp run shall be 36 inches minimum. Handrails and handrail supports that are provided on the ramp run shall not project into the required clear width of the ramp run.
Exception: Within employee work areas, the required clear width of ramps that are a part of common use circulation paths shall be permitted to be decreased by work area equipment provided that the decrease is essential to the function of the work being performed.
405.6 Rise. The rise for any ramp run shall be 30 inches maximum.
405.7 Landings. Ramps shall have landings at the bottom and top of each ramp run. Landings shall compyl with Section 405.7
405.7.1 Slope. Landings shall have a slope not steeper than 1:48 and shall comply with Section 302.
405.7.2 Width. Clear width of landings shall be at least as wide as the widest ramp run leading to the landing.
405.7.3 Length. Landings shall have a clear length of 60 inches minimum.
405.7.4 Change in direction. Ramps that change direction between runs at landings shall have a clear landing 60 inches minimum by 60 inches minimum.
405.7.5 Doorways. Where a door or gate is adjacent to a ramp landing, maneuvering clearances required by Sections 404.2.3 and 404.3.4 shall be permitted to overlap the landing area. Where a door or gate that is subject to locking is located adjacent to a ramp landing, the landing shall be sized to provide a turning space complying with Section 304.3.
405.8 Handrails. Ramp runs with a rise greater than 6 inches shall have handrails complying with Section 505.
Exception: Within employee work areas, handrails shall not be required where ramps that are part of common use circulation paths, and which are used for the movement of equipment, are designed to permit the installation of handrails complying with Section 505. Ramps not subject to the exception to Section 405.5 shall be designed to maintain a 36-inch minimum clear width where handrails are installed.
405.9 Edge protection. Edge protection complying with Section 405.9.1 or 405.9.2 shall be provided on each side of ramp runs and at each side of ramp landings.
Exceptions:
1. Edge protection shall not be required on ramps not required to have handrails and that have flared sides complying with Section 406.3.
2. Edge protection shall not be required on the sides of ramp landings serving an adjoining ramp run or stairway.
3. Edge protection shall not be required on the sides of ramp landing having a vertical drop-off of 1/2 inch maximum within 10 inches horizontally of the minimum landing area specified in Section 405.7.
4. Edge protection shall not be required on the sides of ramped aisles where the ramps provide access to the adjacent seats and aisle access ways.
405.9.1 Extended floor surface. The floor surface of ramp runs and ramp landings shall extend 12 inches minimum beyond the inside face of a railing complying with Section 505.
405.9.2 Curb or barrier. A curb complying with Section 405.9.2.1 or a barrier complying with Section 405.9.2.2 shall be provided.
405.9.2.1 Curb. A curb shall be a minimum of 4 inches in height.
405.9.2.2 Barrier. Barriers shall be constructed so that the barrier prevents the passage of a 4-inch diameter sphere where any portion of the sphere is within 4 inches of the floor.
405.10 Wet conditions. Landings subject to wet conditions shall be designed to prevent the accumulation of water.

Section 407 Elevators (See Figure # 407.2 & 407.4.1 on sheet A10.06)

407.1 General. Elevators shall comply with Section 407 and ASME A17.1/CSA B44 listed in Section 106.2.8. Elevators shall be passenger elevators as classified by ASME A17.1/ CSA B44. Elevator operation shall be automatic.
407.2 Elevator landing requirements. Elevator landings shall comply with Section 407.2.
407.2.1 Call controls. Where elevator call buttons or key pads are provided, they shall comply with Sections 407.2.1 and 309.4. Call buttons shall be raised or flush. Objects beneath hall call buttons shall protrude 1 inch (25 mm) maximum.
Exceptions:
1. Existing elevators shall be permitted to have recessed call buttons.
2. The restriction on objects beneath call buttons shall not apply to existing call buttons.
407.2.1.1 Height. Call buttons and keypads shall be located within one of the reach ranges specified in Section 308, measured to the centerline of the highest operable part.
Exception: Existing call buttons and existing keypads shall be permitted to be located 54 inches (1370 mm) maximum above the floor, measured to the centerline of the highest operable part.
407.2.1.2 Size. Call buttons shall be 3/4 inch (19 mm) minimum in the smallest dimension.
Exception: Existing elevator call buttons shall not be required to comply with this section.
407.2.1.3 Clear floor space. A clear floor space shall be provided at call controls.
407.2.1.4 Location. The call button that designates the up direction shall be located above the call button that designates the down direction.
Exception: Destination-oriented elevators shall not be required to comply with this section.
407.2.1.5 Signals. Call buttons shall have visible signals to indicate when each call is registered and when each call is answered. Call buttons shall provide an audible signal or mechanical motion of the button to indicate when each call is registered.
Exceptions:
1. Destination-oriented elevators shall not be required to comply with Section 407.2.1.5, provided a visible signal and audible tones and verbal announcements complying with this section are provided.
2. Existing elevators shall not be required to comply with Section 407.2.1.5.
407.2.1.6 Keypads. Where keypads are provided, keypads shall be in a standard telephone keypad arrange ment and shall comply with Section 407.4.7.2.
407.2.1.7 Destination-oriented elevator signals. Destination-oriented elevators shall be provided with a visible signal and audible tones and verbal announcements to indicate which car is responding to a call. The audible tone and verbal announcement shall be activated by pressing a function button. The function button shall be identified by the International Symbol for Accessibility and a raised indication. The International Symbol for Accessibility, complying with Section 703.6.3.1, shall be 5/8 inch (16 mm) in height and be a visual character complying with Section 703.2. The indication shall be three raised dots, spaced 1/4 inch (6.4 mm) at base diameter, in the form of an equilateral triangle. The function button shall be located immediately below the keypad arrangement or floor buttons.
407.2.2 Hall signals. Hall signals, including in-car signals, shall comply with Section 407.2.2.
407.2.2.1 Visible and audible signals. A visible and audible signal shall be provided at each hoistway entrance to indicate which car is answering a call and the car's direction of travel. Where in-car signals are provided they shall be visible from the floor area adjacent to the hall call buttons.
Exceptions:
1. Destination-oriented elevators shall not be required to comply with this section, provided a visible signal and audible tones and verbal announcements complying with Section 407.2.1.7 are provided.

**ADDITIONAL NOTES:**
- Accessible mirrors must have reflective surface beginning at 40" maximum above floor.
- Fire Alarm Pull stations to be 48" max to handle.

ALL REPORTS, PLANS, SPECIFICATIONS AND COMPUTER FILES RELATING TO THIS PROJECT ARE THE PROPERTY OF THE MARTIN ARCHITECTURAL GROUP. THE MARTIN ARCHITECTURAL GROUP RETAINS ALL COMMON LAW, STATUTE AND OTHER RESERVED RIGHTS INCLUDING THE COPYRIGHT THERETO. REPRODUCTION OF THE MATERIAL HEREIN OR SUBSTANTIAL USE WITHOUT WRITTEN PERMISSION OF THE MARTIN ARCHITECTURAL GROUP VIOLATES THE COPYRIGHT LAWS OF THE UNITED STATES AND WILL BE SUBJECT TO LEGAL PROSECUTION.
©2022, The Martin Architectural Group, P.C.

REGISTERED ARCHITECT PENNSYLVANIA DREW ROMANIC No. RA407676

THE MARTIN ARCHITECTURAL GROUP, P.C.
ARCHITECTS AND LAND PLANNERS
A PROFESSIONAL CORPORATION
240 NORTH 22ND STREET, PHILADELPHIA, PA, 19103
P (215) 665-1080 F (215) 561-5064

| | |
|---|---|
| P.A.: | DREW ROMANIC |
| P.M.: | JASON DECAMPLI |
| DRAWN BY: | MAG |
| PROJECT NO: | 1362-12 |

| NO. | REVISION | DATE |
|---|---|---|
| 1 | PERMIT SET | 12/20/22 |

ACCESSIBILITY INFORMATION
**Granite Run Apartment 02**
MIDDLETOWN TOWNSHIP, PA

| | |
|---|---|
| SCALE: | AS NOTED |
| DATE: | 12/31/2017 |

**A10.01**

©2022, The Martin Architectural Group, P.C.

Printed: 1/13/2023 4:53:37 PM

# ANSI 2017 REFERENCE

2. In existing elevators, a signal indicating the direction of car travel shall not be required.
407.2.2.2 Visible signals. Visible signal fixtures shall be centered at 72 inches (1830 mm) minimum above the floor. The visible signal elements shall be 21/2 inches (64 mm) minimum between the uppermost and lowest edges of the illuminated shape measured vertically. Signals shall be visible from the floor area adjacent to the hall call button.
Exceptions:
1. Destination-oriented elevators shall be permitted to have signals visible from the floor area adjacent to the hoistway entrance.
2. Existing elevators shall not be required to comply with this section 407.2.2.3 Audible signals. Audible signals shall sound once for the up direction and twice for the down direction, or shall have verbal annunciators that indicate the direction of elevator car travel. Audible signals shall have a frequency of 1500 Hz maximum. Verbal annunciators shall have a frequency of 300 Hz minimum and 3,000 Hz maximum. The audible signal or verbal annunciator shall be 10 dBA minimum above ambient, but shall not exceed 80 dBA, measured at the hall call button.
Exceptions:
1. Destination-oriented elevators shall not be required to comply with this section, provided the audible tone and verbal announcement is the same as those given at the call button or call button keypad.
2. The requirement for the frequency and range of audible signals shall not apply in existing elevators.
407.2.2.4 Differentiation. Each destination-oriented elevator in a bank of elevators shall have audible and visible means for differentiation.
407.2.3 Hoistway signs. Signs at elevator hoistways shall comply with Section 407.2.3.
407.2.3.1 Floor designation. Floor designations shall be provided in raised characters and braille complying with Sections 703.3 and 703.4. Raised characters shall be 2 inches (51 mm) minimum in height. Floor designations shall be located on both jambs of elevator hoist way entrances. A raised star shall be provided on both jambs at the main entry level.
07.2.3.2 Car identification. Destination-oriented elevators shall provide car identification in raised characters and braille complying with Sections 703.3 and 703.4. Raised characters shall be 2 inches (51 mm) minimum in height. Car identifications shall be located on both jambs of the hoistway immediately below the floor designation.
407.2.4 Destination signs. Where signs indicate that elevators do not serve all landings, signs in raised characters and braille complying with Sections 703.3 and 703.4 shall be provided above the hall call button or keypad.
Exception: Destination oriented elevator systems shall not be required to comply with this section.
407.3 Elevator door requirements. Hoistway and elevator car doors shall comply with Section 407.3.
407.3.1 Type. Elevator doors shall be horizontal sliding type. Car gates shall be prohibited.
407.3.2 Operation. Elevator hoistway and car doors shall open and close automatically.
Exception: Existing manually operated hoistway swing doors shall be permitted, provided the following criteria are met:
1. The hoistway doors comply with Sections 404.2.2 and 404.2.8;
2. The car door closing is not initiated until the hoistway door is closed.
407.3.3 Reopening device. Elevator doors shall be provided with a reopening device complying with Section
407.3.3 that shall stop and reopen a car door and hoistway door automatically if the door becomes obstructed by an object or person.
Exception: In existing elevators, manually operated doors shall not be required to comply with this section.
407.3.3.1 Height. The reopening device shall be activated by sensing an obstruction passing through the opening at 5 inches (125 mm) nominal and 29 inches (735 mm) nominal above the floor.
407.3.3.2 Contact. The reopening device shall not require physical contact to be activated, although contact shall be permitted before the door reverses.
407.3.3.3 Duration. The reopening device shall remain effective for 20 seconds minimum.
407.3.4 Door and signal timing. The minimum acceptable time from notification that a car is answering a call until the doors of that car start to close shall be calculated from the following equation:
T = D/(1.5 ft/s) or T = D/(455 mm/s) = 5 seconds minimum, where T equals the total time in seconds and D equals the distance (in feet or millimeters) from the point in the lobby or corridor 60 inches (1525 mm) directly in front of the farthest call button controlling that car to the centerline of its hoistway door.
Exceptions:
1. For cars with in-car lanterns, T shall be permitted to begin when the signal is visible from the point 60 inches (1525 mm) directly in front of the farthest hall call button and the audible signal is sounded.
2. Destination-oriented elevators shall not be required to comply with this section.
407.3.5 Door delay. Elevator doors shall remain fully open in response to a car call for 3 seconds minimum.
407.3.6 Width. Elevator door clear opening width shall comply with Table 407.4.1.
Exception: In existing elevators, a power-operated car door complying with Section 404.2.2 shall be permitted.
407.4 Elevator car requirements. Elevator cars shall comply with Section 407.4.
407.4.1 Inside dimensions. Inside dimensions of elevator cars shall comply with Table 407.4.1.
Exception: Existing elevator car configurations that provide a clear floor area of 16 square feet (1.5 m2) minimum, and provide a clear inside dimension of 36 inches (915 mm) minimum in width and 54 inches (1370 mm) minimum in depth, shall be permitted.
407.4.2 Floor surfaces. Floor surfaces in elevator cars shall comply with Section 302.
407.4.3 Platform to hoistway clearance. The clearance between the car platform sill and the edge of any hoistway landing shall comply with ASME A17.1/CSA B44 listed in Section 106.2.8.
407.4.4 Leveling. Each car shall automatically stop and maintain position at floor landings within a tolerance of 1/2 inch (13 mm) under rated loading to zero loading conditions.
407.4.5 Illumination. The level of illumination at the car controls, platform, car threshold and car landing sill shall comply with ASME A17.1/CSA B44 listed in Section 106.2.8.
407.4.6 Elevator car controls. Where provided, elevator car controls shall comply with Sections 407.4.6 and 309.
Exception: In existing elevators, where a new car operating panel complying with Section 407.4.6 is provided, existing car operating panels shall not be required to comply with Section 407.4.6.
407.4.6.1 Location. Controls shall be located within one of the reach ranges specified in Section 308.
Exceptions:
1. Where the elevator panel complies with Section 407.4.8.
2. In existing elevators, where a parallel approach is provided to the controls, car control buttons with floor designations shall be permitted to be located 54 inches (1370 mm) maximum above the floor. Where the panel is changed, it shall comply with Section 308.
407.4.6.2 Buttons. Car control buttons with floor designations shall be raised or flush, and shall comply with Section 407.4.6.2.
Exception: In existing elevators, buttons shall be permitted to be recessed.
407.4.6.2.1 Size. Buttons shall be 3/4 inch (19 mm) minimum in their smallest dimension.
407.4.6.2.2 Arrangement. Buttons shall be arranged with numbers in ascending order. When two or more columns of buttons are provided they shall read from left to right.
407.4.6.3 Keypads. Where provided, car control key pads shall be in a standard telephone keypad arrange ment and shall comply with Section 407.4.7.2.
407.4.6.4 Emergency controls. Emergency controls shall comply with Section 407.4.6.4.
407.4.6.4.1 Height. Emergency control buttons shall have their centerlines 35 inches (890 mm) minimum above the floor.
407.4.6.4.2 Location. Emergency controls, including the emergency alarm, shall be grouped at the bottom of the panel.
407.4.7 Designations and indicators of car controls. Designations and indicators of car controls shall comply with Section 407.4.7.
Exceptions:
1. In existing elevators, where a new car operating panel complying with Section 407.4.7 is provided, existing car operating panels shall not be required to comply with Section 407.4.7.
2. Where existing building floor designations differ from the arrangement required by Section 407.4.6.2.2, or are alphanumeric, a new operating panel shall be permitted to use such existing building floor designations.
407.4.7.1 Buttons. Car control buttons shall comply with Section 407.4.7.1.
407.4.7.1.1 Type. Control buttons shall be identified
by raised characters and braille complying with Sections 703.3 and 703.4.
407.4.7.1.2 Designation. Floors shall be designated . . . -4, -3, -2, -1, 0, 1, 2, 3, 4, etcetera, with floors below the main entry floor designated with minus numbers. Numbers shall be permitted to be omitted, provided the remaining numbers are in sequence. Where a telephone keypad arrangement is used, the number key ("#") shall be utilized to enter the minus symbol ("-"). Ancillary letters shall be permitted to be used in conjunction with the numbers, provided the letters are located to the right of the numbers and not more than two letters are used for each floor designation.
407.4.7.1.3 Location. Raised character and braille designations shall be placed immediately to the left of the control button to which the designations apply. Where a negative number is used to indicate a negative floor, the braille designation shall be a cell with the dots 3 and 6 followed by the ordinal number.
Exception: Where space on an existing car operating panel precludes raised characters and braille to the left of the control button, markings shall be placed as near to the control button as possible.
407.4.7.1.4 Symbols. The control button for the emergency stop, alarm, door open, door close, main entry floor, and phone, shall be identified with raised symbols and braille as shown in Table 407.4.7.1.4.

407.4.7.1.5 Visible indicators. Buttons with floor designations shall be provided with visible indicators to show that a call has been registered. The visible indication shall extinguish when the car arrives at the designated floor.
407.4.7.2 Keypads. Keypad keys shall be identified by visual characters complying with Section 703.2 centered on the corresponding keypad button. The number five key shall have a single raised dot. The dot shall have a base diameter of 0.118 inch (3 mm) minimum and 0.120 inch (3.05 mm) maximum, and a height of 0.025 inch (0.6 mm) minimum and 0.037 inch (0.9 mm) maximum.
407.4.8 Elevator car call sequential step scanning. Elevator car call sequential step scanning shall be provided where car control buttons are provided more than 48 inches (1220 mm) above the floor. Floor selection shall be accomplished by applying momentary or constant pressure to the up or down scan button. The up scan button shall sequentially select floors above the current floor. The down scan button shall sequentially select floors below the current floor. When pressure is removed from the up or down scan button for more than 2 seconds, the last floor selected shall be registered as a car call. The up and down scan button shall be located adjacent to or immediately above the emergency control buttons.
407.4.9 Car position indicators. Audible and visible car position indicators shall be provided in elevator cars.
407.4.9.1 Visible indicators. Visible indicators shall comply with Section 407.4.9.1.
407.4.9.1.1 Size. Characters shall be 5/8 inch (16 mm) minimum in height.
407.4.9.1.2 Location. Indicators shall be located above the car control panel or above the door.
407.4.9.1.3 Floor arrival. As the car passes a floor and when a car stops at a floor served by the elevator, the corresponding character shall illuminate.
Exception: Destination-oriented elevators shall not be required to comply with this section, provided the visible indicators extinguish when the call has been answered.
407.4.9.1.4 Destination indicator. In destinationoriented elevators, a display shall be provided in the car with visible indicators to show car destinations.
407.4.9.2 Audible indicators. Audible indicators shall comply with Section 407.4.9.2.
407.4.9.2.1 Signal type. The signal shall be an automatic verbal annunciator that announces the floor at which the car is about to stop. The verbal announcement indicating the floor shall be completed prior to the initiation of the door opening.
Exception: For elevators other than destinationoriented elevators that have a rated speed of 200 feet per minute (1 m/s) maximum, a non-verbal audible signal with a frequency of 1500 Hz maximum that sounds as the car passes or is about to stop at a floor served by the elevator shall be permitted.
407.4.9.2.2 Signal level. The verbal annunciator shall be 10 dBA minimum above ambient, but shall not exceed 80 dBA, measured at the annunciator.
407.4.9.2.3 Frequency. The verbal annunciator shall have a frequency of 300 Hz minimum and 3,000 Hz maximum.
407.4.10 Emergency communications. Emergency two way communication systems between an elevator car and a point outside the hoistway shall comply with Section 407.4.10 and ASME A17.1/CSA B44 listed in Section 106.2.8.
407.4.10.1 Height. The highest operable part of a two way communication system shall comply with Section 308.
407.4.10.2 Identification. Raised characters and braille complying with Sections 703.3 and 703.4 and raised symbols complying with Section 407.4.7.1.4 shall be provided adjacent to the device.
407.4.10.3 Instructions. Where instructions for use are provided, essential information shall be presented in visual form, raised characters and braille complying with Sections 603.2, 703.3 and 703.4.

603 Toilet and Bathing Rooms

603.1 General. Toilet and bathing rooms shall comply with Section 603.
603.2 Clearances.
603.2.1 Turning space. A turning space shall be provided within the room. The required turning space shall not be provided within a toilet compartment.
603.2.2 Door swing. Doors shall not swing into the clear floor space or clearance for any fixture.
Exceptions:
1. Doors to a toilet or bathing room for a single occupant, accessed only through a private office and not for common use or public use shall be permitted to swing into the clear floor space, provided the swing of the door can be reversed to comply with Section 603.2.2.
2. Where the room is for individual use and a clear floor space complying with Section 305.3 is provided within the room beyond the arc of the door swing, the door shall not be required to comply with Section 603.2.2.
603.3 Mirrors. Where mirrors are located above lavatories, a
mirror shall be located over the lavatory complying with Section 606 and shall be mounted with the bottom edge of the reflecting surface 40 inches (1015 mm) maximum above the
floor. Where mirrors are located above counters that do not contain lavatories, the mirror shall be mounted with the bottom edge of the reflecting surface 40 inches (1015 mm) max imum above the floor.
Exception: Other than within Accessible dwelling or sleeping units, mirrors shall not be required over the lavatories or counters if a mirror is located within the same toilet or bathing room and mounted with the bottom edge of the reflecting surface 35 inches (890 mm) maximum above the floor.
603.4 Coat hooks and shelves. Coat hooks shall be located within one of the reach ranges specified in Section 308. Shelves shall be 40 inches (1015 mm) minimum and 48 inches (1220 mm) maximum above the floor.
603.5 Diaper changing tables. Diaper changing tables shall comply with Sections 309 and 902
603.6 Operable parts. Operable parts on towel dispensers and hand dryers serving lavatories complying with Section 606 shall comply with Table 603.6.

604 Water Closets and Toilet Compartments (See Figure # 604 & 604.3 on sheet A10.06)

604.1 General. Water closets and toilet compartments shall comply with Section 604. Compartments containing more than one plumbing fixture shall comply with Section 603. Wheelchair accessible compartments shall comply with Section 604.9. Ambulatory accessible compartments shall comply with Section 604.10.
Exception: Water closets and toilet compartments primarily for children's use shall be permitted to comply with Section 604.11 as applicable.
604.2 Location. The water closet shall be located with a wall or partition to the rear and to one side. The centerline of the water closet shall be 16 inches (405 mm) minimum and 18 inches (455 mm) maximum from the side wall or partition. Water closets located in ambulatory accessible toilet compartments specified in Section 604.10 shall have the centerline of the water closet 17 inches (430 mm) minimum and 19 inches (485 mm) maximum from the side wall or partition.
604.3 Clearance.
604.3.1 Clearance width. Clearance around a water closet shall be 60 inches (1525 mm) minimum in width, measured perpendicular from the sidewall.
604.3.2 Clearance depth. Clearance around the water closet shall be 56 inches (1420 mm) minimum in depth, measured perpendicular from the rear wall.
604.3.3 Clearance overlap. The required clearance around the water closet shall be permitted to overlap the water closet, associated grab bars, paper dispensers, sanitary napkin receptacles, coat hooks, shelves, accessible routes, clear floor space at other fixtures and the turning space. No other fixtures or obstructions shall be within the required water closet clearance.
604.4 Height. The height of water closet seats shall be 17 inches (430 mm) minimum and 19 inches (485 mm) maximum above the floor, measured to the top of the seat. Seats shall not be sprung to return to a lifted position.
Exceptions:
1. A water closet which is adjustable in height by the user is permitted provided that at least one adjustment setting provides a seat within the range specified in this section.
2. A water closet in a toilet room for a single occupant, accessed only through a private office and not for common use or public use,
604.5 Grab Bars. Grab bars for water closets shall comply with Section 609 and shall be provided in accordance with Sections 604.5.1 and 604.5.2. Grab bars shall be provided on the rear wall and on the side wall closest to the water closet.
EXCEPTIONS:
1. Grab bars shall not be required to be installed in a toilet room for a single occupant, accessed only through a private office and not for common use or public use, provided reinforcement has been installed in walls and located so as to permit the installation of grab bars complying with Section 604.5.
2. In detention or correction facilities, grab bars shall not be required to be installed in housing or holding cells or rooms that are specially designed without protrusions for purposes of suicide prevention.
604.5.1 Fixed Side Wall Grab Bars. Fixed side-wall grab
bars shall include a horizontal bar complying with Section 604.5.1.1 and a vertical grab bar complying with Section 604.5.1.2. The vertical grab bar at water closets primarily
for children's use shall comply with Section 609.4.2
604.5.1.1 Horizontal grab bar. A horizontal grab bar 42 inches (1065 mm) minimum in length shall be located 12 inches (305 mm) maximum from the rear wall and extend 54 inches (1370 mm) minimum from the rear wall.
604.5.1.2 Vertical grab bar. A vertical grab bar 18 inches (455 mm) minimum in length shall be mounted with the bottom of the bar located 39 inches (990 mm) minimum and 41 inches (1040 mm) maximum above the floor, and with the center line of the bar located 39 inches (990 mm) minimum and 41 inches (1040 mm) maximum from the rear wall.

604.5.2 Rear Wall Grab Bars. The fixed rear-wall grab bar shall
1. Be 36 inches (915 mm) minimum in length,
2. Be located 6 inches maximum (150 mm) from the side wall, and
3. Extend 42 inches (1065 mm) minimum from the side wall.
EXCEPTIONS:
1. The rear grab bar shall be permitted to be 24 inches minimum in length, centered on the water closet, where wall space does not permit a grab bar 36 inches minimum in length due to the location of a recessed fixture adjacent to the water closet.
2. Where an administrative authority requires flush controls for flush valves to be located in a position that conflicts with the location of the rear grab bar, that grab bar shall be permitted to be split or shifted to the open side of the toilet area.
604.6 Flush controls. Flush controls shall be hand operated or automatic. Hand operated flush controls shall comply with Section 309. Flush controls shall be located on the open side of the water closet.
Exception: In ambulatory accessible toilet compartments complying with Section 604.10, flush controls shall be permitted to be located on either side of the water closet.
604.7 Dispensers. Toilet paper dispensers shall comply with Sections 309.4 and 609.3. Dispensers shall not be of a type that control delivery or do not allow continuous paper flow.
604.7.1 Location. Where the dispenser is located above the grab bar, the outlet of the dispenser shall be located within an area 24 inches (610 mm) minimum and 36 inches (915 mm) maximum from the rear wall. Where the dispenser is located below the grab bar, the outlet of the dispenser shall be located 18 inches (455 mm) minimum and 48 inches (1220 mm) maximum above the floor.
Exception: Toilet paper dispensers that accommodate a maximum of 2 toilet paper rolls of not more than 5-inch (125 mm) diameter each shall be permitted to be located 7 inches (180 mm) minimum and 9 inches (230 mm) maximum in front the of the water closet measured to the cen terline of the dispenser. The outlet of the dispenser shall be 15 inches (380 mm) minimum and 48 inches (1220 mm)maximum above the floor.
604.8 Coat hooks and shelves. Coat hooks provided within toilet compartments shall be 48 inches (1220 mm) maximum above the floor. Shelves shall be 40 inches (1015 mm) minimum and 48 inches (1220 mm) maximum above the floor.
604.9 Wheelchair accessible toilet compartments.
604.9.1 General. Wheelchair accessible toilet compartments shall comply with Section 604.9.
604.9.2 Size. Wheelchair accessible toilet compartments shall comply with Section 604.9.2.1, 604.9.2.2 or 604.9.2.3 as applicable.
604.9.2.1 Minimum area. The minimum area of a wheelchair accessible toilet compartment shall be 60 inches (1525 mm) minimum in width measured perpendicular to the side wall, and 56 inches (1420 mm) mini mum in depth for wall hung water closets, and 59 inches (1500 mm) minimum in depth for floor mounted water closets measured perpendicular to the rear wall.
604.9.2.2 Compartment for children's use. The minimum area of a wheelchair accessible toilet compart ment primarily for children's use shall be 60 inches (1525 mm) minimum in width measured perpendicular to the side wall, and 59 inches (1500 mm) minimum in depth for wall hung and floor mounted water closets measured perpendicular to the rear wall.
604.9.2.3 Alternate wheelchair accessible toilet compartments. Where an alternate wheelchair accessible toilet compartment is provided, the minimum area of the compartment shall be 60 inches (1525 mm) minimum in width, measured perpendicular to the side wall, and 84 inches (2135 mm) minimum in depth, measured perpendicular to the rear wall.
604.9.3 Doors. Wheelchair accessible toilet compartment doors, including door hardware, shall comply with Section 404. The door shall be self-closing. A door pull complying with Section 404.2.6 shall be placed on both sides of the door near the latch. Wheelchair accessible toilet compartment doors shall not swing into the required minimum area of the compartment.
Exceptions:
1. Outside of the compartment, where the approach is to the latch side of the wheelchair accessible toilet compartment, door clearance between the door side of the compartment and any obstruction shall be 42 inches (1065 mm) minimum.
2. Within the wheelchair accessible toilet compartment, maneuvering clearances at the door shall not be required to comply with Section 404.
3. In an alternate wheelchair accessible toilet compartment, the door shall be permitted to swing into the stall where a clear floor space complying with Section 305.3 is provided within the stall beyond the arc of the door swing.
604.9.3.1 Door opening location. The farthest edge of the wheelchair accessible toilet compartment door opening shall be located in the front wall or partition or in the side wall or partition as required by Table 604.9.3.1.
604.9.4 Approach. Wheelchair accessible toilet compartments shall be arranged for left-hand or right-hand approach to the water closet.
604.9.5 Toe clearance. Toe clearance for wheelchair accessible toilet compartments primarily for children's use shall comply with Section 604.9.5.2. Toe clearance for other wheelchair accessible toilet compartments shall comply with Section 604.9.5.1.
604.9.5.1 Toe clearance at wheelchair accessible toilet compartments. The front partition and at least one side partition of wheelchair accessible toilet compartments shall provide a toe clearance of 12 inches (305mm) minimum above the floor and extending 8 inches (205 mm) beyond the compartment side face of the partition, exclusive of partition support members.
Exceptions:
1. Toe clearance at the front partition is not required in a wheelchair accessible toilet compartment greater than 64 inches (1625 mm) in depth with a wall-hung water closet, or greater
than 67 inches (1700 mm) in depth with a floor-mounted water closet.
2. Toe clearance at the side partition is not required in a wheelchair accessible toilet compartment greater than 68 inches (1725 mm) in width.
604.9.5.2 Toe clearance at wheelchair accessible toilet compartments for children's use. The front partition and at least one side partition of wheelchair accessible toilet compartments primarily for children's use shall provide a toe clearance of 12 inches (305 mm) minimum above the floor and extending 8 inches (205 mm) beyond the wheelchair accessible toilet compartment side face of the partition, exclusive of partition support members.
Exceptions:
1. Toe clearance at the front partition is not required in a wheelchair accessible toilet compartment greater than 67 inches (1700 mm) in depth.
2. Toe clearance at the side partition is not required in a wheelchair accessible toilet compartment greater than 68 inches (1725 mm) in width.
604.9.6 Grab bars. Grab bars shall comply with Section 609. Side wall grab bars complying with Section 604.5.1located on the wall closest to the water closet, and a rear wall grab bar complying with Section 604.5.2, shall be provided.
604.10 Ambulatory accessible toilet compartments.
604.10.1 General. Ambulatory accessible toilet compartments shall complay with Section 604.10.
604.10.2 Size. The minimum area of an ambulatory accessible toilet compartment shall be 60 inches (1525 mm) minimum in depth and a width of 35 inches (890 mm) minimum and 37 inches (940 mm) maximum.
604.10.3 Doors. Ambulatory accessible toilet compartment doors, including door hardware, shall comply with Section 404. The door shall be self-closing. A door pull complying with Section 404.2.6 shall be placed on both sides of the door near the latch. Compartment doors shall not swing into the required minimum area of the compartment.
Exceptions:
1. Outside of the ambulatory accessible toilet compartment, where the approach is to the latch side of the compartment door, clearance between the door side of the compartment and any obstruction shall be 42 inches (1065 mm) minimum.
2. Within the ambulatory accessible toilet compartment, maneuvering clearances at the door shall not be required to comply with Section 404.
604.10.4 Grab bars. Grab bars shall comply with Section 609. Side wall grab bars complying with Section 604.5.1 shall be provided on both sides of the compartment.
604.11 Water closets and toilet compartments for children's use.
604.11.1 General. Water closets and wheelchair and ambulatory accessible toilet compartments primarily for children's use shall comply with Section 604.11.
604.11.2 Location. The water closet shall be located with a wall or partition to the rear and to one side. The centerline of the water closet shall be 12 inches (305 mm) mini mum and 18 inches (455 mm) maximum from the side wall or partition. Water closets located in ambulatory accessible toilet compartments specified in Section 604.10 shall be located as specified in Section 604.2.
604.11.3 Clearance. A clearance around the water closet complying with Section 604.3 shall be provided.
604.11.4 Height. The height of water closet seats shall be 11 inches (280 mm) minimum and 17 inches (430 mm) maximum above the floor, measured to the top of the seat. Seats shall not be sprung to return to a lifted position.
604.11.5 Grab bars. Grab bars for water closets shall comply with Section 604.5.
604.11.6 Flush controls. Flush controls shall be hand operated or automatic. Hand operated flush controls shall comply with Sections 309.2 and 309.4 and shall be installed 36 inches (915 mm) maximum above the floor. Flush controls shall be located on the open side of the water closet.
Exception: In ambulatory accessible toilet compartments complying with Section 604.10, flush controls shall be permitted to be located on either side of the water closet.
604.11.7 Dispensers. Toilet paper dispensers shall comply with Section 309.4. Dispensers shall not be of a type that control delivery or do not allow continuous paper flow.
604.11.7.1 Location. The outlet of toilet paper dispens ers shall be located within an area 24 inches (610 mm) minimum and 42 inches (1065 mm) maximum from the rear wall. The outlet of the dispenser shall be 14 inches (355 mm) minimum and 19 inches (485 mm) maximum above the floor.
Exception: Toilet paper dispensers that accommodate a maximum of 2 toilet paper rolls of not more than 5-inch diameter each shall be permitted to be located 7 inches minimum and 9 inches maximum in front of the of the water closet measured to the centerline of the dispenser. The outlet of the dispenser shall be 14 inches (355 mm) minimum and 19 inches (485 mm) maximum above the floor.

604.11.8 Toilet compartments. Wheelchair and ambulatory accessible toilet compartments shall comply with Sections 604.9 and 604.10, as applicable.

605 Urinals (See Figure # 605.2 on sheet A10.06)

605.1 General. Urinals shall comply with Section 605.
605.2 Height and depth. Urinals shall be of the stall type or shall be of the wall hung type with the rim at 17 inches (430 mm) maximum above the floor. Urinals shall be 131/2 inches (345 mm) minimum in depth measured from the outer face of the urinal rim to the finished wall surface
605.3 Clear floor space. A clear floor space positioned for forward approach shall be provided.
605.4 Flush controls. Flush controls shall be hand operated or automatic. Hand operated flush controls shall comply with Section 309.

606 Lavatories and Sinks (See Figure # 606.3 on sheet A10.06)

606.1 General. Accessible lavatories and sinks shall comply with Section 606.
606.2 Clear Floor Space. A clear floor space complying with Section 305.3, positioned for forward approach, shall be provided. Knee and toe clearance complying with Section 306 shall be provided. The dip of the overflow shall not be considered in determining knee and toe clearances.
EXCEPTIONS:
1. A clear floor space providing a parallel approach shall be permitted at a kitchen sink in a space where a cook top or conventional range is not provided.
2. The requirement for knee and toe clearance shall not apply to a lavatory in a toilet and bathing facility for a single occupant, accessed only through a private office and not for common use or public use.
3. A knee clearance of 24 inches (610 mm) minimum above the floor shall be permitted at lavatories and sinks used primarily by children ages 6 through 12 where the higher of the rim or counter surface is 31 inches (785 mm) maximum above the floor.
4. A clear floor space providing a parallel approach shall be permitted at lavatories and sinks used primarily by children ages 5 and younger.
5. The requirement for knee and toe clearance shall not apply to more than one bowl of a multibowl sink.
6. A clear floor space providing a parallel approach shall be permitted at wet bars.
606.3 Height. The front of lavatories and sinks shall be 34 inches maximum above the floor, measured to the higher of the rim or counter surface.
Exception: A lavatory in a toilet or bathing facility for a single occupant, accessed only through a private office and not for common use or public use, shall not be required to comply with Section 606.3.
606.4 Faucets. Faucets shall comply with Section 309. Hand-operated metering faucets shall remain open for 10 seconds minimum.
Exception: Automatic faucets shall not be required to comply with Section 309 provided that the reach depth to activate the faucets and the reach depth to the water flow is 11 inches (280 mm) maximum.
606.5 Lavatories with enhanced reach range. Where enhanced reach range is required at lavatories, faucets and soap dispenser controls shall have a reach depth of 11 inches
(280 mm) maximum. Water and soap outlets shall be provided with a reach depth of 11 inches (280 mm) maximum.
The lavatory shall be 34 inches (865 mm) maximum above the floor, measured to the higher of the rim or counter surface.
Exceptions:
1. Enhanced reach range faucets shall not be required on lavatories provided with automatic faucets where the reach depth to activate the faucets and the reach depth to the water outlet is 11 inches (280 mm) maximum.
2. Enhanced reach range soap dispensers shall not be required on lavatories provided with automatic dispensers where the reach depth to activate the soap dispensers and the reach depth to the soap outlet is 11 inches (280 mm) maximum.
606.6 Exposed Pipes and Surfaces. Water supply and drain pipes under lavatories and sinks shall be insulated or otherwise configured to protect against contact. There shall be no sharp or abrasive surfaces under lavatories and sinks.

607 Bathtubs (See Figure # 607 on sheet A10.06)

607.1 General. Accessible bathtubs shall comply with Section 607.
607.2 Clearance. A clearance in front of bathtubs extending the length of the bathtub and 30 inches minimum in depth shall be provided. Where a permanent seat is provided at the head end of the bathtub, the clearance shall extend 12 inches minimum beyond the wall at the head end of the bathtub.
607.3 Seat. A permanent seat at the head end of the bathtub or a removable in-tub seat shall be provided. Seats shall com ply with Section 610.
607.4 Grab Bars. Grab bars shall comply with Section 609 and shall be provided in accordance with Section 607.4.1 or 607.4.2.
EXCEPTIONS: Grab bars shall not be required to be installed in a bathing facility for a single occupant accessed only through a private office and not for common use or public
use, provided reinforcement has been installed in walls and located so as to permit the installation of grab bars complying with Section 607.4.
607.4.1 Bathtubs with Permanent Seats. For bathtubs with permanent seats, grab bars complying with Section 607.4.1 shall be provided.
607.4.1.1 Back Wall. Two horizontal grab bars shall be provided on the back wall, one complying with Section 609.4 and the other 9 inches above the rim of the bathtub. Each grab bar shall be located 15 inches maximum from the head end wall and extend to 12 inches maximum from the control end wall.
607.4.1.2 Control End Wall. Control end wall grab bars shall comply with Section 607.4.1.2.
EXCEPTION: An L-shaped continuous grab bar of equivalent dimensions and positioning shall be permitted to serve the function of separate vertical and horizontal grab bars.
607.4.1.2.1 Horizontal Grab Bar. A horizontal grab bar 24 inches minimum in length shall be provided on the control end wall at the front edge of the bathtub.
607.4.1.2.2 Vertical Grab Bar. A vertical grab bar 18 inches minimum in length shall be provided on the control end wall 3 inches minimum to 6 inches maximum above the horizontal grab bar, and 4 inches maximum inward from the front edge of the bath tub.
607.4.2 Bathtubs without Permanent Seats. For bathtubs without permanent seats, grab bars complying with Section 607.4.2 shall be provided.
607.4.2.1 Back Wall. Two horizontal grab bars shall be provided on the back wall, one complying with Section 609.4 and the other 9 inches above the rim of the bathtub. Each grab bar shall be 24 inches minimum in length, located 24 inches maximum from the head end wall and extend to 12 inches maximum from the control end wall.
607.4.2.2 Control End Wall. Control end wall grab bars shall comply with Section 607.4.2.2.
607.4.2.3 Head End Wall. A horizontal grab bar 12 inches minimum in length shall be provided on the head end wall at the front edge of the bathtub.
607.5 Controls. Controls, other than drain stoppers, shall be provided on an end wall, located between the bathtub rim and grab bar, and between the open side of the bathtub and the midpoint of the width of the bathtub. Controls shall comply with Section 309.4.
607.6 Hand Shower. A hand shower with a hose 59 inches minimum in length, that can be used as both a fixed shower head and as a hand shower, shall be provided. The hand shower shall have a control with a nonpositive shut-off feature. An adjustable-height hand shower mounted on a vertical bar shall be installed so as to not obstruct the use of grab bars.
607.7 Bathtub Enclosures. Enclosures for bathtubs shall not obstruct controls or transfer from wheelchairs onto bathtub seats or into bathtubs. Enclosures on bathtubs shall not have tracks installed on the rim of the bathtub.
607.8 Water Temperature. Bathtubs shall deliver water that is 120 degrees F maximum.

608 Shower Compartments. (See Figure # 608.2 & 608.3 on sheet A10.07)

608.1 General. Shower compartments shall comply with Section 608
608.2 Size, clearance and seat. Shower compartments shall
have sizes, clearances and seats complying with Section 608.2.
608.2.1 Transfer-type shower compartments. Transfer-type shower compartments shall comply with Section 608.2.
608.2.1.1 Size. Transfer-type shower compartments shall have a clear inside dimension of 36 inches in width and 36 inches in depth, measured at the center point of opposing sides. An entry 36 inches minimum in width shall be provided.
608.2.1.2 Clearance.
608.2.1.2.1 New buildings and facilities. In new buildings and facilities, a clearance of 52 inches (1320 mm) minimum in length and 36 inches (915mm) minimum in depth shall be provided adjacent to the open face of the compartment. The length of the clear floor space shall be measured perpendicular from either the control wall or from 4 inches (100mm) behind the control wall.
608.2.1.2.2 Existing buildings and facilities. In existing buildings and facilities, a clearance of 48 inches (1220 mm) minimum in length measured perpendicular from the control wall, and 36 inches (915mm) minimum in depth shall be provided adjacent to the open face of the compartment.

ALL REPORTS, PLANS, SPECIFICATIONS AND COMPUTER FILES RELATING TO THIS PROJECT ARE THE PROPERTY OF THE MARTIN ARCHITECTURAL GROUP. THE MARTIN ARCHITECTURAL GROUP RETAINS ALL COMMON LAW, STATUTE AND OTHER RESERVED RIGHTS INCLUDING THE COPYRIGHT THERETO. REPRODUCTION OF THE MATERIAL HEREIN OR SUBSTANTIAL USE WITHOUT WRITTEN PERMISSION OF THE MARTIN ARCHITECTURAL GROUP VIOLATES THE COPYRIGHT LAWS OF THE UNITED STATES AND WILL BE SUBJECT TO LEGAL PROSECUTION.
©2022, The Martin Architectural Group, P.C.

REGISTERED ARCHITECT PENNSYLVANIA DREW ROMANIC No. RA407676

THE MARTIN ARCHITECTURAL GROUP, P.C.
ARCHITECTS AND LAND PLANNERS
A PROFESSIONAL CORPORATION
240 NORTH 22ND STREET, PHILADELPHIA, PA 19103
P (215) 665-1080 F (215) 561-5064

| | |
|---|---|
| P.A.: | DREW ROMANIC |
| P.M.: | JASON DECAMPLI |
| DRAWN BY: | MAG |
| PROJECT NO: | 1362-12 |

| NO. | REVISION | DATE |
|---|---|---|
| 1 | PERMIT SET | 12/20/22 |

ACCESSIBILITY INFORMATION
**Granite Run Apartment 02**
MIDDLETOWN TOWNSHIP, PA

| | |
|---|---|
| SCALE: | AS NOTED |
| DATE: | 12/31/2017 |

**A10.02**

©2022, The Martin Architectural Group, P.C.

# ANSI 2017 REFERENCE

ACCESSIBILITY/ADAPTABILITY SPECIFICATIONS FOR DWELLING UNITS ONLY - Based on ICC / ANSI A117.1 - 2017

**This sheet is one of two sheets of specifications.**
Information contained on sheets A10.01 through A10.04 are intended to provide detailed technical provisions for features within a dwelling unit. Scope requirements to determine units which must comply with the specifications herein are referenced elsewhere in the construction documents.

608.2.1.3 Seat. A folding or non-folding seat comply ing with Section 610 shall be provided on the wall opposite the control wall.
Exception: A seat is not required to be installed in a shower for a single occupant, accessed only through a private office and not for common use or public use, provided reinforcement has been installed in walls and located so as to permit the installation of a shower seat.
608.2.2 Standard Roll-in-Type Shower Compartments. Standard roll-in-type shower compartments shall comply with Section 608.2.2
608.2.2.1 Size. Standard roll-in-type shower compartments shall have a clear inside dimension of 60 inches (1525 mm) minimum in width and 30 inches (760 mm) minimum in depth, measured at the center point of opposing sides. An entry 60 inches (1525 mm) minimum in width shall be provided.
608.2.2.2 Clearance. A clearance of 60 inches (1525mm) minimum in length adjacent to the 60-inch (1525mm) width of the open face of the shower compartment, and 30 inches (760 mm) minimum in depth, shall be provided.
Exception: A lavatory complying with Section 606 shall be permitted at the end of the clearance opposite the seat.
608.2.2.3 Seat. A folding seat complying with Section 610 shall be provided on an end wall.
Exceptions:
1. A seat is not required to be installed in a shower for a single occupant accessed only through a private office and not for common use or public use, provided reinforcement has been installed in walls and located so as to permit the installation of a shower seat.
2. A fixed seat shall be permitted where the seat does not overlap the minimum clear inside dimension required by Section 608.2.2.1.
608.2.3 Alternate roll-in-type shower compartments.
Alternate roll-in-type shower compartments shall comply with Section 608.2.3.
608.2.3.1 Size. Alternate roll-in shower compartments shall have a clear inside dimension of 60 inches (1525mm) minimum in width, and 36 inches (915 mm) in depth, measured at the center point of opposing sides. An entry 36 inches (915) mm) minimum in width shall be provided at one end of the 60-inch (1525 mm) width of the compartment. A seat wall, 24 inches (610 mm) minimum and 36 inches (915 mm) maximum in length, shall be provided on the entry side of the compartment.
608.2.3.2 Seat. A folding seat complying with Section 610 shall be provided on the seat wall opposite the back wall.
Exception: A seat is not required to be installed in a shower for a single occupant, accessed only through a private office and not for common use or public use, provided reinforcement has been installed in walls and located so as to permit the installation of a shower seat.
608.3 Grab Bars. Grab bars shall comply with Section 609 and shall be provided in accordance with Section 608.3. Where multiple grab bars are used, required horizontal grab bars shall be installed at the same height above the floor.
EXCEPTIONS: Grab bars shall not be required to be installed in a shower for a single occupant, accessed only through a private office and not for common use or public use, provided reinforcement has been installed in walls and located so as to permit the installation of grab bars complying with Section 608.3.
608.3.1 Transfer-Type Showers. Grab bars for transfer type showers shall comply with Section 608.3.1.
608.3.1.1 Horizontal Grab Bars. Horizontal grab bars shall be provided across the control wall and on the back wall to a point 18 inches from the control wall.
608.3.1.2 Vertical Grab Bar. A vertical grab bar 18 inches minimum in length shall be provided on the control end wall 3 inches minimum to 6 inches maximum above the horizontal grab bar, and 4 inches maximum inward from the front edge of the shower.
608.3.2 Standard Roll-in-Type Showers. Grab bars in standard roll-in showers shall comply with Sections 608.3.2.1 through 608.3.2.3.
608.3.2.1 Back-wall grab bar. In standard roll-in type showers, a grab bar shall be provided on the back wall beginning at the edge of the seat. The grab bars shall not be provided above the seat. The back-wall grab bar shall extend the length of the wall and extend within 6 inches (150 mm) maximum from the adjacent side wall opposite the seat.
Exceptions:
1. The back wall grab bar shall not be required to exceed 48 inches (1220 mm) in length.
2. The back-wall grab bar is not required to extend within 6 inches (150 mm) of the adja cent side wall opposite the seat if it would require the grab bar length to exceed 48 inches (1220 mm) in length.
608.3.2.2 Side-wall grab bars. Where a side wall is provided opposite the seat within 72 inches (1830 mm of the seat wall, a grab bar shall be provided on the side-wall opposite the seat. The side wall grab bar shall extend the length of the wall and extend within 6 inches (150 mm) maximum from the adjacent back wall.
Exception: The side-wall grab bar shall not be required to exceed 30 inches (760 mm) in length.
608.3.2.3 Vertical grab bar. Where a side wall is pro vided opposite the seat within 72 inches (1830 mm) of the seat wall a vertical grab bar shall be provided. A vertical grab bar 18 inches (455 mm) minimum in length shall be provided on the end wall 3 inches (75mm) minimum and 6 inches (150 mm) maximum above the horizontal grab bar, and 4 inches (100 mm) maximum inward from the front edge of the shower.
608.3.3 Alternate Roll-in-Type Showers. In alternate roll-in type showers, grab bars shall be provided on the back wall and the end wall adjacent to the seat. Grab bars shall not be provided above the seat. Grab bars shall be 6 inches maximum from the adjacent wall.
608.4 Controls and hand showers. Controls and hand showers shall comply with Sections 608.4 and 309.4.
608.4.1 Transfer-type showers. In transfer-type showers, the controls and hand shower shall be located:
1. On the control wall opposite the seat.
2. At a height of 38 inches (965 mm) minimum and 48 inches (1220 mm) maximum above the shower floor, and
3. 15 inches (380 mm) maximum, from the centerline of the control wall toward the shower opening.
608.4.2 Standard roll-in showers. In standard roll-in showers, the controls and hand shower shall be located above the seat. Controls and hand showers shall be located according to the following:
1. On the back wall,
2. At a height of 38 inches (965 mm) minimum and 48 inches (1220 mm) maximum above the shower floor and
3. 16 inches (405 mm) minimum and 27 inches (685 mm) maximum from the wall behind the seat.
608.4.3 Alternate roll-in showers. In alternate roll-in showers, the controls and hand shower shall be located
1. At a height of 38 inches (965 mm) minimum and 48 inches (1220 mm) maximum above the shower floor, and
2. Where the controls and hand shower are located on the end wall adjacent to the seat, the controls and hand shower shall be 16 inches (405 mm) minimum and 27 inches (685 mm) maximum from the wall behind the seat wall, or
3. Where the controls and hand shower are located on the back wall opposite the seat, the controls and hand shower shall be located within 15 inches (380 mm) maximum from the centerline of the seat toward the transfer space.
608.5 Hand showers. A hand shower with a hose 59 inches (1500 mm) minimum in length, that can be used both as a fixed shower head and as a hand shower, shall be provided.The hand shower shall have a control with a nonpositive shutoff feature. Where provided, an adjustable-height hand shower mounted on a vertical bar shall be installed so as to not obstruct the use of grab bars. A means to hold the hand shower wand while in the on or off position shall be located at a height of 38 inches (965 mm) minimum and 48 inches (1220 mm) maximum above the shower finish floor.
Exception: In other than Accessible units and Type A units, a fixed shower head located 48 inches (1220 mm) maximum above the shower floor shall be permitted in lieu of a hand shower.
608.6 Thresholds. Thresholds in roll-in-type shower com partments shall be 1/2 inch (13 mm) maximum in height in accordance with Section 303. In transfer-type shower com partments, thresholds 1/2 inch (13 mm) maximum in height shall be beveled, rounded, or vertical.
Exception: In existing facilities, in transfer-type shower compartments where provision of a threshold 1/2 inch (13 mm) in height would disturb the structural reinforcement of the floor slab, a threshold 2 inches (51 mm) maximum in height shall be permitted.
608.7 Shower enclosures. Shower compartment enclosures for shower compartments shall not obstruct controls or obstruct transfer from wheelchairs onto shower seats.
608.8 Water temperature. Showers shall deliver water that is 120°F (49°C) maximum.

609 Grab bars

609.1 General. Grab bars in toilet or bathing facilities shall comply with Section 609.
609.2 Cross section. Grab bars shall have a cross section complying with Section 609.2.1 or 609.2.2.
609.2.1 Circular cross section. Grab bars with a circular cross section shall have an outside diameter of 11/4 inch (32 mm) minimum and 2 inches (51 mm) maximum.
609.2.2 Noncircular cross section. Grab bars with a non circular cross section shall have a cross section dimension of 2 inches (51 mm) maximum, and a perimeter dimension of 4 inches (100 mm) minimum and 4.8 inches (120 mm) maximum.
609.3 Spacing. The space between the wall and the grab bar shall be 11/2 inches (38 mm). The space between the grab bar and projecting objects below and at the ends of the grab bar shall be 11 /2 inches (38 mm) minimum. The space between the grab bar and projecting objects above the grab bar shall be 12 inches (305 mm) minimum.
Exceptions:
1. The space between the grab bars and shower controls, shower fittings, and other grab bars above the grab bar shall be permitted to be 11/2 inches (38 mm) minimum.
2. Recessed dispensers projecting from the wall 1/4 inch (6.4 mm) maximum measured from the face of the dispenser and complying with Section 604.7 shall be permitted within the 12-inch (305 mm) space above and the 11/2-inch (38 mm) spaces below and at the ends of the grab bar.
609.4 Position of grab bars.
609.4.1 General. Grab bars shall be installed in a horizontal position, 33 inches (840 mm) minimum and 36 inches (915 mm) maximum above the floor measured to the top of the gripping surface or shall be installed as required by
Items 1 through 3.
1. The lower grab bar on the back wall of a bathtub shall comply with Section 607.4.1.1 or 607.4.2.1.
2. Vertical grab bars shall comply with Sections 604.5.1.2, 607.4.1.2.2, 607.4.2.2 and 608.3.1.2.
3. Grab bars at water closets primarily for children's use shall comply with Section 609.4.2.
609.4.2 Position of children's grab bars. At water closets primarily for children's use complying with Section 604.11, grab bars shall be installed in a horizontal position 18 inches (455 mm) minimum and 27 inches (685 mm) maximum above the floor measured to the top of the grip ping surface. A vertical grab bar shall be mounted with the bottom of the bar located between 21 inches (535 mm) minimum and 30 inches (760 mm) maximum above the floor and with the centerline of the bar located between 34 inches (865 mm) minimum and 36 inches (915 mm) maxi mum from the rear wall.
609.5 Surface hazards. Grab bars and any wall or other surfaces adjacent to grab bars shall be free of sharp or abrasive elements. Edges shall be rounded.
609.6 Fittings. Grab bars shall not rotate within their fittings.
609.7 Installation and configuration. Grab bars shall be installed in any manner that provides a gripping surface at the locations specified in this standard and does not obstruct the clear floor space. Horizontal and vertical grab bars shall be permitted to be separate bars, a single piece bar, or combination thereof.
609.8 Structural strength. Allowable stresses shall not be exceeded for materials used where a vertical or horizontal force of 250 pounds (1112 N) is applied at any point on the grab bar, fastener mounting device, or supporting structure.

610 Seats (See Figure 610.3 on sheet A10.07)

610.1 General. Seats in bathtubs and shower compartments shall comply with Section 610.
610.2 Bathtub seats. The height of bathtub seats shall be 17 inches (430 mm) minimum and 19 inches (485 mm) maximum above the bathroom floor, measured to the top of the seat. Removable in-tub seats shall be 15 inches (380 mm) minimum and 16 inches (405 mm) maximum in depth. Removable in-tub seats shall be capable of secure placement. Permanent seats shall be 15 inches (380 mm) minimum in depth and shall extend from the back wall to or beyond the outer edge of the bathtub. Permanent seats shall be positioned at the head end of the bathtub.
610.3 Shower compartment seats. The height of shower compartment seats shall be 17 inches (430 mm) minimum and 19 inches (485 mm) maximum above the bathroom floor, measured to the top of the seat. In transfer-type and alternate roll-in-type showers, the seat shall extend along the seat wall to a point within 3 inches (75 mm) of the compartment entry. In standard roll-in-type showers, the seat shall extend from the control wall to a point within 3 inches (75 mm) of the compartment entry. Seats shall comply with Section 610.3.1 or 610.3.2.
610.3.1 Rectangular seats. The rear edge of a rectangular seat shall be 21/2 inches (64 mm) maximum and the front edge 15 inches (380 mm) minimum and 16 inches (405mm) maximum from the seat wall. The side edge of the seat shall be 11/2 inches (38 mm) maximum from the back wall of a transfer-type shower and 11/2 inches (38 mm) maximum from the control wall of a roll-in-type shower.
610.3.2 L-shaped seats. The rear edge of an L-shaped seat shall be 21/2 inches (64 mm) maximum and the front edge 15 inches (380 mm) minimum and 16 inches (405 mm) maximum from the seat wall. The rear edge of the "L" portion of the seat shall be 11/2 inches (38 mm) maximum from the wall and the front edge shall be 14 inches (355mm) minimum and 15 inches (380 mm) maximum from the wall. The end of the "L" shall be 22 inches (560 mm) minimum and 23 inches (585 mm) maximum from the main seat wall.
610.4 Structural strength. Allowable stresses shall not be exceeded for materials used where a vertical or horizontal force of 250 pounds (1112 N) is applied at any point on the seat, fastener mounting device, or supporting structure.

CHAPTER 7: COMMUNICATION ELEMENTS AND FEATURES

702 Fire Alarm Systems

702.1 General. Fire alarm systems shall have permanently installed audible and visible alarms complying with NFPA 72 (1999 or 2002 edition) (incorporated by reference, see "Referenced Standards" in Chapter 1), except that the maximum allowable sound level of audible notification appliances complying with section 4-3.2.1 of NFPA 72 (1999 edition) shall have a sound level no more than 110 dB at the minimum hearing distance from the audible appliance. In addition, alarms in guest rooms required to provide communication features shall comply with sections 4-3 and 4-4 of NFPA 72 (1999 edition) or sections 7.4 and 7.5 of NFPA 72 (2002 edition).

703 Signs

703.1 General. Signs shall comply with 703. Where both visual and tactile characters are required, either one sign with both visual and tactile characters, or two separate signs, one with visual, and one with tactile characters, shall be provided.

703.2 Raised Characters. Raised characters shall comply with 703.2 and shall be duplicated in braille complying with 703.3. Raised characters shall be installed in accordance with 703.4.
703.2.1 Depth. Raised characters shall be 1/32 inch (0.8 mm) minimum above their background.
703.2.2 Case. Characters shall be uppercase. 703.2.3 Style. Characters shall be sans serif. Characters shall not be italic, oblique, script, highly decorative, or of other unusual forms.
703.2.4 Character Proportions. Characters shall be selected from fonts where the width of the uppercase letter "O" is 55 percent minimum and 110 percent maximum of the height of the uppercase letter "I".
703.2.5 Character Height. Character height measured vertically from the baseline of the character shall be 5/8 inch (16 mm) minimum and 2 inches (51 mm) maximum based on the height of the uppercase letter "I".
703.2.6 Stroke Thickness. Stroke thickness of the uppercase letter "I" shall be 15 percent maximum of the height of the character.
703.2.7 Character Spacing. Character spacing shall be measured between the two closest points of adjacent raised characters within a message, excluding word spaces. Where characters have rectangular cross sections, spacing between individual raised characters shall be 1/8 inch (3.2 mm) minimum and 4 times the raised character stroke width maximum. Where characters have other cross sections, spacing between individual raised characters shall be 1/16 inch (1.6 mm) minimum and 4 times the raised character stroke width maximum at the base of the cross sections, and 1/8 inch (3.2 mm) minimum and 4 times the raised character stroke width maximum at the top of the cross sections. Characters shall be separated from raised borders and decorative elements 3/8 inch (9.5 mm) minimum.
703.2.8 Line Spacing. Spacing between the baselines of separate lines of raised characters within a message shall be 135 percent minimum and 170 percent maximum of the raised character height.
703.3 Braille. Braille shall be contracted (Grade 2) and shall comply with 703.3 and 703.4.
703.3.1 Dimensions and Capitalization. Braille dots shall have a domed or rounded shape and shall comply with Table 703.3.1. The indication of an uppercase letter or letters shall only be used before the first word of sentences, proper nouns and names, individual letters of the alphabet, initials, and acronyms.
703.3.2 Position. Braille shall be positioned below the corresponding text. If text is multi-lined, braille shall be placed below the entire text. Braille shall be separated 3/8 inch (9.5 mm) minimum from any other tactile characters and 3/8 inch (9.5 mm) minimum from raised borders and decorative elements.
703.4 Installation Height and Location. Signs with tactile characters shall comply with 703.4.
703.4.1 Height Above Finish Floor or Ground. Tactile characters on signs shall be located 48 inches (1220 mm) minimum above the finish floor or ground surface, measured from the baseline of the lowest tactile character and 60 inches (1525 mm) maximum above the finish floor or ground surface, measured from the baseline of the highest tactile character.

703.4.2 Location. Where a tactile sign is provided at a door, the sign shall be located alongside the door at the latch side. Where a tactile sign is provided at double doors with one active leaf, the sign shall be located on the inactive leaf. Where a tactile sign is provided at double doors with two active leafs, the sign shall be located to the right of the right hand door. Where there is no wall space at the latch side of a single door or at the right side of double doors, signs shall be located on the nearest adjacent wall. Signs containing tactile characters shall be located so that a clear floor space of 18 inches (455 mm) minimum by 18 inches (455 mm) minimum, centered on the tactile characters, is provided beyond the arc of any door swing between the closed position and 45 degree open position.
703.5 Visual Characters. Visual characters shall comply with 703.5.
703.5.1 Finish and Contrast. Characters and their background shall have a non-glare finish. Characters shall contrast with their background with either light characters on a dark background or dark characters on a light background.
703.5.2 Case. Characters shall be uppercase or lowercase or a combination of both.
703.5.3 Style. Characters shall be conventional in form. Characters shall not be italic, oblique, script, highly decorative, or of other unusual forms.
703.5.4 Character Proportions. Characters shall be selected from fonts where the width of the uppercase letter "O" is 55 percent minimum and 110 percent maximum of the height of the uppercase letter "I".
703.5.5 Character Height. Minimum character height shall comply with Table 703.5.5. Viewing distance shall be measured as the horizontal distance between the character and an obstruction preventing further approach towards the sign. Character height shall be based on the uppercase letter "I".
703.5.6 Height From Finish Floor or Ground. Visual characters shall be 40 inches (1015 mm) minimum above the finish floor or ground.
703.5.7 Stroke Thickness. Stroke thickness of the uppercase letter "I" shall be 10 percent minimum and 30 percent maximum of the height of the character.
703.5.8 Character Spacing. Character spacing shall be measured between the two closest points of adjacent characters, excluding word spaces. Spacing between individual characters shall be 10 percent minimum and 35 percent maximum of character height.
703.5.9 Line Spacing. Spacing between the baselines of separate lines of characters within a message shall be 135 percent minimum and 170 percent maximum of the character height.
703.6 Pictograms. Pictograms shall comply with 703.6. 703.6.1 Pictogram Field. Pictograms shall have a field height of 6 inches (150 mm) minimum. Characters and braille shall not be located in the pictogram field.
703.6.2 Finish and Contrast. Pictograms and their field shall have a non-glare finish. Pictograms shall contrast with their field with either a light pictogram on a dark field or a dark pictogram on a light field.
703.6.3 Text Descriptors. Pictograms shall have text descriptors located directly below the pictogram field. Text descriptors shall comply with 703.2, 703.3 and 703.4.
703.7 Symbols of Accessibility. Symbols of accessibility shall comply with 703.7.
703.7.1 Finish and Contrast. Symbols of accessibility and their background shall have a non-glare finish. Symbols of accessibility shall contrast with their background with either a light symbol on a dark background or a dark symbol on a light background.

1101 General

1101.1 Scoping. Dwelling units and sleeping units required by the scoping provisions adopted by the administrative authority to be Accessible units, Type A units, Type B units, Type C (Visitable) units or units with accessible communica tion features shall comply with the applicable provisions of Chapter 11.

1102 Accessible Units

1102.1 General. Accessible units shall comply with Section 1102.
1102.2 Primary entrance. The primary entrance shall be on an accessible route from public and common areas. The primary entrance shall not be to a bedroom unless it is the only entrance.
1102.3 Accessible route. Accessible routes within Accessible units shall comply with Section1102.3.
1102.3.1 Location. At least one accessible route shall con nect all spaces and elements that are a part of the unit. Accessible routes shall coincide with or be located in the same area as a general circulation path.
Exception: An accessible route is not required to unfinished attics and unfinished basements that are part of the unit.
1102.3.2 Turning space. All rooms served by an accessible route shall provide a turning space.
Exceptions:
1. A turning space shall not be required in toilet rooms and bathrooms that are not required to comply with Section 1102.11.2.
2. A turning space is not required within closets or pantries that are 48 inches (1220 mm) maximum in depth.
1102.3.3 Components. Accessible routes shall consist of one or more of the following elements: walking surfaces with a slope not steeper than 1:20, doors and doorways, ramps, elevators, and platform lifts.
1102.4 Walking surfaces. Walking surfaces that are part of an accessible route shall comply with Section 403.
1102.5 Doors and doorways. The primary entrance door to the unit, and all other doorways intended for user passage, shall comply with Section 404.
Exceptions:
1. Existing doors to hospital patient sleeping rooms shall be exempt from the requirement for space at the latch side provided the door is 44 inches (1120mm) minimum in width.
2. In toilet rooms and bathrooms not required to com ply with Section 1102.11.2, maneuvering clearances required by Section 404.2.3 shall not be required on the toilet room or bathroom side of the door.
3. A turning space between doors in a series as required by Section 404.2.5 is not required.
4. Storm and screen doors shall not be required to comply with Section 404.2.5.
5. Communicating doors between individual sleeping units shall not be required to comply with Section 404.2.5.
6. At other than the primary entrance door, where exterior space dimensions of balconies are less than the required maneuvering clearance, door maneuvering clearance is not required on the exterior side of the door.
7. The maneuvering clearances required by Section 404 shall not be required within a closet or pantry complying with Exception 2 of Section 1102.3.2.
1102.6 Ramps. Ramps shall comply with Section 405.
1102.7 Elevators. Elevators within the unit shall comply with Section 407, 408, or 409.
1102.8 Platform lifts. Platform lifts within the unit shall comply with Section 410.
1102.9 Operable parts. Lighting controls, electrical panel boards, electrical switches and receptacle outlets, environmental controls, appliance controls, plumbing fixture controls and user controls for security or intercom systems shall comply with Section 309.
1102.10 Laundry equipment. Washing machines and clothes dryers shall comply with Section 611.
1102.11 Toilet and bathing facilities. At least one toilet and bathing facility shall comply with Section
1102.11.1 Grab bars and shower seat reinforcement. At fixtures in toilet and bathing facilities not required to comply with Section 1102.11.2, reinforcement in accordance with Section 1104.11.1 shall be provided.
Exception: Reinforcement is not required where Type B units are not provided in the structure.
1102.11.2. Toilet and bathing facility. At least one toilet and bathing facility shall comply with Section 603. At least one lavatory, one water closet and either a bathtub or shower within the unit shall comply with Sections 604 through 610. These toilet and bathing fixtures shall be in a single toilet/bathing area, such that travel between fixtures does not require travel through other parts of the unit.
1102.11.2.1 Vanity countertop space. If vanity countertop space is provided in dwelling or sleeping units not required to be Accessible units within the same facility, equivalent vanity countertop space, in terms of size and proximity to the lavatory, shall also be provided in Accessible units.
1102.11.2.2 Mirrors. Mirrors above lavatories required to comply with Section 606 shall have the bottom edge of the reflecting surface 40 inches (1015 mm) maximum above the floor.
1102.12 Kitchens. Kitchens shall comply with Section 804.
1102.13 Windows. Operable windows shall comply with
Section 506.1.
Exceptions:
1. Windows in kitchens shall not be required to comply with Section 1102.13.
2. Windows in bathrooms shall not be required to comply with Section 1102.13.
1102.14 Storage facilities. Where storage facilities are provided, at least one of each type shall comply with Section 905.
Exception: Kitchen cabinets shall not be required to comply with Section 1102.14.
1102.15 Beds. In at least one sleeping area, a minimum of five percent, but not less than one bed shall comply with Section 1102.15.
1102.15.1 Clear floor space. A clear floor space shall be provided on both sides of the bed. The clear floor space shall be positioned for parallel approach to the side of the bed.
Exception: Where a single clear floor space positioned for parallel approach is provided between two beds, a clear floor space shall not be required on both sides of the bed.

1102.15.2 Bed frames. At least one bed shall be provided with an open bed frame.
1102.15.3 Bed height. At least one bed shall measure 17 to 23 inches (430 to 585 mm) high from the floor to the top of the uncompressed mattress.
1102.15.4 Wheelchair charging area. The clear floor space required by Section 1102.15.1 shall also serve as a wheelchair charging area complying with Section 906.

1103 Type A Units (See Figure # 1103.11 - 1103.12 on sheet A10.07)

1103.1 General. Type A units shall comply with Section 1103.
1103.2 Primary entrance. The primary entrance shall be on an accessible route from public and common areas. The primary entrance shall not be to a bedroom unless it is the only entrance.
1103.3 Accessible route. Accessible routes within Type A units shall comply with Section 1103.3.
1103.3.1 Location. At least one accessible route shall connect all spaces and elements that are a part of the unit.
Accessible routes shall coincide with or be located in the same area as a general circulation path.
Exception: An accessible route is not required to unfinished attics and unfinished basements that are part of the unit.
1103.3.2 Turning space. All rooms served by an accessible route shall provide a turning space.
Exceptions:
1. A turning space is not required in toilet rooms and bathrooms that are not required to comply with Section 1103.11.2.
2. A turning space is not required within closets or pantries that are 48 inches (1220 mm) maximum in depth.
1103.3.3 Components. Accessible routes shall consist of one or more of the following elements: walking surfaces with a slope not steeper than 1:20, doors and doorways, ramps, elevators, and platform lifts.
1103.4 Walking surfaces. Walking surfaces that are part of an accessible route shall comply with Section 403.
1103.5 Doors and doorways. The primary entrance door to the unit, and all other doorways intended for user passage, shall comply with Section 404.
Exceptions:
1. Thresholds at exterior sliding doors shall be permitted to be 3/4 inch (19 mm) maximum in height, provided they are beveled with a slope not greater than 1:2.
2. In toilet rooms and bathrooms not required to comply with Section 1103.11.2, maneuvering clearances required by Section 404.2.3 shall not be required on the toilet room or bathroom side of the door.
3. A turning space between doors in a series as required by Section 404.2.5 is not required.
4. Storm and screen doors shall not be required to comply with Section 404.2.5.
5. Communicating doors between individual sleeping units shall not be required to comply with Section 404.2.5.
6. At other than the primary entrance door, where exterior space dimensions of balconies are less than the required maneuvering clearance, door maneuvering clearance is not required on the exterior side of the door.
7. The maneuvering clearances required by Section 404 shall not be required within a closet or pantry complying with Exception 2 of Section 1103.3.2.
1103.6 Ramps. Ramps shall comply with Section 405.
1103.7 Elevators. Elevators within the unit shall comply with Section 407, 408, or 409.
1103.8 Platform lifts. Platform lifts within the unit shall comply with Section 410.
1103.9 Operable parts. Lighting controls, electrical panel boards, electrical switches and receptacle outlets, environmental controls, appliance controls, operating hardware for operable windows, plumbing fixture controls, and user con trols for security or intercom systems shall comply with Section 309.
1103.10 Laundry equipment. Washing machines and clothes dryers shall comply with Section 611.
1103.11 Toilet and bathing facilities. At least one toilet and bathing facility shall comply with Section 1103.11.2. All toi let and bathing facilities shall comply with Section 1103.11.1.
1103.11.1 Grab bar and shower seat reinforcement. Reinforcement shall be provided for the future installation of grab bars complying with Section 604.5 at water closets; grab bars complying with Section 607.4 at bathtubs;and for grab bars and shower seats complying with Sections 608.3, 608.2.1.3, 608.2.2.3 and 608.2.3.2 at shower compartments.
Exceptions:
1. At fixtures not required to comply with Section 1103.11.2, reinforcement in accordance with Section 1104.11.1 shall be permitted.
2. Reinforcement is not required in a room contain ing only a lavatory and a water closet, provided the room does not contain the only lavatory or water closet on the accessible level of the dwell ing unit.
3. Reinforcement for the water closet side wall ver tical grab bar component required by Section 604.5 is not required.
4. Where the lavatory overlaps the water closet clearance in accordance with the exception to Section 1103.11.2.4.4 reinforcement at the water closet rear wall for a 24-inch (610 mm) minimum length grab bar, centered on the water closet, shall be provided.
1103.11.2 General. At least one toilet and bathing facility shall comply with Section 1103.11.2. At least one lavatory, one water closet and either a bathtub or shower within the unit shall comply with Section 1103.11.2. These toilet and bathing fixtures shall be in a single toilet/bathing area, such that travel between fixtures does not require travel through other parts of the unit.
1103.11.2.1 Doors. Doors shall not swing into the clear floor space or clearance for any fixture.
Exception: Where a clear floor space is provided within the room beyond the arc of the door swing.
1103.11.2.2 Lavatory. Lavatories shall comply with Section 606.
Exception: Cabinetry shall be permitted under the lavatory, provided the following criteria are met:
1. The cabinetry can be removed without removal or replacement of the lavatory;
2. The floor finish extends under the cabinetry; and
3. The walls behind and surrounding the cabinetry are finished.
1103.11.2.3 Mirrors. Mirrors above lavatories required to comply with Section 1103.11.2.2 shall have the bottom edge of the reflecting surface 40 inches (1015 mm) maximum above the floor.
1103.11.2.4 Water closet. Water closets shall comply with Section 1103.11.2.4.
1103.11.2.4.1 Location. The water closet shall be positioned with a wall to the rear and to one side. The centerline of the water closet shall be 16 inches (405 mm) minimum and 18 inches (455 mm) maximum from the sidewall.
1103.11.2.4.2 Clearance width. Clearance around the water closet shall be 60 inches (1525 mm) minimum in width, measured perpendicular from the side wall.
1103.11.2.4.3 Clearance depth. Clearance around the water closet shall be 56 inches (1420 mm) minimum in depth, measured perpendicular from the rear wall.
1103.11.2.4.4 Clearance overlap. The required clearance around the water closet shall be permitted to overlap the water closet, associated grab bars, paper dispensers, coat hooks, shelves, accessible routes, clear floor space required at other fixtures, and the wheelchair turning space. No other fixtures or obstructions shall be located within the required water closet clearance.
Exception: A lavatory measuring 24 inches (610 mm) maximum in depth and complying with Section 1103.11.2.2 shall be permitted on the rear wall 18 inches (455 mm) minimum from the centerline of the water closet to the side edge of the lavatory where the clearance at the water closet is 66 inches (1675 mm) minimum measured perpendicular from the rear wall.
1103.11.2.4.5 Height. The top of the water closet seat shall be 15 inches (380 mm) minimum and 19 inches (485 mm) maximum above the floor, measured to the top of the seat.
1103.11.2.4.6 Flush controls. Flush controls shall be hand-operated or automatic. Hand operated flush controls shall comply with Section 309. Hand-operated flush controls shall be located on the open side of the water closet.
1103.11.2.5 Bathing fixtures. The bathing fixture shall be a bathtub complying with Section 1103.11.2.5.1 or a shower compartment complying with Section 1103.11.2.5.2.
1103.11.2.5.1 Bathtub. Bathtubs shall comply with Section 607.
Exception: Countertops and cabinetry shall be
permitted at one end of the clearance, provided
the following criteria are met:
1. The countertop and cabinetry can be removed;
2. The floor finish extends under the countertop and cabinetry; and
3. The walls behind and surrounding the countertop and cabinetry are finished.
1103.11.2.5.2 Shower. Showers shall comply with Section 608.
Exception: At standard roll-in shower compartments complying with Section 608.2.2, lavatories, countertops and cabinetry shall be permitted at one end of the clearance, provided the following criteria are met:
1. The countertop and cabinetry can be removed;
2. The floor finish extends under the countertop and cabinetry; and
3. The walls behind and surrounding the countertop and cabinetry are finished.

ALL REPORTS, PLANS, SPECIFICATIONS AND COMPUTER FILES RELATING TO THIS PROJECT ARE THE PROPERTY OF THE MARTIN ARCHITECTURAL GROUP. THE MARTIN ARCHITECTURAL GROUP RETAINS ALL COMMON LAW, STATUTE AND OTHER RESERVED RIGHTS INCLUDING THE COPYRIGHT THERETO. REPRODUCTION OF THE MATERIAL HEREIN OR SUBSTANTIAL USE WITHOUT WRITTEN PERMISSION OF THE MARTIN ARCHITECTURAL GROUP VIOLATES THE COPYRIGHT LAWS OF THE UNITED STATES AND WILL BE SUBJECT TO LEGAL PROSECUTION.
©2022, The Martin Architectural Group, P.C.

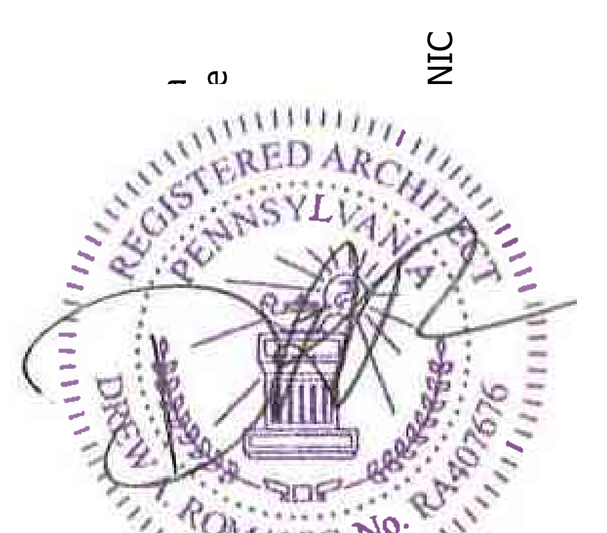


Professi
I hereby prepare duly lice laws of
Professi License Expiratio

THE MARTIN ARCHITECTURAL GROUP, P.C.
ARCHITECTS AND LAND PLANNERS
A PROFESSIONAL CORPORATION
240 NORTH 22ND STREET, PHILADELPHIA, PA, 19103
P (215) 665-1080 F (215) 561-5064

| | |
|---|---|
| P.A.: | DREW ROMANIC |
| P.M.: | JASON DECAMPLI |
| DRAWN BY: | Author |
| PROJECT NO: | 1362-12 |

| NO. | REVISION | DATE |
|---|---|---|
| 1 | PERMIT SET | 12/20/22 |

ACCESSIBILITY INFORMATION
**Granite Run Apartment 02**
MIDDLETOWN TOWNSHIP, PA

| | |
|---|---|
| SCALE: | |
| DATE: | 11/10/22 |

**A10.03**

©2022, The Martin Architectural Group, P.C.

Printed: 1/13/2023 4:53:41 PM

ACCESSIBILITY/ADAPTABILITY SPECIFICATIONS FOR DWELLING UNITS ONLY - Based on ICC / ANSI A117.1 - 2017

**This sheet is one of two sheets of specifications.**
Information contained on sheets A10.01 through A10.04 are intended to provide detailed technical provisions for features within a dwelling unit. Scope requirements to determine units which must comply with the specifications herein are referenced elsewhere in the construction documents.

1103.12 Kitchens. Kitchens shall comply with Section 1103.12.
1103.12.1 Clearance. Clearance complying with Section 1103.12.1 shall be provided.
1103.12.1.1 Minimum clearance. Clearance between all opposing base cabinets, countertops, appliances, or walls within kitchen work areas shall be 40 inches (1015 mm) minimum.
1103.12.1.2 U-shaped kitchens. In kitchens with counters, appliances, or cabinets on three contiguous sides, clearance between all opposing base cabinets, countertops, appliances, or walls within kitchen work areas shall be 60 inches (1525 mm) minimum.
Exception: U-shaped kitchens with an island complying with Section 1103.12.1.1.
1103.12.2 Clear floor space. Clear floor spaces required by Sections 1103.12.3 through 1103.12.5 shall comply with Section 305.
1103.12.3 Work surface. At least one section of counter shall provide an accessible work surface 30 inches (760 mm) minimum in length complying with Section 1103.12.3.
Exception: Spaces that do not provide a cooktop or conventional range shall not be required to provide an accessible work surface.
1103.12.3.1 Clear floor space. A clear floor space, positioned for a forward approach to the work surface, shall be provided. Knee and toe clearance complying with Section 306 shall be provided.
Exception: Cabinetry shall be permitted under the work surface, provided the following criteria are met:
1. The cabinetry can be removed without removal or replacement of the work surface,
2. The floor finish extends under the cabinetry, and
3. The walls behind and surrounding the cabinetry are finished.
1103.12.3.2 Height. The work surface shall be 34 inches (865 mm) maximum above the floor.
Exception: A counter that is adjustable to provide a work surface at variable heights 29 inches (735 mm) minimum and 36 inches (915 mm) maximum above the floor, or that can be relocated within that range without cutting the counter or damaging adjacent cabinets, walls, doors, and structural elements, shall be permitted.
1103.12.3.3 Exposed surfaces. There shall be no sharp or abrasive surfaces under the exposed portions of work surface counters.
1103.12.4 Sink. Sinks shall comply with Section 1103.12.4.
1103.12.4.1 Clear floor space. A clear floor space, positioned for a forward approach to the sink, shall be provided. Knee and toe clearance complying with Section 306 shall be provided.
Exceptions:
1. The requirement for knee and toe clearance shall not apply to more than one bowl of a multi-bowl sink.
2. Cabinetry shall be permitted to be added under the sink, provided the following criteria are met:
2.1 The cabinetry can be removed without removal or replacement of the sink,
2.2 The floor finish extends under the cabinetry, and
2.3 The walls behind and surrounding the cabinetry are finished.
3. A clear floor space providing a parallel approach and centered on the sink shall be permitted at a kitchen sink in a space where a cook top or conventional range is not provided.
4. A clear floor space providing a parallel approach and centered on the sink shall be permitted at wet bars.
1103.12.4.2 Height. The front of the sink shall be 34 inches (865 mm) maximum above the floor, measured to the higher of the rim or counter surface.
Exception: A sink and counter that is adjustable to variable heights 29 inches (735 mm) minimum and 36 inches (915 mm) maximum above the floor, or that can be relocated within that range without cutting the counter or damaging adjacent cabinets, walls, doors and structural elements, provided rough-in plumbing permits connections of supply and drain pipes for sinks mounted at the height of 29 inches (735 mm), shall be permitted.
1103.12.4.3 Faucets. Faucets shall comply with Section 309.
1103.12.4.4 Exposed pipes and surfaces. Water supply and drain pipes under sinks shall be insulated or otherwise configured to protect against contact. There shall be no sharp or abrasive surfaces under sinks.
103.12.5 Appliances. Where provided, kitchen appliances shall comply with Section 1103.12.5.
1103.12.5.1 Operable parts. All appliance controls shall comply with Section 1103.9.
Exceptions:
1. Appliance doors and door latching devices shall not be required to comply with Section 309.4.
2. Bottom-hinged appliance doors, when in the open position, shall not be required to comply with Section 309.3.
1103.12.5.2 Clear floor space. A clear floor space, positioned for a parallel or forward approach, shall be provided at each kitchen appliance.
1103.12.5.3 Dishwasher. A clear floor space, positioned adjacent to the dishwasher door, shall be provided. The dishwasher door in the open position shall not obstruct the clear floor space for the dishwasher or an adjacent sink.
1103.12.5.4 Cooktop. Cooktops shall comply with Section 1103.12.5.4.
1103.12.5.4.1 Approach. A clear floor space, positioned for a parallel or forward approach to the cooktop, shall be provided.
1103.12.5.4.2 Forward approach. Where the clear floor space is positioned for a forward approach, knee and toe clearance complying with Section 306 shall be provided. The underside of the cooktop shall be insulated or otherwise configured to protect from burns, abrasions or electrical shock.
1103.12.5.4.3 Parallel approach. Where the clear floor space is positioned for a parallel approach, the clear floor space shall be centered on the appliance.
1103.12.5.4.4 Controls. The location of controls shall not require reaching across burners.
1103.12.5.5 Oven. Ovens shall comply with Section 1103.12.5.5.
1103.12.5.5.1 Clear floor space. A clear floor space shall be provided. The oven door in the open position shall not obstruct the clear floor space for the oven.
1103.12.5.5.2 Side-hinged door ovens. Side-hinged door ovens shall have a countertop positioned adjacent to the latch side of the oven door.
1103.12.5.5.3 Bottom-hinged door ovens. Bottom hinged door ovens shall have a countertop positioned adjacent to one side of the door.
1103.12.5.5.4 Controls. The location of controls shall not require reaching across burners.
1103.12.5.6 Refrigerator/freezer. Combination refrigerators and freezers shall have at least 50 percent of the freezer compartment shelves, including the bottom of the freezer 54 inches (1370 mm) maximum above the floor when the shelves are installed at the maximum heights possible in the compartment. A clear floor space, positioned for a parallel approach to the refrigerator/freezer, shall be provided. The centerline of the clear floor space shall be offset 24 inches (610 mm) maximum from the centerline of the appliance.
1103.13 Windows. Operable windows shall comply with Section 1103.13.
Exceptions:
1. Windows in kitchens shall not be required to comply with Section 1103.13.
2. Windows in bathrooms shall not be required to comply with Section 1103.13.
1103.13.1 Natural ventilation. Operable windows required to provide natural ventilation shall comply with Sections 309.2 and 309.3.
1103.13.2 Emergency escape. Operable windows required to provide an emergency escape and rescue open ing shall comply with Section 309.2.
1103.14 Storage facilities. Where storage facilities are provided, at least one of each type shall comply with Section 905.
Exception: Kitchen cabinets shall not be required to comply with Section 1103.14

1104 Type B Units

1104.1 General. Type B units shall comply with Section 1104.
1104.1.1. Clear floor space. For Type B units, clear floor spaces shall be 48 inches (1220mm) minimum in length and 30 inches (760 mm) minimum in width.
1104.1.2. Mailboxes. Mailboxes serving Type B units shall be permitted an unobstructed side reach range at 54 inches (1370 mm) maximum above the floor.
1104.2 Primary entrance. The primary entrance shall be on an accessible route from public and common areas. The primary entrance shall not be to a bedroom unless it is the only entrance.
1104.3 Accessible route. Accessible routes within Type B units shall comply with Section 1104.3.
1104.3.1 Location. At least one accessible route shall connect all spaces and elements that are a part of the unit. Accessible routes shall coincide with or be located in the same area as a general circulation path.
Exceptions:
1. An accessible route is not required to unfinished attics and unfinished basements that are part of the unit.
2. One of the following is not required to be on an accessible route:
2.1 A raised floor area in a portion of a living, dining, or sleeping room; or
2.2 A sunken floor area in a portion of a living, dining, or sleeping room; or
2.3 A mezzanine that does not have plumbing fixtures or an enclosed habitable space.
1104.3.2 Components. Accessible routes shall consist of one or more of the following elements: walking surfaces with a slope not steeper than 1:20, doors and doorways, ramps, elevators, and platform lifts.
1104.4 Walking surfaces. Walking surfaces that are part of an accessible route shall comply with Section 1104.4.
1104.4.1 Clear width. The clear width of an accessible route shall comply with Section 403.5.
Exceptions:
1. The clear width shall be permitted to be reduced to 32 inches (815 mm) minimum for a length of 24 inches (610 mm) maximum provided the reduced width segments are separated by segments that are 48 inches (1220 mm) minimum in length and 36 inches (915 mm) minimum in width.
2. Where an accessible route makes a 180-degree turn around an object that is less than 48 inches (1220 mm) in width, clear widths shall be 42 inches (1065 mm) minimum approaching the turn, 48 inches (1220 mm) minimum during the turn and 42 (1065 mm) inches minimum leaving the turn.
3. Where an accessible route makes a 180-degree turn around an object that is less than 48 inches (1220 mm) in width, the clear width approaching the turn and leaving the turn shall be 36 inches (915 mm) minimum provided the clear width during the turn is 60 inches (1525 mm) minimum.
4. Where an accessible route makes a 90-degree turn the clear widths approaching the turn and leaving the turn shall be 36 inches (915 mm) min imum.
5. An accessible route with a clear width less than 60 inches (1525 mm) shall provide passing spaces at intervals of 200 feet (61 m) maximum. Passing spaces shall be either a 60-inch (1525 mm) minimum by 60-inch (1525 mm) minimum space, or an intersection of two walking surfaces that provide a T-shaped turning space complying with Section 304.3.2, provided the base and arms of the T-shaped space extend 48 inches (1220 mm) minimum beyond the intersection.
1104.4.2 Changes in level. Changes in level shall comply with Section 303.
Exception: Where exterior deck, patio or balcony sur face materials are impervious, the finished exterior impervious surface shall be 4 inches (100 mm) maximum below the floor level of the adjacent interior spaces of the unit.
1104.5 Doors and doorways. Doors and doorways shall comply with Section 1104.5.
1104.5.1 Primary entrance door. The primary entrance door to the unit shall comply with Section 404.
Exceptions:
1. Storm and screen doors serving individual dwelling or sleeping units shall not be required to comply with Section 404.2.5.
2. For the maneuvering clearance at swinging doors for the front approach direction on the push side, the dimension perpendicular to the door shall be 48 inches (1220 mm) minimum.
3. For the maneuvering clearance at sliding and folding doors for the front approach direction, the dimension perpendicular to the door shall be 48 inches (1220 mm) minimum.
4. For doorways without doors, the dimension perpendicular to the doorway for the front direction shall be 48 inches (1220 mm) minimum.
1104.5.2 User passage doorways. Doorways intended for user passage shall comply with Section 1104.5.2.
Exception: Doors that are part of a shower door assembly shall not be required to comply with this section.
1104.5.2.1 Clear width. Doorways shall have a clear opening of 313/4 inches (805 mm) minimum. Clear opening of swinging doors shall be measured between the face of the door and stop, with the door open 90 degrees.
1104.5.2.1.1 Double leaf doorways. Where the operable parts on an inactive leaf of a double leaf doorway are located more than 48 inches (1220 mm) or less than 15 inches (380 mm) above the floor, the active leaf shall provide the clearance required by Section 1104.5.2.1.
1104.5.2.2 Thresholds. Thresholds shall comply with Section 303.
Exception: Thresholds at exterior sliding doors shall be permitted to be 3/4 inch (19 mm) maximum in height, provided they are beveled with a slope not steeper than 1:2.
1104.5.2.3 Automatic doors. Automatic doors shall comply with Section 404.3.
1104.6 Ramps. Ramps shall comply with Section 405.
1104.7 Elevators. Elevators serving the unit shall comply with Sections 407, 408 or 409.
Exception: In private residence elevators, the inside dimensions of elevator cars shall provide a clear floor length of 48 inches (1220 mm) minimum and a clear floor width of 36 inches (760 mm) minimum.
1104.8 Platform lifts. Platform lifts within the unit shall comply with Section 410.
Exception: Platform lifts with a single door or with doors on opposite ends shall provide a clear floor width of 36 inches (915 mm) minimum and a clear floor length of 48 inches (1220 mm) minimum.
1104.9 Operable parts. Lighting controls, electrical switches and receptacle outlets, environmental controls, electrical pan elboards, and user controls for security or intercom systems shall comply with Sections 309.3 and 1104.1.1.
Exceptions:
1. Receptacle outlets serving a dedicated use.
2. In a kitchen where two or more receptacle outlets are provided above a length of countertop that is uninterrupted by a sink or appliance, only one receptacle outlet shall be required to comply with this section.
3. In a kitchen where a clear floor space for a parallel approach cannot be located at a countertop in a corner between appliances, receptacle outlets over the countertop shall not be required to comply with this section provided that the countertop area does not exceed 9 square feet (0.835 m2) maximum.
4. Floor receptacle outlets.
5. HVAC diffusers.
6. Controls mounted on ceiling fans.
7. Controls or switches mounted on appliances.
8. Plumbing fixture controls.
9. Reset buttons and shut-offs serving appliances, piping and plumbing fixtures.
10. Where redundant controls other than light switches are provided for a single element, one control in each space shall not be required to comply with this section.
11. Within kitchens and bathrooms, lighting controls, electrical switches and receptacle outlets are permitted to be located over cabinets with countertops 36 inches (915 mm) maximum in height and 251/2 inches (650 mm) maximum in depth.
1104.10 Laundry equipment. Washing machines and clothes dryers shall comply with Section 1104.10.
1104.10.1 Clear floor space. A clear floor space shall be provided for each washing machine and clothes dryer. A parallel approach shall be provided for a top loading machine. A forward or parallel approach shall be provided for a front loading machine.
104.11 Toilet and bathing facilities. Toilet and bathing fixtures shall comply with Section 1104.11.
Exception: Fixtures on levels not required to be accessible.

1104.11.1 Grab bar and shower seat reinforcement.
Reinforcement shall be provided for the future installation of grab bars and shower seats at water closets, bathtubs, and shower compartments. Where walls are located to permit the installation of grab bars and seats complying with Section 604.5 at water closets; grab bars complying with Section 607.4 at bathtubs; and for grab bars and shower seats complying with Sections, 608.3, 608.2.1.3, 608.2.2.3 and 608.2.3.2 at shower compartments; reinforcement shall be provided for the future installation of grab bars and seats complying with those requirements.
Exceptions:
1. In a room containing only a lavatory and a water closet, reinforcement is not required provided the room does not contain the only lavatory or water closet on the accessible level of the unit.
2. At water closets reinforcement for the side wall vertical grab bar component required by Section 604.5 is not required.
3. At water closets where wall space will not permit a grab bar complying with Section 604.5.2, reinforcement for a rear wall grab bar 24 inches (610 mm) minimum in length centered on the water closet shall be provided.
4. At water closets where a side wall is not available for a 42-inch (1065 mm) grab bar complying with Section 604.5.1, reinforcement for a sidewall grab bar, 24 inches (610 mm) minimum in length, located 12 inches (305 mm) maximum from the rear wall, shall be provided.
5. At water closets where a side wall is not available for a 42-inch (1065 mm) grab bar complying with Section 604.5.1 reinforcement for a swing-up grab bar complying with Section 1104.11.1.1 shall be permitted.
6. At water closets where a side wall is not available for a 42-inch (1065 mm) grab bar complying with Section 604.5.1 reinforcement for two swing-up grab bars complying with Section 1004.11.1.1 shall be permitted to be installed in lieu of rein forcement for rear wall and side wall grab bars.
7. In shower compartments larger than 36 inches (915 mm) in width and 36 inches (915 mm) in depth reinforcement for a shower seat is not required
1104.11.1.1 Swing–up grab bars. A clearance of 18 inches (455 mm) minimum from the centerline of the water closet to any side wall or obstruction shall be pro vided where reinforcement for swing–up grab bars is provided. When the approach to the water closet is from the side, the 18 inches (455 mm) minimum shall be on the side opposite the direction of approach. Reinforcement shall accommodate a swing–up grab bar centered 15 3/4 inches (400 mm) from the centerline of the water closet and 28 inches (710 mm) minimum in length, measured from the wall to the end of the hori zontal portion of the grab bar. Reinforcement shall accommodate a swing-up grab bar with a height in the down position of 33 inches (840 mm) minimum and 36 inches (915 mm) maximum. Reinforcement shall be adequate to resist forces in accordance with Section 609.8.
Exception: Where a water closet is positioned with a wall to the rear and to one side, the centerline of the water closet shall be 16 inches (405 mm) minimum and 18 inches (455 mm) maximum from the sidewall.
1104.11.2 Clear floor space. Clear floor spaces required by Section 1104.11.3.1 (Option A) or 1104.11.3.2 (Option B) shall comply with Sections 1104.11.2 and 1104.1.1.
1104.11.2.1 Doors. Doors shall not swing into the clear floor space or clearance for any fixture.
Exception: Where a clear floor space, excluding knee and toe clearances under elements, is provided within the room beyond the arc of the door swing.
1104.11.2.2 Knee and toe clearance. Clear floor space at fixtures shall be permitted to include knee and toe clearances complying with Section 306.
1104.11.3 Toilet and bathing areas. Either all toilet and bathing areas provided shall comply with Section
1104.11.3.1 (Option A), or one toilet and bathing area shall comply with Section 1104.11.3.2 (Option B).
1104.11.3.1 Option A. Each fixture provided shall comply with Section 1104.11.3.1.
Exceptions:
1. Where multiple lavatories are provided in a single toilet and bathing area such that travel between fixtures does not require travel through other parts of the unit, not more than one lavatory is required to comply with Section 1104.11.3.1.
2. A lavatory and a water closet in a room con taining only a lavatory and water closet, provided the room does not contain the only lavatory or water closet on the accessible level of the unit.
1104.11.3.1.1 Lavatory. A clear floor space positioned for a parallel approach shall be provided at a lavatory. The clear floor space shall be centered on the lavatory.
Exception: A lavatory complying with Sections 606.3, 606.4 and 1104.1.1 shall be permitted. Cabinetry shall be permitted under the lavatory provided the following criteria are met:
1. The cabinetry can be removed without removal or replacement of the lavatory, and
2. The floor finish extends under the cabinetry, and
3. The walls behind and surrounding the cabinetry are finished.
1104.11.3.1.2 Water closet. The water closet shall comply with Section 1104.11.3.1.2.
1104.11.3.1.2.1 Location. The centerline of the water closet shall be 16 inches (405 mm) minimum and 18 inches (455 mm) maximum from one side of the required clearance.
1104.11.3.1.2.2 Clearance. Clearance around the water closet shall comply with Sections 1104.11.3.1.2.2.1 through 1104.11.3.1.2.2.3.
Exception: Clearance complying with Sections 1103.11.2.4.2 through 1103.11.2.4.4.
1104.11.3.1.2.2.1 Clearance width. Clearance around the water closet shall be 48 inches (1220 mm) minimum in width, measured perpendicular from the side of the clearance that is 16 inches (405 mm) minimum and 18 inches (455 mm) maximum from the water closet centerline.
1104.11.3.1.2.2.2 Clearance depth. Clearance around the water closet shall be 56 inches (1420 mm) minimum in depth, measured perpendicular from the rear wall.
1104.11.3.1.2.2.3 Increased clearance depth at forward approach. Where a forward approach is provided, the clearance shall be 66 inches (1675 mm) minimum in depth, measured perpendicular from the rear wall.
1104.11.3.1.2.2.4 Clearance overlap. A vanity or other obstruction 24 inches (610 mm) maximum in depth, measured perpendicular from the rear wall, shall be permitted to overlap the required clearance, provided the width of the remaining clearance at the water closet is 33 inches (840 mm) minimum.
1104.11.3.1.3 Bathing fixtures. Where provided, a bathtub shall comply with Section 1104.11.3.1.3.1 or 1104.11.3.1.3.2 and a shower compartment shall comply with Section 1104.11.3.1.3.3.
1104.11.3.1.3.1 Parallel approach bathtubs. A clearance 60 inches (1525 mm) minimum in length and 30 inches (760 mm) minimum in width shall be provided in front of bathtubs with a parallel approach. Lavatories complying with Section 606 shall be permitted in the clearance. A lavatory complying with Section 1104.11.3.1.1 shall be permitted at one end of the bathtub if a clearance 48 inches (1220 mm) minimum in length and 30 inches (760 mm) minimum in width is provided in front of the bathtub.
1104.11.3.1.3.2 Forward approach bathtubs. A clearance 60 inches (1525 mm) minimum in length and 48 inches (1220 mm) minimum in width shall be provided in front of bathtubs with a forward approach. A water closet and a lavatory shall be permitted in the clearance at one end of the bathtub.
1104.11.3.1.3.3 Shower compartment. If a shower compartment is the only bathing facility, the shower compartment shall have dimensions of 36 inches (915 mm) minimum in width and 36 inches (915 mm) minimum in depth. A clearance of 48 inches (1220 mm) minimum in length, measured perpendicular from the control wall, and 30 inches (760 mm) minimum in depth, measured from the face of the shower compartment, shall be provided.
Exceptions:
1. A shower compartment with dimensions of 30 inches (760 mm) minimum in depth and 44 inches (1120 mm) minimum in width shall be permitted.
2. A shower door assembly shall be permitted where the assembly can be removed without removal or replace ment of the surrounding walls and floor to which it is affixed.
1104.11.3.2 Option B. One of each type of fixture provided shall comply with Section 1104.11.3.2. These fixtures shall be in a single toilet/bathing area, such that travel between fixtures does not require travel through other parts of the unit.
1104.11.3.2.1 Lavatory. Lavatories shall comply with Sections 1104.11.3.1.1 and 1104.11.3.2.1.1.
1104.11.3.2.1.1 Height. The front of the lavatory shall be 34 inches (865 mm) maximum above the floor, measured to the higher of the rim or counter surface.
1104.11.3.2.2 Water closet. The water closet shall comply with Section 1104.11.3.1.2.
1104.11.3.2.3 Bathing fixtures. The bathing fixture shall be a bathtub complying with Section 1104.11.3.2.3.1 or a shower compartment complying with Section 1104.11.3.2.3.2.
1104.11.3.2.3.1 Bathtub. A clearance 48 inches (1220 mm) minimum in length measured perpendicular from the control end of the bathtub, and 30 inches (760 mm) minimum in width shall be provided in front of bathtubs.

1104.11.3.2.3.2 Shower compartment. A shower compartment shall comply with Section 1104.11.3.1.3.3.
1104.12 Kitchens. Kitchens shall comply with Section 1104.12.
1104.12.1 Clearance. Clearance complying with Section 1104.12.1 shall be provided.
1104.12.1.1 Minimum clearance. Clearance between all opposing base cabinets, countertops, appliances, or walls within kitchen work areas shall be 40 inches (1015 mm) minimum.
1104.12.1.2 U-shaped kitchens. In kitchens with counters, appliances or cabinets on three contiguous sides, clearance between all opposing base cabinets, countertops, appliances, or walls within kitchen work areas shall be 60 inches (1525 mm) minimum.
Exception: U-shaped kitchens with an island complying with Section 1104.12.1.1.
1104.12.2 Clear floor space. Clear floor spaces at appliances shall comply with Sections 1104.12.2 and 1104.1.1.
1104.12.2.1 Sink. A clear floor space, positioned for a parallel approach to the sink, shall be provided. The clear floor space shall be centered on the sink bowl.
Exception: A sink with a forward approach complying with Section 1103.12.4.1.
1104.12.2.2 Dishwasher. A clear floor space, positioned for a parallel or forward approach to the dish washer, shall be provided. The dishwasher door in the open position shall not obstruct the clear floor space for the dishwasher.
1104.12.2.3 Cooktop. Cooktops shall comply with Section 1104.12.2.3.
1104.12.2.3.1 Approach. A clear floor space, positioned for a parallel or forward approach to the cooktop, shall be provided.
1104.12.2.3.2 Forward approach. Where the clear floor space is positioned for a forward approach, knee and toe clearance complying with Section 306 shall be provided. The underside of the cooktop shall be insulated or otherwise configured to prevent burns, abrasions, or electrical shock.
1104.12.2.3.3 Parallel approach. Where the clear floor space is positioned for a parallel approach, the clear floor space shall be centered on the appliance.
1104.12.2.4 Oven. A clear floor space, positioned for a parallel or forward approach adjacent to the oven shall be provided. The oven door in the open position shall not obstruct the clear floor space for the oven.
1104.12.2.5 Refrigerator/freezer. The refrigerator/ freezer shall comply with Section 1104.12.2.5.
1104.12.2.5.1 Approach. A clear floor space positioned for a parallel or forward approach to the refrigerator/freezer shall be provided.
1104.12.2.5.2 Forward approach. Where the clear floor space is positioned for a forward approach, the centerline of the clear floor space shall be offset 15 inches (380 mm) maximum from the centerline of the appliance.
1104.12.2.5.3 Parallel approach. Where the clear floor space is positioned for a parallel approach, the centerline of the clear floor space shall be offset 24 inches (610 mm) maximum from the centerline of the appliance.
1104.12.2.6 Trash compactor. A clear floor space, positioned for a parallel or forward approach to the trash compactor, shall be provided.

**NOTES:**

Italic text represent provisions designed into the architectural drawings.

Standard text are specifications for accessibility to be coordinated by the general contractor where applicable which effect fixture and finish selections not made by the architect.

**ADDITIONAL NOTES:**

-ICC/ANSI-2017 is an acceptable "Safe Harbor" for compliance with the Federal Fair Housing Act of 1991. Note: Inconsistencies are noted when FHA is more stringent.

-Sliding Glass doors must meet 31 3/4" clear wide opening for Type 'B' units and 32" clear wide opening for type 'A' units.
NOTE: Many 6'-0" wide sliders do not meet clear width requirements. Suggested manufacturer below:
Provide: Superseal Window and Door Company (or equal)
1-888-639-8569
Silverline Windows (1-800-234-4228)
Vinyl slider 950 series w/ optional 32" clear opening door
DP rating 45.

-Project was designed to have Type 'B' - Option 'A' baths, unless otherwise noted.
Where unit contains an option 'B' bath, all other baths and powder rooms must contain: ***(Per FHA)***
Usable doors per 1004.5
Provided on an accessible route per 1004.3
Light switches, electrical outlets, and other environmental controls in in accessible locations per section 1004.9
Blocking for grab bars @ toilet and bathing fixtures shall be provided.

-Type 'A' units require operable parts of all appliances to be within reach ranges. (Requirement 1003.13)
* For kitchen range hoods provide a wall switch to operate in accessible location.

-Type 'A' units - One window in each living space and bedroom must be accessible.
* See plans for designated windows
* If space has a door to exterior, window not required to be accessible.

* All blocking shall be 2x lumber or provide architects with alternative methods for approval.

* All bathroom vanities cabinets are 21" deep with 22" deep countertops.

ALL REPORTS, PLANS, SPECIFICATIONS AND COMPUTER FILES RELATING TO THIS PROJECT ARE THE PROPERTY OF THE MARTIN ARCHITECTURAL GROUP. THE MARTIN ARCHITECTURAL GROUP RETAINS ALL COMMON LAW, STATUTE AND OTHER RESERVED RIGHTS INCLUDING THE COPYRIGHT THERETO. REPRODUCTION OF THE MATERIAL HEREIN OR SUBSTANTIAL USE WITHOUT WRITTEN PERMISSION OF THE MARTIN ARCHITECTURAL GROUP VIOLATES THE COPYRIGHT LAWS OF THE UNITED STATES AND WILL BE SUBJECT TO LEGAL PROSECUTION.
©2022, The Martin Architectural Group, P.C.

REGISTERED ARCHITECT PENNSYLVANIA DREW ROMANIC No. RA407676

THE MARTIN ARCHITECTURAL GROUP, P.C.
ARCHITECTS AND LAND PLANNERS
A PROFESSIONAL CORPORATION
240 NORTH 22ND STREET, PHILADELPHIA, PA, 19103
P (215) 665-1080 F (215) 561-5064

| | |
|---|---|
| P.A.: | DREW ROMANIC |
| P.M.: | JASON DECAMPLI |
| DRAWN BY: | Author |
| PROJECT NO: | 1362-12 |

| NO. | REVISION | DATE |
|---|---|---|
| 1 | PERMIT SET | 12/20/22 |

ACCESSIBILITY INFORMATION
**Granite Run Apartment 02**
MIDDLETOWN TOWNSHIP, PA

| | |
|---|---|
| SCALE: | |
| DATE: | 11/14/22 |

# A10.04

©2022, The Martin Architectural Group, P.C.

Printed: 1/13/2023 4:53:44 PM

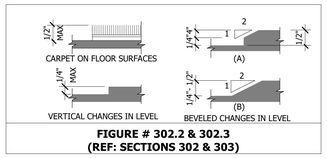


**FIGURE # 302.2 & 302.3**
**(REF: SECTIONS 302 & 303)**

## 1 FIGURE # 302.2 & 302.3
**SCALE : 6" = 1'-0"**

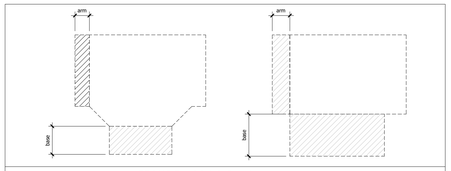


**FIGURE #304.3.2.1.1**
**(REF: SECTION 304)**

## 2 FIGURE # 304.3.2.1.1
**SCALE : 1/4" = 1'-0"**

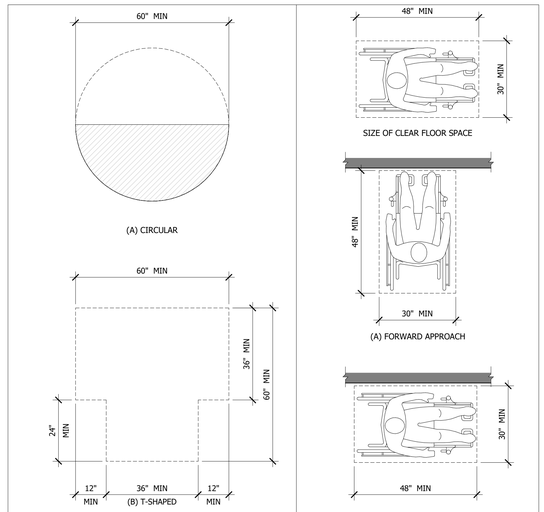


**FIGURE #304**
**(REF: SECTION 304)**

**FIGURE # 305**
**(REF: SECTION 305)**

## 3 FIGURE # 304 & 305
**SCALE : 1/2" = 1'-0"**

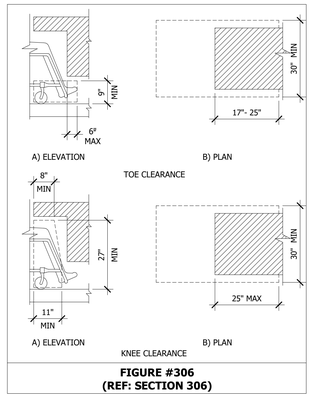


**FIGURE #306**
**(REF: SECTION 306)**

## 4 FIGURE # 306
**SCALE : 1/2" = 1'-0"**

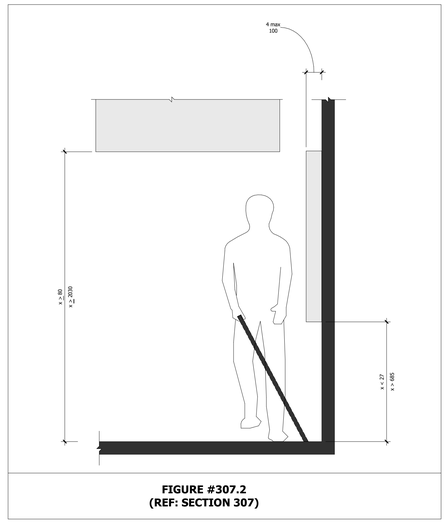


**FIGURE #307.2**
**(REF: SECTION 307)**

## 5 FIGURE # 307.2
**SCALE : 1/2" = 1'-0"**

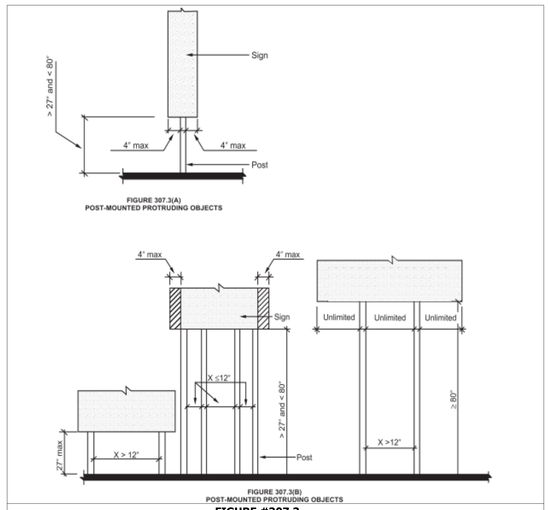


**FIGURE #307.3**
**(REF: SECTION 307)**

## 6 FIGURE # 307.3
**SCALE : 1/4" = 1'-0"**

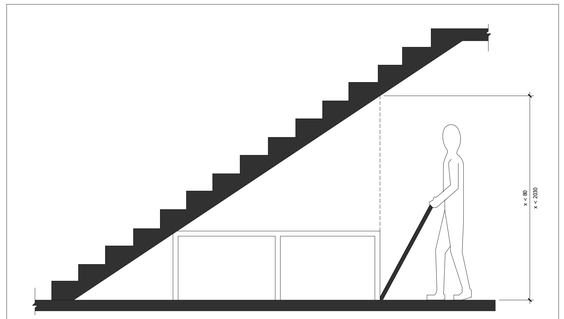
≤ 13
≥ 1525
≤ 305
≥ 1525
≤ 305
≥ 1525
≤ 305
≥ 1525
≤ 305
≤ 635

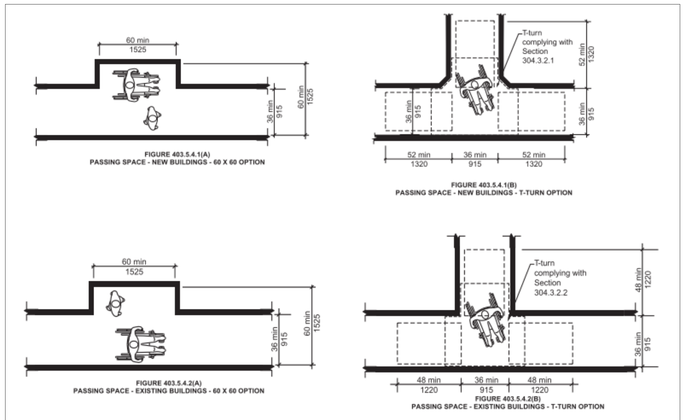


**FIGURE #403.5.4**
**(REF: SECTION 403)**

## 1 FIGURE # 403.5.4
**SCALE : 1/4" = 1'-0"**

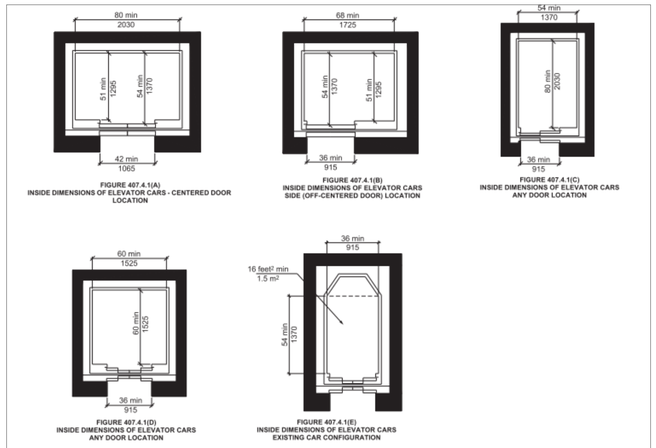


**FIGURE #407.4.1**
**(REF: SECTION 407)**

## 4 FIGURE # 407.4.1
**SCALE : 1/4" = 1'-0"**

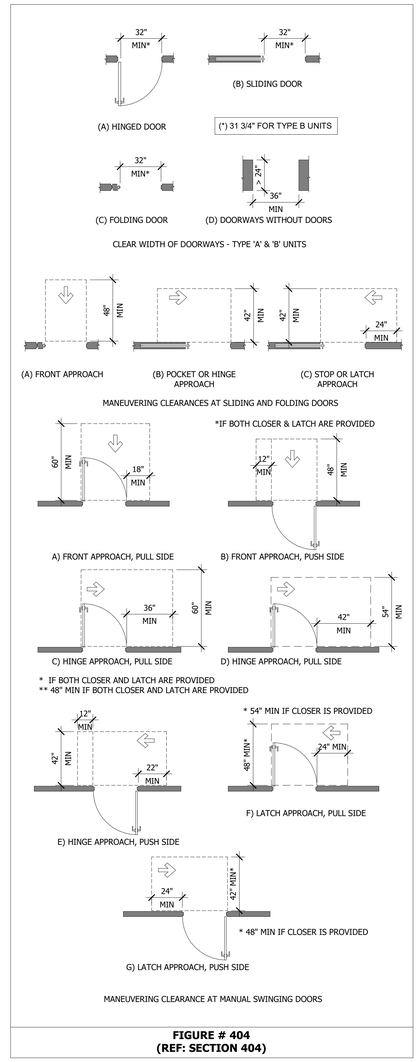


**FIGURE # 404**
**(REF: SECTION 404)**

## 2 FIGURE # 404
**SCALE : 1/4" = 1'-0"**

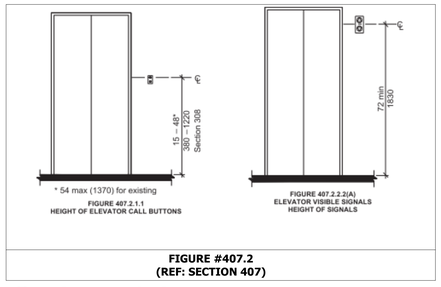


**FIGURE #407.2**
**(REF: SECTION 407)**

## 3 FIGURE # 407.2
**SCALE : 1/4" = 1'-0"**

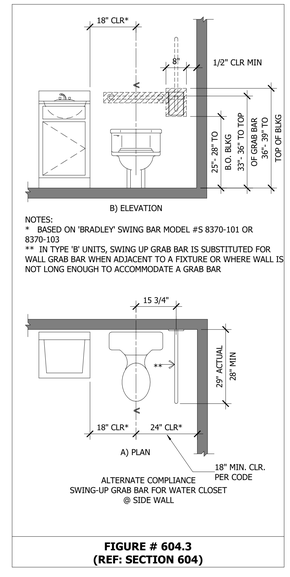


**FIGURE # 604.3**
**(REF: SECTION 604)**

## 6 FIGURE # 604.3
**SCALE : 1/2" = 1'-0"**

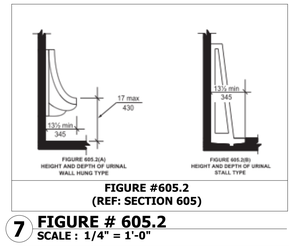


**FIGURE #605.2**
**(REF: SECTION 605)**

## 7 FIGURE # 605.2
**SCALE : 1/4" = 1'-0"**

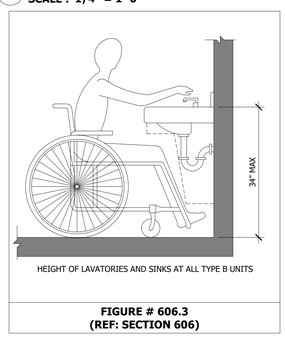


HEIGHT OF LAVATORIES AND SINKS AT ALL TYPE B UNITS

**FIGURE # 606.3**
**(REF: SECTION 606)**

## 8 FIGURE # 606.3
**SCALE : 3/4" = 1'-0"**

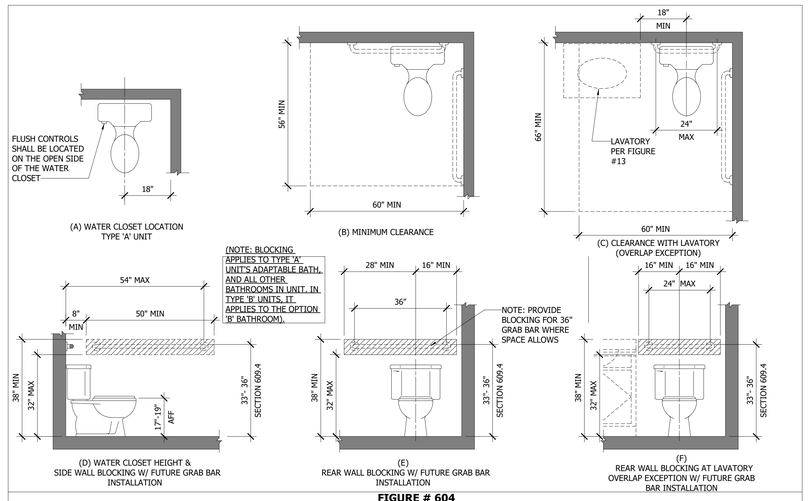


**FIGURE # 604**
**(REF: SECTION 604)**

## 5 FIGURE # 604
**SCALE : 1/2" = 1'-0"**

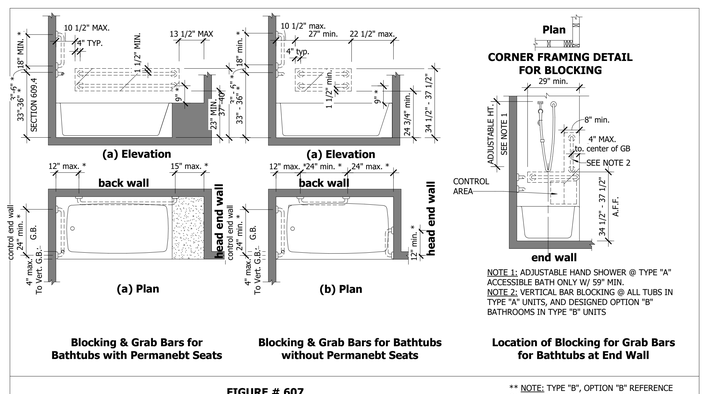


**Blocking & Grab Bars for Bathtubs with Permanebt Seats**

**Blocking & Grab Bars for Bathtubs without Permanebt Seats**

**Location of Blocking for Grab Bars for Bathtubs at End Wall**

**FIGURE # 607**
**(REF: SECTIONS 607)**

** NOTE: TYPE "B", OPTION "B" REFERENCE ONLY BLOCKING (CONTROL LOCATIONS AND HAND SHOWER FOR TYPE "A" UNIT ONLY)

## 9 FIGURE # 607
**SCALE : 1/4" = 1'-0"**

ALL REPORTS, PLANS, SPECIFICATIONS AND COMPUTER FILES RELATING TO THIS PROJECT ARE THE PROPERTY OF THE MARTIN ARCHITECTURAL GROUP. THE MARTIN ARCHITECTURAL GROUP RETAINS ALL COMMON LAW, STATUTE AND OTHER RESERVED RIGHTS INCLUDING THE COPY-RIGHT THERETO. REPRODUCTION OF THE MATERIAL HEREIN OR SUBSTANTIAL USE WITHOUT WRITTEN PERMISSION OF THE MARTIN ARCHITECTURAL GROUP VIOLATES THE COPYRIGHT LAWS OF THE UNITED STATES AND WILL BE SUBJECT TO LEGAL PROSECUTION.
©2022, The Martin Architectural Group, P.C.

NIC

REGISTERED ARCHITECT COMMONWEALTH OF PENNSYLVANIA JASON M. DECAMPLI ROMANIC No. RA009078

Professi
I hereby prepare this doc laws of

Professi License Expirati

THE MARTIN ARCHITECTURAL GROUP, P.C.
ARCHITECTS AND LAND PLANNERS
A PROFESSIONAL CORPORATION
240 NORTH 22ND STREET, PHILADELPHIA, PA, 19103
P (215) 665-1080 F (215) 561-5064

| | |
|---|---|
| P.A.: | DREW ROMANIC |
| P.M.: | JASON DECAMPLI |
| DRAWN BY: | MAG |
| PROJECT NO: | 1362-12 |

| NO. | REVISION | DATE |
|---|---|---|
| 1 | PERMIT SET | 12/30/22 |

ACCESSIBILITY INFORMATION

**Granite Run Apartment 02**

MIDDLETOWN TOWNSHIP, PA

SCALE: AS NOTED
DATE: 12/31/2017

**A10.06**

©2022, The Martin Architectural Group, P.C.

Printed: 1/13/2023 4:53:51 PM

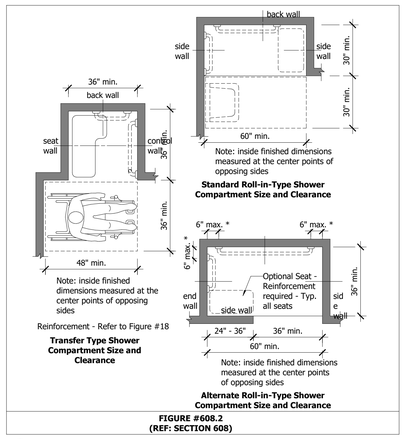


FIGURE #608.2
(REF: SECTION 608)

## 1 FIGURE # 608.2
**SCALE : 1/4" = 1'-0"**

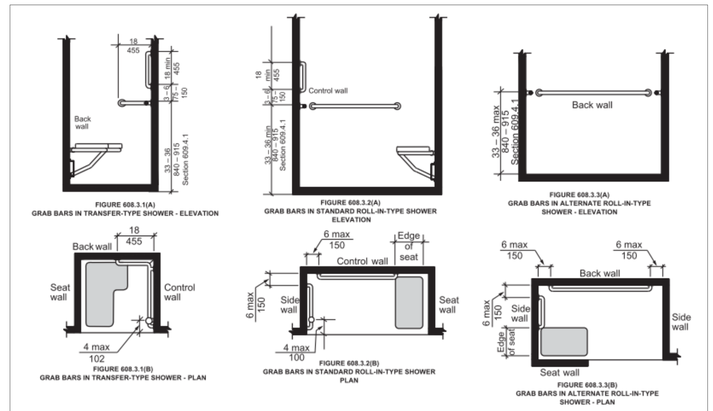


FIGURE #608.3
(REF: SECTION 608)

## 2 FIGURE # 608.3
**SCALE : 1/4" = 1'-0"**

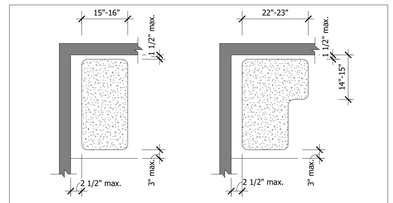


FIGURE #610.3
(REF: SECTION 610)

## 3 FIGURE # 610.3
**SCALE : 3/8" = 1'-0"**

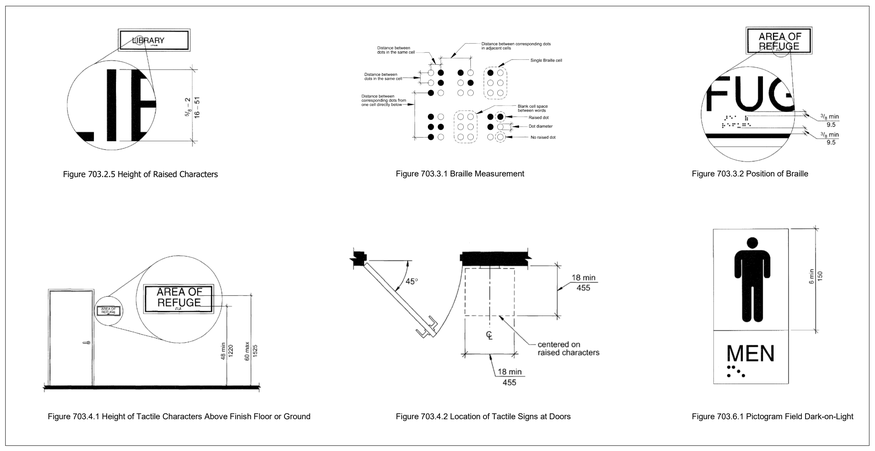


## 4 FIGURE # 703
**SCALE : 1" = 1'-0"**

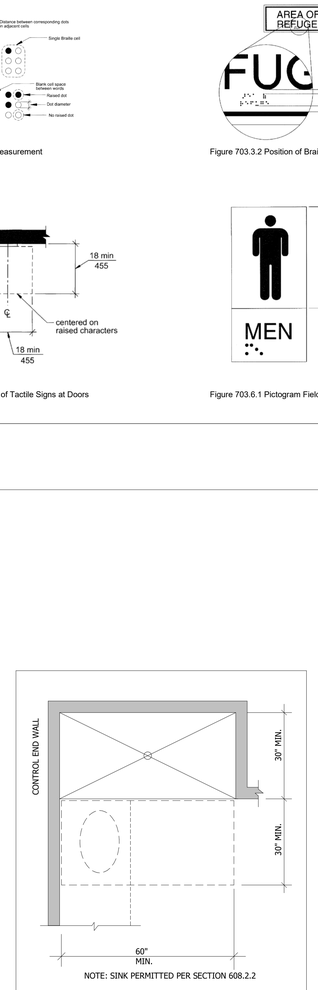


FIGURE #1103.11.2.5.2
STANDARD ROLL-IN-TYPE SHOWER
COMPARTMENT IN TYPE A UNITS

## 6 FIGURE # 1103.11.2.5.2
**SCALE : 3/8" = 1'-0"**

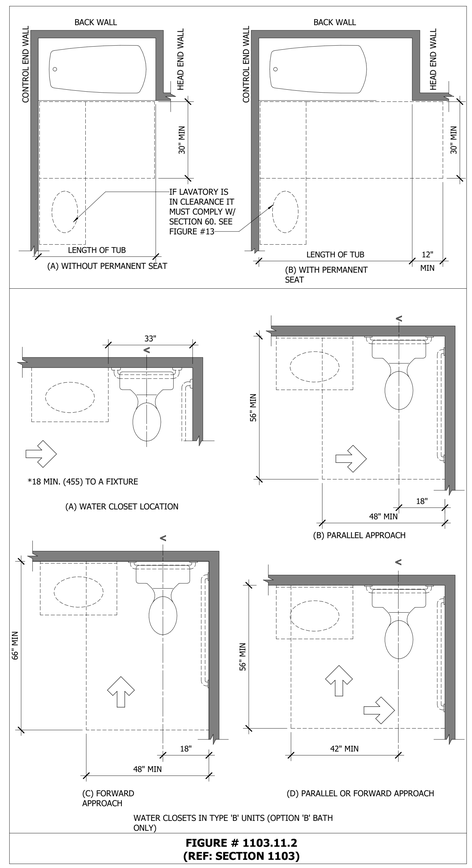


WATER CLOSETS IN TYPE 'B' UNITS (OPTION 'B' BATH ONLY)

FIGURE # 1103.11.2
(REF: SECTION 1103)

## 5 FIGURE # 1103.11.2
**SCALE : 1/2" = 1'-0"**

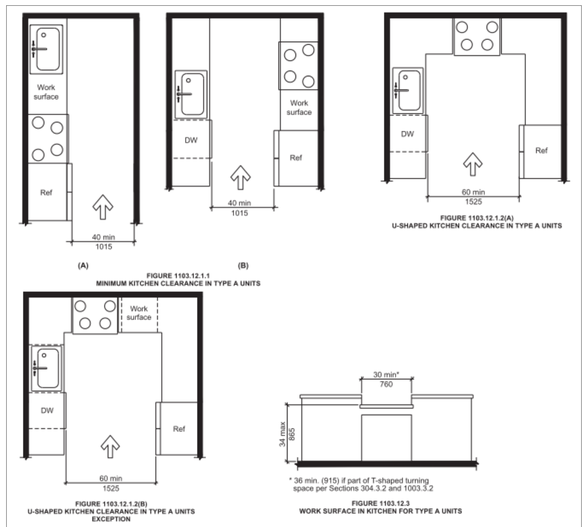


FIGURE #1103.12
(REF: SECTION 1103)

## 7 FIGURE # 1103.12
**SCALE : 1/4" = 1'-0"**

ALL REPORTS, PLANS, SPECIFICATIONS AND COMPUTER FILES RELATING TO THIS PROJECT ARE THE PROPERTY OF THE MARTIN ARCHITECTURAL GROUP. THE MARTIN ARCHITECTURAL GROUP RETAINS ALL COMMON LAW, STATUTE AND OTHER RESERVED RIGHTS INCLUDING THE COPY-RIGHT THERETO. REPRODUCTION OF THE MATERIAL HEREIN OR SUBSTANTIAL USE WITHOUT WRITTEN PERMISSION OF THE MARTIN ARCHITECTURAL GROUP VIOLATES THE COPYRIGHT LAWS OF THE UNITED STATES AND WILL BE SUBJECT TO LEGAL PROSECUTION.
©2022, The Martin Architectural Group, P.C.

NIC

REGISTERED ARCHITECT COMMONWEALTH OF PENNSYLVANIA DREW ROMANIC No. RA-020015

Professi
I hereby prepare under the laws of
Professi License Expirati

THE MARTIN ARCHITECTURAL GROUP, P.C.
ARCHITECTS AND LAND PLANNERS
A PROFESSIONAL CORPORATION
240 NORTH 22ND STREET, PHILADELPHIA, PA, 19103
P (215) 665-1600 F (215) 561-5064

| | |
|---|---|
| P.A.: | DREW ROMANIC |
| P.M.: | JASON DECAMPLI |
| DRAWN BY: | Author |
| PROJECT NO: | 1362-12 |

| NO. | REVISION | DATE |
|---|---|---|
| 1 | PERMIT SET | 12/20/22 |

ACCESSIBILITY INFORMATION
**Granite Run Apartment 02**
MIDDLETOWN TOWNSHIP, PA

SCALE:
DATE: 11/21/22

**A10.07**

©2022, The Martin Architectural Group, P.C.

Printed: 1/13/2023 4:53:54 PM